Private Fuel Storage, LLC

Final
Safety Analysis Report

License # SNM 2513

Book 2 of 2

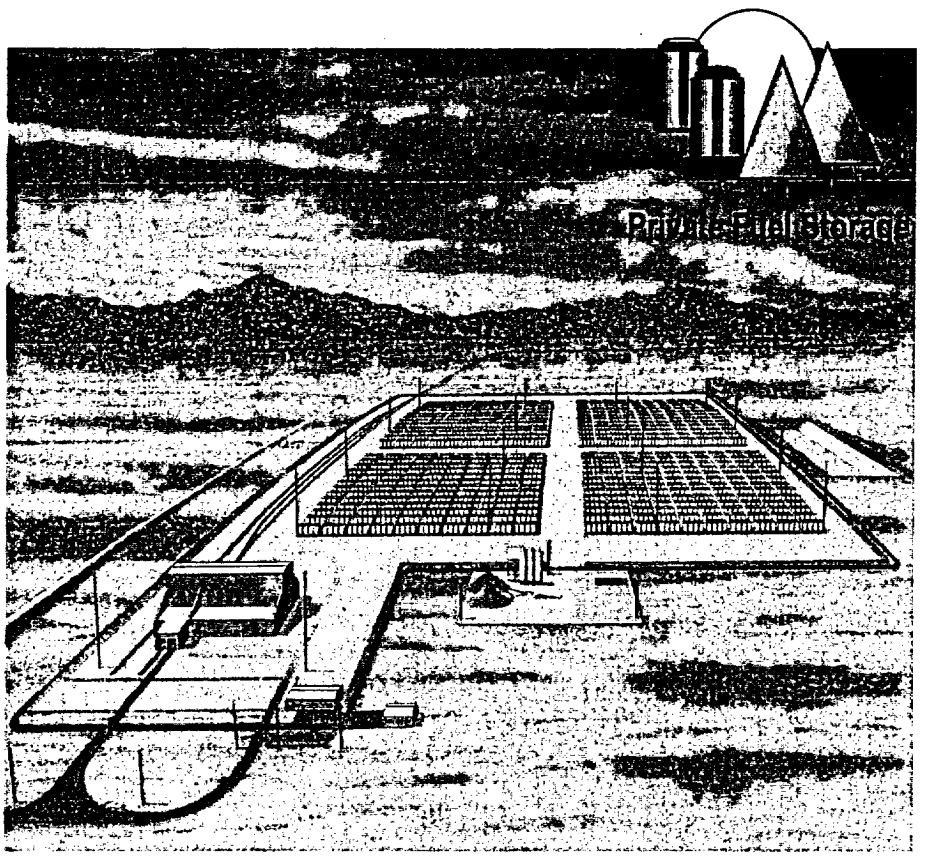

APPENDIX 2B

SEISMIC SURVEY OF THE PRIVATE FUEL STORAGE FACILITY

SEISMIC SURVEY

OF THE

PRIVATE FUEL STORAGE FACILITY

Skull Valley, Utah

for

Stone & Webster Engineering Corporation

February 1997

GEOSPHERE MIDWEST

Midland, Michigan

SWEC #0599601-009
GSM #96-538

SEISMIC SURVEY

OF THE

PRIVATE FUEL STORAGE FACILITY

Skull Valley, Utah

Prepared for

Stone & Webster Engineering Corporation

Prepared by	Robert A. Glaccum	**Date**	2/28/97
Reviewed by	Matthew B. Glaccum	**Date**	2/28/97
Independent Review by	(Geomatrix, Inc.) (see separate letter)	**Date**	

QA Category I / III

GEOSPHERE MIDWEST
Midland, Michigan

100 Pine Street, 10th Floor
San Francisco, CA 94111
(415) 434-9400 • FAX (415) 434-1365

GEOMATRIX

March 12, 1997
Project 3801

Mr. John Donnell
Stone & Webster Engineering Corporation
7677 E. Berry Avenue
Engelwood, CO 80111-2137

Subject: Confirmation of Satisfactory Revision of
"Seismic Survey of the Private Fuel Storage Facility, Skull Valley, Utah"
by Geosphere Midwest, February, 1997, Final Report #96-538 SWEC#0599601-009

Dear John:

We have reviewed the subject Final Report by Geosphere Midwest relative to the comments and questions that we raised in our review of their Draft Report (see our review dated February 20). This letter verifies that the Final Report satisfactorily addresses our comments and questions.

If you have any questions, please feel free to give me a call.

Sincerely,

Kevin J. Coppersmith
Project Manager

I:\PA\3801\RV-CNFRM.DOC

KJC\nji

cc: William Lettis
William Lettis & Associates
777 Botelho Drive, Suite 262
Walnut Creek, CA 94596

TABLE OF CONTENTS

List of Figures iii

1 INTRODUCTION 1
1.1 LOCATION AND DESCRIPTION 1
1.2 PURPOSE 1

2 GEOPHYSICAL METHODS 4
2.1 GENERAL DESCRIPTION 4
2.2 SEISMIC TECHNIQUES 4
2.2.1 EQUIPMENT 5
2.3 QUALITY CONTROL 6

3 DATA ACQUISITION 7
3.1 SURVEY LINES AND COVERAGE 7
3.1.1 LINE LAYOUT AND PROFILE POSITIONS 7
3.2 SEISMIC REFRACTION SURVEY 7
3.2.1 DATA ACQUISITION 7
3.3 SEISMIC REFLECTION SURVEY 8
3.3.1 DATA ACQUISITION 8

4 SEISMIC RESULTS AND INTERPRETATION 10
4.1 REFRACTION RESULTS 10
4.1.1 LINE 1 10
4.1.2 LINE 2 11
4.1.3 LINE 3 12
4.2 REFLECTION RESULTS 13
4.2.1 LINE 2 13
4.2.2 LINE 3 14

5 SUMMARY OF SEISMIC RESULTS 22
5.1 OVERBURDEN SOIL/SEDIMENT LAYERS 22
5.2 BEDROCK CONDITIONS 22

APPENDICES 23

APPENDIX A A-1

APPENDIX B B-1

APPENDIX C C-1

List of Figures

Figure		Page
1.1	Site location map	2
1.2	Detailed site map with seismic line locations	3
4.1	P-wave refraction line 1	15
4.2	S-wave refraction line 1	16
4.3	P-wave refraction line 2	17
4.4	S-wave refraction line 2	18
4.5	P-wave refraction line 3	19
4.6	Reflection line 2	20
4.7	Reflection line 3	21

1 INTRODUCTION

1.1 LOCATION AND DESCRIPTION

The Private Fuel Storage Facility (PFSF) site is located in the southeast portion of Skull Valley, about 60 miles southwest of the city of Salt Lake City and directly south of the Great Salt Lake in northwestern Utah. Oriented in a north-south direction, Skull Valley is part of the basin and range province. The PFSF site lies some 25 miles south of the Lake from Interstate 80 and is situated about 2 miles west of Skull Valley Road which runs down the east side of the valley (Figure 1.1). The site was accessed using a series of two-track roads through the desert brush.

The area consists of eroded former lake terraces and alluvial deposits situated between two north-south mountain ranges located east and west of the proposed storage facility. The site lies on alluvial/lake deposits in a relatively flat topographic setting; elevations vary from 4450 to 4500 feet over the site and access road easement where the survey was conducted. A bedrock hill called Hickman Knolls protrudes through the alluvial sediments about 2 miles south of the storage area; it rises some 350 feet above the surrounding desert. Drainage in the vicinity of the site is towards the west and north into small drying basins and ephemeral stream beds (Figure 1.2) that extend to the Salt Lake.

Previous drilling information shows that subsurface soils are composed predominantly of silt, sand and clay deposits with occasional gravel constituents. The deepest (two) boreholes did not encounter bedrock or the water table to a depth of 100 feet.

1.2 PURPOSE

As part of an overall assessment study of the PFSF site as an interim spent fuel storage site, Stone & Webster Engineering Corporation (SWEC) required an investigation of subsurface conditions including soil conditions, depth to water table, and topography and character of the underlying bedrock. Such information will assist them in the design of appropriate foundations and structures for the stored materials.

Geosphere was contracted to conduct seismic geophysical surveys along two perpendicular lines across the proposed storage site and one traverse line southeast of the site along a proposed easement towards Skull Valley Road. Primary (P) wave and shear (S) wave refraction data were requested on two lines over the center of the storage area; only P-wave data were requested in the easement area. Deeper reflection information was required over the second and third refraction lines. The field work was completed between 9 and 20 December 1996.

FIgure Withheld Under 10 CFR 2.390

PFSF SITE, SKULL VALLEY, UTAH

SITE LOCATION MAP

FIGURE 1.1

Figure Withheld Under 10 CFR 2.390

DETAILED SITE MAP WITH SEISMIC LINE LOCATIONS
PFSF SITE, SKULL VALLEY, UTAH

GEOSPHERE MIDWEST

FIGURE 1.2

2 GEOPHYSICAL METHODS

2.1 GENERAL DESCRIPTION

Two seismic geophysical methods were used at the PFSF site:

1) Seismic Refraction Profiling for both P-wave and S-wave data
2) Seismic Reflection Profiling.

Descriptions for both seismic methods are given below as they apply to the site. Although all seismic data contain both refraction and reflection events, differences between the two methods occur during (field) data collection and processing of results. In this report, the term "seismic velocity" is in reference to compressional or primary (or P-wave) seismic velocity through soil and rock layers; seismic velocities are given in units of feet per second (ft/sec). The term "S-velocity" is used for shear wave seismic velocities, also given in ft/sec.

2.2 SEISMIC TECHNIQUES

Seismic refraction was employed to detect subsurface soil and sediment layers. By determining seismic velocities in these layers, lateral variability within each layer could be assessed and provide input for calculating the engineering properties of these layers. The refraction data could also provide depth to water table and bedrock if they were sufficiently shallow. (The depths of water and rock were not known at the onset of the survey). Refraction results were processed using the Generalized Reciprocal Method (GRM) of analysis, that provides much greater detail of subsurface conditions than the older plane methods of forward/reverse refraction.

The Common Depth Point (CDP) method was employed as the seismic reflection technique to detect and map the surface of the underlying bedrock in the depth range of 300 to over 1000 feet. Similar in principle to reflection techniques used by the petroleum industry, field methods employed at the PFSF site were designed to provide higher resolution of reflectors. This included high frequency geophones, a state-of-the-art seismograph, low-cut filters, and special software designed for shallow reflection data.

Seismic methods are used to measure the depth and thickness of geologic strata using acoustic (sound) waves transmitted into the ground. These waves, generated from a controlled source, travel in different directions and velocities through various soil and rock layers. During this travel, these waves are refracted and reflected from various interfaces in the subsurface. The time required for the wave to traverse this path through these layers and return to the surface permits calculation of layer depth and velocity (Appendix A). Reflections and refractions are most often received from significant interfaces in the subsurface between clay, sand, gravel, top of water, top of bedrock, and intra-bedrock layers.

Primary and shear seismic waves move through subsurface geologic layers in response to layer physical properties (acoustic impedance), layer thickness, and layer sequence. A significant change in any one of these parameters will cause a notable shift in the seismic wave's velocity and path of

travel. Layer density and elastic properties primarily determine the velocity at which the acoustic energy will travel through the layer; these properties are determined largely by the more recognizable attributes of water content, compaction, porosity, and mineral composition.

Reflection and the new (GRM) refraction methods require extensive computer processing. Processing utilizes the time of wave arrivals occurring from subsurface reflections and the geometry of the wave path. Different methods have been developed using reflections in deriving layer depth and average velocities of the geologic section. Typically, the CDP methods are limited to discerning layers at minimum depths of 50-250 feet, dependent on near-surface seismic velocities, the depth to water table and frequencies transmitted by the soil or rock. Using geophone spacings of 2-5 feet, specialized field methods may permit acquisition of data as shallow as 10-20 feet with the CDP method. GRM refraction can be used to determine layer depths of less than 5 feet to over 200 feet and variations of the clay or rock interface along the line. Unlike reflection methods, refraction spreads need to cover greater lateral distances to detect and map deeper interfaces. Refraction data are based on "picks" of the first primary seismic wave arrival times for each geophone in the array; reflection results are derived from coherent wavelet events farther down in the seismic trace. Most seismic surveys measure P-wave first arrivals and reflections; S-wave work employs a special seismic source and geophones to generate and receive transverse waves through the ground.

A seismograph is used to process and display seismic wave arrivals from a geophone array. The seismic energy source may be a hammer striking a metal plate, explosives, shotgun device or a drop weight. Deep reflected wave energies are usually stronger signals than most refraction arrivals, even though the reflecting layer may be several hundred or thousand feet in depth.

The vertical resolution and minimum usable depth of both methods are dependent on several factors:

1) Frequency transmitted by the subsurface (often a function of grain size and depth to water table)
2) Seismic velocities of surface soils/sediments
3) Frequency characteristics of geophones
4) Filter capabilities of seismograph
5) Resolution capabilities of seismograph.

Higher seismic frequencies will permit better resolution of subsurface layers as well as detection of shallower layers. Different ground conditions will transmit different frequencies (ranging from less than 1 to over 500 Hz) with various attenuation. Acoustic frequencies of 30 to 150 Hz are often obtained in reflection surveys and will provide good results. Subsurface transmittal of frequencies of 100 Hz or better are less common or very rare in some areas, but, if obtained, will provide excellent resolution results. Lower frequency filters are usually set in refraction studies to permit reception of greater amounts of the refraction energy (signal). The lower frequencies (4-16 hertz) travel better than higher frequencies within geologic materials.

2.2.1 EQUIPMENT

The seismic data were collected with a 24 channel Bison 9024 seismograph with digital floating point gain control. The system was coupled to an Input/Output Instrument 120 channel roll switch which permitted sequential collection of 24 channel data from a 48 geophone array per spread. A

modified Bison Elastic Wave Generator (EWG-5) was employed as a seismic energy source. Hydraulically lifted to a height of approximately 2.5 feet, the 1,500 pound weight of the EWG-5 is accelerated by four 6-inch elastic bands as it is released towards a (40x40-inch) steel plate on the ground to generate P-wave energy. The steel plate is employed to generate a "sharper" seismic signal than that obtainable on normal, uncompacted surfaces in order to obtain higher frequency values and, consequently, better resolution. To generate shear wave energy, two special 150 pound transverse hammers are mounted on the left and right sides of the EWG-5's frame. These hammers strike the ends of a 4-foot long, 6x7-inch wooden beam that has been pressed into the ground surface by 6,000 pounds of weight (from the EWG-5 trailer) and secured with steel spikes. Signals are stacked from the two hammers in such a manner to accentuate S-waves and cancel P-waves. An electronic switch mounted on the EWG provided the trigger signal via cable to the seismograph. Thirty hertz (low-cut) Mark Product geophones were used with a 32 hertz low-cut filter (set in the seismograph) for reflection data and 16 hertz low-cut for refraction data. The collected data were stored within the seismograph and downloaded each evening to a computer for processing.

2.3 QUALITY CONTROL

A quality assurance survey was conducted at Geosphere Midwest's facility by SWEC on 5 December 1996. The inspector was G. Sauter from SWEC's Denver Office. The objective of the surveillance was to verify that Geosphere Midwest controls those items determined to be critical as documented in Commercial Grade Application Evaluation number PI-0199, Rev 0. The surveillance also included a visit by Northern States Power auditor T. Iseman to witness and audit the seismic field work in progress at the PFSF site in Utah.

The surveillance documented that Geosphere Midwest controls critical characteristics:

1) Geosphere has qualified personnel to take, read, and interpret seismic readings. Three individuals who conducted the survey have a total of 41 man-years of geophysical experience with seismic methods.
2) Calibrated measuring equipment was identified, controlled and traceable to recognized national standard. The Bison 9024 seismograph was the only calibrated instrument used. The seismograph was returned to Bison Instruments for evaluation prior to and following the work for SWEC. Bison certified that the instrument performed to specifications on both occasions.
3) Qualified software was used to record, process and output the seismic data. This software included "Eavesdropper," written and sold by the Kansas Geological Survey (KGS) and Firstpix/Gremix software from Interpex of Golden, Colorado. Software was validated by processing known data sets and comparing the results with previously documented results. Results from PFSF were compared to actual drilling logs obtained near the seismic lines for validation of the shallow seismic results. Deeper bedrock depth results (over 100 feet) are based on calculations from seismic stacking velocities, as no drilling data were available to these depths.
4) Geosphere has written procedures and instructions to direct work activities. These include "Field Procedures, Seismic Reflection Surveys" Revision 00, 10/13/95 and "Field Procedures, Seismic Refraction Surveys" Revision 00, 10/13/95.

3 DATA ACQUISITION

3.1 SURVEY LINES AND COVERAGE

Two seismic lines were run across the central portion of the site perpendicular to each other: Line 1 in a north-to-south direction and Line 2 in a west-to-east direction. A third seismic line (Line 3) was run in an area southeast of the proposed storage area, along the easement to Skull Valley Road. Line locations are given in Figure 1.2.

Both P- and S-wave data were obtained along Lines 1 and 2 for a distance of 2,400 feet each. In addition, reflection data were acquired along Line 2 for 2880 feet, centered on the 2,000x2000 foot site. P-wave refraction and reflection data were acquired along Line 3 for a distance of 2880 feet.

The ground surface along Line 1 was relatively flat whereas Line 2 cut across two dried stream beds at its eastern end. Line 1 has a 17 foot drop in elevation towards the north from elevation 4477 to 4460 feet; Line 2 has a slight concave shape with higher elevation (4470 feet) near the center of the line. The topography along Line 3 rises towards the east from an elevation of 4482 to 4497 feet; Line 3 cut across several linear (north-south) ridges believed to be old lake sand bars.

The reflection and refraction data were acquired during the period of 9 through 20 December 1996.

3.1.1 LINE LAYOUT AND PROFILE POSITIONS

During the field survey, shot points and geophone positions were keyed to a system of linear stations along each line. The lines were positioned to be centered relative to the approximate edges of the 2000x2000 foot site. Each station line was laid out using surveyor's tapes, wooden stakes and colored pin flags. Labeled wooden markers were placed at the beginning and end of each line for future reference. To simplify matters, our results and discussions below describe events and features in terms of our linear footage along each seismic line; however, each seismic figure has a lower scale that correlates Utah State Plane Coordinates with our Spread Distance station numbers.

3.2 SEISMIC REFRACTION SURVEY

3.2.1 DATA ACQUISITION

Refraction data for Lines 1 and 2 were acquired along a series of five 24 channel geophone arrays, using a geophone interval of 20 feet, for a total distance of 2,400 feet. Data for Line 3 were acquired along a series of six 24 channel geophone arrays, using a geophone interval of 20 feet, for a total distance of 2,880 feet. Each array of 24 geophones was connected to a 24 channel seismograph through a large 120 channel roll switch (Input/Output Instrument); this setup permitted selecting different groups of 24 phones using the roll switch as the seismic source was advanced to each refraction shot position (every 240 feet along the line). Where possible, two 24 channel records were combined from a common shot location to yield 48 channel data sets. The Bison EWG-5

seismic source was employed starting at near offset distances of 490, 250 and 10 feet from the first geophone of the first array. This pattern was repeated through the entire line; far offset (reverse) shots were also made back into the geophone arrays at the same 240 foot spacings, resulting in symmetrical forward and reverse data sets. Timing between the EWG and seismograph was established using a trigger switch on the source and a connecting cable to the seismograph.

After each shot, the 24 geophone signals (channels) were dumped onto a thermal paper record for viewing and quality control. Data were checked for signal strength, proper triggering and any unusual features. Dependent on ground conditions and surface (auditory and wind) noise, a number of multiple hits were made, causing the seismic signals to be stacked (added together) within the seismograph. After the operator determined that ample signal strength had been acquired through stacking (usually 15-30 times), the 24 channel record was saved into harddrive memory in the seismograph. Then, the EWG-5 source and roll switch were advanced for the next shot position (240 feet up the line).

Records saved in the seismograph were downloaded each evening to a computer for preliminary processing. GRM processing at the office included picking the first arrival times for each channel and entry of phone and source position geometries and elevation data. The processed refraction profiles consist of interpreted layers detected in the first pick data (Appendix B).

3.3 SEISMIC REFLECTION SURVEY

3.3.1 DATA ACQUISITION

The reflection data were acquired along Lines 2 and 3 as the refraction survey described above, (ie, a series of five and six 24-channel geophone arrays using a geophone interval of 20 feet). Each array of 24 active geophones was connected to the 24 channel seismograph through the 120 channel roll switch; this setup permitted the selection of 24 successive groups of 24 phones to be connected to the seismograph using the roll switch as the seismic source was advanced 20 feet per shot along the line. The Bison EWG-5 seismic source was employed at a constant offset distance of 490 feet from the first geophone of the array at each shot position. Timing between the EWG and seismograph was established using a trigger switch on the source and a connecting cable to the seismograph.

After each shot, the 24 geophone channels were dumped onto a paper record for viewing and quality control. Data were checked for signal strength, proper triggering, and any unusual features. Dependent on ground conditions and surface (auditory and wind) noise, a number of multiple hits were made using the EWG, causing the seismic signals to be stacked (added together) within the seismograph. After the operator determined that ample signal strength had been acquired through stacking (usually 15-25 times), the 24 channel record was saved into harddrive memory in the seismograph. Then, the EWG source and roll switch (connecting the next group of 24 phones) were advanced for the next shot position (20 feet up the line).

Records saved in the seismograph were downloaded each evening to a computer for processing and preliminary analysis. CDP processing of the field seismic records included filtering, muting, sorting, deconvolution, velocity analysis, normal moveout (NMO) correction, statics, stacking, and gain

correction. The processed reflection profiles consist of individual wiggle traces that represent CDP gathers of 12 traces each, yielding a 12 fold data set. During processing, the seismic results were corrected using elevations taken from a detailed map of the site; an elevation datum of 4460 feet was used to normalize all profile results.

4 SEISMIC RESULTS AND INTERPRETATION

The seismic results and interpretation are described below for each of the three survey lines. P- and S-wave refraction results for Line 1 are given in Figures 4.1 and 4.2; corresponding results for Line 2 are given in Figures 4.3 and 4.4. Line 3 P-wave results are presented in Figure 4.5. Deep bedrock reflection sections are given in Figure 4.6 for Line 2 and Figure 4.7 for Line 3. Each figure includes the Spread Station Distance as the x-axis with a corresponding Utah State Plane Coordinate axis below. The refraction figures include an elevation scale (in feet above sea level) on the left and right sides; the reflection figures provide a reflection time scale on the left and an approximate depth scale on the right side of the reflection record. Elevations are given in feet above mean sea level (MSL). The reflection profiles have been normalized to an elevation datum of 4460 feet above MSL.

Interpretation of the **P-wave refraction** profile data shows:

1) three layers and their associated seismic velocities to a depth of about 120 feet:
   a) a near surface low velocity layer (dry soil)
   b) an unsaturated sediment layer and
   c) an interpreted saturated layer
2) that the water table (top of the interpreted saturated layer) is not flat
3) that the top of bedrock is greater than 120 feet deep
4) that no evidence exists for faulting or movement within the alluvium section.

Interpretation of the **S-wave refraction** profile data shows:

1) two layers and their associated seismic velocities to a depth of about 60 feet:
   a) a near surface low velocity layer (dry soil) and
   b) an unsaturated sediment layer
2) that the water table and bedrock were not encountered.

Interpretation of the **reflection** section data shows:

1) an irregular bedrock surface that dips towards the east in both Lines 2 and 3
2) Line 2 bedrock depths of 520 to 880 feet and Line 3 bedrock depths of 740 to 1020 feet
3) distinctive lower layers within the bedrock
4) interpreted folded and faulted zones within the bedrock, but no evidence of faults extending up into the overburden.

4.1 REFRACTION RESULTS

4.1.1 LINE 1

P-wave refraction results for Line 1 (Figure 4.1) provide subsurface information from the ground surface to a depth of approximately 120 feet. Analysis of the first arrival picks reveals the presence of three seismic layers which correlate to a low-velocity layer, an unsaturated sediment layer and an interpreted saturated layer. A plot of the first arrival data for Line 1 is given in Figure B-1

(Appendix B). Seismic velocities characteristic of bedrock were not encountered. The low velocity soil layer is interpreted as an uncompacted, dry soil zone; it has an approximate thickness of 33 to 40 feet with seismic velocities ranging from 1,125 to 1,300 ft/sec. Due to the coarseness of the geophone spacing (20 feet), the thickness and velocity values for the first layer are probably within 20% of the stated value.

The second layer at a depth of about 35 feet is interpreted as a zone of unsaturated sediments; this layer is approximately 60 to 90 feet thick. Measured seismic velocities (2,725 to 3,475 ft/sec) are likely derived from more compacted sand and silt layers recorded in nearby drilling logs; due to the 20 foot geophone spacing, velocities are likely within 15% of the stated value. The bottom of this second layer is interpreted as the water table which ranges in depth from 103 to 131 feet (elevation 4334 to 4369), being higher near Spread Station 1500.

The third layer is believed to represent saturated sediments, occurring below the interpreted water table. This layer is likely composed of wet sand, silt, clay, and gravel lake and alluvial layers and lenses typical of the area. Seismic velocities range from about 5,200 to 5,900 ft/sec which are characteristic of water-saturated sand and silt sediments; velocity accuracy is estimated to lie within 10% of the stated value. An alternative interpretation is that the third layer is not saturated and represents a more compacted (or cemented) sequence of alluvial/lake sediments; such layers have been previously identified in Basin and Range surveys. The surface of the third layer has a concave shape, dipping both towards the north and south from a high between Stations 1200 and 1500. The unevenness of the third layer surface may be caused by capillary action in varying lenses of fine sand and clayey silt deposits or local artesian conditions. Another explanation may be that substantial vertical and lateral variations in seismic velocities exist in the alluvium, leading to apparent higher velocities and yielding greater thickness of Layer 2 at specific locations (see Appendix B). Thickness of the third layer extends beyond the depth limits of the refraction survey. A deeper layer having seismic velocities characteristic of bedrock was not detected nor was any evidence of faulting or movements within the upper alluvium section.

S-wave refraction results for Line 1 (Figure 4.2) show two seismic layers, a near-surface low velocity zone and a deeper unsaturated sediment zone. Due to very slow shear velocities, depth to the interpreted top of water (at about 110 feet) was beyond the limits of the survey; however, the shear results probably record seismic events to a maximum depth of about 80-90 feet. The upper soil layer yielded shear velocities in the range of 725 to 825 ft/sec; the lower unsaturated layer yielded velocities ranging from 1,750 to 2,600 ft/sec. Due to the coarseness of the geophone spacing (20 feet), these depth and velocity values probably range within 20% of the stated value.

4.1.2 LINE 2

P-wave refraction results for Line 2 (Figure 4.3) provide subsurface information from the ground surface to a depth of about 120 feet. As in Line 1, analysis reveals the presence of three seismic layers which correlate to a low-velocity layer, an unsaturated sediment layer and an interpreted saturated layer. The first arrival data for Line 2 is given in Figure B-3 (Appendix B). Seismic velocities characteristic of bedrock were not encountered. The low velocity soil layer is interpreted as an uncompacted, dry soil zone; it has an approximate thickness of 31 to 49 feet with seismic velocities ranging from 1,150 to 1,550 ft/sec. Due to the coarseness of the geophone spacing (20

feet), the thickness and velocity values for the first layer are probably within 20% of the stated value.

The second layer at a depth of about 35 feet is interpreted as a zone of unsaturated sediments; this layer is approximately 55 to 85 feet thick. Measured seismic velocities (2,200 to 2,725 ft/sec) are likely derived from compacted sand and silt layers; due to the 20 foot geophone spacing, velocities are likely within 15% of the stated value. The bottom of this second layer is interpreted as the water table which ranges in depth from 90 to 115 feet (elevation 4352 to 4378), being higher near Spread Station 1900.

The third layer is believed to consist of saturated sediments, occurring below the interpreted water table. This zone is likely composed of wet sand, silt, clay, and gravel lake and alluvial layers and lenses. Seismic velocities range from about 5,100 to 5,900 ft/sec which are characteristic of water-saturated sand and silt sediments. An alternative interpretation is that the third layer is not saturated and represents a more compacted (or cemented) sequence of alluvial/lake sediments; such layers have been previously identified in Basin and Range surveys. The surface of the third layer has an apparent dip towards the west. The unevenness of the interpreted saturated layer surface may be caused by capillary action in varying lenses of fine sand and silt deposits or artesian conditions. Another explanation may be that substantial vertical and lateral variations in seismic velocities exist in the alluvium, leading to apparent higher velocities and yielding greater thickness of Layer 2 at specific locations (see Appendix B). Thickness of the third layer extends beyond the depth limits of the refraction survey. A deeper layer having seismic velocities characteristic of bedrock was not detected nor was any evidence of faulting within the upper alluvium section.

S-wave refraction results for Line 2 (Figure 4.4) show two seismic layers, a near-surface low velocity zone and a deeper unsaturated sediment zone. Due to very slow shear velocities, depth to the interpreted top of water (at about 110 feet) was beyond the limits of the survey; however, the shear results probably record seismic events to a maximum depth of about 80-90 feet. The upper soil layer yielded shear velocities in the range of 700 to 950 ft/sec; the lower unsaturated layer yielded velocities ranging from 1,675 to 2,425 ft/sec. Due to the coarseness of the geophone spacing (20 feet), these depth and velocity values probably range within 20% of the stated value.

4.1.3 LINE 3

P-wave refraction results for Line 3 (Figure 4.5) provide subsurface information from the ground surface to a depth of approximately 140 feet. As in Lines 1 and 2, analysis reveals the presence of three seismic layers which correlate to a low-velocity layer, an unsaturated sediment layer and an interpreted saturated layer. The first arrival data for Line 3 is given in Figure B-5 (Appendix B). Seismic velocities characteristic of bedrock were not encountered. The low velocity soil layer is interpreted as an uncompacted, dry soil layer; it has an approximate thickness of 44-53 feet with seismic velocities ranging from 1,500 to 1,725 ft/sec. These velocities are significantly higher than the average values recorded at Lines 1 and 2. Due to the coarseness of the geophone spacing (20 feet), these depth and velocity values probably range within 20% of the stated value.

The second layer at a depth of about 50 feet is interpreted as a zone of unsaturated sediments; this layer is approximately 45 to 82 feet thick. Measured seismic velocities (2,300 to 3,400 ft/sec) are likely derived from compacted sand and silt layers that are recorded in drilling logs; due to the 20

foot geophone spacing, velocities are likely within 15% of the stated value. The bottom of this second layer is interpreted as the water table which ranges in depth from 97 to 136 feet (elevation 4352 to 4385), being higher near Spread Stations 0000 and 1100.

The third layer, interpreted as saturated sediments, is likely composed of wet sand, silt, clay, and gravel lake/alluvial sediment layers and lenses. Seismic velocities range from about 5,200 to 6,100 ft/sec which are characteristic of water-saturated sand and silt sediments. An alternative interpretation is that the third layer is not saturated and represents a more compacted (or cemented) layer of sediments; such layers have been previously identified in Basin and Range surveys. The surface of the third layer is irregular and has an apparent overall dip towards the east. The unevenness of the saturated layer surface may be caused by capillary action in varying lenses of fine sand and silt deposits or artesian conditions. Another explanation may be that substantial vertical and lateral variations in seismic velocities exist in the alluvium, leading to apparent higher velocities and yielding greater thickness of Layer 2 at specific locations (see Appendix B). Thickness of the third layer extends beyond the depth limits of the refraction survey. A deeper layer having seismic velocities characteristic of bedrock was not detected nor was any evidence of faulting within the upper alluvium section.

4.2 REFLECTION RESULTS

4.2.1 LINE 2

Figure 4.6 presents the processed reflection section generated for Line 2. The reflection profile presents seismic events in a different manner than the refraction results: the data are displayed as reflection wavelets as a function of time with an estimated depth scale on the right margin.

Reflection Line 2 (as well as Line 3) were processed using filtering, statics, editing, muting, sorting, and stacking functions (Appendix C). Bandpass and fan filtering was used to remove low frequency events and enhance higher frequency reflections; many velocity scans were performed to determine optimum stacking velocities for the section. Deconvolution and migration methods were also used in attempts to enhance the reflection information; however, they provided little or no improvement to the data and were not used in the final section given in Figure 4.6.

The interpreted top of bedrock is represented by the upper edge of the strong black wavelets in Figure 4.6. The character of reflectors is different above and below this line. Strong and weak, discontinuous reflectors above the bedrock are interpreted as various alluvial layers that have been deposited on top of bedrock in recent geological times. Layers within the bedrock are interpreted from lower, dipping reflection patterns; these reflections are stronger on the western end of the line. At Station 1000, a series of apparent parallel reflections (300-450 msec) are interpreted as multiples from the strong bedrock surface; these should not be interpreted as geologic layers. Apparent discontinuities within the rock are interpreted as geologic faults that, in times past, have disturbed the normal geologic stratigraphy. Offsets on several faults are observed between Spread Stations 450 and 800, ranging from about 20 feet to over 50 feet. A less pronounced feature is found near Station 1800. These results do not contain any evidence of fault continuation into the overlying alluvial sediments; hence, the bedrock faulting is interpreted to be older than the age of the

sediments. The reflection method is estimated to be able to detect displacements of 10-20 feet within the bedrock with conditions found at this site.

The strong bedrock reflection occurs in the time interval of 210 to 330 msec. To relate seismic travel time (left scale, Figure 4.6) to bedrock depth (right scale), reflector event times were multiplied by the average stacking velocities for that portion of the section. In this manner, the depth scale was derived for Figure 4.6. Normally, depths are calibrated by comparing reflector time to drilling information, but no information was available at these depths. Thus, our depth scale should only be considered a rough approximation, and less accuracy should be expected at greater depths below the bedrock surface. Using this information, the bedrock surface dips from an estimated depth of 520 feet in the west to over 880 feet in the east.

4.2.2 LINE 3

Figure 4.7 presents the processed reflection section generated for Line 3. The data are displayed as reflection wavelets as a function of time with an estimated depth scale on the right margin.

Reflection Line 3 was processed using filtering, editing, muting, sorting, and stacking functions (Appendix C). Bandpass and fan filtering was used to remove low frequency events and enhance higher frequency reflections; many velocity scans were performed to determine optimum stacking velocities for the section.

The interpreted top of bedrock is represented by the upper edge of the strong black wavelets in Figure 4.7. Very few coherent reflectors were resolved above the bedrock due to the small "time window" between the first arrival energy (which was muted) and the bedrock reflectors. Layers within the bedrock are interpreted from lower, flat-lying and dipping reflection patterns. Apparent discontinuities within the rock are interpreted as geologic faults that, in times past, have disturbed the normal geologic stratigraphy. Offsets on several faults are observed between Spread Stations 1000 and 1300. Similar, less pronounced features, are found between Stations -100 and 250.

The strong bedrock reflection occurs in the time interval of 200 to 265 msec. To relate seismic travel time (left scale, Figure 4.7) to bedrock depth (right scale), reflector event times were multiplied by the average stacking velocities for that portion of the section. In this manner, the depth scale was derived for Figure 4.7. Normally, depths are calibrated by comparing reflector time to drilling information, but no information was available at these depths. Thus, our depth scale should only be considered a rough approximation, and less accuracy should be expected at greater depths below the bedrock surface. Using this information, the bedrock surface dips from an estimated depth of 740 feet at Station 700 to 1020 feet at the eastern end of the line.

Deep intermittent reflectors observed below 430 milliseconds are in a region of weak reflectors and should **not** be considered significant or "real".

SEISMIC LINE 1: PRIMARY WAVE REFRACTION SECTION

SURVEYED: DECEMBER 1996

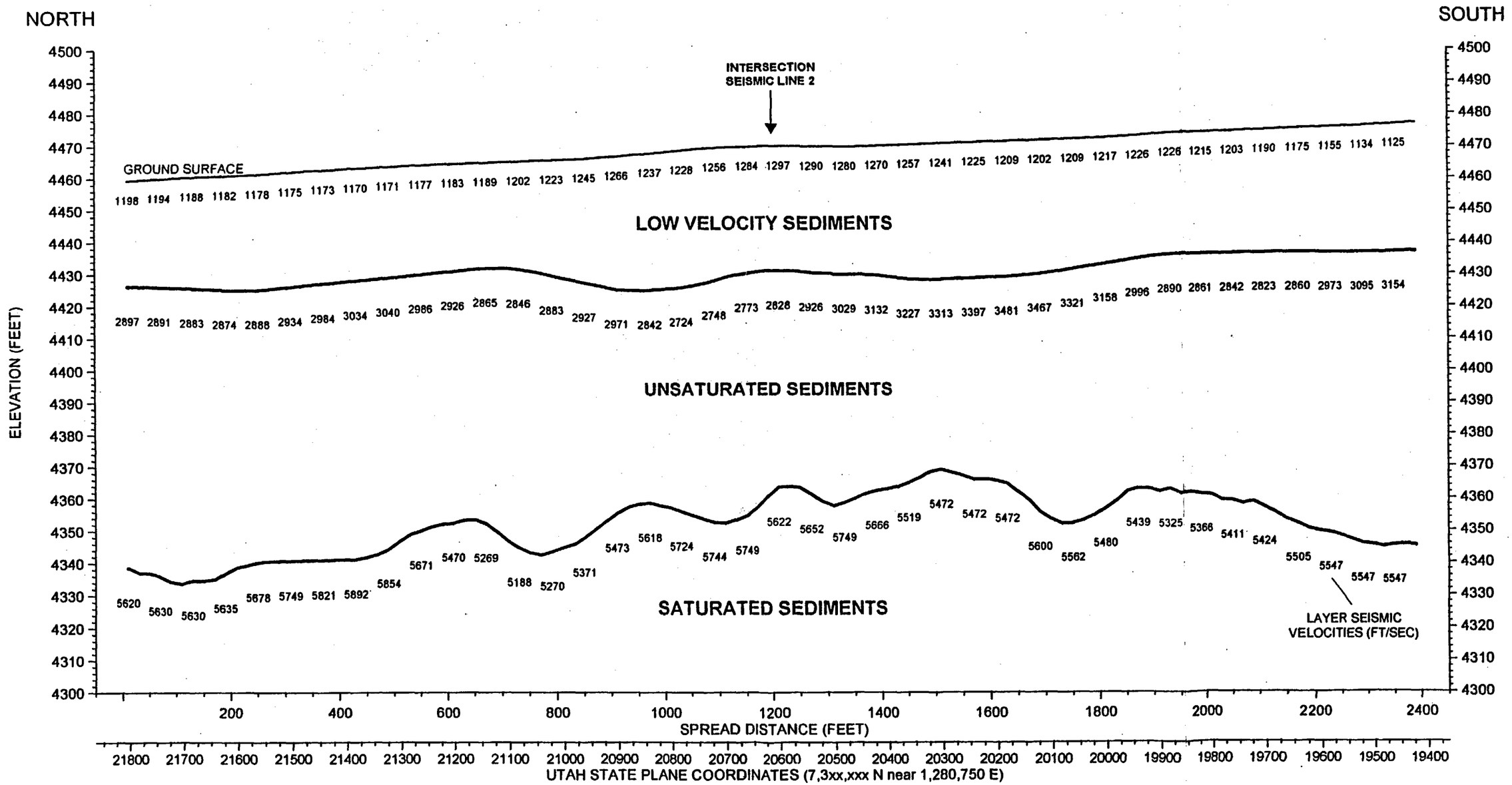

PFSF SITE, SKULL VALLEY, UTAH

GEOSPHERE

FIGURE 4.1

SEISMIC LINE 1: SHEAR WAVE REFRACTION SECTION

SURVEYED: DECEMBER 1996

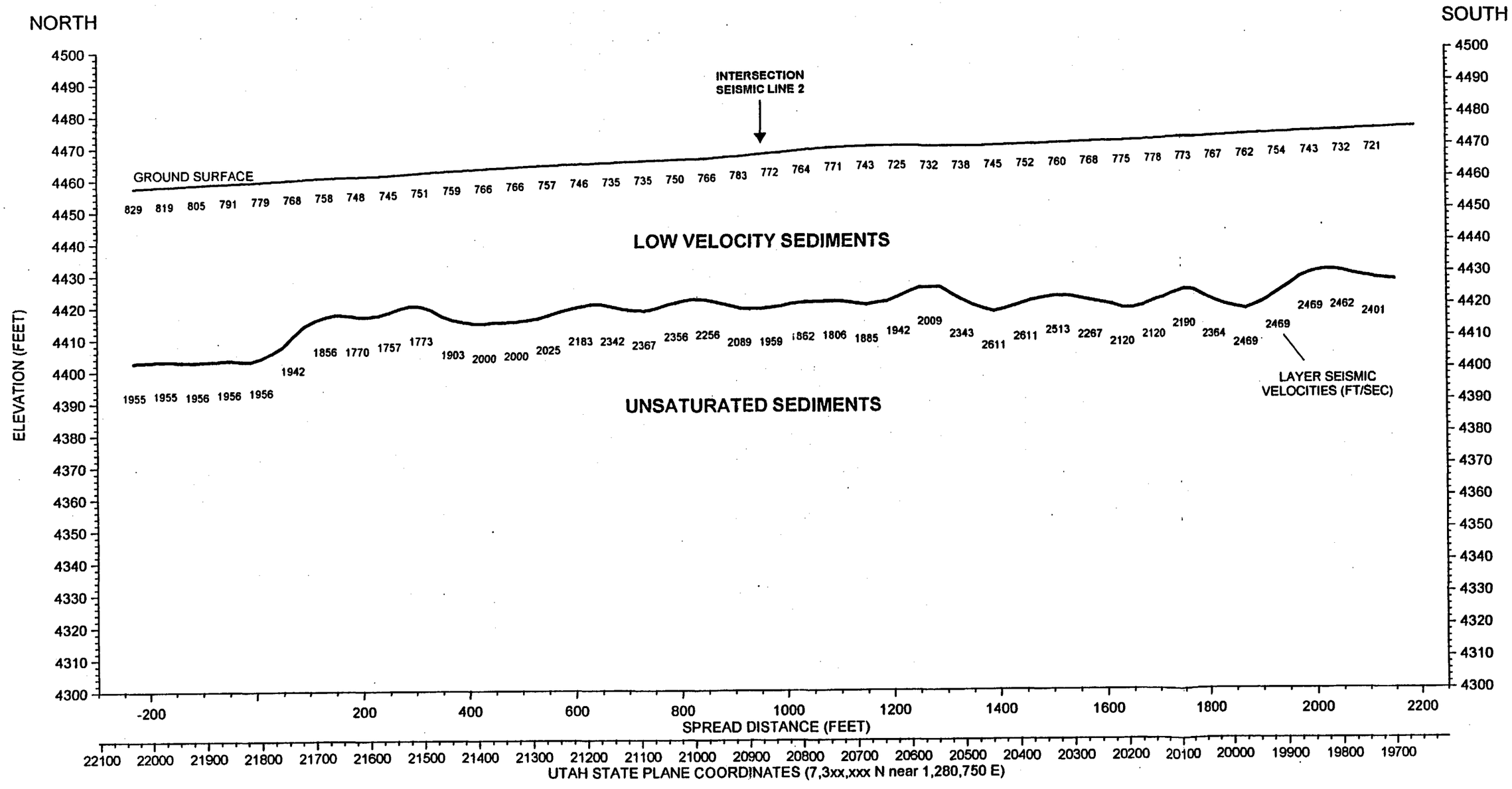

PFSF SITE, SKULL VALLEY, UTAH

GEOSPHERE

FIGURE 4.2

SEISMIC LINE 2: PRIMARY WAVE REFRACTION SECTION

SURVEYED: DECEMBER 1996

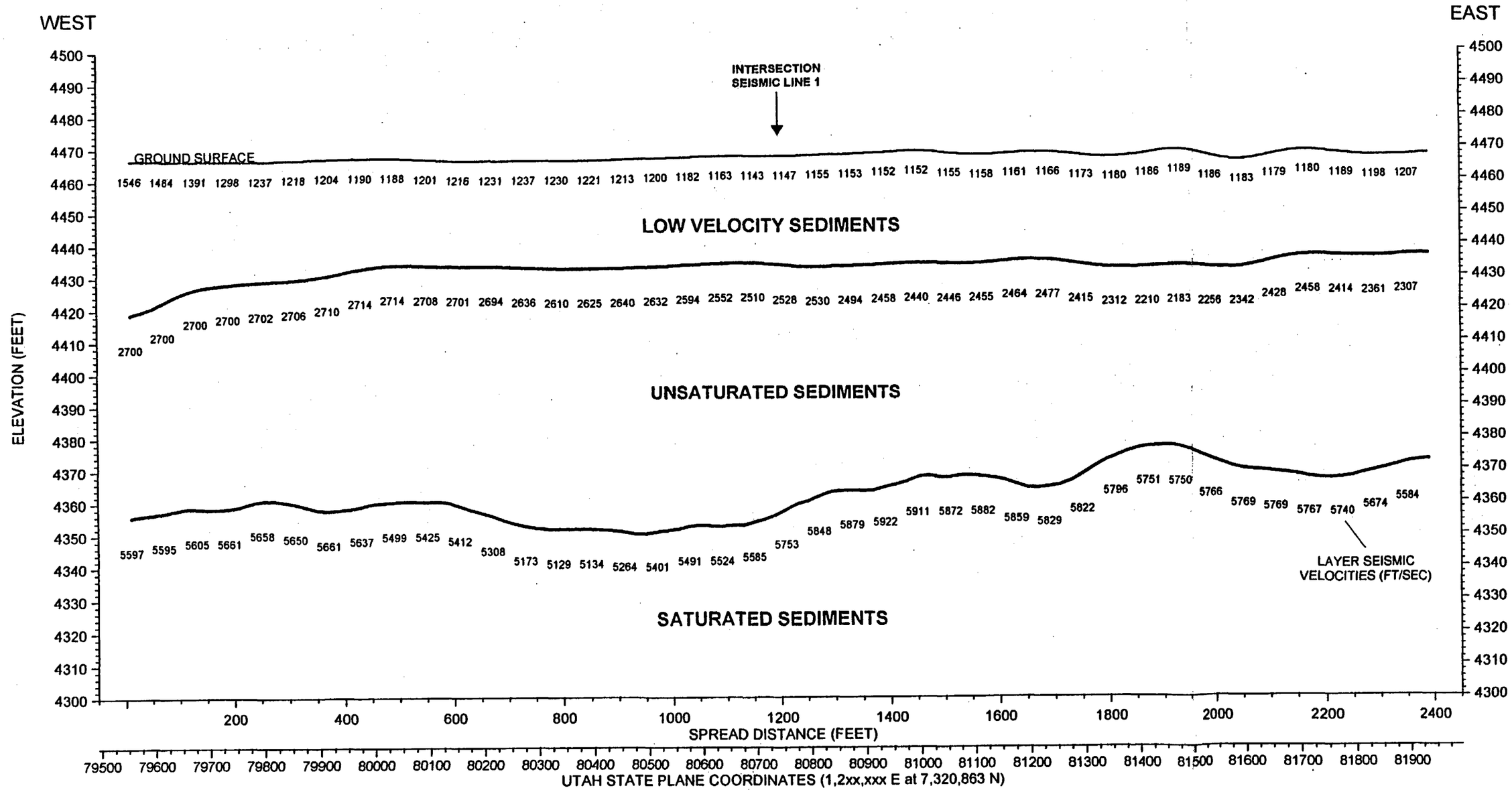

PFSF SITE, SKULL VALLEY, UTAH

GEOSPHERE

FIGURE 4.3

SEISMIC LINE 2: SHEAR WAVE REFRACTION SECTION

SURVEYED: DECEMBER 1996

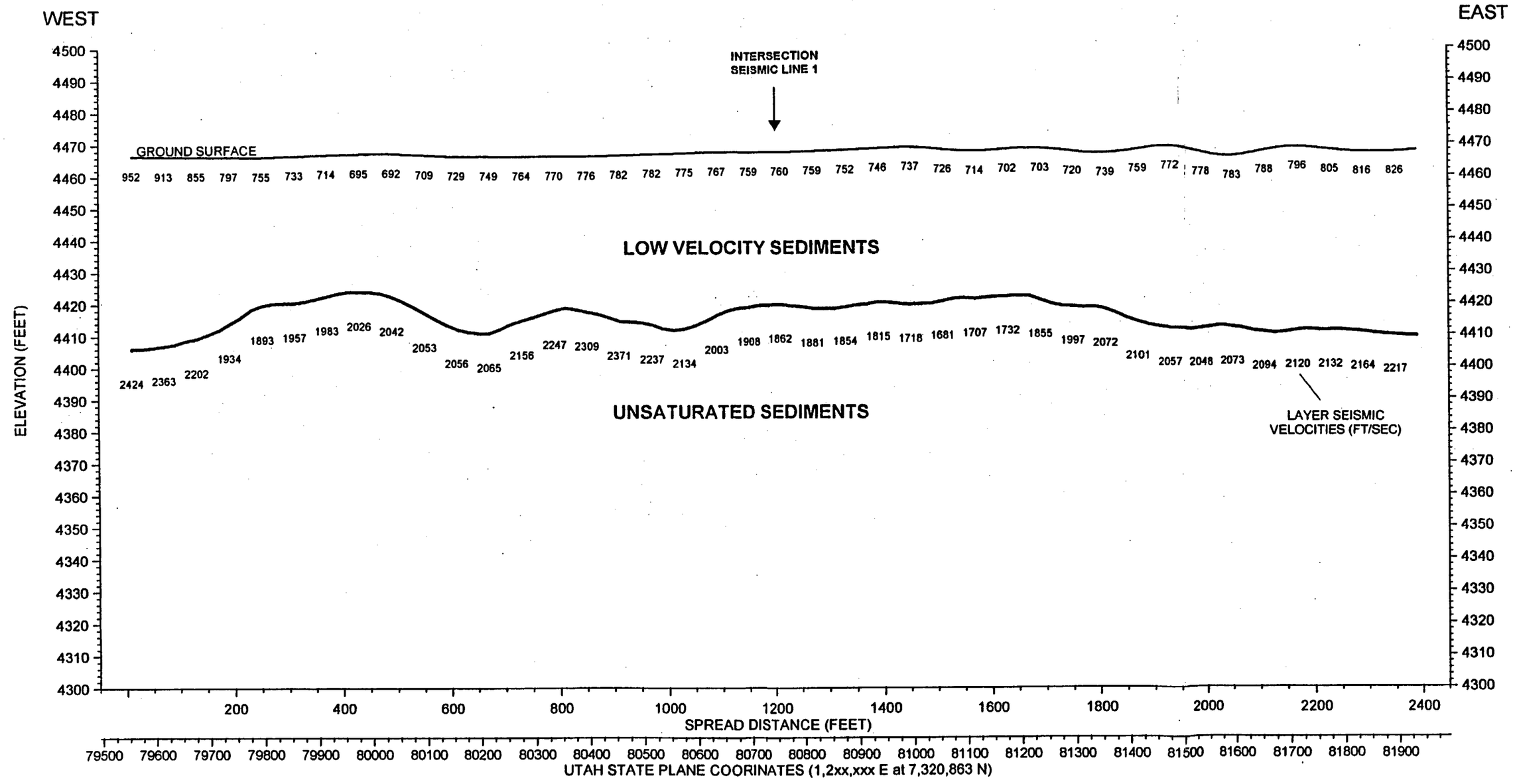

PFSF SITE, SKULL VALLEY, UTAH

GEOSPHERE

FIGURE 4.4

SEISMIC LINE 3: PRIMARY WAVE REFRACTION SECTION

SURVEYED: DECEMBER 1996

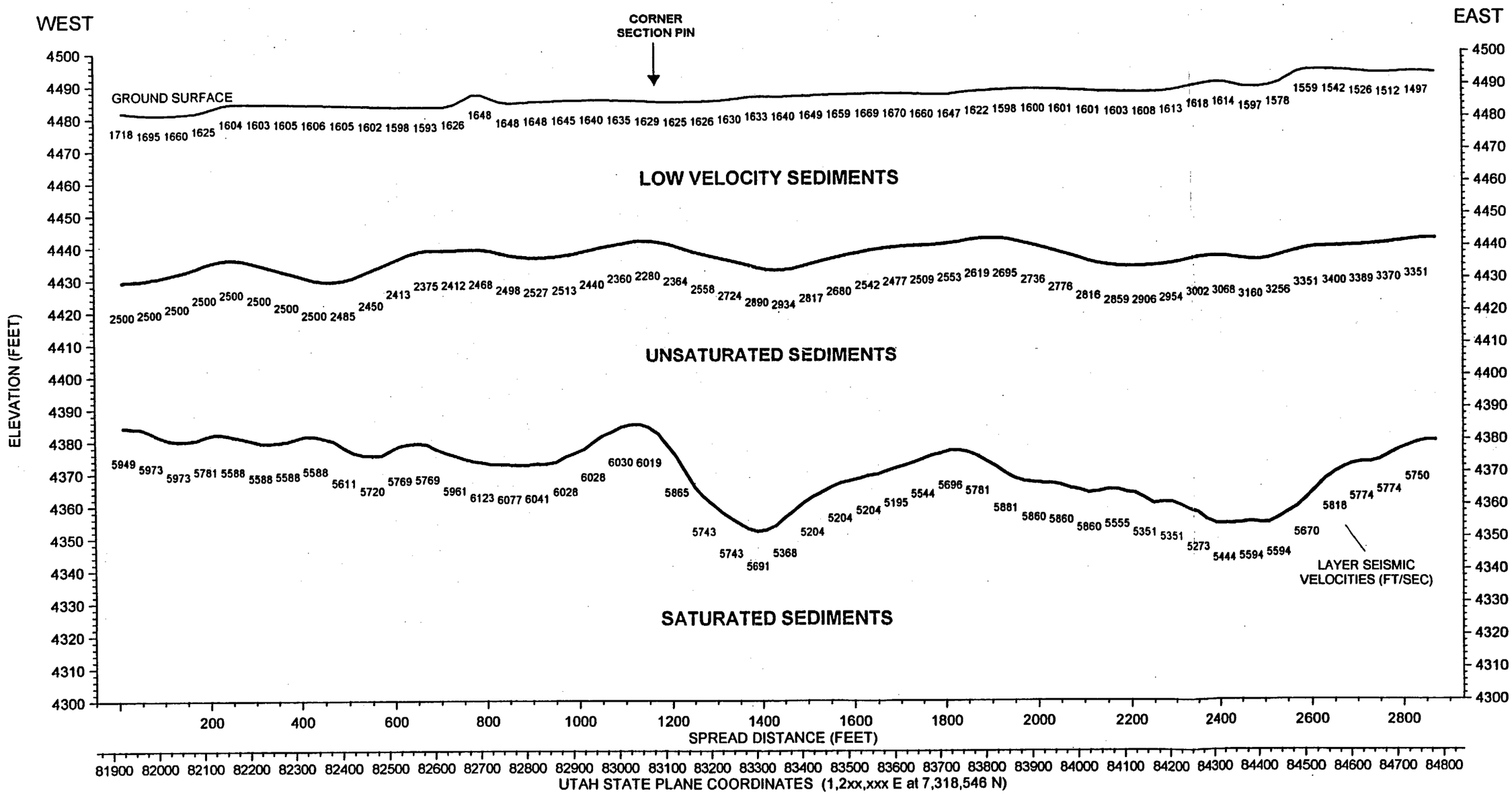

PFSF SITE, SKULL VALLEY, UTAH

GEOSPHERE

FIGURE 4.5

SEISMIC LINE 2: REFLECTION SECTION ACROSS CENTER OF SITE

SURVEYED: DECEMBER 1996

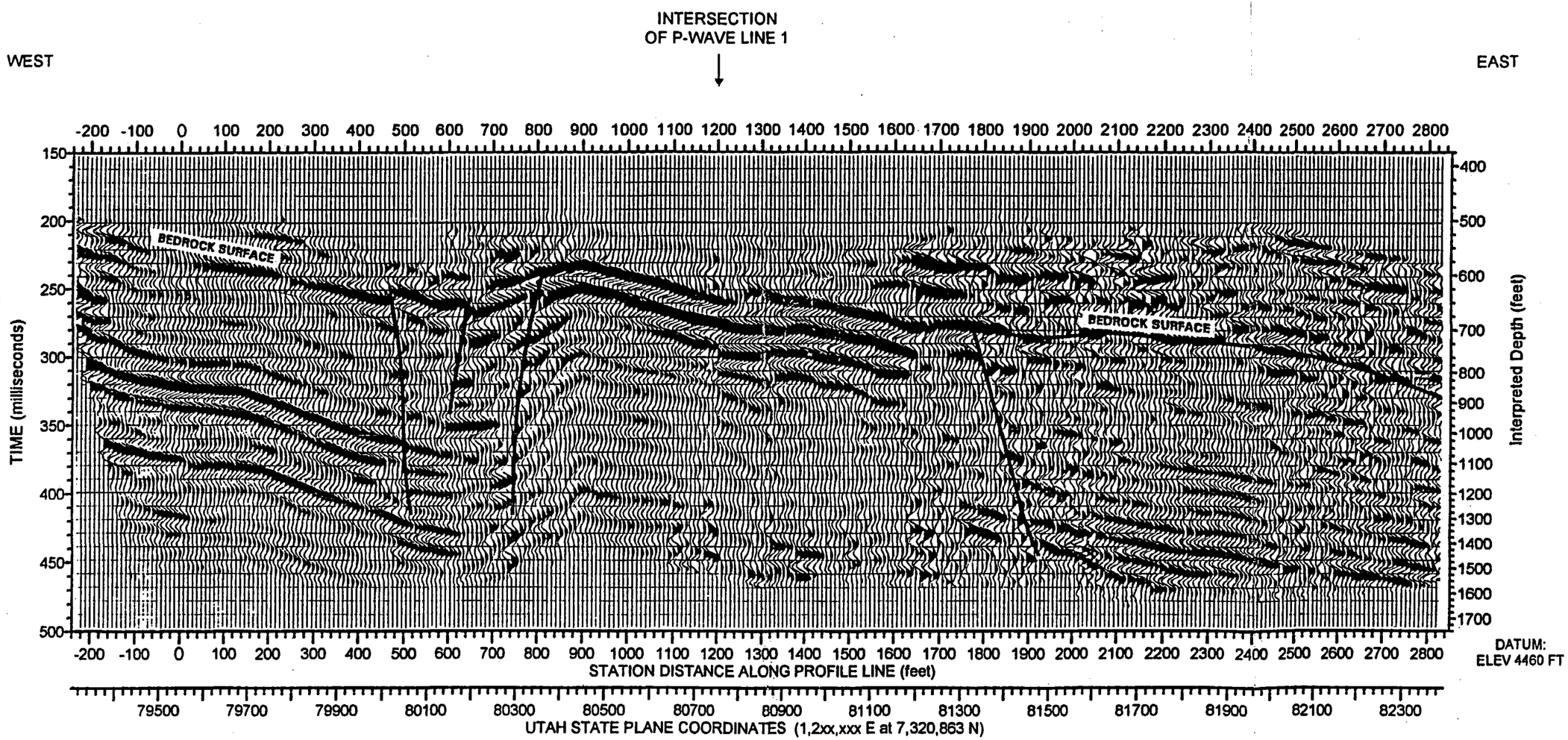

PFSF SITE, SKULL VALLEY, UTAH

GEOSPHERE MIDWEST

FIGURE 4.6

SEISMIC LINE 3: REFLECTION SECTION SOUTHEAST OF SITE

SURVEYED: DECEMBER 1996

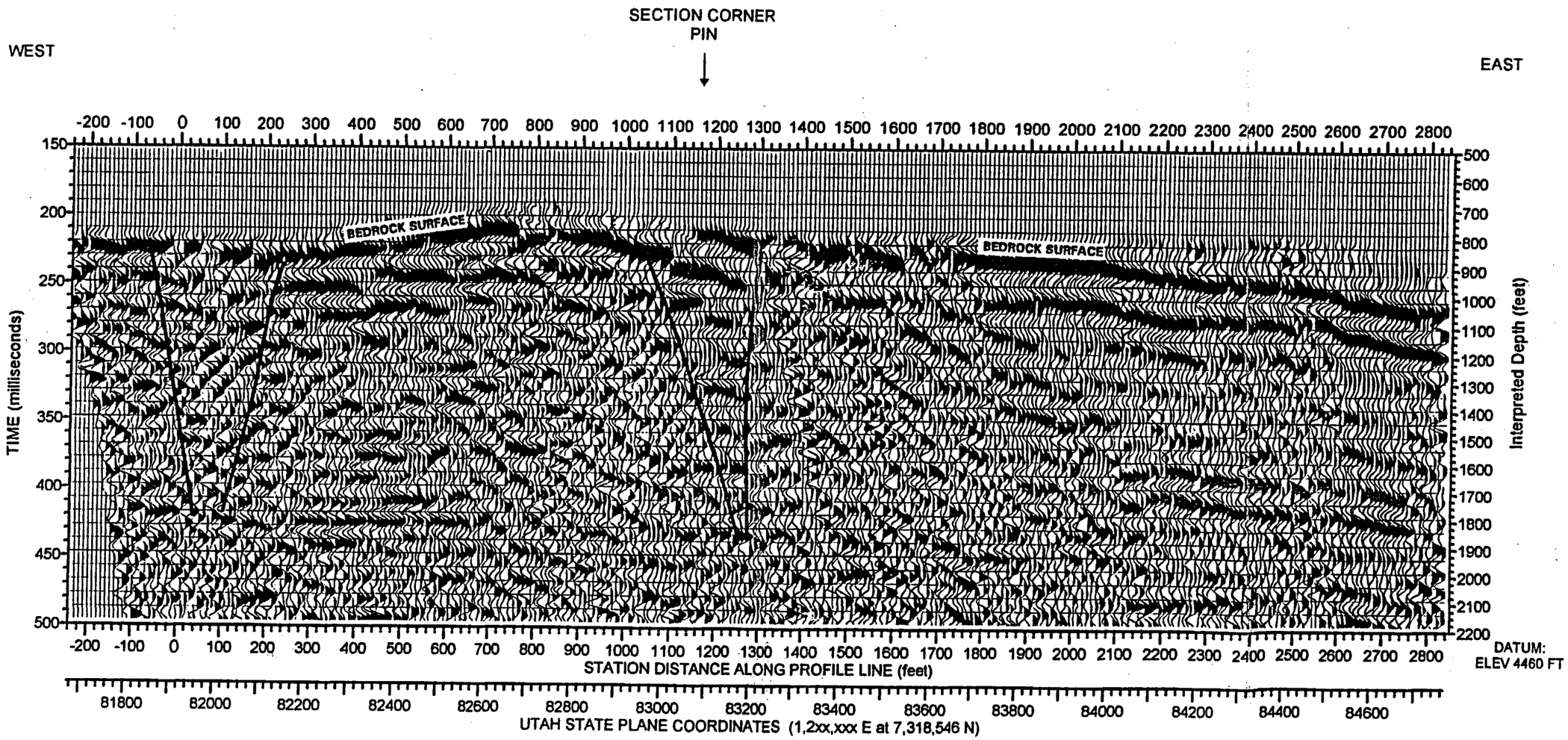

PFSF SITE, SKULL VALLEY, UTAH

GEOSPHERE MIDWEST

FIGURE 4.7

5 SUMMARY OF SEISMIC RESULTS

Analysis of the seismic results provides information about the overburden soil/sediment layers. bedrock surface and bedrock structure.

5.1 OVERBURDEN SOIL/SEDIMENT LAYERS

The refraction P-wave results revealed the presence of three seismic layers within the soil and sediment structure below the site to an approximate depth of 120 to 140 feet. S-wave results identified two soil/sediment zones to a depth of about 80 feet. These results indicate that a low-velocity upper soil zone, an unsaturated sediment zone and an interpreted saturated zone exist below the site. Each layer contains a limited range of seismic velocities which indicate that they are relatively homogeneous in character. As expected, these layers are somewhat horizontal and do not have significant lateral changes in their seismic velocities. No evidence exists for faulting or movement within the alluvium section.

5.2 BEDROCK CONDITIONS

Reflection results provided profiles of the bedrock surface. estimates of its depth and stratigraphy and structure within the bedrock. The bedrock surface shows a significant dip from the west portion of the site towards the eastern portion. Along Line 2, bedrock depths are estimated to range from 520 feet to over 820 feet below the proposed storage area; along Line 3, bedrock depth dips from 740 feet at Station 700 to over 1020 feet at the eastern end of the line along the access easement.

Reflectors within the bedrock revealed many strong and weak reflecting layers, many of which showed significant dip to the east. Discontinuities in the reflection profiles on both lines are interpreted as a complex fault system within the bedrock; however, no evidence exists for the continuation of these features into the lower alluvium section.

APPENDICES

APPENDIX A

DESCRIPTION OF SEISMIC METHODS A-1

APPENDIX B

SEISMIC REFRACTION DATA B-1

APPENDIX C

SEISMIC REFLECTION DATA C-1

APPENDIX A

DESCRIPTION OF SEISMIC METHODS

Seismic Exploration

"Seeing" with sound is a familiar concept. Bats and submarines do it and so does a blind man with a cane. In total darkness we can sense whether we are in a closed or open space by the echoes from our footsteps.

Seismic exploration, in principle, is nothing more than a mechanized version of the blind person and his cane. In place of the tapping cane we have a hammer blow on the ground, or an explosion in a shallow hole, to generate sound waves. And we "listen" with geophones, spring-mounted electric coils moving within a magnetic field, which generate electric currents in response to ground motion. Careful analysis of the motion can tell us whether it is a direct surface-borne wave, one reflected from some subsurface geologic interface, or a wave refracted along the top of an interface. Each of these waves tells us something about the subsurface.

Applications of Seismic Methods

Seismic reflection and refraction have numerous potential applications to a variety of environmental and geotechnical problems, including:

- Depth and characterization of bedrock surface
- Buried channel definition
- Depth of water table
- Depth and continuity of stratigraphic interfaces
- Rippability determination
- Mapping of faults and other structural features
- Location of karst features

Seismic Reflection

Reflections of sound waves from the subsurface arrive at the geophones some measurable time after the source pulse. If we know the speed of sound in the earth and the geometry of the wave path, we can convert that seismic travel time to depth. By measuring the arrival time at successive surface locations we can produce a profile, or cross-section of seismic travel times. A simple concept.

In practice, the speed of sound in the earth varies enormously. Dry, unconsolidated sand might carry sound waves at 800 feet per second (fps) or less. At the other extreme, unfractured granite might have a velocity in excess of 20,000 fps. And the more layers between the surface and the layer of interest, the more complicated the velocity picture. Various methods are used to estimate subsurface velocities, including refraction analysis, borehole geophysical measurements, estimates from known lithologic properties, and analysis of reflection times at increasing offsets. Generally, a combination of velocity estimation methods will give the best results.

Seismic Refraction

When a sound wave crosses an interface between layers of two different velocities, the wave is refracted. That is, the angle of the wave leaving the interface will be altered from the incident angle, depending on the relative velocities. Going from a low-velocity layer to a high-velocity layer, a wave at a particular incident angle (the "critical angle") will be refracted along the upper surface of the lower layer. As it travels, the refracted wave spawns upgoing waves in the upper layer, which impinge on the surface geophones.

Sound moves faster in the lower layer than the upper, so at some point, the wave refracted along that surface will overtake the direct wave. This refracted wave is then the first arrival at all subsequent geophones, at least until it is in turn overtaken by a deeper, faster refraction. The difference in travel time of this wave arrival between geophones depends on the velocity of the lower layer. If that layer is plane and level, the refraction arrivals form a straight line whose slope corresponds directly to that velocity. The point at which the refraction overtakes the direct arrival is known as the "critical distance", and can be used to estimate the depth to the refracting surface.

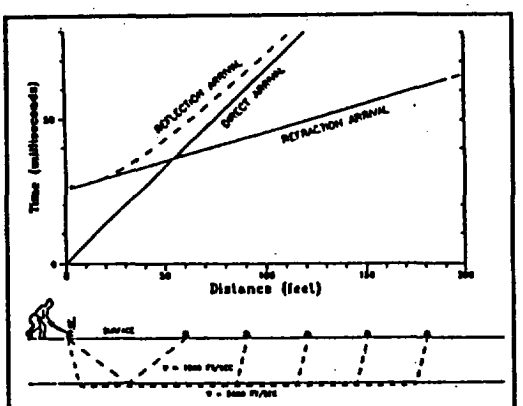

Seismic Travel Time Diagram

Field Procedures

Seismic field acquisition involves three basic elements:

- a source of acoustic energy
- seismic receivers, or geophones
- a seismograph to record the data

The choice of seismic source depends on the needs of the particular survey. For deeper work, a powerful source, such as the "Elastic Wave

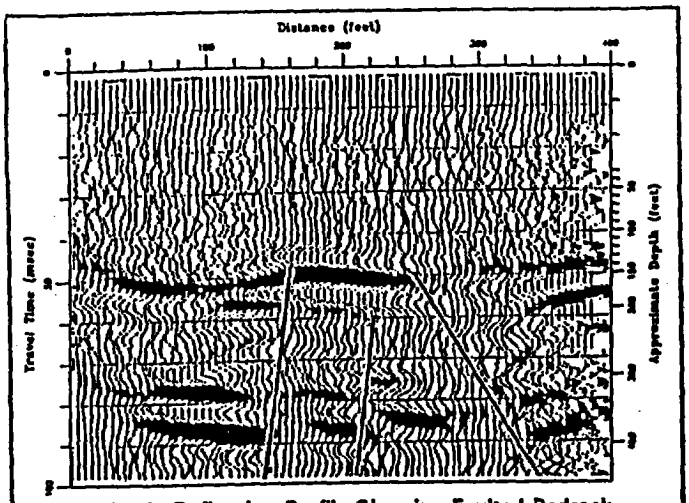

Seismic Reflection Profile Showing Faulted Bedrock

Generator", a trailer-mounted accelerated weight drop, would be used. Shallow, high-resolution work demands a high-frequency source, such as the "Betsy" downhole shotgun. Geophones are also selected according to the needs of the survey: higher-frequency phones for high-resolution work, lower-frequency for deeper targets. Our Bison Instruments 8024 and 9024 seismographs both offer 24-channel recording capability, with internal data storage to enhance field productivity. The 9024 floating-point system is arguably the best engineering seismograph available today, with recording specifications better than many oil industry systems.

Typically, the geophones are placed along a line at equal intervals (3 to 5 feet for high-resolution, 10 to 20 feet for deeper work). The arrangement of source and geophones depends on the nature of the survey. For seismic reflection, the relative source and geophone positions are usually held constant, the entire 24-geophone array being moved along with the shot. (The logistical difficulties of this are eased by using a "roll switch", which selects 24 geophones from an overall spread of 48.) Refraction work requires shots at opposite ends of the spread, with additional shot locations depending on the particular needs of the job.

Data Processing

A seismic reflection section is, in principle, a series of seismic traces recorded by a geophone at the same location as the shot. Each trace must be time-corrected to allow for the source-geophone offset, the correction depending on the layer velocities. If the correction is accurate, a given reflection is moved up the trace to the position it would have were the source and receiver coincident. Using the field procedure described above, 12 individual traces, of various source-receiver offsets, will have a common midpoint. These 12 traces, after correction, are summed to produce one common depth point, or 12-fold CDP trace. The resulting summed traces are then displayed as a single seismic cross-section.

A seismic trace may contain as many as 4000 individual samples. With each shot generating 24 traces, a typical seismic line will contain several million samples. Geosphere processes these data with the "Eavesdropper" package, developed by the Kansas Geological Survey for 386/486 PC computers. Specialized reflection data can also be processed using common offset software developed by the Canadian Geologic Survey. Augmented by several programs developed by Geosphere, we now have a seismic reflection processing system tailored to the unique problems encountered in high-resolution seismic work. We believe this system to be unmatched in the industry.

Seismic refraction data can be interpreted in several ways. The simplest approaches assume a series of plane, dipping layers. While effective in many instances, this method is not suited to irregular or undulating layers. The Generalized Reciprocal Method (GRM) goes beyond the plane-layer assumption, producing a profile which allows for irregularities in the refracting surface. When possible, we combine GRM results with reflection data to produce the most comprehensive seismic interpretation available.

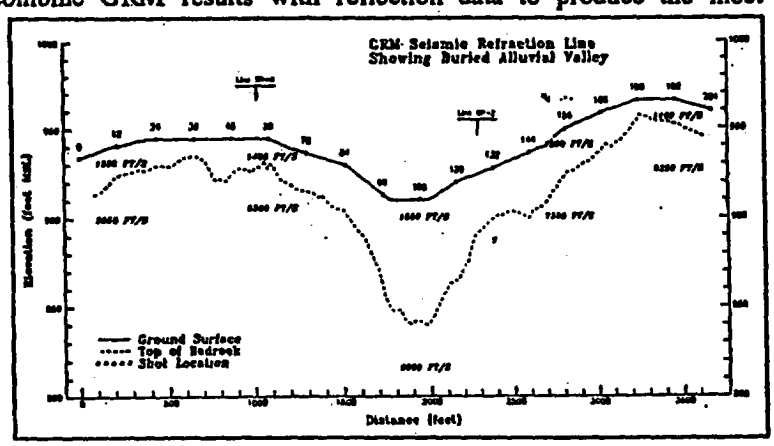

Summary

Seismic exploration is a powerful geophysical technique. The same principles which have achieved unparalleled success in the petroleum industry can also enhance environmental and hazardous waste site investigations, ground water exploration, geotechnical engineering, archaeology, and mining exploration. At Geosphere, we intend to continue providing the most effective, state-of-the art seismic exploration available.

3800 Gettysburg Street • Midland, Michigan 48642 Phone (517) 832-8828 • Fax (517) 832-8831
8616 Xylon Ave N Ste G • Brooklyn Park, MN 55445 Phone (612) 493-3596 • Fax (612) 493-3597

APPENDIX B

SEISMIC REFRACTION DATA

B-1: SEISMIC REFRACTION PROCESSING DESCRIPTION: LINES 1, 2 & 3

FIGURE B-1: REFRACTION LINE 1: P-WAVE
Plot of first arrival times for shot locations (-480 to 2880 ft)

FIGURE B-2: REFRACTION LINE 1: S-WAVE
Plot of first arrival times for shot locations (0000 to 2400 ft)

FIGURE B-3: REFRACTION LINE 2: P-WAVE
Plot of first arrival times for shot locations (-480 to 2880 ft)

FIGURE B-4: REFRACTION LINE 2: S-WAVE
Plot of first arrival times for shot locations (0000 to 2400 ft)

FIGURE B-5: REFRACTION LINE 3: P-WAVE
Plot of first arrival times for shot locations (-480 to 3360 ft)

SEISMIC REFRACTION PROCESSING DESCRIPTION
LINES 1, 2 & 3

DATA ACQUISITION PARAMETERS

Shotpoint Interval:	240 ft	Geophone Interval:	20 ft
Configuration:	on end, split spread	Traces/Record:	24 traces
Instruments:	Bison 9024	Gain Type:	AGC
Sample Rate:	0.25 msec	Data Length:	500 msec
Energy Source:	EWG 5	Field Filters:	16 to 250 Hz
Near Offset:	10, 250, 490 ft	Geophones:	30 Hz low-cut
Far Offset:	470, 710, 950 ft		

PROCESSING SEQUENCE

I. **Picking of first arrival times (Interpex's Firstpix software)**
   A. Data displayed and expanded on computer screen
   B. Picks made with electronic cursor, stored to file

II. **Entry of positions and geometries**
   A. Manual entry of shot locations and elevations
   B. Manual entry of geophone geometries, locations and elevations

III. **Sort data into 48 channels per shot location**
   A. 24 channel first-pick files are sorted into proper 48 channel data sets

IV. **Layer assignment by first arrival breaks**

V. **Gremix analysis using generalized reciprocal method (GRM)**

VI. **Plotting of Gremix layer results with seismic velocities.**

FIGURE B-1. REFRACTION LINE 1: P-WAVE: PLOT OF FIRST ARRIVAL TIMES

FOR SHOT STATIONS -480 TO 2880

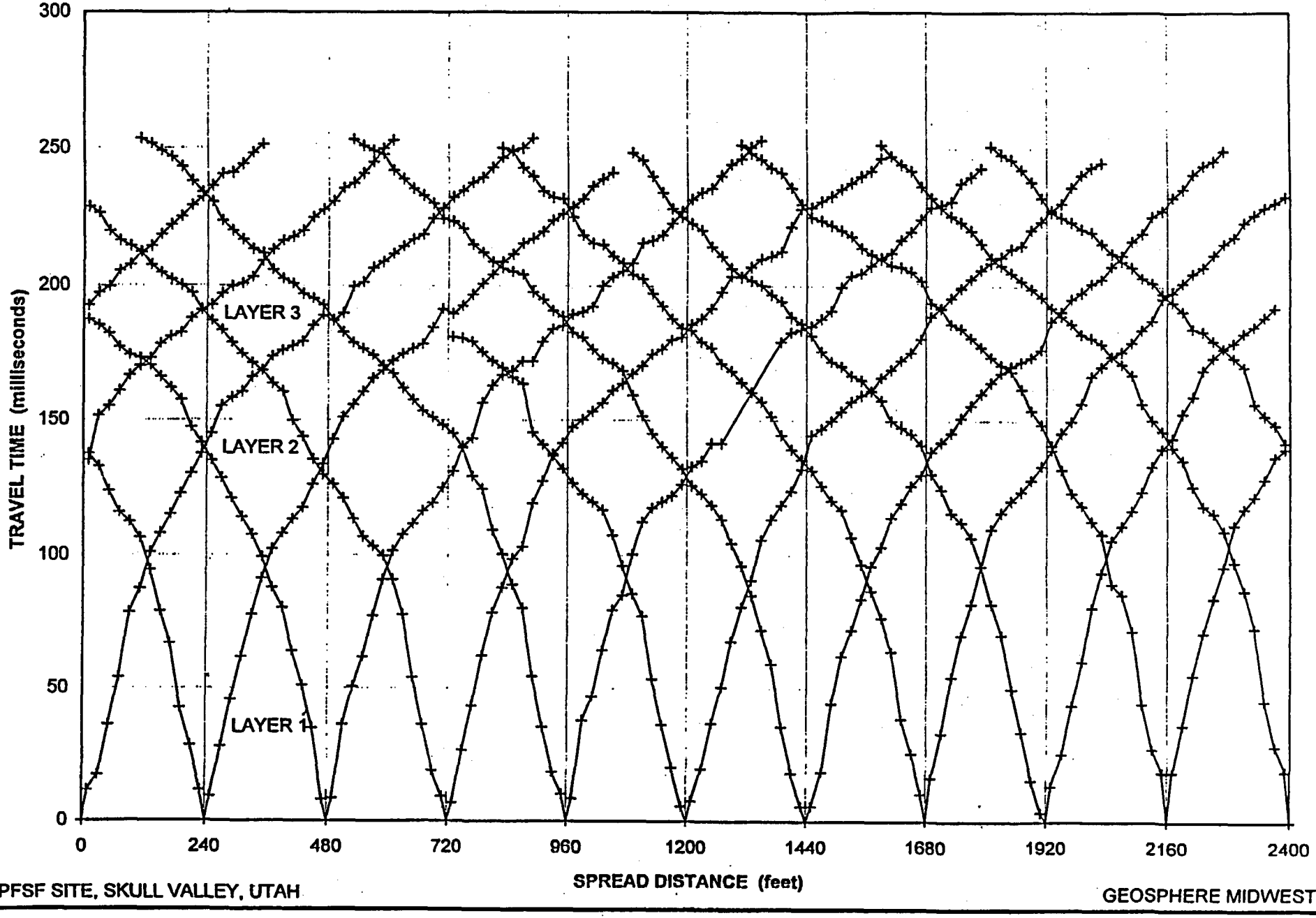

PFSF SITE, SKULL VALLEY, UTAH

GEOSPHERE MIDWEST

FIGURE B-2. REFRACTION LINE 1: S-WAVE: PLOT OF FIRST ARRIVAL TIMES

FOR SHOT STATION LOCATIONS 0000 TO 2400

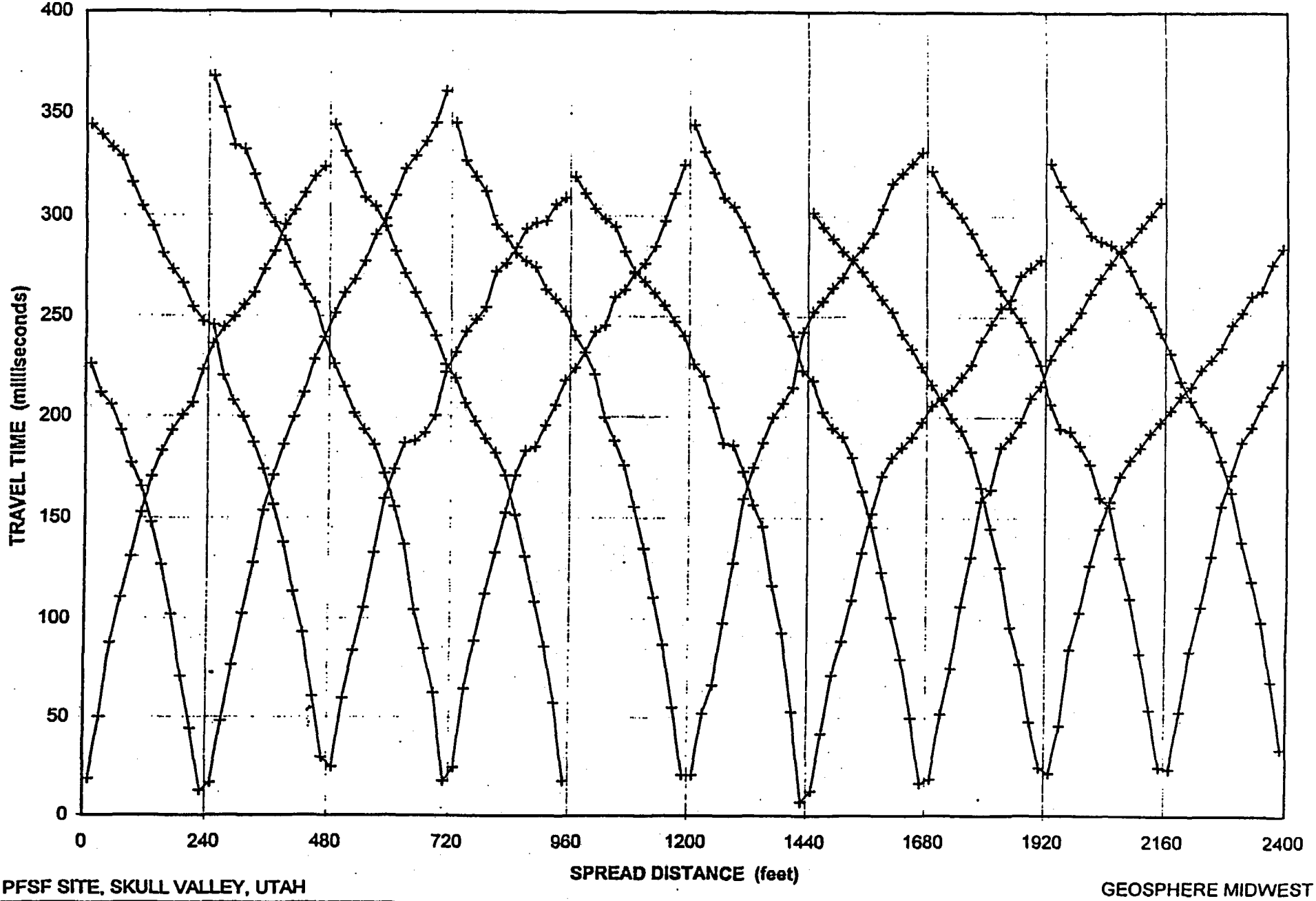

PFSF SITE, SKULL VALLEY, UTAH

GEOSPHERE MIDWEST

FIGURE B-3. REFRACTION LINE 2: P-WAVE: PLOT OF FIRST ARRIVAL TIMES

FOR SHOT STATIONS -480 TO 2880

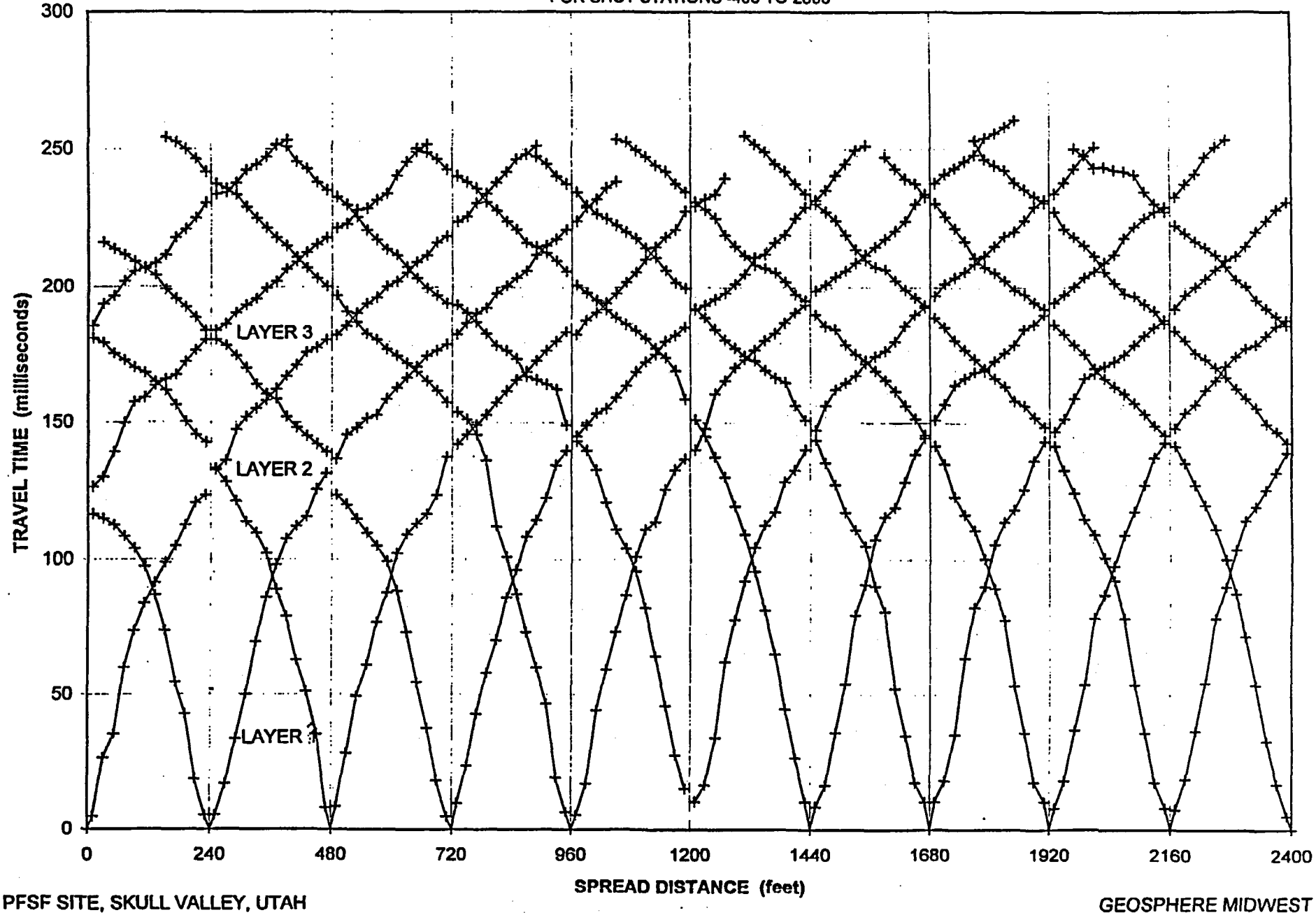

PFSF SITE, SKULL VALLEY, UTAH

GEOSPHERE MIDWEST

FIGURE B-4. REFRACTION LINE 2: S-WAVE: PLOT OF FIRST ARRIVAL TIMES

FOR SHOT STATIONS 0000 TO 2400

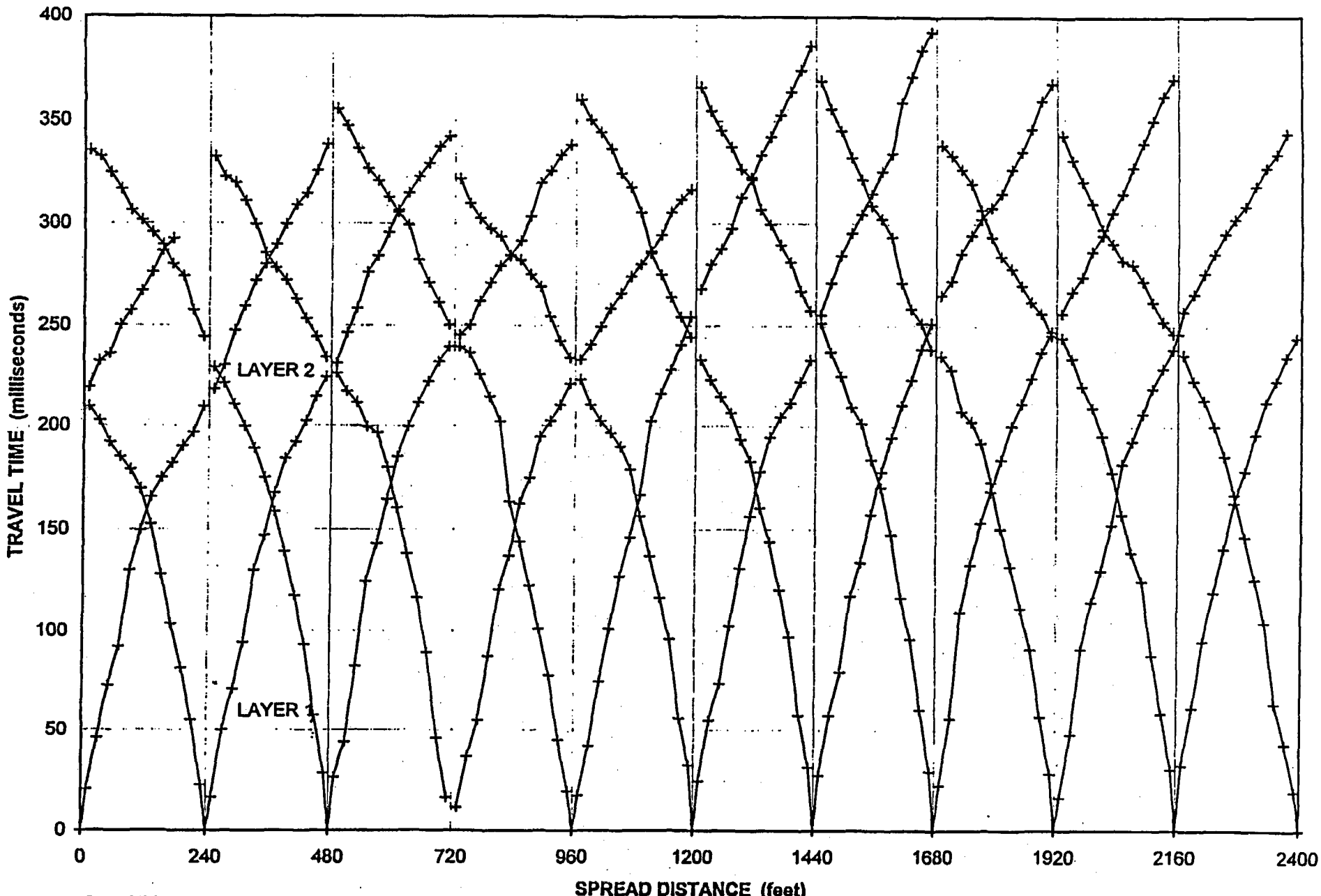

PFSF SITE, SKULL VALLEY, UTAH

GEOSPHERE MIDWEST

FIGURE B-5. REFRACTON LINE 3: P-WAVE: PLOT OF FIRST ARRIVAL TIMES

FOR SHOT STATIONS -480 TO 3360

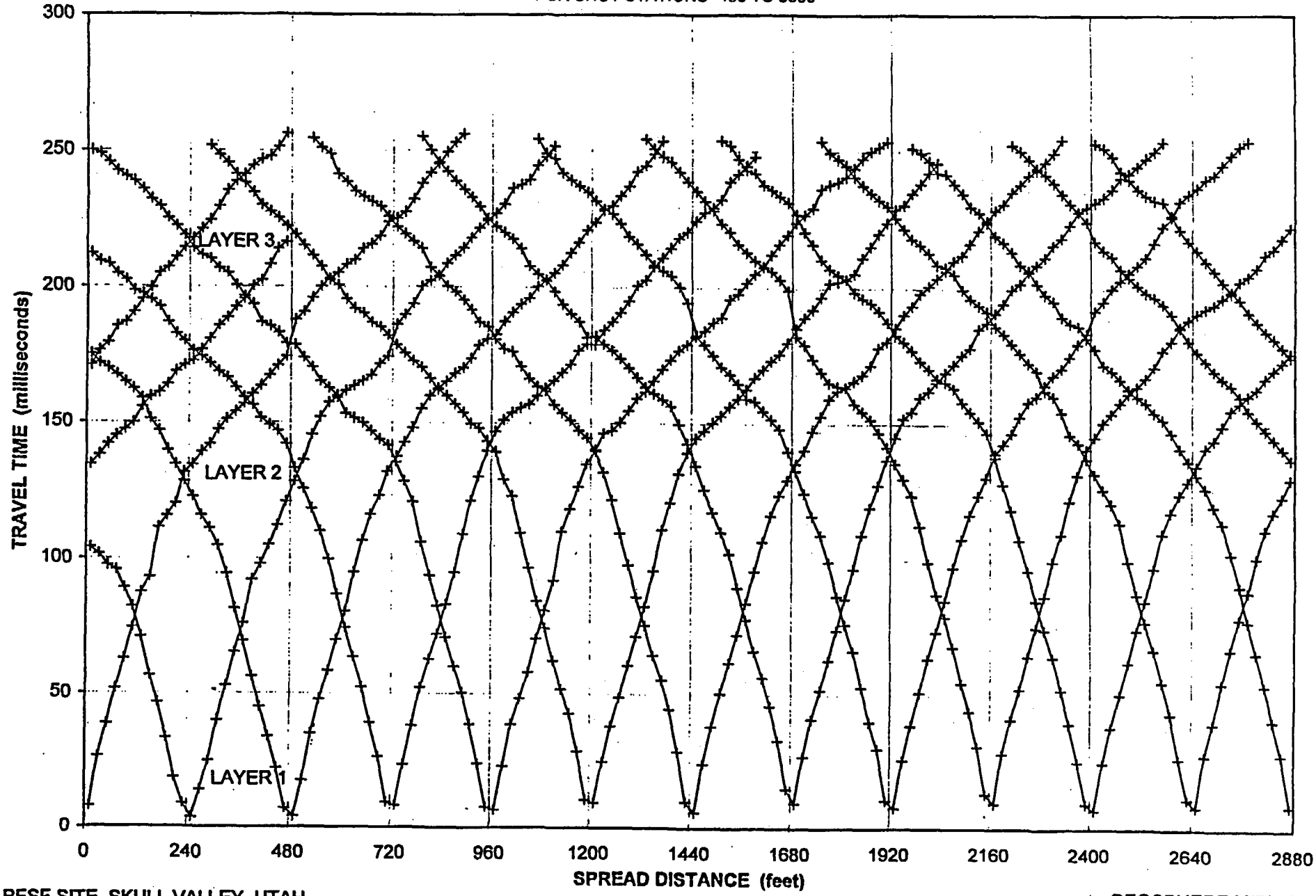

PFSF SITE, SKULL VALLEY, UTAH

GEOSPHERE MIDWEST

APPENDIX C

SEISMIC REFLECTION DATA

C-1: SEISMIC REFLECTION PROCESSING DESCRIPTION: LINES 2 AND 3

SEISMIC REFLECTION PROCESSING DESCRIPTION
LINES 2 & 3

DATA ACQUISITION PARAMETERS

Shotpoint Interval:	20 ft	Geophone Interval:	20 ft
Configuration:	Off-end	Traces/Record:	24 traces
Instruments:	Bison 9024	Gain Type:	AGC
Sample Rate:	0.25 msec	Data Length:	500 msec
Energy Source:	EWG 5	Field Filters:	32 to 250 Hz
Near Offset:	490 ft	Geophones:	30 Hz low-cut
Far Offset:	950 ft		

PROCESSING SEQUENCE

I. Filtering
- A. Bandpass Filtering: 45-290 Hz
- B. Fan Filtering: 5-12

II. Preprocessing
- A. Trace Editing
  - 1. Kills
  - 2. Surgical Mutes (Airwave, First Arrival, Ground Roll)
- B. CDP Sorting
- C. Elevation Correction/Datum Correction: 4460 ft

III. Velocity Analysis
- A. Exact NMO Equation Velocity Analysis
- B. Constant Velocity Stacks/Scans
- C. Refraction Results

IV. Stacking
- A. NMO Correction
- B. CDP Stacking: 12 fold
- C. AGC Scaling: 120 msec

V. Postprocessing
- A. Front End Muting
- B. Programmed Gain: +5 Db
- C. Trace Normalization

APPENDIX 2C

FINAL REPORT OF A GEOMORPHOLOGICAL SURVEY OF SURFICIAL LINEAMENTS NORTH OF HICKMAN KNOLLS,TOOELE COUNTY, UTAH

Final Report of a Geomorphological Survey of Surficial Lineaments North of Hickman Knolls, Tooele County, Utah

Prepared for Stone & Webster Engineering Corporation
7677 East Berry Avenue
Englewood, Colorado 80111-2137
Fax: 303-741-7670

Prepared by Donald R. Currey
Limneotectonics Laboratory
Mail Stop 270 OSH
University of Utah
Salt Lake City, Utah 84112
Voice: 801-581-6419
Fax: 801-581-8219
E-mail: don.currey@geog.utah.edu

Signed: Donald R. Currey

November 22, 1996

Introduction

Surficial lineaments symbolized as "faults or fractures having small or undetermined displacement" and described as "the north-south-trending Hickman Knolls fault and lineament zone" have been mapped by Sack (1993; cited below as a dataset) in an area (T5S, R8W, sections 5, 6, 7, and 8) north of Hickman Knolls that is near a potential candidate site for a surface storage facility. The work scope of this geomorphological survey is to perform an evaluation of these surficial lineaments, to establish their origin and design impact for the adjacent siting area. Technical requirements provided by SWEC list several specific questions:

> (A) Are the lineaments properly identified, i.e., are the notations on the referenced geologic map indicative of seismic faults? If yes, (1) what geologic evidence supports the existence of these lineaments as a surface expression of seismic faults, (2) are the lengths and relative location of the lineaments accurately shown on the map, (3) is there any connection between the lineaments and the presence of the Hickman Knolls in Skull Valley, (4) since bedrock appears to be several hundred feet or more below the surface in this area, are the lineaments indicative of faulting in the bedrock below, and (5) would they be considered "active" (capable) under the definition contained within 10 CFR Part 100, Appendix A?
>
> (B) If no, what is their source of origin and do they require any engineering consideration in the design of a surface storage facility?

Datasets

Observations summarized in this report are based on several sets of data. Surficial geology of the area is depicted on the *Quaternary Geologic Map of Skull Valley, Tooele County, Utah*, by Dorothy Sack (1993, Utah Geological Survey Map 150) at a scale of 1:100,000, with accompanying booklet. Topography and surface features of the area are shown on the USGS 7.5 minute series orthophotomap (topographic) of the Hickman Knolls Quadrangle, Utah—Tooele Co., which was published in 1973 at a scale of 1:24,000 and with a contour interval of 10 feet. Surface features of the area appear in three stereopairs of USGS/EROS Data Center aerial photographs, viz., frames GS-VCXL 2-2 and 2-3 (4-29-72, from which the orthophotomap was compiled), frames GS-VEFK 1-46 and 1-47 (8-8-76), and frames GS-VERD 2-16

and 2-17 (8-27-78). Information collected during a site visit (in part accompanied by SWEC engineering geologist Richard P. Gillespie) is contained in field notes dated 28 Oct 96.

Observations

Field data gathering (including a dozen hand-augered holes 2 to 6 ft deep) on October 28, 1996, was followed by office examination of aerial photographs. With little if any ambiguity, these data yield a coherent set (the following bulleted list) of constraining observations that are fundamental to the interpretation of the geomorphology of the surficial lineaments immediately north of Hickman Knolls.

- A total of at least twenty surficial lineaments, about half of which are quite distinct and about half of which are much fainter, are parallel or subparallel to each other (not *en echelon*) and occur within a limited area of roughly one square mile.
- The surficial lineaments have an individual length of no more than 1.2 miles; similarly, the lineament group has a maximum length of 1.2 miles.
- Within that length, the generally NNE-SSW trends of the surficial lineaments display as much as 45° of sweeping curvature (convex to the NW).
- The surficial lineaments seem to radiate southward from a relatively small area (near the center of T5S, R8W, section 5), where many of them tend to be tangent to each other.
- The small area from which the surficial lineaments seem to radiate is adjacent to a major alluvial fan-fed stream (now ephemeral) that has its headwaters in Indian Hickman Canyon, at the 11,000-ft level of the Stansbury Mountains.
- The surficial lineaments are <u>not</u> one-sided scarps—they are two-sided ridges that range in height from about 1 to 9 ft and in width from about 10 to 100 ft.
- The ridges have hummocky (probably wind-modified) crests, but nevertheless are distinctly accordant in elevation (4485 ± 10 ft a.s.l.), both along a single ridge and from ridge to ridge.

- To the north and to the southwest, the ridges appear to be vertically accordant with—and planimetrically tangent to—a zone of strong Lake Bonneville shoreline development.
- The ridges are composed of relatively clean sand to depths of at least 6 ft (the maximum depth of hand augering on October 28), although at least one ridge also contains some fine gravel.
- All of the sandy ridges are partially overlain by (are older than) Lake Bonneville deep-water sediments (white marl and reworked white marl).
- There is no evidence on the ground that lineaments of any sort project southward into or onto the bedrock of Hickman Knolls. (The sedimentary bedrock of Hickman Knolls has weakly expressed homoclinal bedding that strikes generally north and dips about 20° east, giving rise to very low, north-trending hogback ridges that are completely unrelated to the lineaments.)

Conclusions

The above constraining observations lead to two inescapable conclusions that are definitive with respect to the nature of the linear features (and definitive with respect to the main concern on page 2 of this report).

(1) The surficial lineaments north of Hickman Knolls are almost certainly not "faults or fractures having small or undetermined displacement," as mapped from aerial photographs by Dorothy Sack, but rather they are sandy beach ridges deposited by southward longshore transport of sediments from a local sandy delta (Indian Hickman Canyon paleodrainage) in the Stansbury shoreline coastal zone, which was active about 20,000 radiocarbon years (about 23,000 calendar years) ago, during the transgression of Lake Bonneville.

(2) The sandy beach ridges (surficial lineaments) north of Hickman Knolls provide no basis for inferring anything about the paleoseismicity of the proposed surface storage facility site—except that (a) the ridges themselves are not of tectonic origin and (b) the ridges show no discernible evidence of having been disturbed by faulting since they were first deposited by lacustrine processes about 20,000 radiocarbon years (about 23,000 calendar years) ago.

APPENDIX 2D

NO APPENDIX 2D

APPENDIX 2E

ANALYSIS OF VOLCANIC ASH

THE UNIVERSITY OF UTAH

John Donnell, Project Manager
Stone & Webster Engineering Corporation
P. O. Box 5406
Denver, CO 80217-5406

March 11, 1997

Dear Mr. Donnell,

Enclosed is a report on the results of analyses of volcanic ash samples submitted to me by Richard Gillespie. If you have any questions about the report, please let me know.

Sincerely yours,

William P. Nash
Professor of Geology and Geophysics
University of Utah

801-581-8587 (o)
801-582-6807 (h)
801-581-7065 (FAX)
wpnash@mines.utah.edu

Department of Geology and Geophysics
College of Mines and Earth Sciences
719 W.C. Browning Building
Salt Lake City, Utah 84112-1183
(801) 581-7162
Fax: (801) 581-7065
http://www.mines.utah.edu/~wmgg

Analysis of Volcanic Ash

William P. Nash
Department of Geology and Geophysics
University of Utah
Salt Lake City , Utah

Summary

- Two samples of volcanic ash, A-1-85 and A-1-90, were analyzed for their chemical composition by electron microprobe. They are chemically identical in composition.

- The unknown samples are chemically similar to the fallout ash of the Walcott Tuff. The Walcott Tuff was erupted approximately 6.4 ± 0.2 million years ago from an eruptive center near Heise, Idaho, on the eastern Snake River Plain, and is a widely distributed ash unit in the western United States.

- The ash samples analyzed do not resemble widespread younger ashes such as the Bishop, Lava Creek or Huckleberry Tuffs.

Analysis of Volcanic Ash

Objective. The objective was to perform a chemical analysis of the glass component in two ash samples (A-1-85 and A-1-90), and to attempt to correlate those samples with a known ash on the basis of chemical similarity.

Procedure. An aliquot of each sample was dried overnight at 110°C, mixed with epoxy and placed on a 1" circular mount. The mount was polished to an optically flat surface, and coated with a thin coat of carbon by vacuum deposition. The samples were analyzed with a Cameca model SX-50 electron microprobe. The analytical conditions were: accelerating voltage 15 KeV, beam current 25 μA, and a beam diameter of 15 μm. Approximately 20 glass shards were analyzed in each sample.

Analytical results. Results of the analyses, together with comparative analytical data for other ashes, are presented in Table 1 in terms of weight percent element. Results of individual glass shard analyses, together with averages, are given in the appendix, where they are presented in both elemental and oxide formats. Table 1 also provides the standard deviation for each element as determined on a laboratory standard.

The two samples provided are identical in composition within the limits of analytical uncertainty. The similarity is apparent in Fig. 1 which plots Fe versus Ca for individual glass shards from the two samples. One glass shard in sample A-1-85 has an anomalously high Fe and Ca content.

Comparison with other ashes. An assessment of the correlation of an unknown ash with a known ash is based on the degree of similarity of the composition of glass shards. The composition of the unknown is compared to known compositions using a statistical distance function described by Perkins et al., 1995 (copy appended). In electron microprobe analysis we use Ca, Cl, Fe, Mn, Mg, Ti and Ba; the elements Al and Si are not used because they show little variation from tuff to tuff. The elements Na, K and F are not used because the concentrations of these elements may be variably changed during post-depositional hydration of glass shards.

The unknown samples were statistically compared with 1,965 analyses of tuffs, representing approximately 450 tuff units younger than 17 million years that occur in the western United States. The unknown samples most closely match the fallout ash of the Walcott Tuff. Comparative analyses of four samples of the Walcott Tuff are presented in Table 1, and individual shard analyses are compared in Figure 2.

The Walcott Tuff was erupted from the Heise volcanic field in the eastern Snake River Plain approximately 6.4±0.2 million years ago. It has also been known in the literature as the Tuff of Blue Creek. Its source is inferred to be the Blue Creek caldera. It was a large volume eruption and is found in a

number of locations throughout the western interior of the U. S. as well as in the High Plains of Nebraska and Kansas. A recent description of the Walcott Tuff is provided by Morgan (1992) who presents several whole-rock age dates for the Tuff ranging from 6.3±0.3 to 6.9±0.4, although there is uncertainty about the validity of the oldest date. The value we have adopted in our work (6.4±0.2 Ma) is the average of the four dates on established samples of the Walcott Tuff (Morgan, 1992, Table 1). In the local Utah region, the Walcott Tuff outcrops on the west side of the Salt Lake Valley (sample OQM90-02, Table 1) and has been encountered in several deep exploration wells in the Great Salt Lake.

Your samples do not resemble younger, widespread ashes common to the Great Basin, such as the Bishop, Lava Creek or Huckleberry Tuffs. A comparison to these is provided in Table 1 and Figure 3. Although the unknown samples are somewhat similar to Lava Creek B in terms of Fe and Ca (Fig. 3), the two units are distinctly different in terms of Ti, Mg and Ba contents.

References:

Morgan, L. A., 1992, Stratigraphic relations and paleomagnetic and geochemical correlations of ignimbrites of the Heise volcanic field, eastern Snake River Plain, eastern Idaho and western Wyoming, in Link, P. K., Kuntz, M. A., and Platt, L. B., eds., Regional geology of eastern and western Wyoming: Geological Society of America Memoir 179, p. 215-225.

Perkins, M. E., Nash, W. P., Brown, F. H., and Fleck, R. J., 1995, Fallout tuffs of Trapper Creek, Idaho - A record of Miocene explosive volcanism in the Snake River Plain volcanic province. Geological Society of America Bulletin, v. 107, 1484–1506.

William P. Nash
Professor of Geology and Geophysics
University of Utah
Salt Lake City, UT 84112
801-581-8587
wpnash@mines.utah.edu
March 11, 1997

Comparative Analyses

sample	Unit	Si	Ti	Al	Fe	Mn	Mg	Ca	Ba	K	Na	Cl	F	O	Total
A-1-85	unnamed	34.4	0.11	6.23	0.88	0.03	0.06	0.34	0.06	4.39	2.01	0.10	0.21	51.7	100.5
A-1-90	unnamed	34.7	0.12	6.22	0.87	0.03	0.05	0.33	0.05	4.44	2.17	0.10	0.19	51.7	100.9
WAL93-01	Walcott Tuff	34.4	0.12	6.10	0.84	0.03	0.05	0.32	0.09	4.29	2.41	0.11	0.13	49.7	98.6
PAL93-06	Walcott Tuff	34.0	0.12	6.02	0.82	0.03	0.05	0.31	0.09	4.45	2.02	0.10	0.16	52.4	100.6
AMF93-01	Walcott Tuff	34.4	0.12	6.10	0.85	0.03	0.05	0.33	0.09	4.32	2.34	0.11	0.17	50.6	99.5
OQM90-02	Walcott Tuff	34.0	0.12	6.05	0.84	0.03	0.05	0.33	0.08	4.37	2.29	0.11	0.15	51.0	99.4
oc-92-5	Bishop Tuff	35.2	0.03	6.40	0.52	0.03	0.02	0.30	0.00	3.73	2.32	0.08	0.04	51.7	100.3
oc92-02	Lava Creek B	34.7	0.06	6.20	1.04	0.03	0.01	0.36	0.01	4.16	2.23	0.14	0.15	50.5	99.7
brd92-01	Huckleberry	34.5	0.05	6.18	1.15	0.02	0.01	0.40	0.02	4.11	2.29	0.14	0.13	51.3	100.2
Std. Dev.	Analytical standard	0.35	0.007	0.06	0.02	0.004	0.007	0.008	0.010	0.34	0.21	0.004	0.029	0.63	0.67

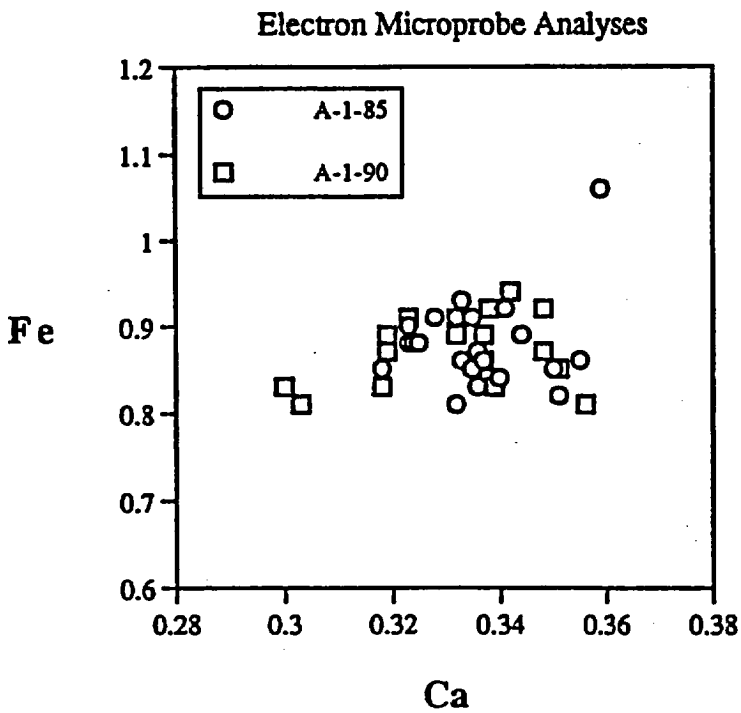

Figure 1. Analyses of individual glass shards from samples A-1-85 and A-1-90 .

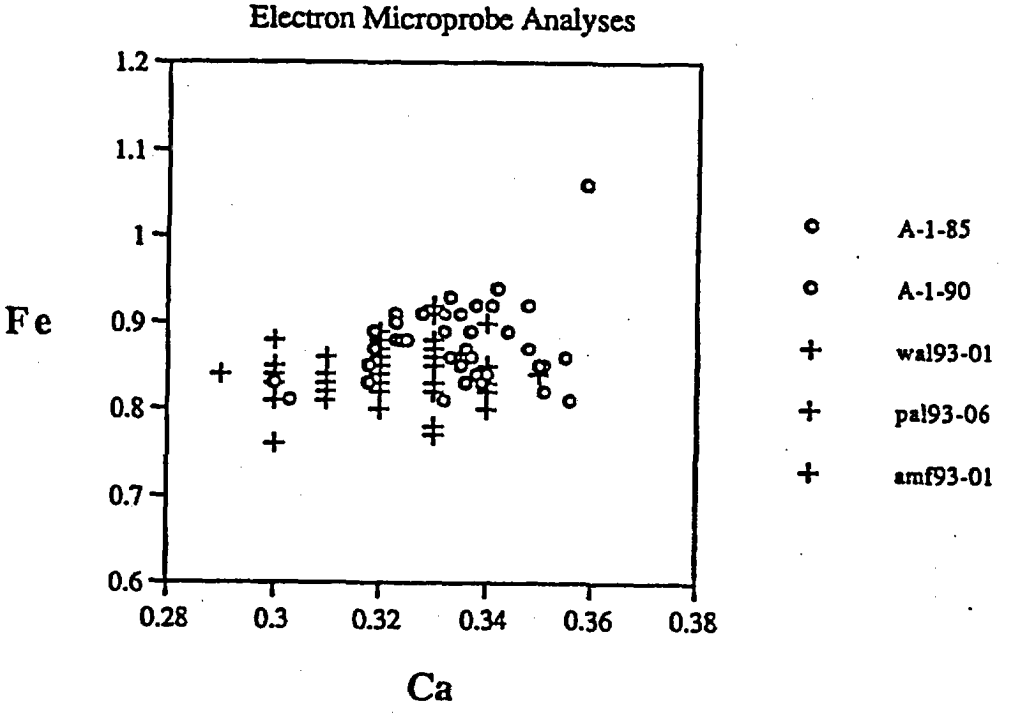

Figure 2. Analyses of individual glass shards from samples A-1-85 and A-1-90 and three samples of the Walcott tuff

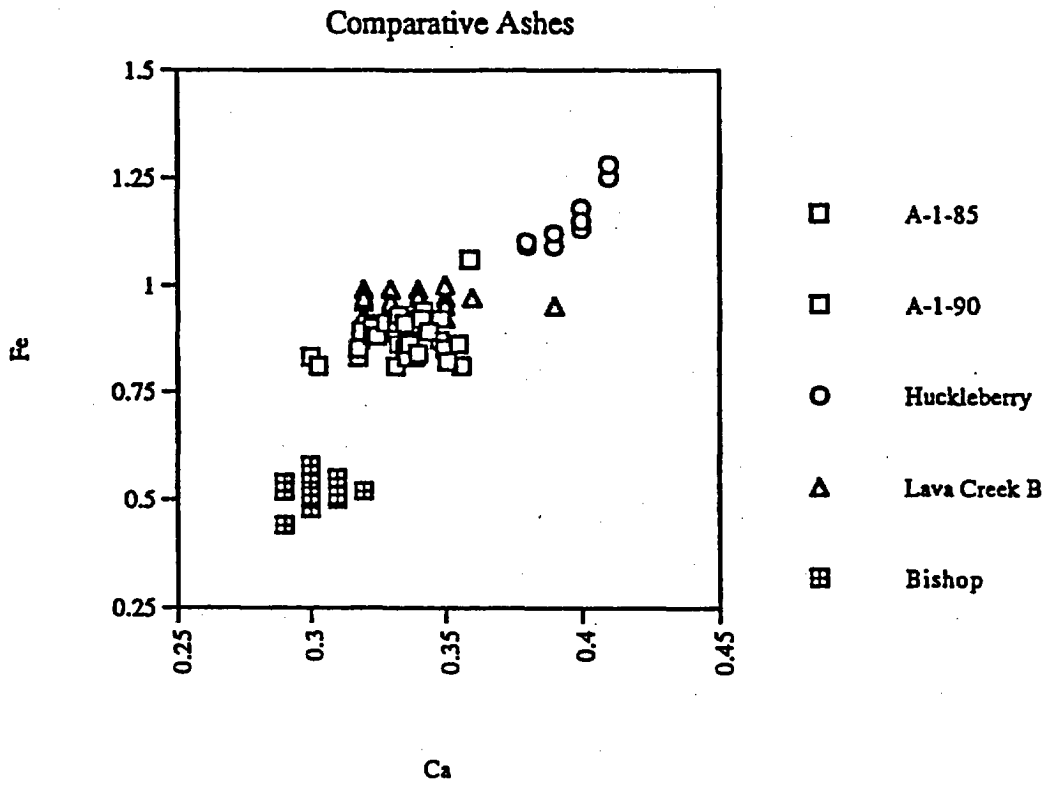

Figure 3. Analyses of individual glass shards from samples A-1-85 and A-1-90 and widespread Quaternary ashes.

Individual Shard Analyses - Elemental

Sample	Si	Ti	Al	Fe	Mn	Mg	Ca	Ba	K	Na	Cl	F	O	Total
A-1-85	34.5	0.10	6.23	0.82	0.04	0.05	0.35	0.08	4.64	2.05	0.09	0.21	51.3	100.5
A-1-85	34.4	0.10	6.22	0.85	0.03	0.06	0.35	0.06	4.29	2.23	0.09	0.26	52.5	101.4
A-1-85	34.0	0.11	6.17	0.86	0.03	0.06	0.33	0.00	4.58	2.05	0.08	0.24	51.1	99.6
A-1-85	34.6	0.12	6.22	0.85	0.05	0.05	0.34	0.04	4.39	2.45	0.10	0.21	51.7	101.1
A-1-85	34.3	0.13	6.26	0.84	0.03	0.05	0.34	0.06	4.50	1.99	0.11	0.28	52.0	100.9
A-1-85	34.4	0.14	6.27	0.86	0.01	0.07	0.34	0.08	4.43	2.09	0.11	0.20	52.0	101.0
A-1-85	34.1	0.11	6.17	0.81	0.02	0.06	0.33	0.04	4.58	1.99	0.11	0.15	51.7	100.2
A-1-85	34.3	0.10	6.14	0.83	0.01	0.04	0.34	0.04	4.59	1.95	0.11	0.19	51.2	99.8
A-1-85	34.7	0.12	6.29	0.85	0.06	0.06	0.32	0.03	4.40	2.22	0.11	0.20	51.5	100.9
A-1-85	34.6	0.11	6.33	0.88	0.06	0.06	0.32	0.08	4.37	2.10	0.11	0.18	51.7	100.9
A-1-85	34.2	0.12	6.13	0.88	0.01	0.04	0.32	0.07	4.59	2.08	0.11	0.18	51.1	99.8
A-1-85	34.3	0.10	6.23	0.87	0.01	0.06	0.34	0.09	4.49	2.17	0.11	0.18	51.5	100.4
A-1-85	34.4	0.10	6.21	0.86	0.02	0.07	0.36	0.06	4.51	2.07	0.12	0.15	51.6	100.6
A-1-85	34.5	0.10	6.26	0.92	0.05	0.07	0.34	0.11	4.37	2.17	0.12	0.18	52.4	101.5
A-1-85	35.0	0.15	6.29	0.88	0.05	0.06	0.33	0.07	2.35	0.35	0.10	0.26	53.1	98.9
A-1-85	34.5	0.13	6.26	0.89	0.03	0.06	0.34	0.06	4.62	2.09	0.10	0.21	51.4	100.6
A-1-85	34.0	0.13	6.22	0.93	0.05	0.05	0.33	0.10	4.33	1.66	0.10	0.21	52.0	100.0
A-1-85	34.4	0.11	6.24	0.91	0.05	0.05	0.33	0.00	4.48	2.18	0.13	0.18	52.1	101.1
A-1-85	34.4	0.05	6.23	0.90	0.05	0.06	0.32	0.05	4.47	2.19	0.09	0.23	51.9	100.9
A-1-85	34.3	0.09	6.21	0.91	0.01	0.07	0.34	0.07	4.61	1.90	0.09	0.22	51.3	100.1
A-1-85	34.7	0.07	6.20	0.91	0.04	0.07	0.33	0.05	4.61	2.06	0.09	0.19	51.4	100.7
A-1-85	34.0	0.13	6.30	1.06	0.03	0.08	0.36	0.08	4.43	2.09	0.10	0.27	51.7	100.6
A-1-90	35.0	0.10	6.25	0.81	0.01	0.06	0.30	0.07	4.38	2.37	0.11	0.15	51.3	100.9
A-1-90	34.5	0.14	6.27	0.92	0.01	0.05	0.35	0.03	4.37	2.30	0.10	0.18	51.3	100.5
A-1-90	34.5	0.13	6.25	0.91	0.03	0.06	0.32	0.09	4.39	2.09	0.10	0.25	52.4	101.5
A-1-90	34.7	0.10	6.16	0.87	0.03	0.05	0.32	0.05	4.32	2.26	0.10	0.25	51.6	100.8
A-1-90	34.6	0.13	6.25	0.89	0.05	0.04	0.32	0.07	4.39	2.30	0.11	0.18	51.4	100.7
A-1-90	34.6	0.13	6.27	0.83	0.05	0.06	0.30	0.01	4.43	2.38	0.11	0.20	51.4	100.8
A-1-90	34.5	0.12	6.22	0.87	0.00	0.05	0.35	0.07	4.37	2.16	0.11	0.16	52.0	100.9
A-1-90	34.4	0.13	6.10	0.89	0.02	0.05	0.34	0.05	4.53	2.25	0.12	0.16	52.1	101.1
A-1-90	34.6	0.15	6.16	0.86	0.03	0.05	0.34	0.09	4.45	2.15	0.10	0.16	51.9	101.0
A-1-90	34.8	0.09	6.25	0.81	0.05	0.05	0.36	0.08	4.68	1.96	0.11	0.17	51.5	100.9
A-1-90	34.9	0.10	6.26	0.94	0.00	0.07	0.34	0.03	4.34	2.18	0.09	0.20	51.7	101.2
A-1-90	34.7	0.14	6.17	0.83	0.01	0.05	0.32	0.05	4.25	2.30	0.10	0.18	51.6	100.6
A-1-90	34.5	0.15	6.22	0.84	0.03	0.06	0.34	0.08	4.43	2.14	0.11	0.15	51.6	100.7
A-1-90	34.6	0.12	6.26	0.85	0.05	0.05	0.35	0.06	4.48	2.29	0.10	0.18	51.4	100.8
A-1-90	34.8	0.12	6.24	0.91	0.05	0.05	0.33	0.05	4.43	2.09	0.10	0.22	51.8	101.2
A-1-90	34.9	0.13	6.21	0.86	0.03	0.06	0.34	0.05	4.54	2.13	0.10	0.20	52.0	101.5
A-1-90	34.5	0.13	6.19	0.83	0.03	0.05	0.34	0.00	4.19	2.12	0.10	0.21	52.4	101.1
A-1-90	35.0	0.11	6.12	0.86	0.05	0.05	0.34	0.06	4.64	1.94	0.11	0.17	51.3	100.7
A-1-90	34.7	0.12	6.30	0.92	0.03	0.07	0.34	0.05	4.64	2.11	0.11	0.22	50.7	100.3
A-1-90	34.6	0.14	6.27	0.89	0.04	0.06	0.33	0.04	4.62	1.94	0.11	0.19	51.8	101.1

Individual Shard Analyses - Oxides

Sample	SiO2	TiO2	Al2O3	Fe2O3	MnO	MgO	CaO	BaO	Na2O	K2O	Cl	F	Oxide sum	H2O	–O	Total
A-1-85	73.8	.16	11.8	1.18	.06	.09	.49	.09	2.8	5.6	.09	0.21	96.4	4.9	0.11	101.2
A-1-85	73.5	.16	11.8	1.22	.04	.09	.49	.07	3.0	5.2	.09	0.26	95.9	6.3	0.13	102.1
A-1-85	72.6	.18	11.6	1.22	.04	.10	.47	.00	2.8	5.5	.08	0.24	94.8	5.4	0.12	100.1
A-1-85	74.0	.20	11.7	1.21	.07	.08	.47	.04	3.3	5.3	.10	0.21	96.7	5.0	0.11	101.6
A-1-85	73.4	.22	11.8	1.20	.04	.09	.48	.07	2.7	5.4	.11	0.28	95.8	5.9	0.14	101.6
A-1-85	73.5	.23	11.9	1.22	.02	.11	.47	.08	2.8	5.3	.11	0.20	95.9	5.7	0.11	101.5
A-1-85	73.0	.18	11.6	1.16	.02	.10	.46	.04	2.7	5.5	.11	0.15	95.0	5.8	0.09	100.7
A-1-85	73.3	.17	11.6	1.19	.01	.07	.47	.04	2.6	5.5	.11	0.19	95.3	5.2	0.11	100.3
A-1-85	74.2	.20	11.9	1.21	.08	.10	.44	.03	3.0	5.3	.11	0.20	96.8	4.8	0.11	101.5
A-1-85	74.0	.19	11.9	1.26	.08	.10	.45	.09	2.8	5.3	.11	0.18	96.5	5.0	0.10	101.4
A-1-85	73.2	.20	11.6	1.25	.01	.07	.45	.08	2.8	5.5	.11	0.18	95.5	5.0	0.10	100.4
A-1-85	73.4	.16	11.8	1.24	.02	.11	.47	.10	2.9	5.4	.11	0.18	95.9	5.2	0.10	101.0
A-1-85	73.7	.17	11.7	1.23	.03	.11	.50	.06	2.8	5.4	.12	0.15	96.0	5.2	0.09	101.1
A-1-85	73.7	.17	11.8	1.32	.06	.11	.48	.12	2.9	5.3	.12	0.18	96.3	6.0	0.10	102.2
A-1-85	74.8	.25	11.9	1.25	.06	.10	.45	.07	0.5	2.8	.10	0.26	92.5	7.3	0.13	99.7
A-1-85	73.7	.22	11.8	1.27	.03	.10	.48	.06	2.8	5.6	.10	0.21	96.4	4.9	0.11	101.2
A-1-85	72.6	.22	11.7	1.33	.07	.08	.47	.11	2.2	5.2	.10	0.21	94.3	6.4	0.11	100.6
A-1-85	73.6	.18	11.8	1.30	.06	.08	.46	.00	2.9	5.4	.13	0.18	96.1	5.8	0.11	101.8
A-1-85	73.6	.08	11.8	1.28	.07	.10	.45	.06	2.9	5.4	.09	0.23	96.1	5.6	0.12	101.5
A-1-85	73.3	.14	11.7	1.31	.01	.11	.47	.08	2.6	5.6	.09	0.22	95.6	5.2	0.11	100.7
A-1-85	74.3	.11	11.7	1.31	.05	.11	.46	.06	2.8	5.6	.09	0.19	96.8	4.6	0.10	101.3
A-1-85	72.8	.22	11.9	1.52	.03	.13	.50	.09	2.8	5.3	.10	0.27	95.7	5.7	0.14	101.2

Individual Shard Analyses - Oxides

Sample	SiO2	TiO2	Al2O3	Fe2O3	MnO	MgO	CaO	BaO	Na2O	K2O	Cl	F	Oxide sum	H2O	–O	Total
A-1-90	74.9	.17	11.8	1.15	.01	.10	.42	.08	3.2	5.3	.11	0.15	97.4	4.1	0.09	101.4
A-1-90	73.8	.24	11.8	1.31	.02	.09	.49	.03	3.1	5.3	.10	0.18	96.5	4.6	0.10	101.0
A-1-90	73.8	.22	11.8	1.30	.03	.09	.45	.10	2.8	5.3	.10	0.25	96.2	6.1	0.13	102.2
A-1-90	74.2	.17	11.6	1.24	.04	.07	.45	.06	3.0	5.2	.10	0.25	96.4	5.0	0.13	101.3
A-1-90	74.0	.22	11.8	1.27	.06	.07	.45	.08	3.1	5.3	.11	0.18	96.6	4.7	0.10	101.2
A-1-90	74.1	.22	11.8	1.19	.06	.10	.42	.02	3.2	5.3	.11	0.20	96.7	4.7	0.11	101.3
A-1-90	73.8	.19	11.8	1.24	.00	.08	.49	.08	2.9	5.3	.11	0.16	96.2	5.6	0.09	101.7
A-1-90	73.5	.22	11.5	1.28	.03	.08	.47	.06	3.0	5.5	.12	0.16	95.9	5.9	0.09	101.7
A-1-90	74.0	.24	11.6	1.23	.04	.08	.47	.10	2.9	5.4	.10	0.16	96.3	5.4	0.09	101.6
A-1-90	74.4	.16	11.8	1.16	.07	.08	.50	.08	2.6	5.6	.11	0.17	96.7	4.7	0.10	101.3
A-1-90	74.6	.16	11.8	1.34	.00	.11	.48	.04	2.9	5.2	.09	0.20	96.9	4.8	0.11	101.6
A-1-90	74.1	.24	11.7	1.19	.01	.07	.44	.05	3.1	5.1	.10	0.18	96.3	5.0	0.10	101.2
A-1-90	73.8	.25	11.8	1.19	.04	.09	.47	.08	2.9	5.3	.11	0.15	96.2	5.1	0.09	101.2
A-1-90	74.1	.20	11.8	1.22	.06	.09	.49	.06	3.1	5.4	.10	0.18	96.8	4.6	0.10	101.3
A-1-90	74.4	.20	11.8	1.30	.06	.07	.46	.06	2.8	5.3	.10	0.22	96.8	5.0	0.12	101.7
A-1-90	74.7	.22	11.7	1.22	.04	.09	.47	.05	2.9	5.5	.10	0.20	97.2	5.0	0.11	102.1
A-1-90	73.8	.22	11.7	1.19	.04	.08	.47	.00	2.9	5.0	.10	0.21	95.7	6.2	0.11	101.8
A-1-90	74.8	.19	11.6	1.22	.06	.08	.47	.07	2.6	5.6	.11	0.17	97.0	4.3	0.09	101.2
A-1-90	74.1	.21	11.9	1.31	.04	.11	.47	.05	2.8	5.6	.11	0.22	96.9	3.8	0.12	100.6
A-1-90	74.1	.23	11.8	1.27	.06	.09	.46	.05	2.6	5.6	.11	0.19	96.6	5.2	0.10	101.7

Sample Averages - Elemental

Sample	Si	Ti	Al	Fe	Mn	Mg	Ca	Ba	K	Na	Cl	F	O	Total
A-1-85	34.4	0.11	6.23	0.88	0.03	0.06	0.34	0.06	4.39	2.01	0.10	0.21	51.7	100.5
A-1-90	34.7	0.12	6.22	0.87	0.03	0.05	0.33	0.05	4.44	2.17	0.10	0.19	51.7	100.9

Sample Averages - Oxide

Sample	SiO2	TiO2	Al2O3	Fe2O3	MnO	MgO	CaO	BaO	Na2O	K2O	Cl	F	sum	H2O	–O	Total
A-1-85	73.5	.18	11.8	1.26	.04	.10	.47	.07	2.7	5.3	.10	0.21	95.7	5.5	0.11	101.1
A-1-90	74.2	.21	11.8	1.24	.04	.09	.47	.06	2.9	5.4	.10	0.19	96.7	5.0	0.10	101.6

APPENDIX 2F

Clarification of PSHA Formulation

(6 pages plus Figures C-1, C-2, and C-3)

CLARIFICATION OF PSHA FORMULATION

PSHA Formulation for Ground Motion Hazard

Equation **(6-2)** of the text, repeated below, is the basic equation used in computing the ground shaking hazard. The hazard is expressed as the frequency of exceeding a specified level of ground motion, $\nu(z)$, where z is the ground motion level. Given a *known* set of models and model parameters for representing the frequency of earthquake occurrence, the randomness of size and location of future earthquakes, and the randomness in the level of ground motion they may produce at the site, $\nu(z)$ is computed by the expression:

$$\nu(z) = \sum_n \alpha_n(m^0) \int_{m^0}^{m^u} f(m) \left[\int_0^{\infty} f(r|m) \cdot P(Z > z|m,r) \cdot dr \right] \cdot dm \qquad \textbf{(6-2)}$$

where $\alpha_n(m^0)$ is the frequency of all earthquakes on source n above a minimum magnitude of engineering significance, m^0; $f(m)$ is the probability density of earthquake size between m^0 and a maximum earthquake the source can produce, m^u; $f(r|m)$ is the probability density function for distance to an earthquake of magnitude m occurring on source n; and $P(Z>z|m,r)$ is the probability that, given an earthquake of magnitude m at distance r from the site, the peak ground motion will exceed level z.

However, the models and model parameters of Equation **(6-2)** are not known with certainty. They depend upon the collective set of scientific judgments and data interpretations documented in the PSHA report. These can be represented by a set of parameters Θ. The elements of Θ include all of the parameters of Equation **(6-2)**, together with the specific interpretations that lead to those parameters. The uncertainty in Θ is characterized using the logic trees shown on Figures 6-3 and 6-5 of the PSHA report. Each end branch at the right hand side of the log tree defines a specific set of input parameters, θ_i that can be used to compute the hazard using Equation **(6-2)**. The result is a frequency of exceeding ground motion level z that is conditional on θ_i, $\nu(z|\theta_i)$ and Equation **(6-2)** can be rewritten as:

$$\nu(z|\theta_i) = \sum_n \alpha_n(m^0|\theta_i) \int_{m^0}^{m^u|\theta_i} f(m|\theta_i) \left[\int_0^{\infty} f(r|m,\theta_i) \cdot P(Z > z|m,r,\theta_i) \cdot dr \right] \cdot dm \qquad \textbf{(C-1)}$$

The probability that Θ will take on any particular value θ_i is equal to the joint probability of the set of parameters θ_i being the true parameter values. $P(\Theta = \theta_i)$ is obtained by multiplying the probabilities on all of the branches leading to θ_i:

$$P(\Theta = \theta_i) = \prod_k P(branch_k \mid branch_1 \cdots branch_{k-1}) \qquad \text{(C-2)}$$

where $P(branch_k \mid branch_1 \ldots branch_{k-1})$ is the probability that a specific branch at node k is the correct branch conditional on all of the branches leading to node k represent the correct path through the logic tree.

As a result of computing the hazard for each end branch of the logic tree, a discrete distribution for $\nu(z \mid \Theta)$ is obtained. The expected or mean value of $\nu(z \mid \Theta)$ is given by:

$$E[\nu(z \mid \Theta)] = \sum_i \nu(z \mid \theta_i) \cdot P(\Theta = \theta_i) \qquad \text{(C-3)}$$

and the fractiles of the distribution are obtained by ordering the values of $\nu(z|\theta_i)$ and computing the sum of $P(\Theta = \theta_i)$ until the desired fractile levels are reached.

PSHA Formulation for Fault Displacement Hazard

The formulation for probabilistic evaluation of the hazard from fault displacement is analogous to that developed for the hazard from ground shaking. The fault displacement PSHA provides the frequency of exceeding a specified level of displacement, $\nu(d)$, where d is the amount of fault displacement. Equation (7-1) in the PSHA report presents the basic hazard formulation is its simplest terms:

$$\nu(d) = \lambda_{DE} \cdot P(D > d) \qquad \text{(7-1)}$$

where λ_{DE} is the frequency of displacement events and $P(D>d)$ is the conditional probability that the displacement in a single event will exceed value d. The exact form of Equation (7-1) used in the calculation depends upon whether the *earthquake approach* or the *displacement approach* is being used.

For the earthquake approach, λ_{DE} is given by Equation (7-3) in the PSHA report:

$$\lambda_{DE} = \sum_{j=1}^{n} \lambda_j(\text{Events on source } j) \times P_i(\text{Slip}|\text{Event on source } j) \qquad \textbf{(7-3)}$$

where P_i(Slip|Event on j) is the probability of slip at point i due to an earthquake on source j, given by Equations (7-4) and (7-5) in the PSHA report, and λ_j is the frequency of earthquakes of different sizes and at different locations from Equation (6-2). Thus, using Equations (6-2) and (7-3), Equation (7-1) is recast as:

$$v(d) = \sum_j \alpha_j(m^0) \int_{m^0}^{m^*} f(m) \left[\int_0^{\infty} f(r|m) \cdot P(\text{slip}|m,r,h) \cdot P(D > d|m,r) \cdot dr \right] \cdot dm \qquad \textbf{(C-4)}$$

Because both P_i(Slip|Event on j) and $P(D>d)$ vary with earthquake magnitude and source-to-site distance, they are included within the magnitude and distance integrals. [Note that for ground motion hazard, the analogous probability, P_i(Shaking|Event on j), is equal to 1.0 because it is assumed that every earthquake will produce some level of shaking at a site, though the level may be very small.] As was the case for Equation (6-2), incorporating the uncertainty in the models and parameters leads to the displacement hazard form of Equation (C-1) for the earthquake approach:

$$v(d|\theta_i) = \sum_j \alpha_j(m^0|\theta_i) \int_{m^0}^{m^*|\theta_i} f(m|\theta_i) \left[\int_0^{\infty} f(r|m,\theta_i) \cdot P(\text{slip}|m,r,h,\theta_i) \cdot P(D > d|m,r,\theta_i) \cdot dr \right] \cdot dm \qquad \textbf{(C-5)}$$

where again, θ_i represents a specific set of models and model parameters used to compute the hazard.

For the displacement approach using fault slip rate, the formulation is much simpler, with λ_{DE} given by Equation (7-2) in the PSHA report and $P(D>d)$ dependent on the average displacement per event, $\bar{D}_E$, and the form of the distribution for $D/\bar{D}_E$. Incorporating uncertainty in the models and parameters leads to displacement hazard form of Equation (C-1) for the displacement approach:

$$v(d|\theta_i) = \frac{SR|\theta_i}{\bar{D}_E|\theta_i} + P\left(D > d \middle| \bar{D}_E, \theta_i \right) \qquad \textbf{(C-6)}$$

The mean hazard integrated over the uncertainty in Θ is computed using Equation (C-3).

Probability of Distributed Slip for Earthquake Approach to Fault Displacement Hazard

For the distributed faulting approach, the probability that an earthquake on source j will cause distributed slip on the feature at point i is computed using the logistic regression model of Equation (7-4) in the PSHA report:

$$P_i(\text{Slip} \mid \text{Event on } j) = \frac{e^{f(m,r)}}{1+e^{f(m,r)}} \qquad \textbf{(7-4)}$$

where $f(m,r)$ is given by Equation (7-5) in the PSHA report

$$f(m,r,h,\tau) = 3.27 + (-8.28 + 0.577m + 0.629h) \cdot \ln(r + 4.14) + 0.611\tau \qquad \textbf{(7-5)}$$

in which h is 1.0 if the site lies in the hanging wall of the rupture and 0.0 if the site lies in the foot wall, and τ is a random variate with 0 mean and unit variance that accounts for variability from earthquake to earthquake. When Equation (7-5) is used to compute the probability of distributed slip, the mean value of P_i(Slip|Event on j) is found by integrating over the random effect distribution. Figure C-1 shows the variation in the predicted probability of distributed rupture for a magnitude 6.5 earthquake as the random effect τ is varied from –1.22 to +1.22, corresponding to a $\pm$ 2 standard deviation range for a normal variate which encompasses 95% of the probability mass. Note that the curves shown on Figure C-1 represent a balance between the data with non zero densities of distributed faulting and the larger mass of data with observed zero density of distributed faulting show by the data points at the bottom of the plots.

The general form of Equation (7-5) was developed as part of the seismic hazard assessment for Yucca Mountain (CRWMS M&O, 1998, Appendix H). The relationship preferred by the majority of the experts was:

$$f(m,r,h) = 2.06 + (-4.62 + 0.118m + 0.682h) \cdot \ln(r + 3.32) \qquad \textbf{(C-7)}$$

During application of the displacement hazard methodology in a subsequent project for the Los Alamos National Laboratory (Olig and others, 1998) it was suggested that the distributed faulting data may be more scattered than represented by the form of Equation (C-7) and that a *random effects* model might provide a better fit. Hosmer and Lemeshow (1989, page 141) define a goodness of fit statistic, $\hat{C}$, for logistic regression in the form of a Pearson χ^2 statistic for a table of observed and predicted frequencies. Using this approach, Olig and others (1998) found a goodness of fit statistic, $\hat{C}$, for Equation (C-7) of 317 with a p-value of 0.00, indicating that the data are more scattered than expected for the model.

The suggested improvement in the model was adding a random effect term, $\gamma\tau_i$, to Equation (C-7) to represent variability from earthquake to earthquake resulting from unknown variables (e.g. Brillinger and Preisler, 1983). Parameter τ_i is a normal variate with 0 mean and unit variance representing a random effect for the ith event, and γ is a parameter estimated from the data that defines the magnitude of this variation. Brillinger and Preisler (1983) present a general approach for estimating the coefficients of a random effects model using maximum likelihood combined with Gaussian quadrature. Applying this method, Olig and others obtained Equation (7-5). The resulting goodness of fit statistic, $\hat{C}$, was 8.4 with a p-value of 0.68, indicating a large improvement in the model. Thus, it was judged that the use of Equation (7-5) from Olig and others (1998) rather than Equation (C-7) from the Yucca Mountain study was warranted for computing the displacement hazard at the Skull Valley site.

Figure C-2 compares the predicted probabilities of distributed slip obtained using Equation (C-7) to those obtained using Equation (7-5) with the random effect set to zero. The values obtained using Equation (C-7) are much less sensitive to earthquake magnitude. Figure C-3 shows the effect on the computed displacement hazard of using Equation (C-7) instead of (7-5). At a displacement of 1 cm, there is about a factor of two increase in the frequency of exceedance. The difference between the two results decreases as the displacement level increases. The difference between the two results is primarily due to the lower rate of attenuation of the predicted probabilities of distributed slip from Equation (C-7), which results in a greater contribution from events at larger distances. Because of the attenuation in the amount of slip with distance, these events contribute more to the hazard for small displacements than large displacements. The resulting mean hazard curve using Equation (C-7) in the earthquake approach remains

near or below the hazard computed using the preferred displacement approach. Thus, the overall effect on the total hazard is small.

References

Brillinger, D.R., and Preisler, H.K., 1983, Maximum likelihood estimation in a latent variable problem: *in* Studies in Econometrics, Time Series, and Multivariate Statistics: S. Karlin, T. Amemiya, and L.A. Goodman (eds.), Academic Press, New York, p. 31-65.

Hosmer, D.I., and Lemeshow, S. 1989, *Applied Logistic Regression*, John Wiley & Sons, New York, 307 p.

Olig, S., Youngs, R., and Wong, I., 1998, Probabilistic seismic hazard analysis for surface fault displacement at TA-3, Los Alamos National Laboratory: report prepared for Los Alamos National Laboratory, University of California, 7, July.

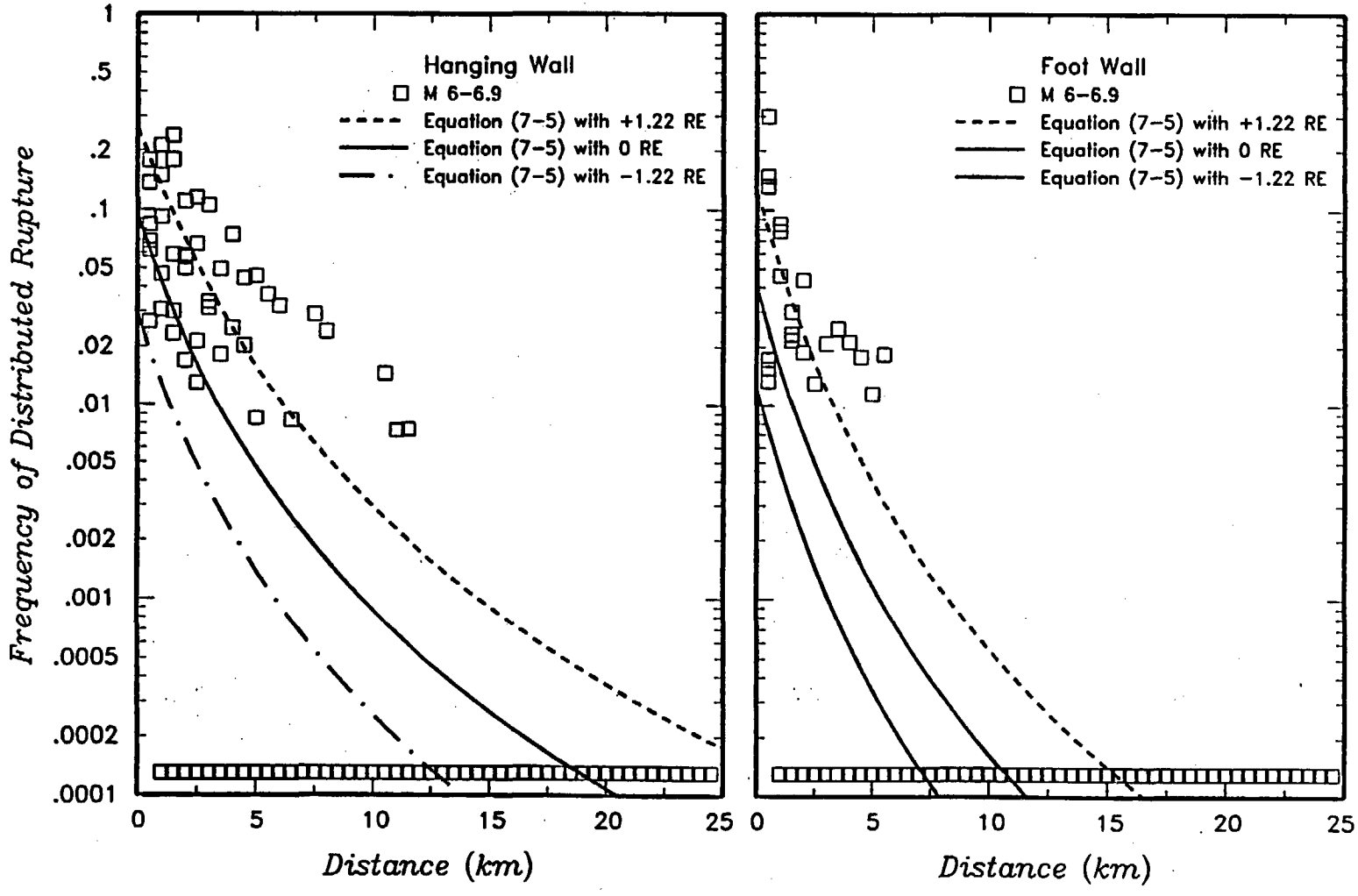

Figure C-1 Range of prediced probability of distributed rupture for magnitude 6.5 earthquakes due to +/- 2 standard deviations in the random effect

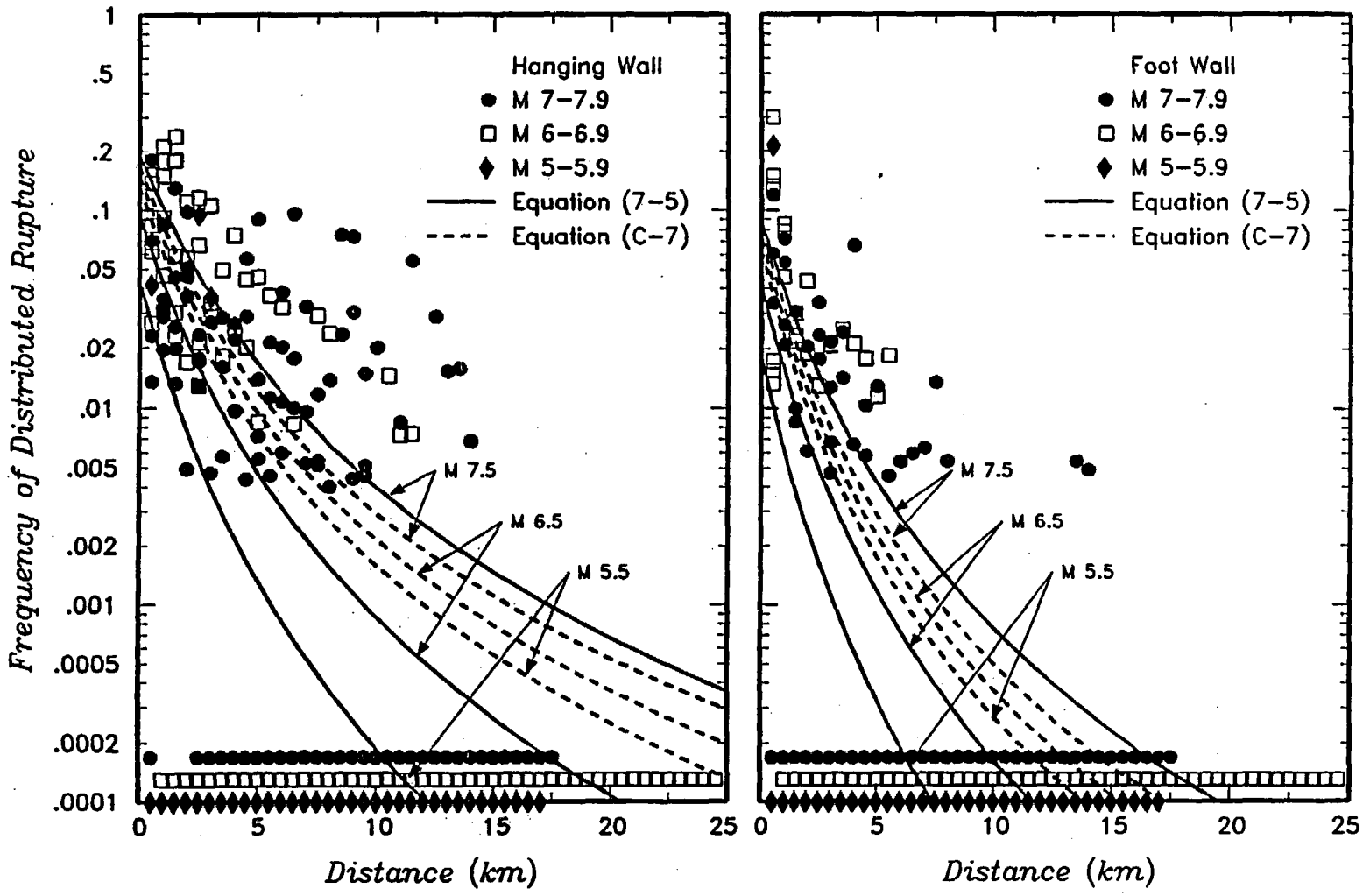

Figure C–2 Comparison of prediced probability of distributed rupture

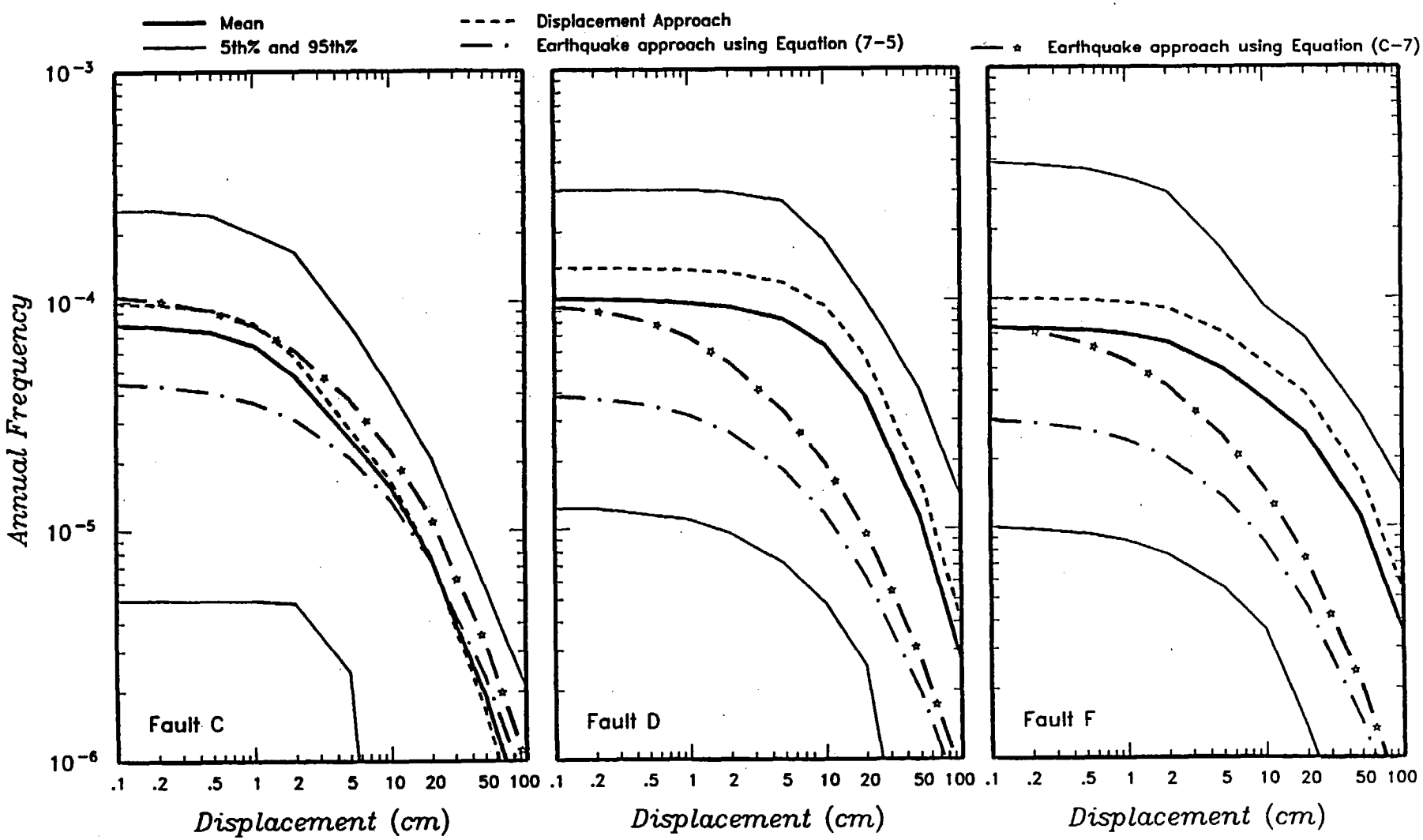

Figure C-3 Comparison of earthquake approach displacement hazard computed using Equation (C-7) with results presented on Figure 7-9 of PSHA report

APPENDIX 2G

Additional Seismic Evaluations
(9 Pages)

Appendix 2G of previous revisions of the SAR (based on 0.528g horizontal and vertical design basis ground motions) discussed two issues with respect to the ground motion assessment for the Skull Valley site.

The first issue concerns new information about the East Great Salt Lake fault. The conclusion reached in previous SAR revisions was that an increase in the slip rate for that fault would have no significant impact on defining the 2,000-year return period ground motions for the Skull Valley site. The current revision of the SAR revises the 2,000-year return period ground motions for the site based on revisions to the ground motion models for the site. Because no changes were made to the seismic source model, the relative effect of increases in the rate of activity of the East Great Salt Lake fault on site ground motions is unaffected by the revisions to the ground motion models for the site.

The second issue concerns the impact of coseismic rupture of the Stansbury, East and/or West faults of site ground motions. The conclusion reached in previous SAR revisions was that including coseismic rupture would result in a slight decrease in the 2,000-year return period ground motions for the Skull Valley site. This conclusion was based on scaling upward the median and standard deviation of the ground motion models for the site to represent a coseismic rupture and computing the increased conditional probability of exceeding the 2,000-year return period ground motion. This was offset by the reduced frequency of events. The current revision to the SAR uses revised ground motions models for the site. The impact of these models would be to change the starting ground motion level for the assessment of coseismic rupture but would have little impact on the relative effects.

Thus, it is concluded that the conclusions presented in Appendix 2G of previous revisions of the SAR, which follows and has not been revised, remain valid.

Additional Seismic Evaluations

NEW INFORMATION ON THE EAST GREAT SALT LAKE FAULT

Results from the interpretation of recent high resolution seismic survey information across the Great Salt Lake fault indicate multiple Holocene earthquakes on the East Great Salt Lake fault (Dinter and Pechmann, 1999a, b). Specifically, Dinter and Pechmann (1999a, b) report an average vertical slip rate for the Holocene East Great Salt Lake fault of 1 mm/yr (average return period of 3,000 to 6,000 yrs). This fault may link with the Oquirrh fault and possibly with the Oquirrh, Topliff-Mercur Hills faults to form a large Wasatch-scale fault zone. PFS has evaluated this new information on the East Great Salt Lake fault to determine the impact, if any, on PFSF seismic hazard.

In the PSHA analysis for the PFSF (Geomatrix Consultants, Inc., 1999a), the source characterization for the East Great Salt Lake (EGSL) fault included two alternatives. The first alternative (weighted 0.9) was that the EGSL fault is independent of the Oquirrh fault. The second alternative (weighted 0.1) was that the EGSL fault is linked with the Oquirrh fault to form a single seismic source. Thus, the existing model accounts for the linkage. The maximum magnitudes assessed for the EGSL fault and the linked EGSL-Oquirrh faults are similar to those assessed for the Wasatch fault (see Figure 6-6 of Geomatrix Consultants, 1999a). Thus, the existing model accounts for the potential scale of the EGSL fault. The mean slip rates for the EGSL fault in the existing model is 0.38 mm/year. If one assumes that the mean slip rate is 1 mm/year for the EGSL fault, then the hazard (frequency of exceedance) from this fault would be increased by a factor of approximately 3. The EGSL fault is located approximately 60 km from the PFSF site. At this distance, the fault has a very small contribution to the total hazard (see Figure 6-12 of Geomatrix Consultants,

1999a). At the 2,000-year return period ground motion level, the EGSL fault contributes <0.01% of the frequency of exceedance for peak ground acceleration (PGA) and 0.2% of the frequency of exceedance for 1.0-second spectral acceleration (SA). If one increases the mean slip rate for the EGSL fault by a factor of 3, then the total frequency of exceedance for 1.0-second SA would increase by a factor of 1.004 at the 2,000-year return period ground motion level. This would result in a 0.2% change in the 2,000-year return period spectral acceleration.

In conclusion, the new information on the East Great Salt Lake fault has negligible impact on the hazard at the PFSF.

CO-SEISMIC RUPTURE OF THE STANSBURY FAULT WITH THE EAST FAULT, WEST FAULT, OR EAST-WEST COMBINED FAULT

Co-seismic rupture of the East and West faults with the Stansbury fault during the most recent event on the Stansbury fault is not supported by geomorphic and geologic relationships. The age of the most recent event along the Stansbury fault is estimated to be early to middle Holocene (~ 8 ± 2 thousand years old) based on the displacement of a relatively young alluvial terrace surface at the mouth of Antelope Canyon. A significant scarp-forming event on either the East or West faults during this period of time should be recognizable in the present topography. The East and West faults in the site area are overlain by latest Pleistocene lacustrine deposits that were deposited as the lake receded from the Provo shoreline (~ 14.5 to 14.2 thousand years old) to the Gilbert shoreline (~ 11 to 10 thousand years old). Erosion that occurred during the recession of the lake from the Provo to Gilbert shorelines possibly could have eliminated pre-existing fault scarps. Significant fault scarps (greater than approximately ½ m) formed after the lake receded to the Gilbert shoreline likely would not be completely

eroded or obscured by deposition in the site area. No such scarps are identified along either the East or West faults, suggesting that there has been no significant displacement on these faults during the past 10 to 11 thousand years.

Geometric relationships suggest that the faults are independent structures. The East fault in the vicinity of the site lies between 5 to 9 km from the main trace of the Stansbury fault. Within the ranges of fault dips expected for these faults, the faults do not intersect within the upper seismogenic crust. Based on these geometric relationships and lack of evidence to suggest that these faults have ruptured co-seismically, these faults were considered as independent structures in the current PFSF seismic hazard model. Although we cannot preclude the possibility that the Stansbury fault could rupture co-seismically with the East and/or West faults, we judge this event to be highly unlikely. Analog data for historical moderate to large magnitude normal faulting earthquakes suggest that co-seismic rupture (simultaneous release of comparable levels of seismic energy on both faults) of subparallel normal faults separated by 5 or more kilometers is rare, having been clearly documented in only one earthquake, the 1959 Hebgen Lake, Montana earthquake. During this earthquake, two west-dipping faults separated by up to as much as 5 km ruptured co-seismically.

The effect of co-seismic rupture of subparallel faults on ground motions can be evaluated using the results of studies conducted for the proposed commercial nuclear waste repository at Yucca Mountain, Nevada. The assessments of the Yucca Mountain Ground Motion Expert Panel formed the basis for selecting the ground motion models used to assess ground motion hazard at the Skull Valley PFSF site (Geomatrix Consultants, 1999a). The experts also assessed the effects of simultaneous multiple-fault ruptures on ground motions. The effects were expressed as an increase in the median level, expressed as a multiple of the median; and/or an increase in the standard error, expressed as either a multiple of the standard error or an additional error incorporated using the square

root of the sum of the squares (SRSS). The following table summarizes the assessments of the Ground Motion experts for peak ground acceleration (PGA).

Adjustment Factors for Multiple Rupture on Two Faults
Developed by Yucca Mountain Project Expert Panel
For Horizontal Peak Ground Acceleration
(From Tables 6-3 through 6-9 of CRWMS M&O, 1998)

Yucca Mountain Ground Motion Expert	Scale Factor for Median	Scale Factor for Standard Error	Additional Standard Error (SRSS)	Additional Standard Error in Median (SRSS)
J.G. Anderson	1.20	1.0		
D.M. Boore	1.25	1.0		
K.W. Campbell	1.0	1.2		
A. McGarr	1.0	1.2		
W.J. Silva	1.29	1.0		
P.G. Somerville	1.63	1.29*	0.3	0.2
M.C. Walck	1.28	1.03*		0.1

*Computed from additional error using an average standard error of 0.44 for the natural log of peak acceleration.

In the above table, the effects on the standard error assessed by P.G. Somerville and M.C. Walck were converted to a scale factor using a standard error of 0.44 for the natural log of peak acceleration. This is the average standard error in PGA specified by the ground motion attenuation relationships used by the experts for a magnitude **M** ~7 earthquake. Thus, the standard error factor for P.G. Somerville is equal to $\sqrt{0.44^2 + 0.3^2 + 0.2^2} / 0.44 = 0.57/0.44 = 1.29$.

The above table also includes the effect of simultaneous rupture on the magnitude of the earthquake. The approach used in the Yucca Mountain study was to combine the moments of the individual fault ruptures to obtain the moment of the combined rupture. Using the definition of moment magnitude **M** =

2/3log(M_o)-10.7, the combined moments for **M** 6.5 and 7 earthquakes (the expected maximum magnitudes on the East and Stansbury faults, respectively), one obtains a magnitude **M** 7.05 for a combined rupture.

The average effect is a scale factor of 1.22 for the median (computed as the geometric mean of the 7 factors because of the lognormal distribution for peak acceleration) and a scale factor of 1.10 for the standard error. Thus, if it is assumed that the maximum magnitude earthquakes occurred simultaneously on the East and Stansbury faults, the estimated median PGA would be a factor of 1.22 times the median value obtained for the same magnitude earthquake occurring on a single fault and the 84th-percentile PGA would be a factor of approximately 1.28 times the 84th-percentile value obtained for the same magnitude earthquake occurring on a single fault. These adjustments would have to be weighted by the evaluation of the probability that such an event could occur. As discussed above, it is judged highly unlikely that the two faults could rupture simultaneously with large earthquakes. For example, if the assessed probability was 0.1, then, the weighted deterministic estimates of the median and 84th percentile PGA would be factors of 1.02 and 1.03 times those for the same magnitude earthquake occurring on a single fault.

The effect of potential co-seismic rupture of both faults on the assessment of the hazard at the PFSF site can be assessed by examining the results of the seismic hazard analysis conducted for the Yucca Mountain Project (CRWMS M&O, 1998). The seismic source characterization expert teams included the possibility of co-seismic rupture on parallel faults in their characterization of seismic sources. The sensitivity analyses presented in figures in Section 7 of CRWMS M&O (1998) gives an indication of the effect of co-seismic rupture on the annual probability of exceedance. Figure 7-31 shows the sensitivity for the AAR team. The alternatives shown are for 1, 2, 3, or four coalesced faults at Yucca Mountain. If there are four, then each is an independent source. If there are less

than four, then co-seismic rupture occurs on multiple parallel fault traces. The results indicate lower hazard for cases of co-seismic rupture than for independent sources. Figure 7-65 shows the sensitivity for the AAR team. The alternatives shown are the faults always rupture independently or the faults occasionally rupture simultaneously. The results indicate lower hazard for cases of occasional simultaneous rupture than for always independent rupture. Figure 7-85 shows the sensitivity for the DFS team. The alternatives shown are the faults always rupture independently or the faults rupture simultaneously with distributed ruptures. The results indicate lower hazard for cases of distributed simultaneous rupture than for independent rupture. Figure 7-109 shows the sensitivity for the RYA team. The RYA team defined three alternatives for coalesced faults: three independent sources; two independent sources, with rupture on one consisting of co-seismic rupture on two parallel faults; and a single source, with rupture consisting of co-seismic rupture on three parallel faults. Three independent sources produces higher hazard at low ground motion levels. However, at high ground motion, the single source with parallel ruptures on multiple faults produces larger hazard. The SBK time considered the possibility of simultaneous ruptures on parallel faults in their hazard model, but sensitivity analyses are not shown in CRWMS M&O (1998). The SDO team did not consider simultaneous ruptures as an alternative, but rather as an additional source of earthquakes.

In general, the sensitivity analyses presented in CRWMS M&O (1998) indicate that considering parallel faults to rupture co-seismically produces lower hazard than considering them to produce independent earthquakes. The reduction in hazard occurs because, although the ground motions produced by the simultaneous, multiple-fault rupture is larger, the number of independent earthquakes affecting the site is reduced. This effect can be illustrated by the following evaluation of a co-seismic rupture of the two largest faults (Stansbury and East fault).

Based on the source characterization presented in Geomatrix Consultants (1999a) expected maximum magnitudes on the Stansbury and East faults are **M** 7 and 6.5, respectively. Events this size and larger on each fault have expected frequencies of occurrence of approximately 3×10^{-4} per year. The median PGA at the PFSF site for an **M** 6.5 on the East fault is 0.44g (Geomatrix Consultants, 1999b). Using a standard error of the natural log of PGA of 0.48, an **M** 6.5 earthquake on the East fault has a probability of approximately 0.35 of producing a PGA in excess of 0.528g, the 2,000-year design ground motion. Similarly, the median PGA at the PFSF site for an **M** 7.0 on the Stansbury fault is 0.43g (Geomatrix Consultants, 1999b). Using a standard error appropriate of 0.44 (the average value for **M** 7 earthquakes), an **M** 7.0 earthquake on the Stansbury fault has a probability of approximately 0.32 of producing a PGA in excess of 0.528g. Thus, these two earthquakes contribute $0.35^* 3\times10^{-4} + 0.32^*3\times10^{-4} = 2.02\times10^{-4}$ events per year to the annual frequency of exceeding 0.528g.

If one assumes instead that the maximum earthquakes on the two faults occur as a single co-seismic rupture, the resulting median PGA would be 1.22 times the median ground motion for a magnitude **M** 7.05 earthquake occurring on a single fault. Using the ground motion models presented in Geomatrix (1999a), the median PGA for a M 7.05 earthquake occurring at a closest distance equivalent to the East fault is 0.50g. The median ground motion for a simultaneous rupture would be 1.22*0.50g = 0.61g. Using a standard error of 0.44*1.10 = 0.484, a simultaneous rupture of maximum events on both faults would have a probability of approximately 0.62 of exceeding a PGA of 0.528g. However, the frequency of the combined event is 3×10^{-4} per year, and the event contributes $0.62^*3\times10^{-4} = 1.85\times10^{-4}$ events per year to the annual frequency of exceeding 0.528g. If one assumes that every third rupture on each fault is a co-seismic rupture of both faults, the result is an occurrence frequency of 2×10^{-4} per year for independent

ruptures on the two faults and 1×10^{-4} per year for co-seismic ruptures. The resulting hazard contribution from these events is $0.35^* 2\times10^{-4} + 0.32^*2\times10^{-4} + 0.62^*1\times10^{-4} = 1.96\times10^{-4}$ events per year to the annual frequency of exceeding 0.528g.

Thus, it is expected that consideration of co-seismic ruptures of the Stansbury with the East and West faults in the PHSA would result in a slight decrease in the 2,000-year return period ground motions.

CHAPTER 3

PRINCIPAL DESIGN CRITERIA

TABLE OF CONTENTS

SECTION	TITLE	PAGE
3.1	PURPOSES OF INSTALLATION	3.1-1
3.1.1	Materials to be Stored	3.1-2
3.1.2	General Operating Functions	3.1-2
3.1.2.1	Transportation and Storage Operations	3.1-2
3.1.2.2	On-site Generated Waste Processing, Packaging and Storage	3.1-4
3.1.2.3	Utilities	3.1-4
3.2	STRUCTURAL AND MECHANICAL SAFETY CRITERIA	3.2-1
3.2.1	Dead Load	3.2-4
3.2.2	Live Load	3.2-4
3.2.3	Snow and Ice Loads	3.2-4
3.2.4	Internal/External Pressure	3.2-5
3.2.5	Lateral Soil Pressure	3.2-5
3.2.6	Thermal Loads	3.2-5
3.2.7	Accident Loads	3.2-5b
3.2.8	Tornado and Wind Loadings	3.2-6
3.2.8.1	Applicable Design Parameters	3.2-6
3.2.8.2	Determination of Forces on Structures	3.2-7
3.2.8.3	Ability of Structures to Perform Despite Failure of Structures Not Designed for Tornado Loads	3.2-7
3.2.8.4	Tornado Missiles	3.2-7
3.2.9	Water Level (Flood) Design	3.2-8a

TABLE OF CONTENTS (cont.)

SECTION	TITLE	PAGE
3.2.10	Seismic Design	3.2-10
3.2.10.1	Input Criteria	3.2-10
3.2.10.1.1	Design Response Spectra	3.2-11
3.2.10.1.2	Design Response Spectra Derivation	3.2-11
3.2.10.1.3	Design Time History	3.2-11
3.2.10.1.4	Use of Equivalent Static Loads	3.2-12
3.2.10.1.5	Critical Damping Values	3.2-12
3.2.10.1.6	Basis for Site-Dependent Analysis	3.2-12
3.2.10.1.7	Soil-Supported Structures	3.2-12
3.2.10.1.8	Soil-Structure Interaction	3.2-13
3.2.10.2	Seismic-System Analysis	3.2-13
3.2.10.2.1	Seismic Analysis Methods	3.2-13
3.2.10.2.2	Natural Frequencies and Response Loads	3.2-14
3.2.10.2.3	Procedure Used to Lump Masses	3.2-14
3.2.10.2.4	Rocking and Translational Response Summary	3.2-14a
3.2.10.2.5	Methods Used to Couple Soil with Seismic-System Structures	3.2-14a
3.2.10.2.6	Method Used to Account for Torsional Effects	3.2-15
3.2.10.2.7	Methods for Seismic Analysis of Dams	3.2-15
3.2.10.2.8	Methods to Determine Overturning Moments	3.2-15
3.2.10.2.9	Analysis Procedure for Damping	3.2-15
3.2.10.2.10	Seismic Analysis of Overhead Cranes	3.2-15
3.2.10.2.11	Seismic Analysis of Specific Safety Features	3.2-16
3.2.11	Combined Load Criteria	3.2-16
3.2.11.1	HI-STORM Storage System Load Combinations	3.2-16
3.2.11.2	(deleted)	3.2-19

TABLE OF CONTENTS (cont.)

SECTION	TITLE	PAGE
3.2.11.3	Cask Storage Pad Load Combinations	3.2-21
3.2.11.4	Canister Transfer Building Load Combinations	3.2-25
3.2.11.4.1	Canister Transfer Building Structure	3.2-25
3.2.11.4.2	Canister Transfer Building Foundations	3.2-28
3.2.11.5	Canister Transfer Crane Load Combinations	3.2-30
3.2.12	Lightning	3.2-32
3.3	SAFETY PROTECTION SYSTEMS	3.3-1
3.3.1	General	3.3-1
3.3.2	Protection by Multiple Confinement Barriers and Systems	3.3-3
3.3.2.1	Confinement Barriers and Systems	3.3-3
3.3.2.2	Ventilation Offgas	3.3-4
3.3.3	Protection by Equipment and Instrumentation Selection	3.3-4
3.3.3.1	Equipment	3.3-4
3.3.3.2	Instrumentation	3.3-4
3.3.4	Nuclear Criticality Safety	3.3-5
3.3.4.1	Control Methods for Prevention of Criticality	3.3-5
3.3.4.2	Error Contingency Criteria	3.3-6
3.3.4.3	Verification Analysis	3.3-6
3.3.5	Radiological Protection	3.3-6
3.3.5.1	Access Control	3.3-7
3.3.5.2	Shielding	3.3-7
3.3.5.3	Radiological Alarm Systems	3.3-8
3.3.6	Fire and Explosion Protection	3.3-8
3.3.7	Materials Handling and Storage	3.3-10
3.3.7.1	Spent Fuel Handling and Storage	3.3-10

TABLE OF CONTENTS (cont.)

SECTION	TITLE	PAGE
3.3.7.2	Radioactive Waste Treatment	3.3-10
3.3.7.3	Waste Storage Facilities	3.3-11
3.3.8	Industrial and Chemical Safety	3.3-11
3.4	CLASSIFICATION OF STRUCTURES, SYSTEMS, AND COMPONENTS	3.4-1
3.4.1	Spent Fuel Storage Systems	3.4-3
3.4.1.1	Canister	3.4-3
3.4.1.2	Storage Cask	3.4-3
3.4.1.3	Transfer Cask	3.4-3
3.4.1.4	Lifting devices	3.4-3
3.4.2	Cask Storage Pads	3.4-4
3.4.3	Canister Transfer Building	3.4-4
3.4.4	Canister Transfer Crane	3.4-4
3.4.5	Seismic Support Struts	3.4-4
3.4.6	Design Criteria for Other SSCs Not Important to Safety	3.4-5
3.5	DECOMMISSIONING CONSIDERATIONS	3.5-1
3.6	SUMMARY OF DESIGN CRITERIA	3.6-1
3.7	REFERENCES	3.7-1

TABLE OF CONTENTS (cont.)

LIST OF TABLES

TABLE	TITLE
3.1-1	(deleted)
3.1-2	(deleted)
3.1-3	(deleted)
3.2-1	STRUCTURAL DESIGN CRITERIA FOR THE HI-STORM CANISTER CONFINEMENT BOUNDARY PER ASME NB-3220
3.2-2	STRUCTURAL DESIGN CRITERIA FOR STEEL STRUCTURES OF THE HI-STORM STORAGE CASK AND HI-TRAC TRANSFER CASK PER ASME NF-3260
3.2-3	(deleted)
3.4-1	QUALITY ASSURANCE CLASSIFICATION OF STRUCTURES, SYSTEMS, AND COMPONENTS
3.6-1	SUMMARY OF PFSF DESIGN CRITERIA (5 Sheets)

THIS PAGE INTENTIONALLY LEFT BLANK

CHAPTER 3

PRINCIPAL DESIGN CRITERIA

This chapter identifies the principal design criteria for the Private Fuel Storage Facility (PFSF). The principal design criteria provide a record of design bases derived from 10 CFR 72 and applicable industry codes and standards referenced herein for comparison with the actual design, which is presented in subsequent chapters.

3.1 PURPOSES OF INSTALLATION

The purpose of the PFSF is to provide interim storage for up to 40,000 MTU of pressurized water reactor (PWR) or boiling water reactor (BWR) spent fuel from commercial nuclear power plants throughout the United States.

The PFSF shall utilize canister-based dry cask storage systems, where multiple spent fuel assemblies are stored in a dry inert environment inside a sealed metal canister that is placed inside a storage cask and stored outdoors on a concrete pad. The storage system shall provide physical protection, heat removal, radiation shielding, criticality control, and confinement for the safe storage of spent fuel. The storage systems shall be designed to maintain retrievability of the canister for future removal offsite.

The dry cask storage system used at the PFSF shall be the HI-STORM 100 Cask System (HI-STORM) designed by Holtec International (Holtec). Holtec has submitted a Safety Analysis Report (SAR) to the U.S. Nuclear Regulatory Commission (NRC) for the HI-STORM 100 Cask System (Reference 1). The NRC has issued a Certificate of Compliance for Holtec's HI-STORM 100 storage cask system (Reference 34). The spent fuel will be stored in casks designed in accordance with Certificate of Compliance No. 1014, Amendment 0, for the HI-STORM 100 Storage cask System, modified to incorporate the lid shims and weld modifications described in Holtec Report HI-

2033134, as revised (Reference 35) at pp. 7-14 through 7-16, 8-28, and Figures 26A and 26B.

3.1.1 Materials to be Stored

The PFSF shall be designed to store commercial BWR and PWR spent nuclear fuel with zircaloy or stainless steel cladding including failed fuel, BWR fuel channels, PWR control components, and mixed oxide (MOX) fuel. The spent fuel characteristics from these plants shall be encompassed by the design fuel characteristics that are established by the storage systems used at the PFSF.

The types of fuel to be stored at the PFSF are based on the types of fuel each storage system is licensed to store and PFSF design requirements. A summary of the fuel types that can be stored at the PFSF is shown in Appendix B of the HI-STORM Certificate of Compliance (Reference 34) for the HI-STORM 100 system.

The bounding design fuel characteristics for the PFSF, which are based on the capabilities of the storage system utilized at the PFSF, are summarized in Appendix B of the HI-STORM Certificate of Compliance for the HI-STORM 100 system.

3.1.2 General Operating Functions

3.1.2.1 Transportation and Storage Operations

The PFSF shall be designed to use a passive dry storage technology. Canister transfer and cask placement or removal operations are the major activities.

Prior to receipt at the PFSF, the spent fuel is loaded in a canister at the originating nuclear power plant. The canister is surveyed for contamination, decontaminated if necessary, drained, vacuum dried, filled with helium, and sealed closed prior to shipping. The canister is then loaded into a shipping cask. The shipping cask is protected by impact limiters and mounted on a shipping cradle, and attached to a rail car and shipped to the PFSF.

The PFSF shall be designed to utilize two transport modes to haul the shipping cask from the railroad mainline to the site. The preferred mode is to haul the shipping cask by rail on a railroad line to be constructed from Low Junction to the PFSF. The railroad line and associated equipment shall be designed in accordance with railroad industry standards. The alternate mode is to haul the shipping cask by highway on a heavy haul tractor/trailer from an intermodal transfer point, located next to the railroad mainline 1.8 miles West of Timpie, to the PFSF via Skull Valley Road. The intermodal transfer point shall include the necessary components (crane, rail siding, and truck access area) to accommodate the rail to tractor/trailer transfer.

At the PFSF the canister shall be transferred from the shipping cask to the storage cask. The shipping cask shall be off-loaded from the transport vehicle inside the Canister Transfer Building using an overhead crane and placed in a shielded transfer cell. Once the shipping cask has been opened a transfer cask shall be placed on top of the shipping cask and the canister hoisted up and secured into the transfer cask. The transfer cask shall then be moved by crane onto the top of a storage cask and the canister shall be lowered into the storage cask. The storage cask lid shall be installed and bolted. The storage cask shall then be moved to the cask storage pad using a cask transporter. Storage of the loaded storage cask shall include temperature monitoring and periodic surveillance of the storage casks.

When the fuel is to be shipped offsite, the storage cask shall be moved back into the Canister Transfer Building using the cask transporter. The transfer cask shall be placed on top of the storage cask and the canister lifted up and secured into the transfer cask. The transfer cask shall then be moved by crane onto the top of a shipping cask. The canister shall be lowered into the shipping cask, which shall be closed and shipped offsite.

The PFSF shall be designed with the necessary equipment (such as, the Canister Transfer Building, cranes, cask transporter, storage area) to accommodate shipping cask receipt, canister transfer from the shipping cask to the storage cask, cask transport to and from the storage pads as detailed above with provisions for security, health physics, maintenance, document control, and inventory management.

3.1.2.2 Onsite Generated Waste Processing, Packaging and Storage

The selected canister-based storage systems shall be designed to confine spent fuel within a sealed canister at the originating nuclear power plant. Therefore, handling of spent fuel is not required and no radioactive waste is generated at the PFSF.

Health physics survey material (i.e. smears, disposable clothing) shall be collected, identified, packaged in low level waste (LLW) containers, marked in accordance with 10 CFR 20 requirements, and temporarily stored in the LLW holding cell of the Canister Transfer Building while awaiting shipment to an offsite low-level radioactive disposal facility.

There shall be no other systems or facilities for processing, packaging, storing, or transporting any other type of radioactive waste at the PFSF.

3.1.2.3 Utilities

The PFSF shall be designed to include utilities necessary for facility operation. These utilities include (1) electrical power for operation of equipment, lights, monitoring equipment, communication systems, security systems; (2) backup electrical power for operation of security systems, emergency lights, monitoring equipment, and communication systems; and (3) mechanical systems for operation of fire protection equipment, building HVAC systems, compressed air systems, water supply systems,

and septic systems. Utilities do not need to be classified as Important to Safety unless their function could affect the safe operation of a SSC that is classified as Important to Safety.

THIS PAGE INTENTIONALLY LEFT BLANK

3.2 STRUCTURAL AND MECHANICAL SAFETY CRITERIA

This section of the principal design criteria establishes requirements that satisfy 10 CFR 72.122(b), which identifies the general design criteria that requires structures, systems, and components (SSCs) classified as Important to Safety be designed to withstand the effects of environmental conditions and natural phenomena in their structural and mechanical design. SSCs classified as Important to Safety shall be designed with sufficient capability to withstand the worst-case loads under normal, off-normal, and accident-level conditions such that their capability to perform safety functions is not impaired. Accident-level conditions include credible accidents, natural phenomena, and hypothetical events. Loads considered for the PFSF are categorized as follows:

Load	Normal	Off-normal	Accident-Level
Dead Loads	x		
Live Loads	x		
Handling Loads	x	x	
Snow and Ice Loads	x		
Wind Loads	x		
Internal/External Pressure	x	x	
Lateral Soil Pressure	x	x	x
Thermal Loads	x	x	x
Accident Loads			
Explosion Overpressure			x
Drop/Tipover			x
Accident Pressurization			x
Fire			x
Tornado Winds/Missiles			x
Floods			x
Earthquake			x

Design criteria for these loads are described in this chapter and shall be used in the design of all SSCs classified as Important to Safety.

The SSCs that are classified as Important to Safety include:

- The Dry Cask Storage Systems - The dry cask storage system (HI-STORM) shall consist of metal canisters for spent fuel storage, storage casks, a metal transfer cask, lifting attachments, and associated equipment.

- Cask Storage Pads - The cask storage pads shall provide a stable and level support surface for the storage casks.

- Canister Transfer Building - The Canister Transfer Building shall be a reinforced concrete, one-story, high-bay structure that houses the canister transfer cranes and supports shipping cask receiving and canister transfer operations. The Canister Transfer Building shall use cells designed for canister transfer operation with thick concrete walls to shield personnel from radiation doses.

- Canister Transfer Cranes - The overhead bridge and semi-gantry cranes shall be single-failure-proof. The overhead bridge crane shall have a maximum capacity of 200 tons and shall be used to load and unload shipping casks from the shipment vehicle or transfer the canisters between the shipping cask and the storage cask. The semi-gantry crane shall have a minimum capacity of 150 tons and shall be used to transfer the canisters between the shipping cask and the storage cask.

The HI-STORM storage system design criteria are fully described in its SAR. Where the storage system design criteria do not bound the PFSF design criteria, the storage system design shall be shown in subsequent chapters as complying with the PFSF site-specific design criteria. The storage system design parameters that require site-specific analysis and/or design and the Sections where they are addressed are as follows:

Site Specific Design Criteria	Section Addressed
• Cask stability during a seismic event	4.2.1.5.1(H)
• Radiation doses for 4000 cask array to the RA, OCA, and nearest residence	7.3.3.5 and 7.6
• Off-normal contamination release event	8.1.5
• Hypothetical storage cask tipover onto a PFSF concrete storage pad	8.2.6
• Hypothetical loss of confinement	8.2.7
• Fire	8.2.5

3.2.1 Dead Load

Dead load is defined as the self weight of the structure, including all permanently installed equipment, and loads due to differential settlement, creep and shrinkage.

3.2.2 Live Loads

Live loads are defined as all equipment not permanently installed, lift loads, and all loads other than dead loads that might be experienced that are not separately identified and used in the applicable load combinations. These include normal and off-normal handling and impact loads from equipment. Impact loads for the cranes include equipment loads imposed on the crane through supporting members of the building and loads induced by the acceleration and deceleration of the crane bridge, gantry, or trolley.

3.2.3 Snow and Ice Loads

Snow loads, which are considered as live loads, shall be determined in accordance with ASCE-7 (Reference 3). The site is located in an area designated as CS on ASCE-7 Figure 7-1. Areas designated as CS require site-specific Case Studies to establish ground snow loads. In lieu of site-specific analysis, the ground snow load (P_g) is based on recommendations from the Tooele County Building Department for design of structures per the Uniform Building Code (UBC). UBC figure A-16-1 designates that the ground snow load for the entire State of Utah be established by the building official. The Tooele County Building Department recommends a 43 psf ground snow load for the reservation. This value is rounded up to a 45 psf ground snow load for a conservative design value. Design snow loads and placement of loads on structures shall follow the procedures outlined in ASCE-7.

3.2.4 Internal/External Pressure

Internal and external pressure loads are defined as loads resulting from the differential pressure between the helium fill gas inside the canister and the environmental pressure. The pressure may be positive (internal pressure) or negative (external pressure). The pressure must be considered for both normal and off-normal conditions, except for pressurization from a fuel rod rupture, which is an accident-level condition addressed under accident loads.

3.2.5 Lateral Soil Pressure

Lateral soil loads must be considered where applicable as they would result from normal, off-normal, and accident conditions. Lateral soil pressure includes lateral pressure resulting from soil and hydrostatic loads external to the structure transmitted to the structure by the adjacent soil mass.

3.2.6 Thermal Loads

Thermal loads are defined as loads resulting from normal, off-normal, and accident-level condition temperature distributions and thermal gradients within the structure, expansions and contractions of components, and restraints to expansions and contractions, except for thermal loads that are separately identified and used in the load combination.

The lowest ambient temperature taken near the site is -30° F, recorded at Salt Lake City (Reference 5).

Based on data recorded for areas near the site, Dugway (12 miles south of the site), Iosepa South Ranch (8 miles NW of the site), and the PFS met tower, the following temperatures where recorded. This information is obtained from References 6 and 33.

Temperature, F	Dugway	Iosepa Ranch	PFSF Met Data
Annual Average	51	50	49
Average Daily Maximum	94	95	92.6

Normal-level thermal loads are based on the highest recorded average annual temperature at the site. The annual average takes into account both day and night, summer and winter temperatures throughout the year and is the principle design parameter in the storage system design analysis because it establishes the basis for demonstration of long-term spent nuclear fuel integrity. The long term integrity of the spent fuel cladding is a function of the averaged ambient temperature over the entire storage period, which is assumed to be at the maximum average yearly temperature in every year of storage for conservatism in the cladding service life computations. As shown above, the highest average annual temperature taken near the site is 51° F, recorded at Dugway, 12 miles south of the site (Reference 6).

Off-normal level thermal loads are based on the highest recorded 24-hour average (day-night) temperature at the site, which represents extreme environmental conditions. However, 24-hour average temperatures are not typically recorded. A conservative approach is to use the "average daily maximum temperature," which is an average of the peak temperatures throughout the hottest month, July. Use of this temperature value, which bounds any 24-hour average provides an ample margin from the vendor's off-normal temperature limits. As shown above, the highest average daily maximum temperature taken near the site is 95° F, recorded at Iosepa Ranch, 8 miles NW of the site (Reference 6).[1]

[1] The HI-STORM Storage Cask SAR defines off-normal temperature as a three-day average temperature which shall be limited to 100°F.

Accident-level thermal loads are due to a temperature rise resulting from the loss of cooling air for an extended period of time or loads resulting from the maximum anticipated heat loads such as, a fire or burial under debris.

3.2.7 Accident Loads

Accident loads are defined as loads due to the direct and secondary effects of an off-normal or design basis accident that could result from an explosion, drop, tipover, pressurization, fire, or other human-caused occurrences. The accident events to be addressed in the design of the facility are discussed in Chapter 8.

3.2.8 Tornado and Wind Loadings

The design of SSCs shall consider loading associated with maximum site-specific meteorological conditions, including tornado and extreme wind. The tornado and wind loading used in the design shall be in accordance with ANSI/ANS 57.9 (Reference 4), NUREG-0800 (Reference 7), Regulatory Guide 1.76 (Reference 8), and ASCE-7.

3.2.8.1 Applicable Design Parameters

The normal design basis wind shall have a velocity of 90 mph as shown in Figure 6-1 of ASCE-7. The design basis wind is defined as a 3-second gust speed at 33 ft above ground for Exposure C category and is associated with an annual frequency of 2E-2 times per year.

The extreme design basis wind shall be derived from the design basis tornado. Tooele County is located in Tornado Intensity Region III as defined by Regulatory Guide 1.76, where the following design basis tornado characteristics are specified:

Design Basis Tornado Characteristics

Maximum Wind Speed	240 mph
Rotational Wind Speed	190 mph
Translational Speed	50 mph
Radius of Max. Wind Speed	150 ft
Pressure Drop	1.5 psi
Rate of Pressure Drop	0.6 psi/sec

3.2.8.2 Determination of Forces on Structures

Forces resulting from the design basis wind and the design basis tornado shall be considered in the design. The method used to convert wind loading into forces on a structure shall be in accordance with NUREG-0800 (Section 3.3.1, Wind Loadings, and Section 3.3.2, Tornado Loadings).

3.2.8.3 Ability of Structure to Perform Despite Failure of Structure Not Designed for Tornado Load

The PFSF shall be designed to ensure that SSCs that are not designed for tornado loads do not adversely affect the safety functions of SSCs that are classified as Important to Safety.

SSCs that are classified as Important to Safety but not designed for tornado loads shall be located so as to be protected by a SSC that is classified as Important to Safety and designed for tornado loads.

The Canister Transfer Building shall be designed to withstand tornado-generated wind loadings and missiles in order to protect Important to Safety SSCs housed within the building that are not designed for tornado loads.

3.2.8.4 Tornado Missiles

SSCs that are classified as Important to Safety shall be designed for tornado-generated missiles except as noted in Section 3.2.8.3.

The loaded storage casks shall remain stable and the confinement boundary not breached when subjected to tornado-generated missiles.

The storage pads and Canister Transfer Building shall remain stable and structurally intact when subjected to tornado-generated missiles.

Tornado-generated missiles need not be considered in the design of the canister, overhead bridge and semi-gantry cranes, or transfer cask since the canister is protected by the storage cask and the cranes and transfer cask are protected by the Canister Transfer Building.

NUREG-0800, Section 3.5.1.4 requires that postulated tornado missiles include at least three objects: a massive high kinetic energy missile which deforms on impact, a rigid missile to test penetration resistance, and a small rigid missile of a size sufficient to just pass through any openings in protective barriers. To bound these three objects, NUREG-0800, Section 3.5.1.4 requires the applicant analyze the specific missiles defined as "Spectrum I" or "Spectrum II". Spectrum II missiles are used for the Canister Transfer Building since the type and velocity of the missiles specified are representative of the types of objects which might be found near the PFSF site. Therefore the postulated tornado missiles for the design of the Canister Transfer Building shall be in accordance with NUREG-0800, Section 3.5.1.4, for Spectrum II missiles for Region III. The tornado-generated missiles shall include:

A. 115 lb. wood plank (3.6" x 11.4" x 12' long) with horizontal velocity of 190 ft/sec.
B. 287 lb. 6" schedule 40 pipe with horizontal velocity of 33 ft/sec.
C. 9 lb. 1" diameter steel rod with horizontal velocity of 26 ft/sec.
D. 1124 lb. 13.5" diameter wooden utility pole with horizontal velocity of 85 ft/sec.
E. 750 lb. 12" schedule 40 pipe with horizontal velocity of 23 ft/sec.
F. 3990 lb. automobile with horizontal velocity of 134 ft/sec.

NOTES: Vertical velocities are 70% of horizontal velocities except for missile C. Missile C has the same velocity in all directions. Missiles A, B, C, and E are

considered at all elevations. Missiles D and F are considered at elevations up to 30' above all grade levels within ½ mile of the structure.

The barrier design procedure associated with tornado-generated missiles shall be in accordance with Stone and Webster Topical Report, SWECO 7703, "Missile-Barrier Interaction", September 1977 (Reference 32), which has been submitted to and reviewed by the NRC for use at other nuclear facilities.

3.2.9 Water Level (Flood) Design

The site is located in Skull Valley, an area of western Utah with a semi-arid climate, receiving low annual precipitation. Precipitation ranges from 7 to 12 inches per year. The site has no flowing or intermittent streams nearby, however, there is evidence of minor drainage channels created by infrequent thunderstorms or snow melt runoff.

THIS PAGE INTENTIONALLY LEFT BLANK

Two major watersheds have been identified which can contribute runoff to the PFSF site area as described in Section 2.4.1.2. A relatively large watershed from the lower Stansbury Mountains in the east to the Lookout Mountain in the south is identified as Basin A and a relatively smaller watershed from the lower Cedar Mountains in the west is identified as Basin B (see Figure 2.4-1). Basin A is separated from Basin B by an earthen berm (PMF Berm) which will be constructed at the PFSF to control runoff from these offsite sources. This berm will ensure that there is no cross flow between basin A and B.

Analyses of the probable maximum precipitation (PMP) were performed to determine a probable maximum flood (PMF) for stormwater drainage Basins A and B. For an extremely conservative PMF (Q_{PMF} = 85,000 cfs), the Basin A PMF water elevation predicted at the southeast and northeast corner locations of the site is 4,468.8 and 4,456.7 feet, respectively. The site grade elevations at these locations are 4,476 and 4,462 feet, respectively, which are higher than the predicted flood elevations. Consequently, all SSCs that are classified as Important to Safety are located above the Basin A PMF flood plain.

Basin B stormwater runoff from the lower Cedar Mountain drains as a sheet flow toward the PFSF site. An earthen berm and drainage ditch system will be constructed on the south and west sides of the PFSF storage site to divert the PMF stormwater flows around the site and into the Skull Valley natural drainage system. Flood diversion berms will be constructed to resist erosive forces by using compacted soil with shallow side slopes (3:1 for the access road PMF diversion berm and 4:1 for the site PMF diversion berm). The berms will be seeded with a mixture of grasses and shrubs to provide soil stability. Ditches lined with riprap will be provided along the base of the flood diversion berms where stormwater is collected and conveyed. Consequently, all SSCs that are classified as Important to Safety are protected from the sheet flow associated with the Basin B PMF by the earthen berm. Therefore, forces due to flood waters and flood protection measures need not be considered in the design of SSCs that are classified as Important to Safety.

3.2.10 Seismic Design

The design of SSCs classified as Important to Safety shall consider loadings associated with the ISFSI design basis ground motion, which was determined by a probabilistic seismic hazard analysis as discussed in Section 2.6. Probabilistic analysis does not result in the determination of a unique Design Earthquake, such as is the case for a deterministic analysis. Instead, various scenarios and models are used to estimate the likelihood of earthquake ground motions at a site and systematically take into account uncertainties that exist in various hazard parameters. The results are in the form of hazard curves that express the mean annual probabilities or frequencies with which various levels of fault displacement and ground motion are expected to be exceeded. Regulatory Guide 1.29 (Reference 10) was used to define the SSCs that are required to withstand the loadings associated with the ISFSI design basis ground motions. These SSCs are identified in Regulatory Guide 1.29 as seismic Category I.

3.2.10.1 Input Criteria

Tooele County is located west of the Rocky Mountain Front, which is defined in 10 CFR 72.102 as approximately 104° west longitude. As described in Section 2.6, a probabilistic seismic hazard analysis was performed to establish the appropriate seismic design basis for the facility. This analysis applies the guidance in Regulatory Guide 1.165 (Reference 25) to the PFSF site. A return period of 2,000 years was determined to be appropriate (References 26 and 29).

In addition, a site-specific geotechnical investigation was performed to ensure the geological characteristics and soil are stable under earthquake conditions as described in Section 2.6.

3.2.10.1.1 Design Response Spectra

The design basis ground motion for the PFSF is described by site-specific response spectrum curves anchored at 0.711 g in two directions of the horizontal plane and 0.695 g in the vertical plane. The response spectra curves are free field at the ground surface and account for the local soil conditions. The horizontal and vertical design response spectra curves for the site are shown in Figure 4 of Reference 27.

3.2.10.1.2 Design Response Spectra Derivation

Site-specific horizontal and vertical design response spectra curves for the facility are developed using probabilistic seismic hazard analysis methodology in accordance with Regulatory Guide 1.165 (Reference 25), as described in References 27 and 28.

3.2.10.1.3 Design Time History

Design time histories shall be used in the cask stability analyses and in the storage pad design. Statistically independent artificial time histories shall be developed in accordance with NUREG-0800, Sections 3.7.1 and 3.7.2 shall be shown to envelope the site-specific response spectra.

3.2.10.1.4 Use of Equivalent Static Loads

The HI-STORM storage system is dynamically analyzed and does not use equivalent static loads.

Equivalent static loads are not used for onsite structures since dynamic analyses are used in the seismic analysis and design.

3.2.10.1.5 Critical Damping Values

Critical damping values shall be in accordance with Regulatory Guide 1.61 (Reference 13) for a SSE.

3.2.10.1.6 Basis for Site-Dependent Analysis

Site-specific vibratory ground motion is established through evaluation of the seismology, geology, and the seismic and geologic history of the site and surrounding region. This information is contained in the site-specific probabilistic seismic hazard analysis (References 27 and 28).

3.2.10.1.7 Soil-Supported Structures

The soil-supported structures that shall be analyzed for the ISFSI design basis ground motion are the concrete cask storage pads and the Canister Transfer Building. These structures shall be founded on in-situ soil at a minimum depth of 2 ft 6 inches for frost

protection. The cask storage pads will be founded on a layer of soil cement, which will overlie in situ soils. The soil-cement layer will have a nominal thickness of nearly 2 ft under all of the pads, with a minimum required thickness of 1 ft and a maximum allowable thickness of 2 ft. The Canister Transfer Building will be founded on in situ soils at a depth of 5 ft. The depth of soil over bedrock is between 520 ft and 880 ft below the surface of the site (Reference 9).

3.2.10.1.8 Soil-Structure Interaction

Soil-structure interaction shall be considered in the design of soil-supported structures by including the effects of the soil properties established during the geotechnical investigation program and as represented by discrete soil springs or a finite element layered system as described in ANSI/ANS 57.9, Appendix C.

Soil boring logs and soil properties of the PFSF site are contained in Chapter 2, Appendix 2A.

3.2.10.2 Seismic-System Analysis

3.2.10.2.1 Seismic Analysis Methods

Seismic analysis methods shall be in accordance with standard practices and methods as described in ANSI/ANS 57.9, NUREG-0800, ASCE-4 (Reference 14), and others referenced herein.

The seismic response of each structure shall be determined by preparing a mathematical model of the structure and calculating the response of the model to the prescribed seismic input.

The HI-STORM storage system seismic loadings and analysis methods are described in the HI-STORM SAR, Sections 2.2.3.7 and 3.4.7, respectively. Site-specific cask stability analysis shall be performed to account for the site-specific seismic response spectra curves, soil-structure interaction, and the actual PFSF pad size and arrangement.

The concrete storage pads shall be analyzed with a dynamic seismic time history analysis using a finite element model with soil-structure interaction considered by the use of dynamic soil springs. Various combinations of cask placements shall be considered to determine the controlling load case.

The Canister Transfer Building shall be analyzed for seismic loads using a frequency response analysis and considering soil-structure interaction.

The overhead bridge and semi-gantry cranes shall be analyzed considering the Maximum Critical Load (maximum lifted load whose uncontrolled movement or release could adversely affect the operation of SSCs classified as Important to Safety) in combination with a seismic event in accordance with NUREG-0554 (Reference 15). A set of amplified response spectra curves at the crane rail locations shall be developed for use in the crane seismic analysis and design.

3.2.10.2.2 Natural Frequencies and Response Loads

The modal analysis considers the natural frequency of the system as well as the other significant modes of vibration. Response loads are determined from the appropriate response spectra at the calculated frequencies.

3.2.10.2.3 Procedure Used to Lump Masses

The inertial mass properties of each structure shall be modeled using the discretization of mass formulation whereby the structural mass and associated rotational inertia are discretized and lumped at node points of the model. Node points where masses are lumped shall be located at the center of gravity of the member or component represented in the model.

3.2.10.2.4 Rocking and Translational Response Summary

Rocking and translational response shall be modeled by including equivalent rocking and translational soil springs in accordance with appropriate spring constants or impedance functions as described in ASCE-4.

3.2.10.2.5 Methods Used to Couple Soil with Seismic-System Structures

The soil can be represented by discrete springs or a finite element model to represent the soil substratum.

THIS PAGE INTENTIONALLY LEFT BLANK

3.2.10.2.6 Methods Used to Account for Torsional Effects

The storage pads and the Canister Transfer Building shall be modeled and analyzed as 3-dimensional multimass systems. Therefore, torsional effects due to eccentricities of the mass are taken into account in the analysis.

3.2.10.2.7 Methods for Seismic Analysis of Dams

There are no dams onsite or in the immediate area.

3.2.10.2.8 Methods to Determine Overturning Moments

Overturning stability shall be assured for the storage casks on the pads.

Overturning stability of loaded storage casks located on a storage pad shall be proved with a dynamic analysis using the site-specific seismic design parameters and considering soil-structure interaction.

3.2.10.2.9 Analysis Procedure for Damping

Critical damping values shall be developed in accordance with Regulatory Guide 1.61 for a SSE.

3.2.10.2.10 Seismic Analysis of Overhead Cranes

The overhead bridge and semi-gantry cranes shall be analyzed for seismic effects in accordance with the requirements of NUREG-0554 for single-failure-proof cranes. The seismic analysis of the cranes shall include the Maximum Critical Load in the lifted position during a seismic event. The seismic analysis methods shall be in accordance

with ASME NOG-1 (Reference 16). A set of amplified response spectra curves at the crane rail locations shall be developed for use in the crane seismic analysis and design.

3.2.10.2.11 Seismic Analysis of Specific Safety Features

SSCs classified as Important to Safety shall meet the requirements of 10 CFR 72.122(b)(2), which requires SSCs be designed such that design basis ground motion will not result in an uncontrolled release of radioactive material or increased radiation exposure to workers or members of the general public.

3.2.11 Combined Load Criteria

The design shall consider all appropriate loads and load combinations as required by the specific SSC design code(s). Design loads shall be determined from normal, off-normal, and accident-level conditions. Design loads shall be combined to simulate the most adverse load conditions.

3.2.11.1 HI-STORM Storage System Load Combinations

Loads and load combinations used in the design of the HI-STORM 100 Cask System are identified in the HI-STORM SAR, Sections 2.2.7 and 3.1.2.1.2. Exceptions to the various code criteria are shown in HI-STORM SAR, Table 2.2.15.

HI-STORM Canister

The canister shell and internals are required by the HI-STORM SAR to be designed to the applicable requirements of Subsections NB and NG of the ASME BPVC, Section III (Reference 17). The load combinations for all normal, off-normal and accident conditions and corresponding Service Levels of the canister design are as follows:

ASME Design

P_i or P_o (ASME BPVC pressure design)

Normal Conditions (ASME Service Level A)

$D + T + P_i + H$

$D + T + P_o + H$

Off-Normal Conditions (ASME Service Level B)

$D + T' + H + (P_i' \text{ or } P_o')$

Accident-Level Conditions (ASME Service Level D)

$D + T + P_i + H'$

$D + T + (P_i^* \text{ or } P_o^*)$

Where:

D	=	Dead Load
T	=	Thermal (normal operating temperature)
T′	=	Thermal (off-normal temperature)
P_i	=	Normal Internal Pressure
P_o	=	Normal External Pressure
P_i'	=	Off-normal Internal Pressure
P_o'	=	Off-normal Exterior Pressure
P_i^*	=	Accident Internal Pressure
P_o^*	=	Accident External Pressure
H	=	Normal Handling Loads
H′	=	Accident-Level Handling Load (drop)

The number of load combinations was reduced by defining the internal and external pressures (P_i and P_o) such that they bound other surface-intensive loads of snow, tornado wind, flood, and explosion.

The stress intensity limits for the canister confinement boundary (governed by Subsection NB of the ASME BPVC, Section III) and the canister internals (governed by Subsection NG of the ASME BPVC, Section III) are shown in Table 3.2-1.

The damaged fuel container is governed by Subsection NF for normal conditions of the ASME BVPC, Section III.

HI-STORM Storage Cask and HI-TRAC Transfer Cask

The load combinations for the HI-STORM storage cask and HI-TRAC transfer cask under normal, off-normal, and accident conditions are as follows:

Normal Conditions (ASME Service Level A)

D + T + H

Off-Normal Conditions (ASME Service Level B)

D + T′ + H

Accident-Level Conditions (ASME Service Level D)

D + T + H′

D + T + (E or F or W′ + M) (storage cask only)

Where:

D = Dead Load

T = Thermal (normal operating temperature)

T′ = Thermal (off-normal temperature)

H = Normal Handling Loads

H′ = Accident-Level Handling Load (drop)

E = Earthquake

F = Flood (not applicable to this site)

W′ = Tornado wind

M = Tornado Missile Loads

The stress intensity limits for the steel structure of the HI-STORM storage cask and HI-TRAC transfer cask (governed by Subsection NF of the ASME BPVC, Section III for plate and shell components) are shown in Table 3.2-2. Limits for the Level D condition are obtained from Appendix F of the ASME BPVC, Section III for the steel structure of the storage cask. The storage cask concrete structure design is governed by ACI-349.

The ASME BPVC is not applicable to the HI-TRAC transfer cask for accident conditions, service level D conditions. The HI-TRAC cask shall be shown by analysis to not deform and cause an applied load to the canister, have any shell rupture, or have the top lid or transfer lid detach. The HI-TRAC lifting trunnion design is governed by ANSI N14.6.

3.2.11.2 (deleted)

THIS PAGE INTENTIONALLY LEFT BLANK

3.2.11.3 Cask Storage Pad Load Combinations

The cask storage pads shall be conventional mat foundations of reinforced concrete construction.

Loads and load combinations used in the design of the concrete storage pads shall be in accordance with ANSI/ANS 57.9 and ACI-349 (Reference 18) and shall include skip loading conditions to account for incremental cask placement.

Load factors and allowable stresses used in the design shall be in accordance with ACI-349.

The concrete storage pad design shall consider the following load combinations as included in, or derived from, ANSI/ANS 57.9 and ACI-349:

Normal Conditions

$U_c > 1.4D + 1.7L$

$U_c > 1.4D + 1.7L + 1.7H$

Off-Normal Conditions

$U_c > 0.75\ (1.4D + 1.7L + 1.7H + 1.7T\ )$

$U_c > 0.75\ (1.4D + 1.7L + 1.7H + 1.7T + 1.7W)$

Accident-Level Conditions

$U_c > D + L + H + T + (E \text{ or } A \text{ or } W_t \text{ or } F)$

$U_c > D + L + H + T_a$

Where:

U_c	=	Minimum available strength capacity of a cross section or member calculated per the requirements and assumptions of ACI-349
D	=	Dead load
L	=	Live load
H	=	Lateral soil pressure
W	=	Wind loads
W_t	=	Tornado wind and missile loads
E	=	ISFSI Design Earthquake load
T	=	Thermal loads
T_a	=	Accident-level thermal loads
A	=	Accident loads
F	=	Flood loads (not applicable to this site)

The allowable soil bearing pressures beneath the cask storage pad are described in Section 2.6.1.12.

Requirements for Concrete Storage Pads Associated with Cask Drop/Tipover Analyses

In addition to the above load combination criteria, the concrete storage pads and foundation shall comply with the following requirement to assure the validity of the analyses of the HI-STORM storage cask tipover/drop events onto a storage pad:

> The storage pads and underlying foundation shall be verified by analysis to limit cask deceleration during design basis drop and non-mechanistic tipover events to ≤45 g's at the top of the canister fuel basket. The analyses shall be performed using methodologies consistent with those described in the HI-STORM 100 FSAR (Reference 1). A lift height above the storage pads is not required to be established if the cask is lifted with a device designed in accordance with ANSI N14.6 and having redundant drop protection features.

Analyses of the HI-STORM storage cask vertical end drop and non-mechanistic tipover events have been performed using methodologies consistent with those described in the HI-STORM 100 FSAR, and the results of these analyses are described in Section 8.2.6. The non-mechanistic tipover analysis calculated a deceleration at the top of the canister fuel basket that is below the 45 g criteria. The vertical end drop analysis determined that the deceleration at the top of the canister fuel basket is below the 45 g criteria provided the storage cask is not raised above a height of 9 inches. This analysis thus establishes a HI-STORM storage cask design basis drop height of 9 inches, for drop onto a PFSF storage pad. The tipover and end drop analyses were based on the characteristics associated with the native soil that underlies the layer of soil cement upon which the pads will rest. The limiting design characteristics of the storage pads and underlying soil cement, on which the analyses are based, are as follows:

a. Concrete Thickness: ≤ 36 inches

b. Concrete Compressive Strength: ≤ 4,200 psi at 28 days

c. Reinforcement top and bottom (both directions): reinforcement area and spacing shall be determined by analysis and reinforcing bar shall be 60 ksi yield strength ASTM material

d. Thickness of the soil cement underlying the storage pads $\leq$ 24 inches

e. Soil cement modulus of elasticity: $\leq$ 75,000 psi

3.2.11.4 Canister Transfer Building Load Combinations

3.2.11.4.1 Canister Transfer Building Structure

The Canister Transfer Building is a reinforced concrete and steel structure. The design of the structure shall be in accordance with the ANSI/ANS 57.9, ACI-349, and ANSI/AISC N690 (Reference 19). Load factors and allowable stresses used in the design shall be in accordance with ACI-349 and ANSI/AISC N690.

The design of the reinforced concrete portions of the structure shall consider the following load combinations as included or derived from ANSI/ANS 57.9 and ACI 349:

Normal Conditions

$U_c > 1.4D + 1.7L$

$U_c > 1.4D + 1.7L + 1.7H$

Off-Normal Conditions

$U_c > 0.75\ (1.4D + 1.7L + 1.7H + 1.7T)$

$U_c > 0.75\ (1.4D + 1.7L + 1.7H + 1.7T + 1.7W)$

Accident-Level Conditions

$U_c > D + L + H + T + (E \text{ or } A \text{ or } W_t \text{ or } F)$

$U_c > D + L + H + T_a$

Where:

U_c = Minimum available strength capacity of a cross section or member calculated per the requirements and assumptions of ACI-349

D = Dead load

L = Live load

H = Lateral soil pressure

W = Wind loads

W_t = Tornado wind and missile loads

E = ISFSI Design Earthquake load

T = Thermal loads

T_a = Accident-level thermal loads

A = Accident loads

F = Flood loads (not applicable to this site)

Live load shall include crane loads in accordance with ASME NOG-1 positioned to create a worst-case loading condition. All appropriate load combinations identified in ASME NOG-1, as shown in Section 3.2.11.5 herein, shall also be considered in the building design. Live load shall also include shipping cask, transfer cask, and storage cask loads positioned with loaded canisters to create the worst-case loading on the Canister Transfer Building floor. Load combinations will account for "stacked arrangements" where the transfer cask is placed on top of the storage or shipping cask, side by side placement of the casks in a transfer cell, and when a transporter carrying a loaded storage cask moves adjacent to other loaded casks.

The design of the structural steel portions of the Canister Transfer Building shall consider the following load combinations as included or derived from ANSI/ANS 57.9 and the ANSI/AISC N690:

<u>Normal Conditions</u>

S and $S_v > D + L$ or $D + L + H$

Off-Normal Conditions

$1.3\ (S \text{ and } S_v) > D + L + H + W$

$1.5S > D + L + H + T + W$

$1.4\ S_v > D + L + H + T + W$

Accident-Level Conditions

$1.6S > D + L + H + T + (E \text{ or } W_t \text{ or } F)$

$1.4\ S_v > D + L + H + T + (E \text{ or } W_t \text{ or } F \text{ or } A)$

$1.7S > D + L + H + (T + A) \text{ or } T_a$

$1.4\ S_v > D + L + H + T_a$

Where:

S	=	Strength of a section, member, or connection calculated in accordance with ANSI/AISC N690
S_v	=	Shear strength of a section, member, or connection calculated in accordance with ANSI/AISC N690
D	=	Dead load
L	=	Live load
W	=	Wind load
W_t	=	Tornado wind and missile loads
E	=	ISFSI Design Earthquake load
F	=	Flood loads (not applicable to this site)
T	=	Thermal load
A	=	Loads due to a drop of a heavy load (not applicable to this project)
H	=	Lateral soil pressure (not applicable to building steel)
T_a	=	Off-normal thermal (not applicable to building steel)

Live load shall include crane loads in accordance with ASME NOG-1 positioned to create a worst-case loading condition. All appropriate load combinations identified in ASME NOG-1, as shown in Section 3.2.11.5 herein, shall also be considered in the building design.

3.2.11.4.2 Canister Transfer Building Foundation

The foundation for the Canister Transfer Building shall be a conventional mat foundation of reinforced concrete construction. Loads and load combinations used in the design of foundations shall be in accordance with ANSI/ANS 57.9 and ACI-349.

Load factors and allowable stresses used in the design shall be in accordance with ACI-349.

Foundation design for the Canister Transfer Building shall consider the following load combinations per ANSI/ANS 57.9:

Normal Conditions

$U_f > 1.4D + 1.7\,L + 1.7G$

$U_f > 1.4D + 1.7L + 1.7H + 1.7G$

Off-Normal Conditions

$U_f > 0.75\,(1.4D + 1.7L + 1.7H + 1.7T + 1.7G)$

$U_f > 0.75\,(1.4D + 1.7L + 1.7H + 1.7T + 1.7W + 1.7G)$

Accident-Level Conditions

$U_f > D + L + H + T + G + (E \text{ or } A \text{ or } W_t \text{ or } F)$

$U_f > D + L + H + T_a + G$

Where:

U_f = Minimum available strength capacity of a foundation cross section or member calculated in accordance with the requirements and assumptions of ACI-349

D = Dead load

L = Live load

G = Function of required minimum soil capacity
H = Lateral soil pressure
W = Wind loads
W_t = Tornado wind and missile loads
E = ISFSI Design Earthquake load
T = Thermal loads
T_a = Accident-level thermal loads
A = Accident loads
F = Flood loads (not applicable to this site)

Live load shall include shipping cask, transfer cask, and storage cask loads positioned with loaded canisters to create the worst-case loading on the Canister Transfer Building foundation. Load combinations will account for configurations where the transfer cask is placed on top of the storage or shipping cask, side by side placement of the casks in a transfer cell, and when a transporter carrying a loaded storage cask moves adjacent to other loaded casks.

The Canister Transfer Building foundation shall be founded at a depth of 5 ft below grade, which exceeds the minimum depth of 2 ft 6 inches required for protection against frost, in accordance with the PFSF Geotechnical Design Criteria (Reference 9). Refer to Section 2.6.1.12 for a discussion of the stability and settlement analyses of the Canister Transfer Building.

3.2.11.5 Canister Transfer Crane Load Combinations

The canister transfer cranes (overhead bridge crane and the semi-gantry crane) shall be classified as Type I cranes in accordance with ASME NOG-1 since the cranes are used to handle critical loads. A Type I crane is defined as a crane that is designed and constructed to remain in place and support a critical load during and after a seismic event and has single-failure-proof features such that any credible failure of a single component will not result in the loss of capability to stop and/or hold the critical load. A critical load is defined as any lifted load whose uncontrolled movement or release could result in potential offsite radiation exposure. The single-failure-proof crane design shall meet the requirements of NUREG-0554, NUREG-0612 (Reference 20), and ASME NOG-1.

The canister transfer cranes shall be designed in accordance with the following load combinations per ASME NOG-1.

Normal Conditions

$P_c = P_{db} + P_{dt} + (P_{lr} \text{ or } P_p)$

$P_c = P_{db} + P_{dt} + P_{lr} + (P_v \text{ or } P_{ht} \text{ or } P_{hl}) + P_{wo}$

Off-Normal Conditions

$P_c = P_{db} + P_{dt} + P_a + P_{wo}$

Accident-Level Conditions

$P_c = P_{db} + P_{dt} + P_{cs} + P_e + P_{wo}$

$P_c = P_{db} + P_{dt} + P_e + P_{wo}$

$P_c = P_{db} + P_{dt} + P_{wt}$

Where:

P_c = Load combination

P_{db} = Bridge dead load

P_{dt} = Trolley dead load

P_{lr} = Design rated lift load

P_p = Facility operation induced loads transmitted to crane

P_v = Vertical impact loads

P_{ht} = Transverse horizontal load

P_{hl} = Longitudinal horizontal load

P_{wo} = Crane wind load (not applicable inside Canister Transfer Building)

P_a = Abnormal (off-normal) event load

P_{cs} = Credible critical load with IFSFI DE (or SSE) load

P_e = ISFSI DE (or SSE) load

P_{wt} = Tornado wind load (not applicable inside Canister Transfer Building)

Extreme environmental loads shall include the SSE as being equal to the ISFSI DE. The Operating Basis Earthquake (OBE) is not applicable for the PFSF design. The Maximum Critical Load, noted in NUREG-0554, shall be equal to the crane design capacity (200 tons for the overhead bridge crane and 150 for the semi-gantry crane) and shall be used as the basis for the credible critical load determined per ASME NOG-1.

The canister transfer cranes shall be designed using a response spectrum dynamic seismic analysis as described in ASME NOG-1, Section 4150. The analysis shall be performed by the crane vendor and shall include the development of amplified response spectrum (horizontal and vertical) at the crane rail elevation of the Canister Transfer Building. The amplified response spectrum shall be based on the site response spectrum (Appendix 2D, Figure 4-8) as modified by the effects of the soil-structure interaction and response of the Canister Transfer Building.

Allowable stresses used in the crane designs shall be in accordance with ASME NOG-1.

3.2.12 Lightning

The design of the SSCs, that are exposed to lightning, i.e., outdoors, shall be designed to withstand the effects of a lightning strike such that a lightning strike will not impair their capability to perform their safety function or result in a radiological release. The light poles and perimeter fences will be connected to the facility grounding system for personnel safety in the event of lightning strikes. The Canister Transfer Building shall be provided with lightning protection in accordance with NFPA 780.

3.3 SAFETY PROTECTION SYSTEMS

3.3.1 General

The PFSF shall be designed for safe containment and storage of the spent fuel. The PFSF shall withstand normal, off-normal, and postulated accident conditions without release of radioactive material. The major design elements that assure that the safety objectives are met are the storage system, the cask storage pads, the Canister Transfer Building, and the canister transfer cranes.

The primary safety functions of the storage system principal components (canister, storage cask, and transfer cask) are as follows:

1. Canister

   - Provides confinement of the spent nuclear fuel and associated radioactive material.
   - Provides criticality control.
   - Provides heat transfer capability so that the fuel clad temperature does not exceed allowables.
   - Provides radiation shielding (together with a storage cask or transfer cask).

2. Storage cask

   - Protects the canister from weather and postulated environmental events such as earthquakes and tornado missiles.
   - Facilitates heat transfer (ventilated) of the canister.
   - Provides radiation shielding.

3. Transfer cask

- Serves as a special transfer and lifting device for movement of the spent fuel canister.
- Provides physical protection of the canister during canister transfer operations.
- Provides radiation shielding to minimize exposure rates during transfer operations.
- Facilitates heat transfer of the canister.

The primary safety function of the cask storage pads is to:

- Provide a stable and level surface for the storage casks.
- Provide required yielding for drop/tipover of the storage casks.

The primary safety functions of the Canister Transfer Building are to:

- Provide tornado and wind protection during transfer operations.
- Provide protection from tornado-generated missiles.
- Provide radiation shielding during transfer operations.
- Provide the support for the canister transfer cranes.
- Provides fire suppression

The primary safety function of the overhead bridge and semi-gantry cranes is to:

- Provide the single-failure-proof lifting capability for shipping cask load/unload operations and canister transfer operations.

As discussed in the following sub-sections, the PFSF design shall incorporate design features addressing each of the above functions to assure safe execution of PFSF operations.

3.3.2 Protection By Multiple Confinement Barriers and Systems

This section of the principal design criteria establishes requirements that satisfy 10 CFR 72.122(h), which identifies general design criteria requirements to protect and confine the spent fuel.

3.3.2.1 Confinement Barriers and Systems

The primary confinement barrier for spent nuclear fuel is the canister. The canister is required to maintain confinement for normal storage conditions and all postulated accidents with the protection of the storage cask or transfer cask.

The canister shall be designed to provide a confinement barrier for spent nuclear fuel. The canister confinement barrier shall be designed in accordance with ASME Boiler and Pressure Vessel Code, Section III.

The canister internals, which are used to constrain fuel assemblies during storage, shall be designed in accordance with ASME Section III, Subsection NG.

The canister shall be designed to withstand credible drop accidents (drops less than 9 inches while in the storage cask) without impairing fuel retrievability. The canister shall also be designed to maintain leak tightness and ensure that there is no leakage of radioactive material under all postulated loading conditions.

3.3.2.2 Ventilation Offgas

There are no ventilation offgas systems at the PFSF. The welded sealed canister precludes the need for offgas systems.

3.3.3 Protection by Equipment and Instrumentation Selection

3.3.3.1 Equipment

The SSCs that have been identified as Important to Safety, per Section 3.4, for the PFSF are:

- Storage cask system canister, storage cask, transfer cask, and lifting devices.
- Cask Storage Pads.
- Canister Transfer Building.
- Canister Transfer Cranes (overhead bridge and semi-gantry).

The design criteria for these components are summarized in Section 3.6.

3.3.3.2 Instrumentation

This section of the principal design criteria establishes requirements that satisfy 10 CFR 72.122(i), which identifies general design criteria that requires instrumentation and control systems be provided to monitor systems that are classified as Important to Safety. These systems shall be monitored over the anticipated ranges for normal and off-normal operation.

Temperature monitors shall be installed to monitor the air outlet temperatures of the loaded storage casks.

Radiation monitors shall be utilized during the canister transfer process to ensure occupational exposures are within 10 CFR 20 limits and during the storage process to ensure that doses to the public are within 10 CFR 72.104 limits.

The canister transfer cranes shall be provided with limit switches to assure bridge and trolley movements are within acceptable limits and load cells to assure the lifted load does not exceed the crane capacity.

3.3.4 Nuclear Criticality Safety

This section of the principal design criteria establishes requirements that satisfy 10 CFR 72.124(a) and (b), which identifies general design criteria that requires handling, transfer, and storage systems be designed for nuclear criticality safety. These systems shall be designed to maintain subcriticality such that K_{eff} remain below 0.95 under all conditions (i.e., normal handling, off-normal handling, storage, and postulated accidents) as recommended by NUREG-1536 (Reference 21). All canisters arriving at the PFSF shall be in the dry condition (i.e., no moderator).

3.3.4.1 Control Methods for Prevention of Criticality

Subcritical conditions shall be maintained by the canister internal geometry, which establishes fuel assembly separation. Poison plates are included in the canister basket design to meet the requirements of 10 CFR 71, however, no credit shall be taken for the poison plates since it is assumed there is no moderator (i.e. dry). The design shall assume a fuel assembly enrichment equal to or greater than the maximum initial fuel assembly enrichment that will be stored. No credit shall be taken for burnup.

3.3.4.2 Error Contingency Criteria

The values of K_{eff} shall include error contingencies and calculational and modeling biases. K_{eff} shall equal the calculated K_{eff} plus criticality code bias, plus two times sigma uncertainty to yield a 95 percent statistical confidence level.

3.3.4.3 Verification Analysis

The model used for calculating K_{eff} shall be an NRC approved computer program. Models not previously approved shall be verified by comparison to benchmark experimental data.

3.3.5 Radiological Protection

This section of the principal design criteria establishes requirements that satisfy 10 CFR 72.126(a), which identifies general design criteria that requires radiation protection systems (including SSC design, location, shielding, and testing) be provided to minimize personnel radiation exposure; 10 CFR 72.126(b), which identifies general design criteria that requires alarm systems be provided to warn personnel of abnormally high radiation concentrations; and 10 CFR 72.126(c), which identifies general design criteria that requires a means to measure and monitor radioactive effluents and direct radiation be provided.

Provisions for radiological protection by confinement barriers and systems are described in Section 3.3.2.1. Additional radiological protection design criteria is presented in the following sections.

3.3.5.1 Access Control

The boundary of the Restricted Area (RA) of the PFSF shall be determined such that the dose to any individual outside the RA will not exceed 2 mrem/hr in accordance with 10 CFR 20.1301. Access to the RA shall be normally limited to those individuals performing canister transfer or storage cask placement operations, maintenance and surveillance activities, and security functions. Personnel entering the RA shall be required to wear dosimetry.

Thermoluminecent dosimeters (TLDs) shall be located at the perimeter of the RA and owner controlled area (OCA) and shall be monitored on a periodic basis. The OCA boundary shall be determined such that (1) the annual dose equivalent to any real individual located beyond the boundary will not exceed 25 mrem/yr whole body, 75 mrem/yr thyroid, and 25 mrem/yr to any other critical organ for normal operation in accordance with 10 CFR 72.104, and (2) the dose to any individual located on or beyond the nearest boundary will not exceed from any design basis accident the more limiting of a total effective dose equivalent of 5 rem, or the sum of the deep-dose equivalent and the committed dose equivalent to any individual organ or tissue (other than the lens of the eye) of 50 rem, in accordance with 10 CFR 72.106.. The lens dose equivalent shall not exceed 15 rem and the shallow dose equivalent to skin or to any extremity shall not exceed 50 rem.

3.3.5.2 Shielding

Radiation shielding shall be provided to help ensure that dose rates are maintained As-Low-As-Reasonably-Achievable (ALARA) during transfer operations and storage periods. The storage and transfer casks shall provide most of the required shielding. Temporary shielding shall be used where necessary to reduce doses and maintain ALARA. The Canister Transfer Building and Security and Health Physics Building shall also be designed to include radiation shielding. The Administration Building and

Operations and Maintenance Building shall be located remotely from the storage area to avoid unnecessary doses to administrative personnel.

The maximum doses to individual members of the public are defined by the RA and OCA boundaries as shown in Section 3.3.5.1 above. Estimates of off-site collective doses at the RA and OCA boundary are addressed in Section 7.3.3.5.

The maximum total effective dose equivalent (TEDE) for personnel working at the PFSF shall not exceed 5 rem/year in accordance with 10 CFR 20.1201. Estimates of on-site collective doses for various PFSF operations are addressed in Section 7.4.

3.3.5.3 Radiological Alarm Systems

There are no credible events that could result in releases of radioactive products from inside the canister to any effluents or unacceptable increases in direct radiation. In addition, the releases postulated as the result of the hypothetical accidents described in Chapter 8 are of a very small magnitude. However, area radiation monitors with audible alarms shall be provided in the Canister Transfer Building for canister transfer operations.

3.3.6 Fire and Explosion Protection

This section of the principal design criteria establishes requirements that satisfy 10 CFR 72.122(c), which identifies general design criteria that requires SSCs classified as Important to Safety be designed and located so they can continue to perform their safety functions effectively under credible fire and explosion exposure conditions.

The PFSF shall be an open gravel surfaced area (reference SAR Figure 1.2-1). PFS will implement a maintenance program to control any significant growth of vegetation through the crushed rock surface of the Restricted Area, the isolation zone, the 10 ft. space between the isolation zone and the perimeter road, and the perimeter road. Thus, the surface of the Restricted Area from the concrete pads to the outside of the

perimeter road will be non-combustible. No combustible material of any consequence shall be stored at the PFSF. The quantity of fuel carried in the cask transporter shall be limited by the size of the fuel tank to a relatively small amount, so that only a small fire of short duration would be possible near any casks located on the pads or in a canister transfer cell. The quantity of fuel carried in the heavy haul tractor/trailer unit shall also be limited by the size of the fuel tank to minimize a potential fire duration in the Canister Transfer Building load/unload bay. The design for the SSCs shall encompass any temperature gradients resulting from a fire from these scenarios. For rail delivery/retrieval of shipping casks, the train locomotives are required by administrative procedure to stay out of the Canister Transfer Building to prevent the possibility of a fire in the building fueled by the large quantity of fuel in the locomotive. The design of the building and its surroundings will assure that any diesel fuel spilled outside the building will not flow into the building, which could also create a fire hazard inside the building.

In order to assure that important to safety SSCs are protected against the effects of credible explosions that could occur both on and off the PFSF site, the PFSF design and layout shall assure that the peak positive incident overpressure at important to safety SSCs does not exceed 1.0 psi. Regulatory Guide 1.91 (Reference 22) states "A method for establishing the distances referred to above can be based on a level of peak positive incident overpressure (designated as P_{so} in Ref. 1) below which no significant damage would be expected. It is the judgement of the NRC staff that, for the structures, systems, and components of concern, this level can be conservatively chosen at 1 psi (approximately 7 kPa)." It is considered that the 1 psi overpressure selected in the Regulatory Guide is conservative for application to the SSCs of concern at the PFSF, such as the storage casks and Canister Transfer Building which are designed to withstand pressures greater than 1.0 psi, as discussed in Chapter 4.

3.3.7 Materials Handling and Storage

This section of the principal design criteria establishes requirements that satisfy 10 CFR 72.128(a) and (b), which identify general design criteria that requires spent fuel storage and handling equipment be designed to ensure adequate safety under normal and accident conditions and that radioactive waste treatment facilities be provided.

This section also establishes requirements that satisfy 10 CFR 72.122(l), which identifies general design criteria that requires the storage system be designed to allow ready retrieval of the spent fuel for shipping offsite.

3.3.7.1 Spent Fuel Handling and Storage

All spent fuel handling and storage at the PFSF shall be performed with the spent fuel contained in the sealed metal canister. The design for handling and storage components shall ensure that the spent fuel canister confinement integrity is maintained.

The design shall ensure that handling components can safely be used to retrieve canisters from the storage casks and load them into shipping casks for shipment offsite throughout the life of the PFSF.

3.3.7.2 Radioactive Waste Treatment

Since the spent fuel is contained in the sealed metal canister, there is expected to be negligible radioactive contamination at the PFSF. The PFSF shall include provisions to package and store health physics survey material and dry wipes used to remove contamination in the event some minor radioactive contamination is found.

3.3.7.3 Waste Storage Facilities

A low level waste (LLW) holding cell shall be provided to store health physics survey material and dry wipes used to check casks for radioactive contamination. The holding cell shall be designed to maintain ALARA and store a few LLW containers until the LLW is shipped offsite. No other waste storage facilities are required at the PFSF.

3.3.8 Industrial and Chemical Safety

Spent fuel canister transfer operations at the PFSF shall be performed in accordance with 29 CFR 1910.179 (Reference 23), which is an Occupational Safety and Health (OSHA) Standard for operating overhead and gantry cranes.

THIS PAGE INTENTIONALLY LEFT BLANK

3.4 CLASSIFICATION OF STRUCTURES, SYSTEMS, AND COMPONENTS

The SSCs of the PFSF are classified as Important to Safety or Not Important to Safety. A tabulation of the SSCs by their classification is shown in Table 3.4-1. The criteria for selecting the classification for particular SSCs are based on the following definitions:

Important to Safety

A classification per 10 CFR 72.3 for any structure, system, or component whose function is to maintain the conditions required to safely store spent fuel, prevent damage to spent fuel containers during handling and storage, and provide reasonable assurance that spent fuel can be received, handled, packaged, stored, and retrieved without undue risk to the health and safety of the public.

Not Important to Safety

A quality classification for items or services that do not have a safety related function and that are not subject to special utility requirements or NRC imposed regulatory requirements.

SSCs classified as Important to Safety shall be designed, constructed, and tested in accordance with the Quality Assurance (QA) Program described in Chapter 11. The level of importance to safety for each SSC shall be based on QA classification categories as detailed in NUREG/CR-6407 (Reference 24). The classifications are intended to standardize the QA control applied to activities involving spent fuel storage systems. These classifications are defined as follows:

Classification Category A - Critical to Safe Operation

Category A items include SSCs whose failure or malfunction could directly result in a condition adversely affecting public health and safety. The failure of a single item could cause loss of primary containment leading to release of radioactive material, loss of shielding, or unsafe geometry compromising criticality control.

Classification Category B - Major Impact on Safety

Category B items include SSCs whose failure or malfunction could indirectly result in a condition adversely affecting public health and safety. The failure of a Category B item, in conjunction with the failure of an additional item, could result in an unsafe condition.

Classification Category C - Minor Impact on Safety

Category C items include SSCs whose failure or malfunction would not significantly reduce the packaging effectiveness and would not be likely to create a situation adversely affecting public health and safety.

The QA determination for the SSCs that are classified as Important to Safety are discussed in the following sections. A QA classification for these SSCs establishes the requirements that satisfy 10 CFR 72.122(a) general design criteria, which specifies SSCs Important to Safety be designed, fabricated, erected, and tested to quality standards.

3.4.1 Spent Fuel Storage Systems

3.4.1.1 Canister

The canister is classified as Important to Safety, Classification Category A since it serves as the primary confinement structure for the fuel assemblies and is designed to remain intact under all accident conditions analyzed in Chapter 8.

3.4.1.2 Storage Cask

The storage cask is classified as Important to Safety, Classification Category B since it is designed to remain intact under all accident conditions analyzed in Chapter 8 and serves as the primary component for protecting the canister during storage and provide radiation shielding and canister heat rejection.

3.4.1.3 Transfer Cask

The transfer cask is classified as Important to Safety, Classification Category B since it is designed to support the canister during transfer lift operations and provide radiation shielding and canister heat rejection.

3.4.1.4 Lifting Devices

The lifting devices (lift yoke, trunnions, and canister lift attachments) are classified as Important to Safety, Classification B to preclude the accidental drop of a canister.

3.4.2 Cask Storage Pads

The cask storage pads are classified as Important to Safety, Classification Category C to ensure a stable and level support surface for the storage cask under normal, off-normal, and accident-level conditions.

3.4.3 Canister Transfer Building

The Canister Transfer Building is classified as Important to Safety, Classification Category B to protect the canister from adverse natural phenomena during shipping cask load/unload operations and canister transfer operations. The building shall provide physical protection from tornado winds and missiles, radiological shielding inside to workers during transfer operations, and support for the canister transfer cranes.

3.4.4 Canister Transfer Cranes

The overhead bridge and semi-gantry canister transfer cranes are classified as Important to Safety, Classification Category B to preclude the accidental drop of a shipping cask without impact limiters during load/unload operations or canister during the canister transfer operations.

3.4.5 Seismic Support Struts

The seismic support struts are classified as Important to Safety, Classification Category B to ensure that the casks will remain stable and will not topple in the event of an earthquake.

3.4.6 Design Criteria for Other SSCs Not Important to Safety

The design criteria for SSCs classified as Not Important to Safety, but which have security or operational importance, such as security systems, standby power systems, cask transport vehicles, flood prevention earthwork, fire protection systems, radiation monitoring systems, and temperature monitoring systems, are addressed in subsequent chapters of this SAR. These SSCs shall be required to comply with their applicable codes and standards to ensure compatibility with SSCs that are Important to Safety and to maintain a level of quality that shall ensure that they will mitigate the effects of off-normal or accident-level events as required.

The cask transporter is classified as not Important to Safety but is designed with several features that assure safety while transporting spent nuclear fuel. Potential failure mechanisms of the transporter could involve the drive-train, brakes, electrical system, or lift beam hydraulic ram. Of these potential failures, only those that could drop the cask have the possibility of damaging the cask and adversely affecting public health and safety. Because of this, the transporter is not permitted by design to lift a cask above the cask vendor's analyzed safe handling height. In addition, a Technical Specification is proposed to ensure that the casks will not be lifted above the vendor's analyzed safe handling height. Therefore, a failure of the cask transporter will not damage the spent fuel storage system or adversely affect the health and safety of the public, which is the basis for the transporter classification as Not Important to Safety.

The flood control berm is classified as not Important to Safety. Flooding due to PMF would not compromise the safety of the storage casks or the Canister Transfer Building if the berm was not constructed or if it failed since the cask systems are designed to withstand severe flooding and full submergence. The berm is provided to minimize stormwater flowing across the site for ease of operations and maintenance activities.

Complete blockage of air inlet ducts, which could be hypothesized to occur in the event that severe flooding were to result in standing water above the tops of the air inlet ducts, is described in SAR Section 8.2.8. This section indicates that the HI-STORM inlet ducts can be blocked for 33 hours before the concrete of the HI-STORM storage cask would reach its short-term temperature limit, and over 72 hours without the fuel rod cladding exceeding its short-term temperature limit. PMF flows are mitigated in the Canister Transfer Building by locating the ground floor elevation above the maximum elevation of flood water. In addition, forces due to flowing water would be insignificant and would not affect the stability to the casks due to the shallow depth of the flow across the site.

The closed circuit television (CCTV) is classified as not Important to Safety. The function of the CCTV is to assist in assessment of unauthorized penetration within the protected area as required per 10 CFR 73.51 (Reference 30). As noted in NUREG-1497 (Reference 31), adequate assessment may also be provided through onsite assessment by security personnel if an acceptable justification of timely assessment can be provided. A failure of the CCTV system would be discovered immediately by security personnel as indicated by a loss of continuously observed surveillance capabilities. Appropriate compensatory measures would then be initiated, eg, sending security personnel to CCTV observation locations to provide timely onsite surveillance.

The PFSF radiation monitors are classified as not Important to Safety since they are not needed to prevent or mitigate any credible accident that would adversely affect public health and safety. The PFSF will utilize various types of radiation monitors including area monitors, thermoluminescent dosimeters (TLD), portable hand held monitors, personnel dosimetry, and portable airborne monitors. The purpose of the area radiation monitors is to detect and alarm high radiation conditions in the canister transfer building. The purpose of TLDs is to record radiation doses received at the radiation area boundary, owner controlled area boundary, and by PFSF personnel. The purpose of the portable hand held monitors is to provide surveillance of radiation levels near worker locations during transfer operations. The purpose of the personnel dosimetry, which is worn by all workers in the canister transfer area, is to measure worker accumulated

dose while in the transfer area. The purpose of the portable airborne monitors is to ensure that, although the canisters are sealed, no airborne radioactivity is present during transfer operations. The use and presence of various types of monitors during facility operations provides defense in depth and will ensure that even if one fails, other monitors would detect high radiation conditions and alarm to provide safe working conditions for onsite personnel.

The temperature monitoring system is classified as not Important to Safety. The purpose of the temperature monitoring system is to provide continuous surveillance of each cask's temperature to ensure proper operation. In the event of a temperature monitor failure, the monitoring computer would not receive a signal. This would create an alarm informing personnel of a potential cask temperature problem. A temperature monitor system failure would alarm in the security monitoring area and security personnel would contact operations personnel. As discussed in SAR Section 8.2.8, under worst case conditions, cask temperature increases occur over a relatively long period of time, with no temperature limits reached for over a day. Assuming complete duct blockage of a HI-STORM storage cask, it would take 33 hours for the limiting component, the cask concrete, to reach its short-term temperature limit, while the fuel cladding and canister confinement boundary temperatures are substantially below their respective short-term limits at 72 hours. This would give operations personnel ample time to assess and resolve the problem.

THIS PAGE INTENTIONALLY LEFT BLANK

3.5 DECOMMISSIONING CONSIDERATIONS

This section of the principal design criteria satisfies 10 CFR 72.130, which requires provisions be made to facilitate decontamination of structures and equipment, minimize the quantity of radioactive wastes and contaminated equipment, and facilitate the removal of radioactive wastes and contaminated materials.

The PFSF shall be designed to facilitate safe and economical decommissioning activities in an expedient manner. Canister-based dry cask storage systems shall be used at the site because the canisters are designed to confine the spent fuel and facilitate its removal offsite. The spent fuel shall be sealed within the canister at the originating power plant to preclude contaminating other equipment and to enable the sealed canisters to be shipped and stored without having to open the canister or handle fuel assemblies. The PFSF shall be required to operate in a manner that supports decommissioning activities throughout the life of the facility.

The PFSF shall be designed to minimize the quantity of radioactive wastes generated and the amount of equipment that becomes contaminated. The canisters are not expected to have external surface contamination since measures are employed at the originating power plant to assure the external surfaces of the canisters are maintained in a clean condition. This minimizes the possibility of contaminating the Canister Transfer Building, canister transfer equipment, and storage casks. The Canister Transfer Building concrete floor, interior surfaces of the concrete transfer cells walls, and the low level waste holding cell shall be coated with paints or epoxy that accommodate and facilitate decontamination. Activation of the storage casks and concrete storage pads following long-term storage are expected to be negligible, allowing the release of the storage casks and pads as uncontrolled material. As canisters are shipped offsite and storage casks become available, the casks shall be

reused for storage of any new incoming spent fuel canisters in order to minimize potential future waste.

The PFSF site will not use site drainage collection systems that would require decommissioning since there are no liquid effluents at the site.

Solid LLW created from health physics survey materials and dry decontamination shall be disposed of in LLW containers authorized for transport to a LLW disposal facility.

The PFSF shall be designed to facilitate the removal of radioactive wastes and contaminated materials. When the storage period for any particular canister of spent fuel is completed, the canister shall be transferred into a shipping cask and shipped offsite. The storage cask shall then be surveyed, and any contamination or activation products removed for disposal as LLW. The design of the storage casks, with the internal surfaces completely lined with steel, facilitates any decontamination efforts which may be required. Storage Cask components which are determined to be below specified activation and contamination levels shall be segregated for disposal as uncontrolled material.

The fences, electrical support structures, and other storage area equipment will not require special decommissioning activities since no contamination is expected to be transferred to these structures.

The PFSF shall be designed and operated to maintain radiation exposures ALARA during all decommissioning and decontamination activities.

Further decommissioning considerations are addressed by the storage system vendor in Section 2.4 of the HI-STORM SAR and in Appendix B of the PFSF License Application, "Preliminary Decommissioning Plan."

3.6 SUMMARY OF DESIGN CRITERIA

A summary of design criteria is shown in Table 3.6-1. The table summarizes design parameters developed in this chapter, including the spent fuel stored at the PFSF site, and structural, thermal, radiation protection/shielding, criticality, and confinement design of the SSCs that are Important to Safety.

THIS PAGE INTENTIONALLY LEFT BLANK

3.7 REFERENCES

1. Final Safety Analysis Report for the Holtec International Storage and Transfer Operation Reinforced Module Cask System (HI-STORM 100 Cask System), Holtec Report HI-2002444, NRC Docket No. 72-1014, Revision 0, July 2000.

2. (deleted)

3. ASCE-7 (formerly ANSI A58.1), Minimum Design Loads for Buildings and Other Structures, American Society of Civil Engineers, 1995.

4. ANSI/ANS 57.9, Design Criteria For An Independent Spent Fuel Storage Installation (Dry Storage Type), 1984.

5. Local Climatological Data, Annual Summary with Comparative Data for 1991, Salt Lake City, Utah, National Oceanic and Atmospheric Administration, National Environmental Satellite Data and Information Service, National Climatic Data Center, March 1992.

6. Ashcroft, G.L., D.T. Jensen and J.L. Brown, 1992, Utah Climate; Utah Climate Center, Utah State University.

7. NUREG-0800, Standard Review Plan for the Review of Safety Analysis Reports for Nuclear Power Plants, U.S. Nuclear Regulatory Commission, July 1989.

8. Regulatory Guide 1.76, Design Basis Tornado for Nuclear Power Plants, U.S. Nuclear Regulatory Commission, April 1974.

9. Private Fuel Storage Facility Storage Facility Design Criteria, Section 4.0, Geotechnical Design Criteria, Revision 3.

10. Regulatory Guide 1.29, Seismic Design Classification, U.S. Nuclear Regulatory Commission, September 1978.

11. 10 CFR 100, Appendix A, Seismic and Geologic Siting Criteria for Nuclear Power Plants.

12. (deleted)

13. Regulatory Guide 1.61, Damping Values For Seismic Design Of Nuclear Power Plants, U.S. Nuclear Regulatory Commission, October 1973.

14. ASCE-4, Seismic Analysis of Safety-Related Nuclear Structures and Commentary on Standard for Seismic Analysis of Safety-Related Nuclear Structures, American Society of Civil Engineers, 1986.

15. NUREG-0554, Single-Failure-Proof Cranes for Nuclear Power Plants, U.S. Nuclear Regulatory Commission, 1979.

16. ASME NOG-1, Rules for Construction of Overhead and Gantry Cranes (Top Running Bridge, Multiple Bridge), 1989.

17. ASME Boiler and Pressure Vessel Code, Section III, American Society of Mechanical Engineers, 1992.

18. ACI-349, Code Requirements for Nuclear Safety Related Concrete Structures, American Concrete Institute, 1990.

19. ANSI/AISC N690-1994, Specification for the Design, Fabrication, and Erection of Steel Safety-Related Structures for Nuclear Facilities, American Institute of Steel Construction, 1994.

20. NUREG-0612, Control of Heavy Loads at Nuclear Power Plants, U.S. Nuclear Regulatory Commission, 1980.

21. NUREG-1536, Standard Review Plan for Dry Cask Storage Systems, Nuclear Regulatory Commission, 1997.

22. Regulatory Guide 1.91, Evaluations of Explosions Postulated to Occur on Transportation Routes near Nuclear Power Plants, U.S. Nuclear Regulatory Commission, February 1978.

23. 29 CFR 1910.179, Overhead and Gantry Cranes, Occupational Safety and Health Standards (OSHA).

24. NUREG/CR-6407, (INEL-95/0551), Classification of Transportation Packaging and Dry Spent Fuel Storage System Components According to Importance to Safety, 1996.

25. U.S. NRC Regulatory Guide 1.165, "Identification and Characterization of Seismic Sources and Determination of Safe Shutdown Earthquake Ground Motion," March 1997.

26. PFS Letter, Parkyn to Delligatti (NRC), Request for Exemption to 10 CFR 72.102(f)(1), dated April 2, 1999.

27. Geomatrix Consultants, Inc., Development of Design Ground Motions for the Private Fuel Storage Facility, Private Fuel Storage Facility, Skull Valley Utah; March 2001.

28. Geomatrix Consultants, Inc., Fault Evaluation Study and Seismic Hazard Assessment, Private Fuel Storage Facility, Skull Valley Utah; Final Report, February 1999, 3 volumes.

29. PFS Letter, Parkyn to Delligatti (NRC), Request for Exemption to 10 CFR 72.102(f)(1), dated August 24, 1999.

30. 10 CFR 73.51, Requirements for the Physical Protection of Stored Spent Nuclear Fuel or High-Level Radioactive Waste.

31. NUREG-1497, Interim Licensing Criteria for Physical Protection of Certain Storage of Spent Fuel, November 1994.

32. Stone and Webster Topical Report, SWECO 7703, "Missile-Barrier Interaction", September 1977

33. PFSF Meteorological Data taken during 1997 and 1998.

34. 10 CFR 72 Certificate of Compliance 1014, Rev. 0, HI-STORM 100 System, May, 2000.

35. Updated Structural Evaluation of An F16 Aircraft Impact on Hi-Storm Overpacks at the PFS Facility for Private Fuel Storage. Holtec Report No: HI-2033134 (Rev. 2) (2004).

TABLE 3.1-1

(deleted)

TABLE 3.1-2

(deleted)

TABLE 3.1-3
(Sheet 1 of 2)

(deleted)

TABLE 3.1-3
(Sheet 2 of 2)

(deleted)

TABLE 3.2-1

STRUCTURAL DESIGN CRITERIA FOR THE HI-STORM CANISTER CONFINEMENT BOUNDARY PER ASME NB-3220[1]

STRESS CATEGORY	DESIGN	ASME SERVICE CONDITION	
		LEVELS A & B	LEVEL D[2]
Primary Membrane, P_m	S_m	N /A[3]	AMIN ($2.4S_m$, $0.7S_u$)[4]
Local Membrane, P_L	$1.5S_m$	N /A	150% of P_m Limit
Membrane plus Primary Bending, $P_L + P_b$	$1.5S_m$	N /A	150% of P_m Limit
Primary Membrane plus Primary Bending, $P_m + P_b$	$1.5S_m$	N /A	150% of P_m Limit
Membrane plus Primary Bending plus Secondary, $P_L + P_b + Q$	N/A	$3S_m$	N/A
Average Shear Stress [5]	$0.6S_m$	$0.6S_m$	$0.42S_u$

NOTES

1. Stress combinations including F (peak stress) apply to fatigue evaluations only.
2. Governed by Appendix F, Paragraph F-1331 of the ASME Code, Section III.
3. No specific stress intensity limit applicable.
4. Average primary shear stress across a section loaded in pure shear shall not exceed $0.42S_u$.
5. Governed by NB-3227.2 or F-1331.1(d)

TABLE 3.2-2

STRUCTURAL DESIGN CRITERIA FOR THE STEEL STRUCTURES OF THE HI-STORM STORAGE CASK AND HI-TRAC[1] TRANSFER CASK PER ASME NF-3260

STRESS CATEGORY	ASME SERVICE CONDITION[2]		
	DESIGN + LEVEL A	LEVEL B	LEVEL D[3]
Primary Membrane, P_m	S	1.33S	AMAX ($1.2S_y$, $1.5S_M$) but $< 0.7S_u$
Primary Membrane plus Primary Bending, $P_m + P_b$	1.5S	1.995S	150% of P_m
Shear Stress (Average)	0.6S	0.6S	$< 0.42S_u$

NOTES

1. Only service condition Level A is applicable to the HI-TRAC steel structure.
2. Limits for Design and Level A are on maximum stress. Limits for Level D are on maximum stress intensity.
3. Governed by Appendix F, Paragraph F-1332 of the ASME Code, Section III.

TABLE 3.2-3

(deleted)

TABLE 3.4-1

QUALITY ASSURANCE CLASSIFICATION OF STRUCTURES, SYSTEMS, AND COMPONENTS

IMPORTANT TO SAFETY	NOT IMPORTANT TO SAFETY
Classification Category A	Storage Facility Infrastructure
Spent Fuel Canister	Security and Heath Physics Building
	Administration Building
Classification Category B	Operations and Maintenance Building
Storage Cask	Intrusion Detection System
Transfer Cask	CCTV System
Associated Lifting Devices	Restricted Area Lighting
Canister Transfer Building	Security Alarm Stations
Canister Transfer Overhead Bridge Crane	Electrical Power - UPS
Canister Transfer Semi-gantry Crane	Electrical Power - Backup Diesel Generator
Seismic Support Struts	Electrical Power - Normal
	Yard/Building Lighting
Classification Category C	Cask Transporter
Cask Storage Pads	Radiation Monitors
	Temperature Monitoring System
	Communication Systems
	Fire Detection/Suppression
	Water Supply Systems
	Septic Systems
	Access Road
	Road Transport Components
	Railroad Line Components

TABLE 3.6-1
(Sheet 1 of 5)

SUMMARY OF PFSF DESIGN CRITERIA

DESIGN PARAMETERS	DESIGN CONDITIONS	APPLICABLE CRITERIA AND CODES
GENERAL		
PFSF Design Life	40 years	PFSF Specifications
Storage Capacity	40,000 MTU of commercial spent fuel	PFSF Specifications
Number of Casks	approximately 4,000 casks	PFSF Specifications
SPENT FUEL SPECIFICATIONS		
Type of Fuel	See Appendix B of HI-STORM C. of C.	Reference 34
Fuel Characteristics	See Appendix B of HI-STORM C. of C.	Reference 34
STORAGE SYSTEM CHARACTERISTICS		
Canister Capacity	HI-STORM 24 PWR assemblies/canister 68 BWR assemblies/canister	HI-STORM SAR, Section 1.1
Weights (maximum)	HI-STORM Storage Cask - 268,334 lbs. Loaded Canister - 87,241 lbs. Transfer Cask - 152,636 lbs. Shipping Cask - 153,080 lbs.	HI-STORM SAR, Table 3.2.1 " HI-STORM SAR, Table 3.2.2 Shipping SAR, Table 2.2.1

TABLE 3.6-1
(Sheet 2 of 5)

SUMMARY OF PFSF DESIGN CRITERIA

DESIGN PARAMETERS	DESIGN CONDITIONS	APPLICABLE CRITERIA AND CODES
STRUCTURAL DESIGN		
Wind	90 mph, normal speed	ASCE-7
Tornado	240 mph, maximum speed 190 mph, rotational speed 50 mph, translational speed 150 ft, radius of max speed 1.5 psi, pressure drop 0.6 psi/sec rate of drop	Reg. Guide 1.76
Tornado Missiles	115 lb. wood plank, 190 ft/sec 287 lb. 6" schedule 40 pipe, 33 ft/sec 9 lb. 1" diameter steel rod, 26 ft/sec 1124 lb. wooden utility pole, 85 ft/sec 750 lb. 12" schedule 40 pipe, 23 ft/sec 3990 lb. Automobile, 134 ft/sec	NUREG-0800, Section 3.5.1.4
Flood	N/A - PFSF is not in a flood plain and is above the PMF elevation	PFSF SAR Section 2.3.2.3
Seismic	0.711g, horz.(both directions) & 0.695g vert. Design basis ground acceleration	10 CFR 72.102, Reg. Guide 1.165
Snow & Ice	P(g) = 45 psf	ASCE-7/County
Allowable Soil Pressure	Static = 4 ksf max Dynamic = Varies by footing type/size	PFSF SAR Section 2.6.1.12
Explosion Protection	The PFSF design and layout shall assure that the peak positive incident overpressure at important to safety SSCs does not exceed 1.0 psi from credible onsite and offsite explosions.	Reg. Guide 1.91
Ambient Conditions	Low Temperature = -30°F Max. Annual Average Temp. = 51°F Average Daily Max. Temp. = 95°F Humidity = 0 to 100 %	NOAA Data-Salt Lake City UT Climate Data UT Climate Data

TABLE 3.6-1
(Sheet 3 of 5)

SUMMARY OF PFSF DESIGN CRITERIA

DESIGN PARAMETERS	DESIGN CONDITIONS	APPLICABLE CRITERIA AND CODES
HI-STORM 100 Cask System Load Criteria	Canister: } See HI-STORM Internals: } SAR, Table 2.2.6 Storage Cask: } Transfer Cask: }	ASME III, NB ASME III, NG ASME III NF, ACI-349 ASME III NF, ANSI N14.6
Cask Storage Pads Load Combinations	<u>Normal Conditions</u> $U_c > 1.4D + 1.7L$ $U_c > 1.4D + 1.7L + 1.7H$ <u>Off-Normal Conditions</u> $U_c > 0.75(1.4D + 1.7L + 1.7H + 1.7T)$ $U_c > 0.75(1.4D + 1.7L + 1.7H + 1.7T + 1.7W)$ <u>Accident-Level Conditions</u> $U_c > D + L + H + T + (E \text{ or } A \text{ or } W_t \text{ or } F)$ $U_c > D + L + H + T_a$	ANSI/ANS 57.9 ACI-349
Canister Transfer Building Structure Load Combinations (Reinforced Concrete)	<u>Normal Conditions</u> $U_c > 1.4D + 1.7L$ $U_c > 1.4D + 1.7L + 1.7H$ <u>Off-Normal Conditions</u> $U_c > 0.75(1.4D + 1.7L + 1.7H + 1.7T)$ $U_c > 0.75(1.4D + 1.7L + 1.7H + 1.7T + 1.7W)$ <u>Accident-Level Conditions</u> $U_c > D + L + H + T + (E \text{ or } A \text{ or } W_t \text{ or } F)$ $U_c > D + L + H + T_a$	ANSI/ANS 57.9 ACI-349
Canister Transfer Building Structure Load Combinations (Structural Steel)	<u>Normal Conditions</u> $S \text{ and } S_v > D + L \text{ or } D + L + H$ <u>Off-Normal Conditions</u> $1.3 (S \text{ and } S_v) > D + L + H + W$ $1.5S > D + L + H + T + W$ $1.4 S_v > D + L + H + T + W$ <u>Accident-Level Conditions</u> $1.6S > D + L + T + (W_t \text{ or } E)$ $1.4S_v > D + L + T + (W_t \text{ or } E)$	ANSI/ANS 57.9 ANSI/AISC N690

TABLE 3.6-1
(Sheet 4 of 5)

SUMMARY OF PFSF DESIGN CRITERIA

DESIGN PARAMETERS	DESIGN CONDITIONS	APPLICABLE CRITERIA AND CODES
Canister Transfer Building Foundation Load Combinations	Normal Conditions $U_f > 1.4D + 1.7L + 1.7G$ $U_f > 1.4D + 1.7L + 1.7H + 1.7G$ Off-Normal Conditions $U_f > 0.75\ (1.4D + 1.7L + 1.7H + 1.7T + 1.7G)$ $U_f > 0.75\ (1.4D + 1.7L + 1.7H + 1.7T + 1.7W + 1.7G)$ Accident-Level Conditions $U_f > D + L + H + T + G + (E \text{ or } A \text{ or } W_t \text{ or } F)$ $U_f > D + L + H + T_a + G$	ANSI/ANS 57.9 ACI-349
Canister Transfer Crane Designs	Type I, single-failure-proof 200 ton overhead bridge crane 150 ton semi-gantry crane	ASME NOG-1, NUREG 0554, & NUREG 0612
Canister Transfer Crane Load Combinations	Normal Conditions $P_c = P_{db} + P_{dt} + (P_{lr} \text{ or } P_p)$ $P_c = P_{db} + P_{dt} + P_{lr} + (P_v \text{ or } P_{ht} \text{ or } P_{hl}) + P_{wo}$ Off-Normal Conditions $P_c = P_{db} + P_{dt} + P_a + P_{wo}$ Accident-Level Conditions $P_c = P_{db} + P_{dt} + P_{cs} + P_e + P_{wo}$ $P_c = P_{db} + P_{dt} + P_e + P_{wo}$ $P_c = P_{db} + P_{dt} + P_{wt}$	ASME NOG-1
THERMAL DESIGN		
Design Temperatures (°F) (maximum)	HI-STORM / Norm / Off-norm / Acc Stor. cask conc. 200 350 350 Outer shell steel 350 600 600 Lid top plate 350 550 550 Inner shell steel & remaining steel 350 400 400 PWR Cladding 692 1058 1058 BWR Cladding 742 1058 1058	HI-STORM SAR, Table 2.2.3

TABLE 3.6-1
(Sheet 5 of 5)

SUMMARY OF PFSF DESIGN CRITERIA

DESIGN PARAMETERS	DESIGN CONDITIONS	APPLICABLE CRITERIA AND CODES
RADIATION PROTECTION/SHIELDING DESIGN		
Storage Systems Design Dose Rate Limits	HI-STORM cask side surface - 40 mrem/hr cask inlet/exit vent area - 60 mrem/hr cask top surface - 10 mrem/hr	HI-STORM SAR, Section 2.3.5.2
Individual Workers Dose Rate	Total eff. dose equiv.(TEDE) - 5 rem/yr Dose to eye lens - 15 rem/yr Dose to skin & extremities - 50 rem/yr	10 CFR 20.1201
Restricted Area Boundary Dose Rate	2 mrem/hr, max.	10 CFR 20.1301
Owner Controlled Area Boundary Dose Rate	25 mrem/yr whole body & 75 mrem/yr thyroid, max. 25 mrem/yr to any other critical organ 5 rem accident dose TEDE, or total organ dose equivalent of 50 rem (one time)	10 CFR 72.104 10 CFR 72.106
CRITICALITY DESIGN		
Control Method	Incorporation of Boral in canister fuel basket walls, and favorable geometry provided by the canister basket	HI-STORM SAR, 2.3.4.1
K_{eff}	< 0.95	NUREG-1536
CONFINEMENT DESIGN		
Confinement Method	Welded closed steel canister	HI-STORM SAR, 2.3.2.1
Confinement Barrier Design	HI-STORM canister: ASME III, NB	HI-STORM SAR, 2.3.2.1
Maximum Leak Rate	5.0E-6 atm cm^3 / sec (HI-STORM)	HI-STORM SAR Section 12, Tech. Spec Table 3-1;

CHAPTER 4

FACILITY DESIGN

TABLE OF CONTENTS

SECTION	TITLE	PAGE
4.1	SUMMARY DESCRIPTION	4.1-1
4.1.1	Location and Layout	4.1-2
4.1.2	Principal Features	4.1-2
4.1.2.1	Site Boundary	4.1-3
4.1.2.2	Controlled Area	4.1-3
4.1.2.3	Site Utility Supplies and System	4.1-3
4.1.2.4	Storage Facilities	4.1-4
4.1.2.5	Stacks	4.1-4
4.2	STORAGE STRUCTURES	4.2-1
4.2.1	HI-STORM 100 Cask System	4.2-2
4.2.1.1	Design Specifications	4.2-2
4.2.1.2	System Layout	4.2-3
4.2.1.2.1	Plans and Sections	4.2-3
4.2.1.2.2	Confinement Features	4.2-3
4.2.1.3	Function	4.2-3
4.2.1.4	Components	4.2-4
4.2.1.5	Design Bases and Safety Assurance	4.2-5
4.2.1.5.1	Structural Design	4.2-5
4.2.1.5.2	Thermal Design	4.2-13
4.2.1.5.3	Shielding Design	4.2-17
4.2.1.5.4	Criticality Design	4.2-18
4.2.1.5.5	Confinement Design	4.2-21

TABLE OF CONTENTS (cont.)

SECTION	TITLE	PAGE
4.2.2	(deleted)	4.2-22
4.2.3	Cask Storage Pads	4.2-23
4.2.3.1	Design Specifications	4.2-23
4.2.3.2	Plans and Sections	4.2-24
4.2.3.3	Function	4.2-24
4.2.3.4	Components	4.2-24
4.2.3.5	Design Bases and Safety Assurance	4.2-25
4.2.3.5.1	Storage Pad Analysis	4.2-25
4.2.3.5.2	Storage Pad Design	4.2-31
4.2.3.5.3	Storage Pad Settlement	4.2-32
4.2.3.5.4	Cask Stability	4.2-33

TABLE OF CONTENTS (cont.)

SECTION	TITLE	PAGE
4.3	AUXILIARY SYSTEMS	4.3-1
4.3.1	Ventilation and Offgas Systems	4.3-1
4.3.2	Electrical Systems	4.3-1
4.3.2.1	Major Components and Operating Characteristics	4.3-1
4.3.2.2	Safety Considerations and Controls	4.3-2
4.3.2.3	Restricted Area Lighting	4.3-3
4.3.3	Air Supply Systems	4.3-4
4.3.4	Steam Supply and Distribution System	4.3-4
4.3.5	Water Supply System	4.3-5
4.3.6	Sewage Treatment System	4.3-5
4.3.7	Communications and Alarm Systems	4.3-5
4.3.8	Fire Protection System	4.3-6
4.3.8.1	Design Basis	4.3-6
4.3.8.2	System Description	4.3-14
4.3.8.3	System Evaluation	4.3-15
4.3.8.4	Inspection and Testing Requirements	4.3-17
4.3.8.5	Personnel Qualification and Training	4.3-17
4.3.9	Maintenance System	4.3-17
4.3.9.1	Major Components and Operating Characteristics	4.3-17
4.3.9.2	Safety Considerations and Controls	4.3-18
4.3.10	Cold Chemical Systems	4.3-18
4.3.11	Air Sampling Systems	4.3-19
4.3.12	Gas Utilities	4.3-19
4.3.13	Diesel Fuel Supply	4.3-20
4.3.13.1	Fueling of On-site Vehicles Used at the PFSF	4.3-20
4.3.13.2	Fueling of Locomotives Used on the Low Corridor Rail Line	4.3-21

TABLE OF CONTENTS (cont.)

SECTION	TITLE	PAGE
4.3.13.3	Fueling of Heavy-Haul Vehicles Used for the Intermodal Transfer Point	4.3.21
4.4	DECONTAMINATION SYSTEMS	4.4-1
4.4.1	Equipment Decontamination	4.4-1
4.4.2	Personnel Decontamination	4.4-1
4.5	SHIPPING CASKS AND ASSOCIATED COMPONENTS	4.5-1
4.5.1	HI-STAR Shipping Cask System	4.5-2
4.5.2	(deleted)	4.5-2
4.5.3	Shipping Cask Repair and Maintenance	4.5-3
4.5.4	Skull Valley Road / Intermodal Transfer Point	4.5-3
4.5.4.1	Intermodal Transfer Point	4.5-3
4.5.4.2	Shipping Cask Heavy Haul Tractor/Trailer	4.5-4
4.5.5	Low Corridor Rail Line	4.5-5
4.5.5.1	Rail Line	4.5-5
4.5.5.2	Shipping Cask Rail Car	4.5-5
4.6	CATHODIC PROTECTION	4.6-1
4.7	SPENT FUEL HANDLING OPERATION SYSTEMS	4.7-1
4.7.1	Canister Transfer Building	4.7-3
4.7.1.1	Design Specifications	4.7-3a
4.7.1.2	Plans and Sections	4.7-4
4.7.1.3	Function	4.7-4
4.7.1.4	Components	4.7-4

TABLE OF CONTENTS (cont.)

SECTION	TITLE	PAGE
4.7.1.4.1	Seismic Support Struts	4.7-5
4.7.1.5	Design Bases and Safety Assurance	4.7-5
4.7.1.5.1	Structural Design	4.7-6
4.7.1.5.2	Shielding Design	4.7-8a
4.7.1.5.3	Structural Analysis	4.7-8b
4.7.2	Canister Transfer Cranes	4.7-9
4.7.2.1	Design Specifications	4.7-9
4.7.2.2	Plans and Sections	4.7-11
4.7.2.3	Function	4.7-11
4.7.2.4	Components	4.7-12
4.7.2.5	Design Bases and Safety Assurance	4.7-12
4.7.2.5.1	Maximum Loads Applicable to the Overhead Bridge Crane	4.7-12a
4.7.2.5.2	Maximum Loads Applicable to Both Overhead Bridge Crane and Semi-Gantry Crane	4.7-13
4.7.2.5.3	Seismic Analysis	4.7-13
4.7.2.5.4	Single-Failure-Proof Analysis	4.7-13e
4.7.2.5.5	Crane Design	4.7-13g
4.7.3	HI-STORM Transfer Equipment	4.7-14
4.7.3.1	Design Specifications	4.7-14
4.7.3.2	Plans and Sections	4.7-14
4.7.3.3	Function	4.7-14
4.7.3.4	Components	4.7-15
4.7.3.4.1	Transfer Cask	4.7-15
4.7.3.4.2	Transfer Cask Trunnions	4.7-15

TABLE OF CONTENTS (cont.)

SECTION	TITLE	PAGE
4.7.3.4.3	Shipping and Transfer Cask Lift Yokes	4.7-16
4.7.3.4.4	Canister Downloader	4.7-16
4.7.3.4.5	Canister Lift Cleats	4.7-16
4.7.3.4.6	HI-STORM Storage Cask Lifting Lugs	4.7-16
4.7.3.5	Design Bases and Safety Assurance	4.7-17
4.7.3.5.1	Structural Design	4.7-17
4.7.3.5.2	Thermal Design	4.7-20
4.7.3.5.3	Shielding Design	4.7-21
4.7.4	(deleted)	4.7-23
4.7.5	Cask Transporter	4.7-24
4.7.5.1	Design Specifications	4.7-24

4.7.5.2	Plans and Sections	4.7-24
4.7.5.3	Function	4.7-24
4.7.5.4	Components	4.7-24
4.7.5.5	Design Bases and Safety Assurance	4.7-25
4.8	REFERENCES	4.8-1

TABLE OF CONTENTS (cont.)

LIST OF TABLES

TABLE	TITLE
4.1-1	PFSF COMPLIANCE WITH GENERAL DESIGN CRITERIA (10 CFR 72, SUBPART F) (7 Sheets)
4.2-1	PHYSICAL CHARACTERISTICS OF THE HI-STORM CANISTER
4.2-2	PHYSICAL CHARACTERISTICS OF THE HI-STORM STORAGE CASK
4.2-3	HI-STORM STORAGE SYSTEM STEADY-STATE TEMPERATURE EVALUATION UNDER NORMAL CONDITIONS OF STORAGE
4.2-4	(deleted)
4.2-5	(deleted)
4.2-6	(deleted)
4.2-7	STATIC PAD ANALYSIS MAXIMUM RESPONSE VALUES
4.2-8	DYNAMIC PAD ANALYSIS MAXIMUM RESPONSE VALUES
4.7-1	PHYSICAL CHARACTERISTICS OF THE HI-TRAC TRANSFER CASK
4.7-2	HI-TRAC TRANSFER CASK STEADY-STATE TEMPERATURE EVALUATION
4.7-3	(deleted)

TABLE OF CONTENTS (cont.)

LIST OF FIGURES

FIGURE	TITLE
4.1-1	CANISTER TRANSFER BUILDING
4.1-2	SECURITY AND HEALTH PHYSICS BUILDING
4.1-3	ADMINISTRATION BUILDING
4.1-4	OPERATIONS AND MAINTENANCE BUILDING
4.2-1	HI-STORM STORAGE COMPONENTS
4.2-2	HI-STORM STORAGE CANISTER (3 Sheets)
4.2-3	HI-STORM STORAGE CASK
4.2-4	(deleted)
4.2-5	(deleted)
4.2-6	(deleted)
4.2-7	CASK STORAGE PADS
4.2-8	COMPUTER MODEL OF CASK STORAGE PAD
4.3-1	CANISTER TRANSFER BUILDING FIRE ZONES & BARRIERS
4.5-1	HI-STAR SHIPPING CASK (2 Sheets)
4.5-2	(deleted)
4.5-3	INTERMODAL TRANSFER POINT (2 Sheets)
4.5-4	SHIPPING CASK HEAVY HAUL TRACTOR/TRAILER
4.5-5	150 TON DEPRESSED CENTER RAILCAR
4.5-6	LOW CORRIDOR RAIL LINE (4 Sheets)

TABLE OF CONTENTS (cont.)

LIST OF FIGURES

FIGURE	TITLE
4.7-1	CANISTER TRANSFER BUILDING (3 Sheets)
4.7-2	HI-TRAC TRANSFER CASK
4.7-3	(deleted)
4.7-4	CASK TRANSPORTER
4.7-5	CANISTER TRANSFER BRIDGE CRANE
4.7-6	CANISTER TRANSFER SEMI-GANTRY CRANE
4.7-7	SEISMIC SUPPORT STRUTS
4.7-8	CANISTER TRANSFER BUILDING MISSILE BARRIERS

CHAPTER 4

FACILITY DESIGN

4.1 SUMMARY DESCRIPTION

This chapter identifies the Facility Design for the Private Fuel Storage Facility (PFSF). The Principal Design Criteria used as a basis for the Facility Design is described in Chapter 3. The design of the structures, systems, and components (SSCs) and how the design ensures quality standards are met in accordance with 10 CFR 72.122(a) is described.

The descriptions presented in this chapter specifically focus on SSCs that are classified as being Important to Safety; SSCs that are not Important to Safety are also addressed where appropriate. The SSCs that are classified as being Important to Safety are identified in Chapter 3 as the storage systems, cask storage pads, canister transfer cranes, and Canister Transfer Building.

The PFSF utilizes the HI-STORM 100 Cask System (HI-STORM) designed by Holtec International (Holtec). Holtec submitted a Safety Analysis Report (SAR) to the U.S. Nuclear Regulatory Commission (NRC) for the HI-STORM system (Reference 1). The NRC has issued a Certificate of Compliance for Holtec's HI-STORM 100 storage cask system (Reference 79). The spent fuel at the PFSF will be stored in casks designed in accordance with Certificate of Compliance No. 1014, Amendment 0 for the Hi-STORM 100 Storage Cask System, modified to incorporate the lid shims and weld modifications described in Holtec Report HI-2033134 as revised (Reference 95) at pp. 7-14 through 7-16, 8-28, and Figures 26A and 26B.

The HI-STORM storage system SAR contains the generic design of its storage system and transfer equipment. This chapter summarizes the generic design and how the generic design complies with the site-specific criteria at the PFSF.

The PFSF is designed in accordance with the General Design Criteria set forth in 10 CFR 72, Subpart F. Table 4.1-1 summarizes compliance with these criteria.

4.1.1 Location and Layout

The PFSF is located on the Skull Valley Indian Reservation in northwestern Utah, approximately 27 miles west-southwest of Tooele City. The site location is shown on Figure 1.1-1. The PFSF site layout is shown on Figure 1.1-2 and the PFSF general arrangement is shown on Figure 1.2-1.

4.1.2 Principal Features

The principal features of the PFSF consist of the storage area, including cask storage pads, the Canister Transfer Building, shown on Figure 4.1-1, and the Security and Health Physics Building, shown on Figure 4.1-2. The cask storage pads, the Canister Transfer Building, and the Security and Health Physics Building are located within the Restricted Area (RA). The Canister Transfer Building facilitates the transfer of the canister from the shipping cask to the storage cask and houses the overhead bridge and semi-gantry cranes used in the transfer process. The Security and Health Physics Building is the entrance point for the RA and houses offices and equipment for security and health physics personnel. The RA provides security and physical protection of spent fuel and restricts access because of potential radiation doses from the spent fuel. The RA consists of approximately 99 acres of storage area surrounded by a chain link security fence, 20 ft isolation zone, and chain link nuisance fence. The design capacity of the RA is approximately 500 concrete cask storage pads capable of storing up to 8 storage casks each for a total of approximately 4,000 storage casks. The storage pad area is surfaced with compacted gravel to enable transport of the storage casks from the Canister Transfer Building to the storage pads.

The storage area is surrounded by a perimeter road. The Administration Building, shown on Figure 4.1-3, and the Operations and Maintenance (O&M) Building, shown on Figure 4.1-4, which are not directly associated with the actual handling or storage of spent fuel, are located approximately one-half mile and one-third mile respectively southeast of the storage area. The Administration, and the O&M buildings house offices and equipment for administrative and maintenance personnel.

The facility layout is also designed to ensure that all SSCs are accessible to emergency equipment in the event of an emergency condition per 10 CFR 72.122(g).

4.1.2.1 Site Boundary

The PFSF site boundary is identified by the owner controlled area (OCA). The OCA boundary is shown on Figure 1.1-2.

4.1.2.2 Controlled Area

The controlled area, established by providing a minimum distance of 100 meters from storage and handling operations to the controlled boundary in accordance with 10 CFR 72.106, is the same as the site boundary discussed in Section 4.1.2.1 above, defined as the OCA.

4.1.2.3 Site Utility Supplies and Systems

The site requires few utility supplies and systems. None of the SSCs classified as Important to Safety require utility services to maintain their safety function. Therefore, the site utility services do not need to be considered as being Important To Safety and need no redundant components, as otherwise would be required by 10 CFR 72.122(k). Electric power is provided to the PFSF for lighting, general utilities, security system, and

cranes. Although the overhead bridge and semi-gantry cranes are Important to Safety, their safety function does not rely on electric power. A standby diesel-generator provides backup power for the security system, emergency lighting loads, storage cask temperature monitoring system, and communication systems.

4.1.2.4 Storage Facilities

There are no ancillary storage facilities such as holding ponds, chemical gas storage vessels, or other open-air tanks required to maintain Important to Safety functions at the PFSF. However, the PFSF does utilize water tanks for fire protection and propane gas supply tanks for the Canister Transfer Building, Administration, O&M, and Security and Health Physics buildings heating. The water tanks are located near the Security & Health Physics Building. The propane tank or tanks that supply propane for heating the Administration and O&M buildings will be relatively small (less than 5,000 gallons capacity), located in the vicinity of these buildings. The group of four propane storage tanks that will supply the Canister Transfer Building and Security and Health Physics Building will have a total capacity of no greater than 20,000 gallons, and each individual tank shall have a capacity no greater than 5,000 gallons. All of these propane tanks shall be located a minimum distance of 1,800 ft from the Canister Transfer Building and the cask storage area, as discussed in Sections 4.3.12 and 8.2.4.

4.1.2.5 Stacks

There are no stacks required or provided at the PFSF.

4.2 STORAGE STRUCTURES

The storage SSCs are used to safely store spent fuel at the PFSF. The storage SSCs at the PFSF consist of the following:

- HI-STORM 100 Cask System
- Cask storage pads

The storage SSCs are designed to ensure adequate safety and to mitigate the effects of site environmental conditions, natural phenomena, and accidents in accordance with 10 CFR 72.122(b) and 10 CFR 72.128(a). The SSC design is described in Chapter 8 and in the HI-STORM SAR.

The storage SSCs are designed to permit testing, inspection, and maintenance of the systems in accordance with 10 CFR 72.122(f). The acceptance test and maintenance program of the storage system is specified in HI-STORM SAR Chapter 9. Because of the passive nature of the storage system design, inspection and maintenance requirements are minimal. Surveillance requirements associated with operational control and limits are described in Chapter 10. Inspection and testing is performed in accordance with the Quality Assurance program described in Chapter 11.

Each of the storage SSCs are described in the following sections. Figures are provided to illustrate the components and their function.

4.2.1 HI-STORM 100 Cask System

The HI-STORM storage system consists of metal canisters, concrete storage casks, and associated transfer equipment. The following sections provide an analysis of the HI-STORM storage system canister and storage cask design relative to the storage requirements of the PFSF. Types and characteristics of fuel to be stored, site environmental conditions, support structures, and support systems are shown to be within the design criteria envelope of the HI-STORM SAR, thus ensuring no unanalyzed safety conditions for storage using the HI-STORM storage system exist at the PFSF. The HI-STORM canister transfer equipment is described in Section 4.7.3.

4.2.1.1 Design Specifications

The design, fabrication, and construction specifications used for the HI-STORM storage system components are identified in the HI-STORM SAR Table 2.2.6 and are summarized as follows:

- Metal canister -

Pressure boundary	ASME BPVC Section III, Subsection NB
Internal assembly	ASME BPVC Section III, Subsection NG

- Concrete storage cask -

Steel	ASME BPVC Section III, Subsection NF
Concrete	ACI-349

4.2.1.2 System Layout

The HI-STORM storage system consists of a sealed metal canister placed inside of a vertical concrete storage cask. Each canister holds up to 24 PWR or 68 BWR spent fuel assemblies in an internal basket.

4.2.1.2.1 Plans and Sections

The HI-STORM storage components are illustrated in Figure 4.2-1. The metal canister is shown in Figure 4.2-2 and the concrete storage cask in Figure 4.2-3. The cask lid shims and lid stud tolerances are depicted in Figures 26A and 26B and on page 7-14 of Hoiltec Report HI-2033134, as revised (Reference 95).

4.2.1.2.2 Confinement Features

The HI-STORM canister is the confinement boundary for the HI-STORM storage system. The confinement features of the canister consist of the canister shell, a bottom base plate, the canister lid, and the canister closure ring, which form an integrally welded vessel for the storage of spent fuel assemblies. The confinement features of the HI-STORM canister are further discussed in Section 4.2.1.5.5.

4.2.1.3 Function

The HI-STORM storage system is used to safely store spent nuclear fuel under dry storage conditions. The system maintains confinement, prevents criticality, provides for passive cooling by natural convection, and provides shielding under all normal, off-normal, and accident conditions that may occur during storage or handling operations at the PFSF.

4.2.1.4 Components

The major components of the HI-STORM storage system that are classified as Important to Safety are a sealed metal canister and a concrete storage cask.

The canister (called a multi-purpose canister or MPC in the HI-STORM SAR) is a totally sealed, welded structure of cylindrical profile with flat ends. Each canister consists of a honeycomb fuel basket, a baseplate, canister shell, a lid, and a closure ring. The canister provides the confinement boundary for the stored fuel. The design of the canister provides a means to dissipate heat and the capability to withstand large impact loads associated with potential accidents. Canisters with different internal arrangements accommodate PWR and BWR intact spent fuel, damaged fuel, fuel debris, and MOX fuel. The lid provides top shielding and lifting provisions for the canister. The fuel basket assembly provides support for the fuel assemblies. Canisters employ the use of fuel assembly geometry and poison plates for criticality control. Flux traps are located between each storage cell on the PWR canister to provide additional criticality control. The canister is constructed entirely from stainless steel except for the neutron absorber (Boral, an aluminum alloy and boron carbide composite) and the aluminum heat conduction elements. The outer diameter and cylindrical height of each canister are fixed.

The HI-STORM concrete storage cask (called a storage overpack in the HI-STORM SAR) is a concrete and steel cylindrical structure that serves as a missile barrier, radiation shield, provides flow paths for natural convective heat transfer, provides stability for the system, and absorbs energy of the canister under drop events and non-credible hypothetical tipover accident events.

The storage cask has a steel/concrete/steel composition to attenuate the loads transmitted to the canister during a natural phenomenon or non-credible hypothetical accident event and provides a shield against the radiation emitted by the spent fuel.

The 2 inch thick inner liner and 0.75 inch thick outer steel shell are filled with 26.75 inches of 3,000 psi concrete. The storage cask contains large penetrations near its lower and upper extremities to permit natural circulation of air to provide for the passive cooling of the canister and spent fuel. The cask has four air inlet ducts located in the base of the cask and four air outlet ducts located near the top of the cask. The cooling air enters the inlet ducts and flows upward in the annulus between the canister and the concrete cask, and exits at the outlet ducts.

The physical characteristics of the canister and storage cask are listed in Tables 4.2-1 and 4.2-2, respectively.

4.2.1.5 Design Bases and Safety Assurance

The design bases for the HI-STORM storage system are detailed in the HI-STORM SAR. Structural, thermal, shielding, criticality, and confinement design are applicable to the HI-STORM storage system and are addressed in the following sections.

4.2.1.5.1 Structural Design

The structural evaluation for the HI-STORM storage system is contained in HI-STORM SAR Chapter 3. Analysis of the storage system components has been performed for normal, off-normal and accident/natural phenomenon conditions. The structural analyses show the structural integrity of the HI-STORM system is maintained under all credible loads with a high level of assurance to support the conclusion that the confinement, criticality control, radiation shielding, and retrievability criteria are met.

The following verifies that the PFSF site specific criteria are enveloped by the HI-STORM storage system design.

A. Dead and Live Loads

Dead loads are addressed in HI-STORM SAR Sections 3.4.4.3.1 and 3.4.4.3.2. The dead load of the storage cask includes the weight of the concrete and steel cask and the storage canister loaded with spent fuel. As identified in HI-STORM SAR Table 2.1.6, the dead load of the storage cask is calculated assuming the heaviest PWR assembly (B&W 15 x 15 fuel assembly type, wt = 1,680 lb) and the heaviest BWR assembly (GE 8 x 8 fuel assembly type, wt = 700 lb). The dead loads of the canister and the storage cask are shown to be within applicable code allowables and therefore meet the PFSF design criteria in Section 3.2.1 for dead loads.

The storage cask is subjected to two live loads, both of which act on the top of the storage cask: snow loads and the HI-TRAC transfer cask weight (during transfer operations) containing a fully loaded canister. The HI-STORM SAR uses a conservative worst case ground snow load of 100 psf per HI-STORM SAR Table 2.2.8, which exceeds the PFSF site snow load of 45 psf applicable to this geographic location. The live load capacity of the storage cask from the weight of the HI-TRAC transfer cask with a fully loaded canister is shown in HI-STORM SAR Section 3.4.4.3.2.1 to be adequate. Therefore, the live loads used in the HI-STORM analysis bound the PFSF design criteria specified in Sections 3.2.2 and 3.2.3 for live loads and snow loads.

B. Internal and External Pressure

Internal and external pressure loads are addressed in HI-STORM SAR Sections 3.4.4.3.1.2 and 3.4.4.3.1.7, respectively. The design pressure applied to the canister is 100 psig for internal pressures and 0 psig (ambient) for external pressures for normal and off-normal conditions per HI-STORM SAR Table 2.2.1. For accident conditions, the design pressure applied to the canister is 125 psi for internal and 60 psi for external. HI-STORM SAR Table 4.4.14 indicates pressures calculated to exist in the canister under

various conditions. The canisters are originally backfilled with helium to a pressure of approximately 30 psi at an assumed temperature of 70° F, then increase to pressures of 58.9 psi for the HI-STORM PWR canister (MPC-24) and 57.3 psi for the HI-STORM BWR canister (MPC-68) as temperatures equilibrate to those associated with the 80° F day/night average ambient temperatures evaluated in the thermal analysis. Additionally, Holtec evaluated canister internal pressures that would occur for 1, 10, and 100 percent fuel rod cladding rupture, assuming all rod fill gas and a conservative fraction of fission product gases are released from the failed rods into the canister. With 100 percent fuel rod cladding rupture at normal operating temperatures, canister pressure was calculated to reach 97.6 psi for the MPC-24 and 87.4 psi for the MPC-68, which are below the design internal pressure for accident conditions of 125 psi. The stresses resulting from the internal and external pressure loads were shown to be within code allowables and therefore meet the PFSF design criteria in Section 3.2.4 for internal and external pressures.

C. Thermal Loads

Thermal expansion induced mechanical stresses due to non-uniform temperature distribution are identified in HI-STORM SAR Section 3.4.4.2. It is determined that there is adequate space (gap) between the canister shell and basket, and canister shell and storage cask, that there will not be interference during conditions of thermally induced expansion or contraction. HI-STORM SAR Table 4.4.15 provides a summary of HI-STORM system component temperature inputs for the structural evaluation, consisting of temperature differences in the basket periphery and canister shell between the top and bottom portions of the HI-STORM PWR canister (MPC-24) and BWR canister (MPC-68). The temperature gradients were used to calculate resultant thermal stresses in the canister that were included in the load combination analysis. The stresses resulting from the temperature gradients were shown to be within code

allowables and therefore meet the PFSF design criteria in Section 3.2.6 for thermal loads.

D. Handling Loads

Handling loads for normal and off-normal conditions are addressed in HI-STORM SAR Sections 2.2.1.2, 2.2.3.1, and 3.1.2.1.1.2. The normal handling loads that were applied included vertical lifting and transfer of the HI-STORM storage cask with a loaded canister through all movements. The canister and storage cask were designed to withstand loads resulting from off-normal handling assumed to be the result of a vertical drop. The lifting heights were developed to limit the deceleration levels within design allowables and therefore meet the PFSF design criteria in Section 3.2.2 for handling live loads.

E. Cask Drop and Tipover

Cask drop and tipover loads are addressed in HI-STORM SAR Sections 3.1.2.1.1.1, 3.1.2.1.1.2, and 3.4.4.3.1.1 and Appendices 3A and 3B. Tipover of a loaded storage cask is a non-credible hypothetical accident, as discussed in Section 8.2.6 of this SAR. It is demonstrated that the HI-STORM storage casks are stable and will not tip over in the event of the PFSF design basis ground motion, nor in the event of tornado winds with concurrent impact of the tornado-driven design missile (an automobile) at the top of the storage cask.

Holtec analyzes a vertical end drop and a hypothetical tipover event in HI-STORM SAR Appendices 3A and 3B, establishing design basis vertical and horizontal deceleration values for the HI- STORM storage cask system of 45 g for the stored fuel. It is demonstrated in the HI-STORM SAR that deceleration levels at the top of the stored fuel from hypothetical cask tipover and 11 inch vertical end drop events are within the design basis, based on impact with a reference target ISFSI pad 36 inches thick, constructed of 4200 psi concrete (at 28 days), with reinforcing steel having a 60 ksi

yield strength, and grounded on a soil foundation with an effective Young's Modulus not exceeding 28,000 psi. The pad thickness at the PFSF is 36 inches thick, which meets the reference pad thickness criteria, and the soil foundation beginning 2 foot below the ISFSI pad concrete has an effective soil Young's Modulus not exceeding 28,000 psi. However, the first 2 feet (maximum) of foundation directly below the ISFSI pad concrete is a soil-cement mixture with an effective Young's Modulus of 75,000 psi (maximum). To ensure that the 45 g limit at the top of the fuel is met, site-specific tipover and vertical drop events were analyzed by Holtec (Reference 87) using the same methodology and computer codes used in the analyses discussed in the HI-STORM SAR.

Based on a conservative modeling of the site-specific properties of the PFSF pad and underlying foundation (soil cement and native soils), Holtec calculated that the maximum cask deceleration level, in the event of a vertical drop from 10 inches, is 45.15 g (Reference 87). Reducing the drop height to 6.5 inches, Holtec calculated a maximum deceleration of 36.15 g's. Interpolating between the decelerations associated with these drop heights, it is determined that the deceleration resulting from a 9 inch drop would be less than 45 g's. Since the design of the transporter limits the maximum height of the load to 9 inches, credible drops at the PFSF ISFSI pad will not result in deceleration levels that exceed the HI-STORM design basis.

Holtec also performed a site-specific tipover analysis using the analysis model from the HI-STORM SAR with appropriate modifications to reflect the maximum allowable stiffness of the soil-cement and to conservatively model the stiffness of underlying native soils existing at the PFSF (Reference 87). The analysis of the overpack steel structure incorporated elastic-plastic material behavior to permit energy absorption at the impact interface locations where local large deformations occur. The concrete for both the ISFSI pad and in the HI-STORM overpack was modeled using the same formulation used in the HI-STORM SAR tipover analysis, and the MPC model was identical to that used in the HI-STORM SAR analysis. The results from the site-specific non-mechanistic tipover analysis demonstrated that the maximum deceleration at the

top of the active fuel region is 43.82 g's, which is below the HI-STORM design basis value of 45 g's. Therefore, the HI-STORM 100 system deployed at PFSF meets the design basis requirements in the HI-STORM SAR for vertical end drop and non-mechanistic tipover.

In the PFSF site-specific analyses of storage cask tipover and drop events discussed above, Holtec assumed that the nominal 28 day compressive strength of the HI-STORM overpack concrete is 3,000 psi. This is lower than the 4,000 psi minimum concrete strength specified in the HI-STORM FSAR (Table 1.D.1), and also lower than the 4,200 psi cask concrete compressive strength assumed in the tipover and drop analyses documented in the HI-STORM FSAR. Two additional HI-STORM storage cask concrete compressive strengths were evaluated in the tipover simulations in Reference 87: 3,600 psi and 4,200 psi. For the hypothetical storage cask tipover event, the analyses determined maximum decelerations at the top of the active fuel region of 45.0g for the case with 3,600 psi cask concrete, and 45.9g for the case with 4,200 psi cask concrete. Holtec performed an evaluation of the effects of using 3,000 psi concrete in a HI-STORM storage cask (Reference 86) and determined that the only numerically significant use of concrete strength appears in the evaluation of the overpack resistance to the 8 inch diameter penetrant tornado missile. In Reference 86, Holtec states that the cask shielding effectiveness and thermal conductivity of concrete will not be affected by use of a reduced strength concrete, since the density of the concrete is inconsequentially affected by variations in the concrete strength (which is primarily a function of the water-cement ratio). Appendix 3.G in the HI-STORM FSAR details the tornado missile evaluation. Holtec performed a calculation for the 8 inch diameter penetrant tornado missile impacting the side of a HI-STORM storage cask assumed to have concrete with a 3,000 psi compressive strength, using the same methodology as HI-STORM FSAR Appendix 3.G. The calculation determined that a reduction in the compressive strength of the concrete will lead to a slightly larger depth of penetration than that identified in the HI-STORM FSAR. However, Holtec's

calculation (Reference 86) demonstrated that the HI-STORM storage cask with 3,000 psi concrete provides an effective containment barrier for the canister after being subjected to a side missile strike, since the side concrete will not be penetrated by the missile and there will be no damage to the canister.

In addition to the storage pad drop discussed above, Holtec analyzed a vertical end drop of a HI-STORM storage cask onto the Canister Transfer Building foundation mat (Reference 87). The mat is 5 ft thick reinforced concrete, except at the perimeter of the mat, where the 1.5 ft deep shear keys result in a total concrete thickness over the shear keys of 6.5 ft. The analysis conservatively assumed a uniform concrete thickness of 6.5 ft, with a mat concrete compressive strength of 4,200 psi. The compressive strength of the cask concrete was conservatively assumed to be 3,600 psi, consistent with the drop/tipover analysis onto a storage pad and greater than the minimum value of 3,000 psi used in that analysis. The model of the soil underlying the foundation mat was similar to that in the pad emplacement area, conservatively reflecting the stiffness of the native soils existing at the PFSF, except that there is no soil cement under the Canister Transfer Building. The analysis considered a single storage cask drop height, from 2 inches, and determined a maximum deceleration experienced by the fuel of 20.4 g (Reference 87). This deceleration is well below the design basis limit of 45 g and is therefore acceptable.

For the canister, the peak acceleration of 45 g established for the side and end drops is bounded by the 60 g deceleration calculated for drop accidents analyzed in Section 2.7.1 of the HI-STAR 10 CFR 71 Shipping SAR (Reference 3). Since the decelerations are bounding, the stresses (produced by 60 g vertical and horizontal decelerations) analyzed by the HI-STAR stress analyses and determined to be acceptable also bound stresses that would result from the HI-STORM tipover and end drop accidents.

For the storage cask, HI-STORM SAR Section 3.4.4.3.2.3 evaluates the buckling capacity of the cask based on a 45 g deceleration. No credit was taken for the structural stiffness of the radial concrete shielding. The minimum factor of safety for

material allowable stresses for all portions of the cask structure is 1.10. The tipover event evaluated in the HI-STORM SAR specifies that the cask lid must remain in place due to the 45 g horizontal acceleration. HI-STORM SAR Section 3.4.4.3.2.2 demonstrates that the minimum factor of safety for the cask lid and lid bolts is 1.29, which exceeds the minimum required 1.10 factor of safety.

F. Tornado Winds and Missiles

Tornado wind and tornado missile loads are addressed in HI-STORM SAR Sections 3.1.2.1.1.5, 3.4.8, and Appendix 3.G. The loads are based on a worst case design basis tornado in accordance with Regulatory Guide 1.76 (Reference 4) for Intensity Region I and postulated tornado-generated missiles in accordance with NUREG-0800 (Reference 5) for Spectrum I missiles. The site is located in Tornado Intensity Region III per Regulatory Guide 1.76, which has less severe tornado conditions than Region I. The postulated missile loads used in the HI-STORM analysis are the same as in the PFSF design criteria. Since the HI-STORM design tornado wind loads exceed the PFSF design criteria and tornado-generated missile loads bound the PFSF design criteria described in Section 3.2.8, the HI-STORM design meets PFSF design criteria.

The HI-STORM storage casks at the PFSF will have a minimum concrete compressive strength of 3,000 psi, as noted in the preceding discussion of cask drop and tipover events, which is lower than the 4,000 psi minimum concrete compressive strength specified in the HI-STORM SAR. Holtec evaluated potential effects of the reduced concrete strength on the storage cask structural analyses in Reference 86, and concluded the following: "In the HI-STORM 100 FSAR, the only numerically significant use of concrete strength appears in the evaluation of the overpack resistance to the 8" diameter penetrant tornado missile. Appendix 3.G in the HI-STORM 100 FSAR details the tornado missile evaluation. It is shown in that appendix that the outer steel shell is penetrated but the thick annular layer of concrete provided succeeds in limiting the depth of penetration. A reduction in the compressive strength of the overpack concrete will lead to a slightly larger depth of penetration. The attachment to this document

[Reference 86] contains the relevant portions of the FSAR appendix revised to use a concrete compressive strength of 3000 psi at 28 days. This value is bounding for greater concrete compressive strengths. A new penetration depth is computed but the conclusion is not altered. The MPC [multi-purpose canister] containing the spent nuclear fuel remains fully protected from a direct impact by the missile." Holtec's analysis of the depth of penetration of the 8" diameter penetrant tornado missile is attached to Reference 86, and is entitled "Revision of Relevant Sections of Appendix 3.G from HI-STORM 100 FSAR (HI-2002444, Rev. 0) to Reflect Use of a Reduced Overpack Concrete Strength of 3000 psi". Whereas a concrete penetration depth of 5.67" was calculated in the HI-STORM FSAR for the cask sidewall based on concrete with a compressive strength of 4,000 psi, for 3,000 psi concrete a penetration depth of 7.56" was calculated (Reference 86). This is much less than the 26.75" thickness of the concrete sidewall and therefore acceptable since damage to the canister is precluded. A similar analysis was performed assuming that the 8" diameter missile goes directly into an inlet vent and impacts the pedestal shield. It was concluded that, as in the case of the 4,000 psi concrete, the concrete penetration distance for the 3,000 psi concrete is less than the radius of the pedestal which is acceptable. Holtec concluded (Reference 86) "The above calculations demonstrate that the HI-STORM 100 Overpack provides an effective containment barrier for the MPC after being subjected to a side missile strike. No missile strike compromises the integrity of the boundary. The effect of lower concrete strength in the side of the overpack is to increase the depth of damage to the concrete; however, there is no release of radioactivity since the MPC is not penetrated. The results from this analysis demonstrate that the reduction in concrete strength from 4000 psi to 3000 psi at PFSF has no structural consequence."

THIS PAGE INTENTIONALLY LEFT BLANK

G. Flood

Flood loads are addressed in HI-STORM SAR Sections 3.1.2.1.1.3 and 3.4.6. The HI-STORM storage system is designed to withstand hydrostatic pressure (full submergence) up to a depth of 125 ft and horizontal loads due to water velocity up to 15 fps without tipping or sliding. The PFSF is above probable maximum flood conditions, therefore, the HI-STORM design meets the PFSF design criteria in Section 3.2.9 for flood design.

H. Earthquake

Earthquake loads are addressed in the HI-STORM SAR Sections 2.2.3.7 and 3.4.7. HI-STORM SAR Section 3.4.7 shows that the storage system will withstand the imposed loads and not rock when subjected to a generic seismic event. The analysis in the HI-STORM SAR conservatively evaluated the limiting seismic accelerations for the onset of sliding or tipping.

The cask vendor initially performed a site specific analysis and determined the HI-STORM storage casks will withstand the imposed loads and not tip over when subjected to the original PFSF deterministic design earthquake (0.67g horizontal, 0.69g vertical – See Section 8.2.1.1) (References 7 and 8). In addition, the vendor performed a site specific analysis for HI-STORM storage casks subjected to the design basis ground motion associated with the probabilistic seismic hazard analysis with the 2,000-yr return period (0.711g horizontal, 0.695g vertical), and determined maximum displacement of the cask of less than 4 inches (Reference 61). The analyses concluded that the casks do not tip over, collide, nor slide off the storage pad for these earthquakes. Soil-structure interaction was considered in the site specific analyses. The seismic cask stability analyses are fully described in Section 8.2.1.

Inertia loads produced by the seismic event are less than the 45 g loads for which the storage system is designed, in order to withstand the postulated HI-STORM non-mechanistic tip over and vertical drop events as discussed in Sections 11.2.8 and

3.4.10 of the HI-STORM SAR. Stresses in the canister due to the seismic event are bounded by those resulting from the 45 g canister design loading.

Even though the storage cask will not tip over during an earthquake, the cask is conservatively analyzed for a hypothetical cask tip over event in HI-STORM SAR Section 11.2.3. Both the cask and canister are shown to withstand this non-credible hypothetical event without loss of integrity.

Therefore, the HI-STORM storage system design meets the PFSF design criteria requirements in Section 3.2.10 for seismic design.

I. Explosion Overpressure

Explosion overpressure loads are addressed in HI-STORM SAR Section 11.2.11. Regulatory Guide 1.91 (Reference 9) requires a detailed review of the system for overpressures that exceed 1 psi. The HI-STORM storage system is analyzed and designed for accident external pressures up to 60 psig. As shown in Section 8.2.4, the PFSF is not subject to explosions that are in excess of 1 psig. Since the PFSF will not see explosion pressures that exceed 1 psig, the HI-STORM design meets the PFSF design criteria in Section 3.2.7 for explosion accident loads as required per 10 CFR 72.122(c).

J. Fire

Fire loads are addressed in HI-STORM SAR Section 11.2.4. The HI-STORM storage system was analyzed for a fire of 50 gallons of combustible fuel encircling the cask, resulting in temperatures up to 1,475° F and lasting for a period of 3.6 minutes. The analysis also evaluated the post fire temperatures of the system for a duration of 10 hours. The results of the analysis show that the intense heat from the fire only partially penetrated the concrete cask wall and that the majority of the concrete experienced

only minor temperature increases. The PFSF cask transporter will contain no more than 50 gallons of fuel, thus fire consequences will not exceed those of the HI-STORM analysis. As discussed in Section 8.2.5, a storage cask is postulated to be involved in a diesel fuel fire, involving up to 50 gallons of diesel fuel spilled from the fuel tank of the cask transporter, which is calculated to burn for 3.6 minutes. This fire would not damage the storage cask concrete, and would have a negligible effect on canister and fuel temperatures. Therefore, the HI-STORM design meets the PFSF design criteria in Section 3.2.6 for accident-level thermal loads as required per 10 CFR 72.122(c).

K. Lightning

Lightning is addressed in HI-STORM SAR Sections 2.2.3.11 and 11.2.12. The HI-STORM storage system was evaluated for the effects of lightning striking the storage cask. The evaluation determined that when hit with lightning, the lightning will discharge through the steel shell of the storage cask to the ground. The lightning current will discharge through the storage cask and will not affect the canister, which provides the confinement boundary for the spent fuel. Therefore, the HI-STORM design meets the PFSF design criteria in Section 3.2.12 for lightning protection as required in 10 CFR 72.122(b).

4.2.1.5.2 Thermal Design

Thermal performance for the HI-STORM storage system is addressed in HI-STORM SAR Chapter 4. The HI-STORM system is designed for long-term storage of spent fuel and safe thermal performance during onsite loading, unloading, and transfer operations. The HI-STORM system is also designed to minimize internal stresses from thermal expansion caused by axial and radial temperature gradients. The HI-STORM storage casks at the PFSF will have a minimum concrete compressive strength of 3,000 psi, as discussed in Section 8.2.6.2, which is lower than the 4,000 psi minimum concrete compressive strength specified in the HI-STORM SAR. Holtec evaluated

potential effects of the reduced concrete strength on the storage cask thermal analyses in Reference 86, and concluded the following: "The thermal conductivity of the concrete is also governed by concrete density. As the concrete density is not materially affected by the reduction in compressive strength, there is no effect on the thermal performance calculations and results reported in Chapter 4 of the HI-STORM 100 FSAR."

The HI-STORM system is designed to transfer decay heat from the spent fuel assemblies to the environment. The canister design, which includes the high structural

THIS PAGE INTENTIONALLY LEFT BLANK

integrity all-welded honeycomb basket structure, allows conductive heat transfer away from the canister internal region to the canister shell. The design incorporates top and bottom plenums, with interconnected downcomer paths, to accomplish convective heat transfer. The canister is pressurized with helium, which assists in conducting heat from fuel rods to the basket and from the basket to the canister shell. Gaps exist between the basket and the canister shell to permit unrestrained axial and radial thermal expansion of the basket without contacting the shell, minimizing internal stresses. The stainless steel basket conducts heat from the individual spaces for storing fuel assemblies out to the canister shell.

The HI-STORM storage cask design provides for an annular space between the canister shell and the inner steel liner of the storage cask for airflow up the annulus. Air enters the four inlet ducts at the bottom of the storage cask, flows upward through the annulus removing heat from the canister shell and inner cask liner by convection, and exits the four outlet ducts at the top of the cask.

The thermal analysis, discussed in HI-STORM SAR Chapter 4, was performed using the ANSYS and FLUENT computer codes. The thermal analysis considers the removal of decay heat from the stored spent fuel assemblies to the environment by the three modes of heat transfer: conduction, convection, and radiation. MPC internal convection heat transfer is conservatively neglected. The HI-STORM PWR canister (MPC-24) and BWR canister (MPC-68) were modeled to determine the temperature distribution under long term normal storage conditions, assuming the canisters are loaded with design basis PWR and BWR fuel assemblies. Decay heat generation rates, specified in HI-STORM SAR Table 2.1.6, are 0.870 kW for a design basis PWR fuel assembly (20.88 kW per MPC-24 canister) and 0.315 kW for a design basis BWR fuel assembly (21.52 kW per MPC-68 canister) with the minimum 5 year cooling time. Design basis decay heat generation rates for failed and stainless steel clad fuel assemblies are considerably lower, 0.115 kW for a failed BWR assembly (design basis failed fuel assembly), 0.710 kW for a stainless steel clad PWR assembly, and 0.095 kW for a stainless steel clad BWR assembly (HI-STORM SAR Tables 2.1.7 and 2.1.8). The analysis assumed HI- STORM storage casks are in an array, subjected to an 80° F

annual average ambient temperature, with solar radiation. The annual average temperature takes into account both day and night, summer and winter temperatures throughout the year. The annual average temperature is the principal design parameter in the storage system design analysis because it establishes the basis for demonstration of long-term spent nuclear fuel integrity. The long-term integrity of the spent fuel cladding is a function of the averaged ambient temperature over the entire storage period, which is assumed to be at the maximum average yearly temperature in every year of storage for conservatism in the cladding service life components. The results of this analysis are presented in Tables 4.4.9 and 4.4.10 of the HI-STORM SAR for MPC-24 and MPC-68 canisters, respectively. The results, summarized in Table 4.2-3 of this SAR, indicate that temperatures of all components are within normal condition temperature limits.

Holtec considered stainless steel clad fuels in the thermal analysis, as discussed in HI-STORM SAR Section 4.3.2. Stainless steel cladding is less conductive than zircaloy clad fuel and the net thermal resistance of a basket full of stainless steel clad fuel is greater, which would result in higher cladding temperatures for stainless steel fuel assemblies having the same decay heat generation rate as zircaloy clad fuel. However, the design basis decay heat for stainless steel clad fuel is significantly lower than that of zircaloy clad fuel, as noted previously, and the allowable temperature limit for stainless steel cladding is considerably higher than for zircaloy cladding. Holtec determined that the reduction in heat duty is much more pronounced than the nominal increase in the resistance to heat transfer, and concluded that the peak cladding temperature for stainless steel clad fuel will be bounded by the results for zircaloy clad fuel and a separate analysis for stainless steel clad fuel was not required.

HI-STORM SAR Section 11.1.2 evaluates temperatures of the HI-STORM storage system for a maximum off-normal daily average ambient temperature of 100° F, an increase of 20° F from the normal conditions of storage discussed above. This off-normal temperature condition is based on a 24 hour average solar load in accordance with 10 CFR 71, which represents extreme environmental conditions or off-normal conditions. The maximum off-normal temperatures were calculated by adding 20° F to

the maximum normal temperatures from the highest component temperature for MPC-24 and MPC-68. All the maximum off-normal temperatures are below the short term condition design basis temperatures (HI-STORM SAR Table 2.2.3). Therefore, all components are within allowable temperatures for the 100° F ambient temperature condition.

The thermal analysis in the HI-STORM SAR discussed above includes the following global assumptions: a) the concrete pad is assumed to be an insulated surface, i.e., no heat transfer to or from the pad is assumed to occur; b) adjacent casks are assumed to be sufficiently separated from each other (i.e., cask pitch is sufficiently large) so that their ventilation actions are autonomous from each other; c) the cask is assumed to be subject to full solar insolation on its top surface as well as view-factor adjusted solar insolation on its lateral surface. Second order effects such as insolation heating of the concrete pad, heating of feed air traveling downward between casks and entering the inlet ducts of the reference cask, and radiative heat transfer from adjacent spent fuel casks were not explicitly modeled in the HI-STORM SAR analysis.

In order to address these second order effects, PFS had the HI-STORM storage cask vendor, Holtec, perform a site-specific analysis (Reference 60). The site-specific analysis model conservatively minimized the radius of the cylindrical region assumed to surround the reference cask, setting it equal to the minimum prescribed tributary area used in the HI-STORM SAR for evaluating the off-normal and extreme hot ambient operating conditions. This conservatively increases the thermal effects of adjacent casks over those associated with adjacent casks at the PFSF, since the actual distance to neighboring casks will be greater than that assumed in the site-specific thermal

model. Since the influence of adjacent casks in the model is more conservative than would be the case for the actual cask spacing at the PFSF, use of a smaller cylindrical region is bounding and results in conservative temperature projections in the analysis.

The site-specific analysis applies to HI-STORM storage casks at the PFSF site and assumes the following: a) exposed areas of the storage pad and the storage casks are heated by the sun, with the intensity of radiation derived from 10 CFR 71.71(c); b) conductive heat transfer takes place between both the pad and the cask and the pad and the soil beneath it, assumed to be at 77°F; c) convective heat transfer takes place between both the pad and the ambient air and the cask and ambient air; and d) radiative heat exchange takes place between the pad and the cask and the pad and ambient air. In order to conservatively assess the heating effects of adjacent casks, the site-specific model assumes a reflecting and insulated hypothetical cylindrical boundary around the cask which reflects all heat radiated from the cask surface in the lateral direction back onto the cask. This heat reflection mirrors the heat produced by and radiated from adjacent casks (emitting design basis maximum heat) from all sides towards the cask being analyzed. The hypothetical boundary is insulated so that radiative cooling of the reference cask in the lateral direction is conservatively neglected. Further, the site-specific analysis includes heating of the cooler ambient air descending between casks by both the surface of the concrete cask itself and the concrete pad before the air enters the reference cask inlet ducts.

The site-specific analysis determined that the relatively cooler ambient air that descends downward between the concrete storage cask-to-hypothetical cylindrical tank annulus and sweeps across the hot, sunlight-exposed concrete surfaces of the cask and pad is heated by approximately 3°K (5.5°F) prior to entering the cask inlet ducts. Peak component temperatures of the HI-STORM 100 system were evaluated for steady state conditions with ambient air temperatures of 100°F and 125°F, and were determined to be below the applicable short-term temperature limits. This is a conservative approach, since it would take several days for cask and canister temperatures to equilibrate to steady state conditions, but day-night average temperatures would not be maintained at the high ambient air temperatures assumed.

This analysis shows that the secondary effects of heating the reference cask by adjacent casks and pre-heating the inlet air by cask and pad concrete surfaces are insignificant, with minimal impact on temperatures.

Holtec performed the above thermal analysis based on the minimum design spacing between the casks as allowed by the HI-STORM SAR for both its square and rectangular HI-STORM cask arrays. The PFSF uses a N x 2 rectangular cask array in which the spacing between casks is larger than the minimum design spacing specified by the HI-STORM SAR for a N x 2 rectangular array. Therefore, the Holtec thermal analysis, based on the minimum cask spacing allowed for the HI-STORM cask storage system, is applicable to and bounds the PFSF cask array.

Specifically, the PFSF casks are arranged for placement on a regular array of concrete pads (see Figure 1.2-1). The concrete pads are arranged to provide a lateral (edge to edge) spacing of 35 feet between adjacent pads. Each concrete pad is sized to accommodate a 2 x 4 array of casks with a 15 feet pitch in the width direction and a 16 ft pitch in the length direction. The resulting cask geometry is defined by three parameters: (i) cask pitch parameters (A and B) on a concrete pad, and (ii) lateral cask spacing parameter (C) between rows of pads in the east-west direction. For the PFSF cask array, the A, B and C parameters are 15 feet, 16 feet, and 50 feet (cask centerline to cask centerline), respectively.

The HI-STORM rectangular cask array geometry (shown in Figure 1.4.1 of the HI-STORM SAR), which served as the basis for the Reference 60 analysis, is defined by parameters p_1, p_2 and p_3. The p_1 and p_2 parameters (both equal) correspond to the PFSF cask parameters A and B, and p_3 corresponds to PFSF parameter C. The minimum p_1 and p_2 spacing specified in the SAR for the HI-STORM storage system is 13.5 ft. and the minimum p_3 spacing is 38 feet. Consequently, the PFSF cask spacing parameters are larger than the minimum HI-STORM cask design basis spacing parameters for which the thermal analysis was performed. Therefore, the site-specific thermal calculation based on the minimum design spacing identified in the HI-STORM

SAR bounds the PFSF cask array, and the temperatures calculated by the analysis are conservative for the PFSF cask array.

Additional site-specific modeling factors were analyzed in Reference 85 to investigate the effects of a larger reflecting cylinder radius surrounding the reference cask, to account for the prescribed PFSF cask spacing. This would conservatively admit a greater quantity of solar energy to the cask and pad surfaces than that assessed in Reference 60. In this study, the PFSF cask array tributary area was employed to compute the radius of a hypothetical cylinder having the same area. This underestimates the hydraulic diameter of the annulus for ambient air to travel downward to the inlet ducts, thus conservatively maximizing flow resistance. The calculation employed PFSF site conditions of cask array spacing and site ambient temperature data, and included pad and cask insolation heating in a most conservative manner. The calculation was performed using the same FLUENT computer code that was applied in the previous (Reference 60) analysis to determine the peak cladding temperature under normal operating conditions. The peak cladding temperature computed in the Reference 85 analysis was determined to be below the HI-STORM SAR long-term maximum allowable cladding temperature for normal conditions of operation, with a margin of greater than 10°F.

The HI-STORM storage system was also analyzed for a -40° F extreme low ambient temperature condition, as discussed in HI-STORM SAR Chapter 4. Holtec conservatively assumed zero decay heat generation from spent fuel, and no solar radiation, resulting in all storage system components reaching the -40° F temperature. As stated in the HI-STORM SAR, all HI-STORM materials of construction will satisfactorily perform their intended function in the storage mode at this minimum temperature condition.

The PFSF site low ambient temperature of -35° F, maximum annual average temperature of 51° F (normal), and average daily maximum temperature of 95° F (off-normal) are bounded by the corresponding temperatures used for the HI-STORM

storage system of -40° F, 80° F, and 100° F, respectively. Solar insolation values recommended in 10CFR71.71 have been included in the HI-STORM thermal analysis. The total insolation for a 12-hour period recommended by 10CFR71.71 is 800 g cal/cm^2 or 775 watts/m^2 over a 12-hour period. The maximum total solar insolation for a 12-hour period recorded during the onsite meteorological monitoring program at the PFSF is 706.5 g cal/cm^2 or 684.6 watts/m^2 over a 12-hour period. The solar insolation values used in the HI-STORM thermal analysis bound the PFSF site conditions. Therefore, as discussed above, the thermal design of the HI-STORM storage system bounds the site specific design requirements.

4.2.1.5.3 Shielding Design

Shielding design and performance for the HI-STORM storage system is addressed in HI-STORM SAR Chapter 5. The HI-STORM storage system is designed to maintain radiation exposure as low as is reasonably achievable (ALARA) in accordance with 10 CFR 72.126(a). The concrete storage cask is designed to limit the average external contact dose rates (gamma and neutron) to 40 mrem/hr on the sides, 10 mrem/hr on top, and 60 mrem/hr at the air inlets and outlets based on HI-STORM design basis fuel.

The storage cask is a massive structure designed to provide gamma and neutron shielding of the spent fuel assemblies stored within the canister. Radiation shielding is provided by the 2 inch thick steel inner liner and shield plate, the 26.75 inch thick concrete shell, and the 0.75 inch thick steel outer shell. Axial shielding at the top is provided by the steel canister lid and the storage cask lid. The storage cask lid consists of an approximately 10 inches of concrete sandwiched in a steel shell, with a 4 inch thick steel top plate (constructed as a simple integral 4 inch steel plate). The configuration of the inlet and outlet ducts prevents a direct radiation streaming path from the canister to outside the cask.

The design dose rates allow limited personnel access during canister closure operations. HI-STORM SAR Section 5.1.1 provides calculated dose rates on contact and at 1 meter for the top and side surfaces of the HI-STORM storage cask for design PWR and BWR fuel, which shows that the above design criteria are met by the HI-STORM storage system. Maximum dose rates on contact from a storage cask, calculated for design basis zircaloy clad fuels for normal conditions, are shown to be approximately 35 mrem/hr on the side, 5 mrem/hr on top, 9 mrem/hr at the top vents, and 15 mrem/hr at the bottom vents.

Section 3.3.5 presents the radiological requirements for the PFSF. The requirements originate from 10 CFR 72.104, which requires that the annual dose equivalent to any

real individual located beyond the OCA boundary not exceed 25 mrem to the whole body, and from 10 CFR 20.1301, which requires that the hourly dose to any member of the public in any unrestricted area not exceed 2 mrem as a result of exposure to radiation from the PFSF. As discussed in Chapter 7, the HI-STORM storage system shielding design achieves compliance with these requirements for the PFSF array, assumed to consist of 4,000 HI-STORM storage casks, configured as shown in the detail on Figure 1.2-1.

The HI-STORM storage casks at the PFSF will have a minimum concrete compressive strength of 3,000 psi, as noted in the preceding discussion of cask drop and tipover events, which is lower than the 4,000 psi minimum concrete compressive strength specified in the HI-STORM SAR. Holtec evaluated potential effects of the reduced concrete strength on the storage cask shielding analyses in Reference 86, and concluded the following: "The shielding effectiveness of concrete is governed by concrete density. Concrete compressive strength is controlled primarily by the water-cement ratio. The density of the concrete is inconsequentially affected by variations in the ratio of these two materials. Therefore, use of a lower strength concrete to promote energy absorption in the event of a tipover or a handling accident will not have any affect on the ability of the overpack concrete to perform its shielding function since the material density remains essentially the same."

4.2.1.5.4 Criticality Design

Criticality of the HI-STORM storage system is addressed in HI-STORM SAR Chapter 6. The HI-STORM storage system is designed to maintain the spent fuel subcritical in accordance with 10 CFR 72.124(a) and (b), with canister materials and geometry. The primary criteria for the prevention of criticality is that k_{eff} remain below 0.95 for all normal, off-normal, and accident conditions.

Criticality safety of the HI-STORM system depends on the following three principal design parameters:

- An administrative limit on the maximum average enrichment acceptable for storage in the canister,

- The inherent geometry of the fuel basket designs within the canister, including the flux-traps (water gaps for loading fuel into submerged canisters), where present, and

- The incorporation of permanent fixed neutron absorbing panels (Boral) in the fuel basket structure to assist in control of reactivity.

The criticality analysis performed for the HI-STORM system assumes only fresh fuel with no credit for burnup as a conservative bounding condition. In addition, no credit is taken for fuel related burnable neutron absorbers, and it is assumed that the Boron-10 content is only 75% of the manufacturer's minimum specified content. Other assumptions made to assure the results of the analysis are conservative are identified in Section 6.1 of the HI-STORM SAR. The HI-STORM system is dry (no moderator) and the reactivity is very low (k_{eff} <0.40). At the PFSF, the fuel will always be in a dry, inert gas environment, sealed within a welded canister, and no credible accident results in water entering the canister. However, the analysis was based on a flooded system during fuel loading operations, which is limiting from a criticality standpoint, and this moderated condition determines the design. The criticality analysis assume no credit for a boron concentration in the fuel pool water during fuel loading, and both the PWR and BWR canisters are designed to assure the k_{eff} meets the design criteria when a canister is filled with unborated water.

The results of the analyses of different fuel types are shown in HI-STORM SAR Tables 6.2.4 – 6.2.18 for MPC-24, and Tables 6.2.19 – 6.2.34 for MPC-68, with results summarized for the PWR and BWR design basis fuels in Tables 6.1.1 and 6.1.2, respectively. The results confirm that the maximum reactivities of the canisters are below the design criteria (k_{eff} <0.95) for fuels with specified maximum allowable

enrichments, considering calculational uncertainties. Based on these results, the maximum allowable enrichments are specified in HI-STORM SAR Table 2.1.3 for PWR fuels and Table 2.1.4 for BWR fuels.

Stainless steel clad PWR and BWR fuel assemblies were analyzed assuming 4.0 percent enrichment. The stainless steel clad fuel assemblies showed lower reactivity than zircaloy clad fuel assemblies at 4.0 percent enrichment, and storage of stainless steel clad fuel with enrichment equal to or less than 4.0 percent was determined to be acceptable.

Accident conditions have also been considered and no credible accidents have been identified that would result in exceeding the regulatory limit on reactivity. Holtec determined that the physical separation between overpacks due to the large diameter and cask pitch and the concrete and steel radiation shields are each adequate to preclude any significant neutronic coupling between storage systems.

HI-STORM SAR Section 6.4.4 discusses the results of criticality analyses on canisters storing damaged fuel in a Holtec failed fuel container. Analyses were performed for three possible scenarios, assuming 3.0 percent enrichment, though the maximum enrichment of the failed fuel allowed to be stored in the MPC-68 canister is 2.7 percent. The scenarios are:

1. Lost or missing fuel rods, calculated for various numbers of missing rods in order to determine the maximum reactivity.

2. Fuel assembly broken with the upper segments falling into the lower segment creating a close-packed array. For conservatism, the array was assumed to retain the same length as the original fuel assemblies.

3. Fuel pellets lost from the assembly and forming powdered fuel dispersed through a volume equivalent to the height of the original fuel, with the flow channel and cladding material assumed to disappear.

Results of the analyses confirm that, in all cases, the maximum reactivity of the HI-STORM design base failed fuel in the most adverse post-accident condition will remain well below the regulatory limit. Therefore, the HI-STORM storage system meets the PFSF design criteria in Section 3.3.4 for criticality safety. Since criticality control is ensured by the canister basket design, criticality monitoring addressed by 10 CFR 72.124(c) is not applicable for the PFSF. The HI-STORM system is designed such that the fixed neutron absorber (Boral) will remain effective for a storage period greater than 20 years, and there are no credible means to lose it. As discussed in Section 6.3 of the HI-STORM SAR, the reduction in Boron-10 concentration due to neutron absorption from storage of design basis fuel in a HI-STORM cask over a 50 year period is shown to be negligible. Analysis in Appendix 3.M.1 of the HI-STORM SAR demonstrates that the sheathing, which affixes the Boral panel, remains in place during all credible accident conditions, and thus the Boral panel remains permanently fixed. Therefore, there is no need to provide a surveillance or monitoring program to verify the continued efficacy of the neutron absorber.

THIS PAGE INTENTIONALLY LEFT BLANK

4.2.1.5.5 Confinement Design

Confinement design for the HI-STORM storage system is addressed in HI-STORM SAR Chapter 7. The confinement vessel of the HI-STORM storage system is the canister, which provides confinement of all radionuclides under normal, off-normal, and accident conditions in accordance with 10 CFR 72.122(h). The canister consists of the canister shell, a bottom base plate, the canister lid, and the canister closure ring, which form a totally welded vessel for the storage of spent fuel assemblies. The canister requires no valves, gaskets, or mechanical seals for confinement. All components of the confinement system are classified as Important to Safety.

The canister is a totally seal-welded pressure vessel designed to meet the stress criteria of ASME BPVC Section III (Reference 11), Subsection NB. No bolts or fasteners are used for closure. All closure welds are examined using the liquid penetrant method and helium leak tested to ensure their integrity. Two penetrations are provided in the canister lid for draining, vacuum drying, and backfilling during loading operations. Following loading operations, vent and drain port cover plates are welded to the canister lid. A closure ring, which covers the penetration cover plates and welds is welded to the canister lid providing redundant closure of the canister vessel. The loading and welding operations are performed at the originating power plant, ensuring total confinement of the canister upon arrival to the PFSF. There are no confinement boundary penetrations required for canister monitoring or maintenance during storage.

The confinement features of the HI-STORM storage system meet the PFSF design criteria in Section 3.3.2 for confinement barriers and systems.

4.2.2 (deleted)

4.2.3 Cask Storage Pads

The design criteria for the cask storage pads are described in Chapter 3. The analysis methods and resulting design of the pads are described below.

4.2.3.1 Design Specifications

The design of the cask storage pads is in accordance with ANSI/ANS-57.9 (Reference 14) and ACI 349 (Reference 15) as identified in Chapter 3.

The cask storage pads are independent structural units constructed of reinforced concrete. Each pad is 30 ft wide by 67 ft long and 3 ft thick. The size of the pad is based on a centerline-to-centerline spacing for the storage casks of 16 ft in the pad length direction (north-south), and 15 feet in the pad width direction (east-west). The distances from the center of the casks to the edge of the pad are 7.5 ft in the short direction of the pad and 9.5 ft in the long direction. The pads are flush with grade for direct access by the cask transporter. Each cask storage pad is capable of supporting 8 loaded storage casks.

An independent modular pad design was chosen to simplify the number of cask placement combinations and to minimize the effects of thermal expansion. The modular pad design also provides for ease of construction by limiting the number of concrete pad construction and/or expansion joints required and allows for staged construction of the facility.

The cask storage pad design is based on a maximum loaded storage cask weight of 360,000 lbs. This maximum weight envelopes the maximum loaded weight of the storage casks proposed for use at the PFSF.

The HI-STORM storage casks proposed for use at the PFSF are the MPC-24 (PWR fuel) and the MPC-68 (BWR fuel) with maximum weights of 348,321 lb. and 355,575 lb., respectively, as shown in the HI-STORM SAR Table 3.2-1.

The cask storage pad design also considers the weight of the loaded storage casks in combination with the seismic loads due to the site-specific probabilistic seismic hazard assessment (PSHA) design basis earthquake (0.711g horizontal in two directions and 0.695g vertical – See Section 8.2.1.1).

4.2.3.2 Plans and Sections

The site plan, which shows the locations of the concrete storage pads, is shown in Figure 1.2-1. A typical concrete storage pad plan, cross section, and details are shown in Figure 4.2-7.

4.2.3.3 Function

The function of the cask storage pads is to provide a level and stable surface for placement and storage of the storage casks containing the spent fuel canisters.

4.2.3.4 Components

The components of the cask storage pads consist of the materials of construction, which include concrete with a minimum 28-day compressive strength of 3,000 psi and reinforcing steel with a minimum yield strength of 60,000 psi.

4.2.3.5 Design Bases and Safety Assurance

The design bases for the cask storage pads are identified in Chapter 3.

The cask storage pads are classified as being Important to Safety in order to provide the appropriate level of quality assurance in the design and construction. This provides for the safety assurance that the cask storage pads will perform their intended function.

4.2.3.5.1 Storage Pad Analysis

The reinforced concrete pads were analyzed and designed in accordance with nuclear industry standard structural analysis and design methods (Reference 16). The static and dynamic analyses for evaluating the concrete pad response displacements and internal stresses have used standard finite element analysis computer programs CECSAP (Reference 17) and SASSI (Reference 18) computer codes.

Static analyses have been performed for the dead load and design live (storage cask) loads using the CECSAP computer program. Dynamic analyses have been performed for the site-specific probabilistic seismic hazard assessment (PSHA) design basis ground motion using the CECSAP computer program. In addition, a separate dynamic analysis was performed using the SASSI computer program to more rigorously account for the effect of soil-structure interaction. These static and dynamic analyses confirm the structural adequacy of the reinforced concrete storage pad for supporting the storage casks when subjected to the design loading conditions. The results of the pad dynamic analysis using SASSI confirmed validity and indicated conservatism of the corresponding results using CECSAP.

The structural analyses of the pad used a three-dimensional flat-shell finite element model for the concrete pad. The finite element model mesh developed for the pad is shown in Figure 4.2-8. A total of 264 flat-shell finite elements have been used to model the concrete pad. Gross uncracked stiffnesses have been used for the model. The finite element mesh was developed with the consideration that it would produce reasonably refined distribution of internal forces and moments. Also, the nodal points of the mesh coincided with the locations of the static and dynamic loadings associated with one to eight casks to be applied on the pad. These loadings are lumped to four points on the outer circular perimeter of each cask corresponding to the four quadrants of the cask. Various cask loading patterns were considered to determine the maximum pad internal stresses.

To represent the soil support condition of the pads for the long-term static (i.e. dead and live) load conditions, vertical boundary soil springs tributary to each node of the pad finite element model were used in the CECSAP static finite element model. The spring stiffness values for the static loading cases were developed from the modulus of subgrade reaction of the supporting soil medium (Reference 71). The spring stiffness values were varied to account for uncertainties in the soil properties by using lower and upper bound conditions (Reference 40). For the short-term PSHA design basis earthquake loading condition, three-component (two horizontal and one vertical) boundary soil springs and dashpots representing the dynamic soil stiffnesses and radial damping characteristics of the supporting soil medium were used to connect to each node of the pad model. The soil spring stiffness (and its associated soil mass), and radial damping coefficient tributary to each node were derived from the lumped soil spring stiffness, mass, and damping coefficient values based on the procedure in ASCE-4 (Reference 20). For the dynamic analysis using the SASSI computer program, the soil support to the pad was represented by three-component (two horizontal and one vertical) complex-valued, frequency-dependent, dynamic soil impedance functions that are connected to each node of the pad finite element model. The soil impedance functions

were computed numerically within the SASSI computer program based on the free-field profile and dynamic properties of the soil layers underlying the pad.

The pad structural analyses included both static and dynamic analyses. The static analysis evaluated the pad response stresses due to the dead and (cask) live loads. The dynamic analysis evaluated the pad response due to the PSHA design basis earthquake loadings. The pad responses obtained from these analyses were then combined to give the combined maximum response values in accordance with the applicable load combinations. The combined response values were used for checking the structural adequacy of the concrete pad and the dynamic soil bearing capacity and overturning and sliding stability. The static and dynamic pad analyses performed for the pad are separately described below.

A. Static Analysis

The static pad analysis, using the CECSAP finite element model of the pad shown in Figure 4.2-8, was conducted for the dead load equal to the gravitational dead weight of the pad and the live load of the casks. The static loading cases were performed under a bounding range of soil spring values (stiffness) to account for potential uncertainties in the soil properties used in the analyses. Each load case was evaluated for lower and upper bound soil values using the soil property provided in Reference 40 and 71.

The live loads from three loading patterns of 2, 4, and 8 fully-loaded casks were considered. The weight of one fully-loaded cask considered was 360 kips. To simulate the condition of one fully-loaded cask being transported onto the pad, one additional cask loading pattern consisting of 7 fully-loaded casks and one fully-loaded cask being lifted by a cask transporter on the pad having a weight of 145 kips (Reference 21) was also considered. For conservatism, a dynamic impact (or amplification) factor equal to 2.0 was used for the load of one fully-loaded cask plus one-half of the transporter being on the pad to account for any dynamic effect that may arise while transporting the cask.

Based on the results of this analysis, the cask-loading pattern that produces the highest pad internal stresses is that of two casks on the pad and the worst-case loading that produces the largest soil bearing pressure is that of 7 casks plus one cask being carried by the transporter. The maximum response results obtained from the static analyses are summarized in Table 4.2-7.

Soil pressures beneath the storage pad were also verified to be within the acceptance criteria for static loading conditions. Actual soil bearing pressures were calculated beneath the pad and compared to the allowable soil bearing pressures identified in Section 2.6.1.12.1 for various static load combinations. The maximum static soil pressure was calculated to be 3.6 ksf under the static (dead plus live [snow plus 7 casks plus the loaded transporter]) loading condition. The maximum calculated static soil pressure is less than the minimum allowable soil bearing pressure for static loads (4.36 ksf, as shown in Table 2.6-6).

B. Dynamic Analysis

The dynamic analysis was performed to determine the pad response stresses under the PSHA design basis earthquake loading. The dynamic loading cases were analyzed for a bounding range of soil spring values (stiffness) to account for potential uncertainties in the soil properties used in the analyses. Each load case was evaluated for lower bound, best estimate, and upper bound soil values using the data and soil properties provided in References 40 and 71.

The global seismic time-history response analysis was performed utilizing a series of cask-pad-soil interaction models to represent the dynamic characteristics of one to eight

casks supported on the pad, which is supported on the site soil. To account for uncertainties in the frictional resistance to horizontal movements of casks on the pad, the friction coefficient between the cask base and the concrete pad considered in these analyses was varied from a lower-bound value of 0.2 to an upper-bound value of 0.8. The case with the lower-bound friction results in an upper-bound estimate of the sliding displacements of the casks on the pad and a lower-bound estimate of the cask dynamic forces acting on the pad, whereas the upper-bound friction case results in a lower-bound estimate of the sliding displacements and an upper-bound estimate of the cask dynamic forces acting on the pad. Thus, for the purpose of determining the upper-bound seismic stresses in the pad, the cask dynamic force time histories resulting from the upper-bound friction case were conservatively used as the dynamic forcing function inputs to the pad.

The cask/pad interface dynamic forcing function inputs were obtained from Holtec, based on the site-specific cask stability analysis for the HI-STORM storage cask (Reference 61). These dynamic forcing time histories were evaluated for each cask at four points that are equally-spaced along the circular outer perimeter of the cask base. At each point, a set of three-component (two horizontal and one vertical) dynamic forcing time histories was evaluated, which represents the lumped dynamic reaction forces of the pad to the cask within the four quadrants of each circular cask-base area.

In evaluating the pad dynamic stresses due to the dynamic forces of the casks acting on the pad, the finite element model of the pad-soil system (using CECSAP) was used and the dynamic force time histories of the casks were applied on the pad as nodal forcing functions. To reasonably bound the various cask loading patterns, the same 2, 4, and 8-cask loading configurations that were considered in the static analyses were analyzed. The maximum values of the pad response shear forces and bending moments resulting from the analysis were then evaluated and used for checking the structural adequacy of the pad design. The maximum values of the three-component (two horizontal and one vertical) soil-spring reaction forces were also evaluated and used for checking the

overturning stability, the soil bearing capacity, and the sliding stability of the pad for the dynamic loads due to the design basis ground motion. Refer to Section 2.6.1.12.1 for a discussion of these analyses.

To provide a comparison and an assessment of the accuracy and conservatism of the dynamic analysis results from the CECSAP pad-soil system model, an additional dynamic analysis was also performed for a selected dynamic loading case using the SASSI computer program. The dynamic response results obtained from this SASSI finite element analysis were compared with the corresponding results obtained from the CECSAP analysis. This comparison indicates that the CECSAP analysis results are conservative relative to the corresponding SASSI results by a margin of greater than 20 percent.

The results of the maximum dynamic response values obtained from the dynamic analyses described above are summarized in Table 4.2-8. Based on these results, the loading that produces the maximum dynamic pad internal stresses and soil pressures is that of two casks, and the loading that produces the largest seismic horizontal soil reaction forces is that of 8 casks. These values were included in the analyses of dynamic bearing capacity and sliding stability of the pad, which are discussed in Section 2.6.1.12.1.

The maximum dynamic soil pressures, which include earthquake loadings, were also calculated for the pad dead load plus 2 casks, 4 casks, and 8 casks. The resulting soil pressure distribution was converted to an average soil pressure over an effective pad width and compared to the allowable dynamic soil pressures. The maximum soil pressure under dynamic (dead plus live plus the PSHA design basis earthquake) loading condition is 7.35 ksf, which gives a minimum factor of safety of 1.78 when compared with the minimum ultimate bearing pressure of 13.1 ksf calculated for vertical loading under undrained conditions (as shown in Table 2.6-6).

The sliding stability of the cask storage pads was also analyzed using the dynamic forces applicable for the PSHA design basis earthquake and found to be adequate. Refer to Section 2.6.1.12.1 for details and results of these analyses.

4.2.3.5.2 Storage Pad Design

The storage pad design is a 3-ft thick reinforced concrete slab with #11 longitudinal and transverse horizontal reinforcing bars spaced at 12 inches on center each way at the top face and #11 longitudinal and transverse horizontal reinforcing bars spaced at 12 inches on center each way at the bottom face of the pad. The top and bottom face horizontal reinforcements are tied through the thickness of the pad by #7 vertical shear reinforcing bars spaced at 12 inches on center each way in two ways uniformly distributed over the entire pad. The concrete has a minimum 28-day compressive strength of 3,000 psi and the reinforcing steel has a minimum yield strength of 60,000 psi.

Static design moments are based on the 1.4D + 1.7L + 1.7H load combination. The design provides an ultimate static moment capacity in the longitudinal pad direction of $-M_{yy}$ = 210 k-ft/ft and $+M_{yy}$ = 218 k-ft/ft. The capacities exceed the demand moments of $-M_{yy}$ = 109 k-ft/ft and $+M_{yy}$ = 138 k-ft/ft. The moment capacity to demand ratios in the transverse pad direction is higher than that for the longitudinal direction.

Static design shear values are also based on the 1.4D + 1.7L + 1.7H load combination. The design provides an ultimate static beam shear capacity of 110 k/ft and an ultimate static punching shear capacity of 110 k/ft. The capacities exceed the static demand shears of V_u (beam) = 19 k/ft and V_u (punching) = 9 k/ft.

Dynamic (or accident-level) design moments are based on the D + L + H + E load combination. The design provides an ultimate dynamic (impulse or impactive) moment capacity in the longitudinal pad direction of $-M_{yy}$ = 232 k-ft/ft and $+M_{yy}$ = 242 k-ft/ft. The

capacities exceed the demand moments of $-M_{yy}$ = 203 k-ft/ft and $+M_{yy}$ = 113 k-ft/ft. The design also provides a moment capacity in the transverse pad direction of $-M_{xx}$ = 225 k-ft/ft and $+M_{xx}$ = 237 k-ft/ft. These exceed the demand moments of $-M_{xx}$ = 218 k-ft/ft and $+M_{xx}$ = 133 k-ft/ft.

Dynamic (or accident-level) design shear values are also based on the D + L + H + E load combination. The design provides an ultimate dynamic beam shear capacity of 121 k/ft and an ultimate dynamic punching shear capacity of 121 k/ft. The capacities exceed the demand shears of V_u (beam) = 58 k/ft and V_u (punching) = 98 k/ft.

Therefore, the storage pad as designed provides adequate strength for accommodating the design loading conditions.

4.2.3.5.3 Storage Pad Settlement

The relationship of major foundations to subsurface materials is contained in Section 2.6.1.6. Storage pad soil settlement analyses are described in Section 2.6.1.12.1.

The in situ soil is suitable for supporting the cask storage pads, but settlements are expected to occur. Analyses were performed to calculate the estimated settlement of the storage pads from the weight of the pad with 8 fully loaded casks in place (Section 2.6.1.12.1). The nominal soil bearing pressure for this case is approximately 1.9 ksf, and the total estimated settlement of the pad is approximately 1-3/4 inch. The maximum differential settlement between the edge of the storage pads and the center of the aisle of crushed rock between columns of storage pads is 3/4 inch (References 89 and 90).

The crushed rock surface materials will be installed flush with the top of the storage pads and removed as required in order to accommodate the total estimated settlement. Exposed edges of the pad will be chamfered, and the crushed rock surface materials will be feathered to meet the edges of the pads for transporter access.

Uniform downward settlement has no adverse effect on either the pad or the casks, it only lowers the final elevation of the storage pad. The temporary uniform differential settlement of the pad from partial cask placements causes no loss of structural integrity to the pad. The storage pad is not susceptible to subsurface failures associated with liquefaction since the site is not subject to liquefaction, as discussed in Section 2.6.4.8.

4.2.3.5.4 Cask Stability

Cask stability ensures the storage casks will not tip over or slide excessively during a seismic event. The generic cask stability analyses in the HI-STORM SAR does not consider soil-structure interaction, which can amplify seismic accelerations. Consequently, site-specific cask stability analyses, performed by Holtec (Reference 61) demonstrate the storage casks will not tip over or slide excessively during the PFSF design basis ground motion. The cask stability analyses are described in detail in Section 8.2.1. The cask storage pad is designed for the loads generated from the site-specific cask stability analyses and will provide the required support for the storage casks.

THIS PAGE INTENTIONALLY LEFT BLANK

4.3 AUXILIARY SYSTEMS

4.3.1 Ventilation and Offgas Systems

The canister-based storage technologies use a sealed (welded) canister design that precludes the need for ventilation or off-gas systems. No canisters will be opened at the site, therefore no ventilation system is required.

4.3.2 Electrical Systems

4.3.2.1 Major Components and Operating Characteristics

Normal electrical power will be provided to the PFSF via an upgraded 12.5 kV offsite distribution power line, which runs parallel to Skull Valley Road. A new electrical line will be constructed parallel to the site access road to furnish 12.5 kV to a 480 volt site transformer located at the site. The line will be run on new wooden power poles that will be installed by Utah Power & Light. Electrical power onsite downstream of the utility meter will be run underground and installed by contractors. The lines will either be underground service cable laid and buried in trenches or run in plastic conduit that is installed in underground concrete ductbanks per the National Electric Code (NEC) (Reference 67).

Step down transformers will be used to provide 480 and 120/240 volt services as required. Transformer selection will be based on EPA containment regulations in force at the time of construction. No switching stations will be necessary. The normal power will be provided for lighting, general utilities, security system, HVAC loads, crane loads, and miscellaneous equipment. Cable size and power loading will be determined by the requirements in the NEC.

Emergency backup power is provided at the PFSF by a 480 volt diesel-generator. The emergency power supply is limited to the security system, emergency lighting loads, storage cask temperature monitoring system, and the site communications system. The diesel generator fuel supply is sized to provide continuous operation for a minimum 24 hour period per IEEE 692 (Reference 68). The diesel generator is located in the Security and Health Physics Building. A battery charger is provided with automatic and manual charge control to maintain fully charged diesel generator starting batteries when the unit is stopped.

An Uninterruptible Power Source (UPS) is utilized to support the security loads until the diesel starts and comes up to speed. The UPS system is a 120 volt, single phase system with integral batteries and battery charger. The UPS system is designed for a minimum of 1 hour operation without replacing or recharging batteries per IEEE 692. The UPS system is located in the Security and Health Physics Building.

4.3.2.2 Safety Considerations and Controls

In the event of a loss of offsite power, the UPS system is designed to automatically switch over to the battery source without loss of output voltage. When the diesel generator comes up to speed, the UPS automatically switches back to its normal source (which is then from the diesel generator) without loss of output voltage or battery recharge.

The diesel generator is provided with starting batteries maintained to supply sufficient capacity to consecutively crank the engine a minimum of five times. When the diesel generator starts, an automatic transfer switch transfers the security, emergency, and temperature monitoring loads to the generator when the diesel comes up to speed. Transfer back to normal offsite power takes place after the normal power is restored for a minimum of 30 minutes.

Electrical power is not classified as Important to Safety since the storage systems do not require electrical power for operation. In addition the cranes and operating equipment have been designed to maintain adequate safety provisions for handling spent fuel canisters in the event of a loss of power as discussed in Section 8.1.1.

In the event of a lightning strike, the most probable target is the 130 foot tall light poles that provide the lighting for the storage area. The light poles are metal and therefore act as a conductor. The poles are grounded to ensure that the current from a lightning strike is properly conducted to ground per the NEC.

4.3.2.3 Restricted Area Lighting

The lighting system will be designed to maintain a minimum lighting distribution of 0.2 foot-candles per 10 CFR 73.50 (Reference 69) throughout the Restricted Area (RA) such that sufficient lighting is provided to meet the following design objectives:

- Security of the site
- Safety of personnel and canisters
- CCTV to distinguish shapes, objects, and movement
- Human eye observation
- Lighting coverage of entire site per 10 CFR 73.51 requirements
- Minimize shadows around the casks
- Lighting of perimeter, double security fences, and the area immediately outside of this fence. These areas are the most critical for CCTV observation.

Note: Poles for site lighting cannot be located in close proximity to security fences thus eliminating a means to breach the security of the site. This results in the lighting for the perimeter, double security fences and the area immediately outside of this fence being more visible since they are aimed out to and past the Restricted

Area perimeter fence. This is minimized as much as possible during final, fine-tuning of the lighting installation.

The facility lighting system will consist of 130' mast lighting with 1000W HPS symmetrical patterned fixtures. These fixtures were chosen for efficiency and economy (they provide the greatest light distribution with the least number of fixtures).

Additional perimeter fence lighting is provided by 1000W HPS floodlights (with asymmetrical patterns) mounted at 130' for the fixtures..

In three locations outside the RA along site roadways to the adminsitartion building and propoane tank areas, 40' poles with a single luminare will be placed to provide lighting for roadway and parking facilities. These are 400W HPS fixtures and are aimed low in an effort to eliminate, horizontal glare (brightness) from the fixture.

4.3.3 Air Supply Systems

An air supply system is provided at the PFSF in the Canister Transfer Building and Operation and Maintenance Building for maintenance purposes. The system will be designed and installed in accordance with ASME B31.1 (Reference 70). There are no SSCs classified as being Important to Safety that require compressed air for operation.

4.3.4 Steam Supply and Distribution System

A steam supply system is not provided at the PFSF. There are no SSCs classified as being Important to Safety that require steam for operation.

4.3.5 Water Supply System

A water supply system is provided at the PFSF for normal facility services and operation and maintenance functions. Water will be supplied using surface storage tanks fed from one or more wells drilled on-site. In the event that onsite water quantity or quality are inadequate, potable water will be obtained directly from the Reservation's existing supply or an additional well or wells will be drilled east of the site and outside of the OCA, where water supplies are likely to be more satisfactory. The water distribution piping and plumbing within the buildings will be provided in accordance with the Uniform Plumbing Code (Reference 25). There are no safety related SSCs classified as being Important to Safety that require water for operation.

4.3.6 Sewage Treatment System

A sanitary drainage system will be provided at the PFSF in accordance with the Uniform Plumbing Code (Reference 25) to transmit waste from the buildings to a septic system. The drainage lines will be installed underground and sloped to facilitate drainage.

Septic tank and drain field systems will be provided to collect and process sanitary waste water from the facility. The systems will be located near the Security and Health Physics Building for the storage facility and near the Administration Building for the Balance of Facility. The systems will be sized for the maximum number of personnel expected on site during normal operating periods. The septic system is expected to process less than 5,000 gallons per day.

4.3.7 Communications and Alarm Systems

The communication systems consist of normal telephone service in all the buildings, a site public address system, and a short-wave radio system for security. The main

telephone panel will be located in the administration building and will provide for 25 telephone lines. The service will be provided from the existing underground service located along the Skull Valley Road and will be routed underground parallel to the site access road. The telephone service will be used to provide normal communication to and from the site, emergency communications with local authorities, and on-site voice paging. The communication systems provide a means to contact the local law enforcement authorities for security purposes and for emergency responses on site in the event of an "ALERT", with notifications and follow-up communications.

In the event of an emergency, facility personnel and visitors on site are notified by an announcement over the onsite communications system (intercom). Offsite emergency response personnel are notified by means of personal pagers and/or using the notification list of telephone numbers located in the Emergency Plan implementing procedures. Alarms at the PFSF are only used on area radiation monitors to notify nearby personnel of doses that exceed the alarm setpoint.

Portable two-way radios are used by security personnel to maintain continuous communications with the Security and Health Physics Building while on patrol. The communication system is in accordance with proposed rule 10 CFR 73.51 (Reference 23).

4.3.8 Fire Protection System

4.3.8.1 Design Basis

Fires that could affect SSCs classified as Important to Safety are postulated to result from diesel fuel sources originating from the cask transporter or shipping cask transport vehicles (heavy haul tractor/trailer or railroad locomotive). SSCs affected include the storage casks in the yard and the shipping and storage system components and cranes

in the Canister Transfer Building. Scenarios for a fire in both locations considering fire location, intensity, and duration have been analyzed in Section 8.2.5. The analysis determined that the fires will not compromise the safety provisions of the SSCs.
No other major fire fuel sources are located in areas near SSCs classified as Important to Safety.

Canister Transfer Building

The Canister Transfer Building will be designed with fire protection systems in areas of the building where it is in the best overall interest of fire, life, and nuclear safety. Therefore, since the CTB is a facility where nuclear materials are handled, the CTB fire protection systems will be designed in accordance with NFPA 801 (Reference 72). However, in certain cases where the Uniform Building Code (UBC) (Reference 25) has more stringent requirements, the CTB will be designed to envelope these requirements so that any fire insurance requirements will also be met.

Fire zone classifications of the building are established in accordance with the NFPA 101 (Reference 66) as referenced by NFPA-801 and are shown on Figure 4.3-1. The Canister Transfer Building is classified with multiple purpose occupancy and is divided into 5 fire zones, which correspond to the specific occupant classifications.

Fire Zone 1 is classified as a Special Purpose Industrial Occupancy in accordance with NFPA-101. This zone consists of the transfer cells, crane bay, cask load/unload bay, and the cask transporter bay. The transfer cells and crane bay do not have any ignition sources however, the cask load/unload bay and cask transport bay house equipment containing diesel fuel from the heavy haul tractor/trailer and the cask transporter respectively. The diesel fuel is a Class II combustible load. The cask transporter bay will contain up to 50 gallons of diesel fuel in the cask transporter. The cask load/unload bay will contain up to 300 gallons of diesel fuel in the heavy haul tractor/trailer.

In addition, the cask load/unload bay floor is sloped to one of two sumps located between each bay and a 1 inch high threshold at the entrance into the transfer cell / crane bay area will be utilized to retain any spilled diesel fuel.

The load/unload bays of the Canister Transfer Building will utilize a foam-water sprinkler system for fire protection in accordance with NFPA 16 (Reference 65). The total floor area of the cask load/unload bays is 200 ft. by 50 ft. for a total of 10,000 sq. ft. NFPA-16, allows a maximum of 5000 sq. ft. per zone. Therefore, the bays will require at least 2 foam- water sprinkler zones. Three (zones were selected as the low bay section of the east half of both bays, the low bay section of the west half of both bays, and the high bay section in the center of the building. The two low bay zones have an area of 3500 sq. ft. each and the high bay zone has an area of 3250 sq. ft. One sump will be located in the center of each low bay zone centered along Column 9. The floor of each zone will be sloped 0.25 in./ft. toward one of the two sumps. Each sump will be 60 ft long, the west sump located between Columns A and C and the east sump located between Columns E and G. The floor of each sump near the center of the building will be sloped 0.25 in./ft. toward the ends of the bays, away from where a shipping cask and the crane lifting cables are located.

NFPA 16 requires that the design discharge density of water be no less than 0.16 gal/min./sq. ft. Assuming the total volume of free water is maintained at 0.16 gal/min./sq. ft. and is not lost by the production of foam and adding the 300 gallons of diesel fuel spill, the maximum volume assuming a discharge for 30 minutes in accordance with NFPA 801 is:

Vol. = (0.16 gpm/sq. ft. x 30 min. x 5000 sq. ft. + 300 gal diesel) / 7.48 gal/cu. ft.
Vol. = 3,250 cu. ft.

(Note: Typically these calculations include water from the discharge from hose streams.

However, NFPA 801, 3-10.2.1(c) excludes this requirement where an automatic fire suppression system is provided throughout. In addition, it is reasonably anticipated that the Fire Hazards Analysis (FHA) will determine that the water discharged by the foam-water system (24,000 gal) is abundantly more than necessary to extinguish a fire from a mere 300 gallons of diesel fuel).

If the floors of the bay are sloped 0.25 in. per ft. toward the sumps, then the depth of the floor at Column line 9 will be (assume a 3 ft. dry egress perimeter around the bays):

Pooling depth = (25 ft. – 3 ft.) x 0.25 in. / ft. = 5.5 in.

Then the total volume of fluid that the floor will hold is:

Floor capacity = (50 ft. – 6 ft.) x 5.5/12 ft. x (100 ft. – 6 ft.) / 2 = 948 cu. ft.

Therefore, the sumps must be designed to hold a minimum volume of:

Min. Sump capacity = 3,250 – 948 = 2302 cu. ft.

Actual sump volume = approximately 3450 cu. Ft. which is greater than 2302 cu. Ft. therefore the sump value is more than necessary.

The threshold between the load/unload bay and the crane bay will be designed at a maximum height of 1 inch, which will provide ample protection (along with the 3 ft. dry egress path) against fluids crossing the threshold. The threshold will not rise abruptly like a curb. It will gradually raise to 1 inch and lower flush to the floor over a 2 ft. wide area so as not to be a personnel tripping hazard.

Another provision to ensure a safe environment for SSCs will be to design the walls and sliding doors between the canister transfer cells and the cask transporter bay as fire rated. The transfer cells walls and doors as identified on Figure 4.3-1 will have fire resistance to comply with NFPA-801to prevent any fire that could occur in the transporter bay from affecting an exposed canister during the transfer process.

The transfer cell rooms will not be provided with automatic fire suppression systems. This will prevent the highly unlikely event of dislodging any possible external radioactive contamination on the canisters by the fire water sprinklers. It was determined that the transfer cells will not include automatic fire suppression because the rooms will primarily contain only components that are constructed of noncombustible fire resistive materials (e.g. the storage or shipping cask). From a hazard standpoint, dislodging contamination would likely be a more significant hazard than a potential fire within a transfer cell. Housing only the cask components, it is unlikely that a fire of any magnitude could occur in the transfer cells. The only combustible source in a transfer cell will be from the cask transporter when it is needed to move a storage cask from the cell to the storage pad. This will only occur after the canister is safely contained in the concrete storage cask. The cask storage systems have been analyzed for a fire that bounds a fire from a 50 gallon diesel fuel source as explained in SAR 8.2.5. To insure that a diesel fuel spill in the transporter bay will not flow into a transfer cell, which could lead to a potential fire when the canister is exposed, the floor of the transporter bay will be sloped away from the transfer cells. In addition, to provide equivalent fire protection in the event a fire in the transfer cell or transporter bay does occur, standpipes with 100-ft. hoses will be installed adjacent to the crane bay and cask transporter bay exit locations in accordance with NFPA-801. This will ensure that all areas within the transfer cells will be reachable by a firewater stream in the unlikely event a fire occurs.

The crane bay, cask transporter bay, and transfer cells will contain fire extinguishers for fire suppression.

Fire Zone 2 is classified as a Storage Occupancy in accordance with NFPA-101. The area consists of the low level waste storage room. This area will contain storage containers (55-gallon drums) of ordinary combustibles that will be sealed and kept in the storage area. This area is not required to be protected by an automatic sprinkler system and therefore will only use hose reels to connect to the standpipes and fire extinguishers for fire suppression.

Fire Zone 3 is classified as a Business Occupancy in accordance with NFPA-101. The area consists of the office and building services areas of the building. This area is required to be protected by an automatic sprinkler system and will also use fire extinguishers for fire suppression.

Fire Zones 4 and 5 are classified as Storage Occupancyin accordance with NFPA-101. The area consists of the two storage rooms adjacent to the office and building services area. The two rooms are required to be protected by an automatic sprinkle system and will also use fire extinguishers for fire suppression.
The Canister Transfer Building is constructed of noncombustible materials and is considered a construction Type II structure in accordance with NFPA-220 (Reference 73) as referenced by NFPA-801 and a construction Type II – Fire Rating per the UBC. (The UBC Construction Type II-FR is also used because it is more restrictive and has higher fire-resistance requirements than the NFPA-220 construction Type II classification). Fire protection for the CTB structural steel roof support columns and beams is discussed in Section 4.7.1.5.1. The building is designed to limit the potential effects from a diesel fuel fire with curbs and sloped floors located to contain spilled diesel fuel away from SSCs.

A summary of the Canister Transfer Building fire protection design requirements is as follows:

a. Fire barriers will be designed to the worst case code, i.e. 1 hour fire rated walls and doors per the UBC.
b. A fire suppression system as required by NFPA-801 will be installed in the Cask

Load/Unload Bays of the CTB to suppress a possible fire from the 300 gallon diesel fuel spill. The system will consist of a foam-water system per NFPA-16, which is specifically designed for the suppression of fuel type fires. This type of fire suppression is an extremely conservative approach since a 300 gallon leak is

highly unlikely (the fuel is contained in two 150 gallon side saddle truck tanks) and the shipping cask system are designed to withstand accidents per 10CFR71 that bound the worst case postulated fire for the building.

c. The foam-water system will be designed to discharge for a minimum of 60 minutes in accordance with NFPA 16.
d. Standpipes with hose systems as required by NFPA-801 will be installed at either end of the office area corridor and adjacent to the cask transporter bay, crane bay, and load/unload bay exit locations so that every portion of the building that is not protected by an automatic fire suppression system is reachable by a firewater stream from a 100 ft. hose.
e. The transfer cell rooms will not be provided with automatic fire suppression systems in order to prevent any possible radioactive contamination on the canisters from being dislodged by the water spray. It was determined that the transfer cells do not require automatic fire suppression because the rooms will primarily contain only components that are constructed of noncombustible fire resistive materials (e.g. the storage or shipping cask) that have been analyzed for fires that bound the worst case postulated fire for the building (Ref. storage system SARs).
f. Portable fire extinguishers as required by NFPA-801 will be installed in appropriate locations throughout the building.
g. A fire detection system as required by NFPA-801 will be installed in the all areas of the building in accordance with NFPA 72 (Reference 78).

Security and Health Physics Building

The Security and Health Physics Building fire protection provisions will be designed in accordance with the requirements of the UBC and NFPA 101 as applicable. The building is classified as Group B – for business related functions. The building as a whole will not require any automatic fire suppression systems based on the occupancy of less than 50 persons (UBC 304.1) and floor area of less than 12,000 sq. ft. (UBC

Table 5-B). The building construction is classified as a Type II N, which does not require any special fire rated components for this building (UBC Table 6-A).

The diesel-generator that will be located in the Security and Health Physics Building will be no larger than 150 kW. For 150 kW diesel-generator sets, the maximum fuel consumption is approximately 12 gal/hr. The unit is required to provide a minimum of 24 hours backup power per IEEE 692 (Reference 68) and NUREG-0908 (Reference 74) plus the required 30 minute monthly tests per NUREG/CR-0509 (Reference 75). Conservatively assuming 1 hour monthly test for up to 3 months, then the minimum required fuel tank size must be:

(24 hr x 12 gal/hr) + (3 tests x 1 hr/test x 12 gal/hr) = 324 gallons

Assume 350 gallons for the purposes of determining the Security and health Physics Building UBC building classification and fire zone requirements. The fuel will be contained in a dual wall sub-base tank, which is pre-designed to meet NFPA-37 (Reference 76), requirements on tanks and spill containment requirements.

As addressed above, the diesel generator tank will hold approximately 350 gallons, which exceeds the exempt amount of 120 gallons for closed systems in UBC Table 3-D. Therefore, the diesel generator room, which is classified as a UBC H-3 occupancy , will be provided with a fire sprinkler system in accordance with NFPA 13 and will be separated from all other adjacent interior spaces by a 1 hour fire resistive barrier in accordance with UBC Table 3-D.

Where combustible liquids are present in Group B structures, the UBC requires that the storage and use of such combustibles be in accordance with the fire code, i.e. the NFPA. As noted above, the diesel fuel will be contained in a dual wall tank that will meet all the fire prevention controls required per the NFPA-37 and therefore, will not

Fire hydrants are located near the buildings to support fire suppression of the buildings. A PFSF fire truck is stationed at the site. Presently, a second fire truck is located at the Goshute Village 3.5 miles from the site.

The Canister Transfer Building foam-water sprinkler system, Security and Health Physics Building diesel generator room sprinkler system, and outdoor fire hydrants will be fed water from one of two fire pumps at a fire pump house located outside the restricted area near the Security and Health Physics Building. The foam supply for the foam-water sprinkler system will be located immediately outside of the Canister Transfer Building where it will be connected to the water supply lines. Water for the pumps is supplied by a primary and a backup water tank, each with a capacity of 100,000 gallons. One pump is powered by an electric motor, the other by a diesel engine in the event of a loss of electrical power.

The fire detection system consists of photo-sensitive smoke detectors located in all the facility buildings. The smoke detectors are interconnected within each building and are connected to a central alarm panel located in the Security and Health Physics Building. Annunciation of the smoke alarms occurs within both the building where the detector is located and the central alarm panel. A trip of the fire detection system in the Canister Transfer Building will automatically set off the building's foam-water sprinkler system.

Smoke from a fire in the Canister Transfer Building will be removed by the building's ventilation exhaust fans.

4.3.8.3 System Evaluation

An evaluation of potential fires affecting SSCs classified as Important to Safety is shown in Section 8.2.5. The analysis concludes that these fires will not produce an unsafe condition or preclude the ability of SSCs from performing their safety related

function. The foam-water sprinkler system further ensures that fires that could occur in the Canister Transfer Building load/unload bay will be extinguished within minutes.

PFS will perform a Fire Hazards Analysis (FHA) in accordance with NFPA-801 prior to detailed design of the facility. A review of the list of items recommended for inclusion into the FHA determined that a majority of the analyses and information required in the FHA have already been presented in the SAR, EP, and supporting calculations. Specific information includes:

- Fire protection system and performance criteria (Section 4.3.8.1).
- Design considerations for fire in the storage systems and PFSF buildings (Sections 4.2.1.5.1J, 4.2.2.5.1J, 4.7.1.5.1G, 4.7.3.5.1E, and 4.7.4.5.1D, which show that the spent fuel storage system and transportation systems are already qualified for potential fires that bound the fires at the PFSF).
- Methods for fire prevention, extinguishing, and control (Section 4.3.8.1).
- Types of potential fires (Section 8.2.5)
- That there are no essential power requirements because of the passive safety design of the components (Section 4.3.2).
- Available offsite fire protection (EP Section 1.3 and 3.2D).
- Inspection, testing and maintenance (Section 4.3.8.1).
- Life safety, protection of critical SSCs, and radioactivity releases (Sections 4.2.1.5.1J, 4.2.2.5.1J, 4.7.1.5.1G, 4.7.3.5.1E, and 4.3.8.1).

A fire loading calculation will also be prepared prior to detail design of the facilities as required for the FHA. However, it has been concluded from evaluations already performed that the combustible loading in the building is negligible and that a fire at the site will not adversely affect nuclear safety of the facility nor the health and safety of the public.

NFPA-801 also requires a criticality calculation to show that no fire will present a criticality hazard. Sections 4.2.1.5.4 and 4.2.2.5.4 show that criticality control is

maintained by the design of the storage systems. Therefore, a separate analysis is not required.

Based on the reasons stated above, it is anticipated that the FHA will conclude that the design of the PFSF will provide an adequate defense against major fires due to the low fire loading, passive fire barriers, compartmentalization, fire suppression systems, and fire detection; the design meets the requirements of the Uniform Building Code and applicable NFPA standards; and that the analysis will clearly demonstrate that the level of protection provided for the PFSF is very conservative relative to the level of fire risk.

4.3.8.4 Inspection and Testing Requirements

Preoperational and periodic operational testing and inspection of the fire detection and fire suppression systems will be performed in accordance with requirements of Section 9.2.

4.3.8.5 Personnel Qualification and Training

Training and qualification requirements associated with the testing, inspection, and operation of the fire systems will be in accordance with the requirements of Section 9.3.

4.3.9 Maintenance System

4.3.9.1 Major Components and Operating Characteristics

The PFSF has relatively few maintenance requirements because of the passive nature of the storage system's design. Major components at the PFSF that require routine periodic maintenance include the overhead bridge crane, semi-gantry crane, transfer equipment, and fire suppression system located in the Canister Transfer Building, the rail cars or heavy haul tractor/trailer units, the cask transporters, the backup diesel

generator located in the Security and Health Physics Building, and the temperature monitoring equipment, fire pumps, and fire engine.

Periodic inspection and maintenance is also required to ensure the storage cask air ducts are not blocked from snow, dirt, debris, or small animal nesting per the operation controls and limits given in Chapter 10.

4.3.9.2 Safety Considerations and Controls

Routine maintenance procedures ensure that timely maintenance is performed according to equipment manufacturer's standards. The Operations and Maintenance Building is designed to facilitate activities performed on equipment and provide a safe environment. Ladders and platforms mounted on the walls and cranes in the Canister Transfer Building are used to access the cranes for maintenance and inspection activities. PFSF procedures prevent maintenance of the cranes or transfer equipment near casks loaded with spent fuel to minimize personnel radiation doses. Maintenance and inspection of the temperature monitoring system at the storage casks or the storage cask air vents are controlled by PFSF procedures to ensure that the work is performed ALARA. Maintenance of the fire protection systems is addressed in Section 4.3.8.1.

4.3.10 Cold Chemical Systems

There are no chemical systems required or provided at the PFSF.

4.3.11 Air Sampling Systems

Continuous air monitors, located in the exhaust of each canister transfer cell, monitor radioactivity concentrations in the air leaving each canister transfer cell, where the potential exists for contamination on external canister surfaces to become airborne during canister transfer operations (Section 7.3.5). Since the spent fuel is totally contained within sealed canisters, there is no need for air sampling systems or airborne monitors outside, where storage casks are stored on the pads. A hand held monitor is used to analyze the air sample taken from the shipping cask prior to opening the cask.

4.3.12 Gas Utilities

Propane will be used to provide fuel to all gas heating units located in the PFSF buildings rather than natural gas due to the remote location of the site. Propane for heating the Canister Transfer Building will be stored in a centralized group of four propane fuel storage tanks, with the volume of each tank less than or equal to 5,000 gallons, and the volume of all four tanks no greater than 20,000 gallons (Section 8.2.4.1). This group of tanks shall be located a minimum distance of 1,800 ft south or southwest of the Canister Transfer Building, and shall be a minimum distance of 1,800 ft from the nearest cask storage pads. In addition, this group of propane storage tanks will be located approximately 1,000 ft west-southwest of the Operations and Maintenance Building (it will be further from the Administration Building). The 1,800 ft distance requirement provides a conservative safe standoff distance to assure that a postulated propane vapor cloud explosion will not result in significant damage to the Canister Transfer Building or to loaded storage casks, as discussed in Section 8.2.4.2. .

The propane storage tanks will be above-ground, designed in accordance with the requirements of NFPA 58. The effects of a postulated propane vapor cloud explosion from propane assumed to leak from the group of tanks that supplies the Canister Transfer Building are analyzed in Section 8.2.4.2. NFPA 58 requires that propane tanks between 50 and 2,000 gallon capacity be located at least 25 ft away from any building or adjacent property, and that propane tanks between 2,001 and 30,000 gallons be located at least 50 ft away from any building or adjacent property and 5 ft away from any adjacent container. The propane heating system will be installed in accordance with NFPA requirements. Outdoor piping between the tanks and the buildings will be located below ground and coated or wrapped.

4.3.13 Diesel Fuel Supply

In general, all fueling activities at the PFSF comply with applicable regulations. Operation and use of the stored fuel will be in accordance with 29 CFR 1910 (OSHA) regulations to ensure employee health and safety requirements are met. Prior to fueling, a management plan and procedures will be developed to ensure that personnel are properly trained and fuel deliveries are carried out in accordance with the plan.

4.3.13.1 Fueling of on-site vehicles used at the PFSF

As stated in SAR Section 8.2.4.1, a diesel fuel oil storage tank will be located inside the restricted area (RA), and will supply diesel fuel oil for the cask transporter. This tank will be located near the RA fence, approximately 200 ft northeast of the northeast corner of the Canister Transfer Building and approximately 700 ft from the nearest storage casks. The outdoor tank will be above-ground, mounted on a concrete pad, with a double wall, having all necessary equipment for pumping and dispensing diesel fuel. The tank will have a capacity of approximately 1000 gallons and will store low grade sulfur No. 2-D diesel fuel. The tank includes a double wall for primary and

secondary spill containment requirements, fill and venting requirements, and fire prevention requirements in accordance with NFPA 30, "Flammable and Combustible Liquids Code." The tank will be designed in accordance with the requirements of UL-142, "Above Ground Tanks for Flammable and Combustible Liquids." The tank will also be designed in accordance with UL-2085, "Insulated Secondary Containment for Aboveground Storage Tanks, Protected." This code requires that the tank meet 2-hour liquid-pool furnace fire tests, vehicle impact, and projectile resistance criteria. The station tank will be supplied with fuel from a regional bulk fueling service.

4.3.13.2 Fueling of locomotives used on the Low Corridor Rail Line

The PFSF does not include an on-site diesel fuel storage tank for the locomotives. Rather, the locomotives at the PFSF are fueled outside the restricted area (RA) via a regional bulk fueling service that will deliver fuel to the PFSF approximately every two weeks with a tanker truck. Use of the fueling service will eliminate the need to store large quantities of fuel required for the locomotives near the PFSF as well as fuel station maintenance. The fueling service must comply with EPA and OSHA regulations and must provide containment and clean up for any spills in accordance with the regulations.

4.3.13.3 Fueling of heavy-haul vehicles used for the Intermodal Transfer Point

The heavy-haul vehicles will be fueled via a self-contained diesel fuel filling tank located near the Operations/Maintenance Building. The tank will be the same as the tank described above for the transporter vehicles and will meet the same criteria per NFPA 30, UL-142, and UL-2085 except that it will have a capacity of approximately 1200 gallons. The station tank will be supplied with fuel from a regional bulk fueling service.

THIS PAGE INTENTIONALLY LEFT BLANK

4.4 DECONTAMINATION SYSTEMS

4.4.1 Equipment Decontamination

Normally, decontamination of equipment is not required at the PFSF. Decontamination activities are performed as needed at the originating nuclear power plants prior to transferring canisters to the PFSF. Under off-normal conditions in which contamination of equipment or structures is encountered, decontamination would be performed using methods (e.g., paper wipes or rags) that only result in the generation of dry active waste.

4.4.2 Personnel Decontamination

Contamination of personnel is not expected to occur under normal conditions of operation. In accordance with the PFSLLC's policy to prevent generation of liquid radioactive waste, any necessary decontamination of personnel will be conducted using methods that only produce dry active solid radioactive waste. Decontamination methods would include wiping the contaminated area with rags or paper wipes. Provisions for personnel decontamination are contained in the Security and Health Physics Building.

THIS PAGE INTENTIONALLY LEFT BLANK

4.5 SHIPPING CASKS AND ASSOCIATED COMPONENTS

Spent fuel shipping casks are used to transport the spent fuel canisters from the originating power plants to the PFSF and later offsite. The shipping casks are designed to protect the canisters from the effects of environmental conditions, natural phenomena, and accidents in accordance with 10 CFR 71. Shipping casks are not licensed under 10 CFR 72. However, since the shipping casks are used to transport spent fuel to and from the PFSF and are part of the canister transfer process in the Canister Transfer Building, this section provides a brief summary of the shipping casks and associated components.

The shipping casks are shipped to the PFSF and shipped offsite at a later date complete with impact limiters, a shipping cradle, and tie downs. The shipping casks are shipped from the railroad mainline to the PFSF either by rail on a railroad line or by highway. Shipment by highway requires the shipping casks be transferred from the rail car to a heavy haul tractor/trailer at an intermodal transfer point. During the rail to trailer transfer, the cask and shipping components remain an integral unit under 10 CFR 71 packaging requirements. At the PFSF, the shipping cask is unloaded from the rail car or heavy haul tractor/trailer and moved to a canister transfer cell where the shipping cask is opened and the canister is removed. After the canister is unloaded, the shipping cask is resealed and sent back to the power plants for reloading of another sealed canister of spent fuel.

The shipping components addressed in this section are:

- HI-STAR shipping cask system
- Shipping cask repair and maintenance area
- Skull Valley Road / Intermodal transfer point
- Low Corridor rail line

The shipping casks and associated components are described below. Figures are provided to illustrate the systems and their function.

4.5.1 HI-STAR Shipping Cask System

The HI-STAR system is a shipping system used to ship spent fuel from the originating power plants to the PFSF. The HI-STAR (Holtec International Storage, Transport, and Repository) is a spent fuel packaging design in compliance with DOE's design procurement specifications for multi-purpose canisters and large transportation casks. The HI-STAR system consists of the same sealed metal canister as used in the HI-STORM storage system, which is confined within a metal overpack or cask with impact limiters. Holtec submitted a SAR to the NRC in accordance with 10 CFR 71 for the HI-STAR system (Reference 3) and the NRC has issued a Certificate of Compliance for the HI-STAR 100 shipping cask system (Reference 80). The HI-STAR system components are shown on Figure 4.5-1. Details of the system and design parameters are addressed in the HI-STAR shipping SAR.

4.5.2 (deleted)

4.5.3 Shipping Cask Repair and Maintenance

If shipping cask repair or maintenance activities are necessary, they will be conducted at the Operation and Maintenance Building or at a vendor designated location. No special contamination control measures are anticipated for repair or maintenance activities since the spent fuel is contained within a sealed canister and the shipping casks used for the PFSF do not enter any nuclear plant spent fuel pools and therefore, remain free of radioactive contamination.

Health physics surveys will be taken on all incoming canisters as normal receiving operations at the PFSF. In the event contamination above acceptance levels is discovered and cannot be removed, the canister will be shipped back to the originating nuclear power plant for canister decontamination and/or spent fuel repackaging.

4.5.4 Skull Valley Road / Intermodal Transfer Point

4.5.4.1 Intermodal Transfer Point

Shipments that utilize the Skull Valley Road / intermodal transfer point are moved by the use of roads from the rail mainline to the PFSF using heavy-haul tractor/trailers. The intermodal transfer point is located 1.8 miles West of Timpie, approximately 24 miles north of the PFSF would consist of about 25 acres of which 13 acres are disturbed by usage.. The intermodal transfer point equipment is designed to accommodate transfer of the shipping casks from the rail car to the heavy haul tractor/trailer unit for highway shipping. The intermodal transfer point consists of rail sidings off the Union Pacific Railroad mainline, a 150 ton gantry crane, and a tractor/trailer yard area. The gantry crane is a single-failure-proof crane to preclude the accidental drop of a shipping cask even though the cask is designed to withstand such drops in accordance with 10 CFR 71. The crane is housed in a weather enclosure, which provides a clean, dry environment for transfer of the shipping cask.

The intermodal transfer point is shown on Figure 4.5-3.

4.5.4.2 Shipping Cask Heavy Haul Tractor/Trailer

Heavy haul transport tractor/trailers are used to transport the shipping cask from the intermodal transfer point to the PFSF by highway. The maximum weight of a loaded shipping cask with impact limiters and shipping cradle is approximately 142 tons, which requires the use of overweight trailers. The heavy haul tractor/trailers are designed to accommodate road conditions at the intermodal transfer point, frontage road, Skull Valley Road, and PFSF. A minimum of 2 heavy haul tractor/trailer units would be used if the casks were transported by highway from the ITP to the PFSF. The units are designed to travel at low speeds and are 12 ft wide with multiple wheel sets to provide stable transport of the shipping cask. Based on vendor information from three of the largest trailer manufacturers for this type of trailer, the heavy haul trailers range from 150 ft to 180 ft in length. The trailers use up to 100 tires to distribute the weight within typical highway limits. However, use of these trailers usually requires permitting due to the overall weight and length. The trailers are articulated, that is they can pivot in several places and include steerable axles to accommodate tight radius turning. The turning radius ranges from 75 ft to 150 ft, depending on whether steerable dollies are used. The tractor/trailers will usually be stored in either the Canister Transfer Building truck bay or in the intermodal transfer point enclosure in preparation for their next assigned task. Both buildings are designed to fully enclose the tractor/trailer unit. Maintenance activities will be conducted at the Operation and Maintenance Building, except such maintenance duties that are complex enough in nature that they require off-site contracted major maintenance. It is anticipated that contract facilities within the area would be used for such items as engine overhaul, etc.

The unit is classified as not Important to Safety since safety of the spent fuel canister is maintained by the shipping cask. A typical heavy haul transport tractor/trailer unit is shown on Figure 4.5-4.

4.5.5 Low Corridor Rail Line

4.5.5.1 Rail Line

Shipments that utilize the railroad line continue on from the rail mainline to the PFSF by rail car. A rail line will be built from the Union Pacific mainline located at Low Junction to the PFSF. The rail line is designed to standard railroad load, grade, and clearance requirements per the Union Pacific Railroad and industry standards to facilitate use of Union Pacific and standard railroad equipment.

The Low Corridor rail line is shown on Figure 4.5-6

4.5.5.2 Shipping Cask Rail Car

The railcars will be heavy duty 3 axle or span bolster 4 axle (2 sets of 2-axle trucks) railcars with a capacity of approximately 150 tons similar to those used by the Department of Defense for their spent fuel shipments. The maximum weight of the shipping cask with impact limiters and shipping cradle on the railcar is approximately 142 tons as discussed in Section 4.5.4.2, which would be within the allowable load for a 150 ton railcar. The Canister Transfer Building cask load/unload bays are designed with railroad tracks to facilitate rail car shipments where the shipping casks would be unloaded or loaded.

The radius of the track for railcars is dependent on various factors such as car length. The final design is not complete on the railcar, so the turning radius of the cask car has

not been determined. However, direct rail transportation to the PFSF has been designed using mostly 3 degree curves (1909 ft radius) with the tightest curve being a 10 degree curve (573 ft radius). The railcars, which typically will be in transit to pickup more spent fuel, will be stored on the railroad storage siding at the PFSF when not in use (See SAR Figure 1.2-1). If the intermodal transfer point is utilized, parking for the cars when not in use would either be provided at the intermodal transfer point or at leased space somewhere in the vicinity. Routine maintenance will be performed at the PFSF or the intermodal transfer point, depending on the case. Major overhauls and maintenance would have to be in a privately operated railroad equipment servicing shop approved for such activities and inspections.

The railcars are classified as not Important to Safety since spent fuel safety functions are maintained by the shipping cask. A typical 150-ton railcar similar to what could be used at PFSF is shown on Figure 4.5-5.

4.6 CATHODIC PROTECTION

There are no cathodic protection systems required or provided at the PFSF. Underground piping used for the water supply and septic systems consists of non-metallic piping. Underground conduit consists of non-metallic conduit encased in concrete duct banks.

THIS PAGE INTENTIONALLY LEFT BLANK

4.7 SPENT FUEL HANDLING OPERATION SYSTEMS

The spent fuel handling systems are provided to transfer the spent fuel canisters from the shipping cask to the storage cask, and eventually back to the shipping cask for transporting offsite. During transfer operations, the spent fuel remains confined within the sealed metal canister at all times. No individual spent fuel assemblies are handled at the PFSF.

The spent fuel handling systems used to handle spent fuel at the PFSF consist of the following:

- Canister Transfer Building
- Canister transfer cranes
- HI-STORM transfer equipment
- Cask transporter

The spent fuel handling systems are designed to ensure adequate safety and to withstand the effects of site environmental conditions, natural phenomena, and accidents in accordance with 10 CFR 72.122(b) and 10 CFR 72.128(a).

The handling SSCs are designed to permit testing, inspection, and maintenance in accordance with 10 CFR 72.122(f). The acceptance test and maintenance program of the storage systems is specified in HI-STORM SAR Chapter 9.

Regulation 10 CFR 72.122(l) requires that the storage systems be designed to allow ready retrieval of spent fuel for further processing or disposal. The canister based storage systems utilized at the PFSF accommodate this requirement. At the end of the storage period, the sealed canisters will be shipped offsite to the federal government.

Chapter 5 outlines the procedure for canister transfer from a storage cask into a shipping cask and offsite.

Retrieval of individual spent fuel assemblies from the canister before offsite shipping is not anticipated. As described earlier in this chapter, the canister is designed to withstand all normal, off-normal, and accident-level events. Nevertheless, retrieval of the spent fuel from the canister can be achieved if necessary. In the event the spent fuel assemblies require unloading prior to being shipped offsite, the canister will be shipped back to the originating nuclear power plant via a shipping cask (if the originating plant is still available), or to another facility licensed to perform such operations, where the individual spent fuel assemblies will be transferred into a different canister.

Each of the spent fuel handling systems is described in the following sections. Figures are provided to illustrate the major components of the systems and their function.

4.7.1 Canister Transfer Building

The Canister Transfer Building is provided for physical protection and shielding of the canisters during transfer from the transportation cask to the storage cask. The Canister Transfer Building consists of the shipping cask loading/unloading bays, canister transfer cells, a 200 ton overhead bridge crane, a 150 ton semi-gantry crane, a low level waste storage room, equipment and storage rooms and personnel offices/restroom areas.

The Canister Transfer Building is a reinforced concrete structure in which the fuel canisters are transferred from the shipping casks to the storage casks. It is supported on a 5 ft thick rectangular base mat 279.5 ft long by 240 ft wide. There is a 1.5 ft deep shear key around the perimeter of the mat to help resist seismic sliding forces. The main portion of the building is 90 ft high and contains the three transfer cells. The perimeter shear walls are 2 ft thick and support the roof and the two cranes that are used in the canister transfer operations. The perimeter walls and the 8 inch thick roof provide tornado missile protection for the transfer cells. The reinforced concrete roof slab is poured on 1-1/2 inch deep metal decking. A steel frame supports the vertical roof dead weight, snow, and seismic loads. The decking spans approximately 5 ft to 16 inch deep steel beams. The 16 inch deep roof beams span up to 30 ft in the north-south direction to the main roof girders. 5 ft deep steel girders spanning 65 ft in the E-W direction carry the vertical roof loads to embedded plates set in the building's concrete walls. Horizontal seismic load from the roof mass is transferred to the building's walls by diaphragm action of the roof slab.

There are three openings (22' wide) through the wall on the west side of the canister transfer cells to allow cask transporter access to each transfer cell. These openings are tornado missile protected during canister transfer operations by 1 ft thick rolling doors fabricated from steel plate and concrete.

On the east and west sides of the main building are lower roofed areas that house the cask transporter aisle (on the west side) and an office area with equipment and storage rooms (on the east side). The cask load/unload bay (used for the off loading of shipping casks) extends out from the main portion of the building on both the east and west sides under the low roofed areas. The low roofs are 30 ft above grade and are constructed of 8 inch thick reinforced concrete supported on a structural steel frame similar to the high roof except the main girders have shorter spans and are 36 inches deep. The low roofs provide lateral support for the N-S perimeter walls of the main building. The roof steel members for both the upper and lower roofs are adequate to resist the required loadings (snow, dead, wind, seismic) within allowables (Reference 92).

The design of the Canister Transfer Building has been performed for critical areas of the structure for the most severe load combinations. Details of the analysis and design are summarized in Section 4.7.1.5.3. Loads provided by the crane vendor have been incorporated in the design and will be verified during the detailed design phase of the project.

No floor drains are located in the operational areas of the Canister Transfer Building to preclude the possibility of contamination entering the septic system. Floor sumps located in the center of each shipping cask load/unload bay, described in Section 4.3.8.1, will collect water from rain and snow that may run off onto the floor from a spent fuel shipment, since the floors are sloped towards the sumps. Collected water will be sampled to ensure no contamination is present prior to removal.

4.7.1.1 Design Specifications

The building will be designed in accordance with the Principal Design Criteria contained in Chapter 3. The Canister Transfer Building is a massive reinforced concrete structure with thick walls provided for tornado-generated missile protection and radiation

shielding. The building will be designed in accordance with the provisions of ACI-349 (Reference 15).

4.7.1.2 Plans and Sections

The Canister Transfer Building is shown in Figure 4.7-1.

4.7.1.3 Function

The function of the Canister Transfer Building is to assist in the canister transfer operations at the PFSF. A description of the canister transfer operations is contained in Chapter 5.

Canister Transfer Building functions include:

- Load or unload spent fuel shipping casks from the heavy haul tractor/trailers.
- Provide weather and tornado proof protection for performing the canister transfer operations.
- Provide the support structure for the single failure-proof cranes required for the transfer operations.
- Provide radiological shielding during the transfer operation.
- Store potential low-level radioactive waste from health physics surveys.
- Provide storage and laydown space for transfer and shipping equipment.
- Provide a staging area for storage casks.

4.7.1.4 Components

The major components that comprise the Canister Transfer Building are the cask loading/unloading bays, three canister transfer cells, the 200 ton overhead bridge crane, the 150 ton semi-gantry crane, crane runway girders and their supports, cask transporter bay, tornado-missile barriers, low level waste storage room, radiation shield

walls and doors, equipment lay-down areas, storage cask delivery and staging platform, mechanical and electrical equipment areas, and personnel offices and restroom areas.

4.7.1.4.1 Seismic Support Struts

The seismic support struts are rigid strut assemblies that secure the shipping, storage, and transfer casks to the Canister Transfer Building columns during transfer operations. The struts ensure that the casks will remain stable and will not topple in the event of an earthquake. The struts are designed to resist the horizontal forces due to the seismic accelerations developed in the seismic analysis of the building (Reference 62). The casks do not require seismic restraint in the vertical direction since the upward seismic forces are less than the deadweight of the casks.

The struts are connected to the shipping cask after it is moved into the transfer cell. Struts are also attached to the transfer cask when it is placed on top of the shipping cask or storage cask, prior to disconnecting the transfer cask from the crane. Each cask utilizes two struts, vertically positioned near the cask center of gravity, that provide lateral restraint in two orthogonal directions. Figure 4.7-7 is a schematic diagram of the support struts. The struts are connected to the storage cask during the process of transferring the canister.

The support struts are designed and procured as rigid strut assemblies that conform to ASME III, NF requirements for Class 2 nuclear grade supports. The struts consist of a rigid tubular body with threaded eye rods on both ends. Each strut is pinned to a bracket that is secured to the cask and to the building columns. At the building columns, the brackets are welded to steel plate secured to the column with anchor rods.

4.7.1.5 Design Bases and Safety Assurance

The Canister Transfer Building is classified as being Important to Safety to provide the safety assurance commensurate with canister transfer activities. The design bases for the Canister Transfer Building are described in Chapter 3.

4.7.1.5.1 Structural Design

The building structure has been analyzed and critical areas have been designed for the critical loads cases. A design evaluation determined the worst loading case and areas of the structure. The rationale for selection of the worst loading case for the evaluation is provided below:

The load combinations for reinforced concrete design of the Canister Transfer Building, given in Section 3.2.11.4.1 are as follows:

a.) $U_c > 1.4\ D + 1.7\ L$

b.) $U_c > 1.4\ D + 1.7\ L + 1.7\ H$

c.) $U_c > 0.75(1.4\ D + 1.7\ L + 1.7\ H + 1.7\ T)$

d.) $U_c > 0.75\ (1.4\ D + 1.7\ L + 1.7\ H + 1.7\ T + 1.7\ W)$

e.) $U_c > D + L + H + T + E$

f.) $U_c > D + L + H + T + A$

g.) $U_c > D + L + H + T + W_t$

h.) $U_c > D + L + H + T + F$

i.) $U_c > D + L + H + T_a$

Based on a review of the above load combinations, it is obvious that combination b) includes and envelopes combination a) and combination d) includes and envelopes combination c). Loads A, F, and T_a are considered insignificant for the Canister Transfer Building (CTB) design as discussed below:

Accident Loads (A) - The accident loads to be considered for the PFSF, as discussed in SAR Section 3.2, are explosion overpressure, drop/tipover, accident pressurization, and fire. As required in SAR Section 3.3.6, the PFSF design and layout shall assure that the peak positive incident overpressures at important to safety SSCs from credible onsite or offsite explosions do not exceed 1.0 psi. The effects on the Canister Transfer Building of a 1.0 psi peak positive incident overpressure from an explosion are less severe than the 319 psf (2.22 psi, derived below) differential pressure resulting from the design tornado. As discussed in SAR Section 8.2.6, a storage cask vertical drop from a height greater than 9 inches is not credible, nor is a storage cask tipover. A storage cask drop would generate loads in a local area only and would not control the design of the 5-ft thick CTB foundation mat. As discussed in SAR Section 8.2.10, accident pressurization is not a credible accident and will not effect the design of the CTB. SAR Section 8.2.5 discusses a fire in the CTB. There are no loads from a fire that need to be considered in the structural design of the CTB.

Flood Loads (F) - As stated in SAR Section 3.2.11.4, flood loads are not applicable to this site.

Accident-level Thermal loads (T_a) – There are no accident level thermal loads applicable to the structural design of the CTB.

Since loads A, F, and T_a are insignificant for the Canister Transfer Building, the load combinations above can be reduced to:

b) $U_c > 1.4\ D + 1.7\ L + 1.7\ H$

d) $U_c > 0.75\ (1.4\ D + 1.7\ L + 1.7\ H + 1.7\ T + 1.7\ W)$

e) $U_c > D + L + H + T + E$

g) $U_c > D + L + H + T + W_t$

Load combinations d) and g) address wind loads. The design basis tornado wind (W_t) is 240 mph and the design wind (W) is 90 mph. Since all the other loads in combinations d) and g) are minor or non contributors in the horizontal direction as compared to the wind loads, it can be seen that combination g) above, which includes the higher tornado wind loads, will be more critical than combination d), which only includes design wind loads.

Load combination b) only affects elements subjected to vertical loads. For the roof, assuming a 9 inch thick (average thickness) concrete slab with a density of 150 pcf and a 50 psf live load, the uniform load on the slab in load combination b) is calculated to be 1.4 (112.5 psf) + 1.7 (50 psf) = 242.5 psf. For load combination e) with the vertical acceleration of the roof being approximately 0.9 g, the uniform load is 112.5 psf + 50 psf + 0.9 (112.5 psf) = 263.8 psf. This demonstrates that for vertical loads, load combination e) will be more critical than load combination b). Therefore, the only two load combinations that could govern the design are:

e) $Uc > D + L + H + T + E$

g) $Uc > D + L + H + T + W_t$

Comparison of these two load combinations can be made on a global basis. Because of the larger exposed building area in the E-W direction, the horizontal load due to tornado wind will be greater in that direction. The exposed building area is

approximately (270')(90') = 24,300 ft^2. The lateral force due to tornado wind is determined from NUREG-0800, Section 3.3.2 as:

Lateral force = 0.00256 V^2 x wall pressure coefficient x wall area

Where wall pressure coefficient = 0.8 (windward wall) + 0.5 (leeward wall)

Therefore, the lateral force = 0.00256 $(240)^2$ (0.8 + 0.5)(24,300 ft^2) = 4,658,135 lb. ≅ 4,658 kips. By comparison, the lateral force due to the design basis earthquake in the E-W direction is 35,400 kips. The earthquake force is taken from Calculation 05996.02-SC-5 (Reference 44) and excludes the force due to acceleration of the base mat.

Out of plane pressures on the exterior walls due to tornado loads are caused by the 240 mph wind velocity and the 1.5 psi pressure drop. The worst pressure is outward on the side walls and is equal to 0.00256 $(240)^2$ (0.7) + 1.5 psi (144 in^2/ft^2) = 319 psf. The out of plane seismic inertia load, based on a typical horizontal acceleration of 0.9 g results in an equivalent pressure for a 2 ft. thick wall of 2'(150 pcf)(0.9) = 270 psf. Although the pressure due to tornado is slightly higher than that due to seismic loads, the shear in the walls due to seismic are much greater and seismic loads will govern the design. For completeness, bending in the exterior walls due to tornado will be checked at the final design stage, and some additional reinforcing may be required in local areas. Effects of tornado missiles are addressed in the calculation for design of reinforcing steel for the CTB (Reference 47).

The Canister Transfer Building is a large and massive building consisting of exterior reinforced concrete walls 2'-0" thick, a reinforced concrete roof 8 inches thick (minimum), and a solid reinforced concrete mat foundation 5'-0" thick. The interior partitions that make up the low level waste holding area will be constructed of reinforced concrete. The office areas and rest rooms on the east side of the building will utilize

steel framed partition walls covered with gypsum board. The equipment room partition walls are concrete block. The total weight (static load) of the building and foundation is approximately 89,500 kips (Reference 44) or 44,750 tons.

The following provides verification that the site specific and operational criteria of the PFSF are enveloped by the Canister Transfer Building analysis and design.

A. Dead Loads

The Canister Transfer Building will be designed for the self weight of the structure and all permanently attached equipment.

B. Live Load

The Canister Transfer Building will be designed for the following live loads:

- Snow and ice loads - 45 psf per County Building Department exposure C, importance factor = 1.2 (Category IV) per ASCE-7
- Bridge crane and semi-gantry crane loads
- Normal crane handling loads and transfer operations Normal wind load - 90 mph, exposure C, importance factor = 1.15 (Category IV) per ASCE-7
- Vehicle loads (including impact loads)
  - Fully loaded cask transport vehicle
  - H20-44 truck per AASHTO
  - Heavy haul tractor/trailer
  - Rail car and prime mover
- Equipment Loads
  - Storage cask (with loaded canister and transfer cask)
  - Transfer cask (with loaded canister)
  - Shipping cask (with loaded canister and transfer cask)

The overall seismic analysis of the building and foundation does not specifically include the additional weight of the shipping casks, transfer casks, and storage casks. However, an allowance for live load on the mass of the mat was included in the lumped mass model to account for miscellaneous equipment and minor structural elements not discretely included in the mass calculations. The heaviest cask is a loaded concrete storage cask with a maximum weight of approximately 178 tons (Section 4.7.2.5.1). Although the loaded concrete storage casks are very heavy, each would equal only about 0.4 percent of the total mass of the structure. In addition, the casks will be located directly on the mat foundation and will have very little effect on the seismic response of the building itself.

The Canister Transfer Building is provided with three bays that are used for canister transfer operations. Shipping casks containing canisters will be moved immediately from the heavy haul tractor-trailer or rail car to the canister transfer bays. If the canister transfer bays are in-use, a maximum of two loaded shipping casks can be parked in the rail bays. Therefore, the maximum number of loaded casks within the entire building would be five at any one time (3 storage and 2 shipping). Empty shipping casks will be returned immediately or stored on the trailer or rail car outside of the Canister Transfer Building. There will be a maximum of four metal transfer casks, but their weight is relatively insignificant when not loaded.

For the design of the mat foundation, two worst-case load combinations were investigated. These are described in Section 4.7.1.5.3. Ground floor live loads (i.e., casks at various locations) were neglected in both of the load combinations considered. This is conservative because the maximum bending moments in the mat foundation occur at the intersection with the exterior walls, and are positive (tension on bottom face). The bending moments in the mat foundation away from the walls are negative (tension on top face). Application of live loads, including the weight of the casks, will

result in bending moments that counteract the bending moments from these other critical load cases. Therefore, it is conservative to omit these loads in the analysis of the Canister Transfer Building mat foundation for the two load combinations considered. A calculation describing the mat foundation loading cases and designs is contained in Reference 46.

C. Lateral Soil Pressure

Below grade portions of the Canister Transfer Building will be designed for loads from lateral soil pressure, including loads in excess of geostatic pressures resulting from the presence of adjacent surcharges or vehicular traffic.

D. Thermal Loads

The Canister Transfer Building will be designed to accommodate the site-specific extreme temperatures. Expansion joints will be provided if required to accommodate thermally induced movements in the structure.

E. Tornado Winds and Missiles

The Canister Transfer Building will be designed to protect all Important to Safety SSCs (see Chapter 3, Table 3.4-1) housed within the building from the effects of tornado winds and tornado-generated missiles. The Canister Transfer Building will be designed for the 240 mph wind speed and 1.5 psi pressure drop site specific design basis tornado event. The tornado wind speed will be converted to wind pressures in accordance with the provisions of ASCE-7 (Reference 31). Tornado wind and tornado pressure drop will be considered to act simultaneously. The worst case wind and pressure distribution acting on the structure as a whole and on individual building elements will be determined based on the physical size of the structure in relation to the size and characteristics of the design basis tornado. The structure will be designed to

withstand the tornado wind and pressure drop by means of its static strength without the need to resort to venting of the structure.

The Canister Transfer Building will be designed to resist the effects of both horizontal and vertical impacts of the design basis tornado-generated missiles. Building components will be of sufficient strength and size to withstand the missile impact without compromising the strength and stability of the structure as a whole and to prevent penetration of the missile and spalling of the concrete face interior to the point of impact. The walls and roof that form the tornado missile barrier are shown in Figure 4.7-8. There is a specifically designed sliding door at the west side of each of the three canister transfer cells (on column line C), which can be opened to allow the cask transporters to enter the transfer cells from the transporter aisle. These three doors provide tornado missile protection when closed. The design of these doors is documented in PFSF Calculation No. 05996.02-SC-14 (Reference 88). The building layout as well as specifically designed labyrinths will prevent tornado missiles from entering through door or ventilation openings in the walls and roof and potentially impacting or damaging the fuel canisters, single failure proof cranes and their supports, or other Important to Safety SSC's housed within the building.

F. Earthquake

The Canister Transfer Building has been analyzed for the PFSF design basis ground motion (0.711g horizontal, 0.695g vertical – See Section 3.2.10.1.1). The structure has been modeled and analyzed using a three-dimensional seismic analysis. The dead loads from the bridge and semi-gantry cranes will be located so as to produce the highest design loads and member stresses within the structure. Lifted loads from the cranes will be included in the seismic analysis. Results from the seismic analysis are used in the design of the building.

The walls of the canister transfer cells, along with the east and west sliding doors of each cell, are seismically designed to withstand earthquake induced loads and remain

in place following the PFSF design basis ground motions. The design of these doors is documented in PFSF Calculation No. 05996.02-SC-14 (Reference 88).

G. Fire

The postulated fire accident for the Canister Transfer Building is discussed in SAR Section 8.2.5. Since the Canister Transfer Building will be equipped with fire detection and suppression systems and be constructed of reinforced concrete, which has both a high thermal inertia and is inherently noncombustible, the postulated fire accident will have no effect on the structural strength or stability of the Canister Transfer Building concrete structure as required per 10 CFR 72.122(c). Details of the fire protection system are discussed in SAR Section 4.3.8.

The CTB structure construction classification is Type II-FR per the UBC (Reference 25), and Type II-222 per NFPA 220 (Reference 73). The structural steel roof support columns and steel roof support girders and beams will be fireproofed to provide the required 2-hour fire resistance rating. The maximum credible fire for the CTB structure was determined to be a fire that occurs in the shipping cask load/unload bay involving fuel in the diesel tractor and the tractor/trailer tires, as discussed in Section 8.2.5.2. The 300-gallon diesel fuel spill burns for 16 minutes, and the tire fire burns for 30 minutes; therefore, both times are bounded by the 2-hour fire resistance rating. The plume and upper layer temperature calculation (Reference 94) determined that the maximum temperatures at the CTB structure produced by the maximum credible fire are lower than the temperatures specified in ASTM E119 (Reference 93) that are used during the tests to determine the fire resistance rating of the concrete and fireproofed steel structural elements. The maximum credible fire would not cause a failure of the CTB structure.

H. Lightning

The Canister Transfer Building is approximately 92 feet tall and is a possible lightning target. A lightning Risk Assessment performed in accordance with NFPA 780 determined that the Canister Transfer Building at the PFSF has a "moderate to severe risk factor." The risk assessment was based on the following criteria:

- The building houses the handling of hazardous materials
- The building construction consists of reinforced concrete w/ concrete roof
- The building extends more than 50 ft above adjacent structures or terrain
- The area topography is flat ground
- The building contains critical operating equipment
- The lightning frequency Isoceraunic level for the site location in Utah has 31 – 40 mean annual number of days with thunderstorms

Therefore the Canister Transfer Building will be designed with lightning protection features in accordance with NFPA 780. An air terminal lightning protection system will be installed on the building to protect the building from damage from a lightning strike. Air terminals will be erected on the ridge and perimeter of the upper roof and on the perimeter and interior of the lower roof areas. The air terminals will be interconnected to a main conductor cable that will provide a two-way path to ground for any of the terminals. The main conductor cable will be connected to down conductors that extend to ground rods around the perimeter of the building. All lightning protection materials will use NFPA 780 Class II materials since the building exceeds 75 ft in height. A lightning protection system as described above will ensure that lightning strikes will not prevent any SSCs that are important to safety from performing their safety function.

4.7.1.5.2 Shielding Design

The Canister Transfer Building is designed to provide radiological shielding during the transfer operations. A portion of the building is divided into canister transfer cells where the transfer operations are performed. The cells are surrounded by concrete shield walls that are designed to limit the radiation doses from the canister transfer operations to personnel outside of the cell to 2 mrem/hr, which is below the 5 mrem/hr dose level

that establishes a "radiation area" per 10 CFR 20.1003. Large sliding doors for moving shipping and storage casks in and out of the cell are made of steel with a concrete or polyethylene (or similar) shield, as necessary, to minimize neutron doses. Personnel access openings into the cells are designed with a labyrinth of concrete to mitigate streaming of radiation. The walls and sliding doors of the canister transfer cells shall be seismically designed to withstand earthquake induced loads and remain in place following the PFSF design basis ground motion.

A shielding analysis has been performed assuming canisters containing design basis fuels involved in canister transfer operations to determine transfer cell wall and cell door thickness requirements. The analysis considered attenuation of the radiation doses through the shield walls and doors to locations outside the cell (Reference 91).

4.7.1.5.3. Structural Analysis

The design of the Canister Transfer Building included the conceptual drawings shown in the Figure 4.7-1 and design criteria identified in Chapter 3 and summarized in Table 3.6-1. The methodology and reference standards identified for use in the building seismic analysis is described in Section 3.2.10. Load combinations for the building design are shown in Section 3.2.11.4.

The first consideration in the design was the selection of the critical load combinations. It was judged that the critical load cases would be those including the ISFSI design basis ground motion, since the building is subjected to high seismic loads and relatively low (Zone 3) tornado loads. A seismic analysis of the structure was performed to determine the seismic loads for the building design, and to generate in-structure response spectra for the design of the overhead bridge crane and semi-gantry crane, both supported on the Canister Transfer Building walls. The seismic analysis was performed following the guidelines of ASCE-4 (Reference 20). To perform the analysis,

the first step was to develop three acceleration time histories (N-S, Vertical, and E-W) which are required to be consistent with the site ground response spectra and independent of one another. The time histories were developed from a near-source recording of the 1980 M 6.9 Irpinia, Italy normal-faulting earthquake. The original recordings were rotated in fault-normal and fault-parallel orientations and then scaled to match the 2,000-year return period design response spectra using both frequency domain (Reference 36) and time domain (Reference 37) approaches. The final time histories were then verified to meet the requirements of the Section 3.7.1 of the Standard Review Plan (Reference 5) and ASCE-4. The analysis is documented in Calculation 05996.02-G(PO18)-3, Rev. 1 (Reference 39). The final time histories used in the seismic analysis of the Canister Transfer Building are shown in the calculation.

The building is founded on a layered soil medium, so it was necessary to consider soil-structure interaction effects. To accomplish this, the complex frequency method, as described in ASCE-4, was used. Impedance functions were developed to represent the subgrade, using the layered dynamic soil properties described in Calculation G(P018)-2 (Reference 40).

The impedance functions were developed, using the Stone & Webster computer program REFUND (Reference 41), by considering the foundation mat as a rigid structure located at the surface of the soil profile. These assumptions are appropriate since the building foundation is a five-foot thick concrete mat located at near grade. Development of the impedance functions is documented in calculation SC-4 (Reference 42). A three-dimensional lumped mass model was developed to represent the structure. Lumped masses are assigned at the base mat (El. 95'-0"), the lower roof (El. 130'-0"), the crane elevation (El. 170'-0") and the upper roof (El. 190'-0"). Additional mass points were added at El 170'-0" to simulate local flexibility of the walls supporting the crane in the E-W direction and at El. 190'-0" to simulate the local flexibility of the roof in the vertical direction.

The impedance functions and the lumped mass model were combined, and the analysis was performed using the Stone & Webster computer program FRIDAY (Reference 43). The three input acceleration time histories were applied simultaneously as free field motions at the surface of the soil profile. Results of the analysis included displacement and acceleration time histories at each of the lumped mass points of the structural model. In-structure response spectra were developed from the acceleration time histories. The analysis was performed for three conditions, using best estimate, low range and high range soil properties. These soil properties were developed in Reference 40 to address possible uncertainties in the soil parameters and in the soil-structure analysis. The results of all three load cases were enveloped for worst-case conditions. The resulting enveloped in-structure response spectra were then peak broadened by +/- 15%. The zero period accelerations (ZPA) at each point of the lumped mass model and response spectra at El. 170'-0", which is the bridge crane support location are presented in the dynamic analysis described in calculation SC-5 (Reference 44).

A detailed analysis of the final design configuration of the building will be performed using the ANSYS computer program (Reference 45) with a 3-dimensional finite element model. The results of this analysis will be used to design the reinforcing steel for the concrete walls, slabs, beams and columns (pilasters) of the building. This detailed analysis and design will be done for the load combinations for the building set forth in Section 3.2.11.4 and will be performed in accordance with the applicable codes and standards identified in Section 3.2.11.4.

In addition, the detailed ANSYS analysis will follow the same general approach as the ANSYS analysis previously performed for the conceptual design configuration of the building. In that earlier analysis, a model of the soil was developed, extending 360 feet below the mat and approximately 360 feet to all sides of the mat. The soil was modeled with three-dimensional elastic solid elements, which were assigned properties

consistent with the best estimate properties used in the seismic analysis. This model was condensed to a super-element that was coupled with the structural model. Compression-only elements were used to join the common nodes of the soil model and the base mat of the structural model. The structural model of the concrete building was developed from elastic plate elements (for slabs and walls) and elastic beam elements (for beams and columns). Initial wall and slab thickness and beam and column sizes were determined from hand calculations. Minimum wall and roof thicknesses were selected based on tornado missile requirements. The typical size of the plate elements was five feet square.

Two critical load cases were considered. The first was that which produced the worst downward loading on the roof, and included dead load, live load, and the vertical seismic load acting downward. The vertical seismic load was developed by applying as a static load the enveloped ZPA accelerations from the seismic analysis to the mass of the structure. Included in this load combination was 40% of the enveloped ZPA acceleration in each of the two horizontal (N-S and E-W) directions. This load combination governed the design of the roof, some of the walls, and portions of the base mat. The second load case was selected because it had the greatest overturning potential. It included dead load, reduced live load, the enveloped E-W ZPA acceleration, 40% of the enveloped vertical ZPA acceleration upward, and 40% of the enveloped ZPA acceleration in the N-S direction. This load combination governed the design of portions of the base mat, crane support beams and some walls.

This finite element analysis of the building's conceptual design configuration, including the soil model and building model, is described in calculation SC-6 (Reference 46). The design of the reinforcing steel based on this finite element analysis of the building's conceptual design configuration is described in calculation SC-7 (Reference 47). In general, the reinforcing required in this design of the reinforcing steel was not excessive. Highly stressed areas were in the roof slab, in the N-S walls where the roof beams intersect the wall, in the crane support beams, in the E-W shear walls, and in the corners of the base mat.

Since this initial ANSYS finite element analysis was performed, the building layout has changed somewhat from the conceptual configuration to accommodate revised design basis ground motions (larger basemat and soil cement), increased operational efficiency (widening the cask transporter aisle and adding three doors in the west wall to enable the cask transporter to drive straight into the transfer cells), and reduced construction effort (e.g., changing the roof beam from concrete to structural steel). The ANSYS finite element analysis and design of the reinforcing steel will be revised to reflect the final design configuration of the building in accordance with the applicable design loads and codes and standards identified in Section 3.2.11.4. Some changes to the amount of reinforcing steel are anticipated, but it is expected that the results of the analysis and design will be similar to those for the conceptual design configuration for the building.

Stability and Settlement Analyses

In addition to the structural analyses described above, stability and settlement analyses of the Canister Transfer Building were also performed to confirm the adequacy of the structure and its foundation. Calculation 05996.02-G(B)-13 (Reference 48) evaluated the stability of the Canister Transfer Building and determined it is stable with respect to bearing capacity, overturning, and sliding due to static and dynamic load conditions. Calculation 05996.02-G(C)-14 (Reference 49) evaluated the soil settlements due to static load conditions and found the resulting building settlements to be uniform and small and to have little effect on the structure. Calculation 05996.02-G(B)-11 (Reference 84) evaluated the soil settlements due to dynamic load conditions and also found the resulting building settlements to be small and to have little effect on the structure. In summary, the stability and settlement analyses of the Canister Transfer Building indicate that the building is stable and will retain its structural integrity and the performance of the structure will not be adversely affected.

As part of the stability analyses, soil bearing capacity evaluations were performed for the mat founded on soils that were conservatively assigned average undrained shear strengths and effective-stress strength parameters which represent the lower bound values of those parameters for the soils in the upper ~25 to ~30 ft layer at the site. The strengths of the underlying soil layers are much greater than those at the upper 25-30 ft layer; therefore, assuming that all soils have the same strengths provides a conservative, lower-bound assessment of their stability. See Section 2.6.1.11 for a detailed discussion of the static and dynamic strengths of the soils underlying the site and Section 2.6.1.12.2 for a detailed discussion of the stability and settlement analyses of the Canister Transfer Building.

Several load cases were considered in the bearing capacity analyses, which consisted of combinations of vertical static, vertical seismic in upward and downward directions, and horizontal seismic loads in E-W and N-S directions. Loads developed in Calculation SC-5 (Reference 44) were used in these analyses. As in the structural analyses discussed earlier, seismic loads used were based on 100% of the enveloped ZPA acceleration in one direction, combined with 40% of the enveloped ZPA accelerations in each of the other two directions. Minimum factors of safety of 3.0 for the static load case and 1.1 for the seismic load cases are required against a bearing capacity failure of the foundation in soil.

Tables 2.6-9 and 2.6-10 present the results of the bearing capacity analyses of the Canister Transfer Building. Table 2.6-9 indicates that the factor of safety for the static load case is greater than 13, which exceeds the minimum required factor of safety of 3.0 by a wide margin. Table 2.6-10 presents the results of the dynamic bearing capacity analyses. It indicates that Load Case II, the load combination of full static, 100% horizontal seismic in N-S direction, 0% seismic uplift, and 100% horizontal seismic in E-W, is the most critical load case. This load case results in an actual soil bearing pressure of 2.4 kips per square foot (ksf), compared with an ultimate bearing capacity of 13.2 ksf. The resulting factor of safety against a bearing capacity failure for this load case is 5.5, compared with the minimum allowable factor of safety for seismic loading

cases of 1.1. Therefore, there is an adequate factor of safety against a bearing capacity failure due to static and dynamic loads.

Sliding Stability Analyses

The sliding stability of the Canister Transfer Building is discussed in detail in Section 2.6.1.12.2. The Canister Transfer Building will out to a distance of 10 years from the building be surrounded by approximately 5 ft of soil cement, topped by 8 inches of compacted coarse aggregate and founded on clayey soils that have an adequate amount of cohesion to resist sliding due to the dynamic forces from the design basis ground motion. A 1.5-ft deep key will be constructed around the perimeter of the mat to ensure that the full shear strength of the clayey soils is engaged to resist sliding of the structure due to loads from the design basis ground motion. As shown in Figures 2.6-21 through 2.6-23, however, some of the soils underlying the building may be cohesionless within the depth zone of about 10 to 20 ft, especially near the southern portion of the building. Analyses were performed to address the possibility that sliding may occur along a deeper slip plane at the clayey soil/sandy soil interface as a result of the earthquake forces. These analyses indicate that the factor of safety against sliding along the top of this layer is >1.1 for all Load Cases IIIA, IIIB and IIIC.

These analyses include several conservative assumptions: (1) The analyses are based on static strengths of the silty clay block under the Canister Transfer Building mat, even though experimental results indicate that the strength of cohesive soils increases as the rate of loading increases. (2) For rates of strain applicable for the cyclic loading due to the design basis ground motion, one can assume that $c_{u\ dynamic} \sim 1.5 \times c_{u\ static}$, but **$c_{u\ dynamic} = c_{u\ static}$ is conservatively used. (3) The silty sand/sandy silt layer is not continuous under the Canister Transfer Building mat, but is assumed to be continuous. (4) The analysis neglects cementation of these soils that was observed in the samples obtained in the borings. Given these conservative assumptions and the favorable results of the analyses, sliding is not expected to occur along the surface of the cohesionless soils underlying the Canister Transfer Building.**

4.7.2 Canister Transfer Cranes

The Canister Transfer Building houses two cranes, a 200 ton overhead bridge crane and a 150 ton semi-gantry crane. The cranes are provided for the purpose of loading and unloading shipping casks off or on the heavy haul tractor/trailers and transferring spent fuel canisters between the shipping cask and the storage casks. The 200 ton bridge crane can be used for both load/unload and transfer operations. The semi-gantry crane can only be used for transfer operations and provides additional crane availability because of the time requirements involved in the transfer operations.

The PFSF canister transfer cranes are designed by Ederer Incorporated. The cranes utilize a patented hoisting safety system called the X-SAM (eXtra Safety And Monitoring) system. Ederer submitted a Topical Report to the NRC for the X-SAM system (Reference 51). The bridge and semi-gantry cranes are incorporated into the Ederer Topical Report by References 52, 53, 54, and 55.

4.7.2.1 Design Specifications

The canister transfer cranes meet the requirements of the Design Criteria contained in Chapter 3, which requires the cranes be designed in accordance with ASME NOG-1 (Reference 32) and be single-failure-proof in accordance with NUREG-0554 (Reference 33).

During the detailed design stage, design requirements will be specified that provide for the performance of testing, inspection, and maintenance activities on the cranes in accordance with 10 CFR 72.122(f). Inspection and acceptance of the cranes will be performed during fabrication, in accordance with the QA Program described in Chapter 11, to ensure that the design requirements are satisfied.

The functional parameters of the overhead bridge crane are as follows:

Capacity:	Main hoist - 200 tons (Maximum Critical Load)
	Auxiliary hoist - 25 tons
Hoist type:	Main hoist - Single-failure-proof
	Auxiliary hoist - Single-failure-proof
Hoist ropes:	Main hoist - Carbon steel
	Auxiliary hoist - Carbon steel
Bridge span:	65'-0"
Length of runway:	260'-0"
Top of rail elev:	70'-6" above floor slab
Bridge/trolley:	40/25 fpm (Maximum speed)
Motion controls:	DC hoist and traverse
Operator controls:	Radio remote and pendant

The functional parameters of the semi-gantry crane are as follows:

Capacity:	Main hoist - 150 tons (Maximum Critical Load)
	Auxiliary hoist - 25 tons
Hoist type:	Main hoist - Single-failure-proof
	Auxiliary hoist - Single-failure-proof
Hoist ropes:	Main hoist - Carbon steel
	Auxiliary hoist - Carbon steel
Bridge span:	35'-0"
Length of runway:	180'-0"
Top of rail elev:	55'-9" above floor slab
Bridge/trolley:	50/30 fpm (Maximum speed)
Motion controls:	DC hoist and traverse
Operator controls:	Radio remote and pendant

4.7.2.2 Plans and Sections

The canister transfer bridge and semi-gantry cranes are shown in Figures 4.7-5 and 4.7-6 respectively.

4.7.2.3 Function

The function of the canister transfer cranes is to assist in the canister transfer operations at the PFSF. A description of the canister transfer operations is contained in Chapter 5.

The overhead bridge crane performs the following activities:

- Remove the impact limiters and personnel barrier from the shipping cask and move them to a laydown area, and
- Upright and remove the shipping cask from the rail car or heavy haul trailer and move the cask into a canister transfer cell.

The overhead bridge crane or the semi-gantry crane performs the following activities:

- Remove the lid from the shipping cask,
- Lift the transfer cask and place on top of the shipping cask, then lift the canister into the transfer cask,
- Lift the transfer cask containing the canister off the shipping cask and onto the top of the storage cask,
- Lower the canister into the storage cask, and
- Remove the transfer cask from on top of the storage cask and place the lid on top of the storage cask.

4.7.2.4 Components

The major components of the overhead bridge crane are the bridge, trolley, main hoist, and auxiliary hoist. The major components of the semi-gantry crane are the gantry frame, trolley, main hoist, and auxiliary hoist.

4.7.2.5 Design Bases and Safety Assurance

The canister transfer cranes are classified as being Important to Safety to provide the safety assurance commensurate with shipping cask and canister lifting activities. The design bases for the canister transfer cranes is described in Chapter 3. Each crane has sufficient capacity to lift the maximum lifted load the crane is designed for during transfer operations. Based on maximum weights presented by Holtec (HI-STORM SAR Tables 3.2.1 and 3.2.2, HI-STAR shipping SAR Table 7.1.1), the maximum lifted loads are addressed in the following Sections.

Since the cranes are classified as Important to Safety, they must be capable of performing their intended functions under all loading conditions including off-normal and accident conditions.

The failure of a crane during canister transfer operations is discussed in SAR Section 8.1.1.3, which shows that the cranes will not drop their loads under off-normal conditions.

The crane operations are designed not to exceed the handling loads (live loads) assumed in the HI-STORM SAR. SAR Section 8.1.4.3 assumes an off-normal handling load is generated from a 2 fps horizontal impact. The crane design parameters limit the high speed of the trolley to less than 60 fpm (1 fps).

SAR Section 8.2.1.2 shows that the cranes maintain their structural integrity and functionality under seismic conditions. However, it is not a design requirement that the crane be operable during an earthquake nor that it be operable after an earthquake. The following is mandatory:

a) The crane bridge (gantry) and trolley are provided with suitable restraints so that they do not leave their rails during an earthquake.
b) No part of the crane shall become detached and fall during an earthquake.
c) The crane load shall not lower in an uncontrolled manner during or as the result of an earthquake.

Additionally, the crane design specification requires that the crane design include the ability to manually release the hoist, emergency, bridge, gantry, and trolley brakes to allow for controlled lowering and positioning of the load in the event of an emergency.

4.7.2.5.1 Maximum Loads Applicable to the Overhead Bridge Crane

The weight of loaded shipping cask, impact limiters, cask support cradle, and personnel barrier is approximately 142 tons (HI-STAR system).

The weight of loaded shipping cask and shipping cask lifting yoke is approximately 121 tons (HI-STAR system).

THIS PAGE INTENTIONALLY LEFT BLANK

The weight of loaded concrete storage cask is approximately 178 tons (HI-STORM system).

The overhead bridge crane capacity is 200 tons, which exceeds the heaviest load of 178 tons.

4.7.2.5.2 Maximum Loads Applicable to Both Overhead Bridge Crane and Semi-Gantry Crane

The weight of transfer cask with a loaded canister and transfer cask lifting yoke is approximately 121 tons (HI-TRAC system).

The semi-gantry crane capacity is 150 tons, which exceeds the heaviest load of 121 tons.

4.7.2.5.3 Seismic Analysis

The PFSF overhead and semi-gantry cranes have been seismically analyzed in accordance with ASME NOG-1 to ensure they will remain in place and support the load during and after a seismic event. The analyses were performed for both cranes by Anatech Corporation to qualify the crane designs for the original PFSF deterministic design earthquake (0.67g horizontal, 0.69g vertical – See Section 8.2.1.1). The analysis methods, modeling, and results for the 200 ton bridge crane and 150 ton semi-gantry crane are documented in References 56 and 57 respectively. The maximum stresses were calculated for the major structural components through response spectrum analyses using the amplified response spectra at the crane rail elevation in the Canister Transfer Building. The calculated normal and shear stresses for all components were within allowables as defined in ASME NOG-1. In addition, the cranes were reviewed by Ederer for their seismic stability based on the current PFSF design basis ground motion of 0.711g horizontal and 0.695g vertical (See Section 3.2.10.1.1)

and resulting response spectra curves. The response spectra curves for this design basis ground motion are shown in Calculation 05996.02-SC-5 (Reference 44) and include the effects of properties of the soil underlying the Canister Transfer Building. The seismic accelerations in the new design basis resulted in increased accelerations in the building and therefore, modifications to both crane designs (Reference 63). However, the crane dimensions still fit within the same envelope shown on Figures 4.7-5 and 4.7-6 except that the girders will be deeper and heavier. PFS will have Ederer formally update the seismic analysis for both cranes as part of the final detailed engineering phase of the crane design and fabrication.

For the 200 ton overhead bridge crane, the vertical peak due to the design basis ground motion increased approximately 52 percent from the original deterministic design earthquake. The N-S lateral forces are governed by wheel slip and remain constant. Since the bridge girders, trolley trucks, trolley girder, and equalizing sill are designed at approximately 90 percent or more of the allowable stress (of which this margin should be maintained) the section moduli for these components will increase approximately 52 percent. The bridge trucks will also be affected by the E-W horizontal peak increase of approximately 94 percent. However, since the bridge trucks were designed at a lower allowable stress of approximately 72 percent, the section modulus only requires an increase of approximately 10 percent.

For the 150 ton semi-gantry crane, the vertical peak due to the design basis ground motion from the deterministic design earthquake increased approximately 52 percent on the west end of the crane and 8 percent on the east end of the crane. The N-S lateral forces are governed by wheel slip and remained constant. The E-W lateral peak increased approximately 94 percent on the west end and decreased approximately 4 percent on the east end. The equalizing sill, end tie, and gantry truss, which were designed well below allowable stresses and should remain unchanged. However, the bridge girder, trolley truck, and trolley girder, which were designed with less margin from the allowable stresses, will require an increase of the section moduli by approximately 30 percent. The gantry leg will require an increase to the section modulus of approximately 50 percent at the top end and will remain unchanged at the bottom. The

joints at the girder/leg interface and the girder/truck interface will increase in strength to envelop the E-W lateral loading. The bridge trucks, which were designed at approximately 75 percent of allowable stress, will require an increase to the section modulus of approximately 10 percent.

A. Analysis Method

For the analysis based on the PFSF deterministic design earthquake, the base motion was the design response spectrum given in terms of acceleration versus frequency at 4% of critical damping for 3 component directions at the building elevation supporting the crane railways. The basic assumptions for this type of analysis were that the response is linear and that it is relative to the base motion. The eigenmodes, frequencies, and modal participation factors were first extracted for the finite element model of the structural system. The peak modal response of the "generalized" variables in frequency space was calculated from the given input response spectrum (acceleration as a function of frequency and damping) and the modal participation factors. The corresponding peak physical response was then calculated for each natural frequency mode through the corresponding eigenvector. These peak physical responses for each natural mode were then combined to estimate the total peak response of the variable. Since the peak response in the different modes will not typically occur at the same time, the combination into a peak value is conservative.

The method used to combine the individual modal response was the square root of the sum of the squares (SRSS) method described in USNRC Regulatory Guide 1.92 (Reference 58) for closely spaced modes. The modes were determined to be closely spaced since the frequencies were within 10 percent of the lower value. The SRSS method was modified by adding twice the absolute value of the product of the peak modal response from each pair of modes to the sum of the squares of all the modal peak values. Finally, these peak responses were combined for the different component directions using a SRSS combination. The resulting peak values from the seismic

loads were then algebraically added to static values to compare with design allowables as specified in ASME NOG-1 for seismic qualification.

The above procedure for response spectrum analysis is fully implemented in the ABAQUS/Standard general purpose finite element program (Reference 59). The program is used extensively in the nuclear industry for this type of analyses. The program allows input of 3 orthogonal base motion response spectrums and options for summing the modal contributions and the component contributions, which are automatically calculated separately.

B. Load Cases

The cranes were analyzed with six load positions that would produce the maximum forces on the system; trolley at end of travel, trolley at ¼ span, and trolley at mid-span, with hook up and down at each position. Stresses were calculated on the main and auxiliary hoists for each of the three positions considering no load and credible critical load conditions.

For the semi-gantry crane, the trolley positions are not symmetric with respect to the midspan since the crane is supported by a wall on one end and by the gantry on the other end. The ¼ span trolley position was evaluated relative to the trolley at the end of travel in each direction to determine the trolley location that produces the maximum stress for the site specific response spectra. The three positions included trolley at wall end, trolley at mid-span, and trolley at gantry leg end.

C. Design Allowables

The allowable design criteria for the seismic qualification is established in ASME NOG-I, Section 4300.

D. Models

The finite element models used for seismic qualification of the overhead bridge crane and semi-gantry crane are illustrated in References 56 and 57 respectively. The models show the trolley at midspan along the bridge girders with the hook loaded and in the up position. Similar models are used for the other trolley positions and for hook up and down in each position. The models use 3-node Timoshenko beam elements for the structural members.

E. Properties and Mass Distribution

The response spectra analysis assumed linear response. For all structural members, an elastic modulus of 29E6 psi and Poisson's ration of 0.318 were used. The beam section properties were computed from the cross-section shapes and input directly into the computer model. The gantry leg strut bracing uses an 8 inch diameter extra strong pipe section. Truss elements were used to model the hoist rope. A lumped mass for the payload and lower block is attached to the end of the hoist rope for the main hoist and auxiliary hoist cases.

F. Response Spectra

The analysis is based on the response spectra provided in terms of acceleration versus frequency for 4% damping at elevation 100 ft and 170 ft in the Canister Transfer Building. The gantry legs are mounted on rails at elevation 100 ft and 155 ft 3 in. In the ABAQUS implementation of the response spectrum analysis technique, only one response spectra for each of 3 orthogonal directions may be input. The approach used was to include the support wall in the model and apply the 100 ft acceleration spectra at the base of the wall and at the gantry leg support.

H. Results

The maximum stresses for the various components were developed for different trolley positions and loading conditions. For all trolley positions, the maximum critical load on

the main hoist with the hook in the up position is the worst load case for both cranes. The no-load and auxiliary hoist load conditions for the overhead bridge crane typically develop stresses less than 50 percent of allowables. The no-load and auxiliary hoist load conditions for the semi-gantry crane typically develop stresses less than 60 percent of allowables except for the gantry legs, which are typically stressed to 80 percent of allowable. The maximum stresses are presented in Section 4.2 of References 56 and 57.

4.7.2.5.4 Single-Failure-Proof Analysis

The PFSF cranes hoist systems are designed in accordance with ASME NOG-1 with single failure proof features so that any credible failure of a single component will not result in the loss of capability to stop and hold the load. The Ederer X-SAM crane design includes several safety systems to ensure single-failure-proof requirements are met. These are addressed in the X-SAM Generic Topical Report (Reference 51), Section III.B, which provides the single-failure-proof analysis for the X-SAM crane design. The safety systems are limited to the hoist and brake for the trolley and bridge and comply with the guidelines in NUREG-0554 (Reference 33). The safety systems are designed to allow the cranes to safety withstand failures caused by overload, load hangup, two blocking, hoist drive train failure, drum support failure, overspeed, loss of power during a critical lift, hoist control failure, off center lifts, holding brake failure, and cable failure.

The X-SAM crane consists of three types of safety systems; the hoist integrated protective system (HIPS), conventional hoist safety system, and the balanced dual reeving system. HIPS is a series of special hoist safety systems and subsystems that have been integrated to monitor problems with the hoist, limit the amount of abuse the hoist can be subjected, protect the hoist against abnormal abuse, and report abuse for prevention. The HIPS includes the energy absorbing torque limiter (EATL), emergency drum brake system (EDBS), failure detection system, drum safety structure, wire rope protection, and emergency stop button.

The EATL is incorporated into the hoist gear case and acts as an energy absorber and torque limiter. If any off-normal condition occurs, such as two blocking, the EATL would limit the maximum load imposed on the reeving system and would dissipate rotational kinetic energy, keeping stresses at known safe levels during and after shutdown of the hoisting system. The EATL is set to slip at 130% of rated load torque, setting the emergency brake on the rope drum. The EDBS provides an independent means for reliability and safety stopping and holding the load following a failure in the hoist machinery. The failure detection system detects a loss of mechanical continuity in the hoist machinery and actuation of the EATL as well as improper rope spooling, reeving continuity, and drum overspeed. The drum safety structure ensures that a shaft or bearing failure would not allow the drum to disengage from it drive gear or EDBS. The wire rope protection is provided by the design of the hoist, which ensures that the hoist is able to withstand two blocking without mechanically damaging the wire rope. The emergency stop button, located at the control station, removes power from the crane and sets the EDBS as soon as the load begins to lower.

The second type of safety system is the conventional hoist safety system, which features safety systems that are typically installed on conventional overhead cranes. These systems include the dual upper limit switches, overload sensing and indication, load control system, and high speed holding braking. The HIPS protects against maloperation of these systems.

The third type of safety system is the balanced dual reeving system. The HIPS provides the primary protection of the reeving by preventing overloads and mechanical damage of the cables and the balanced dual reeving system provides further protection against loss of the load in the event of a cable failure. This system includes dual reeving, the hydraulic load equalization system, and the wire rope

The design margin for the wire rope system used on the PFSF cranes exceeds the requirements in the Generic Topical Report. Each wire rope system is designed with a

minimum safety factor of 10:1 of ultimate in accordance with NUREG-0612 (Reference 35), Section 5.1.6, paragraph 1(A) and ANSI N14.6 (Reference 34), Section 7.2.1.

The auxiliary hoist is also designed as single-failure-proof and has the same X-SAM features as the main hoist to prevent two blocking and to protect the crane and load from single failures.

Amendments to Ederer's General Topical Report referencing the PFSF overhead and semi-gantry cranes are documented in References 52 through 55 respectively.

4.7.2.5.5 Crane Design

The bridge crane is designed with double bridge girders spanning 65 ft supported along one end on rails 70 ft above the building floor. The bridge girders are welded plate box sections rigidly connected to box section end ties that serve as equalizing sills for the bridge trucks. The bridge trucks are rigid box structures, each enclosing two 30 inch diameter wheels, connected with pins at each end of the equalizing sill. The trolley spans 17 ft and is supported from rails mounted along the bridge girder centerlines. The trolley consists of 2 box section end trucks with 2 wheels each, which are rigidly connected at the midspan with a load girt. A deck plate across the top of the trucks and load girt is used for mounting the rope drums, hoist motors and brakes, the upper blocks, and other associated mechanical equipment. The trolley load girt is of welded plate box construction and directly supports the main hoist upper block reactions.

The semi-gantry crane is designed with double bridge girders spanning 35 ft supported along one end on rails 55 ft above the building floor and with gantry legs mounted on rails at the other end. The bridge girders are welded plate box sections rigidly connected to box section end ties, which are pinned to the bridge trucks to equalize the load to each truck at the wall supported end and rigidly connected to the gantry legs at the gantry end. The gantry legs connect to the bridge trucks at the floor through a load equalizing end tie. The gantry legs are constructed of welded plate box sections, which taper from the girder

end tie connections to the equalizing sill connections. The bridge trucks are rigid box structures, each enclosing two 30 inch diameter wheels, connected with pins at each end of the equalizing sill. The trolley spans 15 ft and is supported from rails mounted along the bridge girder centerlines. The trolley consists of 2 box section end trucks with 2 wheels each, which are rigidly connected at the midspan with a load girt. A deck plate across the top of the trucks and load girt is used for mounting the rope drums, hoist motors and brakes, the upper blocks, and other associated mechanical equipment. The trolley load girt is of welded plate box construction and directly supports the main hoist upper block reactions.

The main hoist for both cranes use a 16 part reeving configuration allowing two independent wire ropes to wind simultaneously on the hoist drum. Each rope supports the lifted load with a force of 1/16 of the payload weight. The 25 ton auxiliary hoist uses a similar 8 part reeving configuration. The bridge crane main hoist utilizes a 1 5/8 inch diameter rope and the semi-gantry crane main hoist utilizes a 1 3/8 inch diameter rope.

The crane uses a festooned cable system. The cable is fixed to the trolleys and a strain system ensures that wear through sharp cable bends and direct strain on connections is minimized.

All hooks are forged carbon steel and are designed with a 10 to 1 safety factor "sister" type with pin hole and safety latches. Each hook is mounted on a load bearing trunnion separate from the rope sheave axle and swivels freely on an antifriction thrust bearing. To ensure safe and smooth transitions when connecting or disconnecting lift beams, both cranes use main and auxiliary hooks of the same size and dimensions.

The reeving arrangements of the wire rope systems are redundant and balanced so that failure of one rope system does not cause significant lateral motion or energy at the load block.

The seismic analysis indicated no significant uplift from a seismic event on either the bridge crane or the semi-gantry crane great enough to cause cable disconnection . However, the cranes are designed with lateral restraints that consist of side bars mounted next to the crane rails. The side bars prevent any lateral movement of the bridge wheels and therefore, prevent the wheels from leaving the rails.

THIS PAGE INTENTIONALLY LEFT BLANK

4.7.3 HI-STORM Transfer Equipment

The HI-STORM transfer equipment consists of a metal transfer cask (HI-TRAC), HI-TRAC lifting trunnions, shipping cask and transfer cask lift yokes, canister downloader, canister lift cleats, and HI-STORM lifting lugs.

4.7.3.1 Design Specifications

The HI-TRAC transfer cask, trunnions, lift yokes, canister downloader, canister lift cleats, and storage cask lifting lugs are designed as special lifting devices in accordance with ANSI N14.6 (Reference 34) and NUREG-0612 (Reference 35).

4.7.3.2 Plans and Sections

The transfer cask assembly is shown in Figure 4.7-2.

4.7.3.3 Function

The function of the HI-TRAC transfer cask is to provide a shielded lifting device for carrying the canister between the HI-STAR shipping cask and the HI-STORM storage cask. The function of the lifting yokes is to provide a lifting interface between the crane and the shipping cask or transfer cask. The function of the canister lift cleats is to provide a means to lift the canister. The function of the HI-STORM storage cask lifting lugs is to provide a means to lift the storage cask.

4.7.3.4 Components

4.7.3.4.1 Transfer Cask

The HI-TRAC transfer cask is a heavy-walled cylindrical vessel. The main structural function of the transfer cask is provided by carbon steel and the main neutron and gamma shielding functions are provided by water and lead, respectively. The transfer cask is a steel, lead, steel layered cylinder with a water jacket attached to the exterior. The transfer cask provides an internal cylindrical cavity of sufficient size for housing a HI-STORM canister. The top lid has additional neutron shielding to provide neutron attenuation in the vertical direction. An access hole through the HI-TRAC top lid is provided to allow the lowering or raising of the canister between the transfer cask and shipping or storage cask. A bottom transfer lid incorporates two sliding doors that allows the opening of the HI-TRAC bottom for the canister to pass through.

Physical characteristics of the HI-TRAC transfer cask are listed in Table 4.7-1.

4.7.3.4.2 Transfer Cask Trunnions

Trunnions are located beneath the transfer cask top flange for lifting and vertical handling of the cask. The trunnions enable the HI-TRAC transfer cask to be lifted by the lifting yoke, which is connected to the crane. The trunnions are welded to the transfer cask wall. The trunnions are designed to accommodate the combined weight of the transfer cask and a fully loaded canister while meeting NUREG-0612, Section 5.1.6(3) requirements for interfacing lift points.

4.7.3.4.3 Shipping and Transfer Cask Lift Yokes

The shipping cask lift yoke is a specialty lift rig that attaches between the crane hook and the two trunnions of the HI-STAR shipping cask. The transfer cask lift yoke is a specialty lift rig that attaches between the crane hook and the two trunnions of the HI-TRAC transfer cask. The lift yokes consist of two steel hooks joined by a steel cross beam.

4.7.3.4.4 Canister Downloader

The canister downloader is a hoist unit attached to the top of the HI-TRAC transfer cask. The downloader is used to raise and lower the canister between the HI-TRAC transfer cask and the HI-STORM storage cask or HI-STAR shipping cask in a single-failure proof mode without the risk of over lifting the canister. The downloader uses a hydraulic cylinder, which extends out to the side to physically lift the canister or retracts to lower the canister.

4.7.3.4.5 Canister Lift Cleats

The canister lift cleats consists of two steel lifting attachments that are bolted onto the top of the canister. The cleats provide lifting points for the downloader hoist hook in order to lift the canister up and out of either the HI-STAR shipping cask or HI-STORM storage cask and into the HI-TRAC transfer cask.

4.7.3.4.6 HI-STORM Storage Cask Lifting Lugs

The HI-STORM storage cask is equipped with four removable lifting lugs arranged circumferentially around the cask. The lifting lugs are threaded into anchor blocks. The anchor blocks are integrally welded to the cask radial plates, which are welded to the

cask inner shell, outer shell, and baseplate. The four lugs provide for direct attachment of traditional hook or ring lifting devises, which along with a specially-designed lift rig, allow lifting by the cask transporter or crane hook. The lift rig is designed to lift a fully-loaded storage cask with margins of safety specified in ANSI N14.6, if the vertical lift height is to exceed the vertical lift height requirements.

4.7.3.5 Design Bases and Safety Assurance

4.7.3.5.1 Structural Design

A. Dead and Live Loads

The HI-TRAC transfer cask with the transfer lid attached, is designed to meet Level A Subsection NF stress limits while handling the dead load of the heaviest loaded canister. The structural analysis for the HI-TRAC transfer cask is described in several appendices to Chapter 3 of the HI-STORM SAR.

The transfer cask lifting trunnions are designed for a conservative total lifting load of 245,000 lb using a two point lift with a minimum safety factor of 10 based on the ultimate strength. During a lift no point in the HI-TRAC body exceeds its material yield strength. The structural analysis for the HI-TRAC transfer cask trunnions is described in the HI-STORM SAR Appendix 3.E.

The shipping cask and transfer cask lift yokes are designed as a non-redundant lifting devices with a factor of safety of ten or greater on material ultimate strength and six or greater on yield and includes the dynamic load increase factor of 10 percent. The lift yokes therefore meet the NUREG-0612 requirements for single-failure-proof devices.

The canister downloader is designed as a single-failure-proof lifting device in accordance with NUREG-0612. The downloader consists of a hydraulic ram that is a non-redundant lifting device designed with the safety factors of 10 on ultimate and 6 on yield. The downloader uses two redundant sets of anti-drop cam locks to secure the load in the event of a loss of power or hydraulic pressure.

The two canister lift cleats are designed with a minimum factor of safety of three on material yield strength and five on material ultimate strength, as well as a dynamic load increase factor of 10 percent. Each cleat can totally support the weight of the canister thereby making them single-failure-proof per NUREG-0612. The cleats are connected to the canister via 4 bolts, 2 bolts per cleat.

The HI-STORM storage cask is designed to be lifted using four lifting lugs (threaded eyebolts) located on top of the cask. The lifting lugs screw into steel lifting blocks that are integrally welded to the storage cask steel. The stresses were compared with ASME III, NF allowables. The thread shear in the lifting block is compared to 10 percent of the ultimate strength of the base material in accordance with NUREG-0612. The lifting lugs have a net section stress below 10 percent of the ultimate strength of the lug material. The strength qualification analysis is described in HI-STORM SAR Appendix 3.D. No credit is assumed for the concrete except as a vehicle to transfer compressive loads. A dynamic load factor of 1.15 is applied to simulate anticipated inertia forces during a low speed lift.

B. Thermal Loads

Thermal loads induced on the HI-TRAC transfer cask are identified in HI-STORM SAR Section 3.4.4.2. The analysis was performed to demonstrate that the annulus between the inner walls of the transfer cask and the exterior of the canister would not close due to unconstrained thermal expansion of each assembly. The analysis results are shown

in HI-STORM SAR Table 4.5.4. The table shows a summary of temperature differences in the basket periphery and canister shell between the top and bottom of the canister. The temperature gradients were evaluated to determine the cask and canister thermal growths and shown to be minimal. The temperature gradients were also used to calculate thermal stresses in the canister, which were shown to be within code allowables and therefore meet the PFSF design criteria in Section 3.2.6 for thermal loads.

C. Tornado Winds and Missiles

Evaluation of the transfer cask for tornado wind or missile is not required since the canister transfer operations are conducted within the Canister Transfer Building.

D. Earthquake

The transfer cask has been evaluated for stability during the PFSF design basis ground motion (0.711g horizontal, 0.695g vertical – See Section 3.2.10.1.1) when in the stacked cask arrangement. The stacked cask arrangement occurs when the transfer cask is resting on top of the storage cask. It was concluded that during transfer operations, it is necessary to ensure the transfer cask is supported throughout the transfer operation either by connection to the crane, or by seismic support struts whenever the transfer cask is disconnected from the crane, to prevent the cask from toppling during a seismic event. Therefore, facility procedures will ensure that the HI-TRAC transfer cask be secured to building columns with support struts (Section 4.7.1.4.1) when in the stacked cask arrangement whenever the transfer cask is disconnected from the crane to preclude a cask toppling accident.

E. Fire

Fires concerning the HI-TRAC transfer cask are addressed in HI-STORM SAR Section 11.2.4.2.2. The HI-TRAC was analyzed for a fire around the cask of 50 gallons of

combustible fuel. The fire had a duration of 4.775 minutes. A bounding cask temperature rise of 9.332° F per minute was determined from the combined heat inputs to the transfer cask, which include radiant and convection heating from the fire and the conservatively bounding design basis decay heat load (22.25 KW) from the fuel. Using these heat inputs, Holtec's analysis determined that the fuel cladding would not exceed the short-term fuel cladding temperature limit (HI-STORM SAR Table 11.2.5). As shown in Section 8.2.5, the only fuel source near a HI-TRAC transfer cask at the PFSF would be diesel fuel from the cask transporter, whose fuel tanks have a capacity of 50 gallons, which would fuel a fire for a duration of less than 5 minutes, as analyzed. In addition, it is anticipated that any fires would be put out by personnel using the Canister Transfer Building standpipe/hose system.

The elevated temperatures from a fire could cause the pressure in the transfer cask water jacket to increase and cause the overpressure relief valve to vent steam to the atmosphere. Holtec's analysis of this event determined that less than 20% of the water in the water jacket could be boiled off. However, this would not have any adverse effects on systems classified as important to safety. As stated in Section 8.2.5.2, administrative procedures require that the shield doors remain closed during canister transfer operations, to physically prevent entry of the cask transporter into a transfer cell when the canister is not in either the shipping cask or the storage cask. This assures that a loaded transfer cask will not be exposed to a fire involving the cask transporter. The HI-TRAC design and building provisions meet the PFSF design criteria in Section 3.2.6 for accident-level thermal loads in accordance with 10 CFR 72.122(c).

4.7.3.5.2 Thermal Design

The thermal analysis for the HI-TRAC transfer cask is described in HI-STORM SAR Section 4.5.1. The analysis uses the same approach as the HI-STORM storage cask/canister thermal analysis (Section 4.2.1.5.2) and was performed using the ANSYS and FLUENT computer codes.

Heat generated in the fuel assemblies is transported to the shell of the canister, in the manner described in Section 4.5.1.1 of the HI-STORM SAR. From the outer surface of the canister, heat is transported across a total of six concentric layers, representing the air gap, the HI-TRAC inner steel shell, the lead shielding, the outer steel shell, the water jacket, and the enclosure shell from which heat is rejected to atmosphere. Heat is transferred across the air gap between the canister and the transfer cask by parallel mechanisms of conduction and radiation. Heat is transported through the cylindrical wall of the transfer cask by conduction through successive layers of steel, lead, and steel. Conduction through the water jacket occurs through both the water cavities and the steel channels.

A bounding steady-state analysis of the HI-TRAC transfer cask was performed using the least favorable canister basket thermal conductivity, the conservatively bounding design basis decay heat load (22.25 kW), and assuming solar radiation. Maximum fuel cladding temperatures and temperatures in different parts of the transfer cask and canister are summarized in Table 4.7-2. Temperatures of all components are shown to be within allowable temperature limits.

The minimum ambient temperature condition required to be considered for the HI-TRAC design is specified as 0° F. Provided an antifreeze is added to the water in the transfer cask jacket, all HI-TRAC materials will satisfactorily perform their intended functions at the 0° F minimum postulated temperature condition. The minimum design temperature for the Canister Transfer Building is 40° F. Movement of the transfer cask at temperatures above 40° F eliminates the potential for approaching the minimum HI-TRAC design condition.

4.7.3.5.3 Shielding Design

The transfer cask provides shielding of the canister during transfer operations. Radial shielding is provided by steel shells that enclose a lead gamma shield with radial neutron shielding provided by a water jacket, comprised of water-filled steel channels on the outside of the transfer cask. The transfer lid at the bottom of the cask, and top lid, both consist of a lead gamma shield and a solid neutron shield material sandwiched between steel liners. Results of the dose rate analysis and determination of the dose rates at the bottom, sides, and top of the loaded HI-TRAC transfer cask are shown in HI-STORM SAR Section 5.1 and summarized in Table 7.3-3. Chapter 7 discusses the shielding analysis.

Temporary shielding will be provided as needed during the transfer operation as well as measures implemented to maintain ALARA doses. Doses will be maintained within occupational dose limits required in 10 CFR 20 in accordance with Section 3.3.5.2 for shielding.

4.7.4 (deleted)

4.7.5 Cask Transporter

A cask transporter is used to move the loaded storage cask between the Canister Transfer Building and the storage pad.

4.7.5.1 Design Specifications

The cask transporter is a commercial grade system that has no specific code or specification criteria.

4.7.5.2 Plans and Sections

A drawing of a typical cask transporter is shown on Figure 4.7-4.

4.7.5.3 Function

The function of the cask transporter is to enable transfer of the loaded storage casks between the canister transfer facility and the concrete storage pads.

4.7.5.4 Components

The cask transporter is a large tracked vehicle designed to straddle a storage cask and lift it for transport between the Canister Transfer Building and the storage pads. The transporter lifting mechanism consists of a lift beam supported on either end by two hydraulic lift rams. The lift beam is designed with lift connections to attach to the lifting eyes in the storage cask. The transporter is controlled by a driver who is located on the back corner of the vehicle. The braking system is designed to automatically set when the vehicle operating levers are in neutral or the parking brake is set.

The transporter travels up to 2 mph, has a capacity of 200 tons, and weighs approximately 135,000 lb (Reference 21).

4.7.5.5 Design Bases and Safety Assurance

The cask transporter is classified as not Important to Safety. A failure of any cask transporter components will not result in any safety concerns since the cask would only lower 4 inches back to the ground. Drops this small are within analyzed accident conditions presented in Section 8.2.6. The transporter is designed to mechanically limit the lifting height of a cask to a maximum of 9 inches. The hydraulic lift cylinders are equipped with double locking valves and a cam locking system engages and holds the load in the event a cylinder looses holding power. Indicator lights on the operating console tell if the cams are disengaged or engaged. Markings on the lift boom and a meter on the operating console give indication of the lifted height.

THIS PAGE INTENTIONALLY LEFT BLANK

4.8 REFERENCES

1. Final Safety Analysis Report for the Holtec International Storage and Transfer Operation Reinforced Module Cask System (HI-STORM 100 Cask System), Holtec Report HI-2002444, NRC Docket No. 72-1014, Revision 0, July 2000.

2. (deleted)

3. Topical Safety Analysis Report for the Holtec International Storage, Transport, and Repository Cask System (HI-STAR 100 Cask System), Holtec Report HI-951251, Docket 71-9261, Revision 9, April 2000.

4. Regulatory Guide 1.76, Design Basis Tornado for Nuclear Power Plants, U.S. Nuclear Regulatory Commission, April 1974.

5. NUREG-0800, Standard Review Plan for the Review of Safety Analysis Reports for Nuclear Power Plants, U.S. Nuclear Regulatory Commission, July 1989.

6. Regulatory Guide 1.60, Design Response Spectra for Seismic Design of Nuclear Power Plants, U.S. Nuclear Regulatory Commission, Revision 1, December 1973.

7. (deleted)

8. Scoping Seismic Analyses of HI-STORM on a Western Area ISFSI, Holtec International, Holtec Report HI-961574, Revision 0.

9. Regulatory Guide 1.91, Evaluations of Explosions Postulated to Occur on Transportation Routes near Nuclear Power Plants, U.S. Nuclear Regulatory Commission, February 1978.

10. ANSYS Revision 4.48, Swanson Analysis Systems, Inc.

11. ASME Boiler and Pressure Vessel Code, Section III, Rules for Construction of Nuclear Power Plant Components, American Society of Mechanical Engineers, 1992.

12. EPRI NP-7551, Structural Design of Concrete Storage Pads of Spent Fuel Casks, Electric Power Research Institute, 1991.

13. (deleted)

14. ANSI/ANS 57.9, Design Criteria For An Independent Spent Fuel Storage Installation (Dry Storage Type), American Nuclear Society, 1984.

15. ACI-349, Code Requirements for Nuclear Safety Related Concrete Structures, American Concrete Institute, 1990.

16. International Civil Engineering Consultants, Inc., Storage Pad Analysis and Design, Calculation No. 05996.02-G(PO 17) - 2, Revision 3.

17. CECSAP Computer Program, Version 1.0, International Civil Engineering Consultants, Inc., October 1996.

18. SASSI Computer Program for IBM/RS-6000 Workstation, Version 1.2, International Civil Engineering Consultants, Inc., March 1997.

19. Development of Soil and foundation Parameters in Support of Dynamic Soil-Structure Interaction Analysis, Calculation No. 05996.01 G(P05)-1, Geomatrix Consultants, Inc., March 31, 1997.

20. ASCE-4, Seismic Analysis of Safety-Related Nuclear Structures and Commentary on Standard for Seismic Analysis of Safety-Related Nuclear Structures, American Society of Civil Engineers, 1986.

21. J & R Engineering Company Inc., Cask Transporter Catalog Data.

22. (deleted)

23. 10 CFR 73.51, Requirements for the Physical Protection of Stored Spent Fuel or High - Level Radioactive Waste, (Proposed).

24. (deleted)

25. Uniform Building Code, International Conference of Building Officials, 1994 edition.

26. NFPA 13, Standard for the Installation of Sprinkler Systems, National Fire Protection Association, 1996.

27. (deleted)

28. NFPA 20, Standard for the Installation of Centrifugal Fire Pumps, National Fire Protection Association, 1996.

29. NFPA 22, Standard for Water Tanks for Private Fire Protection, National Fire Protection Association, 1996.

30. NFPA 10, Standard for Portable Fire Extinguishers, National Fire Protection Association, 1994.

31. ASCE-7, Minimum Design Loads for Buildings and Other Structures, American Society of Civil Engineers, 1995.

32. ASME NOG-1, Rules for Construction of Overhead and Gantry Cranes (Top Running Bridge, Multiple Bridge), 1989.

33. NUREG-0554, Single-Failure-Proof Cranes for Nuclear Power Plants, U.S. Nuclear Regulatory Commission, 1979.

34 ANSI N14.6, Radioactive Materials - Special Lifting Devices for Shipping Containers, 1993.

35. NUREG-0612, Control of Heavy Loads at Nuclear Power Plants, U.S. Nuclear Regulatory Commission, July 1980.

36. Silva, W.J., and Lee, K., 1987, WES RASCAL code for synthesizing earthquake ground motions: State-of-the-art for assessing earthquake hazards in the United States: U.S. Army Waterways Experiment Station, Report 24, Miscellaneous Paper S-73-1, 120 p.

37. Lilhanand, K., and Tseng, W.S, 1988, Development and Application of Realistic Earthquake Time Histories Compatible with Multiple-Damping Response Spectra: Ninth World Conference on Earthquake Engineering, Tokyo, Japan, v. II, 819-824.

38. (deleted)

39. PFSF Calculation No. 05996.02-G(PO18)-3, Geomatrix Consultants, Inc., Development of Time Histories for 2,000-Year Return Period Design Spectra, (Rev 1), March 2001.

40. PFSF Calculation No. 05996.02-G(PO18)-2, Soil and Foundation Parameters for Dynamic Soil-Structure Interaction Analyses, 2,000-Year Return Period Design Ground Motion, Revision 1, Stone & Webster.

41. REFUND, Stone & Webster computer program, ST-232, Ver-0, Level 1.

42. PFSF Calculation No. 05996.02 SC-4, Development of Soil Impedance Functions for Canister Transfer Building, Revision 2, Stone & Webster, March 2001.

43. FRIDAY, Stone & Webster computer program, ST-243, Ver-02, Level 01.

44. PFSF Calculation No. 05996.02 SC-5, Seismic Analysis of Canister Transfer Building, Revision 2, Stone & Webster.

45. ANSYS computer program, Version 5.4, Swanson Analysis Systems, Inc.

46. PFSF Calculation No. 05996.02 SC-6, Finite Element Analysis of Canister Transfer Building, Revision 0, Stone & Webster.

47. PFSF Calculation No. 05996.02 SC-7, Design of Reinforcing Steel for Canister Transfer Building, Revision 0, Stone & Webster.

48. PFSF Calculation No. 05996.02 G(B)-13, Stability Analyses of the Canister Transfer Building, Revision 6, Stone & Webster.

49. PFSF Calculation No. 05996.02 G(C)-14, Static Settlement of the Canister Transfer Building Supported on a Mat Foundation, Revision 1, Stone & Webster.

50. (deleted)

51. Generic Licensing Topical Report for Ederer's Nuclear Safety Related eXtra Safety And Monitoring (X-SAM) Cranes, EDR-1(NP)-A, Ederer Incorporated, Revision 3, October 1982.

52. Appendix B Supplement to Generic Licensing Topical Report EDR-1, Summary of Facility Specific Crane Data Supplied by Ederer Incorporated for PFSF, 200/25 Ton Bridge Crane, Revision 0, November 1998.

53. Appendix C Supplement to Generic Licensing Topical Report EDR-1, Summary of Regulatory Positions to be Addressed by Applicant for PFSF, 200/25 Ton Bridge Crane, Revision 0, November 1998.

54. Appendix B Supplement to Generic Licensing Topical Report EDR-1, Summary of Facility Specific Crane Data Supplied by Ederer Incorporated for PFSF, 150/25 Ton Semi-gantry Crane, Revision 0, November 1998.

55. Appendix C Supplement to Generic Licensing Topical Report EDR-1, Summary of Regulatory Positions to be Addressed by Applicant for PFSF, 150/25 Ton Semi-gantry Crane, Revision 0, November 1998.

56. Seismic Qualification Analysis 200 Ton Bridge Crane, PFSF, No. ANA-QA-147, Anatech Corporation, Revision 0, November 1998.

57. Seismic Qualification Analysis 150 Ton Semi-gantry Crane, PFSF, No. ANA-QA-148, Anatech Corporation, Revision 0, November 1998.

58. Regulatory Guide 1.92, Combining Modal Responses and Spatial Components in Seismic Response Analysis, Revision 1, February 1976.

59. ABAQUS/Standard, Version 5.7, User Manual, Example Problem Manual, and Theory Manual, Hibbitt, Karlsson, & Sorensen, Inc., Pawtucket, RI, 1997.

60. Holtec Report HI-992134, HI-STORM Thermal Analysis for PFS RAI, Rev. 1, dated September 9, 1999.

61. Holtec Report No. HI-2012640, Multi-Cask Response at the PFS ISFSI, From 2000 Year Seismic Event (Rev. 2), August 2001.

62. PFSF Calculation No. 05996.02 SC-10, Seismic Restraints for Spent Fuel Handling Casks, Revision 1, Stone & Webster.

63. Ederer Incorporated letter from S. Hertel to W. Lewis of Stone & Webster, Impacts of the Revised Seismic Accelerations on the Cranes for the Skull Valley Project, Document No. F2621L0045H, dated March 23, 2001.

64. (deleted)

65. NFPA 16, Standard for the Installation of Deluge Foam-Water and Foam-Water Spray Systems, National Fire Protection Association, 1995.

66. NFPA 101, Code for Safety to Life from Fire in Buildings and Structures, National Fire Protection Association, 1997.

67. NFPA 70, National Electric Code, 1996.

68. IEEE 692, Criteria for Security Systems for Nuclear Power Generating Stations, 1986.

69. 10 CFR 73.50, Requirements for Physical Protection of Licensed Activities.

70. ASME B31.1, Power Piping, 1998.

71. Stone & Webster Engineering Corporation (SWEC), Calculation No. 05996.02-G(B)-5, Revision 2, Document Bases for Geotechnical Parameters Provided in Geotechnical Design Criteria.

72. NFPA-801, Standard for Fire Protection for facilities Hanlding Radioactive Materials, 1998.

73. NFPA-220, Standard on Types of Building Construction, 1995.

74. NUREG-0908, Acceptance Criteria for the Evaluation of Nuclear Power Reactor Security Plans, 1982.

75. NUREG/CR-0509, Emergency Power Supplies for Physical Security Systems, November 1979.

76. NFPA-37, Standard Installation and Use of Stationary Combustion Engines and Gas Turbines, 1998.

77. NFPA-25, Standard for the Inspection, Testing, and Maintenance of Water-Based Fire Protection Systems, 1998.

78. NFPA-72, National Fire Alarm Code, 1996.

79. 10 CFR 72 Certificate of Compliance 1014, Rev. 0, HI-STORM 100 System, May, 2000.

80. 10 CFR 71 Certificate of Compliance 9261, Rev. 0, HI-STAR 100 System, March, 1999.

81. (deleted)

82. NFPA 14, Standard for the Installation of Standpipe and Hose Systems, 1996.

83. NFPA 24, Standard for the Installation of Private Fire Service Mains and Their Appurtenances, 1995.

84. PFSF Calculation No. 05996.02 G(B)-11, Dynamic Settlements of the Soils Underlying the Site, Revision 3, Stone & Webster.

85. Holtec Report HI-2002413, "Additional Thermal Evaluation of the HI-STORM 100 System for Deployment at Skull Valley", Revision 1, March, 2001.

86. PFS letter, Donnell to U.S. NRC, PFSF Site-Specific HI-STORM Evaluation, dated May 31, 2001.

87. Holtec Report No. 2012653, PFSF Site-Specific HI-STORM Drop/Tipover Analyses, Revision 2, October 2001.

88. PFSF Calculation No. 05996.02-SC-14, Design of Rolling Doors at Canister Transfer Cells, Revision 0, Stone & Webster.

89. PFSF Calculation No. 05996.02-G(B)-3, Estimated Static Settlement of Storage Pads, Revision 3, Stone & Webster.

90. PFSF Calculation No. 05996.02-G(B)-21, Supplement to Estimated Static Settlement of Cask Storage Pads, Revision 0, Stone & Webster.

91. PFSF Calculation No. 05996.02-UR(D)-16, Dose Rate and Shielding Assessment for the Canister Transfer Cells of the Canister Transfer Building, Revision 1, Stone & Webster.

92. PFSF Calculation No. 05996.02-SC-12, Design of Canister Transfer Building Upper and Lower Roof Steel, Revision 0, Stone & Webster.

93. ASTM E119, Standard Test Methods for Fire Tests of Building Construction and Materials, 2000.

94. PFSF Calculation No. 05996.02-P-006, Plume and Upper Layer Temperatures in Canister Transfer Building Fire Scenarios, Revision 0, Risk Technologies.

95. Updated Structural Evaluation of An F16 Aircraft Impact on Hi-Storm Overpacks at the PFS Facility for Private Fuel Storage. Holtec report No: HI-2033134 (Rev. 2) (2004).

THIS PAGE INTENTIONALLY LEFT BLANK

TABLE 4.1-1
(Sheet 1 of 7)

PFSF COMPLIANCE WITH GENERAL DESIGN CRITERIA (10 CFR 72, SUBPART F)

10 CFR 72 REQUIREMENT	REQUIREMENT SUMMARY	SAR SECTION WHERE COMPLIANCE IS DEMONSTRATED
72.122 (a) Quality standards	Structures, systems, and components Important to Safety must be designed, fabricated, erected, and tested to quality standards commensurate with the importance to safety of the function.	• Section 3.4 provides the QA classifications for SSCs Important to Safety. • Chapter 4 describes the design of SSCs Important to Safety. • Section 9.2.2 describes the Preoperational Test Plan • Section 9.4.1.1.5 describes the QA procedures req'mts. • Chapter 11 shows that the QA Program is in accordance with 10 CFR 72.140.
72.122 (b) Protection against environmental conditions and natural phenomena	Structures, systems, and components Important to Safety must be designed to accommodate the effects of and be compatible with site characteristics and environmental conditions and to withstand postulated accidents.	• Sections 3.2 and 3.2.10.2.11 provide req'mts for environmental and site design criteria for SSCs Important to Safety. • Sections 4.2 and 4.7 describe the design to mitigate environmental effects. • Chapter 8 and Sections 8.2.1.1, 8.2.1.2, and 8.2.2.2 demonstrate the capability of SSCs Important to Safety to withstand postulated accidents.
72.122 (c) Protection against fires and explosions	Structures, systems, and components Important to Safety must be designed and located so that they can continue to perform their safety functions under credible fire and explosion exposure conditions.	• Section 3.3.6 provides fire and explosion protection req'mts. • Sections 4.2.1.5.1 (I) and (J) and 4.7.3.5.1(E) describe the design that provides fire and explosion protection. • Sections 8.2.4.2 and 8.2.5.2 show the capability of SSCs Important to Safety to withstand postulated fire and explosion accidents.
72.122 (d)	Structures, systems, and components	• Section 1.2 verifies that the PFSF does not share SSCs with other

TABLE 4.1-1
(Sheet 2 of 7)

PFSF COMPLIANCE WITH GENERAL DESIGN CRITERIA (10 CFR 72, SUBPART F)

10 CFR 72 REQUIREMENT	REQUIREMENT SUMMARY	SAR SECTION WHERE COMPLIANCE IS DEMONSTRATED
Sharing of structures, systems, and components	Important to Safety must not be shared between the PFSF and other facilities unless it is shown that such sharing will not impair the capability of either facility to perform its safety functions.	facilities.
72.122 (e) Proximity of sites	An ISFSI located near other nuclear facilities must be designed and operated to ensure that the cumulative effects of their combined operations will not constitute an unreasonable risk to the health and safety of the public.	• Section 7.6.2 verifies that no other nuclear facilities are located within 5 miles of the PFSF.
72.122 (f) Testing and maintenance of systems and components	Systems and components that are Important to Safety must be designed to permit inspection, maintenance, and testing.	• Sections 4.2, 4.7, 5.1.4.7, 4.7.2.1, and 5.1.6.5 describe the capability of SSC's to permit inspection, maintenance, and testing.

TABLE 4.1-1
(Sheet 3 of 7)

PFSF COMPLIANCE WITH GENERAL DESIGN CRITERIA (10 CFR 72, SUBPART F)

10 CFR 72 REQUIREMENT	REQUIREMENT SUMMARY	SAR SECTION WHERE COMPLIANCE IS DEMONSTRATED
72.122 (g) Emergency capability	Structures, systems, and components Important to Safety must be designed for emergencies. The design must provide accessibility to the equipment by onsite and available offsite emergency facilities and services.	• Section 4.1.2 specifies that the PFSF is designed for accessibility. • Section 9.5 summarizes the Emergency Plan for the PFSF.
72.122 (h) Confinement barriers and systems	The spent fuel cladding must be protected during storage against degradation that leads to gross ruptures or the fuel must be otherwise confined. Ventilation systems must be provided to ensure confinement of airborne particulate. Storage confinement systems must have the capability for continuous monitoring to maintain safe storage conditions.	• Section 3.3.2 provides the requirements to ensure confinement of the spent fuel. • Section 4.2.1.5.5 describes the confinement design features. • Section 8.2.7.2 accident analysis shows that there is no loss of confinement. • Section 8.2.10.1 shows that the fuel cladding is protected. • Sections 7.3.4 and 7.3.5 describe the continuous monitoring process.
72.122 (i) Instrumentation and control systems	Instrumentation and control systems must be provided to monitor systems that are Important to Safety over anticipated ranges for normal operation and off-normal operation.	• Section 3.3.3.2 provides the requirements to monitor systems Important to Safety. • Section 5.4.1 describes the instrumentation and control systems.

TABLE 4.1-1
(Sheet 4 of 7)

PFSF COMPLIANCE WITH GENERAL DESIGN CRITERIA (10 CFR 72, SUBPART F)

10 CFR 72 REQUIREMENT	REQUIREMENT SUMMARY	SAR SECTION WHERE COMPLIANCE IS DEMONSTRATED
72.122 (j) Control room or control area	A control room or control area, if appropriate, must be designed to permit occupancy and actions to be taken to monitor the PFSF safely under normal conditions, and to provide safe control of the PFSF under off-normal or accident conditions.	• Section 5.5 shows that a control room/area is not required. • Section 5.1 describes the operational systems that ensure safe conditions during cask storage and canister transfer. • Section 10.2.5 defines the operational controls and limits to be used for the PFSF.
72.122 (k) Utility or other services	Each utility service system must be designed to meet emergency conditions. The design of utility services and distribution systems that are Important to Safety must include redundant systems to maintain the ability to perform safety functions assuming a single failure.	• Section 4.1.2.3 verifies that the PFSF does not rely on utility systems to ensure the safe operation of the facility.
72.122 (l) Retrievability	Storage systems must be designed to allow ready retrieval of spent fuel for further processing or disposal.	• Section 3.3.7 provides the requirements for transferring and storing the canisters that contain the spent fuel and for shipping the canisters offsite. • Section 4.7 describes the capability for retrieving the spent fuel canisters.

TABLE 4.1-1
(Sheet 5 of 7)

PFSF COMPLIANCE WITH GENERAL DESIGN CRITERIA (10 CFR 72, SUBPART F)

10 CFR 72 REQUIREMENT	REQUIREMENT SUMMARY	SAR SECTION WHERE COMPLIANCE IS DEMONSTRATED
72.124 (a) Design for criticality safety	Spent fuel handling, packaging, transfer, and storage systems must be designed to be maintained subcritical.	• Section 3.3.4 provides the requirements to ensure subcriticality is maintained. • Section 4.2.1.5.4 describes the criticality safety design.
72.124 (b) Methods of criticality control	When practicable, the design of an ISFSI must be based on favorable geometry, permanently fixed neutron absorbing materials (poisons), or both.	• Section 3.3.4 provides the requirements for the means of subcriticality control. • Section 4.2.1.5.4 describes the components that maintain subcritical conditions.
72.124 (c) Criticality monitoring	A criticality monitoring system shall be maintained in each area where special nuclear material is handled, used, or stored which will energize clearly audible alarm signals if accidental criticality occurs.	• Section 4.2.1.5.4 describes why criticality monitoring is not applicable for dry storage systems where the spent fuel is packaged in its stored configuration.
72.126 (a) Exposure control	Radiation protection systems must be provided for all areas and operations where onsite personnel may be exposed to radiation or airborne radioactive materials.	• Section 3.3.5 provides the radiological protection design criteria. • Section 4.2.1.5.3 describes the components that provide shielding for exposure control. • Sections 7.1.1 and 7.1.2 describe the program features for ensuring that occupational exposures are ALARA.

TABLE 4.1-1
(Sheet 6 of 7)

PFSF COMPLIANCE WITH GENERAL DESIGN CRITERIA (10 CFR 72, SUBPART F)

10 CFR 72 REQUIREMENT	REQUIREMENT SUMMARY	SAR SECTION WHERE COMPLIANCE IS DEMONSTRATED
72.126 (b) Radiological alarm systems	Radiological alarm systems must be provided in accessible work areas as appropriate to warn operating personnel of radiation and airborne radioactive material concentrations above a given setpoint and of concentrations of radioactive material in effluents above control limits.	• Section 3.3.5 provides the requirements for radiological alarm systems. • Section 7.3.5 describes the radiological monitoring program.
72.126 (c) Effluent and direct radiation monitoring	As appropriate for the handling and storage system, a means to measure effluents must be provided. Areas containing radioactive materials must be provided with systems for measuring the direct radiation levels in and around these areas.	• Section 3.3.5 provides the requirements for effluent and direct radiological systems. • Sections 7.3.5 and 7.6.1 describe the radiological monitoring program.
72.126 (d) Effluent control	The ISFSI must be designed to provide means to limit to ALARA levels the release of radioactive materials in effluents during normal operations and control the release of radioactive materials under accident conditions.	• Section 7.1.2 describes why effuent control is not applicable at the PFSF. • Section 8.2 demonstrates that offsite exposures for postulated accident conditions are controlled such that the dose limits specified in 10 CFR 72.106 are met.

TABLE 4.1-1
(Sheet 7 of 7)

PFSF COMPLIANCE WITH GENERAL DESIGN CRITERIA (10 CFR 72, SUBPART F)

10 CFR 72 REQUIREMENT	REQUIREMENT SUMMARY	SAR SECTION WHERE COMPLIANCE IS DEMONSTRATED
72.128 (a) Spent fuel storage and handling systems	Spent fuel storage and other systems that might contain or handle radioactive materials associated with spent fuel must be designed to ensure adequate safety under normal and accident conditions.	• Section 3.3.7 provides the requirements for ensuring the safe design of the spent fuel storage and handling systems. • Sections 4.2 and 4.7 describe the design features of the storage and handling systems to provide adequate shielding, confinement, and heat removal capability. • Section 10.2.3 addresses the surveillance specifications for testing and monitoring some components Important to Safely.
72.128 (b) Waste treatment	Radioactive waste treatment facilities must be provided.	• Section 3.3.7 addresses radioactive waste provisions. • Chapter 6 addresses the generation of radioactive wastes.
72.130 Criteria for decommissioning	The ISFSI must be designed for decommissioning.	• Section 3.5 provides the requirements for decommissioning the site. • Section 9.6.3 describes the design considerations to facilitate decommissioning. • Decommissioning Plan (License Application, Appendix B) presents an overall description of the decommissioning requirements.

TABLE 4.2-1

PHYSICAL CHARACTERISTICS OF THE HI-STORM CANISTER

PARAMETER	VALUE
Outside Diameter	68.38 inches
Length, maximum	190.5 inches
Capacity	24 PWR assemblies 68 BWR assemblies
Maximum Heat Load	20.88 kW for PWR canister (MPC-24) 21.52 kW for BWR canister (MPC-68)
Material of Construction	Stainless steel
Weight, maximum (loaded with spent fuel)	79,987 lb (MPC-24) 87,241 lb (MPC-68)
Internal Atmosphere	Helium

TABLE 4.2-2

PHYSICAL CHARACTERISTICS OF THE HI-STORM STORAGE CASK

PARAMETER	VALUE
Height	239.5 inches
Outside Diameter	132.5 inches
Capacity	1 loaded canister
Max. Radiation Dose Rate[1] 1 meter from surface: Side Top On contact with surface: Side Top Top vents Bottom vents	 17 mrem/hr 2 mrem/hr 35 mrem/hr 5 mrem/hr 9 mrem/hr 15 mrem/hr
Material of Construction	Concrete (core and lid) Steel (liner and shell)
Weight, maximum	268,334 lb (empty) 348,321 lb (with loaded MPC-24) 355,575 lb (with loaded MPC-68)
Service Life	>100 years

1. Dose rate is based on HI-STORM design basis zircaloy clad fuel for normal conditions.

TABLE 4.2-3

HI-STORM STORAGE SYSTEM STEADY STATE TEMPERATURE EVALUATION UNDER NORMAL CONDITIONS OF STORAGE

COMPONENT	MPC-24 TEMPERATURE (°F)	MPC-68 TEMPERATURE (°F)	NORMAL CONDITION TEMPERATURE LIMITS (°F)
Ambient Air	80	80	N.A.
Storage Cask Outer Shell	131	131	200 *
Air Outlet	179	185	N.A.
Storage Cask Inner Liner	166	171	200 *
Canister Shell	295	301	450
Basket	657	722	725
Fuel Cladding	692	742	**

* 200°F is Holtec's normal condition temperature limit on the concrete. The storage cask steel structure has a normal condition limit of 350°F (HI-STORM SAR Table 2.2.3).

** The temperature limits in accordance with DCCG (gross rupture) criteria are 787°F (PWR) and 824°F (BWR). Permissible cladding temperatures for the HI-STORM system are in accordance with PNL criteria (i.e. 692°F PWR and 742°F BWR).

TABLE 4.2-4

(deleted)

TABLE 4.2-5

(deleted)

TABLE 4.2-6

(deleted)

TABLE 4.2-7

STATIC PAD ANALYSIS MAXIMUM RESPONSE VALUES

LOADING CONDITIONS		MAXIMUM MOMENT (k-ft/ft)	MAXIMUM SHEAR FORCE (k/ft)	MAXIMUM SOIL PRESSURE (k/ft^2)
Dead Load		0.0	0.0	0.45
Live Load	2 Casks	80.5	8.2	1.35
	4 Casks	63.7	10.0	1.71
	8 Casks	44.3	5.9	1.51
	8 Casks + Transporter	44.3	10.7	3.09

Notes:

1. Values for maximum moment and shear taken from Reference 16.
2. Values for maximum soil pressure taken from Reference 16 and include the weight of the storage pad.

TABLE 4.2-8

DYNAMIC PAD ANALYSIS MAXIMUM RESPONSE VALUES

(based on PSHA design basis earthquake – See Section 8.2.1.1)

PSHA DESIGN BASIS EARTHQUAKE LOADING	MAXIMUM MOMENT (k-ft/ft)	MAX. SHEAR FORCE (k/ft)	MAXIMUM SOIL PRESSURE (k/ft^2)	MAX. HORIZONTAL TOTAL SOIL REACTION (kips)	
				(Y-direction)	(X-direction)
2 Casks	184.7	37.9	4.11+0.45DL	749	943
4 Casks	206.0	46.8	3.76+0.45DL	1,237	1,494
8 Casks	167.0	40.7	5.14+0.45DL	2,102	2,212

Notes:

1. Values for maximum moment and shear taken from Reference 16.
2. Values for maximum soil pressure taken from Reference 16.
3. Values for maximum horizontal total soil reaction taken from Reference 16.

TABLE 4.7-1

PHYSICAL CHARACTERISTICS OF THE HI-TRAC TRANSFER CASK

PARAMETER	VALUE
Inside Diameter	68.75 inches
Outside Diameter	94.625 inches
Height	201.50 inches
Materials of Construction	Steel (inner and outer shell) Lead (gamma shield) Water (neutron absorber)
Weight (empty)	152,636 lb
Maximum Working Dose Rate[1] (1 meter from surface) Side	42 mrem/hr

1. Dose rates are based on HI-TRAC design basis zircaloy clad fuel for normal conditions.

Table 4.7-2

HI-TRAC TRANSFER CASK STEADY STATE TEMPERATURE EVALUATION

COMPONENT	TEMPERATURE (°F)	SHORT-TERM TEMPERATURE LIMITS (°F)
Ambient Air	100	N/A
Transfer Cask Outer Shell	223	700
Top Neutron Shield	175	300
Bulk Average Water Jacket	269	307
Transfer Cask Inner Surface	323	600
Canister Shell	459	775
Basket	884	950
Fuel Cladding	902	1058

TABLE 4.7-3

(deleted)

FIGURE 4.2-4

(deleted)

FIGURE 4.2-5 (1 of 4)

(deleted)

FIGURE 4.2-5 (2 of 4)

(deleted)

FIGURE 4.2-5 (3 of 4)

(deleted)

FIGURE 4.2-5 (4 of 4)

(deleted)

FIGURE 4.2-6

(deleted)

FIGURE 4.5-2

(deleted)

FIGURE 4.7-3

(deleted)

FIgure Withheld Under 10 CFR 2.390

Figure 4.1-1

CANISTER TRANSFER BUILDING

PRIVATE FUEL STORAGE FACILITY
SAFETY ANALYSIS REPORT

FIgure Withheld Under 10 CFR 2.390

Figure 4.1-2

SECURITY AND HEALTH PHYSICS BUILDING

PRIVATE FUEL STORAGE FACILITY SAFETY ANALYSIS REPORT

Revision 0

FIgure Withheld Under 10 CFR 2.390

FIgure 4.1-3

ADMINISTRATION BUILDING

PRIVATE FUEL STORAGE FACILITY
SAFETY ANALYSIS REPORT

Revision 0

FIgure Withheld Under 10 CFR 2.390

Figure 4.1-4
OPERATIONS AND MAINTENANCE BUILDING

PRIVATE FUEL STORAGE FACILITY
SAFETY ANALYSIS REPORT

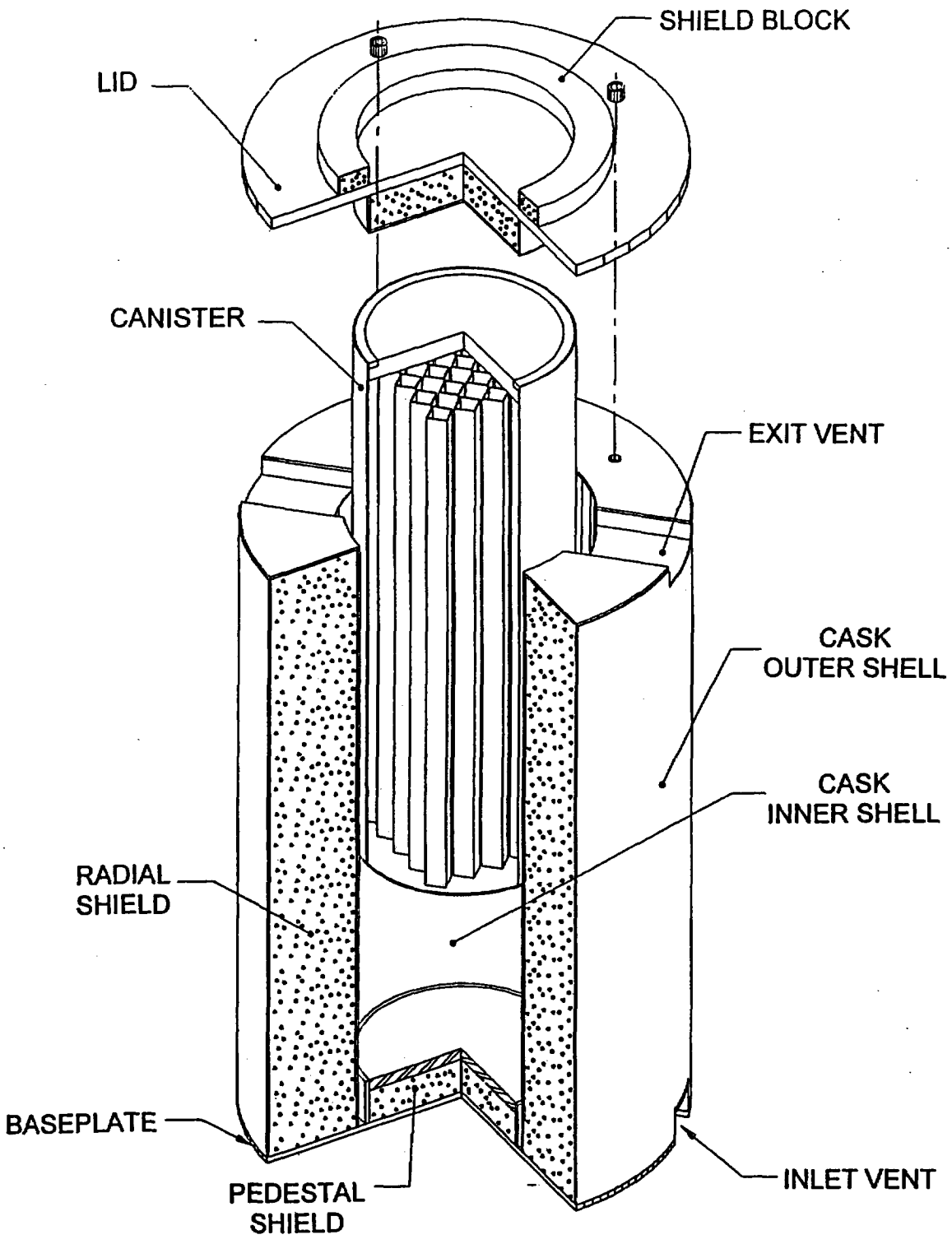

Figure 4.2-1

HI-STORM STORAGE COMPONENTS

PRIVATE FUEL STORAGE FACILITY
SAFETY ANALYSIS REPORT

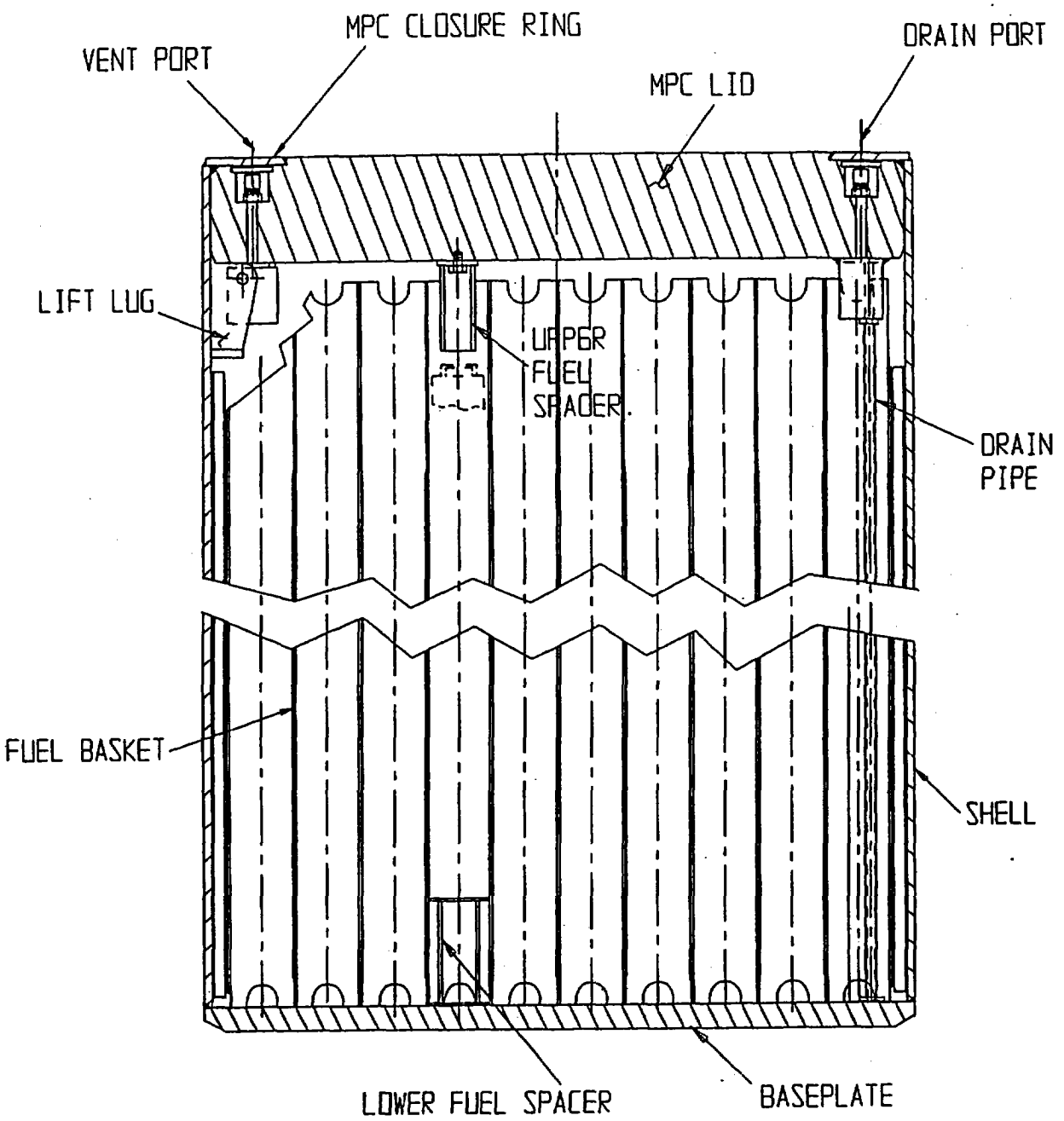

CROSS SECTION ELEVATION VIEW OF MPC

Figure 4.2-2 (Sheet 1 of 3)

HI-STORM STORAGE CANISTER

PRIVATE FUEL STORAGE FACILITY
SAFETY ANALYSIS REPORT

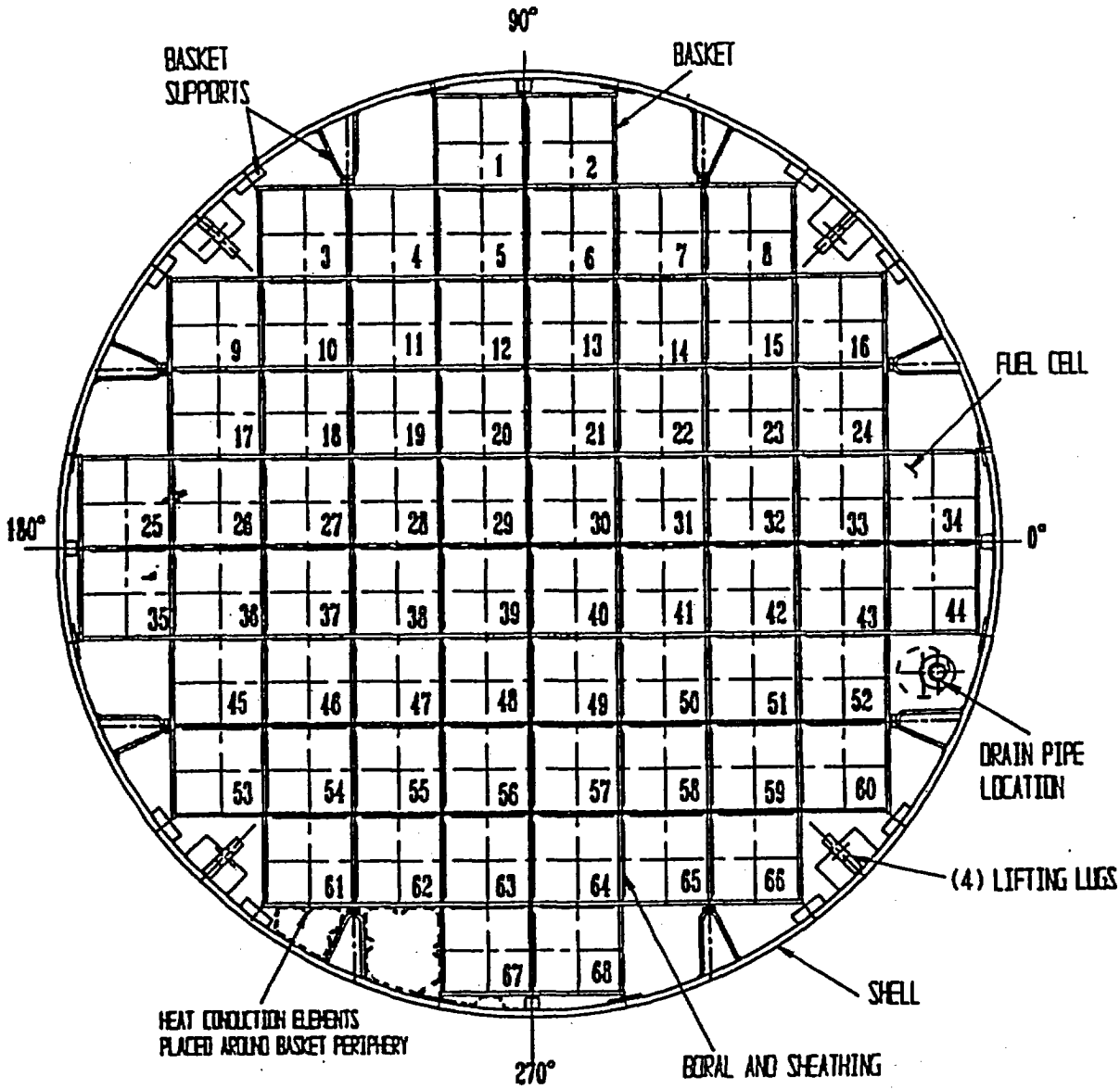

MPC-68 CROSS SECTION VIEW

Figure 4.2-2 (Sheet 2 of 3)

HI-STORM STORAGE CANISTER

PRIVATE FUEL STORAGE FACILITY
SAFETY ANALYSIS REPORT

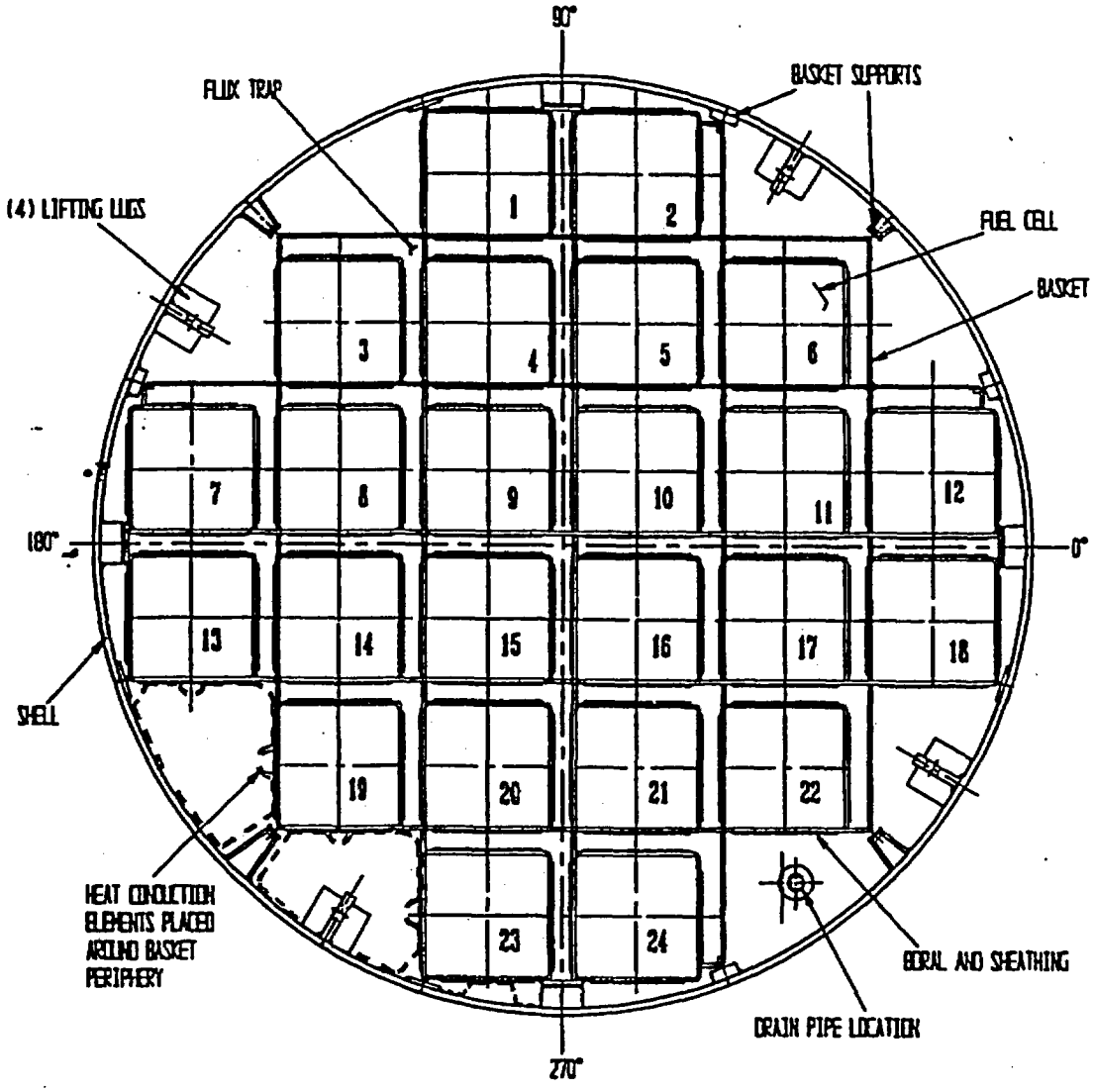

NPC-24 CROSS SECTION VIEW

Figure 4.2-2 (Sheet 3 of 3)

HI-STORM STORAGE CANISTER

PRIVATE FUEL STORAGE FACILITY
SAFETY ANALYSIS REPORT

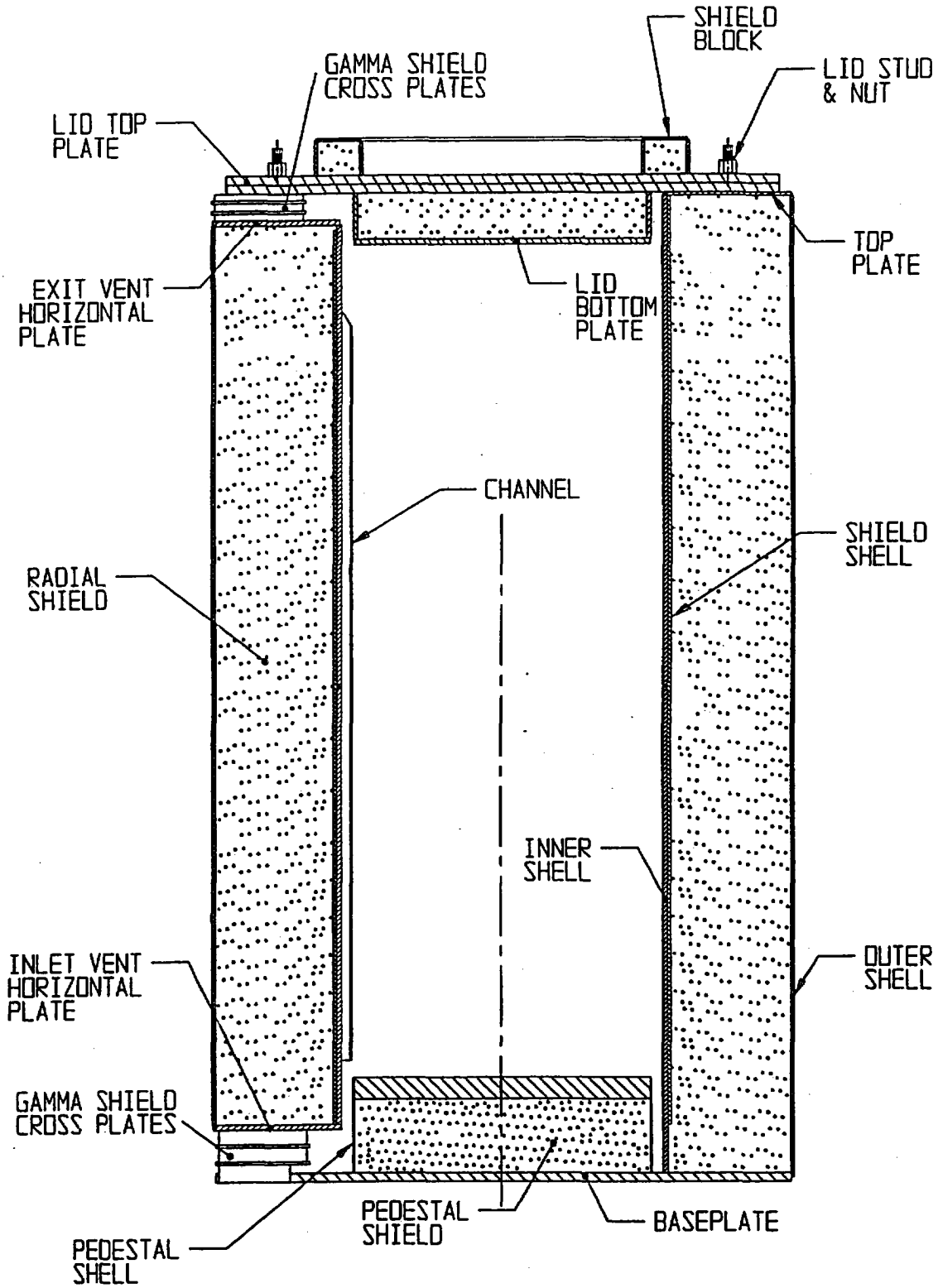

Figure 4.2-3

HI-STORM STORAGE CASK

PRIVATE FUEL STORAGE FACILITY
SAFETY ANALYSIS REPORT

FIGURE 4.2-4

(deleted)

FIGURE 4.2-5 (1 of 4)

(deleted)

FIGURE 4.2-5 (2 of 4)

(deleted)

FIGURE 4.2-5 (3 of 4)

(deleted)

FIGURE 4.2-5 (4 of 4)

(deleted)

FIGURE 4.2-6

(deleted)

FIgure Withheld Under 10 CFR 2.390

Figure 4.2-7

CASK STORAGE PADS

PRIVATE FUEL STORAGE FACILITY
SAFETY ANALYSIS REPORT

Figure Withheld Under 10 CFR 2.390

Figure 4.2-8

COMPUTER MODEL OF CASK STORAGE PAD

PRIVATE FUEL STORAGE FACILITY
SAFETY ANALYSIS REPORT

Revision 0

FIgure Withheld Under 10 CFR 2.390

Figure 4.3-1

CANISTER TRANSFER BUILDING
FIRE ZONES & BARRIERS

PRIVATE FUEL STORAGE FACILITY
SAFETY ANALYSIS REPORT

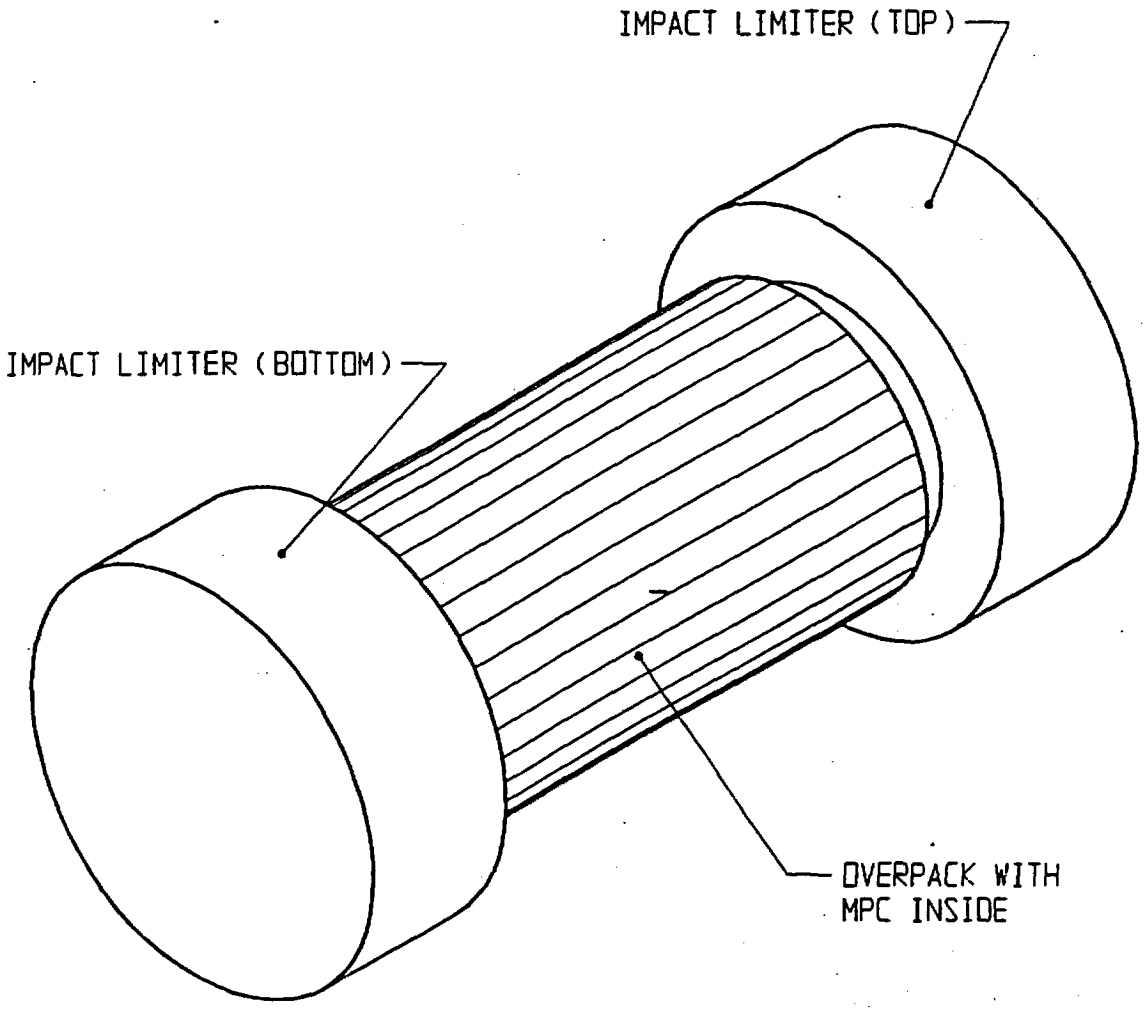

PICTORIAL VIEW OF
HI-STAR 100 PACKAGING

Figure 4.5-1 (Sheet 1 of 2)

HI-STAR SHIPPING CASK

PRIVATE FUEL STORAGE FACILITY
SAFETY ANALYSIS REPORT

FIGURE 4.5-2

(deleted)

FIgure Withheld Under 10 CFR 2.390

Figure 4.5-3 (Sheet 1 of 2)

INTERMODAL TRANSFER POINT

PRIVATE FUEL STORAGE FACILITY
SAFETY ANALYSIS REPORT

FIgure Withheld Under 10 CFR 2.390

Figure 4.5-3 (Sheet 2 of 2)

INTERMODAL TRANSFER POINT

PRIVATE FUEL STORAGE FACILITY
SAFETY ANALYSIS REPORT

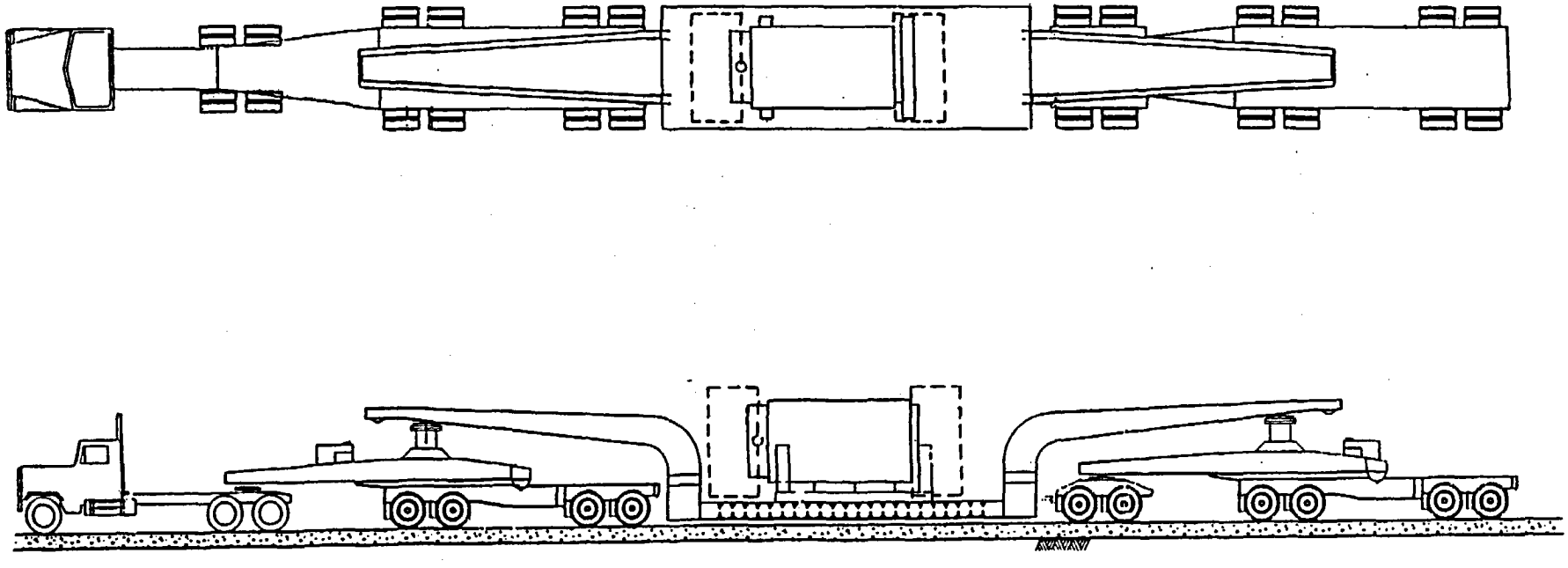

Figure 4.5-4

SHIPPING CASK HEAVY HAUL TRACTOR/TRAILER

PRIVATE FUEL STORAGE FACILITY
SAFETY ANALYSIS REPORT

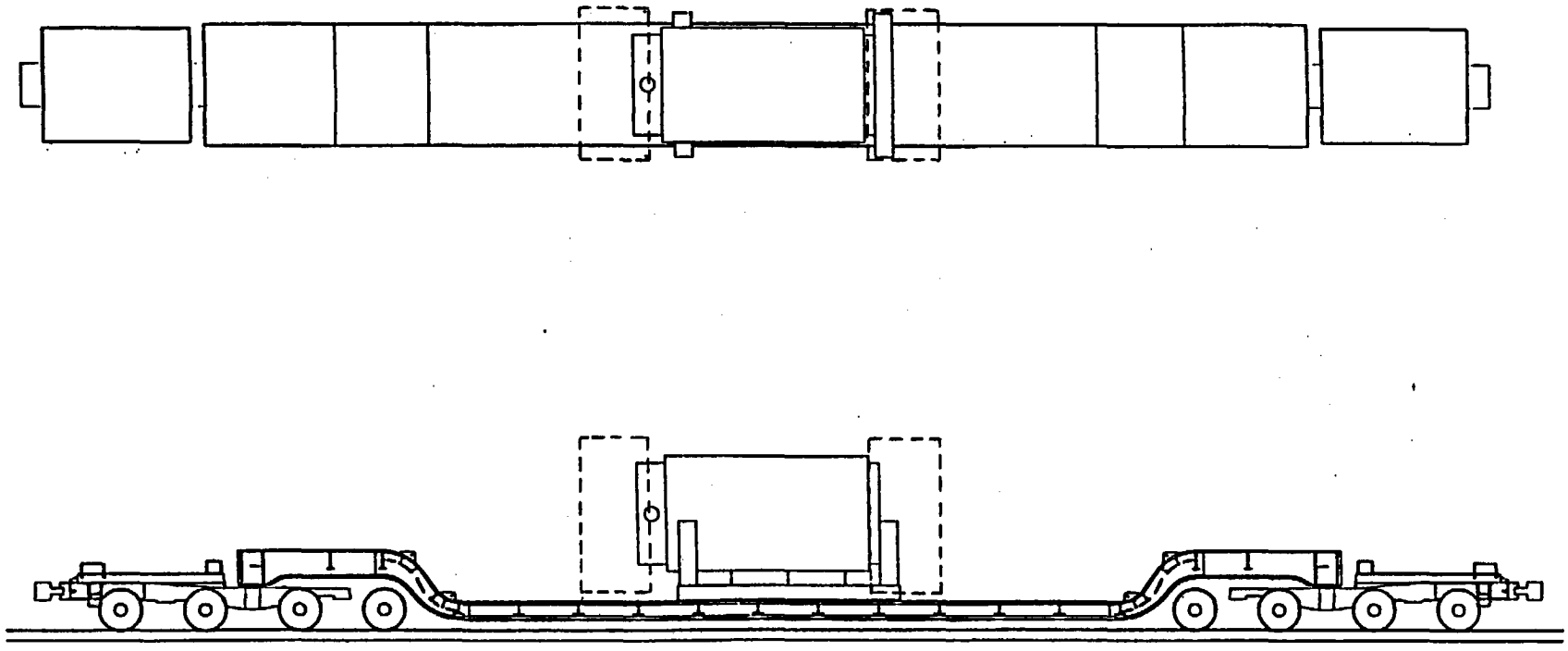

Figure 4.5-5

150 TON DEPRESSED CENTER RAIL CAR

PRIVATE FUEL STORAGE FACILITY
SAFETY ANALYSIS REPORT

FIgure Withheld Under 10 CFR 2.390

Figure 4.5-6 (Sheet 1 of 4)

LOW CORRIDOR RAIL LINE

PRIVATE FUEL STORAGE FACILITY
SAFETY ANALYSIS REPORT

FIgure Withheld Under 10 CFR 2.390

Figure 4.5-6 (Sheet 2 of 4)

LOW CORRIDOR RAIL LINE

PRIVATE FUEL STORAGE FACILITY
SAFETY ANALYSIS REPORT

FIgure Withheld Under 10 CFR 2.390

Figure 4.5-6 (Sheet 3 of 4)

LOW CORRIDOR RAIL LINE

PRIVATE FUEL STORAGE FACILITY
SAFETY ANALYSIS REPORT

FIgure Withheld Under 10 CFR 2.390

Figure 4.5-6 (Sheet 4 of 4).

LOW CORRIDOR RAIL LINE

PRIVATE FUEL STORAGE FACILITY
SAFETY ANALYSIS REPORT

FIgure Withheld Under 10 CFR 2.390

Figure 4.7-1 (Sheet 1 of 3)

CANISTER TRANSFER BUILDING

PRIVATE FUEL STORAGE FACILITY
SAFETY ANALYSIS REPORT

FIgure Withheld Under 10 CFR 2.390

Figure 4.7-1 (Sheet 2 of 3)

CANISTER TRANSFER BUILDING

PRIVATE FUEL STORAGE FACILITY
SAFETY ANALYSIS REPORT

FIgure Withheld Under 10 CFR 2.390

Figure 4.7-1 (Sheet 3 of 3)

CANISTER TRANSFER BUILDING

PRIVATE FUEL STORAGE FACILITY
SAFETY ANALYSIS REPORT

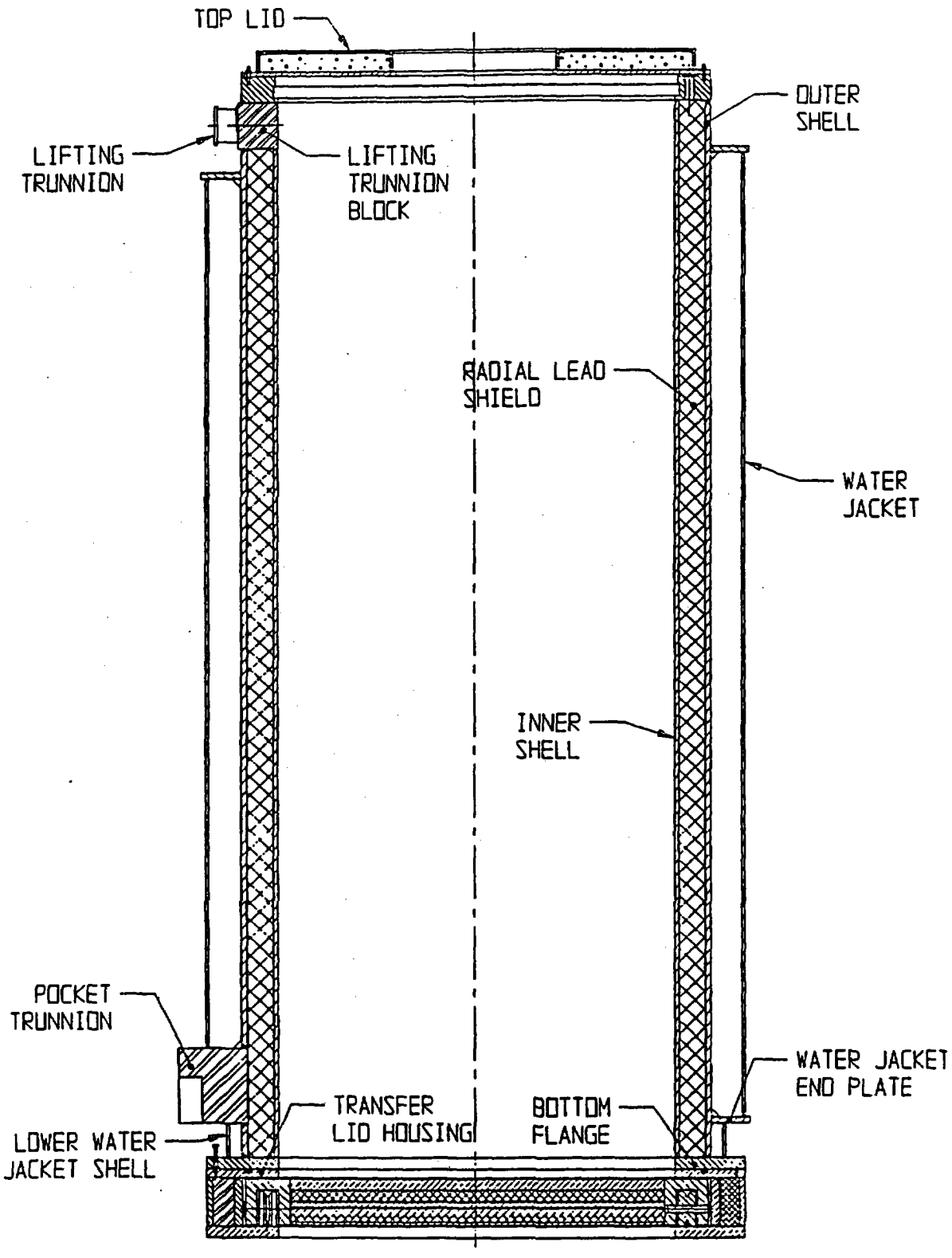

Figure 4.7-2

HI-TRAC TRANSFER CASK

PRIVATE FUEL STORAGE FACILITY SAFETY ANALYSIS REPORT

FIGURE 4.7-3

(deleted)

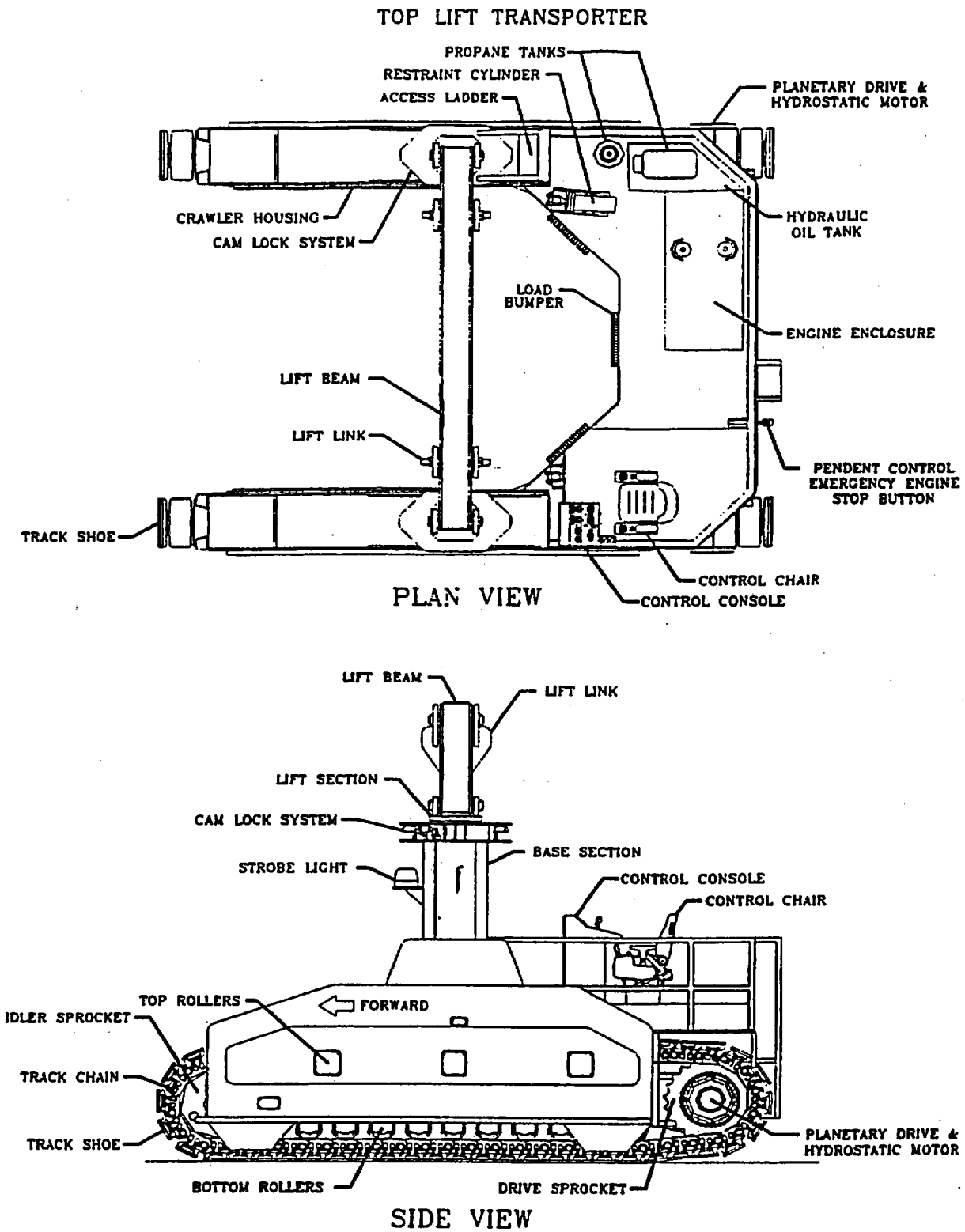

Figure 4.7-4

CASK TRANSPORTER

PRIVATE FUEL STORAGE FACILITY SAFETY ANALYSIS REPORT

FIgure Withheld Under 10 CFR 2.390

Figure 4.7-5

OVERHEAD BRIDGE CRANE
200 / 25 TON CAPACITY

PRIVATE FUEL STORAGE FACILITY
SAFETY ANALYSIS REPORT

FIgure Withheld Under 10 CFR 2.390

Figure 4.7-6

SEMI-GANTRY CRANE
150 / 25 TON CAPACITY

PRIVATE FUEL STORAGE FACILITY
SAFETY ANALYSIS REPORT

Revision 3

FIgure Withheld Under 10 CFR 2.390

Figure 4.7-7

SEISMIC SUPPORT STRUTS

PRIVATE FUEL STORAGE FACILITY
SAFETY ANALYSIS REPORT

FIgure Withheld Under 10 CFR 2.390

Figure 4.7-8

CANISTER TRANSFER BUILDING
MISSILE BARRIERS

PRIVATE FUEL STORAGE FACILITY
SAFETY ANALYSIS REPORT

CHAPTER 5

OPERATION SYSTEMS

TABLE OF CONTENTS

SECTION	TITLE	PAGE
5.1	OPERATION DESCRIPTION	5.1-1
5.1.1	Operations at the Originating Nuclear Power Plant	5.1-2
5.1.2	Operations Between the Originating Nuclear Plant and the PFSF	5.1-3
5.1.3	Operations Between the Railroad Mainline and the PFSF	5.1-3
5.1.4	Operations at the PFSF	5.1-4
5.1.4.1	Receipt and Inspection of Incoming Shipping Cask and Canisters	5.1-4
5.1.4.2	Transfer of Canister from Shipping Cask to Storage Cask	5.1-4
5.1.4.3	Placement of the Storage Cask on the Storage Pad	5.1-6
5.1.4.4	Surveillance of the Storage Casks	5.1-6
5.1.4.5	Security Operations	5.1-7
5.1.4.6	Health Physics Operations	5.1-7
5.1.4.7	Maintenance Operations	5.1-8
5.1.4.8	Transfer of Canisters from the PFSF Offsite	5.1-8
5.1.5	Flow Sheets	5.1-8
5.1.6	Identification of Subjects for Safety Analysis	5.1-9
5.1.6.1	Criticality Prevention	5.1-9
5.1.6.2	Chemical Safety	5.1-9
5.1.6.3	Operation Shutdown Modes	5.1-9
5.1.6.4	Instrumentation	5.1-10

TABLE OF CONTENTS (cont.)

SECTION	TITLE	PAGE
5.1.6.5	Maintenance Techniques	5.1-10
5.2	SPENT FUEL CANISTER HANDLING SYSTEMS	5.2-1
5.2.1	Spent Fuel Canister Receipt, Handling, and Transfer	5.2-1
5.2.1.1	Spent Fuel Canister Receipt	5.2-1
5.2.1.1.1	Functional Description	5.2-1
5.2.1.1.2	Safety Features	5.2-1
5.2.1.2	Spent Fuel Canister Handling	5.2-2
5.2.1.2.1	Functional Description	5.2-2
5.2.1.2.2	Safety Features	5.2-2
5.2.1.3	Spent Fuel Canister Transfer	5.2-4
5.2.1.3.1	Functional Description	5.2-4
5.2.1.3.2	Safety Features	5.2-4
5.2.2	Spent Fuel Canister Storage	5.2-6
5.2.2.1	Safety Features	5.2-6
5.3	OTHER OPERATING SYSTEMS	5.3-1
5.4	OPERATION SUPPORT SYSTEMS	5.4-1
5.4.1	Instrumentation and Control Systems	5.4-1
5.4.2	System and Component Spares	5.4-1

TABLE OF CONTENTS (cont.)

SECTION	TITLE	PAGE
5.5	CONTROL ROOM AND CONTROL AREA	5.5-1
5.6	ANALYTICAL SAMPLING	5.6-1
5.7	REFERENCES	5.7-1

TABLE OF CONTENTS (cont.)

LIST OF TABLES

TABLE	TITLE
5.1-1	ANTICIPATED TIME AND PERSONNEL REQUIREMENTS FOR HI-STORM CANISTER TRANSFER OPERATIONS (2 Sheets)
5.1-2	(deleted -2 Sheets)

TABLE OF CONTENTS (cont.)

LIST OF FIGURES

FIGURE	TITLE
5.1-1	HI-STORM CANISTER TRANSFER OPERATIONAL SEQUENCE
5.1-2	HI-STORM CANISTER TRANSFER OPERATION
5.1-3	(deleted)
5.1-4	(deleted)
5.1-5	CANISTER SHIPMENT FROM THE PFSF OFFSITE OPERATIONAL SEQUENCE

THIS PAGE INTENTIONALLY LEFT BLANK

CHAPTER 5

OPERATION SYSTEMS

5.1 OPERATION DESCRIPTION

This chapter describes the operations that PFSLLC personnel perform using the HI-STORM 100 Cask System (Reference 1). The operation systems provide safe control of the PFSF canister handling and storage systems, which meets the intent of 10 CFR 72.122(j).

Operations related to the storage of spent fuel at the PFSF are performed at the originating nuclear power plant and at the PFSF. Spent fuel operations at the originating power plant are performed in accordance with the originating plant Owner's 10 CFR 50 license. Transport of the spent fuel from the plant to the PFSF is performed in accordance with the requirements of 10 CFR 71 and 49 CFR 171, 172, 173, 174, and 177. The system used to transport fuel to the PFSF is the HI-STAR 100 Shipping Cask System (Reference 3). Storage of the spent fuel at the PFSF is subject to the requirements of the PFSF license that is issued in accordance with 10 CFR 72.

The operations that are performed at the PFSF include the following:

- Receipt and inspection of incoming shipping casks with canisters containing spent fuel
- Transfer of canisters from shipping cask to storage cask
- Placement of the storage cask on storage pads
- Surveillance of storage casks
- Security of the PFSF

- Health Physics at the PFSF
- Maintenance at the PFSF
- Removal of canisters from the PFSF offsite
- Inventory documentation management

The majority of PFSF activity occurs during placement of canisters and casks within the facility and future removal of the canisters offsite. Supporting activities include monitoring storage casks and periodic maintenance of onsite equipment. The PFSLLC will provide detailed procedures for operating, inspecting, and testing the PFSF systems. These procedures will ensure that the spent fuel handling and storage operations are properly accomplished and are in accordance with the PFSF SAR and vendors' SARs.

The following description provides an overview of the operational process for the spent fuel storage facility systems.

5.1.1 Operations at Originating Nuclear Power Plant

The spent fuel operations at the originating nuclear power plant are not part of the PFSF. The description provided in this section is for information only.

Typically, an empty canister is placed inside a transfer cask and both the canister and transfer cask are placed into the spent fuel pool where the canister is loaded with spent fuel. (Some power plants may need to utilize dry transfer methods due to low crane capacity or plant restrictions). The canister exterior is prevented from direct contact with potentially contaminated spent fuel pool water by means of a water or inflatable barrier. Once the fuel is loaded, the canister lid is placed on the canister and the transfer cask is removed from the spent fuel pool. The canister lid and a redundant closure lid are welded to the canister and the canister is drained and vacuum dried.

The canister is then backfilled with inert helium gas and the drain and fill ports are welded closed, thereby sealing the canister. The outer surfaces of the transfer cask are then checked for surface contamination and decontaminated, if necessary.

The sealed canister is transferred from the transfer cask to a shipping cask, and the shipping cask closure bolted in place. The shipping cask is then loaded onto the shipment vehicle, fitted with impact limiters to protect the shipping cask during transportation, and shipped to the PFSF.

5.1.2 Operations Between the Originating Nuclear Power Plant and the PFSF

The shipping cask, containing the sealed spent fuel canister, is shipped by rail to the PFSF. During transportation, the shipping cask provides a complete confinement barrier for the canister that is capable of withstanding any accident that could occur. The shipping cask is fitted with impact limiting devices for additional protection during transit. The offsite transportation system is licensed in accordance with the requirements of 10 CFR 71, "Packaging and Transportation of Radioactive Material", and complies with the requirements of 49 CFR 171, "General Information, Regulations, and Definitions", 49 CFR 172, "Hazardous Materials Tables and Hazardous Materials Communications Regulations", 49 CFR 173, "Shippers - General Requirements for Shipments and Packages", 49 CFR 174, "Carriage by Rail", and 49 CFR 177, "Carriage by Public Highway".

5.1.3 Operations Between the Railroad Mainline and the PFSF

The PFSF is located approximately 24 miles south of the rail mainline and currently does not have rail access. The shipping casks are shipped to the PFSF by rail to either a new rail line located at Low Junction, where the shipping casks remain on the rail car and are transported 32 miles directly to the PFSF, or to an intermodal transfer point

located 1.8 miles West of Timpie, where the loaded shipping casks are transferred from the rail car to a heavy haul tractor/trailer for transport via highway the remaining 26 miles to the PFSF. At the intermodal transfer point are rail sidings, a single-failure-proof gantry crane, and a weather enclosure over the crane.

5.1.4 Operations at the PFSF

5.1.4.1 Receipt and Inspection of Incoming Shipping Cask and Canister

During spent fuel shipment, the canister is contained within the shipping cask, which is mounted horizontally on a rail car or heavy haul trailer. Impact limiters are mounted on either end of the shipping cask and a personnel barrier cover is located over the shipping cask between the impact limiters.

When the shipping cask arrives at the PFSF, the shipping cask, impact limiters, and shipping cradle are visually inspected for damage prior to entry into the Restricted Area (RA). After initial receipt approval the shipment is moved into the security vehicle trap for inspection by security personnel to ensure no unauthorized devices enter the RA. When security clearance is complete, the shipment proceeds into the RA and into the Canister Transfer Building where the personnel barrier is removed and the shipping cask is surveyed for dose rates and contamination levels

5.1.4.2 Transfer of Canister from Shipping Cask to Storage Cask

Transfer of the canister containing spent fuel from the shipping cask to the storage cask takes place within the Canister Transfer Building. After the receipt inspection, the overhead bridge crane is used to remove the impact limiters. The shipping cask lifting yoke is attached to the crane and hooked to the shipping cask, which is uprighted on

the cradle, lifted off the transport vehicle, and moved into one of three canister transfer cells. The shipping cask is secured in place by attaching support struts between the cask and the transfer cell walls. The shipping cask lid is unbolted and removed. The canister is then accessible through the top of the shipping cask where the canister lifting attachments and hoist slings are installed on the canister lid. Temporary shielding is positioned as required to maintain worker doses as-low-as-is-reasonably-achievable (ALARA).

The transfer cask is placed onto the shipping cask by the overhead bridge crane or semi-gantry crane. In order to assure cask stability in the event of an earthquake, the crane is not disconnected from the HI-TRAC transfer cask until seismic support struts are attached to the transfer cask, as discussed in Section 4.7.4.5.1. The HI-TRAC transfer cask can remain connected to the crane throughout the canister transfer operation since this transfer cask has a canister downloader that raises and lowers the canister and the crane is not needed to hoist the canister. In this case, it is not necessary to connect the seismic support struts since continuous connection of the HI-TRAC transfer cask to the crane provides assurance that the transfer cask cannot topple in the event of an earthquake. The seismic support struts are attached between the transfer cask and building columns. Shield doors installed on the bottom of the transfer cask are opened. The hoist slings are pulled up through the transfer cask and the canister is lifted up into the transfer cask just above the shield doors. The shield doors are closed and the canister is lowered onto the doors, which support the weight of the canister. The support struts are disconnected from the transfer cask. The transfer cask is lifted from the shipping cask by the crane and placed on top of the storage cask. Support struts are again attached between the transfer cask and transfer cell walls. Support struts are connected to the storage cask. The canister is lifted slightly to remove its weight from the transfer cask shield doors.

The shield doors are opened and the canister is lowered into the storage cask. The support struts are removed from the transfer cask. The transfer cask is removed from the top of the storage cask and the storage cask lid is installed. Temporary shielding is removed from the cask transfer area. The support struts are disconnected from the storage cask. During the transfer process, radiation levels are measured to assure doses to workers are ALARA.

5.1.4.3 Placement of the Storage Cask on the Storage Pad

The storage cask loading is now complete and ready for transport to a storage pad. The storage cask is moved out of the canister transfer cell by the cask transporter. The cask transporter lifts the storage cask approximately 4 inches high. The cask is then moved to the appropriate storage pad by the cask transporter. At the storage pad, the storage cask is positioned and lowered onto the storage pad. The temperature at the air outlet vents is taken after the cask is placed on the pad in accordance with Technical Specification requirements to confirm proper operation of the storage system.

5.1.4.4 Surveillance of the Storage Casks

While in storage, the proper operation of the storage casks is verified by surveillance procedures. Cask temperatures are measured by a continuous monitoring system to verify temperatures do not exceed temperature limits in the Technical Specifications. In addition, the cask air vents are inspected for blockage on a quarterly basis. An overall site observation surveillance is also performed on a periodic basis to detect any cask damage or accumulation of site debris.

Dose rates associated with individual storage casks are measured to verify that dose rates are within Technical Specification limits to ensure adequate shielding of the canister so that radiation exposure to the general public is minimized and occupational doses to personnel working in the vicinity of the storage casks are maintained as low as is reasonably achievable. Radiation doses emitted from the storage casks are measured by thermoluminescent dosimeters (TLDs) located at the restricted area (RA)

and owner controlled area (OCA) fences to ensure doses are within 10 CFR 20.1301 and 10 CFR 72.104 or 40 CFR 191 limits.

5.1.4.5 Security Operations

Security personnel coordinate several security related functions that include performing continual surveillance for intruders, evaluating intrusion alarms, processing visitors to the PFSF, searching packages and vehicles, issuing badges to workers, coordinating with local law enforcement agencies, and contacting appropriate emergency response personnel. The security personnel are also responsible for identifying and assessing off-normal and emergency events during off-shift hours of PFSF operation. Details for the security personnel are discussed in the PFSF Security Plan (Reference 5).

5.1.4.6 Health Physics Operations

The health physics (HP) personnel are responsible for taking radiation dose and contamination surveys on incoming spent fuel shipments. In order to maintain the PFSF philosophy of "Start Clean/Stay Clean", HP personnel ensure that contamination levels on the canisters of incoming shipments are within the Technical Specification requirements. Canisters exceeding the limits will be returned to the originating power plant for decontamination.

During the transfer process, HP personnel monitor doses to ensure that workers are not exposed to unnecessary radiation. In the event high doses are detected, temporary shielding, in the form of lead blankets, neutron shielding, portable shield walls, etc., are used to maintain doses ALARA. HP personnel perform dose rate surveillances of the loaded storage cask to ensure Technical Specification limits are met.

In addition to surveillance activities, HP personnel monitor onsite and offsite radiation levels to ensure worker and offsite doses are in accordance with regulatory requirements. HP personnel also calibrate radiation protection instrumentation.

5.1.4.7 Maintenance Operations

Because of their passive nature, the storage casks require little maintenance over the lifetime of the PFSF. Typical maintenance tasks may involve occasional replacement and recalibration of temperature monitoring instrumentation.

Periodic maintenance is required on the overhead bridge crane, semi-gantry crane, transfer equipment, and shipping casks. Maintenance of these SSCs, which are classified as important to safety, ensure that they are safe and reliable throughout the life of the PFSF per 10 CFR 72.122(f).

Maintenance is also required on the following components not important to safety: the heavy haul tractor/trailer (if used), rail car and locomotive (if used), cask transporter, security systems, temperature and radiation monitoring systems, diesel generator, electrical systems, fire protection systems, and site infrastructure. The Operations and Maintenance (O&M) Building is provided to facilitate maintenance activities.

5.1.4.8 Transfer of Canisters from PFSF Offsite

A 10 CFR 71 licensed shipping cask will transport in the future the canisters offsite to another facility. Transfer operations will utilize the Canister Transfer Building to transfer the canisters from the storage casks to the shipping casks. Once loaded in a shipping cask, the spent fuel canister is shipped to the designated facility.

5.1.5 Flow Sheets

A flow diagram and illustration showing the sequence of operations for canister receipt, transfer, and placement into storage is shown on Figures 5.1-1 and 5.1-2 for the HI-

STORM storage system.

A flow diagram showing the sequence of operations required to remove the canisters from the PFSF and ship them offsite is shown on Figure 5.1-5.

The number of personnel and the time required for the various operations are given in Table 5.1-1 for the HI-STORM system. This table is used to develop the occupational exposures in Chapter 7.

5.1.6 Identification of Subjects for Safety Analysis

5.1.6.1 Criticality Prevention

As discussed in Section 4.2.1.5.4, criticality is controlled at the PFSF by utilizing fuel assembly geometry. Poison materials are primarily for underwater canister loading in the originating nuclear plant spent fuel pool. During storage, with the canister dry and sealed from the environment, no further criticality control measures within the storage installation are necessary.

5.1.6.2 Chemical Safety

There are no chemical hazards associated with the operation of the PFSF.

5.1.6.3 Operation Shutdown Modes

During storage, there are no operational shutdown modes associated with the HI-STORM Storage System since the system is passive and relies on

natural air circulation for cooling. During canister transfer, the transfer process may be shut down at the end of the day until the next day because of the transfer duration. Operation procedures ensure that no shutdown can occur in the middle of an operational step. Operational shutdown steps following emergency or accident events are also addressed by the PFSF operational procedures. All operational shutdown modes at the PFSF are safe shutdown modes due to the design features of the facility.

5.1.6.4 Instrumentation

Due to the totally passive nature of the storage casks, there is no need for any instrumentation to perform safety functions. Temperature monitors are utilized as a means to monitor the cask temperature during storage. Area radiation monitors are used to measure radiation levels in the Canister Transfer Building during canister transfer operations and in the LLW storage room. Continuous air monitors, located in the exhaust of each canister transfer cell, monitor radioactivity concentrations in the air leaving each canister transfer cell. Portable radiation monitors are used to measure radiation levels of casks following canister transfer. PFSF personnel are equipped with personnel dosimeters whenever they are in the RA. The radiation dose will be monitored at the perimeters of the RA and OCA. The temperature and radiation monitors are classified as Not Important to Safety.

5.1.6.5 Maintenance Techniques

No special maintenance techniques are necessary that would require a safety analysis.

There is preventative maintenance performed on a regular basis on the overhead transfer crane, canister lifting equipment, cask transporter, heavy haul tractor/trailers, radiation detection and monitoring equipment, cask temperature monitoring equipment, security equipment, fire detection and suppression equipment, etc. Maintenance is performed in accordance with 10 CFR 72.122(f) and manufacturer's requirements.

5.2 SPENT FUEL CANISTER HANDLING SYSTEMS

5.2.1 Spent Fuel Canister Receipt, Handling, and Transfer

An operational description for the systems used for the receipt and transfer of spent fuel canisters is provided in the following paragraphs. Special features of these systems to ensure safe handling of the spent fuel canisters are also described.

5.2.1.1 Spent Fuel Canister Receipt

5.2.1.1.1 Functional Description

The shipping casks and impact limiters comprise the system in which the spent nuclear fuel canisters are contained when they arrive at the PFSF. The shipping cask system protects the enclosed spent fuel canister from physical damage, provides shielding, and allows sufficient cooling of the canister while enroute to the PFSF.

5.2.1.1.2 Safety Features

Safety features of the system include the impact limiters, which help protect the spent fuel shipping cask during transportation, and the design, materials, and construction of the shipping casks, which provide gamma and neutron shielding, conductive and radiant cooling, criticality control, and structural strength to protect the spent fuel canister. A tamperproof device on the cask provides indication of an unauthorized attempt to obtain access to the cask. These safety features are fully described in the HI-STAR shipping cask SAR.

5.2.1.2 Spent Fuel Canister Handling

5.2.1.2.1 Functional Description

The overhead bridge and semi-gantry cranes perform handling functions inside the Canister Transfer Building for the shipping cask and the transfer cask. The canister downloader, bolted on top of the HI-TRAC transfer cask is used to raise and lower the HI-STORM canister.

Shipping and transfer cask handling components include the shipping cask and transfer cask lifting yokes, trunnions, and seismic support struts.

The storage cask handling component consists of the storage cask lifting attachments, cask transporter, and the overhead bridge crane, if needed.

The canister handling components consist of the lifting slings and the HI-STORM canister lifting cleats.

5.2.1.2.2 Safety Features

Safety features of the overhead bridge and semi-gantry cranes include single-failure-proof designs for sustaining the load upon failure of any single component, limit switches for prevention of hook travel beyond safe operating positions, and provisions for lowering a load in the event of an overload trip. The cranes are classified as ASME NOG-1 Type I cranes. A Type I crane is defined as a crane that is designed and constructed to remain in place and support a critical load during and after a seismic event and has single-failure-proof features such that any credible failure of a single component will not result in the loss of capability to stop and/or hold the critical load. Design requirements for the cranes require testing, inspection, and maintenance activities on the cranes in accordance with 10 CFR 72.122(f) which, are performed in

accordance with the QA Program described in SAR Chapter 11 to ensure that the design requirements are satisfied. Strict adherence to the design, testing, inspection, and maintenance criteria as noted above ensure adequate safety margins are provided to prevent damage to the shipping cask, canister, or storage cask during normal, off-normal, and accident conditions. The crane designs include limit switches for prevention of bridge, trolley, and hook travel beyond safe operating positions, limits on bridge, trolley, and hook travel speeds, and provisions for lowering a load in the event of an overload trip. Periodic inspection and testing will be performed to keep the cranes certified to ASME NOG-1.

Safety features of the HI-TRAC downloader, used to raise and lower the HI-STORM canister during canister transfer operations, include a single-failure-proof design for sustaining the load upon failure of any single component and/or loss of hydraulic pressure as described in the HI-STORM SAR.

Safety features of the shipping and transfer cask handling components include single-failure-proof lift capacity or equivalent safety factor as described in the HI-STAR Shipping Cask and HI-STORM Storage Cask SARs.

Use of seismic support struts ensure the shipping and transfer cask do not topple over during an earthquake. Safety features of the seismic support struts include using standard rigid support assemblies that conform to ASME III, NF requirements for Class 2 nuclear grade supports. As such, the struts are subject to QA requirements per 10 CFR 50, Appendix B; material certification, design, and NDE per ASME III NF; and welder and weld qualifications per ASME IX. Each cask utilizes 2 struts, which provide restraint in both orthogonal horizontal directions.

There are no safety features associated with the cask transporter since the storage cask is designed to withstand drops that could result from a failure associated with the transporter lift components. The transporter is designed such that the lift mechanism can only lift the storage cask within lift heights specified by the Technical Specifications. The hydraulic lift cylinders are equipped with double locking valves and a cam locking system engages and holds the load in the event a cylinder looses holding power. Indicator lights on the operating console inform the operator if the cams are disengaged or engaged. Markings on the lift boom and a meter on the operating console give indication of the lifted height.

The safety features of the canister handling components, slings and canister lifting cleats, are their redundancy and the required stress safety margins as described in the HI-STORM SAR.

5.2.1.3 Spent Fuel Canister Transfer

5.2.1.3.1 Functional Description

The transfer cask is used for transfer of the spent fuel canister between the shipping cask and the storage cask. The transfer cask protects the spent fuel canister from physical damage and provides radiation shielding.

5.2.1.3.2 Safety Features

The transfer casks provide radiation shielding and act as special lifting devices when carrying a canister loaded with spent fuel. The transfer cask lifting trunnions are designed and tested to the single-failure-proof requirements of NUREG-0612 (Reference 6) and ANSI N14.6 (Reference 7) so that canisters can be lifted by the transfer cask without the requirement to analyze a transfer cask drop. However, annual

testing requirements per ANSI N14.6 of the transfer cask trunnion welds is not performed since the welds cannot be accessed for testing and NDE.

The transfer casks consist of cylindrical steel liners with a lead gamma shield and a neutron shield. Two trunnions are provided for transfer cask handling. The transfer cask has movable shield doors at the bottom to allow raising the canister into the transfer cask, lowering of the canister into the storage or shipping cask, or to support the canister weight and provide shielding while in the transfer cask. The doors slide in steel guides along each side of the transfer cask. Steel pins or bolts are used to prevent inadvertent opening of the doors. Roller bearings on the HI-TRAC transfer cask enable the cask doors to be manually operated.

The transfer casks are designed to prevent the canister from being lifted beyond the top of the cask, which would expose the canister and cause high radiation doses. On the HI-TRAC transfer cask, the canister downloader, which raises the canister, is bolted on top of the cask. The canister can only be lifted up to the downloader hoist mechanical stops and is prevented from being raised beyond the top of the HI-TRAC cask.

The lifting yokes provided with the transfer casks are used to interface with the crane.

The safety features of the HI-TRAC transfer cask are described in greater detail in the HI-STORM SAR.

5.2.2 Spent Fuel Canister Storage

Spent fuel storage consists of the HI-STORM storage system, which includes spent fuel canisters placed in the steel and concrete storage casks located on the storage pads. The storage system is a passive design and requires no support systems for operation. The storage system performs its functions under normal conditions as discussed in Chapter 4 and off-normal and accident level conditions as discussed in Chapter 8. Limits of operation associated with various normal and off-normal conditions are contained in the PFSF Technical Specifications. Surveillance requirements are also contained in the PFSF Technical Specifications.

5.2.2.1 Safety Features

Safety features include a passive dry cask design and administrative controls. The canister is enclosed in the cavity of the storage cask, which protects the canister from severe natural phenomena (such as tornado-driven missiles), provides required shielding of the canister, and flow paths for natural convection cooling. The results of analyses of hypothetical storage cask tipover events are described in Section 8.2.6, where it is concluded that the canister will remain intact inside the storage cask and canister internals will not be damaged. Safety features are discussed in greater detail in Chapter 4, Chapter 8, and the HI-STORM SAR.

5.3 OTHER OPERATING SYSTEMS

The storage casks are passive and require no other operating systems for safe storage of the spent fuel once they are placed into storage. All the PFSF operating systems are described in Sections 5.1 and 5.2.

THIS PAGE INTENTIONALLY BLANK

5.4 OPERATION SUPPORT SYSTEMS

5.4.1 Instrumentation and Control Systems

Regulation 10 CFR 72.122(i) requires that instrumentation and control systems be provided to monitor systems that are classified as Important to Safety. The operation of the PFSF is passive and self-contained and therefore does not require control systems to ensure the safe operation of the system. However, temperatures of the storage casks are monitored to provide a means for assessing thermal performance of the storage casks. The temperature monitors are equipped with data recorders and alarms located in the Security and Health Physics Building. The temperature monitors are not required for safety and therefore are not subject to important to safety criteria.

Radiation monitoring is provided to ensure doses remain ALARA and is discussed in Section 7.3.4. Radiation monitoring is not required to support systems that are classified as Important to Safety.

In the event of an earthquake, the PFSF will contact the National Earthquake Information Center, Golden, CO to acquire seismic data for the PFSF.

No other instrumentation or control systems are necessary or are utilized. Therefore, the requirements of 10 CFR 72.122(i) are satisfied.

5.4.2 System and Component Spares

Spare temperature monitoring devices are maintained at the site. However, these devices are not required to maintain safe conditions at the PFSF. No other instrumentation spares are required.

THIS PAGE INTENTIONALLY BLANK

5.5 CONTROL ROOM AND CONTROL AREAS

Regulation 10 CFR 72.122(j) requires the control room or control area to be designed to ensure that the PFSF is safely operated, monitored, and controlled for off-normal or accident conditions. This requirement is not applicable to the PFSF because the spent fuel storage system is a passive system and requires no control room to ensure safe operation at the PFSF.

THIS PAGE INTENTIONALLY BLANK

5.6 ANALYTICAL SAMPLING

No sampling is required for the safe operation of the PFSF or to ensure that operations are within prescribed limits. Sampling of the gas inside the shipping cask is performed prior to venting and opening the cask in the Canister Transfer Building. Evaluation of the gas sample determines if the gas can be released to the atmosphere or if it must be filtered and the appropriate radiological protection needed when removing the shipping cask closure. Since the sampling is not required for nuclear safety of the facility, it is not subject to Important to Safety criteria.

THIS PAGE INTENTIONALLY BLANK

5.7 REFERENCES

1. Final Safety Analysis Report for the Holtec International Storage and Transfer Operation Reinforced Module Cask System (HI-STORM 100 Cask System), Holtec Report HI-2002444, NRC Docket No. 72-1014, Revision 0, July 2000.

2. (deleted)

3. Topical Safety Analysis Report for the Holtec International Storage, Transport, and Repository Cask System (HI-STAR 100 Cask System), Holtec Report HI-951251, Docket 71-9261, Revision 9, April 2000.

4. (deleted)

5. PFSF Security Plan, Revision 0.

6. NUREG-0612, Control of Heavy Loads at Nuclear Power Plants, U.S. Nuclear Regulatory Commission, July 1980.

7. ANSI N14.6, Radioactive Materials - Special Lifting Devices for Shipping Containers, 1993.

THIS PAGE INTENTIONALLY BLANK

TABLE 5.1-1
(Sheet 1 of 2)

ANTICIPATED TIME AND PERSONNEL REQUIREMENTS FOR HI-STORM CANISTER TRANSFER OPERATIONS

OPERATION	NO. OF PERSONNEL[1]	TASK DURATION (HOURS)
1. Receive and inspect shipment. Measure dose rates.	3	0.5
2. Move shipment into Canister Transfer Building.	4	0.5
3. Remove personnel barrier, measure cask dose rates, and perform contamination survey.	3	1.6
4. Remove impact limiters and tiedowns.	3	1.5
5. Attach lifting yoke to crane and HI-STAR shipping cask. Upright HI-STAR cask and move to transfer cell. Connect support struts.	3	1.0
6. Sample enclosed cask gas and vent.	2	0.5
7. Remove HI-STAR closure plate bolts.	3	1.0
8. Remove HI-STAR closure plate (lid).	3	0.2
9. Prep HI-STAR to mate with HI-TRAC transfer cask.	3	0.2
10. Install canister lift cleats and attach slings.	3	1.0
11. Attach lifting yoke to crane and HI-TRAC.	3	0.5
12. Mount HI-TRAC on top of HI-STAR. Connect support struts to HI-TRAC.[2]	3	0.5
13. Open HI-TRAC transfer cask doors.	3	0.2
14. Attach slings to canister downloader hoist and raise canister.	3	0.5
15. Close HI-TRAC doors and install pins.	3	0.2
16. Lower canister onto HI-TRAC doors.	3	0.2
17. Prep HI-STORM storage cask to mate with HI-TRAC transfer cask. Disconnect support struts.[2]	3	0.2
18. Move HI-TRAC from HI-STAR to HI-STORM. Attach support struts to HI-TRAC and HI-STORM.[2]	3	0.8
19. Raise canister and open HI-TRAC doors.	3	0.5
20. Lower canister into HI-STORM storage cask.	3	0.5

TABLE 5.1-1
(Sheet 2 of 2)

ANTICIPATED TIME AND PERSONNEL REQUIREMENTS
FOR HI-STORM CANISTER TRANSFER OPERATIONS

OPERATION	NO. OF PERSONNEL[1]	TASK DURATION (HOURS)
21. Disconnect lifting slings.	3	0.2
22. Close transfer cask doors.	3	0.2
23. Disconnect support struts.[2] Remove HI-TRAC from HI-STORM	3	0.5
24. Remove canister lift cleats.	3	0.5
25. Install HI-STORM lid,and lid bolts.	3	1.0
26. Perform dose survey and install HI-STORM lifting eyes.	3	0.5
27. Drive cask transporter in transfer cell.	2	0.3
28. Connect HI-STORM to cask transporter.	3	0.5
29. Raise HI-STORM storage cask.	3	0.2
30. Transport HI-STORM cask to storage pad.	3	2.0
31. Position and lower HI-STORM cask on pad.	3	0.5
32. Disconnect HI-STORM cask from transporter and remove cask lifting eyes.	3	1.0
33. Connect cask temperature instrumentation.	3	0.5
34. Perform cask operability tests.	2	48
Total Hours	-	19.9[3]

Notes

1. Number of personnel typically includes 2 to 3 operators and 1 HP technician.
2. While the HI-TRAC transfer cask is connected to the crane, it is not necessary to attach the seismic support struts to the transfer cask, since connection of the crane to the transfer cask provides assurance that the transfer cask cannot topple in the event of an earthquake. However, prior to disconnecting the crane from the transfer cask, the support struts must be connected to the transfer cask.
3. Total does not reflect 48 hour duration in Step 34, which is time required for cask temperature to reach equilibrium. Personnel time required to monitor temperatures during the equilibrium phase is minimal.

TABLE 5.1-2
(Sheet 1 of 2)

(deleted)

TABLE 5.1-2
(Sheet 2 of 2)

(deleted)

FIGURE 5.1-3

(deleted)

FIGURE 5.1-4

(deleted)

FIgure Withheld Under 10 CFR 2.390

Figure 5.1-1

HI-STORM CANISTER TRANSFER OPERATIONAL SEQUENCE

PRIVATE FUEL STORAGE FACILITY
SAFETY ANALYSIS REPORT

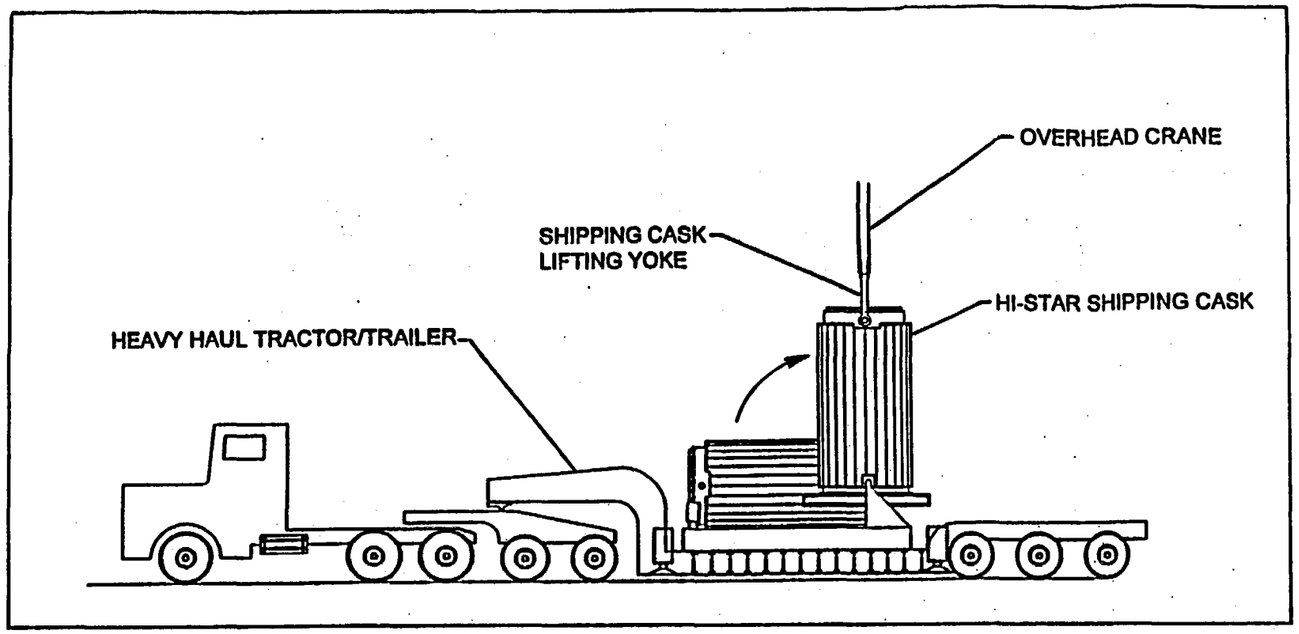

AFTER RECEIPT INSPECTION AND PLACEMENT INTO CANISTER TRANSFER BUILDING, UPRIGHT SHIPPING CASK, LIFT OFF TRAILER, AND MOVE TO TRANSFER CELL

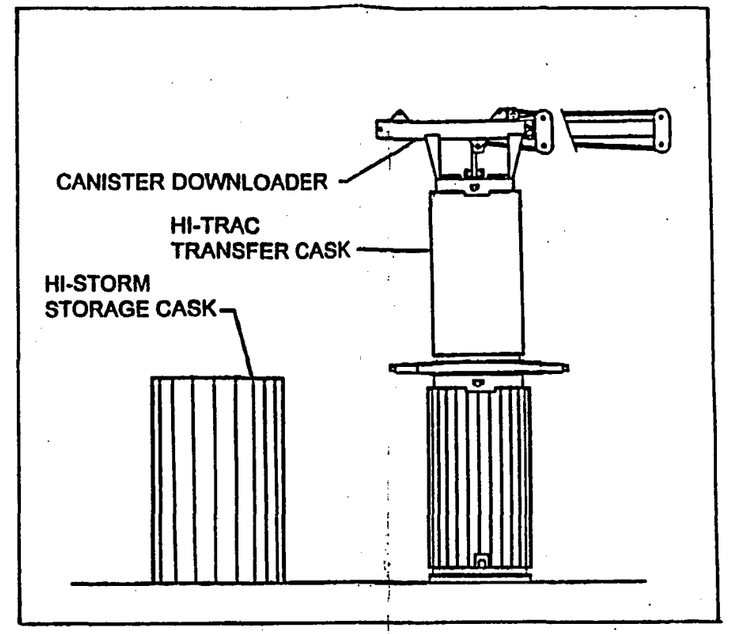

PLACE TRANSFER CASK ON SHIPPING CASK, OPEN SHIELD DOORS, AND RAISE CANISTER INTO TRANSFER CASK BY EXTENDING DOWNLOADER

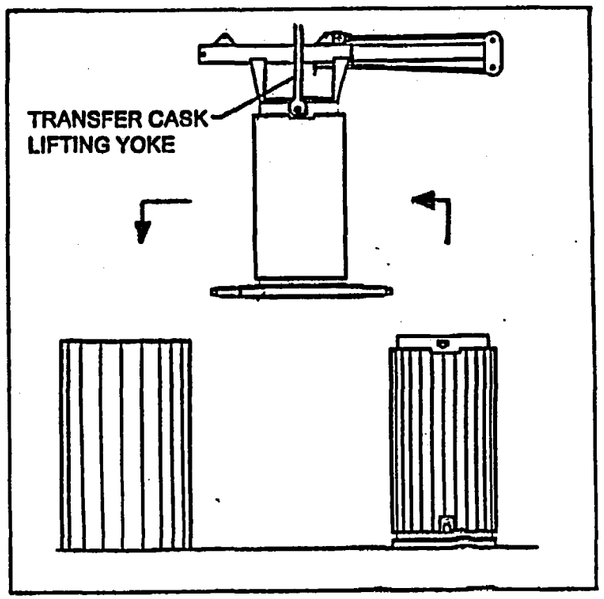

MOVE TRANSFER CASK FROM TOP OF SHIPPING CASK TO TOP OF STORAGE CASK VIA CRANE

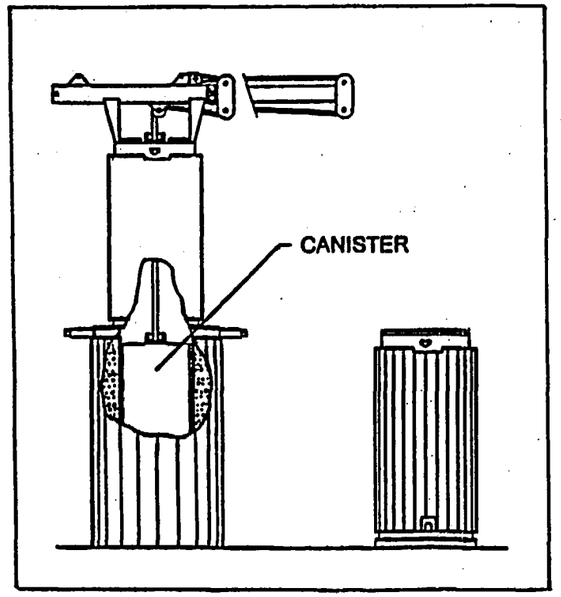

OPEN SHIELD DOORS AND LOWER CANISTER INTO STORAGE CASK BY RETRACTING DOWNLOADER. REMOVE TRANSFER CASK AND INSTALL STORAGE CASK LID

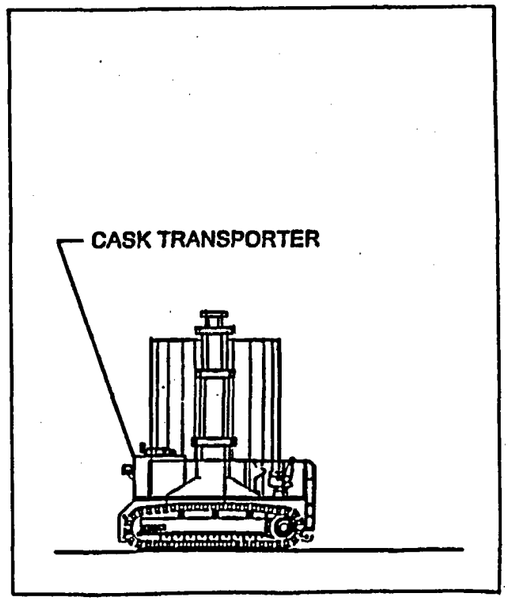

TRANSPORT STORAGE CASK TO STORAGE PAD VIA CASK TRANSPORTER

Figure 5.1-2

HI-STORM CANISTER TRANSFER OPERATION

PRIVATE FUEL STORAGE FACILITY
SAFETY ANALYSIS REPORT

FIGURE 5.1-3

(deleted)

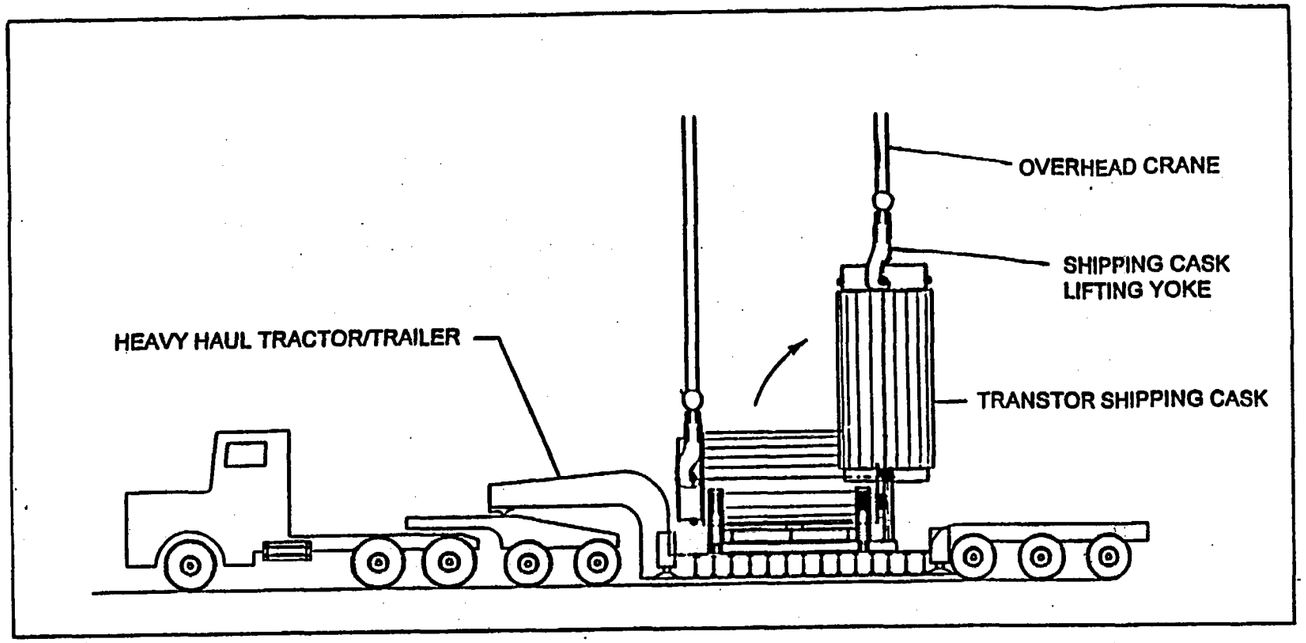

AFTER RECEIPT INSPECTION AND PLACEMENT INTO CANISTER TRANSFER BUILDING, UPRIGHT SHIPPING CASK, LIFT OFF TRAILER, AND MOVE TO TRANSFER CELL

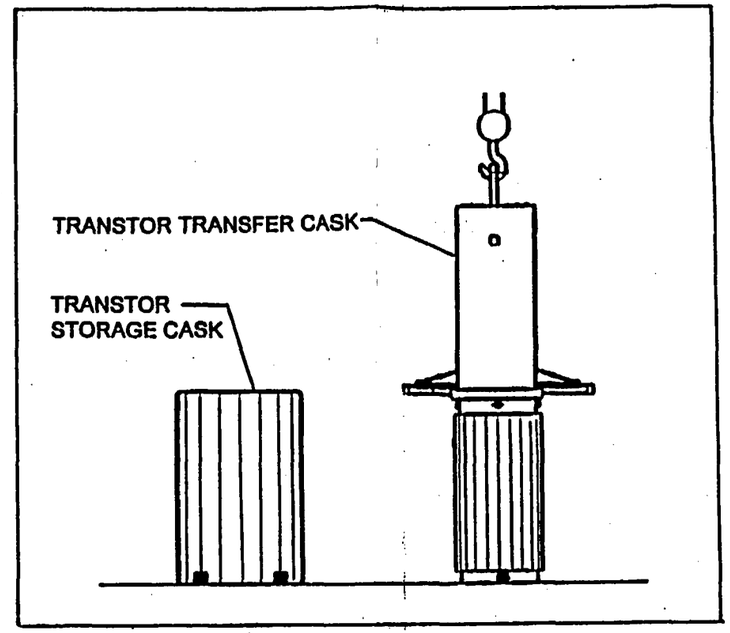

PLACE TRANSFER CASK ON SHIPPING CASK, OPEN HYDRAULIC DOORS, AND RAISE CANISTER INTO TRANSFER CASK VIA CRANE

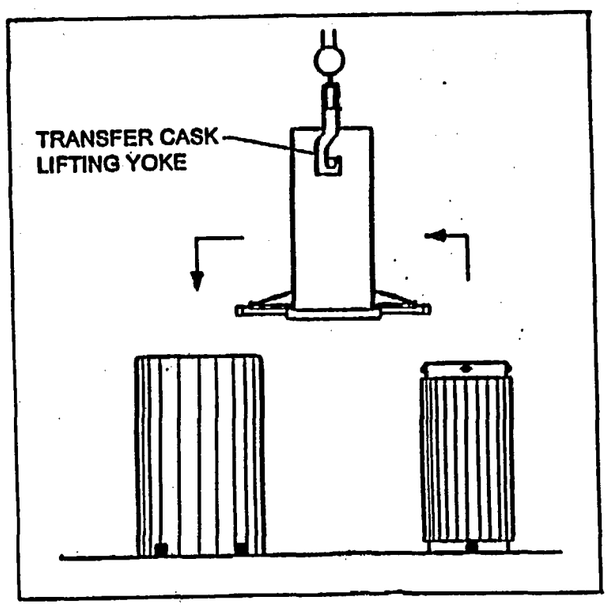

MOVE TRANSFER CASK FROM TOP OF SHIPPING CASK TO TOP OF STORAGE CASK VIA CRANE

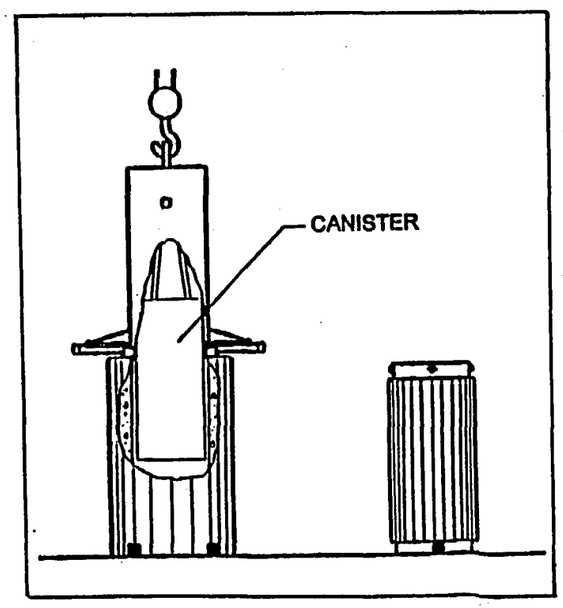

OPEN HYDRAULIC DOORS AND LOWER CANISTER INTO STORAGE CASK. REMOVE TRANSFER CASK AND INSTALL STORAGE CASK LID

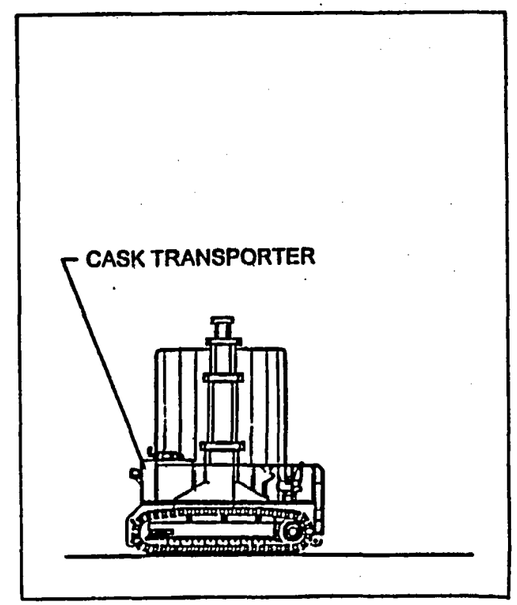

TRANSPORT STORAGE CASK TO STORAGE PAD VIA CASK TRANSPORTER

Figure 5.1-4

TRANSTOR CANISTER TRANSFER OPERATION

PRIVATE FUEL STORAGE FACILITY
SAFETY ANALYSIS REPORT

STORAGE CASK INSPECTION

1. Visually inspect the storage cask on the storage pad for any physical damage. Perform radiation survey. Disconnect temperature monitoring instrumentation.

↓

2. Use the cask transporter to move the storage cask into the Canister Transfer Building.

↓

3. Remove the storage cask cover and visually inspect the top of the canister for any degradation.

↓

CANISTER TRANSFER

4. Install canister lifting devices and lifting slings. Lift and move the transfer cask on top of the storage cask. Open the transfer cask doors.

↓

5. Lift the canister into the transfer cask. Close the transfer cask doors.

↓

6. Move the transfer cask from on top of the concrete storage cask to the top of the shipping cask with the crane.

↓

7. Open the transfer cask doors and lower the canister from the transfer cask into the shipping cask.

↓

8. Remove the transfer cask from the top of the shipping cask and place into storage.

↓

SHIP OFFSITE

9. Install the shipping cask closure lid, fill with helium, and perform leak tests.

↓

10. Check radiation levels of the shipping cask.

↓

11. Place the cask on the heavy haul trailer or rail car, lower the cask to its horizontal transport position, and install the impact limiters, tie downs, and personnel barrier.

↓

12. Transport the shipping cask offsite.

(Note: The exact operational sequence is controlled by PFSF procedures.)

Figure 5.1-5

CANISTER SHIPMENT FROM THE PFSF OFFSITE OPERATIONAL SEQUENCE

PRIVATE FUEL STORAGE FACILITY
SAFETY ANALYSIS REPORT

CHAPTER 6

SITE-GENERATED WASTE CONFINEMENT AND MANAGEMENT

TABLE OF CONTENTS

SECTION	TITLE	PAGE
6.1	ONSITE WASTE SOURCES	6.1-1
6.2	OFFGAS TREATMENT AND VENTILATION	6.2-1
6.3	LIQUID WASTE TREATMENT AND RETENTION	6.3-1
6.4	SOLID WASTES	6.4-1
6.5	RADIOLOGICAL IMPACT OF NORMAL OPERATIONS - SUMMARY	6.5-1
6.6	REFERENCES	6.6-1

THIS PAGE INTENTIONALLY LEFT BLANK

CHAPTER 6

SITE-GENERATED WASTE CONFINEMENT AND MANAGEMENT

6.1 ONSITE WASTE SOURCES

This chapter addresses the requirements for confining and managing any site-generated radioactive wastes in accordance with 10 CFR 72.128(b).

The Private Fuel Storage Facility (PFSF) is designed to a "Start Clean/Stay Clean" philosophy. The spent fuel storage canisters are sealed by welding at the originating nuclear power plants to preclude any leakage of radionuclides.

All spent fuel stored at the PFSF is contained in sealed canisters. Under all normal, off-normal, and credible accident conditions of transport, handling, and storage, the potential does not exist for breach of the canister and release of radioactive material associated with spent fuel from inside the canister.

The potential for radionuclide contamination of the outside surface of the canisters is minimized by using design concepts that preclude intrusion of spent fuel pool water into the annular gap between the transfer cask and the canister while they are submerged in the pool water at the originating nuclear power plants, as described in Chapter 7 of the HI-STAR shipping cask Safety Analysis Report (SAR) (Reference 1) and Chapter 8 of the HI-STORM storage cask SAR (Reference 3). Health physics surveys required to be performed at the originating nuclear power plants, following removal of loaded canisters from the spent fuel pools, include a smear survey to assess removable contamination levels on accessible surfaces of the canister (canister lid and approximately 3 to 6 inches on canister sides down from the lid). In the event removable contamination levels

measured on accessible canister surfaces exceed the criteria specified in the canister vendor's Certificate of Compliance, the canister will not be released for shipment to the PFSF. Canisters with levels of removable contamination above the specified limit must be decontaminated prior to release for transport to the PFSF. The shipping cask externals are also surveyed and decontaminated, as necessary, before the cask leaves the originating nuclear power plants. Radioactive wastes generated during the canister and shipping cask loading operations are processed at the originating nuclear power plants.

After a shipping cask arrives at the PFSF, the shipping manifest is checked and contamination surveys of the outer surfaces of the loaded shipping cask are performed in accordance with the manifest and U.S. Department of Transportation (DOT) regulations (49 CFR 173.443 - Reference 5). Surveys are also performed on the storage cask after the canister is transferred from the shipping cask to the storage cask. Should an off-normal event occur that results in a storage cask becoming contaminated, removal of the contaminants would be conducted using decontamination methods that only result in the generation of dry active wastes. The small amount of dry active waste that may be generated would consist of anti-contamination garments, rags, and associated health physics material. This solid waste would be packaged and temporarily stored in the low-level waste (LLW) holding cell of the Canister Transfer Building until the waste is shipped offsite to a low-level radioactive waste disposal facility.

6.2 OFFGAS TREATMENT AND VENTILATION

There are no gaseous releases from the storage systems utilized at the PFSF. After the canisters are loaded with spent fuel at the originating nuclear power plants, the canisters are vacuum dried, backfilled with helium, welded closed, and tested to verify leak tightness. Potentially contaminated gases that are purged from the canisters during the closure process are handled by the gaseous radioactive waste system at the originating nuclear power plant shipping the fuel. The canisters are ASME Boiler and Pressure Vessel Code Section III vessels designed to remain leak-tight for long-term storage at the PFSF. Under all normal, off-normal, and credible accident conditions of transport, handling, and storage, the potential does not exist for breach of the canister and release of radioactive material associated with spent fuel from inside the canister.

There are no special ventilation systems installed in the PFSF facilities. There are no credible scenarios that would require installation of special ventilation systems to protect against offgas or particulate release.

THIS PAGE INTENTIONALLY LEFT BLANK

6.3 LIQUID WASTE TREATMENT AND RETENTION

Radioactive liquid wastes are not generated at the PFSF. After the canisters are loaded with spent fuel, the canisters are vacuum dried, backfilled with helium, welded closed and tested to verify leak tightness at the originating nuclear power plants. Therefore, there is no potential for leakage of contaminated liquids from the canister internals.

At the originating nuclear power plants, outer surfaces of the shipping casks are surveyed and decontaminated as necessary so that removable contamination concentrations are below the DOT criteria (49 CFR 173.443). Upon receipt of shipping casks at the PFSF, the casks are surveyed to determine radiation and contamination levels. Removable contamination identified on the cask outer surfaces is wiped off with rags or paper wipes that can be disposed of as solid activated waste, preventing the generation of radioactive liquid wastes. This is in accordance with the Private Fuel Storage L.L.C.'s (PFSLLC) policy of preventing generation of liquid radioactive waste.

Drain sumps are provided in the cask load/unload bay of the Canister Transfer Building which catch and collect water that drips from shipping casks (e.g. from melting snow) onto the floor. Water collected in the cask load/unload bay drain sumps is sampled and analyzed to verify it is not contaminated prior to its release. In the event contaminated water is detected, it will be collected in a suitable container, solidified by the addition of an agent such as cement or "Aquaset" so that it qualifies as solid waste, staged in the LLW holding cell while awaiting shipment offsite, and transported to a LLW disposal facility, in accordance with Radiation Protection procedures.

THIS PAGE INTENTIONALLY LEFT BLANK

6.4 SOLID WASTES

All spent fuel stored at the PFSF is contained in sealed canisters. Under all normal, off-normal, and credible accident conditions of transport, handling, and storage, the potential does not exist for breach of the canister and release of radioactive material associated with spent fuel from inside the canister.

There is a potential for the presence of some contamination on the external surfaces of canisters as a result of submergence in spent fuel pools during spent fuel loading operations at the originating nuclear power plants, even though measures are taken to prevent contamination (see Chapter 7 of the HI-STAR shipping SAR). Following fuel loading operations at the originating nuclear power plants, a smear survey is performed to determine removable contamination levels on accessible outer canister surfaces near the top of the canister (canister lid and approximately 3 to 6 inches on canister sides down from the lid). In the event canister removable contamination levels (measured on canister top surfaces) exceed the criteria specified in the canister vendor's Certificate of Compliance, the canister will not be released for shipment to the PFSF. Canisters with levels of removable contamination above the specified limit must be decontaminated prior to release for transport to the PFSF.

Once the shipping cask arrives at the PFSF and its closure is removed, a smear survey of accessible portions of the canister is again performed. If removable surface contamination levels exceed the limits specified in the PFSF Technical Specifications, the canister is returned to the originating nuclear power plant for decontamination.

Even with these measures to assure canister external surfaces are relatively free of removable contamination, contamination surveys are performed on outer surfaces of storage casks, following loading of canisters into the storage casks in the Canister Transfer Building. Under off-normal conditions, such as a canister mishandling event, it is considered possible for removable contamination to be released from the external surfaces of a canister, possibly depositing contamination upon surfaces of the shipping, transfer, or storage casks. Any necessary decontamination of these casks will be performed using dry methods. If such decontamination is necessary, a small quantity of solid LLW may be generated, consisting of smears, disposable clothing, tape, blotter paper, rags, and related health physics material. This material will be collected, identified, packaged in suitable LLW containers (such as standard 55-gallon steel drums that comply with transportation and disposal requirements), marked in accordance with 10 CFR 20 requirements, and temporarily stored in the LLW holding cell of the Canister Transfer Building while awaiting removal to a LLW disposal facility. The LLW holding cell is regularly surveyed and inventoried, including inspection of the materials stored, to evaluate the status of materials and controls (e.g., physical condition of containers, access control, posting).

The volume of solid waste is expected to be minimal since the occurrence of contamination would be due to an off-normal event.

Any wastes that are generated are controlled, stored, and disposed in compliance with the requirements of 10 CFR 20. All solid wastes are packaged for removal to a LLW disposal facility. Packaging complies with requirements specified by 49 CFR 171-177, 10 CFR 71, and the disposal facility criteria, as applicable.

State-of-the art solid radwaste handling equipment and procedures will be used in handling any solid waste generated at the PFSF. The following is an example of the process.

Solid waste, that may be generated during canister transfer operations (including use of the transfer cask), such as smears, cloth rags, wipes, tape and similar decontamination materials, will be placed inside poly bags (yellow) that are inserted into 55-gallon drums. The poly bags will be placed so as to provide a clean surface for personnel to lift up and around to seal the material inside the bags. When the material is placed inside the bags the exposed surface will be tested (smeared) to insure that no loose surface contamination is present. To further insure that loose contamination is not transferred to the exterior of the drum, blotting material will be placed under the drum while material is placed into the poly bags. The poly bag will be double sealed in a reverse fashion whereby the bag is twisted and sealed then the sealed area is turned 180 degrees and sealed again.

The external surface of the 55-gallon drum will be smear tested to ensure no loose surface contamination is present prior to being transferred to a disposal facility. The drum will also receive a radiation survey to ensure that the radiological limits for transfer are met.

Protective clothing used during the decontamination efforts will be removed in a controlled area where there are placed sticky "step off pads" to minimize the potential for transfer of loose surface contamination to the surrounding areas. In this case the initial "step off pad" will be considered as "dirty" in a reverse fashion of commercial industry practices. However, additional "step off pads" will be available and appropriately marked to ensure a clean surface for personnel to exit the area. Training will ensure that personnel are knowledgeable of the difference in the practice and are capable of exiting the area without transferring contamination.

Used protective clothing will be placed in poly bags inside 55-gallon drums similar to the waste material. The handling of these drums will be performed in a similar fashion but will be transferred to a laundry facility for the cloth clothing and a waste facility for the disposable clothing.

The volume of solid waste is expected to be minimal since the occurrence of contamination would be due to an off-normal event. Due to limited expected volume of waste material, provisions are not considered necessary for the volume reduction of waste. However, waste materials will be separated at the source by use of separate containers for waste materials and protective clothing. The waste materials are not expected to require immobilization or change in composition since the expected materials are soft cleaning items that will not require these processes.

Full waste containers will be stored in the Low Level Waste Storage Room in the Canister Transfer Building. The concrete walls and ceiling of this room will provide shielding for the stored waste. This room will be considered a controlled area with restricted access. The use of a separate restricted storage area with concrete wall for shielding will maintain any exposures in the area ALARA. Waste material inside the drums is low level and is not expected to require the use of additional shielding materials around the drums.

6.5 RADIOLOGICAL IMPACT OF NORMAL OPERATIONS - SUMMARY

Radiological impacts at the PFSF are minimized through the health physics program to maintain the "Start Clean / Stay Clean" philosophy and to maintain ALARA principles presented in Regulatory Guide 8.10 (Reference 6). All spent fuel stored at the PFSF is contained in sealed canisters. Under all normal, off-normal, and credible accident conditions of transport, handling, and storage, the potential does not exist for breach of a canister and release of radioactive material associated with spent fuel from inside the canister. No releases of radioactive material to the environment are expected during normal facility operations and there are no radioactive gaseous or liquid effluents from the PFSF. Solid radioactive wastes are stored in suitable containers in the LLW holding cell of the Canister Transfer Building while awaiting shipment offsite to a LLW disposal facility. These wastes have negligible impact on the environment. The off-normal condition involving postulated release of removable surface contamination from a canister exterior from an event involving canister impact such as canister mishandling is evaluated in Section 8.1.5. This evaluation conservatively assumes that the entire outer surface of a canister is covered with Co-60 contamination at the maximum concentration permitted by the PFSF Technical Specifications, and that 100 percent of this radioactivity is removed from the canister and becomes airborne in respirable size particles. Doses to an individual at the owner controlled area (OCA) boundary from this worst case scenario are shown to be below 0.1 mrem. As such, the radiological impacts to the environment from normal operations at the PFSF (including off-normal conditions) are negligible.

Radiological impacts of the PFSF are summarized as follows:

- Shipping and Canister Transfer Operations - Under normal operating conditions, during receipt of the shipping cask, canister transfer operations, and movement of the loaded storage cask to the storage pad, no releases of

radioactivity are expected to occur. As discussed above, the potential exists for small amounts of removable contamination deposited on the canister external surfaces from handling in the originating nuclear power plant spent fuel pool to be transferred from the canister onto the shipping, transfer, or storage casks. This contamination would be detected by smear surveys and removed using dry paper wipes or rags, producing small quantities of solid radioactive waste. There would be no radiological impact to locations outside of the restricted area or to members of the public as a result of this contamination. Constraints and equipment used to ensure as low as is reasonably achievable (ALARA) conditions while processing the contamination include storage in LLW containers, and removal of the LLW from the PFSF.

- Spent Fuel Storage - During spent fuel storage, no releases of any type of radioactive material occur. Therefore, there are no radiological waste impacts from the storage of spent fuel.

6.6 REFERENCES

1. Topical Safety Analysis Report for the Holtec International Storage, Transport, and Repository Cask System, (HI-STAR 100 Cask System), Holtec Report HI-951251, Docket 71-9261, Revision 9, April 2000.

2. (deleted)

3. Final Safety Analysis Report for the Holtec International Storage and Transfer Operation Reinforced Module Cask System (HI-STORM 100 Cask System), Holtec Report HI-2002444, NRC Docket No.72-1014, Revision 0, July 2000.

4. (deleted)

5. 49 CFR 173, Shippers - General Requirements for Shipments and Packagings.

6. NRC Regulatory Guide 8.10, Operating Philosophy for Maintaining Occupational Radiation Exposures As Low As Is Reasonably Achievable, Rev. 1R, September 1975.

THIS PAGE INTENTIONALLY LEFT BLANK

CHAPTER 7

RADIATION PROTECTION

TABLE OF CONTENTS

SECTION	TITLE	PAGE
7.1	ENSURING THAT OCCUPATIONAL RADIATION EXPOSURES ARE AS LOW AS IS REASONABLY ACHIEVABLE (ALARA)	7.1-1
7.1.1	Policy Considerations	7.1-1
7.1.2	Design Considerations	7.1-4
7.1.3	Operational Considerations	7.1-9
7.2	RADIATION SOURCES	7.2-1
7.2.1	Characterization of Sources	7.2-1
7.2.1.1	Fuel Region Gamma Source	7.2-2
7.2.1.2	Non-Fuel Region Gamma Source	7.2-3
7.2.1.3	Neutron Source	7.2-4
7.2.2	Airborne Radioactive Material Sources	7.2-5
7.3	RADIATION PROTECTION DESIGN FEATURES	7.3-1
7.3.1	Installation Design Features	7.3-1
7.3.2	Access Control	7.3-3b
7.3.3	Shielding	7.3-4
7.3.3.1	Shielding Configurations	7.3-5
7.3.3.2	Shielding Evaluation	7.3-6
7.3.3.3	Dose Rates for a Single Storage Cask	7.3-7

TABLE OF CONTENTS (cont.)

SECTION	TITLE	PAGE
7.3.3.4	Dose Rates for a Transfer Cask	7.3-7
7.3.3.5	Dose Rates at Distances from the PFSF Array of Storage Casks	7.3-8
7.3.4	Ventilation	7.3-13
7.3.5	Area Radiation and Airborne Radioactivity Monitoring Instrumentation	7.3-14
7.4	ESTIMATED ONSITE COLLECTIVE DOSE ASSESSMENT	7.4-1
7.5	RADIATION PROTECTION PROGRAM	7.5-1
7.5.1	Organization	7.5-1
7.5.2	Equipment, Instrumentation, and Facilities	7.5-2
7.5.3	Procedures	7.5-5
7.6	ESTIMATED OFFSITE COLLECTIVE DOSE ASSESSMENT	7.6-1
7.6.1	Effluent and Environmental Monitoring Program	7.6-2
7.6.2	Analysis of Multiple Contributions	7.6-2
7.6.3	Estimated Dose Equivalents From Effluents	7.6-3
7.6.4	Liquid Release	7.6-4
7.7	REFERENCES	7.7-1

TABLE OF CONTENTS (cont.)

LIST OF TABLES

TABLE	TITLE
7.3-1	MAXIMUM DOSE RATES ON CONTACT AND AT ONE METER FROM A HI-STORM STORAGE CASK
7.3-2	(deleted)
7.3-3	MAXIMUM DOSE RATES ASSOCIATED WITH A 125-TON HI-TRAC TRANSFER CASK
7.3-4	(deleted)
7.3-5	DOSE RATES VERSUS DISTANCE FOR A SINGLE HI-STORM STORAGE CASK
7.3-6	(deleted)
7.3-7	DOSE RATES AT LOCATIONS OF INTEREST FROM THE PFSF ARRAY OF 4,000 ASSUMED HI-STORM STORAGE CASKS
7.3-8	(deleted)

TABLE OF CONTENTS (cont.)

LIST OF TABLES (cont.)

TABLE	TITLE
7.4-1	ESTIMATED PERSONNEL EXPOSURES FOR HI-STORM CANISTER TRANSFER OPERATIONS (4 pages)
7.4-2	(deleted) (4 pages)

TABLE OF CONTENTS (cont.)

LIST OF FIGURES

FIGURE	TITLE
7.3-1	STORAGE CASK CALCULATED DOSE RATE LOCATIONS
7.3-2	TRANSFER CASK CALCULATED DOSE RATE LOCATIONS

THIS PAGE INTENTIONALLY LEFT BLANK

CHAPTER 7

RADIATION PROTECTION

7.1 ENSURING THAT OCCUPATIONAL RADIATION EXPOSURES ARE AS LOW AS IS REASONABLY ACHIEVABLE (ALARA)

The objective for the Private Fuel Storage Facility (PFSF) Radiation Protection Program is to keep radiation exposures to facility workers and the general public as low as is reasonably achievable (ALARA). Section 7.1.1 describes the policy and procedures that ensure that ALARA occupational exposures are achieved. Section 7.1.2 describes the ALARA design considerations and Section 7.1.3, the ALARA operational considerations.

7.1.1 Policy Considerations

A Radiation Protection Program will be implemented at the PFSF in accordance with requirements of 10 CFR 72.126, 10 CFR 20.1101, and 10 CFR 19.12 (References 1, 2, and 3). The program will draw upon the experience and expertise of programs and personnel of the Private Fuel Storage L.L.C. (PFSLLC) member utilities.

The primary goal of the Radiation Protection Program is to minimize exposure to radiation such that the individual and collective exposure to personnel in all phases of operation and maintenance are kept ALARA. This is accomplished by integrating ALARA concepts into design, construction, and operation of the facility.

Trained personnel will develop and conduct the Radiation Protection Program and will assure that procedures are followed to meet PFSLLC and regulatory requirements. Training programs in the basics of radiation protection and exposure control will be provided to all facility personnel whose duties require working in radiation areas.

Basic objectives of the ALARA program are:

1. Protection of personnel, including surveillance and control over internal and external radiation exposure to maintain individual exposures within permissible limits and ALARA, and to keep the annual integrated (collective) dose to facility personnel ALARA.

2. Protection of the public, including surveillance and control over all conditions and operations that may affect the health and safety of the public.

The radiation protection staff is responsible for and has the appropriate authority to maintain occupational exposures as far below the specified limits as reasonably achievable. Ongoing reviews will be performed to determine how exposures might be reduced. The program will ensure that PFSF personnel receive sufficient training and that radiation protection personnel have sufficient authority to enforce safe facility operation. Periodic training and exercises will be conducted for management, radiation workers, and other site employees in radiation protection principles and procedures, protective measures, and emergency responses. Revisions to operating and maintenance procedures and modifications to PFSF equipment and facilities will be made when the proposed revisions will substantially reduce exposures at a reasonable cost. The program will also ensure that adequate equipment and supplies for radiation protection work are provided.

The PFSLLC is committed to a strong ALARA program. The ALARA program follows the guidelines of Regulatory Guides 8.8 (Reference 4) and 8.10 (Reference 5) and the requirements of 10 CFR 20 (Reference 2). Management is committed to compliance with regulatory requirements regarding control of personnel exposures and will establish and maintain a comprehensive program at the PFSF to keep individual and collective doses ALARA. Management will assure that each staff member integrates appropriate

radiation protection controls into work activities. PFSF personnel will be trained and updated on ALARA practices and dose reduction techniques to assure that each individual understands and follows procedures to maintain his/her radiation dose ALARA. Design, operation, and maintenance activities will be reviewed to ensure ALARA criteria are met.

The ALARA program will ensure that:

1. An effective ALARA program is administered at the PFSF that appropriately integrates management philosophy and NRC regulatory requirements and guidance.

2. PFSF design features, operating procedures, and maintenance practices are in accordance with ALARA program guidelines. Formal periodic reviews of the Radiation Protection Program will assure that objectives of the ALARA program are attained.

3. Pertinent information concerning radiation exposure of personnel is reflected in design and operation.

4. Appropriate experience gained during the operation of nuclear power stations relative to radiation control is factored into procedures, and revisions of procedures, to assure that the procedures continually meet the objectives of the ALARA program.

5. Necessary assistance is provided to ensure that operations, maintenance, and decommissioning activities are planned and accomplished in accordance with ALARA objectives.

6. Trends in PFSF personnel and job exposures are reviewed to permit corrective actions to be taken with respect to adverse trends.

PFSF personnel will be responsible for ensuring that activities are planned and accomplished in accordance with the objectives of the ALARA program. Staff will ensure that procedures and their revisions are implemented in accordance with the objectives of the ALARA program, and that radiation protection staff is consulted as necessary for assistance in meeting ALARA program objectives. Individual radiation doses, and collective doses associated with tasks controlled by radiation work permits, will be tracked to identify trends and support development of alternative procedures that result in lower doses.

7.1.2 Design Considerations

ALARA considerations have been incorporated into the PFSF design, in accordance with 10 CFR 72.126(a), based upon the layout of the PFSF area and the type of spent fuel storage system selected. The following summarizes the design considerations:

- The peripheral storage pads are located 150 ft (45.7 meters) from the Restricted Area (RA) fence and 2,119 ft (646 meters) from the owner controlled area (OCA) boundary at their closest locations. This provides an acceptable distance from radiation sources to offsite personnel to ensure dose rates at the OCA boundary are minimized and maintained within specified limits.

- The storage pads have been sized to allow adequate spacing between storage casks to permit workers to function efficiently during placement/removal of storage casks at the pads and during performance of maintenance (e.g. clearing blockage from the inlet ducts) and surveillances. Adequate work space helps to minimize time spent by workers in the vicinity of storage casks, limiting worker dose.

- The storage system design is based on a metal canister that is sealed by welding for spent fuel confinement, preventing release of radionuclides from inside the canister. Radioactive effluents are thus precluded by design. This meets the intent of 10 CFR 72.126(d), which requires that the ISFSI design provide means to limit the release of radioactive materials in effluents during normal operations to levels that are ALARA. There are no radioactive effluents released from the PFSF during normal operations. This passive system design also requires minimum maintenance and surveillance requirements by personnel.

- The data acquisition of the storage cask temperature monitoring system enables remote readout of temperatures representative of cask thermal performance, avoiding time spent by PFSF staff to perform daily walkdowns, or take measurements, or read instrumentation in the vicinity of the storage casks.

- Holtec International (Holtec), the vendor for the spent fuel storage system, has incorporated a number of design features to provide ALARA conditions during transportation, handling, and storage as described in its HI-STORM Safety Analysis Report (Reference 6).

- Where practical, power operated wrenches will be used to reduce the times associated with tasks involving bolt insertion and removal during shipping cask receipt and canister transfer operations. This will minimize time spent in radiation fields. Temporary shielding will be used where it is determined to be effective in reducing total dose for a task (considering doses to personnel involved in its installation and removal).

- Solid low-level waste (LLW) generated during operations is packaged and stored in LLW containers in a LLW holding cell within the Canister Transfer Building.

Regulatory Position 2 of Regulatory Guide 8.8, is incorporated into design considerations, as described below:

- Regulatory Position 2a on access control is met by use of a fence with a locked gate that surrounds the PFSF RA and prevents unauthorized access.

- Regulatory Position 2b on radiation shielding is met by the heavy shielding of the shipping, storage, and transfer casks which minimizes personnel exposures during shipping cask reception, canister transfer, canister storage, and offsite shipment operations. The designs of the storage cask air inlet and outlet ducts prevent direct radiation streaming. Each of the transfer cells within the Canister Transfer Building has thick concrete walls, with a substantial steel roller door, designed to shield personnel in adjacent transfer cells and in the main bay of the Canister Transfer Building from relatively high dose rates that could be associated with the canister transfer operations. The designs of the shipping, storage, and transfer casks assure adequate shielding for personnel inside the transfer cells to accomplish the transfer operation with dose rates ALARA.

The Canister Transfer Building itself is located approximately 425 ft (130 meters) from the nearest storage pad. It has reinforced concrete walls and roof designed to withstand tornado-driven missiles. The walls and roof provide substantial shielding of gamma and neutron radiation emitted from the sides (direct) and tops (scattered) of storage casks in the cask storage area. The Security and Health Physics Building is located approximately 948 ft (289 meters) from the nearest storage pad, and approximately 396 ft (121 meters) from the Canister Transfer Building. Shielding provided by the walls and roof of this structure reduce dose rates from the cask storage area to security and radiation protection personnel who will spend a large fraction of their working hours in this building. The Administration Building is located approximately 2,580 ft (786 m) and the Operations and Maintenance Building is located approximately 1,960 ft (597 m) from the nearest storage pad. Dose rates are sufficiently low at these distances such that the buildings do not require shielding to assure dose rates are ALARA to personnel in the buildings.

- Regulatory Position 2c on process instrumentation is met since the cask temperature monitoring system will utilize a data acquisition system to record cask temperature instrumentation readings, avoiding time spent by PFSF staff to make daily cask vent blockage surveillances and to read instrumentation in the vicinity of the storage casks.

- Regulatory Position 2d on control of airborne contaminants is not applicable because gaseous releases are precluded by the sealed canister design. No surface contamination is expected on the outer surfaces of the canister since process controls are maintained during fuel loading into the canister at the originating nuclear power plants. Assuming the outer surfaces of a canister have removable Co-60 contamination at the maximum levels permitted by

the PFSF Technical Specifications, and all of this is postulated to be released into the Canister Transfer Building atmosphere, general area radionuclide concentrations in the Canister Transfer Building would not exceed 10 CFR 20 Appendix B, Table 1, allowable airborne concentrations for occupational workers.

- Regulatory Position 2e on crud control is not applicable to the PFSF because there are no systems at the PFSF that could produce crud.

- Regulatory Position 2f on decontamination is met because the internal surfaces of shipping, transfer, and storage casks have hard surfaces that lend themselves to decontamination by wiping. Surfaces of the transfer cells' walls and floors are painted with a special paint that is easily decontaminated.

- Regulatory Position 2g on radiation monitoring is met with the use of area radiation monitors in the Canister Transfer Building for monitoring general area dose rates from the casks and canisters during canister transfer operations, and with thermoluminescent dosimeters (TLDs) along the perimeters of the RA and OCA to provide information on radiation doses. Continuous air monitors will be located in the exhaust of each canister transfer cell.

- Regulatory Position 2h on resin treatment systems is not applicable to the PFSF because there will not be any radioactive systems containing resins.

- Applicable portions of Regulatory Position 2i concerning other miscellaneous ALARA items is met because PFSF features provide a favorable working environment and promote efficiency (paragraph 2i(13)). These include:

adequate lighting in the Canister Transfer Building, including in the canister transfer cells, and on the storage pads; adequate ventilation in the Canister Transfer Building; adequate working space in the Canister Transfer Building and at the storage pads; and accessibility - with platforms or scaffolding and ladders that facilitate ready access to the tops of the shipping casks and storage casks and to the transfer cask doors where operators need to perform tasks during canister transfer operations. Regulatory Position 2i(15) is met because the emergency lighting system is adequate to permit prompt egress from any high radiation areas that could possibly exist in the vicinity of the canister/casks during canister transfer operations.

7.1.3 Operational Considerations

Specific PFSF operational considerations to achieve ALARA conditions are as follows:

- Fuel loading operations take place at the originating nuclear power plants, away from the PFSF. There are no fuel assembly handling operations at the PFSF.

- No surface contamination is expected on the canisters as the result of controls applied during the fuel loading operations at the originating nuclear power plants. Workers will therefore not be exposed to surface contamination or airborne contamination during canister transfer operations.

- Canister transfer between the shipping cask and the storage cask will take place within a shielded transfer cask.

- Prior to canister transfer operations, "dry runs" will be performed to train personnel on canister transfer procedures, discuss methods to minimize exposures, and refine procedures to achieve minimum probable exposures.

- The PFSF procedures and work practices will reflect ALARA lessons learned from other ISFSIs that use dry cask storage, as applicable.

- Operations research will be performed to determine types of tools, portable shielding, and equipment that will help to minimize exposures to workers involved in canister transfer operations.

- The overhead bridge crane and the semi-gantry crane, located in the Canister Transfer Building, are both single-failure-proof and are designed to withstand the design basis ground motion, as described in Chapter 4. The overhead bridge crane, whose range of travel covers the length and width of the Canister Transfer Building, including the transfer cell area, handles the shipping casks and moves the shipping casks into and out of the transfer cells. It can also be used to lift a transfer cask, a canister, or a storage cask, as necessary. The semi-gantry crane is designed to serve the transfer cells, and is used to lift the transfer casks and canisters during the canister transfer operations. Operation of these cranes during canister transfer operations is discussed in Chapter 5. The HI-STORM canister is handled by the canister downloader, which is also a single-failure-proof lifting device. The cranes and lifting devices used during the canister transfer operation comply with single-failure criteria to avoid a cask or canister drop.

- A self-propelled cask transporter is used to move storage casks from the Canister Transfer Building to the storage pads. The cask transporter requires

minimum personnel and allows for quick and accurate placement of a storage cask.

- The storage casks are spaced on the storage pads with sufficient tolerance to facilitate ease of placement operations and minimize the time spent by operators near adjacent casks.

- The storage systems do not require any systems that process liquids or gases or contain, collect, store, or transport radioactive liquids. Therefore, there are no such systems to be maintained or operated. Any solid radioactive waste collected during canister transfer operations will be temporarily staged in steel drums in a holding cell in the Canister Transfer Building while awaiting shipping offsite, as described in Section 6.4.

- As discussed in Section 7.5.2, any water collected in the Canister Transfer Building shipping cask load/unload bay drain sumps is sampled and analyzed to verify it is not contaminated prior to its release. If contaminated water is detected, it will be collected in a suitable container, solidified by the addition of a suitable compound, staged in a holding cell while awaiting shipment offsite, and shipped offsite as solid waste in accordance with Radiation Protection procedures.

Regulatory position 4 of Regulatory Guide 8.8 is met with the use of area radiation monitors in the Canister Transfer Building and TLDs around the RA and OCA boundaries. In addition, radiation protection personnel will use portable monitors during shipping cask receipt, inspection, and canister transfer operations, and the operating staff will have personal dosimetry (Section 7.5.2). Continuous air monitors will be located in the exhaust of each canister transfer cell (Section 7.3.5). The access control point will be at the Security and Health Physics Building, as described in Section 7.5.2.

Protective equipment, including anti-contamination clothing and respirators, will be available in the Security and Health Physics Building and controlled by radiation protection personnel. Airborne monitoring will be performed using portable monitors as needed. A low-radiation background counting room is included in the Security and Health Physics Building.

Regulatory Guide 8.10 is incorporated into the PFSF operational considerations as described below:

1. Facility personnel are made aware of management's commitment to keep occupational exposures ALARA.
2. Ongoing reviews are performed to determine how exposures might be lowered.
3. There is a well-supervised radiation protection capability with specific, defined responsibilities.
4. Facility workers receive sufficient training.
5. Sufficient authority to enforce safe facility operation is provided to radiation protection personnel.
6. Modification to operating and maintenance procedures and to equipment and facilities are made where they substantially reduce exposures at a reasonable cost.
7. The radiation protection staff understands the origins of radiation exposures in the facility and seeks ways to reduce exposures.
8. Adequate equipment and supplies for radiation protection work are provided.

7.2 RADIATION SOURCES

The PFSF radiological shielding evaluation is based on the vendor's cask designs and its associated radiological source term and dose evaluations. The following discussion summarizes the assessments. The vendor's source terms bound fuel that will be stored at the PFSF. For more complete information, refer to the Holtec storage system SAR (Reference 6).

7.2.1 Characterization of Sources

The vendor determined source data for several types of spent fuel having differing characteristics (i.e. burnup, cooling time).

Holtec performed multiple calculations using the SAS2H and ORIGEN-S modules of the SCALE 4.3 system to confirm that the B&W 15X15 pressurized water reactor (PWR) and the GE 7X7 boiling water reactor (BWR) assemblies, the fuel assemblies with the highest UO_2 mass, have source strengths that bound all other PWR and BWR fuel assemblies. The design basis damaged fuel is GE 6X6. Holtec used these codes to determine the gamma and neutron source data for these fuels with the following assumed characteristics:

HI-STORM PWR Reference Intact Fuel

45 GWd/MTU	40 GWd/MTU
5-yr cooled	8-yr cooled
(Zircaloy clad)	(Stainless steel clad)

HI-STORM BWR Reference Intact Fuel

45 GWd/MTU	22.5 GWd/MTU
5-yr cooled	10-yr cooled
(Zircaloy clad)	(Stainless steel clad)

HI-STORM BWR Reference Failed Fuel

30 GWd/MTU

18-yr cooled

The HI-STORM reference fuels include intact Zircaloy and stainless steel clad fuels and failed BWR fuel described in HI-STORM SAR Tables 5.2.1 through 5.2.3. The reference fuel assemblies listed in these tables, and having the characteristics noted above, produce the highest neutron and gamma sources and the highest decay heat load. Reference failed BWR fuel listed produces the highest total neutron and gamma sources from the failed fuel assemblies at Dresden 1 and Humboldt Bay. Analyses are presented in the HI-STORM SAR which demonstrate that the storage of failed fuel in the HI-STORM storage system is bounded by the BWR intact fuel analyses during normal and accident conditions. Since lower enrichments produce higher gamma and neutron source terms for fuel having the same burnup and cooling time (with the neutron source more sensitive to enrichment), Holtec assumed enrichments of 3.6 percent for the PWR intact fuel and 3.2 percent for the BWR intact fuel, which are below the average enrichments normally used to obtain the burnups analyzed. An enrichment of 2.24 percent was used to describe the damaged fuel. A single full power cycle was used in the model to achieve the desired burnups. The results of gamma and neutron source determination are described in the sections that follow.

7.2.1.1 Fuel Region Gamma Source

The fuel region gamma source includes gammas originating from fission products, actinides, and activated materials in the active fuel region.

HI-STORM gamma source terms for the active fuel region and the remainder of the fuel assembly were computed by the SAS2H and ORIGEN-S modules of the SCALE 4.3 system and are given in HI-STORM SAR Tables 5.2.5 through 5.2.9 for the reference PWR and BWR fuel assemblies, including intact Zircaloy and stainless steel clad fuels, and damaged BWR fuel. Energies in the range of 0.45 to 3.0 MeV were used in the

shielding calculations. As discussed in Section 5.2.1 of the HI-STORM SAR, gamma energies below 0.45 MeV are too weak to penetrate the storage or transfer casks and gamma energies above 3.0 MeV are too few to contribute significantly to external dose. Methodology used by Holtec to account for the gamma source from activated non-fuel components in the fuel region is described in Chapter 5 of the HI-STORM SAR.

The stainless steel clad fuel has a higher source in the 1.0 to 1.5 MeV energy range due to cobalt activation. However, the Zircaloy clad fuel has a higher source in all other energy groups. The photons/sec in the higher energy groups and the total photons/sec for the Zircaloy fuel are higher than the values for the stainless steel fuel. As noted below, the neutron source strengths for the Zircaloy clad fuels were shown to bound those for the stainless clad fuels.

7.2.1.2 Non-Fuel Region Gamma Source

The gamma sources for the non-fuel regions of a fuel assembly are almost entirely due to Co-60 in activated metal components. The non-fuel region component masses identified in HI-STORM SAR Table 5.2.1 (based on References 10, 11, and 22) were used to obtain assumed masses of steel for various components, which are larger than those of most fuel assemblies. A high concentration of cobalt in steel was conservatively assumed to arrive at an initial Co-59 impurity level. The grams of impurity were then input to ORIGEN-S to calculate Co-60 activation levels for various burnups and decay times, using methodology developed from Reference 9. The ORIGEN-S runs were based on core region flux levels for full power operation. This calculated Co-60 activation level for the active fuel region was then modified by appropriate scaling factors from Reference 9, which reflect the lower neutron fluxes at the tops and bottoms of a fuel assembly. HI-STORM SAR Table 5.2.10 provides the scaling factors that were used to calculate the Co-60 activation of different components in PWR and BWR fuel assemblies. HI-STORM SAR Tables 5.2.12 and 5.2.13 identify the Curies of Co-60 calculated in various regions of the reference fuel assemblies for

Zircaloy and stainless steel clad fuels. These regions include, for PWR fuel, the lower end fitting, gas plenum springs, gas plenum spacer, incore grid spacers, and upper end fitting; and for BWR fuel, the lower end fitting, gas plenum springs, expansion springs, grid spacer springs, the upper end fitting, and the handle.

7.2.1.3 Neutron Source

Neutrons are produced in the active fuel region by spontaneous fission sources from various actinides and alpha/neutron reactions. The primary neutron source is the spontaneous fission of Cm-244. HI-STORM neutron sources for the PWR and BWR fuels, determined using the SAS2H and ORIGEN-S codes, are shown in HI-STORM SAR Tables 5.2.16 through 5.2.20. These tables present the neutron sources for HI-STORM reference fuels, including intact Zircaloy and stainless steel clad fuels and damaged BWR fuel. The neutron source strengths for the Zircaloy clad fuels are greater than the source strengths for the stainless steel clad fuels, for all neutron energy groups.

Unlike the gamma source spectrum, the neutron source spectrum does not vary significantly with fuel burnup level or cooling time. Holtec assumed enrichments of 3.6 percent for the PWR fuel and 3.2 percent for the BWR fuel, which are below the average enrichments normally used to obtain the burnups analyzed, as indicated in the OCRWM LWR Database (Reference 8). Low initial enrichments are assumed since the neutron source strength increases substantially as initial enrichment decreases for LWR fuel of a given burnup.

7.2.2 Airborne Radioactive Material Sources

Loading of spent fuel into the canisters takes place at the originating nuclear power plants where procedures are in place to prevent the spread of contamination. The canisters are dried and seal welded within the controlled environment of the originating nuclear power plant. Once the canister is dried and seal welded, there are no credible off-normal events or accidents that will cause breach of the canister and thus no credible releases of airborne radioactivity from the spent fuel assemblies.

During normal operation of the PFSF, the only potential source of airborne radioactivity is from loose surface contamination on the canister exterior, which could potentially be deposited there during fuel loading operations. However, measures are implemented at the originating nuclear power plants to prevent contaminating the canisters. For wet transfers in spent fuel pools utilizing the HI-STORM system, an inflatable seal is placed in the annulus between the canister and the HI-TRAC transfer cask and the annulus is filled with demineralized water prior to submerging the empty transfer cask/canister in the pool. The seal prevents contaminated spent fuel pool water from entering the annulus and contaminating the outer surface of the canister. The outside of the transfer cask is washed down after being lifted out of the spent fuel pool to remove loose surface contamination. For dry transfers, it is less likely for contamination of the canister to occur since the fuel loading process is done outside of the pool.

Following fuel loading operations at the originating nuclear power plants, a smear survey is performed to determine removable contamination levels on accessible outer canister surfaces near the top of the canister (canister lid and approximately 3 to 6 inches along canister sides down from the lid). In the event canister removable contamination levels (measured on canister top surfaces) exceed the criteria specified in the canister vendor's Certificate of Compliance, the canister will not be released for shipment to the PFSF. Canisters with unacceptable levels of removable contamination must be decontaminated prior to release for transport to the PFSF. Once the shipping

cask arrives at the PFSF and its closure is removed, a smear survey of accessible portions of the canister is again performed. If removable surface contamination levels on the top of the canister exceed the limits specified in the PFSF Technical Specifications (22,000 dpm/100 cm^2 beta/gamma and 2,200 dpm/100 cm^2 alpha), the canister is returned to the originating nuclear power plant for decontamination.

Section 8.1.5 evaluates doses resulting from an off-nomal event involving the postulated release of Co-60 contamination assumed to cover the entire exterior surface of a canister at a concentration of 1.0 E-4 $\mu Ci/cm^2$ (approximately 22,000 dpm/100 cm^2). The evaluation concludes that the consequences of such a release to an individual at a distance of 492 ft (150 meters) would be 0.03 mrem committed effective dose equivalent, with lower doses at the OCA boundary, a distance of 1,640 ft (500 meters) from the Canister Transfer Building at its nearest point.

Section 8.2.7 evaluates canister leakage under hypothetical accident conditions, conservatively assuming cladding rupture of all the fuel rods within the canister, and release of conservative fractions of fission and activation products from the fuel and canister. The doses calculated to result from this hypothetical accident are below the 5 rem total effective dose equivalent regulatory limit specified in 10 CFR 72.106 (b) at the OCA boundary.

7.3 RADIATION PROTECTION DESIGN FEATURES

7.3.1 Installation Design Features

A description of the PFSF layout and design is provided in Section 4.1. The PFSF layout and design are in accordance with the facility and equipment design features identified in Position 2 of Regulatory Guide 8.8, as described in Section 7.1.2.

The PFSF has the following design features that ensure that exposures are ALARA:

- The site is located far from population centers. The distance to the nearest town is over 10 miles. The military town of Dugway, with a population of approximately 1,700, is located about 12 miles south of the PFSF. Terra, a small residential community of about 120 people, is located 10 miles east-southeast of the PFSF. There are about 36 residents within a 5-mile radius of the PFSF.

- The only sources of radiation at the PFSF are the sealed canisters containing spent fuel assemblies. These canisters will always be shielded by shipping, storage or by transfer casks during canister transfer operations.

- Low-level radioactive waste will be packaged and staged in LLW containers in the LLW holding cell (discussed in Chapter 6) while awaiting shipment to a LLW disposal site. Because of the low activity inventory associated with any LLW, dose rates on the outer surfaces of the LLW containers are expected to be negligible.

- Measures are taken at the originating nuclear power plants to prevent loose surface contamination levels on the exterior of the canisters, as discussed in

Section 7.2.2. Controls assure that canisters are not transported to the PFSF unless contamination levels are within specified limits.

- The canisters will be sealed by welding, eliminating the potential for release of radioactive gases or particles.

- The canisters will not be opened, nor will spent fuel assemblies be unloaded at the PFSF.

- The fuel will be stored dry inside the canisters, so that no radioactive liquid is available for release.

- The shipping, transfer, and storage casks are heavily shielded to minimize external dose rates.

- The PFSF site layout provides substantial distance between the cask storage area and the OCA boundary, minimizing radiation exposures to individuals outside the OCA and assuring offsite dose rates are well below the 10 CFR 72.104 criteria. The closest distance from a storage pad to the OCA boundary is 2,119 ft (646 meters).

- The Administration Building is located approximately 2,580 ft (786 m) and the Operations and Maintenance Building is located approximately 1,960 ft (597 m) from the nearest storage pad. These distances provide separation of radioactive material handling and storage functions from other functions on the site. The Security and Health Physics Building, located near the storage area to maintain security and radiological access control, is provided with radiation shielding, as is the Canister Transfer Building.

- The location of the Canister Transfer Building inside the RA minimizes the route between the handling facility and storage pads, provides for minimal other traffic on the route, and maintains substantial distance from the OCA boundary.

- There are no radioactive liquid wastes associated with the PFSF.

As shown in Section 7.3.3.5, the design of the PFSF assures that dose rates at the OCA fence are sufficiently low that individuals at the fence will not exceed 25 mrem per year whole body dose, in compliance with the requirements of 10 CFR 72.104.

The PFSF building ventilation systems are not designed for any special radiological considerations since there is no credible scenario for which a significant radioactive release could occur. Shielding of the canisters is provided by the storage casks and by the shipping and transfer casks during canister receipt, transfer and, offsite shipping operations. Shielding is provided in the design of the Canister Transfer and the Security and Health Physics Buildings for additional radiation dose protection.

The general area inside the RA fence is a restricted area, as defined by 10 CFR 20, and will be controlled in accordance with applicable requirements of 10 CFR 20, with personnel dosimetry required. Certain areas within the RA will be designated as Radiation Areas, and specific locations within the RA have the potential to be High Radiation Areas, and will be posted and controlled in accordance with applicable requirements of 10 CFR 20. The cask load/unload bay, crane bay, cask transporter bay, and canister transfer cells inside the Canister Transfer Building will be designated as Radiation Areas whenever loaded canisters are present in these areas, since the potential exists for dose rates to exceed 5 mrem/hr in these areas. Upon removal of the impact limiters from the shipping casks in the cask load/unload bay of the Canister

Transfer Building, the potential exists for dose rates in the vicinity of the top and/or bottom of the casks to exceed 100 mrem/hr in localized areas, and these localized areas will be posted as High Radiation Areas, with necessary controls applied. The external walls of the Canister Transfer Building, adjacent to the east, south, and west sides of the cask load/unload bay, are 2 ft thick concrete, with steel roller bay doors in the truck/rail entrance/exits at the east and west ends of the bay. Due to distances from the shipping casks when their impact limiters are removed, dose rates outside the Canister Transfer Building will be well below 100 mrem/hr. The concrete walls of the cask load/unload bay, and steel roller bay doors, will reduce dose rates outside the building to levels as low as is reasonably achievable.

It is anticipated that the canister transfer cells within the Canister Transfer Building (Figure 4.7-1) will be posted as High Radiation Areas during canister transfer operations, since the dose rates in the cells could potentially exceed 100 mrem/hr in localized areas 30 cm from cask surfaces. Due to distances from cask surfaces into the crane bay, cask transporter bay, and areas external to the Canister Transfer Building, dose rates will be well below 100 mrem/hr without credit for the shield walls that surround the canister transfer cells. The north wall of cell no. 1 (an external wall), and the west cell walls of all three cells (adjacent to the cask transporter bay), will be 2 ft thick concrete. The walls between the cells, the south wall of cell no. 3, and the east walls of all three cells, will be 1 ft thick concrete. The sliding doors will be steel with a polyethylene (or similar) shield, as necessary, to minimize neutron doses. The walls and doors provide radiation shielding that will limit the dose rates outside of the canister transfer cells during transfer operations to as low as is reasonably achievable. The walls and sliding doors of the canister transfer cells shall be seismically designed to withstand earthquake induced loads and remain in place following the PFSF design basis ground motion.

The east wall of the crane bay is 2 ft thick concrete, and it is expected that dose rates in the rooms and offices east of this wall will be less than 5 mrem/hr, even when shipping

cask movements and canister transfer operations are in progress, and will not require posting as Radiation Areas. Dose rates in the vicinity of low level waste storage containers are expected to be insignificant, due to the relatively low quantities of radioactivity that will be stored in this area resulting from incidental cleanup of any contamination. Nevertheless, the 2 ft thick concrete north and east walls, and 1 ft thick concrete south and west walls of the Low Level Waste Room will assure that dose rates outside this room are as low as is reasonably achievable. No credit is taken for shielding by other walls of the Canister Transfer Building.

7.3.2 Access Control

The PFSF is designed to provide access control in accordance with 10 CFR 72. Access control to the RA is provided for both personnel radiological protection and facility physical protection. The physical protection program is covered in the Security Plan, which is classified and submitted as part of the License Application under separate cover.

The access control boundaries for the controlled and restricted areas are established along the site fence lines (see Figure 1.1-2, the PFSF Site Plan). The RA is that space which is controlled for purposes of protecting individuals from exposure to radiation or

radioactive materials and for providing facility physical security. The boundary for the RA is the security fence where the dose rate is less than 2 mrem/hr, in accordance with 10 CFR 20.1301. The controlled area is the area inside the site boundary (delineated by the OCA fence). The dose rate beyond the OCA fence is less than 25 mrem/yr, in accordance with 10 CFR 72.104.

Access to the RA is controlled through a single access point in the Security and Health Physics Building (see Figure 1.2-1, the PFSF General Arrangement). Personal dosimetry is issued and controlled in this building to individuals entering the RA. Provisions exist in this building for donning and removing personal protective equipment, such as anti-contamination clothing and/or respirators, which could be necessary in the event of contamination in the Canister Transfer Building as a result of off-normal or accident conditions. Provisions for personnel decontamination are also contained in the Security and Health Physics Building. The RA also includes the cask storage area and Canister Transfer Building. In accordance with the PFSF Radiation Protection Program (Section 7.5), radiation protection personnel will monitor radiation levels in the RA and establish access requirements as needed.

7.3.3 Shielding

The storage systems are designed to maintain radiation exposures ALARA. The HI-STORM storage cask design objectives specified in Section 2.3.5.2 of the HI-STORM SAR are maximum contact dose rates of 40 mrem/hr on the side, 10 mrem/hr at the top, and 60 mrem/hr at the air vents.

Special design provisions are not required to shield low-level radioactive waste materials that could potentially be generated due to the low activity inventory that would be associated with these materials. As discussed in Section 6.4, low-level solid waste would be expected to consist of smears, disposable clothing, tape, blotter paper, rags and related health physics material. This material will be processed and temporarily

stored in the LLW holding cell of the Canister Transfer Building, while awaiting removal to a licensed LLW disposal facility. The material will be packaged and stored in sealed LLW containers. The LLW containers provide necessary shielding, and dose rates on the outside surfaces of the drums are expected to be negligible. In the unlikely event materials are stored in the holding cell with significant activity levels, temporarily located shielding may be used to maintain dose rates in the area ALARA, as determined by radiation protection personnel.

7.3.3.1 Shielding Configurations

Chapter 5 of the HI-STORM SAR identifies the shielding materials and geometries of the transfer and storage casks and describes the codes used to model shielding and assess cask dose rates.

The thick steel canister lid provides radiation protection for workers engaged in the canister transfer operations, as well as substantial shielding in the top axial direction during storage. Additional shielding in the top axial direction is provided by the lid on the storage cask. Shielding located axially below the spent fuel assemblies consists of the steel canister bottom plate and a thick section of concrete/steel beneath the canister. Radiation shielding in the radial direction during storage is provided primarily by the steel canister shell, the steel storage cask liners, and the approximately 2 1/4 ft thick concrete walls of the storage cask. The designs of the inlet and outlet ducts for the storage cask prevent direct radiation streaming from the canister to the cask exterior. Shielding materials and geometries are described in detail in the HI-STORM SAR.

The transfer cask is designed to reduce the dose rates from a canister loaded with fuel to ALARA, enabling personnel to perform the canister transfer operation without exposure to excessive dose rates. With a canister in the transfer cask, shielding at the

top is provided primarily by the canister lid. Radial shielding is provided by the transfer cask, composed of steel shells with gamma and neutron shielding materials. The transfer cask lower shield doors consist of a sandwich of steel, lead, and neutron shield materials for Holtec's HI-TRAC transfer cask.

In the HI-STORM shielding model, the canister internals were explicitly modeled and fuel assembly materials were homogenized. The end fittings and plenum regions were modeled as homogeneous regions of steel. This homogenization was determined to result in a noticeable decrease in computer run time without any loss of accuracy. Several conservative approximations were made in the model, such as not including shielding provided by the fuel spacers, as described in Chapter 5 of the HI-STORM SAR.

7.3.3.2 Shielding Evaluation

The shielding analyses, documented in Chapter 5 of the HI-STORM SAR, model generic reference PWR and BWR fuel (Section 7.2.1). Dose rates projected from the HI-STORM storage cask will envelope those dose rates that will actually be produced at the PFSF and provide conservative dose rates for purposes of assessing onsite and offsite radiation exposures. The results of these shielding analyses are summarized in the following sections.

The storage cask vendor considered different types of canisters in the shielding analyses: PWR canisters that contain 24 PWR spent fuel assemblies and BWR canisters that contain 68 assemblies.

The HI-STORM shielding analyses were performed using the MCNP code. Discussions of the modeling code and methodologies are included in Chapter 5 of the HI-STORM SAR. The HI-STORM storage casks at the PFSF will have a minimum concrete

compressive strength of 3,000 psi, as discussed in Section 8.2.6.2, which is lower than the 4,000 psi minimum concrete compressive strength specified in the HI-STORM SAR. Holtec evaluated potential effects of the reduced concrete strength on the storage cask shielding analyses in Reference 26, and concluded the following: "The shielding effectiveness of concrete is governed by concrete density. Concrete compressive strength is controlled primarily by the water-cement ratio. The density of the concrete is inconsequentially affected by variations in the ratio of these two materials. Therefore, use of a lower strength concrete to promote energy absorption in the event of a tipover or a handling accident will not have any affect on the ability of the overpack concrete to perform its shielding function since the material density remains essentially the same."

THIS PAGE INTENTIONALLY LEFT BLANK

7.3.3.3 Dose Rates for a Single Storage Cask

Gamma and neutron dose rates for a single storage cask were determined at the following locations for the HI-STORM storage cask, assuming PWR and BWR reference fuels having various burnups and cooling times:

- on contact with the side of the storage cask,
- one meter from the side of the storage cask,
- on contact with the top of the storage cask,
- one meter from the top of the storage cask,
- at the air inlet duct openings, and
- at the air outlet duct openings.

Resulting dose rates for a single storage cask are presented in Table 7.3-1 for the PWR and BWR reference fuel cases analyzed and documented in the vendor SAR. Figure 7.3-1 identifies the locations of the points relative to the storage casks at which dose rates were calculated.

7.3.3.4 Dose Rates for a Transfer Cask

Gamma and neutron dose rates for a transfer cask were also determined at various locations for the HI-TRAC transfer cask. Table 7.3-3 presents calculated dose rates for the HI-TRAC transfer cask, assuming the cask contains an MPC-24 canister of PWR reference fuel with 45 GWd/MTU burnup, 9-year cooling time. Figure 7.3-2 identifies the locations of the points relative to the transfer cask at which dose rates were calculated.

7.3.3.5 Dose Rates at Distances from the PFSF Array of Storage Casks

Gamma and neutron dose rates at various distances from a single storage cask were calculated, assuming fuel with conservative burnup and cooling time representative of high radiation source fuel expected to be stored at the PFSF, instead of reference fuel. The results of these single storage cask calculations were then used in support of the dose rate vs. distance analyses for the fully loaded PFSF array of 4,000 casks.

The basis for these calculations is that all 4,000 casks contain 40 GWd/MTU burnup and 10-year cooled PWR spent fuel, with a low initial enrichment assumed for this burnup. The assumption of 40 GWd/MTU burnup and 10-year cooled PWR fuel is intended to provide a conservative representation of dose rates associated with average fuel in the PFSF array of 4,000 casks at the restricted area (RA) fence and owner controlled area (OCA) boundary. It is assumed that the design inventory of 4,000 storage casks stored on the storage pads has these characteristics for the purpose of calculating dose rates for comparison with the applicable limits of 10 CFR 20.1301 (dose rate less than 2 mrem/hr for unrestricted areas) and 10 CFR 72.104 (annual dose to an individual at the OCA boundary of less than 25 mrem).

A more realistic cooling time of 10 years (as compared to 5-year cooled reference fuel) is used since it is not reasonable to assume that 4,000 loaded storage casks are stored at the PFSF with an average cooling time of 5 years. This is based on the following: (1) the majority of the nuclear power plant spent fuel currently available to be stored at the PFSF is over 10 years old; (2) the minimum cooling time requirement for transporting 40 GWd/MTU PWR fuel is 12 years for the Holtec HI-STAR shipping cask system (Reference 24); and (3) the anticipated maximum storage cask loading rate at the PFSF is one cask per operating day or about 200 casks per year, which at this rate would take 20 years for the PFSF to be filled. Therefore, a 10-year cooling time is considered to be conservative for the 4,000-cask PFSF array since the actual average

cooling time is expected to be much greater than 10 years. 40 GWd/MTU is considered to represent a conservative burnup for the majority of fuel stored at the PFSF.

DOE's Energy Information Administration's Service Report entitled "Spent Nuclear Fuel Discharges from U.S. Reactors - 1994" (Reference 19), provides information regarding characteristics of spent fuel in the U.S. This report was reviewed to evaluate average burnups and cooling time associated with the spent fuel inventory at the end of 1994. At this time, the spent fuel inventory from PWRs was approximately 19,000 MTU, and the inventory from BWRs approximately 11,000 MTU, for a total inventory of approximately 30,000 MTU (Table 5 of Reference 19). This spent fuel inventory represents 75% of the capacity of the PFSF. While it is recognized that provisions already exist for storage of some of this spent fuel and the PFSF will not furnish storage for this entire inventory, data associated with this spent fuel is considered representative of fuel that the PFSF could be expected to receive. The weighted average burnup (weighted by MTU) for the BWR spent fuel inventory in the U.S. was calculated from Table 6 of Reference 19 to be approximately 23.8 GWd/MTU, and the weighted average burnup for the PWR spent fuel inventory in the U.S. was calculated from Table 7 of Reference 19 to be approximately 32.4 GWd/MTU (Reference 20).

Weighted average cooling times were also calculated from the data presented in Tables 6 and 7 of Reference 19, conservatively assuming that the PFSF receives 2,000 MTU of spent fuel each year, beginning in the year 2002, until all 30,000 MTU have been received (in year 2016). It was assumed that the older spent fuel, whether BWR or PWR, is received first. Based on these assumptions, the weighted average cooling time for spent fuel assumed to be received at the PFSF was calculated to be 23.0 years (Reference 20).

Because of the large inventory of spent fuel taken into account (approximately 30,000 MTU), this is considered to be a reasonable representation of typical fuel that will be received at the PFSF. Based on this evaluation of the spent fuel inventory in existence

in the U.S. at the end of 1994, it is determined that use of the 40 GWd/MTU burnup and 10-year cooled PWR fuel assumed in the shielding analyses to evaluate dose rates at the RA fence and OCA boundary from the array of 4,000 casks is conservative.

Holtec computed dose rates at the surface of a HI-STORM storage cask and at various distances from the cask, assuming fuel with 40 GWd/MTU burnup and 10-year cooling time, using the MCNP code. The HI-STORM SAR shows that a HI-STORM storage cask containing a PWR canister (MPC-24) has higher contact dose rates on the top and at the outlet duct opening than a HI-STORM storage cask containing a BWR canister (MPC-68), for fuel of identical burnup and cooling times. The dose rate at the midplane for an overpack containing a PWR canister is essentially the same as that for a storage cask containing a BWR canister. Therefore, it was determined that the dose rates from a HI-STORM storage cask containing a PWR canister will bound dose rates from a storage cask containing a BWR canister, and dose rates at distances from the PFSF array were assessed conservatively assuming all storage casks are loaded with PWR canisters. The primary radiation source terms accounted for in Holtec's analysis were: gamma and neutron sources from the decay of fission products and the gamma source from the decay of Co-60 in the fuel assembly end-fittings. Secondary radiation source terms accounted for were secondary neutrons from fast fission in the fuel and secondary gammas from prompt neutron interaction in the canister and overpack. The canister and overpack were modeled in full three-dimensional detail using the MCNP code, in the same manner that the storage cask was modeled with reference fuel, as described in the HI-STORM SAR.

The single storage cask dose rate versus distance data for HI-STORM casks containing 40 GWd/MTU, 10-year cooled fuel are shown in Table 7.3-5 for the following four components: gammas and neutrons from the cask side and top. These data were used, along with the layout of the cask array at the PFSF (see PFSF Site Plan, Figure 1.1-2),

to determine dose rates at various distances, including the RA fence and the OCA boundary from the PFSF array of 4,000 casks. The following paragraphs summarize the methodology used and results of dose rate projections from the PFSF array, assuming the PFSF is filled with HI-STORM storage casks containing 40 GWd/MTU, 10-year cooled fuel.

Holtec used the dose rate vs. distance data from a single HI-STORM storage cask, shown in Table 7.3-5, to project dose rates at various distances from the PFSF array, assumed to be filled with 4,000 HI-STORM storage casks containing 40 GWd/MTU, 10-year cooled fuel (Reference 13). The dose rate contributions from the tops and sides of the casks were separately analyzed using the MCNP code. The total dose rate from the tops of casks is a summation of the gamma and neutron top doses from all 4,000 casks, where the actual distance from each cask to the dose receptor is accounted for.

The total dose from the sides of the casks is a summation of side doses from all 4,000 casks where the distances within the facility and self-shielding of one row of casks by another row are accounted for. The fraction of radiation blocked by a cask directly in front of another cask was calculated by MCNP and used in the determination of total side dose rates. Self-shielding effects are different along the north/south faces than along the east/west faces because of the different geometries, as seen in Figure 1.2-1.

It was impractical to model the entire facility in MCNP, therefore, numerous smaller calculations were performed for configurations of several casks and combined in a conservative fashion to accurately estimate dose rates from the sides of the casks at various distances from the PFSF array. Modeling of configurations of casks determined the fractional increases in dose rates when a row of casks is added directly behind another row along the east/west and north/south faces at various distances. Different configurations were analyzed to account for the different cask and pad spacing within the array in both the east/west and north/south directions.

The results of the dose rate vs. distance analysis for the PFSF array full of HI-STORM storage casks are given in Table 7.3-7 (Reference 13). Total dose rates at the RA fence (150 ft from the nearest storage pads) at the north side of the array are 1.69 mrem/hr. The RA fence south of the array is 265 ft from the nearest storage pads, so will have lower dose rates. Total dose rates at the RA fence on the east and west sides of the array (also 150 ft from the nearest storage pads) are 1.43 mrem/hr. It is considered that dose rates calculated by this analysis are very conservative, since PWR fuel having 40 GWd/MTU burnup and 10-year cooling time represents relatively "hot" fuel, which will produce substantially higher array dose rates than PFSF average fuel. Spent PWR fuel having 35 GWd/MTU burnup and 20-year cooling time is considered to be representative of typical fuel expected to be received at the PFSF, as explained in Section 7.4. Applying scaling factors to calculate dose rates assuming all 4,000 HI-STORM casks contain this typical fuel, the highest dose rate at the RA fence for this typical fuel is 0.60 mrem/hr (Reference 23).These dose rates are less than the 2 mrem/hour criteria for unrestricted areas specified in 10 CFR 20.1301 and are therefore acceptable. Assuming all 4,000 casks contain the relatively hot PWR fuel having 40 GWd/MTU burnup and 10-year cooling time, the total dose rates at the OCA boundary were calculated to be 5.85 mrem/yr at a point on the boundary 1,969 ft (600 meters) north of the RA fence, and 4.35 mrem/yr at a point on the boundary 600 meters west of the RA fence (Reference 13), assuming a hypothetical individual spends 2,000 hours per year at the OCA boundary. Dose rates will be lower at points along the south and east sides of the OCA boundary, since these points are further from the storage casks than the north and west OCA boundaries. The maximum annual dose at the OCA boundary assuming typical fuel expected to be received at the PFSF (scaling the dose

rates to be representative of PWR fuel having 35 GWd/MTU burnup, 20-year cooling time) is 2.10 mrem (Reference 23). These dose rates are less than the 25 mrem criteria specified in 10 CFR 72.104 for maximum permissible annual whole body dose to any real individual located beyond the controlled area boundary and are therefore acceptable.

Dose at Nearest Residence

The approximate distance to the nearest residence is 2 miles east-southeast of the PFSF. At distances greater than several thousand feet, the accuracy of computer code calculational techniques becomes questionable. The error bands in statistical codes like MCNP become large and for deterministic codes like Skyshine, the conditions may be beyond the range of the codes data. However, dose rates were estimated that could occur at long distances from the PFSF, assuming the PFSF array of 4,000 HI-STORM storage casks loaded with 40 GWd/MTU, 10-year cooled PWR fuel, and conservatively taking no credit for any intervening shielding from berms, natural terrain or buildings at the PFSF. Holtec estimated the dose rate at 2.0 miles from the PFSF by extrapolating the maximum dose rate at the OCA boundary (5.85 mrem/yr) out to a distance of 2.0 miles using a power curve (Reference 13). The result was an annual dose of 8.12 E-3 mrem at a distance of 2.0 miles from the OCA boundary for a 2,000 hour assumed annual occupancy. This equates to an annual dose of 3.56 E-2 mrem, assuming a person is continually present (8,760 hrs/yr) at this location.

7.3.4 Ventilation

10 CFR 72.122(h)(3) requires that ventilation systems and off-gas systems be provided where necessary to ensure the confinement of airborne radioactive particulate materials during normal or off-normal conditions. However, there are no special ventilation systems installed in the PFSF facilities. There are no credible scenarios that would require installation of ventilation systems to protect against off-gas or particulate filtration.

7.3.5 Area Radiation and Airborne Radioactivity Monitoring Instrumentation

10 CFR 72.122(h)(4) requires the capability for continuous monitoring of the storage system to enable the licensee to determine when corrective action needs to be taken to maintain safe storage conditions. This is not applicable to the PFSF because the canisters are sealed by welding and with the canisters in storage casks and the casks on the storage pads, there are no credible events that could result in releases of radioactive material from within the canisters or unacceptable increases in direct radiation levels. Area radiation and airborne radioactivity monitors are therefore not needed at the storage pads. However, TLDs will be used to record dose rates in the RA and along the OCA boundary fence. TLDs provide a passive means for continuous monitoring of radiation levels and provide a basis for assessing the potential impact on the environment.

TLDs will be located along the RA and OCA boundary fence such that each side of the boundary has one TLD at each corner, one on the N-S or E-W centerlines of the storage cask array, and one equidistant between each corner and the N-S or E-W centerlines. This provides a total of 16 TLD locations for each boundary. These TLDs will be used to record dose rates along the RA and OCA boundary fence and will provide documentation that radiation levels at these boundaries are within regulatory limits. TLDs will also be placed on the outside of several buildings as follows: NW corner of the Administration Building, NW corner of the Operations and Maintenance Building, NW corner of the Canister Transfer Building, and at three locations along the West wall of the Security and Health Physics Building. Additionally, TLDs will be located at strategic locations inside the Canister Transfer Building and the Security and Health Physics Building where personnel will normally be working. These TLDs will serve as a backup for monitoring personnel radiation exposure and maintaining this exposure ALARA. For redundancy, each TLD location mentioned above will house a set of two TLDs. The TLDs will be retrieved and processed quarterly. The TLDs will

primarily detect gamma radiation and have a lower limit of sensitivity of approximately 0.02 mrem.

Local radiation monitors with audible alarms will be installed in the Canister Transfer Building. These will provide warning to personnel involved in the canister transfer operation of abnormal radiation levels that could possibly occur during transfer operations. Because of the measures taken at the originating nuclear power plants to minimize loose surface contamination levels on the exterior of the canisters during fuel loading operations, as discussed in Section 7.2.2, and PFSF Technical Specification limits on surface contamination concentrations, whose bases are included in Chapter 10, it is unlikely that canister transfer operations would generate significant levels of airborne contaminants. Airborne radioactivity concentrations will be detected by continuous air monitors located in the exhaust of each canister transfer cell. The continuous air monitors will include local alarms to warn operating personnel in the unlikely event of an airborne release, remote alarm in the Security and Health Physics Building alarm station to ensure coverage at all times, and charting capability to provide data necessary to quantify any release. The radiological alarm systems will be designed with provisions for calibration and operability testing. There are no liquid or gaseous effluent releases from the PFSF. This satisfies the requirements of 10 CFR 72.126(b) and (c).

THIS PAGE INTENTIONALLY LEFT BLANK

7.4 ESTIMATED ONSITE COLLECTIVE DOSE ASSESSMENT

The shipping, transfer and storage casks are designed to limit dose rates to ALARA levels for operators, inspectors, maintenance, and radiation protection personnel when the canisters are being transferred from the shipping to the storage casks, when the storage casks are being moved to the storage pads, and while the storage casks are being stored on the pads.

Table 7.4-1 shows the estimated occupational exposures to PFSF personnel during receipt of the HI-STAR shipping cask, transfer of the canister from the shipping cask to the HI-STORM storage cask using the HI-TRAC transfer cask, movement of the storage cask to the pad, and emplacement on the pad. The estimated occupational exposures were calculated in Reference 20. The operational sequence for these operations is also described in Chapter 5.

Dose rate values include both gamma and neutron flux components, and are based on PWR fuel with 35 GWd/MTU burnup and 20-year cooling time. Fuel with these characteristics is considered to be representative of typical fuel that will be contained in canisters handled at the PFSF, and dose estimates based on fuel with these characteristics are considered to be realistic and reflect expected personnel exposures. Evaluation of weighted average burnups and cooling times of the nations' PWR and BWR spent fuel inventory in existence at the end of 1994, as discussed in Section 7.3.3.5, indicates an overall weighted average burnup (weighted by metric tons uranium) of approximately 32.4 GWd/MTU for PWR fuel and approximately 23.8 GWd/MTU for BWR fuel, with a

weighted average cooling time for both types of fuel of approximately 23.0 years (assuming 30,000 MTU of spent fuel is received during the first 15 years of PFSF operation). Based on this evaluation, the 35 GWd/MTU burnup and 20-year cooling time characteristics for spent fuel assumed in the onsite dose assessment are considered to be representative of typical fuel expected to be received at the PFSF.

From Table 7.4-1, the total dose from receipt of a loaded shipping cask, transfer of the canister into a storage cask, movement of the storage cask to the pad, and performance of initial surveillances is estimated to be about 247 person-mrem for the HI-STORM system. Assuming a storage cask loading rate of 200 casks per year, the total annual dose to operations and Radiation Protection personnel involved in these operations is estimated to be approximately 49 person-rem, assuming all storage casks are HI-STORM casks. Occupational doses to individuals will be administratively controlled to ensure that they are maintained below 10 CFR 20.1201 limits and ALARA.

Temporarily positioned shielding will be used during transfer operations to reduce dose rates from streaming paths or relatively high radiation areas where its use will result in a net reduction in worker exposures. The effects of temporarily positioned shielding, calculated in Reference 20, are considered in the Table 7.4-1 dose estimates for canister transfer operations.

Occupational exposures are also estimated to security personnel and PFSF personnel that conduct inspections, surveillances, and maintain the storage systems. These estimates are based on the assumption that the PFSF is at its 4,000 storage cask capacity. It is estimated that security personnel that conduct security inspections will accrue approximately 0.66 person-rem annually, based on one 1 hour inspection per shift (3 shifts per day,

365 days per year) along the RA fence, using the 0.60 mrem/hr dose rate at the fence discussed in Section 7.3.3.5. It is considered that dose rates inside the Security and Health Physics Building are negligible due to shielding provided by the building structure. One visual inspection per quarter is required to be performed for each storage cask to check for the buildup of debris at the inlet ducts and to inspect the cask exterior. Assuming one person spends 1.0 minute inspecting each cask, in an average dose field of 12.4 mrem/hr during the inspection, this surveillance will result in approximately 0.83 person-rem per quarter to PFSF personnel conducting the inspections, for a total of 3.3 person-rem annually. The 12.4 mrem/hr average dose field estimate near a cask inside the cask array is based on the Reference 21 calculation, which assumes that storage casks contain "typical" PFSF fuel, represented by PWR fuel with 35 GWd/MTU burnup and 20 year cooling time. Conservatively assuming that 5 percent of the 4,000 casks require clearing of debris from the inlet ducts once a year at 10 minutes each (Reference 21), in a dose field of 12.4 mrem/hr, an additional annual dose of 0.41 person-rem is estimated. Monitoring of temperatures representative of the thermal performance of the casks will be performed remotely with a data acquisition system and will not result in significant exposure. Based on the above, the total dose to personnel involved in security inspections, surveillance, and storage cask maintenance operations is estimated to be 4.4 person-rem annually, assuming all storage casks are HI-STORM casks.

PFS considers that the occupational exposures calculated and reported above are conservative (i.e., actual doses to individual workers at the PFSF will be a fraction of those calculated). Additionally, doses to workers will be closely monitored throughout

operations involving loaded canisters at the PFSF. Based on actual doses received from the first few canister transfer operations, measures will be implemented to maintain occupational exposure ALARA. These may include additional shielding, optimizing handling operations to maximize distance to the source, and reducing time in the radiation field. PFS is committed not only to maintaining occupational exposures below federal guidelines but to maintaining exposures ALARA as well.

A combination of building location and shielding will minimize the dose to staff personnel working in the PFSF facilities. The west sides of the Canister Transfer Building and Security and Health Physics Building are approximately 425 ft (130 meters) and 948 ft (289 meters), respectively, from the nearest storage pad (see Figure 1.2-1). The building structures will provide shielding to reduce doses to workers in the buildings from the cask storage area to levels that are ALARA. The Operations and Maintenance Building and Administration Building will be located near the entrance gate to the OCA (see Figure 1.1-2). The Administration Building is further from the storage pads (2,580 ft) than the nearest distances to the OCA boundary (2,119 ft), and the Operations and Maintenance Building is nearly as far away (1,960 ft). Dose rates at these buildings will be less than 25 mrem/yr (at a 2,000 hr/yr occupancy rate) without consideration for shielding provided by the building structures.

7.5 RADIATION PROTECTION PROGRAM

7.5.1 Organization

The PFSF Radiation Protection Manager reports to the General Manager and to the Board of Managers (Figure 9.1-3) and is responsible for administering the radiation protection program and for the radiation safety of the facility. Minimum qualification requirements are set forth in Section 9.1.3.1. The radiation protection and ALARA programs are discussed in Section 7.1.

Responsibilities of the PFSF Radiation Protection Manager include the following:

- Administer the Radiation Protection program policies and procedures
- Review and approve radiation protection procedures
- Coordinate radiation protection group activities with operations and maintenance personnel
- Ensure adequate staffing, facilities, and equipment are available to perform the functions assigned to radiation protection personnel
- Establish goals for the Radiation Protection program
- Initiate and implement an exposure control program that factors dosimetry results into operational planning
- Issue or rescind "stop work" orders as appropriate
- Ensure that locations, operations, and/or conditions that have the potential for causing significant exposures to radiation are identified and controlled
- Review and approve training programs related to work in radiological areas or involving radioactive material
- Administer shipments of solid radioactive waste offsite for disposal
- Review root causes and corrective actions for incidents and deficiencies associated with Radiation Protection

- Ensure an effective ALARA program is maintained, in accordance with the guidance provided in Regulatory Guides 8.8 and 8.10
- Supervise the collection, analysis and evaluation of data obtained from radiological surveys and monitoring activities
- Participate in the event of an emergency, as required

Radiation protection technicians report to the Radiation Protection Manager. Responsibilities of the radiation protection technicians include the following:

- Conduct radiation, contamination, and airborne surveys and prepare complete and accurate records
- Prepare Radiation Work Permits to control access to and activities in radiologically controlled areas
- Identify and post radiation, contamination, hot particle, airborne and radioactive material areas in accordance with 10 CFR 20 requirments
- Monitor PFSF operations to assure good radiological work practices
- Implement ALARA program requirements
- Maintain and calibrate portable monitoring instruments
- Issue "stop work" orders whenever activities have the potentail to jeopardize the health and safety of workers, visitors, or the general public
- Verify proper packaging of any radioactive material
- Participate in the event of an emergency, as required

7.5.2 Equipment, Instrumentation, and Facilities

A sufficient inventory and variety of operable and calibrated portable and fixed radiological instrumentation will be maintained to allow for effective measurement and control of radiation exposure and radioactive material and to provide back-up capability for inoperable equipment. Equipment will be appropriate to enable the assessment of

sources of gamma, neutron, beta, and alpha radiation, including the capability to measure the range of dose rates and radioactivity concentrations expected. Radiation protection procedures will govern instrument calibration, instrument inventory and control, and instrument operation.

Portable survey and personnel monitoring instrumentation will include, but not be limited to, the following:

- Low-level contamination meters
- Beta/gamma portable survey meters
- Alarming beta/gamma personnel friskers
- Portable air samplers

Radiological instrument storage, calibration and maintenance facilities will also be located in the Security and Health Physics Building, along with a low-radiation background counting room containing laboratory equipment for measuring radioactivity.

Area radiation monitors are utilized in the Canister Transfer Building since the operations performed in this building (shipping cask receipt, inspection, and canister transfer operations) pose the greatest risk to the operating staff for radiation exposure. These monitors have audible alarms to warn operating personnel of abnormal radiation levels. Area radiation monitors are not utilized outside the Canister Transfer Building since these areas have relatively low area radiation levels and there are no operations performed in these areas which could result in a rapid change in radiation level and pose a risk for over-exposure of personnel.

The RA is approximately 99 acres and is surrounded by a chain link security fence and an outer chain link nuisance fence with an isolation zone and intrusion detection system between the two fences. Access to the RA is controlled through a single access point in the Security and Health Physics Building (see Figure 1.2-1, the PFSF General

Arrangement). Personal dosimetry is issued and controlled in this building to individuals entering the RA. External radiation dose monitoring will be accomplished through the use of thermoluminescent dosimeters (TLDs) and self reading dosimeters (SRDs) or digital alarming dosimeters (DADs). All operating personnel inside an active canister transfer cell will be required to utilize alarming dosimeters during the canister transfer process to warn of excessively high direct radiation to maintain exposures ALARA, thereby providing additional assurance that occupation exposures will not exceed the limits of 10 CFR Part 20. The official record of external dose to beta and gamma radiations will normally be obtained from the TLDs, with SRDs or DADs used as a means for tracking dose between TLD processing periods and as a backup to TLDs. Self-reading dosimeters will be administered in accordance with the guidance in Regulatory Guide 8.4 (Reference 15).

Provisions exist in the Security and Health Physics Building for donning and removing personal protective equipment, such as anti-contamination clothing and/or respirators, which could be necessary in the event of contamination in the Canister Transfer Building due to off-normal or accident conditions. The respiratory protection program will be established in accordance with 10 CFR 20 and consistent with the guidance of NUREG-0041 (Reference 16). Radiation protection procedures will include the conduct of bioassays including criteria for the performance of bioassay, dose tracking and methods for data analysis and interpretation. The bioassay program will be based on NRC Regulatory Guide 8.26 (Reference 17) and Regulatory Guide 8.9 (Reference 18).

Provisions for personnel decontamination are contained in the Security and Health Physics Building. Contamination of equipment or personnel is not expected to occur under normal conditions of operation. In accordance with the PFSLLC's policy of preventing generation of liquid radioactive waste, any necessary decontamination of equipment and personnel will be conducted using methods that produce only solid radioactive waste. Decontamination methods would typically include wiping the contaminated item with rags or paper wipes. Drain sumps are provided in the cask

load/unload bay of the Canister Transfer Building which catch and collect water that drips from shipping casks (e.g. from melting snow) onto the floor. Water collected in the cask load/unload bay drain sumps is sampled and analyzed to verify it is not contaminated prior to its release. In the event contaminated water is detected, it will be collected in a suitable container, solidified by the addition of an agent such as cement or "Aquaset" so that it qualifies as solid waste, staged in the LLW holding cell while awaiting shipment offsite, and transported to a LLW disposal facility, in accordance with Radiation Protection procedures.

No process or effluent monitors are necessary because of the design of the PFSF storage system, in which spent fuel assemblies are stored in welded canisters. During routine storage operations at the PFSF, the only radiological instrumentation in use in the storage area will be the TLDs, as described in Section 7.3.5. Routine radiological surveys will use instruments that are controlled by the Radiation Protection Program and governed by existing procedures. Calibration procedures for radiological instrumentation will be established and applied to instruments used at the PFSF.

7.5.3 Procedures

Radiation protection requirements for all radiological work at the PFSF will be governed by radiation protection procedures. Radiation protection practices for cask loading and unloading operations, canister transfer, canister storage, and monitoring will also be based on these procedures, as well as on anticipated conditions when the task is to be performed. These procedures include, but are not limited to, the following:

- Procedure for performing badging functions for access authorization to the RA.

- Procedure for issuing personnel dosimetry, and monitoring, recording, and tracking individual exposures.

- Procedure for performing radiological safety training and refresher training.
- Procedure for performing ALARA reviews of plant procedures and monitoring of operations.
- Procedure for determining radiation doses on a periodic basis at RA and OCA boundaries using TLDs.
- Procedure for issuing, revising, and terminating radiation work permits and standing radiation work permits.
- Procedure for roping off, barricading, and posting radiation control zones.
- Procedure for decontaminating personnel, equipment, and areas.
- Procedure for performing radiation surveys.
- Procedure for smear swab sampling, counting, and calculation.
- Procedure for calibrating detection, monitoring, and dosimetry instruments.
- Procedure for quantifying airborne radioactivity.
- Procedure for maintaining records of the radiation protection program, including audits and other reviews of program content and implementation; radiation surveys; instrument calibrations; individual monitoring results; and records required for decommissioning.

Implementation of the Radiation Protection Program procedures ensures that occupational doses are below the limits required by 10 CFR 20.1201 and are ALARA both in the Canister Transfer Building as well as other parts of the facility. Area radiation montitors in the Canister Transfer Building have audible alarms and warn operating personnel of abnormal radiation levels. While area radiation monitors are not installed in the RA, measures are in place to ensure that personnel in the RA do not exceed dose limits. As discussed in Section 7.5.2, access to the RA is controlled through a single access point in the Security and Health Physics Building where personal dosimetry is issued to individuals entering the RA. Periodic radiation surveys will be conducted of areas inside the RA and maps will be generated showing the radiation levels in all areas. Radiation work permits (RWPs) will be completed by qualified radiation protection personnel prior to any entry and will identify normal and unusual radiation readings. Workers will be required to read, understand and sign that they are aware of the conditions or unknowns. Personnel will be trained to use the appropriate radiation detection instruments or will be required to have a qualified radiation protection technician with them at all time while in the areas. Training will include responses to unusual readings and off-scale conditions. The Radiation Protection program will provide for the immediate reading of any individual's TLD if an unusual reading or off-scale condition occurs.

THIS PAGE INTENTIONALLY LEFT BLANK

7.6 ESTIMATED OFFSITE COLLECTIVE DOSE ASSESSMENT

Figure 1.1-2 shows the PFSF OCA fence, which serves as the site boundary. Areas at and beyond the OCA fence are considered to be offsite. A maximum dose rate of 5.85 mrem/yr was calculated (Section 7.3.3.5) at the OCA boundary fence 1,969 ft (600 meters) from the RA fence at its closest points of approach. This dose rate is comprised of direct and scattered gamma and neutron radiation emanating from 4,000 HI-STORM storage casks and is based on the assumption that all 4,000 casks contain relatively hot fuel represented by PWR fuel with 40-GWd/MTU burnup and 10-years cooling time. A dose rate of 2.10 mrem/yr was calculated at the OCA boundary fence assuming the 4,000 HI-STORM storage casks contain typical fuel expected to be received at the PFSF with 35 GWd/MTU burnup and 20-year cooling time. Operations inside the Canister Transfer Building would not contribute significantly to dose rates at the OCA fence as a result of shielding provided by the Canister Transfer Building walls and 500 meter minimum distance from the Canister Transfer Building to the OCA fence. The maximum dose rate of 2.10 mrem/yr (assuming a hypothetical individual conservatively spends 2,000 hours a year at the OCA fence) is below the 25 mrem annual dose limit of 10 CFR 72.104.

The nearest residence is located approximately 2 miles east-southeast of the PFSF. As discussed in Section 7.3.3.5, a total dose rate of 3.56 E-2 mrem/yr (HI-STORM casks containing relatively hot fuel represented by PWR fuel having 40 GWd/MTU burnup and 10-year cooling time) is estimated at about 2 miles from the fully loaded ISFSI array, taking no credit for intervening shielding from berms, natural terrain, or buildings at the PFSF. This annual dose of 3.56 E-2 mrem assumes full-time occupancy (8,760 hrs/yr), and is far less than the 25 mrem to any real individual outside the controlled area criteria of 10 CFR 72.104.

7.6.1 Effluent and Environmental Monitoring Program

10 CFR 72.126(c) requires the means to measure effluents. Since there are no radioactive liquid or gaseous waste effluents released from the PFSF during transfer and storage operations, this criterion is not applicable to the PFSF.

The storage system is a passive design with the spent fuel stored dry within welded canisters. No handling of individual fuel assemblies is planned at the PFSF. Therefore, a radioactive effluent monitoring system is not needed and routine monitoring for effluents is not performed.

Solid low level radioactive wastes will be temporarily stored in the LLW holding cell while awaiting shipment to a LLW disposal facility, as discussed in Section 6.4. The LLW holding cell will be regularly surveyed and inventoried, including inspection of the materials stored to evaluate the status of materials and controls (e.g. physical condition of containers, access control, posting). Radiation protection procedures govern the packaging, storage, surveying, inventorying, and monitoring of solid LLW.

The PFSF spent fuel storage operations will emit radiation that will be monitored in the environment with TLDs that will be located along the perimeter of the RA and along the OCA boundary fence.

7.6.2 Analysis of Multiple Contributions

Evaluation of incremental collective doses resulting from other nearby nuclear facilities in addition to the ISFSI is required per 10 CFR 72.122(e). This is not applicable to the PFSF since there are no other nuclear facilities located within a 5-mile radius of the PFSF. The closest nuclear facility is the Envirocare low-level radioactive and mixed waste disposal facility, which is about 25 miles northwest of the PFSF.

7.6.3 Estimated Dose Equivalents From Effluents

The canisters are high integrity vessels sealed by welding. The confinement design of the HI-STORM canister is discussed in Section 4.2.1.5.5, and Chapter 7 of the HI-STORM SAR. Holtec performed an evaluation of the potential for leakage from a HI-STORM canister under normal conditions of storage in Reference 25. The object of Holtec's study was to determine whether it is credible for a HI-STORM canister to develop a leak while it is stored in a storage overpack for a period of up to forty years.

As noted in Reference 25, Holtec has designed the HI-STORM canister to ASME Section III, Class 1, which is the highest category available and the same category to which critical nuclear components, such as the reactor vessel, are engineered. To provide for additional margin in the ability of the canister to maintain absolute leak tightness, the wall thicknesses of the canister enclosure vessel were set to be much greater than those required by the ASME Code. For example, while the Code would have called for an approximately 2.25 inch thick top cover, the actual cover thickness used in the HI-STORM canister varies from 9.5 inch (PWR canisters) to 10 inches (BWR canisters). Likewise, the shell is over 100% thicker than required by the ASME Code. Further, as required by Class I of the ASME Nuclear Code, the material of the canister enclosure vessel is subjected to volumetric examinations to check for internal flaws and the welds are subjected to multiple surface non-destructive examinations to ensure that any welding flaw buried within the weld mass will be minimal and so small that it will remain unconditionally stable under normal storage conditions.

Holtec's analysis (Reference 25) was based on classical fracture mechanics and determined that, even if the largest possible material non-homogeneity is postulated to exist in the canister enclosure vessel, it is not possible for a leak path to develop from the inside of the vessel to the outside. The minimum factor-of-safety against flaw propagation implying through boundary leakage was calculated to be 4.25. This factor of safety translates into a virtually unbreachable boundary in normal storage because

the material strength (yield strength for example) would have to be 1/20 of its standard ASME Code required strength for the canister, to reduce the fracture toughness to a value that reduces the safety factor to 1.0. Steel mills do not produce austenitic stainless steel materials to any user, nuclear or commercial, which have such reduced yield strengths. Reference 25 indicates that in procuring the material for the HI-STORM canisters, Holtec employs the highest standards of quality assurance, which have been reviewed and approved by the NRC. The manufacturer of the canisters is required to hold the ASME Code stamp for Class 1 nuclear components.

In view of the design margins engineered into the canister enclosure vessel, the stringent quality control measures implemented in its manufacturing and use of proven stainless steel alloy materials, Holtec concluded (Reference 25) that a through-wall leak from a HI-STORM canister is not a credible event. Since canisters will not leak under normal conditions of storage, there will be no doses attributable to effluents from canisters. The PFSF does not generate any gaseous or liquid effluents during normal operating conditions and there will be no doses attributable to effluents in the areas surrounding the PFSF.

7.6.4 Liquid Release

There are no radioactive liquid effluents generated at the PFSF. As discussed in Section 7.5.2, any water collected in the Canister Transfer Building shipping cask load/unload bay drain sumps from potential moisture gathered on the outer surfaces of shipping casks during transport is sampled and analyzed to verify it is not radioactive prior to its release. In the event contaminated water is detected, it will be collected in a suitable container, solidified so that it qualifies as solid waste, staged in the LLW holding cell while awaiting shipment offsite, and transported to a LLW disposal facility, in accordance with Radiation Protection procedures.

7.7 REFERENCES

1. 10 CFR 72, Licensing Requirements for the Independent Storage of Spent Nuclear Fuel and High Level Radioactive Waste.

2. 10 CFR 20, Standards for Protection Against Radiation.

3. 10 CFR 19, Notices, Instructions and Reports to Workers: Inspection and Investigations.

4. Regulatory Guide 8.8, Information Relevant to Ensuring That Occupational Radiation Exposures at Nuclear Power Stations Will Be As Low As Is Reasonably Achievable, U.S. NRC, Revision 3, June 1978.

5. Regulatory Guide 8.10, Operating Philosophy for Maintaining Occupational Radiation Exposures As Low As Is Reasonably Achievable, U.S. NRC, Revision 1-R, May 1977.

6. Final Safety Analysis Report for the Holtec International Storage and Transfer Operation Reinforced Module Cask System (HI-STORM 100 Cask System), Holtec Report HI-2002444, NRC Docket No. 72-1014, Revision 0, July 2000.

7. (deleted)

8. DOE/RW-0184-R1, Characteristics of Potential Repository Wastes, Office of Civilian Radioactive Waste Management, U.S. Department of Energy, July 1992.

9. PNL-6906, Spent Fuel Assembly Hardware: Characterization and 10 CFR 61 Classification for Waste Disposal, Pacific Northwest Laboratory, June 1989.

10. ORNL/TM-9591/V1&R1, Physical and Decay Characteristics of Commercial LWR Spent Fuel, Oak Ridge National Laboratory, January 1996.

11. ORNL/TM-6051, Revised Uranium-Plutonium Cycle PWR and BWR Models for the ORIGEN Computer Code, Oak Ridge National Laboratory, September 1978.

12. (deleted)

13. Holtec Report HI-971645, Revision 2, Radiation Shielding Analysis for the Private Fuel Storage Facility, Holtec International, March 2001.

14. (deleted)

15. Regulatory Guide 8.4, Direct-Reading and Indirect-Reading Pocket Dosimeters, U.S. NRC, February 1973.

16. NUREG-0041, Manual of Respiratory Protection Against Airborne Radioactivity Materials, October 1976.

17. Regulatory Guide 8.26, Application of Bioassay for Fission and Activation Products, U.S. NRC, September 1980.

18. Regulatory Guide 8.9, Acceptable Concepts, Models, Equations and Assumptions for a Bioassay Program, U.S. NRC, September 1973.

19. U.S. Department of Energy, Energy Information Administration's Service Report entitled "Spent Nuclear Fuel Discharges from U.S. Reactors - 1994", published in February 1996.

20. PFSF Calculation No. 05996.02-UR-6, Calculational Basis for PFSF SAR Tables 7.4-1 and 7.4-2, Estimated Personnel Exposures for Canister Transfer Operations, Revision 2, Stone & Webster.

21. PFSF Calculation No. 05996.02-UR-5, Dose Rate Estimates from Storage Cask Inlet Duct Clearing Operations, Revision 2, Stone & Webster.

22. DOE/RW-0184, Characteristics of Spent Fuel, High Level Waste, and Other Radioactive Wastes Which May Require Long-Term Isolation, U.S. Department of Energy, December 1987.

23. PFSF Calculation No. 05996.02-UR(D)-12, Dose Rates From the 4000 Storage Cask PFSF Array Representative of PFSF Typical Spent Fuel, Assumed to be PWR Fuel Having 35 GWd/MTU Burnup and 20 Year Cooling Time, Revision 1, Stone & Webster.

24. Topical Safety Analysis Report for the Holtec International Storage, Transport, and Repository Cask System (HI-STAR 100 Cask System), Holtec Report HI-951251, Docket 71-9261, Revision 9, April 2000.

25. Holtec Report HI-2002424, Revision 0, A Deterministic Evaluation of Potential for Leakage from a HI-STAR/HI-STORM Multi-Purpose Canister, May 2000.

26. PFS letter, Donnell to U.S. NRC, PFSF Site-Specific HI-STORM Evaluation, dated May 31, 2001.

TABLE 7.3-1

MAXIMUM DOSE RATES ON CONTACT AND AT ONE METER FROM A HI-STORM STORAGE CASK (mrem/hr)

Detector Location (see Figure 7.3-1)	PWR 45 GWd/MTU 5-year cool	BWR 45 GWd/MTU 5-year cool
1) Side, contact	γ = 31.70 n = 1.88 Tot = 33.58	γ = 31.96 n = 2.96 Tot = 34.92
2) Side, 1 meter	γ = 16.64 n = 0.78 Tot = 17.42	γ = 16.23 n = 1.07 Tot = 17.30
3) Top, contact	γ = 1.31 n = 3.60 Tot = 4.91	γ = 1.02 n = 3.29 Tot = 4.31
4) Top, 1 meter	γ = 0.60 n = 1.10 Tot = 1.70	γ = 0.53 n = 0.82 Tot = 1.35
5) Top vent, contact	γ = 7.21 n = 1.38 Tot = 8.59	γ = 6.11 n = 1.12 Tot = 7.23
6) Bottom vent, contact	γ = 10.75 n = 2.76 Tot = 13.51	γ = 10.96 n = 3.56 Tot = 14.52

TABLE 7.3-2

(deleted)

TABLE 7.3-3

MAXIMUM DOSE RATES ASSOCIATED WITH A 125-TON HI-TRAC TRANSFER CASK (mrem/hr)

Detector Location (see Figure 7.3-2)	PWR 45 GWd/MTU 9-year cool
1) Side, contact	γ = 65.66 n = 50.00 Tot =115.66
2) Side, 1 meter	γ = 23.75 n = 18.03 Tot = 41.78
3) Top, contact	γ = 164.51 n = 158.74 Tot = 323.25
4) Top, side contact	γ = 24.48 n = 138.83 Tot = 163.31
5) Bottom, center, contact	γ = 197.98 n = 87.90 Tot = 285.88
6) Bottom, side, contact	γ = 79.25 n = 83.52 Tot = 162.77

TABLE 7.3-4

(deleted)

TABLE 7.3-5

DOSE RATES VERSUS DISTANCE FOR A SINGLE HI-STORM STORAGE CASK *

(mrem/hr)

Distance from Cask Side	Cask Side Gamma Dose Rate	Cask Side Neutron Dose Rate	Cask Top Gamma Dose Rate	Cask Top Neutron Dose Rate	Total Dose Rate
150 ft (46 m – security fence)	2.10 E-2	1.65 E-3	2.39 E-5	1.88 E-4	2.29 E-2
328 ft (100 m)	3.46 E-3	2.95 E-4	7.32 E-6	4.63 E-5	3.81 E-3
656 ft (200 m)	5.33 E-4	4.97 E-5	1.53 E-6	7.67 E-6	5.92 E-4
984 ft (300 m)	1.40 E-4	1.44 E-5	4.16 E-7	1.77 E-6	1.57 E-4
1476 ft (450 m)	2.76 E-5	2.90 E-6	7.41 E-8	2.68 E-7	3.08 E-5
1969 ft (600 m - OCA fence)	6.69 E-6	9.28 E-7	1.79 E-8	4.85 E-8	7.68 E-6

* Cask assumed to contain 40 GWd/MTU, 10-year cooled PWR fuel.

TABLE 7.3-6

(deleted)

TABLE 7.3-7

DOSE RATES AT LOCATIONS OF INTEREST FROM THE PFSF ARRAY OF 4,000 ASSUMED HI-STORM STORAGE CASKS *

Distance and Direction to Detector from Nearest Storage Pad	Dose Rate from Sides of Casks	Dose Rate from Tops of Casks	Total Dose Rate
150 ft north (security fence)** (mrem/hr)	1.65	3.58 E-2	1.69
150 ft east or west (security fence) (mrem/hr)	1.40	3.35 E-2	1.43
2,119 ft north (OCA boundary)*** (mrem/yr)	5.78	7.64 E-2	5.85
2,119 ft west (OCA boundary)*** (mrem/yr)	4.28	7.35 E-2	4.35

* Casks assumed to contain 40 GWd/MTU, 10-year cooled PWR fuel.

** The security (Restricted Area) fence is 150 ft from the nearest storage pad in the north, east, and west directions. It is further (265 ft) from storage pads in the south direction. Therefore, the dose rate at the south security fence will be less than that at the north security fence.

*** The distance from the nearest pads to the north and west Owner Controlled Area (OCA) boundary fence is 2,119 ft. Distances to the OCA boundary fence are further from the storage pads in the south (≈2,300 ft) and east (≈2,260 ft) directions, and dose rates would be lower at these sections of the OCA boundary fence.

TABLE 7.3-8

(deleted)

TABLE 7.4-1
(Page 1 of 4)
ESTIMATED PERSONNEL EXPOSURES FOR HI-STORM CANISTER TRANSFER OPERATIONS

Operation	No. of Personnel [1]	Task Duration[2] (hours)	Time in Dose Area[3] (hours)	Dose Rate in Area[4] (mrem/hr)	Dose[5] (person-mrem)
1. Receive and inspect shipment, and measure dose rates.	2 Ops 1 HP	0.5	0.5 0.5	4 4	4 2
2. Move shipment into Canister Transfer Building.	3 Ops 1 HP	0.5	0.5 0.5	0 0	0 0
3. Remove personnel barrier, measure dose rates, and perform contamination survey.	2 Ops 1 HP	1.6	1.0 1.6	6 8	12 12.8
4. Remove impact limiters and tiedowns.	2 Ops 1 HP	1.5	1.5 1.5	4 1	12 1.5
5. Attach lifting yoke to crane and HI-STAR shipping cask. Upright HI-STAR cask and move to transfer cell.	2 Ops 1 HP	1.0	0.5 1.0	4 1	4 1
6. Sample enclosed cask gas and vent.	1 Op 1 HP	0.5	0.5 0.5	2 1	1 0.5
7. Remove HI-STAR closure plate (lid) bolts.	2 Ops 1 HP	1.0	1.0 1.0	2 1	4 1
8. Remove HI-STAR closure plate (lid).	2 Ops 1 HP	0.2	0.2 0.2	2 1	0.8 0.2
9. Prep HI-STAR to mate with HI-TRAC transfer cask.	2 Ops 1 HP	0.2	0.2 0.2	2 1	0.8 0.2
10. Install canister lift cleats and attach slings.	2 Ops 1 HP	1.0	1.0 1.0	40 / 21 1	80 / 42 1

TABLE 7.4-1 (Page 2 of 4)

Operation	No. of Personnel[1]	Task Duration[2] (hours)	Time in Dose Area[3] (hours)	Dose Rate in Area[4] (mrem/hr)	Dose[5] (person-mrem)
11. Attach lifting yoke to crane and HI-TRAC.	2 Ops 1 HP	0.5	0.5 0.5	2 1	2 0.5
12. Mount HI-TRAC on top of HI-STAR.	2 Ops 1 HP	0.5	0.5 0.5	2 1	2 0.5
13. Open HI-TRAC transfer cask doors.	2 Ops 1 HP	0.2	0.2 0.2	7 1	2.8 0.2
14. Attach slings to canister downloader hoist and raise canister.	2 Ops 1 HP	0.5	0.5 0.5	14 1	14 0.5
15. Close HI-TRAC doors and install pins.	2 Ops 1 HP	0.2	0.2 0.2	7 1	2.8 0.2
16. Lower canister onto HI-TRAC doors.	2 Ops 1 HP	0.2	0.2 0.2	1 1	0.4 0.2
17. Prep HI-STORM storage cask to mate with HI-TRAC transfer cask (including installation of HI-STORM shielding inserts, struts).	2 Ops 1 HP	0.2	0.2 0.2	4 1	1.8 0.2
18. Move HI-TRAC from HI-STAR to HI-STORM.	2 Ops 1 HP	0.7	0.7 0.7	1 1	1.4 0.7
19. Raise canister and open HI-TRAC doors.	2 Ops 1 HP	0.5	0.2 0.5	7 1	2.8 0.5
20. Lower canister into HI-STORM storage cask.	2 Ops 1 HP	0.5	0.5 0.5	1 1	1 0.5
21. Disconnect lifting slings.	2 Ops 1 HP	0.2	0.2 0.2	14 1	5.6 0.2

TABLE 7.4-1 (Page 3 of 4)

Operation	No. of Personnel [1]	Task Duration[2] (hours)	Time in Dose Area[3] (hours)	Dose Rate in Area[4] (mrem/hr)	Dose[5] (person-mrem)
22. Close transfer cask doors.	2 Ops	0.2	0.2	7	2.8
	1 HP		0.2	1	0.2
23. Remove HI-TRAC from HI-STORM.	2 Ops	0.5	0.5	1	1
	1 HP		0.5	1	0.5
24. Remove canister lift cleats and HI-STORM shield inserts.	2 Ops	0.5	0.5	40 / 21	40 / 21
	1 HP		0.5	1	0.5
25. Install HI-STORM lid and lid bolts, remove support struts.	2 Ops	1.0	1.0	1	2.1
	1 HP		1.0	1	1
26. Perform dose survey and install HI-STORM lifting eyes.	2 Ops	0.5	0.5	1	1
	1 HP		0.5	1	0.5
27. Drive cask transporter in transfer cell.	1 Op	0.3	0.3	1	0.3
	1 HP		0.3	1	0.3
28. Connect HI-STORM to cask transporter.	2 Ops	0.5	0.5	1	1
	1 HP		0.5	1	0.5
29. Raise HI-STORM storage cask.	2 Ops	0.2	0.2	1	0.4
	1 HP		0.2	1	0.2
30. Transport HI-STORM cask to storage pad.	2 Ops	2.0	2.0	1	4
	1 HP		2.0	1	2
31. Position and lower HI-STORM cask on pad.	2 Ops	0.5	0.5	9	9
	1 HP		0.5	7	3.5
32. Disconnect HI-STORM cask from transporter and remove cask lifting eyes.	2 Ops	1.0	1.0	9	18
	1 HP		1.0	7	7

TABLE 7.4-1 (Page 4 of 4)

Operation	No. of Personnel [1]	Task Duration[2] (hours)	Time in Dose Area[3] (hours)	Dose Rate in Area[4] (mrem/hr)	Dose[5] (person-mrem)
33. Connect cask temperature instrumentation and vent duct screens.	2 Ops	0.5	0.5	9	9
	1 HP		0.5	7	3.5
34. Perform cask operability tests.	1 Op	48	1.0	9	9
	1 HP		1.0	7	7
TOTAL					303.9 / 246.6 [5]

1. Number of personnel typically includes 2 to 4 operators and 1 HP technician.
2. Task duration includes total estimated time required to perform task.
3. Time in dose area includes only that time personnel are in a significant dose field.
4. The values in this column represent estimated average dose rates in the area where personnel will be working to perform the associated task. For operations where it is considered that temporary shielding will be effective in keeping dose rates ALARA, two values are presented (e.g., 50 / 5). The first value (50 mrem/hr) is the projected dose rate assuming no credit for temporary shielding. The second value (5 mrem/hr) takes credit for radiation attenuation by the use of temporary shielding.
5. Doses are calculated for times in dose fields without temporary shielding and with temporary shielding, such as 50 / 5, where the first value (50 mrem) is calculated based on the time spent in an area with the dose rate in the preceding column without temporary shielding, and the second value (5 mrem) is calculated based on the dose rate in the preceding column that takes credit for temporary shielding.

TABLE 7.4-2
(Page 1 of 4)

(deleted)

TABLE 7.4-2
(Page 2 of 4)

(deleted)

TABLE 7.4-2
(Page 3 of 4)

(deleted)

TABLE 7.4-2
(Page 4 of 4)

(deleted)

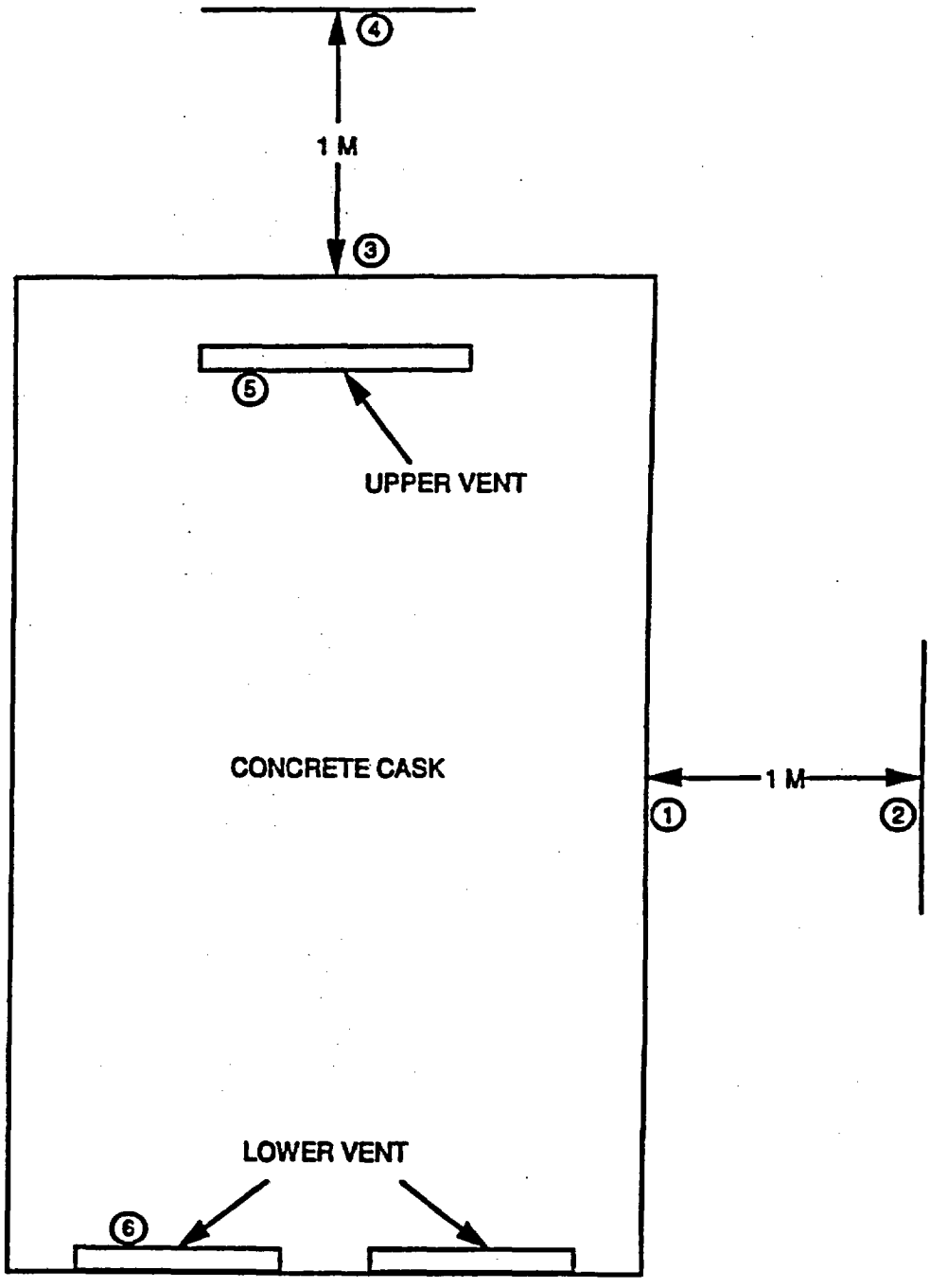

Figure 7.3-1

STORAGE CASK CALCULATED DOSE RATE LOCATIONS

PRIVATE FUEL STORAGE FACILITY
SAFETY ANALYSIS REPORT

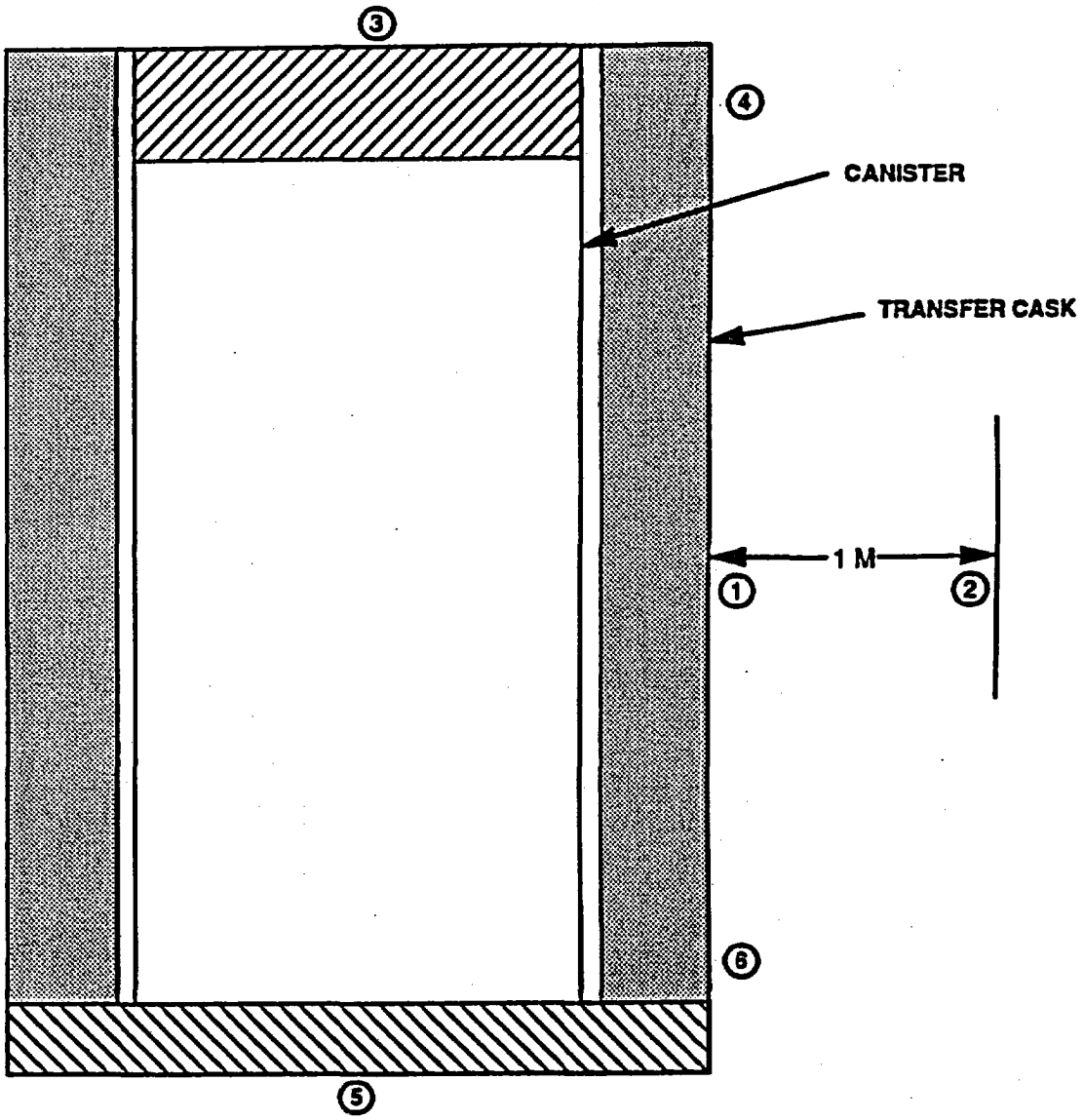

Figure 7.3-2

TRANSFER CASK CALCULATED DOSE RATE LOCATIONS

PRIVATE FUEL STORAGE FACILITY
SAFETY ANALYSIS REPORT

CHAPTER 8

ACCIDENT ANALYSES

TABLE OF CONTENTS

SECTION	TITLE	PAGE
8.1	OFF-NORMAL OPERATIONS	8.1-2
8.1.1	Loss of External Electrical Power	8.1-3
8.1.1.1	Postulated Cause of the Event	8.1-3
8.1.1.2	Detection of Event	8.1-3
8.1.1.3	Analysis of Effects and Consequences	8.1-3
8.1.1.4	Corrective Actions	8.1-6
8.1.2	Off-Normal Ambient Temperatures	8.1-7
8.1.2.1	Postulated Cause of the Event	8.1-7
8.1.2.2	Detection of Event	8.1-7
8.1.2.3	Analysis of Effects and Consequences	8.1-8
8.1.2.4	Corrective Actions	8.1-8
8.1.3	Partial Blockage of Storage Cask Air Inlet Ducts	8.1-9
8.1.3.1	Postulated Cause of the Event	8.1-9
8.1.3.2	Detection of Event	8.1-9
8.1.3.3	Analysis of Effects and Consequences	8.1-10
8.1.3.4	Corrective Actions	8.1-10

TABLE OF CONTENTS (cont.)

SECTION	TITLE	PAGE
8.1.4	Operator Error	8.1-11
8.1.4.1	Postulated Cause of the Event	8.1-11
8.1.4.2	Detection of Event	8.1-11
8.1.4.3	Analysis of Effects and Consequences	8.1-12
8.1.4.4	Corrective Actions	8.1-14
8.1.5	Off-Normal Contamination Release	8.1-16
8.1.5.1	Postulated Cause of the Event	8.1-16
8.1.5.2	Detection of Event	8.1-17
8.1.5.3	Analysis of Effects and Consequences	8.1-17
8.1.5.4	Corrective Actions	8.1-20
8.2	ACCIDENTS	8.2-1
8.2.1	Earthquake	8.2-2
8.2.1.1	Cause of Accident	8.2-2
8.2.1.2	Accident Analysis	8.2-4
8.2.1.3	Accident Dose Calculations	8.2-15b
8.2.2	Extreme Wind	8.2-16
8.2.2.1	Cause of Accident	8.2-16
8.2.2.2	Accident Analysis	8.2-16
8.2.2.3	Accident Dose Calculations	8.2-18

TABLE OF CONTENTS (cont.)

SECTION	TITLE	PAGE
8.2.3	Flood	8.2-20
8.2.3.1	Cause of Accident	8.2-20
8.2.3.2	Accident Analysis	8.2-20
8.2.3.3	Accident Dose Calculations	8.2-20
8.2.4	Explosion	8.2-21
8.2.4.1	Cause of Accident	8.2-21
8.2.4.2	Accident Analysis	8.2-23b
8.2.4.3	Accident Dose Calculations	8.2-23q
8.2.5	Fire	8.2-24
8.2.5.1	Cause of Accident	8.2-24
8.2.5.2	Accident Analysis	8.2-29b
8.2.5.3	Accident Dose Calculations	8.2-29q
8.2.6	Hypothetical Storage Cask Drop / Tip-Over	8.2-30
8.2.6.1	Cause of Accident	8.2-30
8.2.6.2	Accident Analysis	8.2-31
8.2.6.3	Accident Dose Calculations	8.2-35
8.2.7	Canister Leakage Under Hypothetical Accident Conditions	8.2-36
8.2.7.1	Cause of Accident	8.2-36
8.2.7.2	Accident Analysis	8.2-36
8.2.7.3	Accident Dose Calculations	8.2-40

TABLE OF CONTENTS (cont.)

SECTION	TITLE	PAGE
8.2.8	100% Blockage of Air Inlet Ducts	8.2-44
8.2.8.1	Cause of Accident	8.2-44
8.2.8.2	Accident Analysis	8.2-45
8.2.8.3	Accident Dose Calculations	8.2-45
8.2.9	Lightning	8.2-47
8.2.9.1	Cause of Accident	8.2-47
8.2.9.2	Accident Analysis	8.2-47
8.2.9.3	Accident Dose Calculations	8.2-48
8.2.10	Hypothetical Accident Pressurization	8.2-49
8.2.10.1	Cause of Accident	8.2-49
8.2.10.2	Accident Analysis	8.2-49
8.2.10.3	Accident Dose Calculations	8.2-50
8.2.11	Extreme Environmental Temperature	8.2-51
8.2.11.1	Cause of Accident	8.2-51
8.2.11.2	Accident Analysis	8.2-51
8.2.11.3	Accident Dose Calculations	8.2-52
8.3	SITE CHARACTERISTICS AFFECTING SAFETY ANALYSIS	8.3-1
8.4	BASIS FOR SELECTION OF OFF-NORMAL AND ACCIDENT CONDITIONS	8.4-1
8.5	REFERENCES	8.5-1

TABLE OF CONTENTS (cont.)

LIST OF TABLES

TABLE	TITLE
8.1-1	STORAGE SYSTEM OFF-NORMAL MAXIMUM AMBIENT TEMPERATURE EVALUATION
8.1-2	PARTIAL BLOCKAGE OF STORAGE CASK AIR INLET DUCTS TEMPERATURE EVALUATION
8.2-1	STORAGE SYSTEM EXTREME ENVIRONMENTAL TEMPERATURE EVALUATION

TABLE OF CONTENTS (cont.)

LIST OF FIGURES

FIGURE	TITLE
8.2-1	TORNADO MISSILE / EARTHQUAKE LOADS ON TRANSPORTER

CHAPTER 8

ACCIDENT ANALYSIS

In the preceding chapters, the design and operational features of the PFSF storage and handling systems that are classified as Important to Safety were identified and discussed. This chapter provides a description of the analyses performed for off-normal operating conditions and for a range of hypothetical accidents. The evaluations of off-normal events and accidents demonstrate that the PFSF structures, systems and components (SSCs) classified as Important to Safety are capable of performing their required functions for a wide range of postulated conditions satisfying the requirements of 10 CFR 72.122(b).

ANSI/ANS 57.9 (Reference 1) defines four categories of design events that establish the requirements to satisfy operational and safety criteria. A Design Event I is associated with normal operation. Design Event I conditions are addressed in Chapter 4. A Design Event II is associated with off-normal operations that can be expected to occur with moderate frequency, or on the order of once during a calendar year of PFSF operation. The Design Event II conditions are described in Section 8.1. A Design Event III is associated with infrequent events that could be reasonably expected to occur during the lifetime of the PFSF. These are described in Section 8.2. A Design Event IV is associated with plant-specific design phenomena, including natural phenomena and man-induced low probability events. These are also described in Section 8.2. Section 8.4 provides a discussion of the basis for selection of off-normal and accident conditions that are evaluated in this chapter.

The conservative nature of the assumptions and methods used in the analyses of off-normal and accident conditions represent an upper bound for the PFSF design basis events. The analyses demonstrate that the PFSF satisfies the applicable design criteria and regulatory limits. Therefore, the reported values of parameters, such as

temperatures and stress levels, envelope the values that would actually be experienced for the various postulated accident conditions.

The results of the off-normal and accident analyses described in this chapter are based on analyses documented in more detail in the HI-STORM 100 Cask System SAR (Reference 2).

8.1 OFF-NORMAL OPERATIONS

This section addresses events designated as Design Event II as defined by ANSI/ANS-57.9. The following are considered off-normal events:

- Loss of external electrical power,
- Off-normal ambient temperatures,
- Partial blockage of storage cask air inlet ducts,
- Operator error, and
- Off-normal contamination release.

There is no release of radioactive fission products from inside the canister or abnormal radiation levels associated with these off-normal operations. The only calculated consequence arises from the postulated release of surface contamination from the canister exterior, as discussed in Section 8.1.5. The resultant committed effective dose equivalent (CEDE) and the committed dose equivalent (CDE) to the maximally exposed organ at the Owner Controlled Area (OCA) boundary are shown to be less than 0.1 mrem in Section 8.1.5.3, well below the 10 CFR 72.106 criteria of 5 rem for accidents. Assuming an off-normal condition resulting in release of contamination to the atmosphere occurs on the order of once per year, total annual dose consequences at the OCA boundary from this event and radiation emanating from storage casks (Section 7.6) will not exceed 25 mrem, in accordance with 10 CFR 72.104.

8.1.1 Loss of External Electrical Power

A total loss of external AC electric power is postulated to occur as the result of a disturbance in the offsite electric supply system.

8.1.1.1 Postulated Cause of the Event

Loss of external power to the PFSF may occur as the result of natural phenomena, such as lightning, extreme wind, icing conditions, or as the result of undefined factors causing disturbances in the offsite electric grid that supplies the PFSF.

8.1.1.2 Detection of Event

Loss of the external electric power supply to the PFSF would be detected by noticing a loss of building lighting, loss of function of the powered equipment in the Canister Transfer Building and other equipment not automatically supplied with backup power, or by observation that the security diesel generator has automatically started operation.

8.1.1.3 Analysis of Effects and Consequences

Storage

There are no safety or radiological consequences of this condition because loss of power does not affect the integrity of the canisters and does not result in the release of radioactive material. PFSF spent fuel storage nuclear safety functions do not rely on electrical power for their accomplishment. Heat is removed from the canisters by passive means. None of the systems whose failure could be caused by loss of power are necessary for the continued performance of the PFSF spent fuel storage nuclear safety functions. The storage systems are qualified to safely protect the spent fuel for at least the 40-year PFSF operational life including adequate provisions for transfering

decay heat from the spent fuel to the surrounding environment without the need for electrical power.

An emergency diesel-generator is provided as a backup power supply for the security system, designated emergency lighting fixtures, the storage cask temperature monitoring system, and certain other equipment items whose continued energization is desirable.

Canister Transfer Operations

It is postulated that a loss of external electrical power event could occur during the canister transfer operations that are conducted in the PFSF Canister Transfer Building. This could take place at any point in the transfer sequence. Consideration is given to the loss of power: (1) while a loaded shipping cask, with the impact limiters removed, is being unloaded off the heavy haul trailer or rail car; (2) while the canister is being raised from the shipping cask into the transfer cask; (3) while the loaded transfer cask is being moved from above the shipping cask to above the storage cask; and (4) while the canister is being lowered from the transfer cask into the storage cask.

Three lifting devices are used in the shipping cask unloading/loading and canister transfer operations. The 200 ton overhead bridge crane, described in Section 4.7.2, is used to a) move HI-STAR shipping casks to and from the heavy haul trailers or rail cars and canister transfer cells, and b) handle the HI-TRAC transfer casks. The 150 ton semi-gantry crane, described in Section 4.7.2, is also used to handle the HI-TRAC transfer casks. The Holtec canister downloader, described in Section 4.7.3.5.1, is bolted onto the top of the HI-TRAC transfer cask and functions to raise and lower the HI-STORM canister during canister transfer operations. As discussed in Sections 4.7.2.1 and 4.7.3.5.1, the overhead bridge crane, semi-gantry crane, and canister

downloader are all designed to meet the criteria for single-failure-proof lifting devices.

The overhead bridge crane and the semi-gantry crane are designed to hold the lifted load in the event of loss of electrical power, with the brakes automatically actuated. The canister downloader is also designed to fail-as-is upon loss of electrical power or loss of hydraulic pressure, with two redundant sets of anti-drop cam locks. Therefore, a load drop accident during canister transfer operations due to loss of electrical power is not a credible event.

With a canister loaded into a transfer cask, a loss of electrical power will delay the transfer operation but will not challenge the integrity of the canister or safe storage of the spent fuel in the canister. There are no safety concerns associated with storage of a canister in its transfer cask until electrical power is restored and the canister transfer operation can resume. The transfer casks are designed to provide adequate shielding and decay heat removal from the canisters. The sides of the HI-TRAC transfer cask has both gamma and neutron shields, and the thick bottom shield door is designed to prevent excessive dose rates below the transfer cask, as shown in Chapter 5 of the HI-STORM SAR. In the event the transfer operation is interrupted due to loss of external electrical power, operators would take measures as necessary to assure adequate distance and/or additional shielding between themselves and the transfer casks to minimize doses until such time as electrical power is restored

and the transfer process can resume. The overhead bridge crane, semi-gantry crane and canister downloader are all capable of supporting their rated loads indefinitely without electrical power. Thermal analyses discussed in Chapter 4 of the HI-STORM SAR indicate that under steady state conditions with a canister stored in a transfer cask, the temperatures of the fuel, canister, and transfer cask components are within allowable limits.

8.1.1.4 Corrective Actions

Following a loss of electric power to the PFSF, radiation protection personnel would take necessary measures to maintain exposures to personnel in the vicinity of halted canister transfer operations as low as is reasonably achievable (ALARA). Utility repair personnel would be informed and would restore service by conventional means. Such an operation is routine for utility personnel.

8.1.2 Off-Normal Ambient Temperatures

Performance of the storage casks has been conservatively evaluated assuming abnormally high ambient temperatures of sufficient duration for the storage systems to reach steady-state conditions.

8.1.2.1 Postulated Cause of the Event

In order to bound expected steady-state temperatures of the storage system during periods of abnormally high temperatures, analyses were performed by the storage system vendors to calculate the steady-state temperatures for the storage cask, canister, and fuel for a continuous 100°F ambient condition with solar insolation. The design basis spent fuel decay heat generation rates were used for these analyses. The postulated 100°F ambient condition bounds the design basis average daily maximum temperature of 95°F for the PFSF. Since it would take 4 to 5 days for the storage systems to achieve steady-state thermal conditions, component temperatures resulting from the constant 100°F off-normal event with solar insolation bound those associated with the 95°F average daily maximum temperature condition.

8.1.2.2 Detection of Event

High ambient temperatures would be detected by normal weather monitoring and/or by evaluation of data from the storage cask temperature monitoring system. However, detection of off-normal ambient temperatures is not critical because there are no consequences, i.e., the storage system is designed to withstand such conditions.

8.1.2.3 Analysis of Effects and Consequences

Analyses have been performed for the HI-STORM storage system, assuming a continuous ambient temperature of 100°F for a sufficient duration to allow the system to achieve thermal equilibrium and design basis fuel with maximum decay heat. The analyses were performed using the ANSYS computer program (described in Chapter 4 of the HI-STORM SAR). The HI-STORM SAR (Chapter 4 of Reference 2) provides the detailed temperature analyses for the off-normal ambient temperature condition.

The maximum steady-state temperatures of key storage system components are provided in Table 8.1-1. As discussed in the HI-STORM SAR, the component temperatures are all within the vendor temperature limits. The canister and storage cask temperatures pose no threat of fuel cladding failure, canister breach, or reduction in shielding provided by the storage cask.

8.1.2.4 Corrective Actions

The HI-STORM storage system is designed to accommodate component steady state temperatures that would result from continuous exposure to an ambient temperature of 100°F, and no corrective actions are required.

8.1.3 Partial Blockage of Storage Cask Air Inlet Ducts

A complete blockage of one-half of the air inlet ducts is postulated for this event. The HI-STORM storage system has four air inlet ducts located at or near the base of the storage casks, so this event considers complete blockage of two air inlet ducts.

8.1.3.1 Postulated Cause of the Event

The air inlet ducts are protected from incursion of foreign objects by screens. The HI-STORM storage cask has four air inlets, oriented 90° apart. Events such as high winds, tornado and heavy snow could potentially cause partial duct blockage. Significant duct blockage would be detected by the storage cask temperature monitoring system periodic surveillance and be removed before achieving the steady state temperatures considered in the vendor analyses. This scenario demonstrates the inherent thermal margin and stability of the storage system.

8.1.3.2 Detection of Event

Temperatures representative of the thermal performance of each storage cask are remotely monitored by the storage cask temperature monitoring system and trended. Increased temperatures indicate possible blockage of the natural convection air flow path, most likely at the air inlet ducts, and personnel are dispatched to inspect storage casks with high temperatures. Also, quarterly surveillances consisting of visual inspections are performed for the purpose of detecting any blockage of the storage cask inlet and outlet ducts. Should blockage occur, it will be identified and removed in a timely manner.

8.1.3.3 Analysis of Effects and Consequences

Results of the analyses of the postulated 50 percent blockage condition are included in the HI-STORM SAR (Chapter 11 of Reference 2). The maximum steady state temperatures of storage system components are provided in Table 8.1-2. As discussed in the SAR, the component temperatures are all within the vendor temperature limits.

8.1.3.4 Corrective Actions

Upon receiving indication of high storage cask(s) temperatures, PFSF personnel will inspect the affected cask(s) ducts for blockage. Once an obstruction has been identified, PFSF personnel will remove the debris or other foreign material blocking the ducts. Since screening is provided for all air inlets, material blocking inlet ducts is expected to be on the outside and may be removed by hand or hand-held tools. Dose rates at the air inlets are higher than the nominal dose rates at the storage cask walls, so a worker clearing the vents will be subject to above-normal dose rates. As a worst case estimate, it is assumed that a worker kneeling with hands on the vent inlets requires up to 30 minutes to clear the vents. Assuming the affected cask has the highest dose rates associated with a storage cask containing design fuel, and assuming nearby casks contain PWR spent fuel having the 40 GWd/MTU burnup and 10 years cooling time characteristics discussed in Section 7.3.3.5, a worker could accrue approximately 19.3 mrem to the hands and forearms and approximately 29.3 mrem to the chest and body from the storage cask with blockage and from nearby casks in the array, assuming the affected and nearby storage casks are HI-STORM casks (Reference 44).

8.1.4 Operator Error

This event consists of off-normal operator load handling errors that develop from the canister impacting against the inside of the shipping, transfer, or storage cask.

8.1.4.1 Postulated Cause of the Event

Several postulated events involving off-normal handling have been considered, all caused by personnel error. Load drops by the overhead bridge crane, the semi-gantry crane, or the canister downloader are not considered credible because of the single-failure-proof design of these lifting systems. Postulated events are: (1) while lifting the canister out of the shipping cask and into the transfer cask, personnel error could result in lifting the canister too high so it contacts the top of the transfer cask; (2) during placement of the canister into the storage cask, improper operation of the crane or canister downloader may cause a lateral impact against the inside of the storage cask (this could also occur during transfer of the storage cask to a storage pad, where an inadvertent movement could cause lateral impact of the canister against the inside of the storage cask); and (3) during canister lowering into the storage cask with the transfer cask improperly aligned with the storage cask, the canister could encounter interference, such as catching on the edge of the storage cask.

8.1.4.2 Detection of Event

The off-normal handling event would be detected by facility operators and personnel monitoring canister transfer operations or storage cask movement from the Canister Transfer Building to a storage pad. Audible noises would be heard from the canister impacting a cask, and slackening of the slings that connect the canister to the crane hook or to the canister downloader would be observed.

8.1.4.3 Analysis of Effects and Consequences

Off-normal handling events are evaluated in the HI-STORM SAR. The following is a summary of the evaluations of the different credible off-normal handling events.

Horizontal Impacts of the Canister

The horizontal impact of the canister event assumes that the canister impacts the side of the storage cask at a speed of 2 ft/sec, which is equivalent to a drop from a height of 0.75 inch. The resulting deceleration is conservatively calculated to be 17.5 g for the representative storage system (Section 11.1.5 of Reference 78). This acceleration is bounded by those determined for the canisters in drop accidents. Therefore, the associated stresses resulting from this accidental impact are bounded by those for design basis drop accidents. Canister accelerations analyzed due to postulated side drop/tipover accidents are 45 g for HI-STORM (Reference 2).

Interference During Canister Lowering Operations

The interference during canister lowering operations event postulates that the canister impacts the storage cask edge or side while the canister is lowered into the storage cask. Procedures to ensure alignment of the transfer cask with the storage cask should prevent this condition from occurring, but it is assumed that operator error results in inadequate clearance / misalignment. Since the only force acting on the canister during lowering is gravity, the worst case condition would be a load of 1 g on the canister bottom or side, if it were completely supported by the interference. The stresses applied to the canister in this scenario are again bounded by those assessed for the canister in drop accidents, analyzed in the HI-STORM SAR. The analyses determined that the canister vessel and its internals would maintain their structural integrity and continue to perform their safety functions for the drop accidents.

8.1.4.4 Corrective Actions

In the case of interference during canister lifting, the canister downloader operator lowers the canister. Workers would inspect the alignment of the transfer cask on the shipping cask, make necessary adjustments, and complete the lift. If unable to satisfactorily correct the situation, workers would lower the canister back to the bottom of the shipping cask, lift the transfer cask off the shipping cask, and determine the cause of any interference/misalignment.

In the horizontal impact scenario, the canister is designed to withstand horizontal acceleration loads that bound the canister horizontal impacts on the storage cask discussed above. No corrective actions are necessary.

To recover from interference during the canister lowering situation, the crane or canister downloader operator would immediately stop lowering the canister, inspect the area for interference, and raise the canister back into the transfer cask. The personnel involved in the transfer operation would check the alignment of the transfer cask on the storage cask. If necessary, the transfer cask will be lifted off the storage cask to permit inspection for foreign objects.

THIS PAGE INTENTIONALLY LEFT BLANK

THIS PAGE INTENTIONALLY LEFT BLANK

8.1.5 Off-Normal Contamination Release

This event involves the postulated release of surface contamination from the exterior of a canister to the environment.

8.1.5.1 Postulated Cause of the Event

The canister may become slightly contaminated during loading operations of the spent fuel into the canister at the originating nuclear power plant. If this contamination is not detected and removed prior to shipment to the PFSF, it is possible for an impact of the canister to dislodge some of the removable surface activity resulting in a release to the atmosphere.

Contamination of the canister at the originating nuclear power plant is unlikely since during wet loading of fuel the canister is contained within a transfer cask when in the spent fuel pool and the annulus between the canister and the transfer cask is filled with clean water. The annulus is sealed at the top, thereby preventing entry of unfiltered contaminated pool water into the annulus. For dry transfers, it is less likely for contamination to occur since the canister is not inserted into a spent fuel pool. Surveys are performed at the originating nuclear power plant to assess removable contamination levels on the outside of the canister, and canisters having removable contamination levels in excess of specified limits are not permitted to be shipped to the PFSF. Upon receipt of canisters at the PFSF, accessible canister surfaces (canister lid and side several inches below lid) are again surveyed for removable contamination, and canisters having removable contamination levels in excess of the limits specified in the PFSF Technical Specifications are required to be returned to the originating nuclear power plant for decontamination.

8.1.5.2 Detection of Event

A release of some removable activity from the exterior surface of the canister could possibly occur as the result of impacts during the canister transfer operation. Significant impact of the canister during transfer operations would be observed by personnel associated with the transfer operation, which includes health physics coverage that would detect an activity release.

8.1.5.3 Analysis of Effects and Consequences

The following assesses the effects of postulated release of contamination from the external surfaces of a canister, conservatively assuming removable contamination levels of 1 E-4 μCi/cm^2 (22,200 dpm/100 cm^2) over the entire external surface area of a canister, much higher than is anticipated for canisters received at the PFSF and slightly above the removable surface contamination limit for accessible canister surfaces specified in the PFSF Technical Specifications (22,000 dpm/100 cm^2) for beta/gamma activity. It is conservatively assumed that an event causes 100 percent of the canister external surface contamination to be released to the atmosphere.

For the dose assessment, it is assumed that all of the contamination on the external surfaces of a canister is Co-60. This assumption is justified based on the following: If contamination is present on the exterior surface of the canister, it is likely to come from the radioactive particulates suspended in the spent fuel pool water. Radioactive particulates in the pool at the time the spent fuel is loaded into a canister are mostly the long half-life corrosion products from the spent fuel surface, which might be dislodged during fuel movement. The most prominent corrosion products in the spent fuel pool are Co-60, Co-58, Fe-55, Fe-59, Mn-54, Cr-51, and Zn-65. Co-60 has the highest inhalation dose conversion factors and the longest half-life (5.27 years).

Other isotopes may be present in the spent fuel pool water at nuclear power plants and could be considered as a potential source of contamination. However, many of these isotopes are volatile (such as I-129, I-130, I-131, I-132, I-133, etc.) and would release soon after the canister is removed from the pool. Others have short half-lives and would decay much sooner than Co-60. Some isotopes emit weak Beta radiation (Kr-85 and H-3) and as such do not provide a significant contribution to the exposure of personnel either by direct radiation or inhalation.

Co-60 is recognized by the NRC (Chapter 7, Table 7.1 of NUREG-1536, Reference 24) as being present in the form of crud on fuel rods and is listed as the only nuclide which contributes significantly to doses from the postulated radioactivity release that doesn't come from failed fuel. Co-60 is the predominant isotope of concern with corrosion and wear products in nuclear power plants. Therefore, the assumption that all the surface contamination on the spent fuel canister is Co-60 provides a conservative approach to assessing the potential effects of this accident scenario.

Doses resulting from this postulated release of contamination from the external surfaces of a canister were calculated in Reference 45. Assuming the contamination is Co-60 particulate activity evenly distributed at a concentration of 1 E-4 $\mu Ci/cm^2$ over the entire external surface of a HI-STORM canister, with a surface area of approximately 312,000 cm^2, there would be a total activity inventory of approximately 31.2 μCi. The nearest distance from a storage pad to the OCA fence (site area boundary) is 646 meters, and the nearest distance from the Canister Transfer Building to the OCA fence is 500 meters. A χ/Q of 1.94 E-3 sec/cubic meter was calculated in accordance with Regulatory Guide 1.145 (Reference 6), assuming a distance of 500 meters to the dose receptor, a wind speed of 1 meter/sec, atmospheric stability class F, with no consideration for plume meander.

The dose conversion factor for intake of Co-60 is specified in EPA Federal Guidance Report No. 11 (Reference 7) as a committed effective dose equivalent (CEDE) of 5.91 E-8 Sv/Bq, equal to 219 mrem/μCi. The highest dose conversion factor for committed dose equivalent (CDE) to any organ from Co-60 is that for the lungs, 3.45 E-7 Sv/Bq, equal to 1,277 mrem/μCi. An adult breathing rate of 3.3 E-4 cubic meters per second is assumed in accordance with Reference 7. A respirable fraction of 1.0 is assumed. Assuming an individual is located within the plume 500 meters from the release point for the duration of the release, the individual would receive a CEDE of 4.37 E-3 mrem and a CDE to the lungs of 2.55 E-2 mrem. The dose to an individual at the OCA boundary from external exposure to radiation emitted by the plume (submersion dose) was also calculated, using the effective dose conversion factor for Co-60 specified in EPA Federal Guidance Report No. 12 (Reference 30). This dose conversion factor, representative of exposure to a semi-infinite cloud of radioactive material, is 1.26 E-13 Sv/sec per Bq/m^3, equal to 4.66 E-4 mrem/sec per μCi/m^3. The submersion dose from external exposure to Co-60 in the plume was calculated to be 2.82 E-5 mrem. Adding the external dose from submersion to the internal CEDE and CDE to the lungs results in a total effective dose equivalent (TEDE) of 4.40 E-3 mrem, and a total lung dose of 2.55 E-2 mrem. These doses are well below the 10 CFR 72.106(b) criteria of 5 rem TEDE and 50 rem lung dose that apply to accidents. Assuming an off-normal condition resulting in release of contamination to the atmosphere occurs on the order of once per year, total annual dose consequences at the OCA boundary from this event and radiation emanating from storage casks (Section 7.6) will not exceed 25 mrem, in accordance with 10 CFR 72.104.

The dose was also calculated to onsite personnel assumed to be located 150 meters from the release point using the same methodology and assumptions discussed above, with a calculated χ/Q of 1.40 E-2 sec/cubic meter. Onsite personnel 150 meters from the release point would receive a CEDE of 3.15 E-2 mrem, a CDE to the lungs of 1.84 E-1 mrem, and an external dose due to submersion of 2.04 E-4 mrem. Adding the

external dose from submersion to the internal CEDE and CDE to the lungs results in a TEDE of 3.17 E-2 mrem and a total lung dose of 1.84 E-1 mrem.

8.1.5.4 Corrective Actions

Even if relatively high levels of contamination are encountered on the external surfaces of a canister, which is not anticipated, no corrective action is necessary. Doses at the OCA fence resulting from release of activity from a contaminated canister would be negligible.

8.2 ACCIDENTS

Design events of the third and fourth types as defined in ANSI/ANS-57.9 are considered in this section. A Design Event III consists of those infrequent events that could reasonably be expected to occur during the lifetime of the PFSF. A Design Event IV consists of natural phenomena and human-induced low probability events that are postulated because their consequences may result in the maximum potential impact on the immediate environs but are not necessarily credible. Hypothetical accidents, which are analyzed in this section, are also considered as Design Event IV. Their consideration establishes a conservative design basis for SSCs classified as important-to-safety.

The following accident or class III and IV design events are considered in this chapter:

- Earthquake,
- Extreme wind,
- Flood,
- Explosion,
- Fire,
- Hypothetical storage cask drop / tip-over,
- Canister Leakage Under Hypothetical Accident Conditions,
- 100% blockage of air inlet ducts,
- Lightning,
- Hypothetical accident pressurization, and
- Extreme environmental temperature.

Each of these accidents are described in the following sections. These evaluations show that the release of radioactive material is controlled in compliance with 10 CFR 72.106 and 72.126(d).

8.2.1 Earthquake

An earthquake is classified as a natural phenomenon Design Event IV as defined in ANSI/ANS-57.9.

8.2.1.1 Cause of Accident

Earthquakes are associated with faults in the upper crust of the earth's surface. Earthquake magnitudes and associated ground motions in Utah are based on historical and pre-historic data and are contained in maps and tables as referenced in Section 2.6. The PFSF is located west of the Rocky Mountain Front (approximately 104° west longitude) as described in 10CFR Part 72.102 and the site area has the potential for seismic activity. Consequently, the site has been evaluated for geological and seismological characteristics to determine the appropriate seismic design criteria (Sections 2.6 and 3.2.10). SSCs classified as Important to Safety are required to be designed to resist the effects of the design basis ground motion in accordance with the requirements of 10CFR 72.122(b).

In the original license application submittal, a PFSF site specific earthquake was calculated for the PFSF site using the deterministic methodology of 10 CFR 100 Appendix A. This earthquake was characterized by response spectrum curves developed specifically for the site with a zero period acceleration of 0.67 g horizontal (two directions) and 0.69 g vertical. The response spectrum curves for the PFSF original site specific deterministic design earthquake are documented in Reference 28.

The regulations for siting nuclear power plants (10 CFR 50 Appendix S and 10 CFR 100.23) were amended in 1997 to allow the use of the probabilistic seismic hazard assessment (PSHA) methodology in order to recognize the inherent uncertainties in geologic and seismologic parameters that must be addressed in determining the

seismic hazard at a nuclear power plant site. In response to the regulatory changes in seismic analysis methodology for siting nuclear power plants, and anticipated changes to Part 72 (SECY-98-126), a PSHA has been performed for the PFSF for vibratory ground motions and surface fault displacement. The seismic design basis for the PFSF has been revised (References 29 and 41), with the current design basis ground motions based on the PSHA, as discussed in Sections 2.6 and 3.2.10. The design basis ground motions are characterized by site specific response spectrum curves having peak ground accelerations of 0.711g horizontal (two directions) and 0.695g vertical (based on Reference 81), as identified in Sections 2.6.4.9 and 3.2.10.1.1.

The site specific cask stability analyses were initially performed based on the PFSF original site specific deterministic design earthquake, which has been superseded by the current design basis ground motion established by the PSHA. These analyses determined that while the casks do rock slightly, they do not tip over, nor does rocking result in collision of storage casks with adjacent casks. In addition, the analyses determined that while the casks could slide, they could not slide off the storage pad, nor would sliding result in collision of storage casks with adjacent casks. Since the initial cask stability analyses were performed, Holtec (the HI-STORM storage cask vendor) has performed a cask stability analysis for the HI-STORM storage cask, based on the PSHA design basis ground motion (0.711g horizontal and 0.695g vertical). The results of this analysis are included in the following section (Section 8.2.1.2).

The storage system structural design bases, which identifies earthquake loads and the structural design of the storage system, are contained in Section 4.2.1.5.1 (H).

8.2.1.2 Accident Analysis

The HI-STORM storage casks are analyzed for a generic design earthquake as selected by Holtec and as described in its SAR (Reference 2). The HI-STORM storage casks were also analyzed for the previously determined PFSF site specific deterministic design earthquake, represented by response spectrum curves with a zero period acceleration of 0.67g horizontal (two directions) and 0.69g vertical. More recently, the HI-STORM storage casks were analyzed for the PFSF site specific PSHA design basis ground motion (0.711g horizontal and 0.695g vertical, based on Reference 81), as discussed below.

In addition to Holtec's PFSF site specific cask stability analyses, a separate and independent site specific cask stability analysis was performed by a structural-mechanical engineering consultant specializing in seismic dynamic analysis of equipment and structures. The analysis was performed by J. D. Stevenson, Consulting Engineer, for the purpose of independently confirming the cask stability conclusions of the vendor's analyses. This bounding case analysis considered the HI-STORM storage casks, and was based on the original PFSF deterministic design earthquake. The analysis demonstrates the storage casks will not tip over or slide

excessively in an earthquake and confirms the conclusions of Holtec's analysis of the capability of its storage casks to withstand the PFSF deterministic design earthquake.

A summary of Holtec's cask stability analysis and the independent cask stability analysis performed by J. D. Stevenson, Consulting Engineer, follows. Holtec has completed the analyses of the HI-STORM storage casks for the PSHA design basis ground motion (0.711g horizontal and 0.695g vertical). The results of this more recent analysis, which supercede the analysis for the PFSF deterministic design earthquake, are presented below.

HI-STORM Cask Stability Analysis

The HI-STORM generic seismic cask stability analysis is described in Section 3.4.7.1 of the HI-STORM SAR. The analysis basis is a conservative two-dimensional quasi-static evaluation of incipient tipping or sliding. The seismic input is: (1) a horizontal force, applied at the cask centroid, equal to the loaded cask weight multiplied by the Zero Period Acceleration (ZPA) associated with the resultant of two horizontal seismic events; and (2), a vertical force, applied at the cask centroid, equal to the loaded cask weight multiplied with a ZPA for the vertical earthquake.

The generic analysis determined that inertia loads produced by the seismic event are less than the 45 g loads for which the storage system is designed. Stresses in the canister due to the seismic event are bounded by stresses resulting from the hypothetical end drop and side drop events described in Section 3.4.10 and Appendix 3A of the HI-STORM SAR. Further, as discussed in Appendix 3.B of the HI-STORM SAR, ready retrievability of the MPC is assured under the most severe postulated accident event, hypothetical cask tipover.

The generic cask stability analysis in the HI-STORM SAR for incipient tipping or sliding does not bound the PFSF design basis ground motion. In order to demonstrate the cask stability under site specific conditions, site specific cask stability analyses have been performed by the cask vendor. Results of the initial HI-STORM cask stability analysis for the PFSF deterministic design earthquake are documented in Reference 8. Holtec has also performed a cask stability analysis for the PSHA design basis ground motion (Reference 82), described below.

The HI-STORM storage cask was analyzed using proprietary qualified software for the PFSF design basis ground motion characterized by response curves with a zero period acceleration of 0.711g in both horizontal directions and 0.695g in the vertical direction. The analysis considered soil-structure interaction, actual storage pad size, and a variety of cask placements on the pad.

The site specific cask stability analysis was performed by developing three statistically independent acceleration time histories from the site specific response spectra, generated from the PSHA. This seismic input was applied three-dimensionally to the structural system model, which included the storage pad, soil springs, and various cask placements to determine the worst case response. The site specific seismic analysis employs a mass-spring representation of the cask behavior and boundary conditions, and a numerical integration of the dynamic equations.

Each cask is modeled as a two body system with each overpack described by six degrees of freedom to capture the inertial rigid body motion of the overpack. Within each overpack the internal MPC is modeled by an additional five degrees of freedom which are sufficient to define all but the rotational motion of the MPC about its own longitudinal axis, a motion which is of no significance in this analysis. Compression-only spring constants are developed to simulate the contact stiffness between the MPC and the overpack cavity. Interface spring constants are developed for the overpack-to-

concrete pad linear compression only contact springs and for the associated friction springs at each of the 36 contact locations for each overpack on the pad.

Soil-structure interaction is incorporated into the model by the development of soil springs to reflect the characteristics of the underlying soil mass beneath the pad. Horizontal, vertical, rocking and torsional spring rates were calculated along with appropriate soil mass and damping values and applied at the pad-soil interface. The sensitivity of the cask response to upper and lower bounds of soil-spring interaction was studied and determined not to have a significant effect on cask displacements.

The Reference 82 cask stability analysis was performed by computer methods using a cask-to-pad coefficient of friction equal to 0.8 (which emphasizes tipping potential) to bound the maximum displacement of the cask. Previous cask stability analyses (e.g., Reference 42) determined that the tipping potential exceeds the sliding potential. The results of the site-specific analysis show that the storage casks will not tip over or slide to the extent of impacting adjacent casks during the PFSF design basis ground motion.

For the limiting case with a 0.8 coefficient of friction (maximum tip), there is minimal rotation of the cask vertical centerline. The maximum excursion of the top of the cask during rocking, identified as the lateral motion of the cask top center point from its initial position, is less than 4 inches for any of the configurations. The cask stability analyses (Reference 82) evaluated a case with a coefficient of friction of 0.2 to maximize cask sliding, and a maximum sliding displacement for the casks of 1.96 inches was computed, which is less than the maximum tipping displacement as anticipated. For both coefficients of friction considered, cask motions are generally in-phase with each other. The casks are spaced on the storage pad at 15 ft center-to-center along the short dimension of the pad, and 16 ft center-to-center along the pad's long dimension, which provides at least 47.5 inches clear between casks (cask diameter is 132.5 inches) and provides a considerable margin of safety against impacts between casks during a seismic event.

A formal evaluation was also performed for PFS by Holtec International to assess the impact of potential movement of the cask storage pads during a seismic event on the stability of the HI-STORM storage casks resting on the pad (Reference 82, Attachment 1). This evaluation concludes that any sliding of the pad relative to the underlying soil has the beneficial effect of reducing or eliminating cask movements relative to the pad.

The site specific cask stability analysis performed by the cask vendor demonstrates that the HI-STORM storage cask will not tip over in a seismic event. The calculated cask movements are much less than the cask spacing on the storage pad and as such, the storage casks are shown not to impact one another or move off of the storage pad in a seismic event. Therefore, no radioactive material would be released from the storage system when subjected to the DE. The HI-STORM storage system thus meets the general design criteria of 10CFR 72.122(b), as it relates to earthquakes.

THIS PAGE INTENTIONALLY LEFT BLANK

THIS PAGE INTENTIONALLY LEFT BLANK

THIS PAGE INTENTIONALLY LEFT BLANK

Independent Cask Stability Analysis

An independent cask stability analysis was performed by J. D. Stevenson, Consulting Engineer, for the purpose of confirming the conclusions of Holtec's site specific cask stability analysis. The HI-STORM MPC-32 loaded canister and storage cask combination weighed 356,521 lb. and had a center of gravity of 118 in. above the base of the cask (HI-STORM SAR, Revision 1, Tables 3.2.1 and 3.2.3).

The cask stability analysis was performed using a two step approach. First, the cask/pad/soil system was modeled using the SUPER SASSI/PC computer program (Reference 11) to include the effects of soil-structure interaction. The results of the SUPER SASSI/PC analysis were then used in a non-linear time-history analysis using the ANSYS (Reference 12) computer program. The ANSYS analysis was for a single cask, considered essentially as a rigid body, evaluated for overturning. Additional rigid body analysis was also considered, as suggested by Housner (Reference 13), to check the effects of cask tip over and sliding as a rigid body.

The independent cask stability analysis utilized the PFSF deterministic design earthquake response spectra curves, having a zero period acceleration of 0.67 g horizontal (two directions) and 0.69 g vertical. The free field ground surface response spectra were used to develop 3 independent synthetic time histories using the SPECTRA (Reference 14) computer program. These time histories were used as input to the SUPER SASSI/PC computer analysis to evaluate the soil-structure interaction.

The model included the cask storage pad (3 ft. thick x 30 ft. wide x 64 ft. long) with eight casks in place. The casks were idealized by rigid sticks (beam elements) with translational and rotational inertia concentrated at the cask center of gravity. Rigid links were introduced to simulate the physical sizes of the cask bases. The model was excited by the three acceleration time-histories obtained from SPECTRA. The results of the SUPER SASSI/PC computer analysis were the time-history motions at the base of the cask. Computed results showed that the rocking motions of the storage pad were practically negligible in comparison with the translational motions.

The output time-history motions at the base of the cask were then applied to the non-linear ANSYS analysis using a single cask. Several analyses were performed using ANSYS to evaluate the potential for the cask to tip during the seismic event as simulated by the storage pad seismic motions. The ANSYS models used included both two-dimensional and three-dimensional beam element models. Contact elements were used to model the interface between the cask and the storage pad. The cask was modeled using rigid beam elements with a single vertical element for the cask. The cask base was modeled with two horizontal elements at the base extending to the outer edges of the cask diameter for the two-dimensional model and multiple horizontal elements at thirty degrees spacing for the three-dimensional model. The mass of the cask was lumped at the cask center of gravity located on the vertical element. The model was loaded with gravity prior to earthquake loading. Friction effects were included using a coefficient of friction of 0.5 between the cask and the pad. The cask tip over analysis was based on a constant friction force (lateral resistance at the base of the cask model) active during the stability analysis which conservatively overestimates the overturning potential of the cask. In addition, some rigid body dynamic analyses were performed to provide insight into the behavior of the ANSYS models, and also to evaluate the sliding effects. Rigid body rocking analysis indicates a maximum angle of cask rotation less than 1.5 degrees. Rigid body sliding response of the cask was calculated and found to be less than one foot.

From the analysis performed, it was determined that the most conservative results (and therefore the greatest overturning response) were obtained with the two-dimensional model with the displacement motion applied only at the center base node of the model. The results of the two-dimensional analyses indicate that the rotation at the base of the cask model is approximately 7.2 degrees, which will cause the storage cask top to move laterally approximately 29.0 inches. For the three-dimensional model, a maximum cask rotation of approximately 1.3 degrees was obtained, which will cause the storage cask top to move laterally approximately 5.2 inches. It should be noted that for the three-dimensional model, two components of displacement loading were applied simultaneously. Whereas, for both the two-dimensional and three-dimensional models, the vertical earthquake effects were included as an acceleration time history.

The site specific cask stability analysis performed by J. D. Stevenson, Consulting Engineer, demonstrates that a bounding storage cask configuration will not tip over or slide excessively in an earthquake. The computed tip angle of the cask was 7.2 degrees for the two-dimensional model and 1.3 degrees for the three-dimensional model for the prescribed seismic criteria and soil conditions. Lateral displacements of the top of the cask are well below the point at which the cask would tip over (approximately 28.85 degrees). And, using a coefficient of friction of 0.5, sliding is less than one foot. These cask movements are within the clear distances between casks (47.5 inches) and will preclude impact of adjacent casks.

Canister Transfer Operations

Canister transfer operations are performed in the Canister Transfer Building and described in Chapter 5. The overhead bridge crane, located inside the building, is used to handle the shipping casks and transfer casks. The semi-gantry crane is used to handle the transfer

casks. The HI-STORM canister transfer operation uses the canister downloader to raise and lower the canister, which is a hydraulically powered lifting device that is bolted onto the top of the HI-TRAC transfer cask.

The overhead bridge crane and the semi-gantry crane are designed to withstand the PFSF design basis ground motion (determined by the PSHA with a 2,000-yr return period), as is the Canister Transfer Building which provides the structural support for the cranes. As discussed in Section 4.7.2, the overhead bridge crane and semi-gantry crane are designed to meet the criteria for single-failure-proof lifting devices. The canister downloader is also a single-failure-proof lifting device (Section 4.7.3.5.1), which is designed to withstand the PFSF design basis ground motion. The overhead bridge crane, semi-gantry crane, and canister downloader are capable of withstanding the PFSF design basis ground motion during the critical lift without toppling or dropping the load. Therefore, the PFSF design basis ground motion will not cause a load drop accident during lifting of the shipping cask, transfer cask, or canister.

As discussed in Chapter 5, the overhead bridge crane lifts a HI-STAR shipping cask off the heavy haul trailer or rail car and moves it into one of the canister transfer cells, where it is placed upright on its bottom end in preparation for the canister transfer operation. Prior to disconnecting the crane and unbolting the lid, the shipping cask is secured in place by attaching seismic support struts between the cask and the transfer cell building columns (Section 4.7.1.4.1). The seismic support struts are designed to resist forces resulting from the PFSF design basis ground motion and maintain the shipping cask in its upright position. Once the lid is unbolted and removed, the canister is accessible through the top of the shipping cask. Canister lifting attachments and hoist slings are installed on the canister lid and the transfer cask placed onto the shipping cask by means of the overhead bridge crane or semi-gantry

crane. This HI-STORM stacked cask configuration that occurs during the canister transfer process, with a transfer cask resting on either a shipping or storage cask, was evaluated for stability for the PFSF design basis ground motion (see Section 4.7.3.5.1).

In the HI-STORM transfer operation, the HI-TRAC transfer cask, resting on either the HI-STAR shipping cask or the HI-STORM storage cask, can remain connected to either the overhead bridge crane or the semi-gantry crane throughout the transfer operation. Continuous connection of the crane to the transfer cask provides assurance that the transfer cask cannot topple in the event of forces associated with the PFSF design basis ground motion. In the event the crane is disconnected from the HI-TRAC transfer cask, the seismic support struts are attached to the transfer cask prior to disconnecting the crane from the transfer cask in order to assure cask stability in the event of an earthquake.

The seismic support struts are physically connected to the building columns of the transfer cell and are designed to resist forces resulting from the PFSF design basis ground motion and maintain the HI-TRAC transfer cask in its upright position. Therefore, the stacked cask configuration is stable and will withstand the forces associated with the PFSF design basis ground motion without a drop accident.

8.2.1.3 Accident Dose Calculations

The PFSF design basis ground motion is not capable of damaging the canisters or storage casks during canister storage operations. The HI-STORM storage cask was explicitly analyzed for and shown to withstand the PFSF design basis ground motion. The Canister Transfer Building structure is designed to withstand the PFSF design basis ground motion. Additionally, the overhead bridge crane, semi-gantry crane, and canister downloader are designed to comply with the single-failure-proof criteria, which requires them to withstand the PFSF design basis ground motion with the maximum critical load in the lifted position during the seismic event, without dropping the load (Section 3.2.10.2.10). No radioactivity would be released in the event of an earthquake and there would be no resultant dose.

8.2.2 Extreme Wind

The extreme design basis wind is derived from the design basis tornado. Extreme wind is classified as a natural phenomenon Design Event IV as defined in ANSI/ANS-57.9.

8.2.2.1 Cause of Accident

Extreme winds due to passage of the design tornado, defined in Section 3.2.8, are postulated to occur as a severe natural phenomenon.

8.2.2.2 Accident Analysis

The site is located in tornado Region III as defined in Regulatory Guide 1.76 (Reference 15). The design basis tornado loading for this region is defined as a tornado with a maximum wind speed of 240 mph and a 1.5 psi pressure drop occurring at a rate of 0.6 psi/sec, including the effects of postulated Spectrum I or II tornado generated missiles that could be created by the passage of the tornado as identified in Section 3 of NUREG-0800 (Reference 16).

Storage Casks

The HI-STORM storage system is designed to withstand loads associated with the most severe meteorological conditions, including extreme winds, pressure differentials, and missiles generated by a tornado. Results of the evaluation of effects of a tornado on the HI-STORM storage system are described in the HI-STORM SAR (Reference 2). The HI-STORM storage system is designed to the design basis tornado criteria for tornado Region I (Maximum wind speed of 360 mph and 3.0 psi pressure drop occurring at a rate of 2.0 psi/sec), which substantially envelopes the Region III criteria for the PFSF.

The HI-STORM SAR demonstrates that the 360 mph wind loading on the cask area produces insufficient forces to tip over the casks. Spectrum I missiles are assumed to impact a storage cask in a manner that produces maximum damage. The combination of tornado winds with the most massive Spectrum I missile, a 3,968 lb (1,800 kg) automobile traveling at 126 mph, was also evaluated in accordance with Section 3 of NUREG-0800. The wind tipover moment was applied to the cask at its maximum rotation position following the worst-case missile strike. Calculations presented in the HI-STORM SAR determined that the restoring moment far exceeded the overturning moment and the storage cask would not tip over.

While the calculations demonstrate that design missiles could not cause the storage casks to tip over, they could inflict localized damage. The HI-STORM SAR demonstrates that none of the Spectrum I design missiles are capable of penetrating the storage cask and striking the canister, and canister confinement would not be affected. However, design missiles could cause a localized reduction in shielding. The HI-STORM SAR concludes that while tornado missiles could cause localized damage to the radial shielding of a storage cask resulting in increased dose rates on contact with the affected area, the damage will have negligible effect on the dose at the OCA boundary.

The HI-STORM storage casks at the PFSF will have a minimum concrete compressive strength of 3,000 psi, as discussed in Section 8.2.6.2, which is lower than the 4,000 psi minimum concrete compressive strength specified in the HI-STORM SAR. Holtec evaluated potential effects of the reduced concrete strength on the storage cask structural analyses in Reference 84, and concluded the following: "In the HI-STORM 100 FSAR, the only numerically significant use of concrete strength appears in the evaluation of the overpack resistance to the 8" diameter penetrant tornado missile. Appendix 3.G in the HI-STORM 100 FSAR details the tornado missile evaluation. It is shown in that appendix that the outer steel shell is penetrated but the thick annular

layer of concrete provided succeeds in limiting the depth of penetration. A reduction in the compressive strength of the overpack concrete will lead to a slightly larger depth of penetration. The attachment to this document [Reference 84] contains the relevant portions of the FSAR appendix revised to use a concrete compressive strength of 3000 psi at 28 days. This value is bounding for greater concrete compressive strengths. A new penetration depth is computed but the conclusion is not altered. The MPC [multi-purpose canister] containing the spent nuclear fuel remains fully protected from a direct impact by the missile." Holtec's analysis of the depth of penetration of the 8" diameter penetrant tornado missile is attached to Reference 84, and is entitled "Revision of Relevant Sections of Appendix 3.G from HI-STORM 100 FSAR (HI-2002444, Rev. 0) to Reflect Use of a Reduced Overpack Concrete Strength of 3000 psi". Whereas a concrete penetration depth of 5.67" was calculated in the HI-STORM FSAR for the cask sidewall based on concrete with a compressive strength of 4,000 psi, for 3,000 psi concrete a penetration depth of 7.56" was calculated (Reference 84). This is much less than the 26.75" thickness of the concrete sidewall and therefore acceptable since damage to the canister is precluded. A similar analysis was performed assuming that the 8" diameter missile goes directly into an inlet vent and impacts the pedestal shield. It was concluded that, as in the case of the 4,000 psi concrete, the concrete penetration distance for the 3,000 psi concrete is less than the radius of the pedestal which is acceptable. Holtec concluded (Reference 84) "The above calculations demonstrate that the HI-STORM 100 Overpack provides an effective containment barrier for the MPC after being subjected to a side missile strike. No missile strike compromises the integrity of the boundary. The effect of lower concrete strength in the side of the overpack is to increase the depth of damage to the concrete; however, there is no release of radioactivity since the MPC is not penetrated. The results from this analysis demonstrate that the reduction in concrete strength from 4000 psi to 3000 psi at PFSF has no structural consequence."

Based on the above, the HI-STORM storage system meets the general design criteria of 10 CFR 72.122(b), which states that SSCs classified as Important to Safety must be

designed to withstand the effects of tornadoes without impairing their capability to perform safety functions. Since tornado winds and tornado generated missiles do not have the capability to damage the canister, a tornado strike on or about loaded storage casks will not result in a release of radioactivity.

Canister Transfer Building

The Canister Transfer Building shields and protects the SSC's housed within it and the canister transfer activities, which take place inside, from the effects of severe natural phenomena. The Canister Transfer Building is designed to withstand the effects of the Region III design basis tornado wind and pressure drop forces, as well as the effects of Spectrum II tornado missiles as defined in Regulatory Guide 1.76 and Section 3 of NUREG-0800 (see Section 3.2.8).

The building provides this protection by means of thick reinforced concrete walls and roof of sufficient strength to withstand the design basis wind, pressure drop, and missile forces. Additional missile protection is provided by the interior reinforced concrete walls and missile / shielding doors and/or labyrinths.

8.2.2.3 Accident Dose Calculations

Extreme winds in combination with tornado-driven missiles are not capable of overturning a storage cask nor of damaging a canister within a storage cask. The Canister Transfer Building is designed to withstand wind forces and missiles associated with the Region III design basis tornado, protecting canister transfer operations from the effects of tornadoes. Therefore, no radioactivity would be released in the event of a tornado. Dose rates at the OCA boundary would not be affected by damage to storage casks from tornado-driven missile strikes.

The HI-STORM SAR does not discuss a repair procedure and the associated radiation dose from such a repair. Since the outer shell of the HI-STORM storage cask is constructed of 3/4 inch thick steel, a simple grout repair would not restore the cask to its original condition. In lieu of a repair-in-place procedure the HI-STORM storage cask would be examined to determine the extent of damage. If required, the canister would be transferred to another HI-STORM overpack and the damaged overpack repaired or permanently removed from service. The dose that could be expected during transfer of the canister from one storage cask to another would be similar to that presented in Table 7.4-1, Estimated Personnel Exposures For HI-STORM Canister Transfer Operations, 246.6 person-mrem.

8.2.3 Flood

Flood is classified as a natural phenomenon Design Event IV as defined in ANSI/ANS-57.9.

8.2.3.1 Cause of Accident

The probable maximum flood is considered to occur as a severe natural phenomenon.

8.2.3.2 Accident Analysis

The HI-STORM storage cask system is designed to withstand severe flooding, including full submergence. However, the PFSF site will remain dry in the event of a flood because of the site location and site design measures (Section 3.2.9). The upper surfaces of the storage pads and the floor of the Canister Transfer Building, and other PFSF buildings, are situated above the elevation of the Probable Maximum Flood from offsite sources. The site area is designed to assure adequate drainage for heavy rainfall, including the 100-year event. Therefore, a flood will not impact spent fuel storage or transfer operations.

8.2.3.3 Accident Dose Calculations

The Probable Maximum Flood will not have any affect on PFSF operations because of the location and design of the PFSF site. There will be no releases of radioactivity and no resultant doses.

8.2.4 Explosion

Explosion is classified as a human-induced Design Event IV as defined in ANSI/ANS-57.9.

8.2.4.1 Cause of Accident

Potential for Offsite Explosions

Text Withheld Under 10 CFR 2.390

Text Withheld Under 10 CFR 2.390

Potential for Onsite Explosions

Text Withheld Under 10 CFR 2.390

Text Withheld Under 10 CFR 2.390

Text Withheld Under 10 CFR 2.390

Text Withheld Under 10 CFR 2.390

8.2.4.2 Accident Analysis

Offsite Explosions

Text Withheld Under 10 CFR 2.390

Text Withheld Under 10 CFR 2.390

Text Withheld Under 10 CFR 2.390

[1] Since overpressure causes greater damage to structures at comparable distances than heat or blast fragments, overpressure governs the safe offset distance. Reg. Guide 1.91 at 1.

Text Withheld Under 10 CFR 2.390

[2] In the early 1960s, a rocket motor escaped from a test stand (but did not leave the test range) at the Bacchus Works in Magna, Utah, the facility where Hercules, Inc., the prior owner of Tekoi, had conducted tests before Tekoi was built. After that incident the safety features described above – the thrust block and restraining structural steel members – were installed at the test site to prevent such events from recurring.

Text Withheld Under 10 CFR 2.390

Onsite Explosions

Postulated Explosion Involving 20,000 Gallons Propane, Without Dispersion Modeling

Text Withheld Under 10 CFR 2.390

Text Withheld Under 10 CFR 2.390

Text Withheld Under 10 CFR 2.390

Text Withheld Under 10 CFR 2.390

Postulated Explosion Involving up to 20,000 Gallons Propane, Including Dispersion Modeling

Text Withheld Under 10 CFR 2.390

Text Withheld Under 10 CFR 2.390

Text Withheld Under 10 CFR 2.390

Text Withheld Under 10 CFR 2.390

Text Withheld Under 10 CFR 2.390

Text Withheld Under 10 CFR 2.390

Text Withheld Under 10 CFR 2.390

Text Withheld Under 10 CFR 2.390

Text Withheld Under 10 CFR 2.390

8.2.4.3 Accident Dose Calculations

Text Withheld Under 10 CFR 2.390

8.2.5 Fire

Fire is classified as a human-induced Design Event IV as defined in ANSI/ANS-57.9.

8.2.5.1 Cause of Accident

Text Withheld Under 10 CFR 2.390

Text Withheld Under 10 CFR 2.390

Wildfires

A report has been prepared for PFS to evaluate potential wildfires in Skull Valley (Reference 40). The report discusses the annual probability of wildfires, as well as range fire magnitudes, duration, propagation and heat generation. The first section of the report (pages 1 through 3) provides historical information on the number of occurrences and size of wildfires in Skull Valley. Figure 1 of the report shows the individual fires by size that occurred in Skull Valley between 1980 and 1997 while Figure 2 shows the fire occurrence by size class for the same time period. The report concludes the following regarding probability of occurrence and severity of wildfires in Skull Valley:

- Fires occur every year in Skull Valley
- The number of fires are very low on average at about 6 per year over the Skull Valley area
- The chance, on a percentage area basis, of a worst case fire even encountering the perimeter of the PFSF is well below 1% in a given year

- With the use of planning (fuel modification and fuel breaks) and current attack methods (aerial slurry drops), it is highly improbable that a fire would ever reach the site perimeter
- With a 100-ft fuel break, no heat damage could be caused to either equipment , structures, or any life form on the ground

The latter section of the report (pages 4 through 7) addresses fire magnitude, duration, propagation, and heat generation and concludes the following:

- Data available describes fuel loading at about 5,000 lb/acre
- With this fuel loading, flame lengths up to a maximum of 28-ft are possible for very short periods of time
- Maximum fire temperatures are reached near the soil surface and decrease rapidly above the top of the primary fuel (grass)
- Rate of spread is highly variable, but where heavy fuel is available can be as high as 590 ft/min for short runs
- Fire intensity is normal for this fuel type and fuel load
- Fires in this fuel type can be easily modified by reducing fuel load, i.e., planting a crested wheatgrass buffer around all areas where fire might present a problem
- With implementation of only minimal fuel modifications as mentioned above, wildfire will pose no hazard to the PFSF

The crushed rock surface of the RA and of the contiguous area out to the outer edge of the perimeter road provides a fire break of at least 200 ft to the concrete pads, where the storage casks are located, and a fire break of 162 ft to the Canister Transfer Building (reference SAR Figure 1.2-1). PFS will implement a maintenance program to control any significant growth of vegetation through the crushed rock surface of the Restricted Area, the isolation zone, the 10 ft. space between the isolation zone and the perimeter road, and the perimeter road. Thus, the surface of the Restricted Area from the concrete pads to the outside of the perimeter road will be non-combustible. In

addition, the spent fuel, equipment, and the PFSF personnel inside the RA will be protected from wildfires by a barrier of crested wheat grass that PFS will plant around the RA. The barrier will be 300 ft wide and will run outward from the outer edge of the perimeter road around the RA. A barrier of crested wheat grass would remain in place with little maintenance after it is planted. Crested wheat grass is fire resistant and thus would eliminate or greatly reduce the effect of any wildfire approaching the PFSF. Because of the distance that would separate a wildfire from the Canister Transfer Building and the casks containing spent fuel at the PFSF, a wildfire would pose no direct threat to the spent fuel casks or the SSCs important to safety in the Canister Transfer Building. The magnitude and duration of temperatures resulting from a wildfire at both the storage pads, and the storage casks located there, and at and within the Canister Transfer Building would be far less than those of the design basis fire, discussed below, for which the casks are designed to withstand (Reference 40).

Furthermore, a wildfire could not cause a fire or explosion on site that would threaten the spent fuel casks or SSCs important to safety. The location of the diesel fuel storage tank, at least 50 ft inside the inner fence around the RA, provides a 100 ft firebreak between the outer edge of the perimeter road and the tank, with the crested wheat grass barrier providing an additional 300 ft between a wildfire and the storage tank. At that distance a wildfire would not ignite or explode the diesel fuel in the tank. The diesel emergency generator tank will be a double-walled tank located inside the Security and Health Physics Building, which has reinforced concrete masonry construction, located 50 ft inside the crested wheat barrier, or 350 ft from a wildfire. A wildfire would not ignite or explode the fuel in the diesel emergency generator tank. All other diesel fuel sources (cask transporter, switch yard locomotive, heavy haul tractor-trailer, and mainline locomotives) would be farther than 100 ft inside the edge of the crested wheat grass barrier, and would similarly not be threatened by a wildfire due to

their distance from a fire, even if it were assumed the wildfire somehow penetrated this grass barrier.

The relatively large capacity group of propane storage tanks that will supply propane to heat the Canister Transfer Building and the Security and Health Physics Building (described in Section 8.2.4.1) shall be located a minimum distance of 1,800 ft south or southwest of the Canister Transfer Building, and shall be located a minimum distance of 1,800 ft from the cask storage area. The relatively small propane storage tanks that will supply the O&M and Administration buildings will be located in the vicinity of these buildings, and shall also be located a minimum distance of 1,800 ft from the Canister Transfer Building and the cask storage area. Due to the large distances from these propane tanks to the Canister Transfer Building and cask storage area, were a wildfire to somehow ignite the propane associated with these tanks, the resultant fire would not pose a threat to important to safety structures, systems, or components. The effects of an explosion involving propane assumed to have leaked from the group of propane storage tanks that will supply the Canister Transfer Building and the Security and Health Physics Building are evaluated in Section 8.2.4.2, where it is determined that such an explosion will not cause significant damage to the Canister Transfer Building or to the nearest storage casks. Therefore, if wildfires could affect the onsite propane storage tanks, damage to these tanks would not pose a threat to important to safety structures, systems, or components. However, to prevent wildfires from damaging propane storage tanks and possibly causing a propane-fueled fire or explosion, PFS will install a crushed rock surface, that will be devoid of vegetation that could propagate a wildfire, which will extend a minimum of 100 ft radially outward from the propane tanks. This will assure that there is a minimum of 100 ft crushed rock fuel break around the propane storage tanks. In accordance with Reference 40, a 100 ft fuel break provides adequate protection from wildfires and no heat damage would be caused to either equipment, structures, or any life form on the ground.

A wildfire in the vicinity of the PFSF would not cause the evacuation of PFSF security personnel. By virtue of the 300 ft crested wheat grass barrier surrounding the PFSF RA and the distance between the outer edge of the perimeter road around the RA, the heat from a wildfire would not pose a threat to any personnel inside the RA. PFSF security personnel will have appropriate emergency breathing apparatus available such that the smoke from a wildfire near the PFSF will not force them to evacuate.

Combustion Sources Inside the Restricted Area

Text Withheld Under 10 CFR 2.390

Text Withheld Under 10 CFR 2.390

Text Withheld Under 10 CFR 2.390

8.2.5.2 Accident Analysis

Storage System

Text Withheld Under 10 CFR 2.390

Text Withheld Under 10 CFR 2.390

Text Withheld Under 10 CFR 2.390

Text Withheld Under 10 CFR 2.390

Text Withheld Under 10 CFR 2.390

Text Withheld Under 10 CFR 2.390

Canister Transfer Building

Text Withheld Under 10 CFR 2.390

Text Withheld Under 10 CFR 2.390

THIS PAGE INTENTIONALLY LEFT BLANK

Text Withheld Under 10 CFR 2.390

Text Withheld Under 10 CFR 2.390

Text Withheld Under 10 CFR 2.390

Canister Transfer Building Assessment

Text Withheld Under 10 CFR 2.390

Text Withheld Under 10 CFR 2.390

Text Withheld Under 10 CFR 2.390

Text Withheld Under 10 CFR 2.390

Text Withheld Under 10 CFR 2.390

Text Withheld Under 10 CFR 2.390

Shipping Cask Assessment

Text Withheld Under 10 CFR 2.390

Text Withheld Under 10 CFR 2.390

Fire in a Canister Transfer Cell Involving the Cask Transporter

Text Withheld Under 10 CFR 2.390

Text Withheld Under 10 CFR 2.390

8.2.5.3 Accident Dose Calculations

Text Withheld Under 10 CFR 2.390

THIS PAGE INTENTIONALLY LEFT BLANK

8.2.6 Hypothetical Storage Cask Drop / TipOver

The hypothetical drop / tipover of a storage cask is classified as Design Event IV as defined by ANSI/ANS-57.9. As discussed below, storage cask tipover events, and vertical end drop events from heights greater than 9 inches, are not credible.

8.2.6.1 Cause of Accident

The stability of the loaded storage casks in the upright position on the PFSF concrete storage pad is demonstrated in Chapter 4 of this SAR. The effects of earthquakes, tornado wind, and missiles are described in the HI-STORM SAR, where it is shown that the loaded storage cask will not tip over under the severe design basis natural phenomena specified in Chapter 3 of this SAR. Seismic analyses by Holtec confirm the cask will not tip over in the event of the site-specific DE (Section 8.2.1).

The storage casks are moved from the Canister Transfer Building to the storage pad using the cask transporter. The bottom of a storage cask is only raised approximately 4 inches above the ground during movement of a loaded storage cask. The cask transporter is designed to mechanically prevent a storage cask lift of more than 9 inches above the ground. As discussed in the following paragraphs, storage cask end drops of up to 9 inches would not result in canister breach, and the storage cask would retain its structural integrity and continue to provide shielding and natural convection cooling for the canister.

Storage cask tipover accidents, and storage cask vertical end drop accidents from heights greater than 9 inches, are hypothetical events, since there are no credible causes. A storage cask tipover, and a storage cask vertical end drop from 9 inches, are analyzed in order to assess potential consequences of such accidents.

8.2.6.2 Accident Analysis

Analyses of the hypothetical storage cask drop and/or tipover are documented in the HI-STORM SAR. Holtec analyzes tipover and vertical end drop accidents separately in HI-STORM SAR Chapter 3, and Appendices 3A and 3B. The finite element model and code algorithm were reviewed by the NRC staff during the review of the SAR.

Holtec established design basis vertical and horizontal acceleration values for the HI-STORM storage cask system of 45 g for the stored fuel. It is demonstrated in the HI-STORM SAR that deceleration levels at the top of the stored fuel from hypothetical cask tipover and 11 inch vertical end drop accidents are within the design basis, based on impact with a reference ISFSI pad 36 inches thick, constructed of 4200 psi concrete with reinforcing steel having a 60 ksi yield strength and grounded on a soil foundation with an effective Young's Modulus not exceeding 28,000 psi. The pad thickness at PFSF is 36 inches, which meets the reference pad thickness criteria. The PFSF pad concrete compressive strength shall not exceed 4,200 psi, and the pad reinforcing bar is 60 ksi yield strength ASTM material. The soil foundation beginning 2 foot below the ISFSI pad concrete has an effective soil Young's Modulus not exceeding 28,000 psi. However, the first 2 feet (maximum) of foundation directly below the ISFSI pad concrete is a soil-cement mixture with an effective Young's Modulus of 75,000 psi (maximum). To ensure that the 45 g limit at the top of the fuel is met, PFSF site-specific tipover and vertical drop events have been analyzed by Holtec (Reference 83) using the same methodology and computer codes used in the analyses discussed in the HI-STORM SAR.

Based on a conservative modeling of the site-specific properties of the PFSF pad and underlying foundation, Holtec calculated that the maximum cask deceleration level, in the event of a vertical drop from 10 inches, is 45.15 g. Reducing the drop height to 6.5 inches, Holtec calculated a maximum deceleration of 36.15 g's. Interpolating between the decelerations associated with these drop heights, it is determined that the deceleration

resulting from a 9 inch drop would be less than 45 g's. Since the design of the transporter limits the maximum height of the load to 9 inches, credible drops at the PFSF ISFSI pad will not result in deceleration levels that exceed the HI-STORM design basis.

Holtec also performed a PFSF site-specific tipover analysis using the analysis model from the HI-STORM SAR with appropriate modifications to reflect the maximum allowable stiffness of the soil-cement and to conservatively model the stiffness of the underlying native soils existing at the PFSF (Reference 83). The analysis of the overpack steel structure incorporated elastic-plastic material behavior to permit energy absorption at the impact interface locations where local large deformations occur. The concrete for both the ISFSI pad and in the HI-STORM overpack was modeled using the same formulation used in the HI-STORM SAR tipover analysis, and the MPC model was identical to that used in the HI-STORM SAR analysis. The results from the site-specific non-mechanistic tipover analysis demonstrated that the maximum deceleration at the top of the active fuel region is 43.82 g's, which is below the HI-STORM design basis value of 45 g's. Therefore, the HI-STORM 100 system deployed at PFSF meets the design basis requirements in the HI-STORM SAR for vertical end drop and non-mechanistic tipover.

In the PFSF site-specific analyses of storage cask tipover and drop events discussed above, Holtec assumed that the nominal 28 day compressive strength of the HI-STORM overpack concrete is 3,000 psi. This is lower than the 4,000 psi minimum concrete strength specified in the HI-STORM FSAR (Table 1.D.1), and also lower than the 4,200 psi cask concrete compressive strength assumed in the tipover and drop analyses documented in the HI-STORM FSAR. Two additional HI-STORM storage cask concrete compressive strengths were evaluated in the tipover simulations in Reference 83: 3,600 psi and 4,200 psi. For the hypothetical storage cask tipover event, the analyses determined maximum decelerations at the top of the active fuel region of

45.0g for the case with 3,600 psi cask concrete, and 45.9g for the case with 4,200 psi cask concrete. Holtec performed an evaluation of the effects of using 3,000 psi concrete in a HI-STORM storage cask (Reference 84) and determined that the only numerically significant use of concrete strength appears in the evaluation of the overpack resistance to the 8 inch diameter penetrant tornado missile. In Reference 84, Holtec states that the cask shielding effectiveness and thermal conductivity of concrete will not be affected by use of a reduced strength concrete, since the density of the concrete is inconsequentially affected by variations in the concrete strength (which is primarily a function of the water-cement ratio). Appendix 3.G in the HI-STORM FSAR details the tornado missile evaluation. Holtec performed a calculation for the 8 inch diameter penetrant tornado missile impacting the side of a HI-STORM storage cask assumed to have concrete with a 3,000 psi compressive strength, using the same methodology as HI-STORM FSAR Appendix 3.G. The calculation determined that a reduction in the compressive strength of the concrete will lead to a slightly larger depth of penetration than that identified in the HI-STORM FSAR. However, Holtec's calculation (Reference 84) demonstrated that the HI-STORM storage cask with 3,000 psi concrete provides an effective containment barrier for the canister after being subjected to a side missile strike, since the side concrete will not be penetrated by the missile and there will be no damage to the canister.

In addition to the storage pad drop discussed above, Holtec analyzed a vertical end drop of a HI-STORM storage cask onto the Canister Transfer Building foundation mat (Reference 83). The mat is 5 ft thick reinforced concrete, except at the perimeter of the mat, where the 1.5 ft deep shear keys result in a total concrete thickness over the shear keys of 6.5 ft. The analysis conservatively assumed a uniform concrete thickness of 6.5 ft, with a mat concrete compressive strength of 4,200 psi. The compressive strength of the cask concrete was conservatively assumed to be 3,600 psi, consistent with the drop/tipover analysis onto a storage pad and greater than the minimum value of 3,000 psi used in that analysis. The model of the soil underlying the foundation mat was similar to that in the pad emplacement area, conservatively reflecting the stiffness

of the native soils existing at the PFSF, except that there is no soil cement under the Canister Transfer Building. The analysis considered a single storage cask drop height, from 2 inches, and determined a maximum deceleration experienced by the fuel of 20.4 g (Reference 83). This deceleration is well below the design basis limit of 45 g and is therefore acceptable.

For the canister, the design basis maximum acceleration of 45 g established for the side and end drops is less than the 60 g acceleration analyzed and determined to be acceptable in the HI-STAR Transport SAR (Reference 20). Since the accelerations are bounding, the stresses (produced by 60 g vertical and horizontal accelerations) analyzed in the HI-STAR stress analyses and determined to be acceptable also bound stresses that would result from the HI-STORM tipover and end drop accidents. The canister would retain its integrity and the canister and canister internals would continue to perform their safety functions (i.e. confinement; $k_{eff} < 0.95$; transfer of decay heat from the spent fuel assemblies to the canister shell; and shielding, especially in the top axial direction). For the storage cask, the HI-STORM SAR evaluates the buckling capacity of the cask based on a 45 g acceleration. No credit was taken for the structural stiffness of the radial concrete shielding. The minimum factor of safety for material allowable stresses for all portions of the cask structure is 1.10. The tip over event evaluated in the HI-STORM SAR specifies that the cask lid must remain in-place after a hypothetical tipover event. Chapter 3 of the HI-STORM SAR demonstrates that the minimum factor of safety for the cask lid and lid bolts is 1.29. It is considered that the tipover accident could cause some localized damage to the radial concrete shield and outer steel shell where the storage cask impacts the surface.

Studies of the capability of spent fuel rods to resist impact loads indicate that the most vulnerable fuel can withstand 63g's in the side impact orientation (Reference 21). Therefore, limiting the maximum lateral deceleration of the HI-STORM system to 45g's ensures that the fuel rod cladding integrity is maintained for side impacts such as would occur during a hypothetical storage cask tipover event.

Reference 21 also indicates that fuel rods can withstand 82g's axial loading without buckling; however, the analysis neglected the weight of fuel pellets (which could possibly be fused or locked to the cladding) and only the weight of the cladding was considered. In Interim Staff Guidance-12 (ISG-12, Reference 43), the NRC staff indicated that fuel rod buckling analyses should include the weight of the fuel pellets and consider material properties of irradiated cladding. Holtec performed such an analysis consistent with the staff recommendations, which is documented in Section 3.5 of the HI-STORM SAR. This analysis identified the most limiting fuel assembly with respect to buckling (Westinghouse 14X14 Vantage), and determined the minimum deceleration loading at which buckling of this limiting assembly could occur, using material properties of irradiated Zircalloy. Holtec's analysis takes credit for confinement of fuel assemblies by the HI-STORM canister basket assembly, which provides continuous support to limit lateral movement of fuel rods along their entire length. Lateral movement of fuel rods in a fuel assembly is limited to: 1) the clearance gap between the grid straps and the fuel basket cell wall, at the grid strap locations; and 2) in the region between grid straps, the maximum available gap between the fuel basket cell wall and the fuel rod. For the most restrictive case analyzed, Holtec determined the limiting axial deceleration to be 64.8g. At this limiting deceleration loading, fuel rod cladding of fuel assemblies in the HI-STORM basket will not exceed yield stresses. Since the limiting axial deceleration for the fuel rods is greater than the design axial deceleration of the HI-STORM system, the fuel rod cladding will retain its integrity for the 9 inch vertical end drop. Designing the HI-STORM system, and limiting the maximum credible vertical end drop height such that the maximum deceleration experienced by the system is 45g's or less, ensures that fuel rod cladding integrity is maintained during all normal, off-normal, and accident conditions.

Cask Transporter Carrying a Storage Cask Loaded with Spent Fuel

In addition to the cask analyses, the following evaluation is provided to quantify the effects of natural forces on the transporter loaded with a cask full of spent fuel assemblies to show that a loaded transporter will not tip or overturn.

Information was reviewed from two track type cask transporters that have recently been supplied for similar casks to establish a basis for the cask transporter stability analysis, since the actual transporter to be used at the PFSF has not been determined. The transporters are manufactured by J&R Engineering and Lift Systems (References 72 and 73). The following information was collected:

Attribute	J&R Engineering 160 ton unit	Lift Systems 180 ton unit
Width of transporter	228 in.	228 in.
Length of transporter	336 in.	297 in.
Height of transporter (w/ cask)	264 in.	271 in.
Center of Gravity Height	55 in.	66 in.
Weight of transporter (w/o cask)	185,000 lbs.	160,000 lbs.

The transporter by Lift Systems will be used to evaluate the transporter stability since it has the same width, highest center of gravity, highest height, and lowest weight.

The following information regarding the storage casks was obtained from the HI-STORM SAR (Reference 2) and References 79 and 80 for the representative storage cask:

Attribute	HI-STORM	Representative Storage Cask
Height of storage cask	231 in.	223 in.
Diameter of storage cask	133 in.	136 in.
Center of Gravity Height	123 in.	114 in.
Weight of loaded storage cask	355,575 lbs.	307,600 lbs.

The representative storage cask will be used in the transporter stability analysis since it has considerable less weight to resist overturning and approximately the same height and diameter.

a. Stability of a Loaded Cask Transporter with Tornado Missile Impact

The tornado-generated missile loading specified in Table 3.6-1 used for this analysis is a 3990 lb. automobile traveling at a horizontal velocity of 134 ft/sec. This missile will

produce the highest momentum for tipping the loaded cask transporter. The tornado missile is assumed to strike the transporter in the worse case direction, which is against the side where the transporter has the least width i.e., resistance to tipover. In addition, the automobile is placed at the top of the transporter for maximum tipping potential and it is assumed the transporter will not slide. The transporter loading conditions are shown on Figure 8.2-1. It is also assumed that the transporter components will retain structural integrity during missile impact. In the event a component, such as the lift beam, fails, the cask will simply drop approximately 4" to the ground. The HI-STORM storage cask is determined to be structurally sound for drops up to 9 inches, as shown in Section 8.2.6.

The event can be thought of as two separate events. The first event is the collision, during which some of the kinetic energy of the missile is transferred to the cask/transporter system (target). How much of the energy is imparted to the target depends upon the nature of the collision. Not all of the missile energy can be transferred to the target, since this would violate the law of conservation of momentum. The energy not transferred to the target remains as kinetic energy of the rebounding missile.

The most conservative collision would be a perfectly elastic collision, where no energy is lost and both momentum and kinetic energy are conserved during impact. The angular momentum and kinetic energy of the missile before and after the impact is:

Before impact: Angular momentum of the missile = $m_m V_o H$
Kinetic energy of the missile = $0.5\ m_m V_o^2$

After impact: Angular momentum of the missile = $m_m V_f H$
Kinetic energy of the missile = $0.5\ m_m V_f^2$

where:

m_m = mass of missile = 3990 lbs / 386 in/sec^2 = 10.34 lb-sec^2 / in.
V_o = initial velocity of missile = 134 fps = 1608 in./sec
H = height of transporter = 271 inches

V_f = velocity of missile after impact

After impact the angular momentum of the transporter = $I_p\omega_p$

where:

I_p = mass moment of inertia of loaded transporter about pivot point P
ω_p = angular velocity of the transporter after impact

The mass moment of inertia of the cask about pivot point P is:

$$I_{p\ cask} = m_{cask}/12(3r_{cask}^2 + h_{cask}^2) + m_{cask}\, d_{cg\ cask}^2$$

where:

m_{cask} = mass of cask = 307,600 lbs / 386 in/sec^2 = 797 lb-sec^2 / in.
r_{cask} = radius of cask = 136 in./2 = 68 in.
h_{cask} = height of cask = 223 in.
$d_{cg\ cask}$ = distance from cask center of gravity to pivot point P calculated from the cask center of gravity height raised 4" (118") and the horizontal distance from the center of gravity to pivot point P (taken as half the transporter width, 228 in. /2 = 114) or $d_{cg\ cask} = [(118)^2 + (114)^2]^{1/2} = 164$ in.

Therefore, the cask mass moment of inertia about pivot point P is:

$$I_{p\ cask} = 797/12\ [3(68)^2 + (223)^2] + (797)(164)^2 = 25.66 \times 10^6\ \text{in·lb·sec}^2$$

The mass moment of inertia of the transporter about pivot point P is (assume the transporter is a rectangular parallelepiped that represents the lower "track" portion of the transporter where most of the weight is located):

$$I_{p\ xptr} = m_{xptr}/12\ (h_{xptr}^2 + w_{xptr}^2) + m_{xptr}\, d_{cg\ xptr}^2$$

where:

m_{xptr} = mass of transporter = 160,000 lbs / 386 in/sec^2 = 415 lb-sec^2/in.
h_{xptr} = height of transporter for calculating center of gravity (assume twice the height of the center of gravity) = 66 in. x 2 = 132 in.
w_{xptr} = overall width of transporter = 228 in.
$d_{cg\ xptr}$ = distance from transporter center of gravity to pivot point P calculated from the transporter center of gravity height (66") and the horizontal distance from the center of gravity to pivot point P

(taken as half the transporter width, 228 in./2 = 114") or
$d_{cg\ xptr} = [(66)^2 + (114)^2]^{1/2} = 132$ in.

Therefore, the transporter mass moment of inertia about pivot point P is:

$$I_{p\ xptr} = 415/12\ (132^2 + 228^2) + (415)(132)^2 = 9.63 \times 10^6\ \text{in·lb·sec}^2$$

The total mass moment of inertia of the loaded transporter about pivot point P then is:

$$\text{Total } I_p = 25.66 \times 10^6 + 9.63 \times 10^6 = 35.29 \times 10^6\ \text{in·lb·sec}^2$$

The kinetic energy of the cask after impact = $0.5\ I_p\ \omega_p^2$

Equating the angular momentum of the missile before impact to the total angular momentum after impact,

$$m_m V_o H = m_m V_f H + I_p \omega_p$$

Equating the kinetic energy before impact to the total kinetic energy after impact,

$$0.5\ m_m V_o^2 = 0.5\ m_m V_f^2 + 0.5\ I_p\ \omega_p^2$$

Substituting the values of m_m, V_o, H and I_p, and solving for V_f and ω_p,

V_f = -1540 in/sec (missile rebound velocity)

ω_p = <u>0.250 rad/sec</u>

The second part of the event consists of motion of the target after impact. Immediately after impact, the target is in it's original position and starts to rotate about the pivot point P with an angular velocity of 0.250 rad/sec. The weight of the cask/transporter creates a moment (torque) about the pivot point, which opposes the motion and decelerates the target. This moment reduces the angular velocity until it reaches zero, and then gravity

returns the target to its original position. The distance the center of gravity moves upward before stopping can be calculated by equating the rotational kinetic energy of the target to the work required to raise the center of gravity.

The rotational kinetic energy of the target after impact can be determined and as the loaded transporter tips about point P, the kinetic energy is transferred to potential energy as the center of gravity rises a distance y:

$$E_{tipping} = \text{Kinetic Energy} = \text{Increase in Potential Energy}$$
$$= 0.5\, I_p\, \omega_p^2 = W_t\, y$$
$$= 0.5(35.29\text{x}10^6)(0.250)^2 = 467{,}600\, y$$
$$y = \underline{2.36 \text{ in.}}$$

In conclusion, 1) The loaded transporter will not tip over because the center of gravity only lifts 2.36", which is considerably less than 51.6", the distance required for the center of gravity to pass over the pivot point P and 2) The Technical Specification lift height won't be exceeded since raising the cask an additional 2.36" above the carrying height of 4" = 6.36", which is less than the 9" allowable lift height.

b. Stability of a Loaded Cask Transporter Under Seismic Conditions

The transporter is not designated an important to safety component and therefore is not subject to specific seismic design requirements. The loaded transporter is generally a flexible system with low frequencies, which would probably not be excited due to the short duration of a seismic event. In the event a seismic load could cause a failure of the transporter structure, the cask would drop or lower to the ground as vehicle members fail or yield. In the event that the cask were to drop, the HI-STORM storage cask is determined to be structurally sound for drops up to 9 inches, as shown in Section 8.2.6.2.

The cask transporter shall be designed to ensure that its dimensions, center of gravity, and weight when carrying a loaded storage cask are such that the loaded transporter

will not tip over, nor will the storage cask temporarily rise above its analyzed drop height of 9 inches in the event of: 1) the PFSF design basis ground motions, and 2) a design basis tornado-driven missile postulated to strike the cask transporter or storage cask being carried by the cask transporter.

8.2.6.3 Accident Dose Calculations

Based on the results of the analyses described above, the cask/canister storage systems would retain their confinement integrity and there would be no release of radioactivity and no resultant doses in the event of hypothetical drop/tipover of a fully loaded storage cask. For tipover of a HI-STORM storage cask, it is considered that localized damage to the radial concrete shield and outer steel shell where the cask impacts the pad could result in an increased surface dose rate due to the damage. However, this would not produce a noticeable increase in the dose rates at the RA fence or OCA boundary because the affected area would likely be small (HI-STORM SAR, Section 11.2.3).

In the hypothetical event of a storage cask tipover / drop accident that is postulated to result in damage to a storage cask, the PFSF staff would evaluate the extent of damage and if needed would remove a canister from the damaged storage cask and transfer the canister to a new storage cask in the Canister Transfer Building utilizing a transfer cask to provide canister shielding and a single-failure-proof crane.

THIS PAGE INTENTIONALLY LEFT BLANK

8.2.7 Canister Leakage Under Hypothetical Accident Conditions

The leakage of a canister under hypothetical accident conditions wherein cladding of 100% of the fuel rods is postulated to have ruptured is classified as Design Event IV as defined by ANSI/ANS-57.9. This is not a credible accident at the PFSF.

8.2.7.1 Cause of Accident

The HI-STORM and representative storage system canisters are totally sealed, integrally welded pressure vessels, designed to Section III of the ASME BPVC. There are no gaskets, mechanical seals, or packing that could provide a potential leakage path for the radioactive fission products contained within the fuel cladding. The canisters are provided with multiple closures to confine the radioactive fuel. Following welding of the closures, the canisters are tested to verify their leaktight integrity. No components are required to penetrate the sealed canisters after helium backfilling is completed and the outer closure is welded in place. The postulated failure of the cladding of all fuel rods in a canister and release of gases normally contained in the fuel rod cladding under pressure would not challenge the integrity of the canisters (Section 8.2.10). Maximum canister leakage under conditions wherein cladding of 100% of the fuel rods is postulated to have ruptured is considered to be a non-credible event, which will not occur over the life of the PFSF. Nevertheless, this accident is hypothesized and analyzed below. Doses resulting from the canister leakage under hypothetical accident conditions were calculated in accordance with Interim Staff Guidance-5 (ISG-5, Reference 31).

8.2.7.2 Accident Analysis

In this accident analysis, it is postulated that a canister leaks at the maximum rate permitted by the closure helium leakage test acceptance criteria. Such a leak would require a significant defect in each of two redundant closure welds. In this hypothetical

accident condition, it is assumed that cladding of 100% of the fuel rods stored in the canister has ruptured. Failure of the cladding of all the rods in a canister is not a credible scenario for the reasons discussed in Section 8.2.10. The spent fuel is stored in a manner that complies with the general design criteria 10 CFR 72.122(h), in that the spent fuel cladding is protected during storage against degradation that could lead to gross ruptures. The space internal to the confinement boundary is filled with an inert gas (helium) without the presence of air or moisture that might produce the potential for long term degradation of the spent fuel cladding. The spent fuel storage systems are designed to assure that fuel is maintained at temperatures below those at which fuel cladding degradation occurs, under normal, off-normal, and accident conditions. It is therefore highly unlikely that a spent fuel assembly with intact fuel cladding will undergo cladding failure during storage, and the assumption of complete cladding failure of all rods in a canister is extremely conservative.

This postulated cladding rupture results in the escape of rod fill gas and fission product gases from the rods to the canister innerspace, with consequent pressure increase of the canister innerspace. In addition, it is conservatively assumed that the canister is at its maximum storage temperature, thus maximizing the canister internal pressure and the flow rate of gas through the leak path to the atmosphere.

For the HI-STORM canister, the hypothetical accident conditions of temperature and pressure result in the canister leak rate increasing from Holtec's test condition leak rate of 7.5 E-6 scc/sec (5.0 E-6 scc/sec leakage test acceptance criteria plus 2.5 E-6 scc/sec minimum sensitivity) to a calculated leak rate of 1.25 E-5 scc/sec. The results of this leak rate calculation, performed using the equations provided in ANSI N14.5-1977 (Reference 32), are included in the HI-STORM Storage SAR (Reference 2). A leak rate of 1.0 E-4 cc/sec was used for the representative storage system canister under hypothetical accident conditions (Reference 46).

Both storage system analyses used the SAS2H and ORIGEN-S modules of the SCALE4.3 system to generate the gaseous, volatile, and fuel fine radionuclide inventories associated with PWR and BWR spent fuel assumed to have conservative burnup, cooling time and enrichment. Nuclides that contribute greater than 0.1% of the total curie inventory for a fuel assembly, as well as iodine, were considered. The Co-60 crud inventory was determined using the 140 $\mu Ci/cm^2$ crud surface activity for PWR rods and the 1254 $\mu Ci/cm^2$ crud surface activity for BWR rods guidance provided in NUREG/CR-6487 (Reference 34). These surface concentrations were multiplied by the surface area per assembly (3 E5 cm^2 and 1 E5 cm^2 for PWR and BWR rods respectively), also provided in NUREG/CR-6487. The Co-60 source terms were then decay-corrected to account for the cooling time, using the half life of Co-60. It was determined that maximum dose rates are associated with postulated leakage of a representative storage system canister containing 61 design basis BWR fuel assemblies. While the HI-STORM MPC-68 canister contains seven more BWR fuel assemblies and a slightly more conservative burnup/cooling time combination (Holtec used 40 GWd/MTU burnup and 5 years cooling time compared to 40 GWd/MTU burnup and 6 years cooling time assumed for the representative storage system BWR canister), the calculated leak rate for the HI-STORM MPC-68 under bounding accident conditions of temperature and pressure (1.25 E-5 cc/sec) is substantially less than the 1.0E-4 cc/sec used for the representative storage system canister.

The radionuclide inventory for the representative storage system BWR canister was based on 61 design basis BWR fuel assemblies (GE 8X8) with a burnup of 40,000 MWd/MTU, 6 years cooling time, and 2.95% enrichment. This is conservative, since fuel with these characteristics is too "hot" for shipment to the PFSF. This ensures that the inventory used in the calculation exceeds that of fuel authorized for storage at the PFSF.

The radionuclide release fractions are based on Table 4-1 of NUREG-1617 (Reference 35) for hypothetical accident conditions, in accordance with ISG-5, and are as follows:

Nuclides	Release Fractions
Gases (Includes H-3, Kr-85, I-129)	0.30
Crud (Includes Co-60)	1.0
Volatiles (Includes Sr-90, Ru-106, Cs-134, Cs-137)	2.0 E-4
Fuel Fines (Includes Y-90, Sb-125, Te-125m, Ce-144, Pr-144, Pm-147, Eu-154, Eu-155, Pu-238, Pu-239, Pu-240, Pu-241, Am-241, Cm-244)	3.0 E-5

The activity inventory of each radionuclide released from the fuel into the canister was calculated by multiplying the total activity of the radionuclide associated with 61 BWR fuel assemblies times the above release fraction. For conservatism no credit was taken for holdup of particulates and volatiles released from the fuel inside the canister.[1] Therefore, 100 percent of these radionuclides and 100 percent of the H-3, Kr-85 and I-129 are assumed to be available for release from the canister. The release rate for each radionuclide was calculated by taking the representative storage system canister gaseous leak rate under the hypothetical accident conditions (1.0E-4 cc/sec) divided by the minimum free volume of a representative storage system canister loaded with BWR fuel assemblies (accounting for the fuel rod plenum volumes), multiplied by the activity of each radionuclide available for release.

[1] Based on Table XIX of Reference 25, 90 percent of particulate and volatile fission products would be subject to plateout or deposition within the leaking canister following release from the fuel rods, and would not be available for release to the atmosphere. However, for conservatism no credit has been taken for holdup of particulates and volatiles released from the fuel inside the canister.

8.2.7.3 Accident Dose Calculations

Doses resulting from the postulated leaking representative storage system canister were calculated in Reference 46. Doses resulting from the postulated leaking HI-STORM canister were calculated in Reference 74. The nearest distance from a PFSF storage pad to the OCA fence (site area boundary) is 646 meters, and the nearest distance from the Canister Transfer Building to the OCA fence is 500 meters. A χ/Q of 1.94 E-3 sec/cubic meter was calculated in Reference 75 in accordance with Regulatory Guide 1.145 (Reference 6), assuming a distance of 500 meters from the release source to the dose receptor, a wind speed of 1 meter/sec, and atmospheric stability class F, with no consideration for plume meander. For the HI-STORM canister leakage calculation, a χ/Q of 4.85 E-4 sec/m^3 was calculated in Reference 75 in accordance with Regulatory Guide 1.145 (Reference 6), assuming a distance of 500 meters from the release source to the dose receptor, a wind speed of 1 meter/sec, and atmospheric stability class F, with consideration for plume meander, following the methodology in the HI-STORM SAR (Reference 2).

The dose conversion factors for internal doses due to inhalation, the Committed Effective Dose Equivalent (CEDE) and Committed Dose Equivalent (CDE) to organs, were obtained from the EPA Federal Guidance Report No. 11 (Reference 7). An adult breathing rate of 3.3 E-4 cubic meters per second was assumed (Reference 7). For conservatism no credit was taken for a respirable fraction, and internal doses were calculated assuming that 100% of radionuclides released from the leaking canister are of respirable size.[2] In addition to internal doses, doses due to external radiation from submersion in the plume (deep dose equivalent) were also evaluated in References 46 and 74 for the representative storage system and HI-STORM canisters, respectively. Dose conversion factors for submersion were obtained from EPA Federal Guidance Report No. 12 (Reference 30). In accordance with ISG-5, a canister leakage duration

[2] Based on Table XX of Reference 25, 95 percent of particulates released from inside the fuel rod due to cladding breach are greater than 10 microns aerodynamic diameter and are non-respirable. However, for conservatism no such credit has been taken and the respirable fraction is assumed to be 1.

of 30 days was assumed for this hypothetical accident condition. Dose calculations were conservatively based on the assumption that an individual is continuously present at the location nearest the canister transfer building on the OCA boundary for the 30 day leakage duration, and the wind constantly blows in this direction for 30 days.

The representative storage system canister leakage calculation (Reference 46) determined a CEDE of 75.7 mrem due to inhalation and an external dose due to submersion in the plume of 0.155 mrem, for a Total Effective Dose Equivalent (TEDE) of 75.7 + 0.155 = 75.9 mrem.[3] The HI-STORM canister leakage calculation (Reference 74) determined a CEDE of 2.67 mrem due to inhalation and an external dose due to submersion in the plume of 5.5 E-3 mrem, for a TEDE of 2.68 mrem. For the representative storage system canister, the maximum organ dose is the CDE to the bone surface plus the submersion dose, calculated to be 824 + 0.155 = 824 mrem. For the HI-STORM canister, the maximum organ dose is also to the bone surface, with a value of 28.4 (CDE) + 7.82 E-3 (submersion) = 28.4 mrem. The skin dose for the representative storage system canister was calculated to be 0.28 mrem, which serves as a reasonable approximation of the dose to the lens of the eye. Reference 74 calculated a skin dose of 6.42 E-3 mrem, and a lens dose of 2.39 E-5 mrem for the case of the leaking HI-STORM canister.

[3] Although no such credit has been taken, if credit were taken for a 10% canister release fraction of volatiles and particulates from the representative storage system canister (with 90% of volatiles and particulates released from the fuel rods assumed to be held up in the canister by plateout/deposition and unavailable for release), based on Table XIX of Reference 25, and if credit were also taken for the 5% respirable fraction of particulate fission products released from inside the fuel rods of the representative storage system canister in accordance with Table XX of Reference 25, then the TEDE would be 2.70 mrem to the individual at the owner controlled area fence. The CDE to the maximally exposed organ, the lungs in this case, would be 14.7 mrem.

10 CFR 72.106(b) requires that any individual located on or beyond the nearest boundary of the controlled area may not receive from any design basis accident the more limiting of a total effective dose equivalent of 5 rem, or the sum of the deep-dose equivalent and the committed dose equivalent to any individual organ or tissue (other than the lens of the eye) of 50 rem. The lens dose equivalent shall not exceed 15 rem and the shallow dose equivalent to skin or to any extremity shall not exceed 50 rem. Based on the above TEDE and organ doses, the leaking canister accidents, involving maximum leakage of a representative storage system canister containing failed BWR fuel, and maximum leakage of a HI-STORM canister containing failed BWR fuel, do not exceed the limits specified in 10 CFR 72.106(b). Note that although the consequences have been evaluated, this is not considered to be a credible event for the PFSF.

As an evaluation of the potential doses from environmental pathways following deposition of material in the plume, a pathway analysis for the leaking representative storage system canister (worst case) using the RESRAD computer code (Reference 36) was next conducted (Reference 47). The first step of this evaluation was to estimate the amount of material deposited on the ground from the plume. This estimate was made assuming that the effluent concentration in a given sector is uniform across the sector at a given distance, as described in Regulatory Guide 1.111 (Reference 37).

Using a straight-line trajectory model, this approach requires that the relative deposition rate should be divided by the arc length of the sector at the given downwind distance being considered to estimate deposition. The value of relative deposition (m^{-1}) was obtained from Figure 6 of Regulatory Guide 1.111, with the resulting value of 8.0E-5 m^{-1} at 500 meters downwind. Deposition estimates were made for each of the radionuclides in the source term. These values, in units of pCi/m^2, were next modified to units of pCi/g to match the input requirements of the RESRAD code, by assuming a soil density of 1.5 E+6 g/m^3 and uniform contamination of the soil to a depth of 1 cm.

The exposure scenario considered in the RESRAD analysis includes direct exposure to contaminated ground, inhalation of resuspended radioactive material, ingestion of milk and beef following grazing, and ingestion of soil. This scenario is considered to be a conservative representation of the land use conditions and environment of the land surrounding the PFSF. 2,000 hours/year occupancy time was assumed at the 500 meter distance along the owner controlled area fence. Although natural vegetation is quite sparse, it is conservatively assumed that the RESRAD default values for fodder intake are met both for the dairy and beef cattle. Default values for human consumption provided in RESRAD for air, milk, beef, and soil were assumed (with the inhalation value reduced from the default value by a factor of 0.228 (2000 hrs / 8760 hrs) to account for partial occupancy). The default values include inhalation of 1,918 m^3 of air with a mass loading factor for air of 2.0 E-4 g/m^3, ingestion of 92 liters of milk, ingestion of 63 kg of beef, and ingestion of 36.5 g soil. The resulting TEDE for the accident case was 2.70 mrem/yr at 500 meters downwind. This dose is a small fraction of the inhalation plus submersion doses identified above, and well below the 5 rem TEDE accident limit imposed by 10 CFR 72.106(b). The dominant exposure pathway was determined to be external exposure to contaminated land and the radionuclide with the largest contribution to the dose was Co-60.

8.2.8 100% Blockage of Air Inlet Ducts

Complete blockage of the air inlet ducts is classified as Design Event IV as defined by ANSI/ANS-57.9.

8.2.8.1 Cause of Accident

This event involves postulated complete blockage of all four storage cask air inlet ducts. Heat is normally removed from the canister shell by natural convection, and the heated air flows up the annulus by natural convection to four top outlet ducts, where the hot air exits the storage cask.

Since the HI-STORM storage casks have four air inlet ducts 90° apart, it is highly unlikely that all air inlet ducts could become blocked by blowing debris, snow, rodents, or other material. A severe windstorm could possibly blow debris against the bottom of the storage casks and possibly clog one or two of the inlet screens exposed to the wind, but the inlets on the leeward side of the cask would be expected to remain relatively free of dirt and debris. If a large sheet of plastic or a tarpaulin were to blow against a storage cask (which is unlikely since the RA is surrounded by two 8-ft high chain link fences that would be expected to catch such items), it could wrap partially around the storage cask and block, or partially block, the air inlet ducts on the windward side, but ducts on the opposite side would be expected to remain open.

One means of cutting off normal convection airflow would be a flood in which the height of the water exceeded the tops of the air inlet ducts. However, since the PFSF location and design assures that the upper surfaces of the storage pads are at an elevation above the elevation of the probable maximum flood in this area, blockage of the inlet ducts by flooding is not credible.

8.2.8.2 Accident Analysis

An analysis of this event is included in the HI-STORM SAR. The analysis assumes complete blockage of all four air inlet ducts, preventing air flow through the normal circulation paths. Holtec performed a transient thermal analysis of the HI-STORM system (HI-STORM SAR Section 11.2.13). The transient thermal model was an axisymmetric finite-volume (FLUENT) model. With the exceptions of the inlet air duct blockage and the specification of thermal inertia properties (i.e., density and heat capacity), the model was identical to the steady state models that Holtec used to evaluate storage system temperatures under normal conditions, described in Section 4.2.1.5.2. The model included the lowest MPC thermal inertia of any MPC design and conservatively bounding fuel decay heat load. Therefore, the temperature rise results obtained from this transient model bound the temperature rises that would occur for the MPC-24 or MPC-68 designs for this postulated event. Holtec's results of the blocked inlet duct thermal transient evaluation are presented in Figures 11.2.7 and 11.2.8, and Table 11.2.9 of the HI-STORM Storage Cask SAR (Reference 2). Holtec determined that the concrete reaches its short-term temperature limit in approximately 33 hours. Both the fuel cladding and the MPC confinement boundary temperatures are substantially below their respective short-term limits at 72 hours. Section 11.2.13 of the HI-STORM Storage Cask SAR also assesses canister internal pressure during this event. For the 100% inlet duct blockage scenario, conservatively assuming that 100% of the fuel rod cladding has ruptured, full solar insolation, and maximum decay heat, Holtec demonstrated that the canister pressure would not exceed the 125 psig canister internal design pressure at 33 hours after blockage of all four inlet ducts. Duct blockage would be detected by the cask temperature monitoring system and removed before temperatures could approach the maximum temperatures considered in this analysis.

8.2.8.3 Accident Dose Calculations

Analyses of 100 percent air inlet duct blockage conditions determined that fuel cladding temperatures do not reach the short-term limit for several days. Holtec's transient analysis of the HI-STORM system indicated that the concrete would reach its short-term temperature limit in approximately 33 hours. In the extremely unlikely occurrence of 100 percent blockage of the storage cask inlets, periodic surveillance of the storage cask temperature monitoring system would identify any duct blockage and the blockage would be expeditiously removed before short-term temperature limits are exceeded. The canister would maintain its confinement integrity, and there would be no releases of radioactivity. Therefore, no offsite doses would result from this accident.

The radiation dose to PFSF workers who remove debris blocking the inlet ducts are estimated to be double those conservatively estimated for the analysis of one-half the inlet ducts blocked in Section 8.1.3.4, or approximately 58.6 person-mrem.

8.2.9 Lightning

Lightning is classified as a natural phenomenon Design Event III as defined in ANSI/ANS-57.9.

8.2.9.1 Cause of Accident

This event would be caused by meteorological conditions at the site. Lightning would probably strike one of the grounded metal light poles in the vicinity of the storage pads since they are substantially higher than the storage casks (approximately 130 ft high). However, since the light poles are approximately 500 feet apart, it is possible that lightning may strike a cask that is not within the zone of protection offered by the light poles. NFPA 780 specifies the zone of protection for a 20 foot high structure (storage cask) as a 75 foot radial area around a 130 foot high structure (light pole).

8.2.9.2 Accident Analysis

If a storage cask were hit by lightning, the path to ground would be through the steel shell of the storage cask. The canister is surrounded by the cask steel and is therefore not a ground path. Since the effects of the lightning would be limited to the cask shell, a lightning strike would not affect canister integrity. The absorbed heat would be insignificant due to the very short duration of the event. Since the concrete in the HI-STORM cask is completely encased by steel, the concrete would not sustain any damage from the lightning.

8.2.9.3 Accident Dose Calculations

The canister would retain its confinement integrity, and there would be no releases of radioactivity. Therefore, no offsite doses would result from this accident.

8.2.10 Hypothetical Accident Pressurization

Accident pressurization is classified as a hypothetical Design Event IV as defined by ANSI/ANS-57.9. This is not a credible accident.

8.2.10.1 Cause of Accident

The spent fuel is stored in a manner that complies with the general design criteria 10 CFR 72.122(h), in that the spent fuel cladding is protected during storage against degradation that could lead to gross ruptures. The space internal to the confinement boundary is filled with an inert gas (helium) without the presence of air or moisture that might produce the potential for long term degradation of the spent fuel cladding. The spent fuel storage systems are designed to assure that fuel is maintained at temperatures below those at which fuel cladding degradation occurs, under normal, off-normal, and accident conditions. It is therefore highly unlikely that a spent fuel assembly with intact fuel cladding will undergo cladding failure during storage, and the assumption of complete cladding failure of all rods in a canister is extremely conservative. Failure of the cladding of all fuel rods contained in a canister is considered to be a non-credible event. Nevertheless, a hypothetical breach of all fuel rods in the canister and subsequent release of their fission and fill gases to the canister interior is analyzed. This would pressurize the canister shell and lids.

8.2.10.2 Accident Analysis

The analysis of this accident entails calculation of the free volume in the canister as well as the quantities of fill and fission gases in the fuel assemblies. The canister pressure is then determined based on the addition of 100 percent of the fuel rod fill gas and a conservative fraction of the fission gases to the helium already present in the canister. The fuel rods are initially assumed to be at a bounding fill pressure.

The evaluation of the canister pressurization accident is provided in HI-STORM Section 11.2.9. Table 4.3.4 of the HI-STORM SAR identifies the fractions of fission product gases assumed to be released from fuel rods into the canister. The vendor's structural analysis evaluates the canister confinement boundary for this accident condition. The structural analysis shows that stresses resulting from accident pressure, or the canister design basis internal pressure that exceeds accident pressure, are within applicable ASME BPVC Section III allowables.

8.2.10.3 Accident Dose Calculations

Since the analyses determined that the canister would retain its integrity, there are no radiological consequences for this accident.

8.2.11 Extreme Environmental Temperature

Extreme environmental temperature is classified as a natural phenomenon Design Event IV as defined in ANSI/ANS-57.9.

8.2.11.1 Cause of Accident

The extreme environmental temperature is assumed as a constant ambient temperature caused by extreme weather conditions. It was conservatively assumed that the temperature persists for a sufficiently long time for the storage casks to reach thermal equilibrium.

8.2.11.2 Accident Analysis

The extreme environmental temperature condition is analyzed, and results reported, in the HI-STORM storage cask SAR. The accident condition considers an environmental temperature of 125°F with full solar insolation for a sufficiently long time to reach steady-state conditions. In reality, this weather condition could not be maintained long enough, since the storage cask needs several days to reach equilibrium. The short-term fuel cladding temperature limit of 1058°F and the short-term concrete temperature limit of 350°F are not violated for the HI-STORM storage cask.

The maximum steady-state temperatures of key storage system components for the HI-STORM storage cask are provided in Table 8.2-1. As discussed in the HI-STORM SAR, the component temperatures are all within the temperature limits. Internal pressure for this condition is bounded by the hypothetical accident pressurization discussed in Section 8.2.10.

8.2.11.3 Accident Dose Calculations

There is no effect on the shielding performance of the system as a result of this condition, since the concrete temperature does not exceed the 350°F short-term concrete temperature limit. There is no effect on the criticality control features or the confinement function of the system as a result of this event. Based on this evaluation, there are no radiological consequences for this accident.

8.3 SITE CHARACTERISTICS AFFECTING SAFETY ANALYSIS

Site characteristics have been considered in the formation of the bases for these safety analyses. The PFSF site layout was considered in determining conservative χ/Q atmospheric dispersion factors to estimate doses from accidents involving postulated and hypothetical releases of radioactivity to a hypothetical individual located at the closest point of the OCA boundary to the source of radioactivity for the duration of the releases. The site location, relative to the nearest major highway, was considered in the assessment of effects of postulated explosions resulting from transportation accidents.

Thermal analyses of the effects of abnormally high ambient temperatures on the storage system considered climactic conditions of the area, and temperatures were selected to bound day/night average maximum temperatures that could occur over a period of several days (Reference 4).

Regional and site geology and seismology were used to define the design basis ground motion. Regional meteorology was considered in the determination of the design basis tornado parameters (Reference 15). The evaluation of the potential for fires is based on characteristics of the area surrounding the concrete storage pads, as well as the systems that will be used to transfer canisters and storage casks.

Information associated with aircraft flights in the vicinity of the PFSF, presented in Section 2.2 of this SAR, is based on data obtained from the U.S. Air Force, the Dugway Proving Ground, the Department of Energy (DOE), the Federal Aviation Administration (FAA), the National Transportation Safety Board, and the National Oceanic and Atmospheric Administration (NOAA). As discussed in Section 2.2, the probability of an aircraft impacting the PFSF and causing a radiological release is below applicable NRC regulatory standards and guidance and therefore is not considered to be a credible event. As also discussed in Section 2.2, other activities associated with military and

industrial facilities and military ranges in the vicinity of the PFSF pose no credible hazard to the facility.

8.4 BASIS FOR SELECTION OF OFF-NORMAL AND ACCIDENT CONDITIONS

ANSI/ANS 57.9 (Reference 1), the regulatory guidance in Sections 12.4.1 and 12.4.3 of NUREG-1567 (Reference 56), and the storage system SAR (Reference 2) were used as the basis for selecting off-normal and accident conditions to ensure all relevant or potential scenarios were considered.

Section 12.4.1 of NUREG-1567 indicates that examples of off-normal and accident conditions that should be considered in the SAR include those provided in ANSI/ANS-57.9. As described in the introduction to this Chapter 8 and Section 8.2, ANSI/ANS-57.9 served as a basis for identifying accidents and classifying them into off-normal conditions or accidents. ANSI/ANS-57.9 Design Event II conditions are described in PFSF SAR Section 8.1. ANSI/ANS-57.9 Design Events III and IV are described in Section 8.2. The examples of off-normal occurrences and accidents provided in ANSI/ANS-57.9 are included in this chapter, where applicable to the PFSF.

The regulatory guidance of NUREG-1567, Section 12.4.3, was also used as a basis for selecting off-normal and accident conditions to ensure all relevant or potential scenarios were considered. Consideration of the eight bullet items listed in Section 12.4.3 included the following:

Site Characteristics

Consideration was given to the following in the analysis of the PFSF site characteristics:

- Thermal analyses of the effects of abnormally high ambient temperatures on the storage system considered climactic conditions of the area, and temperatures were selected to bound average daily (day/night) maximum temperatures that could occur over a period of several days (Section 8.1.2).
- As described in Sections 2.6 and 8.2.1, a seismological evaluation of the PFSF

siting area was performed. Although the HI-STORM cask storage system has been analyzed for generic design earthquakes (DE) described in its SAR, the storage system was also analyzed for the PFSF site specific design basis ground motion. The site specific design basis ground motion is discussed in Section 3.2.10 and is represented by response spectra curves developed specifically for the PFSF site.

- Section 8.2.2.2 indicates that for the extreme wind accident, the maximum wind speed and pressure drop analyzed by the storage system vendors substantially envelopes the site specific requirements defined in Regulatory Guide 1.76 for tornado Region III. The Canister Transfer Building is designed to withstand the effects of the Region III tornado and pressure drop forces.

- In the case of flooding, Section 8.2.3 assesses the site specific effects of flooding as well as providing information regarding capabilities of the vendor storage casks, which are designed to withstand severe flooding including full submergence.

- The explosion analysis in Section 8.2.4 considers the effects of explosion at the stationary rocket engine test facility located approximately 2.5 miles south-southeast of the PFSF site. The effects of explosions from a transportation accident on the Skull Valley Road, 2 miles from the nearest storage pad, and from propane postulated to have leaked from the largest on-site storage tank, were also evaluated.

- Fires evaluated in Section 8.2.5, and design measures to mitigate the effects of fires, are based on specific fire hazards associated with the PFSF, including wildfires in the vicinity.

- The hypothetical storage cask drop/tipover not only discusses the vendor's generic analysis, but also factors associated with site-specific storage pad concrete and soil parameters.

- Section 2.2 evaluates the threat of aircraft crashes and determines that the

probability of an aircraft impacting the PFSF and causing a radiological release is below applicable NRC regulatory standards and guidance and therefore is not considered to be a credible event. As also discussed in Section 2.2, other activities associated with military facilities and military ranges in the vicinity of the PFSF pose no credible hazard to the facility. The analyses of the hazard posed by aircraft and other military activities in the vicinity of the PFSF are based on the specific characteristics of the PFSF site and aircraft operations, including military, in the area.

Automatic and Manual Safety Features

Analysis of the canister transfer operations identified the need for single-failure-proof canister and transfer cask lifting equipment which was incorporated into the design of lifting devices. As discussed in Section 8.1.1.3, the overhead bridge crane, semi-gantry crane, canister downloader and associated lifting devices used to handle shipping casks, transfer casks and canisters in the Canister Transfer Building are all designed to meet the criteria for single-failure-proof lifting devices and to hold the lifted load in place in the event of loss of electrical power. The cranes are seismically qualified to assure dropped loads will not occur in the event of the design basis ground motion.

Necessary Instrumentation and Control Features

Analysis of the method for detecting blockage of the storage cask air paths at existing ISFSIs smaller than the PFSF (i.e., daily visual inspection of the cask vents) identified a desire for an alternative method that has a significant ALARA benefit. It was determined to use a cask temperature monitoring system that continuously monitors the temperature of the casks. This allows adequate monitoring of the cask thermal performance without subjecting operators to a daily radiation dose. To provide assurance of the availability and reliability of the temperature monitoring system, the following features are provided: backup power, procedures to periodically calibrate components and test the operability of the monitoring system, and a daily review of the

monitoring output to detect trends of increasing cask temperature.

Although important for ALARA purposes, the temperature monitoring system is not classified as Important to Safety. In the event of failure of the system, a supervised alarm and detection system (which is a separate alarm from the high temperature alarm) will notify operators who will provide visual inspections of the affected cask(s) until the monitoring system is repaired.

The visual inspection of the cask vents to verify no blockage will still be performed, but on a quarterly basis. The use of the temperature monitoring instrumentation to reduce the frequency of visual inspections from a daily to a quarterly activity will greatly reduce the radiation exposure of personnel.

As discussed in Section 7.3.5, airborne radioactivity concentrations will be detected by continuous air monitors located in the exhaust of each canister transfer cell. The continuous air monitors will include local alarms to warn operating personnel in the unlikely event of an airborne release, remote alarm in the Security and Health Physics Building alarm station to ensure coverage at all times, and charting capability to provide data necessary to quantify any release.

Sequences of Operations and Projected Contingency Actions

Analysis included a review of the sequence of operations associated with shipping cask receipt, canister transfer, and movement of the storage casks to the storage pads. The "stacked cask" configuration, where the transfer cask is supported on the shipping cask or storage cask, was thoroughly assessed and it was decided that the Canister Transfer Building should be qualified to withstand the effects of tornado winds and tornado-driven missiles to shelter this configuration in the operations sequence from the effects of tornadoes. Section 8.2.1.2 identifies several requirements associated with canister transfer operations that were the result of consideration of a seismic event occurring at different stages of the canister transfer sequence. For instance, prior to disconnecting

the crane from the shipping cask after it is placed in a canister transfer cell, seismic support struts are secured to the cask. The stacked cask configuration was evaluated for stability in the event of a DE. During the canister transfer operation, the crane is not disconnected from the transfer cask that is supported by the shipping cask or storage cask until seismic support struts are connected to the transfer cask to assure its stability.

The analysis considered the occurrence of fires (Section 8.2.5) involving 1) wildfires in the vicinity of the PFSF; 2) 300 gallon fuel capacity heavy haul vehicle with a shipping cask in the cask load/unload bay; 3) 50 gallon fuel capacity cask transporter in a canister transfer cell; 4) cask transporter with a storage cask enroute to the storage pads; and 5) cask transporter with a storage cask on the storage pads. Several restrictions resulted from the assessment of potential fires, including the cask transporter not permitted in a canister transfer cell while transfer operations are in process and, for rail delivery/retrieval of shipping casks, the train locomotives are required by administrative procedure to stay out of the Canister Transfer Building.

The sequence of operations was also considered in regards to loss of electrical power as described in Section 8.1.1.3, which states:

> "It is postulated that a loss of external electrical power event could occur during the canister transfer operations that are conducted in the PFSF Canister Transfer Building. This could take place at any point in the transfer sequence. Consideration is given to the loss of power: (1) while a loaded shipping cask, with the impact limiters removed, is being unloaded off the heavy haul trailer or rail car; (2) while the canister is being raised from the shipping cask into the transfer cask; (3) while the loaded transfer cask is being moved from above the shipping cask to above the storage cask; and (4) while the canister is being lowered from the transfer cask into the storage cask."

Characteristics of Facilities and Equipment

The location of the cooling air inlet ducts at the bottom of the storage casks, a characteristic of their design, gives rise to consideration for potential duct blockage due to buildup of material on the storage pads due to high winds, tornado, heavy snow, and flooding, evaluated in Sections 8.1.3 and 8.2.8. Section 8.1.4 evaluates bumping of the canister against the sides of the shipping or storage cask during canister transfer, which relates to characteristics of the cask configuration during this operation. Characteristics of the fuel and canister were accounted for in assessing the possibility and consequences of canister leakage and canister pressurization accidents, discussed in Sections 8.2.7 and 8.2.10, respectively. The characteristics of the heavy haul vehicle and cask transporter (fuel tank capacities) were considered in evaluating the consequences of postulated fires, as discussed above. Vertical drop of a storage cask (Section 8.2.6) considered characteristics of the cask transporter as well as the storage pads.

Consequences of Failures of Structures, Systems, and Components (SSCs)

Consideration of failure of lifting devices led to the decision to require that these devices meet single-failure-proof requirements to avoid the consequences of dropped casks and/or canisters.

Although it was determined that canister leakage with 100% of the fuel rod cladding assumed to have failed is not a credible event, the consequences of this hypothetical accident are evaluated in Section 8.2.7. The consequences of this accident bound those of credible accidents that could occur at the PFSF.

Consideration was also given to equipment malfunctions. One condition that was assessed was postulated malfunction of the transfer cask doors during the canister transfer operation. This was not included as an off-normal event since it involves routine operation that causes a schedular delay, but does not challenge safety. The results of this assessment are included in the following paragraphs:

Assessment of Transfer Cask Door Malfunction

It is very unlikely that the transfer cask doors would fail due to the simplicity and inherent reliability of the door design and their opening/closing mechanism. The doors of the HI-TRAC transfer cask are equipped with multiple wheels that run along guided rails, enclosed, with no obstacles or protrusions. The doors are housed in such a way that they cannot come off the tracks. The reduced friction associated with the wheels enables the HI-TRAC doors to be manually opened and closed by the operators, and handles are provided on the doors for this purpose. The transfer cask doors of the transfer casks will be tested during the preoperational testing program to verify that they operate smoothly and there are no obstructions or misalignment that could cause jamming.

In the event the transfer cask sliding doors fail to close after the canister has been hoisted up into the transfer cask in preparation for a transfer operation, the transfer operation will cease, the canister will be lowered back down into the underlying cask, the transfer cask removed from the cask, the lid placed back on the cask, and the transfer cask doors or door operating mechanisms repaired.

In the event the transfer cask sliding doors are closed and fail to open when it is desired to lower the canister from the transfer cask into an underlying storage or

shipping cask, then actions would be taken to make necessary repairs and open the doors with the canister in the transfer cask while the transfer cask is supported by the underlying cask. Dose considerations would be associated with this repair operation, as dose rates at the side of transfer casks are relatively high compared to dose rates on the sides of storage casks (as indicated in Tables 7.3-1 through 7.3-4), and use of temporary shielding may be desirable. There is no hurry or time constraint associated with this operation, as the canister can remain housed in the transfer cask indefinitely without posing a safety concern. Corrective action would be carefully planned and executed in a deliberate controlled manner that assures doses to personnel involved are maintained ALARA. If operators are unable to slide the doors open manually, a portable cable winch could be connected and used to provide the additional force necessary to slide the doors open even if a wheel is jammed or a wheel bearing seized.

Historical Considerations

Several accident conditions were evaluated not because they represent credible scenarios, but based on historical considerations - the fact that these conditions were considered in the licensing basis of other ISFSIs and/or in the PFSF storage cask vendor SARs. The hypothetical storage cask tipover and hypothetical accident pressurization are examples of accidents considered partly as the result of historical reasons, which do not represent credible accident scenarios. Section 12.4 of NUREG-1567 states that "Credible accident level events and conditions should be analyzed (or

bounded by design basis accidents) to demonstrate that the consequences do not exceed the limits of 10 CFR 72.106(b). (Design basis accidents are the subset of all credible accidents that bound the entire spectrum of accidents that could occur in terms of the nature and consequences of accidents.) Instead of providing analysis for every credible accident scenario, the SAR may choose to characterize and analyze the subset of design basis events." Section 12.4.1 of this NUREG states that "Credibility is the determinant for analysis and satisfaction of criteria for accident-level events and conditions." The PFSF SAR exceeds these requirements and analyzes several incredible accident scenarios, largely due to historical precedent.

Consequences of Human Error

Section 8.1.4 assesses consequences of the occurrence of postulated operator error during the canister transfer operation. As stated in this section:

> "Load drops by the overhead bridge crane, the semi-gantry crane, or the canister downloader are not considered credible because of the single-failure-proof design of these lifting systems. Postulated events are: (1) while lifting the canister out of the shipping cask and into the transfer cask, personnel error could result in lifting the canister too high so it contacts the top of the transfer cask; (2) during placement of the canister into the storage cask, improper operation of the crane or canister downloader may cause a lateral impact against the inside of the storage cask (this could also occur during transfer of the storage cask to a storage pad, where an inadvertent movement could cause lateral impact of the canister against the inside of the storage cask); and (3) during canister lowering into the storage cask with the transfer cask improperly aligned with the storage cask, the canister could encounter interference, such as catching on the edge of the storage cask."

It is considered that the off-normal contamination release event (evaluated in Section 8.1.5) could occur as the result of operator error.

Consideration was given to the potential for human error resulting in an on-site vehicle, such as a pickup truck, colliding with an important to safety structure, system, or component (SSC). SSCs of concern from the standpoint of vehicle collisions are shipping casks, storage casks and the Canister Transfer Building. Shipping casks outside of the Canister Transfer Building will either be on rail cars or heavy haul vehicle trailers in their certified 10 CFR 71 shipping configuration, with the impact limiters installed. If an on-site vehicle, such as a pickup truck, were to collide with a rail car or heavy haul trailer, it would be no different from a collision occurring during shipment over the public highways, for which 10 CFR 71 requirements provide adequate assurance that the shipping cask will retain its integrity. The designs of both the storage casks and Canister Transfer Building are required to withstand impact by tornado-driven missiles, including automobiles. Section 3.2.8.4 indicates that the Canister Transfer Building must be designed to withstand the effects of an automobile weighing 3990 lbs (Spectrum II missile) with a horizontal velocity of 134 ft/sec (91 mph). The storage casks are designed for tornadoes having higher wind speeds, and must withstand the effects of a tornado-driven automobile weighing 1,800 kg (3,968 lb, Spectrum I missile) traveling at 126 mph (Section 8.2.2.2). On-site vehicles will generally be traveling at relatively low speeds, on the order of 15 mph, and the effects of an on-site vehicle striking the Canister Transfer Building are bounded by the effects of tornado-driven missiles, which were evaluated in the storage cask vendor SARs and determined to be acceptable. Based on the above, safety functions performed by SSCs important to safety within the facility will not be challenged by postulated accidents occurring as the result of human error involving on-site vehicles.

In order to prevent an on-site vehicle from running into the relatively large capacity group of propane tanks that will supply propane for heating the Canister Transfer

Building and Security and Health Physics Building (described in Sections 4.3.12 and 8.2.4.1), vehicle barriers will be installed around these tanks, as indicated in Section 8.2.4.2.

Events from Storage System SAR

In addition to ANSI/ANS 57.9, and the regulatory guidance in Sections 12.4.1 and 12.4.3 of NUREG-1567, the HI-STORM storage system SAR was used as a basis for selecting off-normal and accident conditions.

Conclusion

Based on the above, the accident analysis in the PFSF SAR is based on a thorough review of a wide range of accident level events and conditions in accordance with the regulatory guidance in NUREG-1567. This approach ensured that relevant or potential off-normal and accident scenarios are considered in the PFSF SAR.

THIS PAGE INTENTIONALLY LEFT BLANK

8.5 REFERENCES

1. ANSI/ANS-57.9, Design Criteria for an Independent Spent Fuel Storage Installation (Dry Storage Type), American Nuclear Society, 1984.

2. Final Safety Analysis Report for the Holtec International Storage and Transfer Operation Reinforced Module Cask System (HI-STORM 100 Cask System), Holtec Report HI-2002444, Docket 72-1014, Revision 0, July 2000.

3. (deleted)

4. (deleted)

5. (deleted)

6. Regulatory Guide 1.145, Atmospheric Dispersion Models for Potential Accident Consequence Assessments at Nuclear Power Plants, Revision 1, U.S. NRC, 1983.

7. Federal Guidance Report No. 11, Limiting Values of Radionuclide Intake and Air Concentration and Dose Conversion Factors for Inhalation, Submersion, and Ingestion, DE89-011065, U.S. Environmental Protection Agency, 1988.

8. Holtec Report No. HI-971631, Multi-Cask Response at the PFS ISFSI, Revision 0, dated May 19, 1997.

9. NUREG/CR-0098, Development of Criteria for Seismic Review of Selected Nuclear Power Plants, May 1978.

10. (deleted)

11. SUPER SASSI/PC User's Manual, Stevenson & Associates, Rev. 0, 1996.

12. ANSYS User's Manual for Revision 5.0, ANSYS, Inc. (formerly Swanson Analysis Systems), Houston, PA, 1994.

13. G.W. Housner, The Behavior of Inverted Pendulum Structures During Earthquakes, Bulletin of the Seismological Society of America, Vol. 53, No. 2 (pp 403-417), February 1963.

14. SPECTRA 2.0 User's Manual, Stevenson & Associates, 1996.

15. Regulatory Guide 1.76, Design Basis Tornado for Nuclear Power Plants, U.S. NRC, April 1974.

16. NUREG-0800, Standard Review Plan for the Review of Safety Analysis Reports for Nuclear Power Plants, July 1989.

17. Regulatory Guide 1.91, Evaluations of Explosions Postulated to Occur on Transportation Routes Near Nuclear Power Plants, Revision 1, U.S. NRC, February 1978.

18. IAEA Safety Standards, Regulations for the Safe Transport of Radioactive Material, IAEA Safety Series No. 6, 1985.

19. Gregory, J.J., et. al., Thermal Measurements in a Series of Large Pool Fires, SAND 85-1096, Sandia National Laboratories, August, 1987.

20. Topical Safety Analysis Report for the Holtec International Storage, Transport, and Repository Cask System, (HI-STAR 100 Cask System), Holtec Report HI-951251, Docket 71-9261, Revision 9, April 2000.

21. UCID-21246, Dynamic Impact Effects on Spent Fuel Assemblies, Lawrence Livermore National Laboratory, Chun, Witte, Schwartz, October 20, 1987.

22. ACI-349, Code Requirements for Nuclear Safety-Related Concrete Structures, American Concrete Institute, September 1985.

23. (deleted)

24. NUREG-1536, Standard Review Plan for Dry Cask Storage Systems, Final Report, January 1997.

25. SAND80-2124, Transportation Accident Scenarios for Commercial Spent Fuel, Sandia National Laboratories, February 1981.

26. Passive/Evolutionary Regulatory Consequence Code (PERC2), Version 0, Level 1; Computer Code Designator NU-226.

27. Trojan ISFSI Safety Analysis Report, Trojan Nuclear Plant, Portland General Electric Company, Revision 0, Docket No. 72-17.

28. Geomatrix Consultants, Inc, Deterministic Earthquake Ground Motions Analysis, Private Fuel Storage Facility, Skull Valley, Utah, prepared by Geomatrix Consultants, Inc. and William Lettis & Associates, Inc., GMX#3801.1 (Rev. 0), March 1997.

29. PFS Letter, Parkyn to Delligatti (NRC), Request for Exemption to 10 CFR 72.102(f)(1), dated April 2, 1999.

30. Federal Guidance Report No. 12, External Exposure to Radionuclides in Air, Water, and Soil, EPA 402-R-93-081, U.S. Environmental Protection Agency, September 1993.

31. Interim Staff Guidance-5, Normal, Off-normal, and Hypothetical Accident Dose Estimate Calculations for the Whole Body, Thyroid, and Skin, U.S. NRC Spent Fuel Project Office, October 6, 1998.

32. ANSI N14.5, Radioactive Materials - Leakage Tests on Packages for Shipment, American National Standards Institute, 1977.

33. Topical Safety Analysis Report for the Holtec International Storage, Transport, and Repository Cask System, (HI-STAR 100 Cask System), Holtec Report HI-941184, Docket 72-1008, Revision 8, August 1998.

34. NUREG/CR-6487, Containment Analysis for Type B Packages Used to Transport Various Contents, prepared for the U.S. NRC by Lawrence Livermore National Laboratory, November 1996.

35. NUREG-1617, Standard Review Plan for Transportation Packages for Spent Nuclear Fuel, Draft Report for Comment, March 1998.

36. RESRAD Computer Code, Version 5.82 for Windows.

37. Regulatory Guide 1.111, Methods for Estimating Atmospheric Transport and Dispersion of Gaseous Effluents in Routine Releases from Light-Water-Cooled Reactors, Revision 1, July 1977.

38. Interim Staff Guidance-3, Post Accident Recovery and Compliance with 10 CFR 72.122(l), U.S. NRC Spent Fuel Project Office, October 6, 1998.

39. Fire Protection Handbook, Sixteenth Edition, National Fire Protection Association, 1986.

40. Report by Carlton M. Britton, dated February 8, 1999; This report is Attached to the Response to PFSF Safety RAI No. 2, SAR 8-3, submitted to the NRC by PFS letter J. Parkyn to Director, Office of Nuclear Material Safety and Safeguards, dated February 10, 1999.

41. PFS Letter, Parkyn to U.S. NRC Document Control Desk, Request for Exemption to 10 CFR 72.102(f)(1), dated August 24, 1999.

42. Holtec Report No. HI-992277, Multi-Cask Response at the PFS ISFSI, From 2000 Year Seismic Event, Revision 0, dated August 20, 1999.

43. Interim Staff Guidance-12, Buckling of Irradiated Fuel Under Drop Conditions, U.S. NRC Spent Fuel Project Office, May 21, 1999

44. PFSF Calculation No. 05996.02-UR-5, Dose Rate Estimates from Storage Cask Inlet Duct Clearing Operations, Revision 2, Stone & Webster.

45. PFSF Calculation No. 05996.01-UR-3, Postulated Release of Removable Contamination from Canister Outer Surfaces - Dose Consequences, Revision 2, Stone & Webster.

46. PFSF Calculation No. 05996.02-UR-009, Accident Dose Calculations at 500m and 3219m Downwind for Canister Leakage Under Hypothetical Accident Conditions for the Holtec MPC-68 and SNC TranStor Canisters, Revision 1, Dade Moeller & Associates.

47. PFSF Calculation No. 05996.02-UR-010, RESRAD Pathway Analysis Following Deposition of Radioactive Material From the Accident Plumes, Revision 1, Dade Moeller & Associates.

48. American Society for Testing and Materials (ASTM) Standard D975-1997, Standard Specification for Diesel Fuel Oils.

49. Fire Protection Handbook, Sixteenth Edition, National Fire Protection Association, 1986.

50. (deleted)

51. Rudolph Meyer, Explosives, 3rd Edition, 1987.

52. Department of the Army Technical Manual TM 5-1300, "Structures to Resist the Effects of Accidental Explosions," June 1969.

53. (deleted)

54. (deleted)

55. (deleted)

56. NUREG-1567, Standard Review Plan for Spent Fuel Dry Storage Facilities, Draft Report for Comment, October 1996.

57. Alliant Techsystems Inc. letter, C.F. Davis to J.L. Donnell, Private Fuel Storage Facility – Skull Valley Goshute Reservation, dated June 26, 1997.

58. Federal Emergency Management Agency (FEMA), Handbook of Chemical Hazards Analysis, dated 1989.

59. PFSF Calculation No. 05996.02-P-005, Heat Flux to the Nearest Storage Casks Resulting From Pool Fires Hypothesized to Occur if the Diesel Fuel Inventory of Two Railroad Locomotives Leaks from the Fuel Tanks onto the Ground and Ignites, Revision 1, Stone & Webster.

60. The Car and Locomotive Cyclopedia of American Practices, Fourth Edition, Association of American Railroads, Mechanical Division, 1980.

61. TTX Company, TTX Equipment Guide, dated December 1999.

62. NFPA 30, Flammable and Combustible Liquids Code, National Fire Protection Association, 1996.

63. NFPA 13, Standard for the Installation of Sprinkler Systems, National Fire Protection Association, 1996.

64. NFPA 58, Liquefied Petroleum Gas Code, National Fire Protection Association, 1998.

65. Uniform Building Code, International Conference of Building Officials, 1994 edition.

66. PFSF Calculation No. 05996.02-P-006, Plume and Upper Layer Temperatures in Canister Transfer Building Fire Scenarios, Revision 0, Risk Technologies.

67. NISTIR 5486-1, FPEtool, Version 3.2, U.S. Department of Commerce Technology Administration, National Institute of Standards, April 1995.

68. ASTM E-119, Standard Test Methods for Fire Tests of Building Construction and Materials, 1998.

69. Reinforced Concrete Fire Resistance, Concrete Reinforcing Steel Institute, 1980.

70. PFSF Calculation No. 05996.02-P-007, Radiant Heat Flux Calculations for Canister Transfer Building Heavy Haul Vehicle Tire Fire, Revision 0, Risk Technologies.

71. Society of Fire Protection Engineers (SFPE) Handbook, Second Edition, published by the National Fire Protection Association, Boston MA, 1995.

72. J&R Engineering Company, Inc. fax from R. Johnston to DW Lewis of Stone & Webster, J&R Engineering Drawing No. 1481L001, Rev. B, "Preliminary Layout TL250-40 Commonwealth Edison," with revisions to suit PFSF, dated June 15, 2000.

73. Lift Systems electronic letter from J. Pelkey to DW Lewis of Stone & Webster, Lift Systems Drawing No. MS204, Rev. 6-3-2000, "Nuclear Fuel Crawler Cask Transporter for the NAC Storage Cask at Palo Verde Nuclear Generating Station," dated June 14, 2000.

74. PFSF Calculation No. 05996.02-UR(D)-13, Dose Calculation at 500 Meters for the HI-STORM BWR Canister for Postulated Accident Conditions, Revision 0, Stone & Webster.

75. PFSF Calculation No. 05996.01-UR-1, Accident χ/Qs for the Private Fuel Storage Facility (PFSF), Revision 2, Stone & Webster.

76. PFSF Calculation No. 05996.02-P-008, Propane Release Analysis With Dispersion and Delayed Ignition, Revision 1, Risk Technologies.

77. Material Safety Data Sheet for Commercial Propane, Air Products Corporation, Allentown, Pennsylvania.

78. Safety Analysis Report for the Ventilated Storage Cask System, Pacific Sierra Nuclear Associates Report PSN-91-001, Revision 0A, December 1993

79. TranStor Storage System Weight and C.G. Calculation, Sierra Nuclear Corporation Calculation No. TSL-1.10.06.01, Revision 2, November 23, 1998.

80. TranStor Storage Cask Assembly, Sierra Nuclear Corporation Drawing No. TCC-001, Revision 1, November 20, 1998.

81. Geomatrix Consultants, Inc., "Development of Design Ground Motions for the Private Fuel Storage Facility, Revision 1, March 2001.

82. Holtec Report No. HI-2012640, Multi-Cask Response at the PFS ISFSI, From 2000 Year Seismic Event (Rev. 2), August 2001.

83. Holtec Report No. 2012653, PFSF Site-Specific HI-STORM Drop/Tipover Analyses, Revision 2, October 2001.

84. PFS letter, Donnell to U.S. NRC, PFSF Site-Specific HI-STORM Evaluation, dated May 31, 2001.

TABLE 8.1-1

STORAGE SYSTEM OFF-NORMAL MAXIMUM AMBIENT TEMPERATURE EVALUATION

	HI-STORM Storage System Temperatures (°F)
Ambient Air	100
Storage Cask Air Outlet	206
Storage Cask Outer Surface	151
Storage Cask Inner Concrete	192
Canister Outer Surface	327
Fuel Clad	765

Note: The above results are for the bounding canister temperature case (PWR or BWR).

TABLE 8.1-2

PARTIAL BLOCKAGE OF STORAGE CASK AIR INLET DUCTS TEMPERATURE EVALUATION

	HI-STORM Storage System Temperatures (°F)
Ambient Air	80
Storage Cask Air Outlet	202
Storage Cask Outer Surface	135
Storage Cask Inner Concrete	186
Canister Outer Surface	322
Fuel Clad	754

Note: The above results are for the bounding canister temperature case (PWR or BWR).

TABLE 8.2-1

STORAGE SYSTEM EXTREME ENVIRONMENTAL TEMPERATURE EVALUATION

	HI-STORM Storage System Temperatures (°F)
Ambient Air	125
Storage Cask Air Outlet	231
Storage Cask Outer Surface	176
Storage Cask Inner Concrete	217
Canister Outer Surface	352
Fuel Clad	790

Note: The above results are for the bounding canister temperature case (PWR or BWR).

THIS PAGE INTENTIONALLY LEFT BLANK

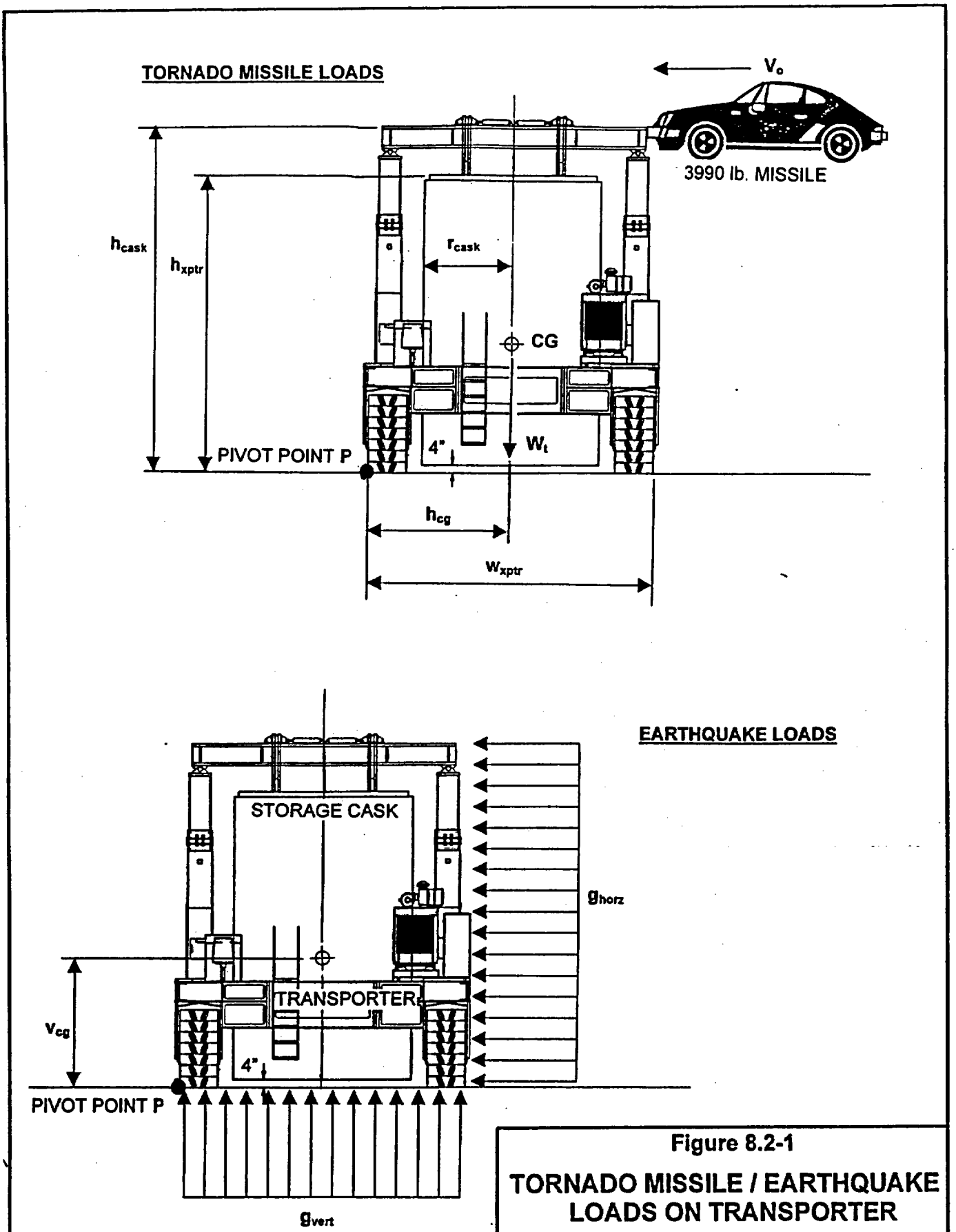

Figure 8.2-1

TORNADO MISSILE / EARTHQUAKE LOADS ON TRANSPORTER

PRIVATE FUEL STORAGE FACILITY
SAFETY ANALYSIS REPORT

CHAPTER 9

CONDUCT OF OPERATIONS

TABLE OF CONTENTS

SECTION	TITLE	PAGE
9.1	ORGANIZATIONAL STRUCTURE	9.1-1
9.1.1	PFSLLC Organization	9.1-2
9.1.1.1	PFSLLC Functions, Responsibilities, and Authorities	9.1-2
9.1.1.2	PFSLLC In-House Organization	9.1-4
9.1.1.2.1	Pre-licensing Organization	9.1-4
9.1.1.2.2	Licensing and Construction Organization	9.1-5
9.1.1.2.3	Operational Organization	9.1-6
9.1.1.3	Interrelationships with Contractors and Suppliers	9.1-7
9.1.1.4	Technical Staff	9.1-8
9.1.2	Operating Organization, Management, and Administrative Control System	9.1-9
9.1.2.1	On-Site Organization	9.1-9
9.1.2.1.1	Safety Review Committee	9.1-10
9.1.2.1.2	Mechanical Maintenance/Operations	9.1-11
9.1.2.1.3	Electrical and Instrument Maintenance	9.1-12
9.1.2.1.4	Radiation Protection	9.1-12
9.1.2.1.5	Security	9.1-13
9.1.2.1.6	Quality Assurance	9.1-13
9.1.2.1.7	Site Administrative and Engineering Staff	9.1-13
9.1.2.1.8	Off-Site Nuclear Engineering Support	9.1-14

TABLE OF CONTENTS (cont.)

SECTION	TITLE	PAGE
9.1.2.2	Personnel Functions, Responsibilities, and Authorities	9.1-14
9.1.2.2.1	General Manager/Chief Operating Officer	9.1-14
9.1.2.2.2	Radiation Protection Manager	9.1-16
9.1.2.2.3	Radiation Protection Technicians	9.1-16a
9.1.2.2.4	Lead Mechanic/Operator	9.1-17
9.1.2.2.5	Mechanic	9.1-18
9.1.2.2.6	Lead Instrument and Electrical Technician	9.1-19
9.1.2.2.7	Instrument and Electrical Technicians	9.1-19
9.1.2.2.8	Lead Quality Assurance Technician	9.1-20
9.1.2.2.9	Quality Assurance Technician and Quality Assurance Auditor	9.1-20
9.1.2.2.10	Lead Nuclear Engineer	9.1-21
9.1.2.2.11	Nuclear Engineers	9.1-21
9.1.2.2.12	Administrative	9.1-21
9.1.2.2.13	Security Captain	9.1-22
9.1.2.2.14	Emergency Preparedness Coordinator	9.1-22
9.1.3	Personnel Qualification Requirements	9.1-23
9.1.3.1	Minimum Qualification Requirements	9.1-23
9.1.3.1.1	General Manager/Chief Operating Officer	9.1-23
9.1.3.1.2	Radiation Protection Manager	9.1-24
9.1.3.1.3	Radiation Protection Technicians	9.1-24
9.1.3.1.4	Lead Mechanic/Operator	9.1-24
9.1.3.1.5	Mechanics	9.1-25
9.1.3.1.6	Lead Instrument and Electrical Technician	9.1-25
9.1.3.1.7	Instrument and Electrical Technicians	9.1-25

TABLE OF CONTENTS (cont.)

SECTION	TITLE	PAGE
9.1.3.1.8	Lead Quality Assurance Technician	9.1-26
9.1.3.1.9	Quality Assurance Technician and Quality Assurance Auditor	9.1-26
9.1.3.1.10	Lead Nuclear Engineer	9.1-26
9.1.3.1.11	Nuclear Engineers	9.1-27
9.1.3.1.12	Security Captain	9.1-27
9.1.3.1.13	Emergency Preparedness Coordinator	9.1-27
9.1.3.2	Personal Qualification Requirements	9.1-27
9.1.4	Liaison with Outside Organizations	9.1-28
9.2	PRE-OPERATIONAL TESTING AND OPERATION	9.2-1
9.2.1	Administrative Procedures for Conducting Test Program	9.2-1
9.2.2	Pre-operational Test Plan	9.2-2
9.2.2.1	Construction Testing	9.2-2a
9.2.2.2	Physical Facilities Testing	9.2-3
9.2.2.3	Operational Testing	9.2-4
9.2.3	Operational Readiness Review Plan	9.2-6
9.2.4	Operating Startup Plan	9.2-8
9.3	TRAINING PROGRAM	9.3-1
9.3.1	Program Description	9.3-1
9.3.2	Initial Training	9.3-2
9.3.2.1	General Employee Training	9.3-3
9.3.2.2	Job Specific and Certification Training	9.3-3
9.3.3	Continuing Training	9.3-6
9.3.4	Administration and Records	9.3-7

TABLE OF CONTENTS (cont.)

SECTION	TITLE	PAGE
9.4	NORMAL OPERATIONS	9.4-1
9.4.1	Procedures	9.4-1
9.4.1.1	Categories of Procedures	9.4-1
9.4.1.1.1	Administrative Procedures	9.4-1
9.4.1.1.2	Radiation Protection Procedures	9.4-2
9.4.1.1.3	Maintenance and Surveillance Procedures	9.4-2a
9.4.1.1.4	Operating Procedures	9.4-3
9.4.1.1.5	Quality Assurance Procedures	9.4-3
9.4.1.2	Procedure Preparation	9.4-4
9.4.1.3	Training on Procedures	9.4-5
9.4.2	Records	9.4-5
9.4.2.1	Records Management System	9.4-5
9.4.2.2	Records to be Maintained	9.4-5
9.5	EMERGENCY PLANNING	9.5-1
9.6	DECOMMISSIONING PLAN	9.6-1
9.6.1	PFSF Decommissioning Program	9.6-1
9.6.2	Cost of Decommissioning and Funding Method	9.6-1
9.6.3	Decommissioning Facilitation	9.6-2
9.6.4	Recordkeeping for Decommissioning	9.6-2

TABLE OF CONTENTS (cont.)

SECTION	TITLE	PAGE
9.7	PHYSICAL SECURITY AND SAFEGUARDS CONTINGENCY PLANS	9.7-1

TABLE OF CONTENTS (cont.)

LIST OF FIGURES

FIGURE	TITLE
9.1-1	PRE-LICENSING ORGANIZATION
9.1-2	LICENSING AND CONSTRUCTION ORGANIZATION
9.1-3	OPERATIONAL ORGANIZATION

CHAPTER 9

CONDUCT OF OPERATIONS

9.1 ORGANIZATIONAL STRUCTURE

The Private Fuel Storage L.L.C. (PFSLLC) is a limited liability company organized under the laws of the State of Delaware. The PFSLLC is owned by eight member utilities contributing equity in equal amounts throughout the pre-license application phase and in varying amounts after submittal of the License Application to the NRC. Capital contributions are invoiced and paid quarterly in advance of expenditure, and no pre-construction debt is incurred. Each member (members must be U.S. entities) selects one member of the Board of Managers. The Chairman is selected by the Board.

Spent fuel storage customers (both PFSLLC members and non-members) will enter into Service Agreements with the PFSLLC that will provide for the funding of facility construction and operation. An indexed one time fee will be assessed in three payments. The first payment will be due at the commencement of construction, the second approximately one year before shipment, and the final payment at time of shipment. All payments will be received by the PFSLLC prior to receipt of spent fuel at the PFSF. Customers will also pay transportation fees, an indexed annual fee for storage, a per-canister decommissioning fee (paid in advance), and a decommissioning assessment if the customer is responsible for any contamination found at the PFSF. No customer Service Agreements may be assigned by the customer without express PFSLLC permission.

9.1.1 PFSLLC Organization

The PFSLLC organization at the time of filing of the License Application consists of a

Board of Managers, with specific committees made up of members of the Board or representatives of their companies, as well as contracted support for engineering and design, public affairs, legal counsel and other necessary expertise. The Board committees were established in several functional work areas to manage and accomplish needed tasks to prepare this license application and associated reports. The PFSLLC will name additional officers and hire additional employees as the project moves from the pre-licensing phase to the licensing and construction phase, and subsequently, into the operational phase. Figures 9.1-1, 9.1-2 and 9.1-3 identify the PFSLLC organization that will be in place through each of these three phases. The Board of Managers directs and oversees activities in all three phases, and is described in the following paragraphs:

9.1.1.1 PFSLLC Functions, Responsibilities and Authorities

The PFSLLC organization is structured to be operated by a Board of Managers during the pre-licensing, licensing and construction, and operational phases of the PFSF. Representatives to the Board of Managers are chosen by the member utilities. The Board is under the direction of a chairman, who is selected by the Board members. Voting rights of each representative are in proportion to the associated member utility's respective ownership interest in the Company.

The Board of Managers is responsible for:

- Providing the executive functions of the PFSLLC and exercising those functions through a Chairman of the Board and Chief Executive Officer. In the operational phase, the Chairman of the
  Board, along with supporting staff in the Office of the Chairman, will perform the role of supervisor of the General Manager/Chief Operating Officer (Figure 9.1-3).

- Performing the long-range planning necessary to ensure stable resources for the operation of the facility. The Board will ensure that appropriate financial stability is maintained on an operating basis.

- Preparation and submittal of the PFSF License Application, including the Safety Analysis Report, Environmental Report and Emergency Plan; securing inside and/or outside expertise to assist in preparation of the License Application; and development of responses to address requests for additional information from the NRC (pre-licensing phase).

- Ensuring that the Quality Assurance Program is properly established, documented, approved, and effectively implemented by trained personnel with adequate resources, and that the Quality Assurance Committee/staff performs its designated oversight function and reports to the Board on matters affecting quality. The Board will assess the adequacy of the Quality Assurance Program implementation on a regular basis.

- Ensuring compliance with the conditions of the PFSF license, and ensuring that the Safety Review Committee (operational phase) reports to the Board and advises the Board on matters Important-to-Safety.

- Ensuring that decommissioning is properly funded through the escrow account, the letter of credit, and external sinking fund, and that decommissioning funding remains current by means of annual decommissioning funding reviews.

- Ensuring compliance with the terms of the Lease Agreement with the PFSF site host, the Skull Valley Band of Goshute Indians.

- Ensuring that License standards for engineering and design, construction, quality assurance, testing, and operation are met through oversight by the Chairman, utility staff, member utilities, expert consultants reporting directly to the Board, and the Quality Assurance Committee/staff. The Board shall maintain a direct relationship with the Quality Assurance Committee prior to PFSF construction and with the Quality Assurance staff throughout PFSF operation. A Project Director is responsible to the Board for ensuring that all engineering and design tasks, as well as licensing support tasks, are completed on schedule.

9.1.1.2 PFSLLC In-House Organization

PFSLLC organization charts are provided in Figures 9.1-1, 9.1-2, and 9.1-3 for the organizations that will be in place during the pre-licensing, licensing and construction, and operational phases, respectively. The Board of Managers provides management direction and oversight throughout the various phases.

9.1.1.2.1 Pre-licensing Organization

Prior to licensing, the oversight of design and other project work activities rests with the committees of the Board of Managers and utility-provided PFSLLC staff, described in Section 9.1.1.4. The committees reporting to the PFSLLC Board of Managers consist of several functional groups, as outlined in Figure 9.1-1, each with a committee chair. The Committee Chairs work directly with the Chairman of the Board and the PFSLLC Project Director to manage and complete activities in support of the license application. Typical committees are Licensing and Regulatory, Quality Assurance, and Technology. Additional committees may be established as needed. Committees may

be discontinued after their work is completed. The Quality Assurance Committee is responsible for the implementation of the Quality Assurance Program, including the preparation of procedures and maintenance of appropriate records. The Quality Assurance Committee conducts audits to ensure that requirements of the Quality Assurance Program are being met.

9.1.1.2.2 Licensing and Construction Organization

During construction, the PFSLLC will have a team of three persons available for oversight of PFSF design, procurement, and construction. This staff will be led by the PFSLLC Project Director and will include a construction engineer and a procurement specialist. They will ensure oversight of the Architect/Engineer (A/E), contractors, and vendors and will be assisted as needed (at the discretion of the PFSLLC Project Director) by utility staff from the member utilities in a full range of specialties appropriate to the design, construction, start-up, and operation of an independent spent fuel storage installation. These three persons will be available for initial training of the site staff prior to facility operation. Off-site support from the A/E, storage cask vendors, and others will be provided to the PFSF Project Director, as needed.

During construction of the PFSF, the Construction Superintendent will oversee the installation in accordance with quality assurance standards. As shown on Figure 9.1-2, the Construction Superintendent reports to the PFSLLC Project Director, who in turn reports to the Board of Managers. During construction of the PFSF, site administrative and engineering staff will be responsible for the administrative requirements of the site, including the maintenance of records in accordance with conditions of the License. Administrative staff will be responsible for the necessary personnel functions, ensuring that adequate business records and services are contracted for and maintained, and appropriate applicable hiring standards are followed in the selection of staff members. The oversight of construction shall be monitored by the Board of Managers and by the initial staff members, several of whom will be hired in the preconstruction design phase.

The Construction Superintendent will perform the oversight role on a daily basis in addition to the construction General Contractor.

During construction, Quality Assurance will be responsible for ensuring that structures, systems and components (SSCs) Important-to-Safety are designed, procured, fabricated, inspected, and tested in accordance with the Quality Assurance Program and in compliance with applicable codes, standards and requirements, including the maintenance of appropriate records. Quality Assurance will ensure that appropriate steps are added to site operation and maintenance procedures to ensure that all activities are performed and monitored in accordance with the site License.

9.1.1.2.3 Operational Organization

Following construction and prior to operation, the site organization will be managed by a General Manager who reports to the Chairman of the Board. The organization will consist of several functional groups, each with a leader. The leaders will function collectively with the General Manager to constitute the site Operations Review Committee (ORC) which will perform on-site safety assessment and review. All persons employed at the site will be hired and trained in compliance with the site License and Safety Analysis Report and other applicable guidelines.

During the operational phase, the General Manager will function as the Chief Operating Officer, responsible for day-to-day management of all PFSF operations, including canister receipt, handling, storage, and maintenance and surveillance activities. The General Manager/Chief Operating Officer reports directly to the Board of Managers, as shown on Figure 9.1-3. The Safety Review Committee (Section 9.1.2.1.1) advises the Board of Managers on issues Important to Safety and is responsible for reviewing modifications, plans, procedures and other activities that have elements that are Important-to-Safety. The ORC, consisting of the leaders of the various departments, will support the General Manager/Chief Operating Officer (who will serve as Chairman

of the ORC) in the review/assessment of site operations. The ORC will consist of the lead persons from each department as indicated on Figure 9.1-3. A quorum consisting of a majority of ORC members will be required for the ORC to perform its function of operational assessment and safety oversight. Offsite nuclear engineering support during PFSF operations is discussed in Section 9.1.2.1.8.

Storage cask vendors will be inspected by PFSLLC representatives to ensure compliance with the 10 CFR 71 and/or 10 CFR 72 Certificates of Compliance and approved Quality Assurance Programs. Spent fuel shipment preparation at individual nuclear power plant sites will be overseen by the PFSLLC nuclear engineering staff.

9.1.1.3 Interrelationships with Contractors and Suppliers

As shown in Figures 9.1-1 and 9.1-2, the A/E reports to the PFSLLC Project Director, who in turn reports to the Board of Managers, for the pre-licensing, and licensing and construction phases. The PFSLLC Project Director is responsible to the Board for managing technical work activities and ensuring that engineering and design tasks, as well as licensing support tasks, are completed on schedule.

The PFSLLC and its A/E work under a contractual relationship which requires that all appropriate work by the A/E be performed in accordance with the A/E's approved Quality Assurance Program. Any subcontractor's support analysis or design work is required to have an approved Quality Assurance Program or to be directly supervised by the A/E.

The A/E Project Manager reports to the Project Director of the PFSLLC, who is responsible for contractual compliance. The PFSLLC Quality Assurance and Technical Committees/staff review and audit the work of the A/E. These committees consist of staff members from PFSLLC member utilities with specific expertise in the area of oversight. They are appointed by the Chairman of the Board. In addition, routine telephone conferences between the PFSLLC and the A/E are utilized to monitor progress and communicate issues.

During the construction phase of the project, all contractors will report to the Construction Superintendent who is responsible for contractual compliance. In turn, the Construction Superinendent reports to the Project Director who is responsible to the Board for compliance with the design and licensing basis established for the facility.

The entire process of canister and storage cask selection in the pre-license phase of the project will be overseen by staff provided from PFSLLC member utilities. This mechanism will bring close industry scrutiny from a variety of potential users and reinforces the normal quality assurance oversight on this important function. Storage cask vendors are required by the contract with the PFSLLC to perform work under the approved Quality Assurance Program with oversight by the PFSLLC's Quality Assurance and Technical Committees/staff.

Other suppliers contract with the A/E or the PFSLLC directly. All PFSLLC contracts and purchase orders relating to the License are reviewed for quality assurance applicability and standards by a member of the Quality Assurance Committee/staff. Contracts and purchase orders are signed by the Chairman of the Board.

9.1.1.4 Technical Staff

The PFSLLC technical staff is provided by the member utilities. These staff members support the review of activities performed by the A/E and storage cask vendors. They

also provide review for "Requests for Proposal" specifications to ensure transportation, dry transfer equipment, and on-site transfer equipment properly interface with the facilities of the individual nuclear power plant licensees.

Over 50 engineers have been involved in one or more phases of the project. They include nuclear engineers up to the Ph.D. level, several with 20 or more years of industry experience; operations personnel with direct fuel handling experience; and health physics staff with plant experience to the level of Radiation Protection Manager.

Security and mechanical design as well as instrumentation design oversight has been provided by staff at several member utilities. Safety Analysis Report preparation and review were a joint effort between these staff members and the A/E. Resumes of PFSLLC support personnel are on file with the PFSLLC.

9.1.2 Operating Organization, Management, and Administrative Control System

The following section describes the PFSLLC organization during the operational phase of the project.

9.1.2.1 On-Site Organization

Figure 9.1-3 details staff composition and job functions. During the operational phase, the Board of Managers has overall responsibility for safe operation of the PFSF, and the authority to ensure continued safe operation. The General Manager shall also function as the Chief Operating Officer during the operational phase, responsible to the Board of Managers for managing the PFSF in a manner that ensures safe and efficient operations and maintenance activities. The functions represented by the PFSLLC

organization have the authority to control various aspects of the PFSF including engineering and design, quality assurance, fuel accountability, maintenance, radiation protection, training, operations, and decommissioning. This organization will ensure the continued safe operation of the PFSF during all normal, off-normal, and accident conditions.

Staff members in the various departments provide backup for the lead person in their respective department. Each specialty has more than one qualified individual and they are responsible for performing the lead responsibilities during the absence of the principal. The General Manager/Chief Operating Officer shall designate a lead person as a backup during his/her absence and rotate this responsibility among various leads to develop senior capability for site direction. Training will be available to General Plant Workers for the various technical specialties should an opening occur.

9.1.2.1.1 Safety Review Committee

The PFSF Safety Review Committee is responsible for reviewing and advising the Board of Managers on matters relating to the safe storage of spent nuclear fuel. The PFSF Safety Review Committee is totally independent of the Operational Review Committee.

The PFSF Safety Review Committee will be composed of a minimum of a Chairperson and four members. Alternates may be substituted for regular members. The Chairman of the Board of Managers will designate, in writing, the members and alternates for this committee. The PFSF General Manager/Chief Operating Officer shall be the Chairperson of the PFSF Safety Review Committee.

The PFSF Safety Review Committee will collectively have experience and knowledge in the following areas:

1. Spent Nuclear Fuel Handling and Storage

2. Engineering

3. Radiation Protection

4. Quality Assurance

5. Physical Protection and Safeguards Information

The PFSF Safety Review Committee will meet at least once prior to receipt of spent nuclear fuel for storage at the PFSF and at least once prior to transporting the spent fuel off-site. The Committee will also meet at least once annually and at any time deemed necessary by the Chairman of the Board. A quorum will consist of three regular members or duly appointed alternates. At least one member of the quorum will be the Chairperson or the Chairperson's designated alternate.

The PFSF Safety Review Committee will, as a minimum, perform the following functions:

1. Advise the Chairman of the Board on matters related to the safe storage of spent nuclear fuel.

2. Advise the manager of an audited organization and the Chairman of the Board of the results of audits.

3. Recommend to the manager of an audited organization any corrective actions that will assist in the correction of deficiencies.

4. Notify the Chairman of the Board of any safety significant disagreement between the PFSF Safety Review Committee and the PFSF General Manager/Chief Operating Officer within 24 hours.

The PFSF Safety Review Committee will be responsible for the review of:

1. Safety evaluations for procedures and changes thereto, completed under the provisions of 10 CFR 72.48, to verify that such actions do not constitute an unreviewed safety question as defined in 10 CFR 72.48. This review may be completed after implementation of the affected procedure.

2. Changes to Structures, Systems, and Components (SSCs) Important to Safety to verify that such changes do not constitute an unreviewed safety question as defined on 10 CFR 72.48. The review may be completed after implementation of the change.

3. Tests or experiments involving the safe storage of spent nuclear fuel, which are not described in the Safety Analysis Report, to verify such tests or experiments do not constitute an unreviewed safety question as defined in 10 CFR 72.48. This review may be completed after performance of the test or experiment.

4. Proposed changes to the PFSF Technical Specifications or the License.

5. Violations of codes, orders, license requirements, or internal procedures/instructions which are important to the safe storage of spent nuclear fuel.

6. Indications of unanticipated deficiencies in any aspect of design or operation of SSCs that could affect the safe storage of spent nuclear fuel.

7. Significant accidental, unplanned, or uncontrolled radioactive releases, including corrective action to prevent recurrence.

8. Significant operational abnormalities or deviations from normal and expected performance of equipment that affects the safe storage of spent nuclear fuel.

9. The performance of the corrective action system.

10. Internal and external experience information related to the safe storage of spent nuclear fuel that may indicate areas for improving facility safety.

Reports or records of these reviews will be forwarded to the Chairman of the Board within 30 days following completion of the review.

The PFSF Safety Review Committee audit responsibilities will encompass:

1. The conformance of PFSF activities to provisions contained within the PFSF Technical Specifications and applicable license conditions.

2. The training and qualifications of the facility staff.

3. The implementation of the following PFSF plans and programs as required by the PFSF Technical Specifications and SAR:

- Technical Specification Bases Control Program
- Radioactive Effluent Control Program
- Radiation Protection Program
- Onsite Cask Transport Evaluation Program
- Fire Protection Program
- Emergency Plan
- Physical Protection Program
- Quality Assurance Program

4. Actions taken to correct deficiencies occurring in SSCs Important to Safety.

5. Facility operations, modifications, maintenance, and surveillance related to SSCs Important to Safety to verify that these activities are performed in a safe manner.

6. Other activities and documents as requested by the Chairman of the Board.

Reports or records of these audits, including any recommendations, will be forwarded to the Chairman of the Board within 30 days following completion of the audit.

9.1.2.1.2 Mechanical Maintenance / Operations

The mechanical maintenance/operations staff will provide operations coverage for those periods of time in which fuel is being handled and routine site maintenance and surveillance when fuel is not being handled. The Mechanical Maintenance/Operations staff will also provide persons to operate railroad locomotives from the railroad mainline, or heavy haul vehicles from the intermodal transfer point, as needed.

Mechanics will be responsible for the mechanical maintenance of the facility. This will include performance of those maintenance functions required to maintain buildings, fencing, and operate mechanical equipment. When specialists within the area of Mechanical Maintenance are contracted for, it will be the responsibility of the Mechanical Maintenance personnel to oversee their work and ensure that the criteria of quality assurance is met. Mechanical Maintenance shall be responsible for ensuring that the appropriate records as outlined in the Quality Assurance Program or required by procedure are prepared and maintained in their area of responsibility to the standards delineated in the Safety Analysis Report.

9.1.2.1.3 Electrical and Instrument Maintenance

The Electrical and Instrument Maintenance staff will provide operations coverage for those periods of time in which fuel is being handled and routine site maintenance and surveillance when fuel is not being handled. The Electrical and Instrument Maintenance staff may also provide persons to operate railroad locomotives from the railroad mainline, or heavy haul vehicles from the intermodal transfer point, as needed.

Electrical and Instrument Maintenance personnel will be responsible for the electrical and instrument maintenance of the facility, including the performance of those maintenance functions required to maintain site electrical equipment as well as site instrumentation. When specialists within the area of Electrical and Instrument Maintenance are contracted for, it will be the responsibility of the Electrical and Instrument Maintenance personnel to oversee their work and ensure that quality assurance criteria are met. The Electrical and Instrument Maintenance staff shall be responsible for ensuring that appropriate records are maintained in accordance with the standards delineated in the Safety Analysis Report.

9.1.2.1.4 Radiation Protection

Personnel in the Radiation Protection group will be responsible for the functions of radiation safety and industrial safety. Radiation Protection staff will ensure compliance with the conditions of the License and the applicable personnel radiation safeguards such as 10 CFR 20. The Radiation Protection Manager shall be responsible for ensuring that appropriate records are maintained in accordance with the standards delineated in the Safety Analysis Report.

9.1.2.1.5 Security

The site security force will be trained in accordance with 10 CFR 73. The site security force will be responsible to maintain the security of special nuclear materials that are within the physical confines of this site. They will be responsible for initial responses to security intrusions as outlined in the Physical Protection Plan.

The security staff, in addition to their assessment responsibilities, will function to initiate the response to any off-normal site event as outlined in the emergency plan and procedures. The security staff is also responsible for monitoring the storage cask temperature monitoring system and reports alarm conditions to the designated personnel.

9.1.2.1.6 Quality Assurance

The Quality Assurance staff will be responsible for the implementation of the Quality Assurance Program including the maintenance of appropriate records. The Quality Assurance staff will ensure that the appropriate steps are added to site procedures for operation and maintenance to ensure and monitor that all activities are performed in accordance with the site License.

9.1.2.1.7 Site Administrative and Engineering Staff

Site administrative and engineering staff will be responsible for the administrative requirements of the site including the maintenance of records in accordance with the conditions of the License. Administrative staff will be responsible for the necessary

personnel functions ensuring that business records and services are contracted for and maintained and that appropriate hiring standards are followed in the selection of staff members. The site nuclear engineer will be responsible for the oversight of facility modifications as outlined in the Quality Assurance Program and procedures.

9.1.2.1.8 Off-Site Nuclear Engineering Support

The off-site nuclear engineering support for PFSLLC will provide monitoring at each nuclear power plant that ships spent fuel to the site. They will be familiar with applicable procedures of the individual plants and be knowledgeable of the requirements of the PFSF site. The contracting agreements with nuclear power plant licensees permitting shipment of their fuel to the PFSF will contain the necessary authority delegations to PFSF off-site engineers to permit them to have overall control of the PFSLLC property on the licensee's site and to ensure that all fuel is prepared and loaded into sealed canisters in accordance with the conditions of the PFSF License, the Service Agreements, and the shipping/storage cask Certificates of Compliance.

9.1.2.2 Personnel Functions, Responsibilities, and Authorities

The site staffing for the operational phase of the facility is described in the following paragraphs.

9.1.2.2.1 General Manager/Chief Operating Officer

The General Manager/Chief Operating Officer, supported by the facility's administrative and technical staffs, is responsible to the Board of Managers for managing the PFSF to ensure the safe and efficient operation and maintenance of the facility. The General Manager/Chief Operating Officer exercises direct control over all facility activities. This

position has the authority and responsibility for providing staff resources (or contract support, as needed) and management direction to ensure the safe and efficient operation and maintenance of the facility. This position is responsible for document control and storage, training, security and the licensing interface with the NRC. This position is also responsible for the liaison between the PFSLLC and local governments in accordance with the Emergency Plan. The General Manager/Chief Operating Officer reviews proposed facility modifications, procedural changes, and tests, and has the authority to approve them for implementation, unless it is determined that the proposed modifications, changes or tests may involve an unreviewed safety question. The General Manager/Chief Operating Officer provides final approval of procedures for facility operations, maintenance, equipment inspections, administration and security, after all other required approvals have been obtained. The General Manager/Chief Operating Officer ensures that all subordinate or delegated responsibilities, assignments, authorities and relationships are understood and implemented by his/her lead people, engineers, and other staff members. The General Manager/Chief Operating Officer is familiar with all pertinent rules, regulations, codes, and procedures and ensures compliance as applicable.

The General Manager/Chief Operating Officer coordinates the activities of the facility with the Board of Managers and outside support services, and keeps the Board advised of facility performance. All unusual occurrences, incidents, or abnormalities in facility operation are reported to this position. The General Manager/Chief Operating Officer has the authority to shut down the facility operation and initiate emergency procedures or curtail operations in any emergency situation which should arise.

The General Manager/Chief Operating Officer is responsible for the scheduling and procurement of all equipment and materials (including special nuclear and source materials) necessary for the operation of the facility; the development of plans and procedures for facility administration, operation, and maintenance; the selection and hiring of facility personnel; and the development of appropriate training programs to

ensure facility personnel are qualified.

9.1.2.2.2 Radiation Protection Manager

The Radiation Protection Manager is responsible to the General Manager/Chief Operating Officer for radiation safety at the PFSF, including the planning and direction of the facility radiation protection and ALARA programs and procedures, the operation of the health physics laboratory, and the technical and functional supervision of the Radiation Protection Technicians. The Radiation Protection Manager is responsible for all routine and special radiation monitoring for the protection of personnel and ensures that packaging, storage, and shipment of solid radioactive waste complies with applicable regulations. The Radiation Protection Manager advises and informs the General Manager/Chief Operating Officer on all matters pertaining to radiological safety, including the status of radiological health aspects of facility operation and maintenance and identification of potential radiological concerns. The Radiation Protection Manager is responsible for maintaining and monitoring all radiation protection related records for any trends which may affect facility operation.
The Radiation Protection Manager has the authority and responsibility to order cessation of hazardous work involving radiological materials until the General Manager/Chief Operating Officer is appraised of the situation and the appropriate precautions are taken. The Radiation Protection Manager has the authority to initiate and direct facility emergency procedures if required to protect personnel or the general public. The Radiation Protection Manager is also responsible for industrial safety at the PFSF.

9.1.2.2.3 Radiation Protection Technicians

The Radiation Protection Technicians are responsible for the actual monitoring of

THIS PAGE INTENTIONALL LEFT BLANK

radiation and environmental conditions and for performing chemical and radiochemical analyses under the direction of the Radiation Protection Manager. The Radiation Protection Technicians determine and evaluate radiation hazards in relation to prescribed limits and perform constant or intermittent radiation monitoring of work areas as the need arises. The Radiation Protection Technicians develop and recommend control or protective measures and check for compliance with appropriate procedures. The Radiation Protection Technicians perform periodic and special radiation surveys of facility areas and equipment to define existing or potential hazards. The Radiation Protection Technicians also package and store any solid radioactive waste in accordance with applicable regulations. The Radiation Protection Technicians perform periodic calibration of survey and analytical instruments.

The Radiation Protection Technicians immediately advise the Radiation Protection Manager of any abnormal radiological condition which could result in a serious hazard and, in the absence of the Radiation Protection Manager, assume responsibility for radiation monitoring during emergency conditions.

The Radiation Protection Technicians develop and implement personnel monitoring activities including the maintenance of personnel exposure records and environmental survey records. The Radiation Protection Technicians maintain the radiation protection and chemistry logs and perform chemical and radiochemical analyses as required. The Radiation Protection Technicians also perform detailed investigations of instances of abnormal contamination or personnel exposure and report findings and recommendations to the Radiation Protection Manager for corrective action.

9.1.2.2.4 Lead Mechanic/Operator

The Lead Mechanic/Operator is responsible to the General Manager/Chief Operating Officer for the proper maintenance and operation of all facility mechanical equipment

necessary to transport, transfer and store spent fuel canisters, including the shipping, transfer, and storage casks, shipping cask trailers and/or rail cars, and the cranes which handle these equipment items. The Lead Mechanic/Operator directs the maintenance crew in the performance of maintenance and operations involving this equipment, and advises the General Manager/Chief Operating Officer of activities being performed. The Lead Mechanic/Operator reviews maintenance records to ensure that proper procedures are being followed and acts on work requests. This person schedules all non-routine and routine maintenance, subject to the review of the General Manager/Chief Operating Officer. The Lead Mechanic/Operator is responsible for executing a preventative and predictive maintenance program and assuring that personnel in this group comply with established procedures and regulations. This person reviews maintenance logs and records to ensure that maintenance required for safe facility operation is performed in a proper manner. The Lead Mechanic/Operator coordinates mechanical activities with all group leaders and engineers, including coordination with the Radiation Protection Manager to ensure that radiation doses to Mechanics are controlled to levels that are as low as is reasonably achievable (ALARA). The Lead Mechanic/Operator keeps the General Manager/Chief Operating Officer advised of any conditions which require his/her attention or that of higher authority.

9.1.2.2.5 Mechanic

The Mechanics are responsible to the Lead Mechanic/Operator for performing facility maintenance and operations associated with the transport, transfer and storage of spent fuel canisters, including the shipping, transfer, and storage casks, shipping cask trailers and/or rail cars, and the cranes which handle these equipment items. Mechanics are responsible for ensuring that maintenance, operation and radiation protection procedures and regulations are followed. The Mechanics are also responsible for maintaining the equipment and maintenance records.

9.1.2.2.6 Lead Instrument and Electrical Technician

The Lead Instrument and Electrical Technician is responsible to the General Manager/Chief Operating Officer for the proper testing and maintenance of facility instrumentation and electric equipment. This person directs the activities of the Instrument and Electrical Technicians and keeps the General Manager/Chief Operating Officer informed of all matters requiring his/her attention. The Lead Instrument and Electrical Technician reviews maintenance records to ensure that proper procedures are followed and acts on work requests; schedules all non-routine maintenance subject to the General Manager/Chief Operating Officer's approval; is responsible for executing a preventative and routine instrumentation testing and maintenance program and assuring that personnel in this group comply with established procedures and regulations; is responsible for assuring that maintenance logs and records are kept and for reviewing these records to ensure that maintenance required for facility safety is performed in the proper manner; and makes recommendations to the General Manager/Chief Operating Officer with regard to instrument improvements or testing procedure changes to improve facility operation.

9.1.2.2.7 Instrument and Electrical Technicians

The Instrument and Electrical Technicians are responsible to the Lead Instrument and Electrical Technician for the repair, testing, maintenance, and approved modification of: facility instrumentation and controls, motors, lighting, and switchgear. These persons conduct test programs, prepare appropriate check lists, and maintain appropriate records of activities; maintain adequate spare parts inventory and ensure that electronic, pneumatic, and electrical test equipment is functioning properly. The Instrument and Electrical Technicians conduct the routine and preventative maintenance programs in a manner consistent with established maintenance procedures and regulations; and keep the Lead Instrument and Electrical Technician

informed of all matters requiring his/her attention.

9.1.2.2.8 Lead Quality Assurance Technician

The Lead Quality Assurance Technician has direct access to the Board of Managers (as indicated by the dotted line in Figure 9.1-3) on all quality assurance related issues to ensure independence of quality assurance functions and the effective execution of the Quality Assurance Program. The Lead Quality Assurance Technician reports to the General Manager/Chief Operating Officer for administrative direction relative to the implementation and conduct of the Quality Assurance Program. The Quality Assurance Program is designed to meet Title 10 CFR Part 72, Subpart G, Quality Assurance requirements. The Lead Quality Assurance Technician shall be responsible for assuring that an appropriate Quality Assurance Program is established and effectively executed which verifies by procedures such as monitorings, inspections, and audits that activities classified as Important-to-Safety are performed correctly and in compliance with governing procedures, standards, and regulations. This person will be assisted in quality assurance functions by the Quality Assurance Technician and Quality Assurance Auditor, as necessary.

9.1.2.2.9 Quality Assurance Technician and Quality Assurance Auditor

The Quality Assurance Technician and Quality Assurance Auditor shall be responsible to the Lead Quality Assurance Technician in assisting with administration of the Quality Assurance Program.

9.1.2.2.10 Lead Nuclear Engineer

The Lead Nuclear Engineer is the staff technical expert on nuclear engineering and nuclear physics. This person is concerned with the detailed performance of facility systems which affect nuclear safety, including criticality safety, fission product

confinement, decay heat removal from the canisters, and shielding of the canisters. This position reviews all procedural changes and modifications affecting nuclear safety and makes appropriate recommendations to the General Manager/Chief Operating Officer; periodically reviews facility operating data to seek trends which could potentially affect nuclear safety and performs detailed investigations of abnormalities or unusual occurrences related to spent fuel shipping, canister transfer operations, and canister storage; keeps the General Manager/Chief Operating Officer advised of all matters requiring his/her attention or that of higher authority; is responsible for fuel accountability and management; and prepares reports related to the nuclear engineering function.

9.1.2.2.11 Nuclear Engineers

The nuclear engineers ensure compliance with License procedures in the off-site loading of canisters. They are responsible for ensuring that the PFSF "Start Clean / Stay Clean" philosophy is maintained.

9.1.2.2.12 Administrative

The General Manager/Chief Operating Officer is supported by an administrative staff which performs management and clerical services for the facility. Included in this group are the administrative assistant, transportation specialist, secretary, public relations coordinator, and financial/purchasing specialist.

9.1.2.2.13 Security Captain

The Security Captain is responsible to the General Manager/Chief Operating Officer for establishing and maintaining physical security in accordance with the Security Plan approved by the NRC. The Security Captain is responsible for the overall performance of the security force in accordance with the NRC approved Security Force Training and

Qualification Plan and Safeguards Contingency Plan, and for ensuring that the security force meets the requirements of the general criteria for Security Personnel. This position manages, directs, and supervises assigned personnel. The Security Captain is responsible for administration, training, reporting and disciplinary control over assigned personnel. The Security Captain receives applications from prospective employees, screens applications, interviews applicants, administers pre-employment tests, completes the background investigations, and hires new security officers for the PFSF. The Security Captain monitors the completion of all required tasks associated with security alarm systems, communication systems, closed circuit television systems, and entry control systems in accordance with security procedures. This position inspects and evaluates security facilities and equipment to ensure that they are being maintained properly and that all systems are functioning / operating in accordance with approved procedures. The Security Captain oversees the involvement of security personnel in implementing the emergency plan and procedures. The security staff is also responsible for monitoring the storage cask temperature monitoring system and reports alarm conditions to the designated personnel.

9.1.2.2.14 Emergency Preparedness Coordinator

The Emergency Preparedness Coordinator is responsible to the General Manager/Chief Operating Officer for ensuring the PFSF is maintained in a state of readiness for effective emergency response in accordance with the Emergency Plan (EP). This includes responsibility for ensuring the adequacy of EP implementing procedures, that PFSF site personnel are adequately trained in emergency response, that emergency response facilities and equipment are maintained in a state of readiness, and for coordination with offsite agencies and support organizations who may be called upon to provide assistance in the event of an emergency. This position will coordinate drills and exercises, as discussed in the EP, in which individuals demonstrate the ability to perform assigned emergency response functions.

In addition to emergency preparedness, this position is also responsible to the General Manager/Chief Operating Officer for conduct of the overall PFSF site training program, including general orientation training, training on operating/maintenance procedures, and radiological training. The Emergency Preparedness Coordinator is a qualified radiation protection technician, capable of providing backup support to Radiation Protection with radiological monitoring functions on an as-needed basis.

9.1.3 Personnel Qualification Requirements

The staff individual qualification requirements are drafted for the minimum levels. Actual functional resumes will be available once staff is selected during construction in advance of operation under the License.

9.1.3.1 Minimum Qualification Requirements

9.1.3.1.1 General Manager/Chief Operating Officer

At the time of appointment to the active position, the General Manager/Chief Operating Officer shall have ten years of responsible experience within the nuclear power industry. A maximum of four years of the ten years may be fulfilled by academic training on a one-for-one basis. To be acceptable, this academic training shall be in an engineering or scientific field generally associated with the nuclear industry.

The General Manager/Chief Operating Officer shall have a recognized Baccalaureate (Bachelor) or higher degree in an engineering or scientific field generally associated with nuclear power production, fuel storage or radiation protection.

9.1.3.1.2 Radiation Protection Manager

At the time of appointment to the active position, the responsible person shall have a minimum of ten years experience in radiation protection within the nuclear power industry. A maximum of four years of this ten years experience may be fulfilled by related technical or academic training on a one-for-one basis. This person shall have a Bachelor or higher degree in radiation protection or a related field.

9.1.3.1.3 Radiation Protection Technicians

Technicians in responsible positions shall have a minimum of four years of working experience in radiation protection. These personnel should also have a minimum of one year of related technical training.

9.1.3.1.4 Lead Mechanic/Operator

At the time of appointment to the active position, this person shall have a high school diploma or equivalent and a minimum of six years of experience in mechanical maintenance. A Lead Mechanic/Operator will also become a certified storage facility operator prior to facility operation, and a certified welder.

9.1.3.1.5 Mechanics

Mechanics shall hold a high school diploma or equivalent and a minimum of four years experience in mechanical maintenance. All mechanics shall become certified facility operators prior to operating cask handling equipment. PFSF mechanics that operate locomotives shall become licensed locomotive engineers in accordance with 49 U.S.C. Section 20135 and 49 C.F.R. Part 240. Likewise, PFS mechanics that operate locomotives at the intermodal transfer point shall become licensed locomotive engineers, subject to the same provisions.[i] One mechanic must become a certified welder to provide backup for the Lead Mechanic/Operator. Mechanics should possess a high degree of manual dexterity and the ability to learn and apply new skills in maintenance operations as they are developed and incorporated into facility operations.

9.1.3.1.6 Lead Instrument and Electrical Technician

At the time of appointment to the active position this person shall have a high school diploma or equivalent and a minimum of six years of experience in instrumentation and electrical work. This person should possess a two-year associate degree in the instrumentation, control and electrical field.

9.1.3.1.7 Instrument and Electrical Technicians

Technicians shall have a high school diploma or equivalent and a minimum of four years of working experience in this field. They should have minimum of one year of related technical training in addition to their experience. PFSF instrument and electrical technicians that operate locomotives shall become licensed locomotive engineers in

[i] The above commitments regarding PFS mechanics that operate locomotives are made as part of a Settlement between PFS and the State of Utah in the NRC licensing proceeding for the PFSF and, as agreed to by PFS, the State and the NRC Staff, do not constitute a license condition or licensing commitment under the 10 CFR Part 72 license for the PFSF and, as further agreed, their incorporation into the SAR does not render the commitments subject to 10 CFR 72.48, or obligate the NRC Staff to enforce the above requirements, or undertake enforcement action with respect to violation of these requirements, under the 10 CFR Part 72 license for the PFSF.

accordance with 49 U.S.C. Section 20135 and 49 C.F.R. Part 240. Likewise, PFS instrument and electrical technicians that operate locomotives at the intermodal transfer point shall become licensed locomotive engineers, subject to the same provisions.[ii]

9.1.3.1.8 Lead Quality Assurance Technician

This person shall have a high school diploma or equivalent and a minimum of six years experience within the nuclear power industry in a quality assurance position. This person should also have two years technical education in this area.

9.1.3.1.9 Quality Assurance Technician and Quality Assurance Auditor

The Quality Assurance Technicians shall have a high school diploma or equivalent and a minimum of four years experience in the quality assurance field within the nuclear power industry.

9.1.3.1.10 Lead Nuclear Engineer

This person shall have a minimum of a Bachelor degree in nuclear engineering and four years experience in the nuclear power industry.

[ii] The above commitments regarding PFS instrument and electrical technicians that operate locomotives are made as part of a Settlement between PFS and the State of Utah in the NRC licensing proceeding for the PFSF and, as agreed to by PFS, the State and the NRC Staff, do not constitute a license condition or licensing commitment under the 10 CFR Part 72 license for the PFSF and, as further agreed, their incorporation into the SAR does not render the commitments subject to 10 CFR 72.48, or obligate the NRC Staff to enforce the above requirements, or undertake enforcement action with respect to violation of these requirements, under the 10 CFR Part 72 license for the PFSF.

9.1.3.1.11 Nuclear Engineers

This person shall have a Bachelor degree in Nuclear Engineering.

9.1.3.1.12 Security Captain

This person shall be a High School graduate, a qualified weapons instructor (NRA or equivalent), and have received supervisory skills training. Should have 6 years experience in security at least three of which must be at a nuclear facility.

9.1.3.1.13 Emergency Preparedness Coordinator

This person shall have a high school diploma or equivalent and a minimum of two years experience in emergency preparedness. This individual shall also have a minimum of four years of working experience in radiation protection. In addition, this person shall have experience in developing and implementing training plans based on the Systematic Approach to Training (SAT), and in providing training, including conducting emergency preparedness training and drills. Should the initial person in this position not have experience with the SAT, then qualified support will be acquired for the initial training program development using the SAT. Continued program implementation will be transferred to the PFSF staff after the staff is sufficiently familiarized with the SAT process.

9.1.3.2 Personal Qualification Requirements

Each member of the site staff involved with important safety activities will be required to meet the minimum qualifications of the License. Programs for additional site familiarization training and ongoing training and retraining will be maintained to provide a continuously qualified staff. The training program as coordinated by the Emergency Preparedness Coordinator is under the overall direction of the General Manager/Chief

Operating Officer.

9.1.4 Liaison with Outside Organizations

During the pre-licensing phase, most of the outside technical support for the PFSF engineering and licensing was employed through the A/E. Oversight was provided by a nuclear engineer on the Technical Committee. The outside organizations providing technical expertise on site selection were directed by the Project Director; the Chairman of the Board monitored the interface.

The outside organizations supplying the cask storage systems are directed by the Technical Committee and the PFSLLC Project Director. Their review is performed in accordance with the Quality Assurance Program and is audited by the Quality Assurance Committee.

During construction, the outside organization for installation and construction and the A/E are overseen by the PFSLLC Project Director. The system to monitor the design includes Technical Committee review and Quality Assurance Committee audits as well as routine telephone conferences. During the operational phase, the General Manager/Chief Operating Officer shall be responsible for day-to-day contacts with the U.S. Nuclear Regulatory Commission and other regulatory bodies. The authority to hire necessary consulting staff within the guidelines approved by the Board will rest with the General Manager/Chief Operating Officer after consulting the Board Chairman. The acquisition of outside consulting expertise or services will be done in full accordance with the standards outlined in the Quality Assurance Program. All work performed on SSCs that are Important-to-Safety, will be strictly governed by the Quality Assurance Program.

Oversight of the outside organizations which manufacture canisters is provided by the General Manager/Chief Operating Officer and the Nuclear Engineering staff, who will

conduct oversight activities in accordance with the Quality Assurance Program. Fabrication of canisters to appropriate standards and storage, transfer and transportation technology is monitored by the nuclear engineering staff. The oversight of outside organizations is audited periodically by the Quality Assurance staff."

THIS PAGE INTENTIONALLY BLANK

9.2 PREOPERATIONAL TESTING AND OPERATION

Prior to loading the PFSF with spent fuel canisters, preoperational, startup, and performance tests will be developed and implemented. The tests will verify the functional operation of structures, systems and components important to safety, including spent fuel shipping and receipt, canister transfer, onsite transport, and storage operations as well as the performance of the storage system components. The tests will verify that the PFSF shipping, transfer, onsite transport and storage systems operate safely and effectively. The results of the tests will be reported as a supplement to this section during FSAR updating in accordance with 10 CFR 72.70.

9.2.1 Administrative Procedures for Conducting Test Program

Test procedures will be developed for conducting the tests at the PFSF to ensure that structures, systems, and components satisfactorily perform their required functions. These test procedures will further ensure that the PFSF has been properly designed and constructed and is ready to operate in a manner that will not endanger the health and safety of the public.

The test procedures will include the elements in Section 9.4.1.2 and will detail the type of test, the response expected, test acceptance criteria and the validation method for each component or system tested. Review and approval of test procedures by the responsible line manager is required before submission for final approval or ORC review (if required). Procedures involving structures, systems or components important to safety will be reviewed and approved by the site Operations Review Committee (ORC). Revisions necessitated by operational experience, changes to systems or components, new requirements, clerical errors, etc., will be reviewed and approved in the same manner as the original procedure. The test results will be documented by the individuals performing the test and will be reviewed and evaluated by the appropriate

line organization. Test results for structures, systems and components important to safety will be approved by the ORC.

9.2.2 Preoperational Test Plan

The preoperational test plan will ensure that preoperational tests and dry runs are performed on all PFSF operations involving spent fuel prior to operation and that preoperational tests continue to be conducted on new structures, systems, and components that handle spent fuel to verify performance throughout the life of the facility.

The preoperational test plan will ensure that preoperational test procedures address all aspects of the PFSF, construction testing, physical facilities testing and operational testing. The preoperational test plan will clearly define test objectives, methods for accomplishing the objectives, prerequisites for performing the tests, and acceptance criteria used to evaluate test results. The results of preoperational testing will be used to make necessary changes or modifications to equipment and procedures.

Preoperational tests will be performed in accordance with approved procedures, which will be developed and implemented in accordance with the QA Program described in Chapter 11. The QA Program meets the requirements of 10 CFR 72, Subpart G. Thus, the PFSF meets the general design criteria of 10 CFR 72.122(a), as it relates to testing.

9.2.2.1 Construction Testing

Construction testing will verify requirements for configuration, materials, performance, and quality for structures, systems and components important to safety at the PFSF.

THIS PAGE INTENTIONALLY LEFT BLANK

The purpose for construction testing is to ensure that structures constructed at the PFSF meet the requirements of their design, specifications, and code criteria. Construction, materials, operation, or quality that is found not in accordance with the criteria will be referred to the appropriate engineer for resolution, which may include rework, repair, or replacement. Construction testing will be performed on the following:

- Cask storage pad construction,
- Canister transfer building construction, and
- PFSF yard and yard infrastructure construction.

9.2.2.2 Physical Facilities Testing

Spent fuel storage shipping, transfer, transport and security equipment at the PFSF will be functionally tested prior to operation and as required by their applicable codes throughout the life of the facility. The tests will ensure that all equipment that handles spent fuel and all interface systems are working properly as designed and certified.

The purpose for the functional testing of the physical facilities, components, and equipment used at the PFSF is to ensure that they operate properly and will perform as designed in accordance with their perspective licenses, code, and/or vendor criteria. Acceptance criteria and corrective actions for test margins and response times will be specified by the equipment vendors. Components not in compliance will be returned to the vendor for correction or repaired onsite. Correction of components classified as important to safety will be accompanied by documentation identifying resolution of any safety concerns prior to reuse.

The PFSF facilities, components and equipment to be tested and inspected to ensure their proper functioning include:

- Storage system transfer casks,
- Canister downloader equipment,
- Lifting yokes,
- Canister transfer building overhead and bridge cranes and interlocks,
- Storage cask transporter vehicles,
- Heavy haul transport trailers,
- Concrete storage casks,
- Storage cask temperature monitoring equipment,
- Area radiation monitoring equipment,
- Electrical power system,
- Standby diesel generator,
- Security systems equipment,
- Communications systems,
- Fire truck and fire protection equipment

9.2.2.3 Operational Testing

Actual storage system components without fuel will be utilized for preoperational testing prior to PFSF operations. The operational tests will be conducted by appropriate personnel as part of their certification training, and will include full-load testing of all rigging and attachments, and limits of travel on lifting and transfer equipment. These tests will determine the adequacy of plant procedures and estimated worker exposures for ALARA considerations and radiation protection analyses. The results of these tests will be evaluated for potential improvements and alternatives.

The purpose for operational testing is to ensure that the equipment performs as required and that personnel involved in spent fuel shipping, receipt, canister transfer, onsite transport, and storage operations perform their intended tasks in accordance with approved procedures, with ALARA awareness, with efficiency, and without compromising personnel or public safety. This will ensure that canisters containing spent fuel are safely handled and maintained in storage. Failed operational testing will result in repair or replacement of components by their respective vendors and additional training, retraining, or dismissal of personnel. The PFSF operational tests will include:

- Removal of the personnel barrier, impact limiters, and shipping cask from the heavy haul trailer or rail car using the canister transfer overhead bridge crane.
- Uprighting the shipping cask on the shipping cradle and moving the cask from the shipping cradle to the canister transfer building floor using the shipping cask lifting yoke and overhead crane.
- Moving the shipping cask from the cask unloading bay into one of the canister transfer cells using the overhead crane.
- Unbolting the shipping cask lid using automated wrenches and inserting lifting attachments on the canister.
- Setting the transfer cask on top of the shipping cask using the transfer cask lifting yoke and overhead crane.
- Transferring the canister from the shipping cask to the transfer cask using the vendor's canister lifting slings and equipment.
- Moving the transfer cask from the top of the shipping cask to the top of the concrete storage cask using the overhead crane.
- Transferring the canister from the transfer cask into the storage cask using the vendor's canister lifting slings and equipment.
- Ensuring that all steps throughout the transfer process are performed in an ALARA manner to minimize radiation doses, as identified in Chapter 7.

- Transporting the storage cask from the canister transfer building cell to the storage pads and back again using both the cask transporter vehicle and a combination of the overhead crane and cask transporter.
- Transferring the canister from the storage cask back to the shipping cask using the overhead crane as required when shipping fuel offsite.

9.2.3 Operational Readiness Review Plan

An operational readiness review (ORR) will be performed by the PFSF staff prior to operations in order to verify the readiness of the PFSF to begin the shipping, receipt, canister transfer, onsite transport, and storage of spent fuel. The ORR will consist of a programmatic and procedure review, a hardware and staffing review, and a performance assessment of operators, equipment, support staff, and management. The ORR will be conducted in the following major areas:

- Engineering and Technical Support - Onsite technical staff available, design control procedures written and approved, vendor information and manuals available, calculations verified and completed, and drawings as-built and available.
- Licensing - Confirmation of license condition conformance.
- Construction - Construction activities complete as required, drawings entered into document control system, open items resolved, non-conformances corrected, acceptance construction tests completed and approved, and inspections performed and accepted.
- Operations - Operating, off-normal, surveillance, and emergency response procedures written, approved and operationally tested, procedures entered

into document control system, no personnel concerns outstanding, operator aids posted, preoperational testing completed, equipment functional and calibrated.

- Training - Training procedures written and approved, all personnel trained to procedures as required, and training material revised to latest PFSF procedures and drawings.
- Radiological Controls - Radiation protection procedures written and approved, health physics personnel trained, radiation postings completed, and radiological monitoring equipment tested and operational.
- Security Controls - Security procedures written and approved, security personnel trained, security equipment tested and operational, and security drills to detect and assess intrusion performed.
- Maintenance and Surveillance - Maintenance and surveillance procedures written and approved, spare parts itentified and available on site, post-maintenance testing completed as required, surveillance inspections and testing completed or ready as required, and startup test plan actions completed.
- Organization and Management - Procedures affecting organization and management are written and approved, management available, fitness for duty requirements completed, staffing adequate, personnel trained and qualified, and security program and personnel in place.
- Fire Protection - Fire protection procedures written and approved, fire detection systems tested and operational, fire protection systems tested and operational including fire truck, fire pumps, and sprinkler systems, fire personnel trained and available, and fire drills performed and determined acceptable.

- Nuclear Safety - There exist no unresolved safety questions regarding the facility or facility operation. All criticality controls and fuel accountability

controls will be approved and distributed in an appropriate procedural form. All procedures for the loading of fuel into canisters at the originating power plants will be ready and approved by the steps prescribed in the Quality Assurance Program."

The ORR team will consist of a team leader and safety and technical experts representing the areas of operations, engineering and technical support, maintenance and surveillance, and organization and management. The ORR team is expected to conduct internal meetings with the applicable organizations as required to ensure that all activites reviewed in the ORR are accomplished prior to operation. The ORR team will prepare and issue a report addressing the scope of the ORR and all conclusions, findings, and observations of each review item. The report will be signed off by the ORR Team Leader, PFSF General Manager, and other appropriate managers and made available to the NRC.

9.2.4 Operating Startup Plan

An operating startup plan will be initiated to prepare and implement procedures necessary for the initial arrival of spent fuel and operations to transfer the fuel to storage. The plan will identify specific actions unique to the initial spent fuel loading. The operating startup plan will include tests and reviews of the operating procedures, radiation exposure times and received doses, measured radiation levels of the casks and shielding methods, verification of heat removing features in accordance with the technical specifications, and notification to the NRC of the first loaded cask placed in storage.

The operating startup plan will be implemented for the initial loading of the storage system. Upon completion of the plan, procedures, actions, and equipment will be evaluated for improved operations of subsequent spent fuel shipments.

THIS PAGE INTENTIONALLY LEFT BLANK

9.3 TRAINING PROGRAM

The purpose of the training program is to provide the training necessary to ensure the safe, reliable, and cost effective operation of the storage site and to protect the health and safety of site personnel and the general public.

9.3.1 Program Description

The program for training PFSF personnel in their respective duties will follow the "Systematic Approach to Training" (SAT) which is a well defined process for the training of nuclear plant operators under 10 CFR 55.4. The PFSF training program will be developed using the five elements of the SAT as defined in 10 CFR 55.4 ("systems approach to training"). The program will be based upon analysis of the job performance requirements to establish the knowledge level and skills that are required for each position. Explicit learning objectives and performance measures will be generated from this analysis. Training plans will then be developed which identify training settings, sequences, and materials required. The training program will be implemented by conducting the training activities, documenting the training and evaluating the program's effectiveness.

Job descriptions will detail the training, education, and experience requirements for each position. An individual assessment of the employee's needs will be conducted relative to the identified training requirements for each of the respective positions. Training will consist of classroom and on-the job training (OJT), as appropriate, for all individuals, commensurate with their job duties and responsibilities. Training will be structured to meet specific needs of various management and support groups.

It is the intent to hire individuals with the training, education and experience which enable them to perform the assigned tasks, and to provide additional training, as appropriate. There will be an adequate complement of trained and certified personnel

prior to the receipt of spent fuel for storage, and throughout the period of the NRC operating license.

The training program depends on a constant evaluation of the job or task to be performed, the work environment, and the training provided, to determine whether the program is effective in producing and maintaining competent employees. Data from these evaluations are used to identify and correct deficiencies and to accommodate changing needs. Additionally, the effectiveness of the training, and the training program will be evaluated by reviewing written test performances, performance on walk through evaluations, on-the-job training, and feedback from trainees, supervisors, and instructors.

The training program will consist of initial training and continuing or refresher training at a frequency of not less than every two years. The training program will be implemented prior to the receipt of spent fuel at the PFSF and during the life of the facility, until termination of the NRC license.

9.3.2 Initial Training

Initial training will consist of general employee training (GET) and job-specific training to provide individuals with the skill and knowledge required to perform their particular duties and responsibilities. For example, PFS mechanics that operate locomotives will become licensed locomotive engineers, and therefore this training will need to be completed prior to operating the locomotives.

9.3.2.1 General Employee Training (GET)

The following topics will be addressed in GET:

- Facility operations and design,
- Instrumentation and controls,
- Emergency Plan and Procedures,
- Security Plan and Procedures,
- Radiation Control Procedures and Practices, including: The nature and sources of radiation and contamination, interactions of radiation with matter, biological effects of radiation, methods of detecting and controlling radiation and contamination, ALARA concepts, facility access and visitor controls, decontamination procedures, use of monitoring and personal protective equipment, regulatory and administrative exposure and contamination limits, and site specific hazards,
- Environmental Protection,
- Quality Assurance,
- Administrative Procedures,
- Normal and Off-Normal Procedures,
- Safety, and
- General Fire Protection.

9.3.2.2 Job Specific and Certification Training

Individuals who operate equipment and controls that have been identified as "important to safety" in the Safety Analysis Report and in the NRC license must be trained and certified. Supervisory personnel who direct the operation of equipment and controls that are "important to safety" must also be certified. These individuals shall be certified

as specified in their respective job descriptions. The Operator Training Program will address the following:

- Canister transfer system design and operations,
- Canister transfer system normal and off-normal procedures,
- Storage facility normal and off-normal procedures,
- Normal and off-normal transportation procedures for on-site transportation package positioning prior to lifting of the shipping cask from the transport vehicle,
- Maintenance,
- Storage cask temperature monitoring system,
- Radiation detection, monitoring, sampling and survey instruments,
- Facility layout and functions,
- Operator responsibility and authority,
- Technical Specifications,
- Normal and emergency communications,
- Transportation,
- Topics covered in General Employee Training (GET), addressed with specific emphasis on operations.

Other tasks that will be unique to this facility may require special training prior to performing them. Some of this training may have to be contracted, either on site or at a vendor's facility.

During the implementation of the PFS training program, course descriptions and outlines will be written and derived by following the "Systematic Approach to Training" (SAT), that will provide detailed information related to initial familiarization, certification and qualification, and continuing training for all PFSF technical disciplines.

Whenever additional or job-specific training is required, the SAT shall be used to develop the necessary training materials. Exceptions to the use of the SAT method shall be approved on a case-by-case basis by the emergency preparedness coordinator. Training materials will be developed by the site personnel qualified on those particular tasks. Training will also be delivered by individuals qualified on the particular tasks, or by appropriate contractors.

For equipment and controls that have been identified as important to safety, a designated check-off list of the required training will be prepared along with the operating procedures. Personnel operating or supervising the operation of equipment or controls important to safety will be certified in such operation. The method of certification will be by an approved training and requalification program maintained by the facility. The prerequisites for procedures effecting equipment and controls important to safety will state specifically that the person performing the procedure must hold the applicable certification.

The training program will be developed using a job and task analysis to define the various functions which must be performed by different staff members. Each prescribed task will be covered in a training module which will be presented by a person who is qualified to perform the procedure or to train persons on the procedure. The person performing the training will follow a defined curricula which will outline the steps that are required to perform the task. The procedures to be used in performing the task will be used as a basis of the training curricula, so that persons being trained to perform a task (particularly those which are important to safety) will be trained in the precise manner and steps used in performing the task. At the conclusion of task training, proficiency testing will be administered to ensure that proper understanding has been achieved by the person being trained. A test will be prepared and graded by the instructor and will be retained in the facility records for a two year period.
The certification of personnel in functional areas such as fuel handling will be documented in a personnel training file, which will include an outline of the tasks they

are authorized to perform, the date training was provided, the person providing the training, and a certification indicating that a suitable proficiency test was passed. Retraining and refresher training will be provided at intervals that are appropriate to the specific task. Retraining will involve a review of the basic tasks plus special attention to those items within the task which have undergone change. When new equipment is added or modifications in existing equipment of a significant nature are made, procedures will be modified and retraining on the revised procedure and equipment by a qualified instructor will be provided to those persons already certified prior to operation of that equipment.

The methods for evaluating certified individuals mastery of the training objectives shall be written exams, oral exams or walk-through exercises. The individual must score greater than or equal to 80% overall to pass. Certified individuals shall also be expected to know the "immediate actions" for each "emergency procedure." If the individual fails two subsequent exams for final certification or re-certification, an evaluation shall be performed as to whether the individual will remain in the training program or a re-certification process.

Data collected from test results, job performance results, instructor and trainee critiques will be evaluated and necessary adjustments made to ensure program effectiveness.

9.3.3 Continuing Training

All site personnel will receive GET retraining at a frequency of not more than every two years. The topics selected for GET retraining will include, at a minimum, the subjects covered in initial GET, which appear in Section 9.3.2. Continuing training will be based on the SAT approach to training, discussed above.

Job Specific and Certification retraining will be provided at a frequency of not more than every two years. Topics for this continuing training may be selected from initial training,

NRC bulletins and information notices, major equipment and procedure changes, relevant industry events, and topics designed by the General Manager or requested by other site personnel. All facility processes that could affect the training program should be monitored and analyzed for impact, and the training program adjusted accordingly.

9.3.4 Administration and Records

The Emergency Preparedness Coordinator is responsible for the administration of the training program and for maintaining the training records. The Emergency Preparedness Coordinator will be the primary instructor for GET, and will ensure appropriate, qualified instructors from on site or contracted training services conduct all training activities.

Training records include: dates and hours of training received, outline of subjects (i.e., lesson plan), job performance statements, copies of written examinations, information pertaining to walk-through examinations, practical factors and OJT completed, and re-testing information. Training records will be maintained during the period of an individual's employment and for two years thereafter.

THIS PAGE INTENTIONALLY BLANK

9.4 NORMAL OPERATIONS

9.4.1 Procedures

Operations important to safety will be conducted at the PFSF in accordance with detailed written and approved procedures. All pre-operational, normal operating, maintenance, testing, surveillance and emergency procedures will be in effect prior to operation of the PFSF. These procedures and changes thereto will be reviewed and approved by the Health Physics amd Quality Assurance organizations, independent of the operating function. Procedures will contain sufficient detail to allow qualified and trained personnel to perform the actions without incident or abnormal event.

9.4.1.1 Categories Of Procedures

9.4.1.1.1 Administrative Procedures

Administrative procedures will provide rules and instructions to all PFSF personnel to provide a clear understanding of operating philosophy and management policies. These procedures will include instructions pertaining to personnel conduct and procedures to develop, review, change and approve the other facility procedures. Administrative procedures include activities to ensure that personnel safety, the working environment, procurement, and other general activities of the facility are carried on at a high degree of readiness, quality and success.

Medical evaluations will be conducted on PFSF staff members who are certified for operations important to safety. NRC Form 396 will be used for the performance of the physical examination and guidance contained in ANSI/ANS 3.4-1983 or later will be followed to certify that the individual's fitness and the applicant's physical condition and

general health are such that they might not cause operational errors endangering public health and safety.

The program to ensure the certification of the physical condition and general health of personnel who will operate equipment controls important to safety will require all staff members designated as operators of equipment or controls important to safety to have a physical examination by a licensed physician every two years in accordance with NRC Form 396. Observation of continued fitness-for-duty will be controlled by procedures and training of staff personnel. These procedures and training will include the information necessary to ensure that staff reporting for the performance of work which involves the operation of equipment or controls identified as important for safety are capable of performing such duties without impairment. The procedures and training will include the authority for any trained staff member to deny the right of a person to operate equipment or controls important to safety should they fail to meet the standards of fitness-for-duty. Permanent conditions of staff members that could cause impaired judgment or motor coordination will be considered for accommodation by the physician performing the physical examination using NRC Form 396. Temporary conditions causing impaired judgment or motor coordination will be considered in the procedures as a possible cause for restricted performance of these duties if, in the opinion of trained personnel, further evaluation by a physician is required.

9.4.1.1.2 Radiation Protection Procedures

Radiation protection procedures are used to implement the radiation control program. Radiation protection procedures will assure compliance with 10 CFR 20 and ALARA principles. The radiation protection procedures will describe the acquisition of data, use of equipment, and qualifications and training of personnel to perform radiation surveys,

measurements, and evaluations for the assessment and control of radiation hazards associated with the PFSF.

Entrance to and work performed inside the PFSF restricted area will require a radiation work permit and will be reviewed and controlled by radiation protection personnel. Existing radiation protection procedures from the utilities utilizing the PFSF will be used in developing PFSF specific procedures. The radiation protection procedures will ensure safety of personnel and operations at the PFSF.

The operation and use of radiation monitoring instrumentation at the PFSF, including area monitors, personnel monitoring equipment, air sampling, and measurement and sampling techniques will be described in written procedures.

9.4.1.1.3 Maintenance and Surveillance Procedures

Procedures will be established for performing preventative and corrective maintenance and for surveillance of PFSF equipment and instrumentation. Preventative maintenance and surveillance, including calibrations, will be performed on a periodic basis to preclude the degradation of PFSF systems, equipment, and components.

THIS PAGE INTENTIONALLY BLANK

Corrective maintenance will be performed to rectify any unexpected system, equipment, or component malfunction, and will be initiated as the need arises.

Procedures will describe the expertise or training required to perform tasks important to safety, special equipment needed, and operational controls. Any projected radiation exposure will be identified, along with the ALARA principles to be applied to minimize such exposure.

9.4.1.1.4 Operating Procedures

The operating procedures will provide instructions for all routine and projected contingency (off-normal) operations, including handling, loading, transporting, and storing of spent fuel, and for all other operations important to safety. Operating procedures will include chemical safety, off-normal occurrences, operation of the cask temperature monitoring system and all operations identified in the technical specifications. The requirements for certification of personnel operating equipment and controls important to safety will be specified in the operating procedures.

9.4.1.1.5 Quality Assurance Procedures

Quality assurance procedures will prescribe the necessary elements of quality oversight to ensure activities important to safety are conducted in a controlled manner, in accordance with 10 CFR 72.122 (a) and all applicable regulations, the PFSF license and technical specifications, the radiation protection program, and approved procedures. The quality assurance procedures will clearly communicate that the responsibility for quality rests with each individual, employee or visitor, who enters the facility.

9.4.1.2 Procedure Preparation

Procedures will be generated for all activities important to safety, and will include the following format and depth of coverage:

- Purpose and role in broader scope function
- Personnel required per shift by staff position and general function (e.g., function performance, QA, radiation monitoring)
- Continuous or single (or double) shift operation
- Prerequisites for readiness, such as
  - calibrations to be performed or checked
  - instrumentation to be on hand
  - tools and special equipment to be on hand
  - notifications (with lead times)
  - check/set equipment controls (e.g., physical travel limits for overhead crane)
  - check environmental or other monitors for acceptable range
  - identification of subject(s) of function (e.g., canister to be transferred, cask to be retrieved)
  - log and forms to be completed on hand
  - preceding function
- Series of operations, including results, projected times, projected instrument and gauge readings, controls to be used in performance (e.g., torque, time at pressure, and threshold limits requiring contingency actions (such as hold, initiating a contingency sequence, notification))
- Records to be completed during operation and distribution
- Record and notification upon Completion
- Identification of following function

9.4.1.3 Training On Procedures

All personnel involved in activities important to safety will be trained on the associated procedures prior to conducting the activity. Formal training of personnel on facility procedures will be substantially complete prior to the receipt of radioactive materials at the PFSF. Personnel performing activities important to safety will be certified to perform such functions and will undergo refresher training and testing a minimum of every two years.

9.4.2 Records

9.4.2.1 Records Management System

Records relating to the historical operation of the facility will be maintained by the Administrative organization, under the responsibility of the Administrative Assistant. Records will be stored in the Administration Building, with copies of records required to be maintained in duplicate, as noted below, maintained in the Security and Health Physics Building. Unless otherwise noted, records will be maintained until termination of the facility license by the NRC.

9.4.2.2 Records To Be Maintained

The following PFSF records will be maintained in accordance with procedures developed specifically for the PFSF. The regulatory reference for each category of records is provided in parentheses.

1. Radiation protection program and survey records(10 CFR 20.2101 to 20.2110);

2. Records associated with reporting of defects and noncompliance (10 CFR 21.51);
3. Records important to decommissioning (10 CFR 72.30(d)), consisting of:
   - Records of spills or off-normal occurrences involving the spread of contamination,
   - As-built drawings and modifications of structures and equipment involved in the use and/or storage of radioactive materials, and locations of possible inaccessible contamination,
   - A document, which is updated a minimum of every 2 years, containing a list of all areas designated at any time as restricted areas as defined in 10 CFR 20.1003, and a list of all areas outside of restricted areas involved in a spread of contamination,
   - Records of decommissioning cost estimates and the funding method used.
4. Records of changes to the physical security plan made without prior NRC approval, which must be maintained for a period of three years from the date of the change (10 CFR 72.44(e) and 72.186(b));
5. Records of changes, tests and experiments, and of changes to procedures described in the SAR (10 CFR 72.48(b)(1));
6. Records showing the receipt, inventory, location, disposal, acquisition and transfer of all spent fuel (10 CFR 72.72(a)), which must be maintained in duplicate as long as the spent fuel is stored at the PFSF and for five years after it is removed or transferred from the PFSF;
7. A copy of the current inventory of all spent fuel in storage at the PFSF (10 CFR 72.72(b), which must be kept in duplicate;
8. A copy of the current material control and accounting procedures (10 CFR 72.72(c));

9. Other records required by license conditions or by NRC rules, regulations or orders (10 CFR 72.80);
10. Records of the occurrence and severity of important natural phenomena that affect the PFSF design must be retained until the license is issued (10 CFR 72.92(b));
11. Quality assurance records, including records pertaining to the design, fabrication, erection, testing, maintenance and use of structures, systems and components important to safety, and results of reviews, inspections, tests, audits, monitoring of work performance, and material analyses (10 CFR 72.174);
12. A copy of the current physical security plan, plus any superseded portions of the plan, which must be maintained for three years after a change is made (10 CFR 72.180);
13. A copy of the current safeguards contingency plan procedures, plus any superseded portions of the procedures, which must be maintained for three years after a change is made (10 CFR 72.184);
14. Operating records, including maintenance, alterations or additions made;
15. Records of off-normal occurrences and events;
16. Environmental survey records;
17. Records of employee qualifications and certifications, including NRC Form 396 physical examinations" as required for those PFSF staff members who are certified for operations important to safety;
18. Record copies of:
    - SAR and updates,
    - Reports of accidental criticality or loss of special nuclear material,
    - Material status reports,
    - Nuclear material transfer reports,
    - Reports of pre-operational test acceptance criteria and results,

- Procedures,
- Environmental Report, and
- Emergency Plan.

19. Construction Records

9.5 EMERGENCY PLANNING

An Emergency Plan (EP) has been prepared for the PFSF with an outline and content that complies with the requirements of 10 CFR 72.32(a). The PFSF EP applies specifically to emergencies that could occur at the site.

All accidents and off-normal events evaluated in Chapter 8 of this SAR were considered in the planning basis for development of the PFSF EP. The planning basis includes credible events as well as hypothetical accidents whose occurrence is not considered credible, so as not to limit the scope of emergency planning. Evaluation of the consequences of credible and hypothetical accidents postulated to occur at the PFSF determined that releases of radioactivity would not require response by an off-site organization to protect persons beyond the boundary of the PFSF owner-controlled area. There is a single emergency classification level for events at the PFSF, the Alert classification, which is based on the worst case consequences of potential accidents which are postulated to occur at the PFSF.

Should an off-normal event or accident occur, the PFSF EP requires personnel stationed at the PFSF to notify appropriate emergency response personnel. The emergency response personnel are then responsible for classifying the event in accordance with classification procedures in the PFSF EP and notifying the NRC and local authorities, as stated in the PFSF EP. The emergency response personnel are also responsible for calling out personnel, as necessary, who assemble at the PFSF site to take actions to mitigate the consequences of the emergency, assess radiation and radioactivity levels in the vicinity of the PFSF, and return the PFSF to a safe and stable condition. The design of the PFSF provides for accessibility to equipment on-site and availability of off-site emergency facilities and services in accordance with 10 CFR 72.122(g). The Administration Building at the southeast corner of the PFSF site serves

as the emergency response facility, from which emergency response actions are coordinated.

As detailed in the EP, should an emergency event occur, the General Manager (during normal working hours) or the Security Sergeant (at all other times) assumes the position of Emergency Response Leader. The Emergency Response Leader assumes responsibilities for declaring an Alert, as appropriate, and activation of the Emergency Response Organization (ERO), as well as communicating with on-site emergency response personnel and appraising them of the situation at the PFSF. The EP identifies responsibilities and staffing of the on-site ERO and for requesting off-site assistance. Members of the PFSF ERO will be trained on how to respond to various emergencies at the site, as established in the EP.

In order to expedite response to a fire, a fire pumper truck is stationed at the PFSF site, and members of the on-site fire brigade are trained in its operation. An additional fire truck is presently located at the Goshute Skull Valley Reservation. An ambulance is also located at the PFSF to expedite the transport of any seriously injured individuals.

Off-site assistance may be requested as necessary from the Tooele Regional Medical Center, Tooele County Fire Department, and Tooele County Sheriff, all of which are located in Tooele, Utah. Other off-site assistance may be requested from industry or the NRC, as specified in the EP.

The Tooele County Emergency Operations Plan was consulted in the development of the PFSF EP, and meetings were held with PFSF personnel and Tooele County officials responsible for emergency response operations to discuss accidents that could possibly occur at the PFSF and gain input in the development of the PFSF EP. The EP

was submitted to Tooele County officials for their review and comment in accordance with 10 CFR 72.32(a)(14). Comments were received from the Tooele County, Utah, Department of Emergency Management in a letter dated June 3, 1997, a copy of which, as well as the letter documenting the response to the comments, are included as an attachment to the Emergency Plan.

The EP does not cover actions to be taken for security related events at the PFSF (though it does provide guidance for classifying such events). These actions will be governed by the PFSF Security Plan.

THIS PAGE INTENTIONALLY BLANK

9.6 DECOMMISSIONING PLAN

9.6.1 PFSF Decommissioning Plan

Prior to the end of the PFSF life, canisters loaded with spent fuel will be transferred from storage casks into shipping casks and transported off site. Since the canisters are designed to meet DOE guidance applicable to multi-purpose canisters for storage, transport and disposal of spent fuel, the fuel assemblies will remain sealed in the canisters such that decontamination of the canisters is not required. Following shipment of the canisters off site, the PFSF will be decommissioned by identification and removal of any residual radioactive material, and performance of a final radiological survey. Additional details on decommissioning are found in License Application Appendix B, Preliminary Decommissioning Plan."

9.6.2 Cost of Decommissioning and Funding Method

10 CFR 72.30(b) requires that the proposed decommissioning plan include a decommissioning cost estimate, a funding plan, and method of assuring the availability of decommissioning funds.

The cost of decommissioning the PFSF facilities and site, excluding the storage casks, is estimated to be $1,631,000. The cost of decommissioning the storage casks is estimated to be $17,000 each. Decommissioning of the PFSF facilities and site will be funded by a letter of credit coupled with an external sinking fund. Decommissioning of the storage casks will be funded by prepayment of $17,000 into an externalized escrow account for each cask to be utilized.

9.6.3 Decommissioning Facilitation

The design features of the dry cask storage concept, to be utilized at the PFSF, provide for the inherent ease and simplicity of decommissioning the facility in conformance with 10 CFR 72.130. Details on these design features and measures that will be taken to both minimize the potential for contamination and facilitate any decontamination efforts which may be required are found in License Application Appendix B, "Preliminary Decommissioning Plan."

9.6.4 Recordkeeping for Decommissioning

Records important to decommissioning, as required by 10 CFR 72.30(d), will be maintained until the PFSF is released for unrestricted use. See Section 9.4.2 for the type of records that will be maintained for the PFSF. These records will be maintained in a secure storage area.

9.7 PHYSICAL SECURITY AND SAFEGUARDS CONTINGENCY PLANS

The purpose of the PFSF Security Program is to establish and maintain physical security capabilities for protecting spent fuel at the PFSF. This Program meets the requirements contained in 10 CFR 72, Subpart H, "Physical Protection," and applicable portions of 10 CFR 73.

The PFSF Security Program is described in the following PFSF documents:

- Security Plan, to include physical protection designs,
- Guard Training & Qualification (T&Q) Plan, and
- Safeguards Contingency Plan.

The Security and Contingency plans are classified as safeguards information and are therefore controlled, and withheld from public disclosure in accordance with 10 CFR 73.21. The T&Q plan is classified under 10 CFR 2.790(d) and as such is also withheld from public disclosure. These plans will be submitted for NRC review under separate cover. A summary description of the PFSF physical protection measures that does not include safeguards information follows.

The Security Force controls access to the PFSF Restricted Area (RA). Access to the PFSF is limited to individuals who require access to perform work related activities. The PFSF Security Force maintains a list of approved individuals authorized unescorted access. Individuals granted access to the PFSF RA are badged to indicate whether access is granted with or without escort. Authorized individuals are required to display issued identification dedicated solely for access to the PFSF. An escort is not required for these individuals. All other personnel are considered visitors, and must sign in on a visitor log before entering the PFSF RA. The log documents the visitor's name, date, time, purpose of visit, employment affiliation, citizenship and name of escort. Visitors

are issued display badges that indicate an escort is required. Authorization for access to the PFSF is also contingent upon the individual's meeting PFSF prescribed radiation protection briefings or training. Personnel, hand-carried articles and vehicles that enter the PFSF RA are searched to detect the presence of firearms, explosive and incendiary devices.

The PFSF RA perimeter has an intrusion detection system to immediately detect unauthorized entry, including penetration by stealth. This system is protected against circumvention and tampering. Staffed alarm stations support the Security Program by monitoring perimeter alarms, coordinating security communications and performing closed circuit television surveillance and alarm assessment. Detailed descriptions and capabilities of the PFSF physical protection systems are contained in the PFSF Security Plan.

In accordance with 10 CFR 72.184, the PFSF Safeguards Contingency Plan addresses security responses to a spectrum of threats. For planning purposes, these threats include generic and postulated, site specific contingencies, to include attempted radiological sabotage. Contingency event categories include: (1) Loss of Security Effectiveness, (2) Threats, and (3) Adversary Actions. The Safeguards Contingency Plan provides a Responsibility Matrix that details specific Security Force actions for neutralizing each contingency event. PFSF Security contingency planning involves detailed response procedures, and assistance from local law enforcement, when requested.

As stipulated in Appendix B to 10 CFR 73.55, provisions for training and qualifying Security Force members are contained in the PFSF Guard Training and Qualification (T&Q) Plan. The T&Q Plan identifies all crucial security tasks and the associated Security Force positions that must be trained and qualified in the respective crucial task. In addition to initial and recurring Security Force training requirements, the T&Q Plan

also describes a screening program to determine if the Security Force member's background and physical/mental qualifications meet criteria defined in this plan.

Each commitment made in the Security, T&Q, and Contingency Plans are implemented by written procedures. The regulatory basis for implementing procedures is 10 CFR 73.55(b)(3)(i). Implementing procedures, which are developed, approved and maintained by PFSF Security management, ensure accurate and organized day-to-day security operations.

THIS PAGE INTENTIONALLY BLANK

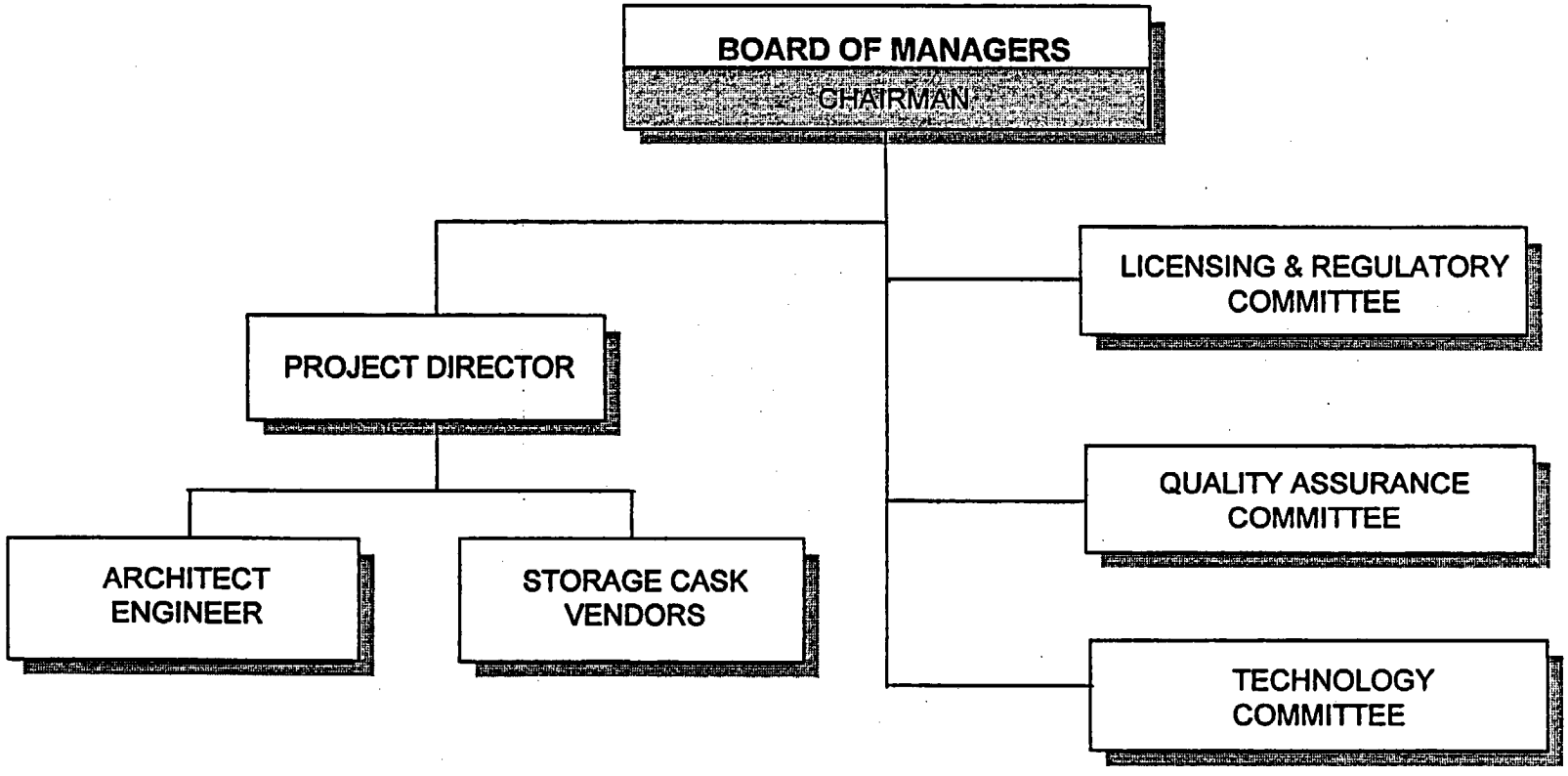

Figure 9.1-1

PRE-LICENSING ORGANIZATION

PRIVATE FUEL STORAGE FACILITY
SAFETY ANALYSIS REPORT

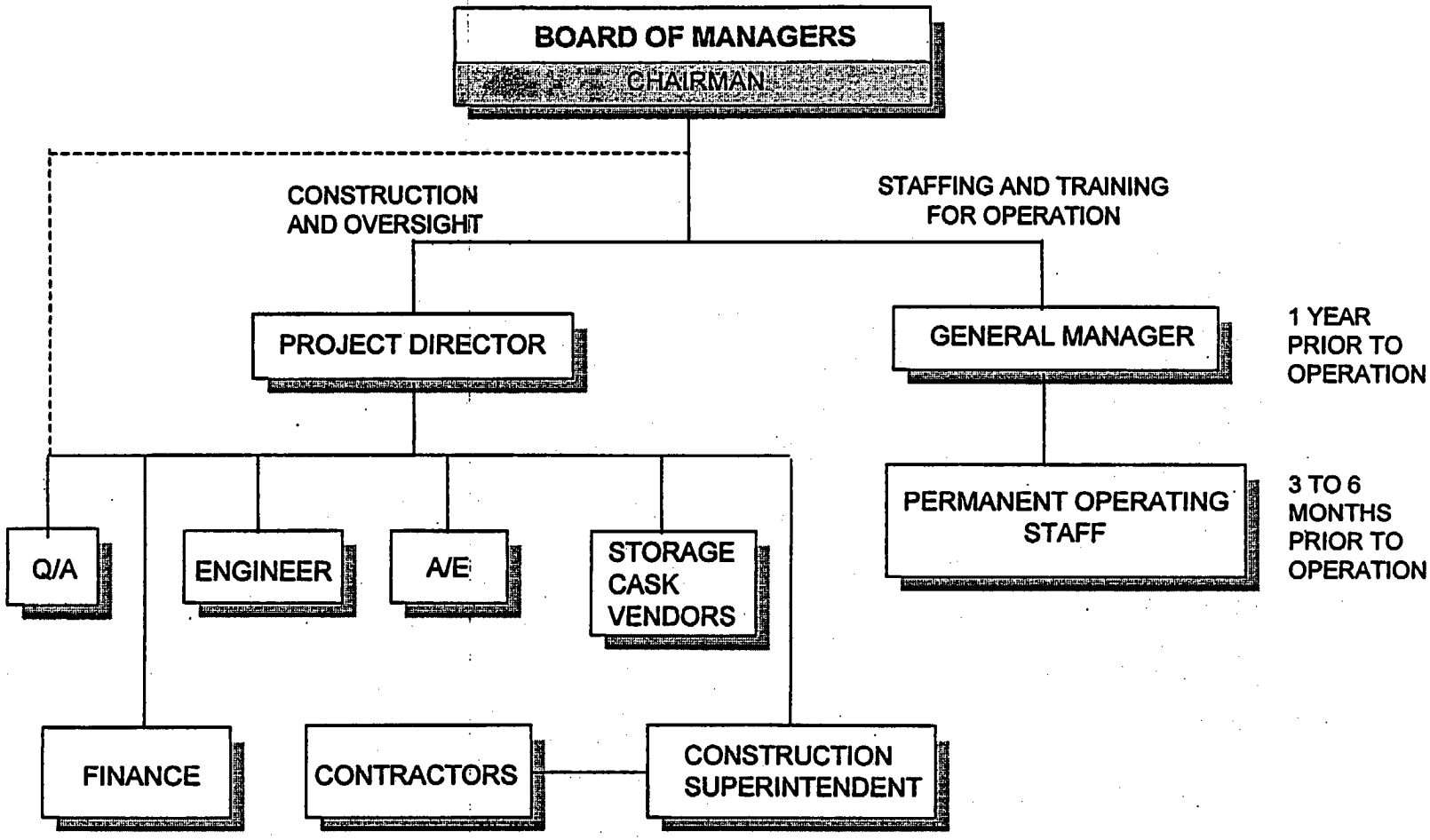

Figure 9.1-2

LICENSING AND CONSTRUCTION ORGANIZATION

PRIVATE FUEL STORAGE FACILITY
SAFETY ANALYSIS REPORT

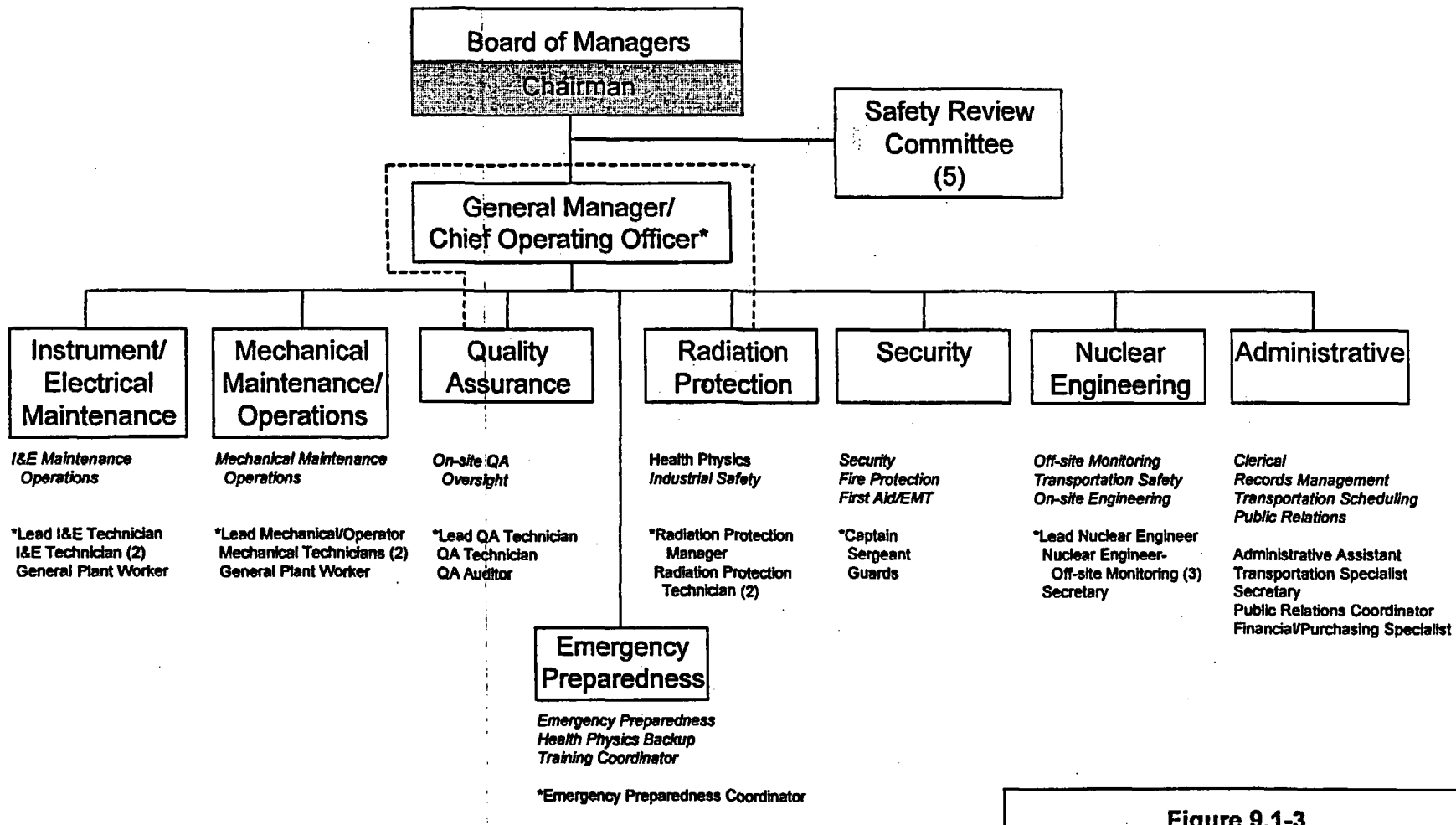

Figure 9.1-3

OPERATIONAL ORGANIZATION

PRIVATE FUEL STORAGE FACILITY
SAFETY ANALYSIS REPORT

CHAPTER 10

OPERATING CONTROLS AND LIMITS

TABLE OF CONTENTS

SECTION	TITLE	PAGE
10.1	OPERATING CONTROLS AND LIMITS	10.1-1

TABLE OF CONTENTS (cont.)

LIST OF APPENDICES

APPENDIX	TITLE
10A	TECHNICAL SPECIFICATION BASES FOR THE PFSF

CHAPTER 10

OPERATING CONTROLS AND LIMITS

10.1 OPERATING CONTROLS AND LIMITS

Design criteria and functional descriptions of safety features are contained in Chapter 3 (Principal Design Criteria) and Chapter 4 (Installation Design). Required functional and operating limits, limiting conditions for operations, surveillance requirements, design features, and administrative controls are contained within the PFSF Technical Specifications in Appendix A of the License Application.

The PFSF Technical Specifications have been developed consistent with the format of the improved standard technical specifications. The bases for the PFSF Technical Specifications are included in Chapter 10, Appendix 10A.

THIS PAGE INTENTIONALLY LEFT BLANK

APPENDIX 10A

TECHNICAL SPECIFICATION BASES FOR THE PFSF

APPENDIX 10A

TECHNICAL SPECIFICATION BASES FOR PFSF

TABLE OF CONTENTS

SECTION	TITLE	PAGE
B 3.0	LIMITING CONDITION FOR OPERATION (LCO) APPLICABILITY	1
B 3.0	SURVEILLANCE REQUIREMENT (SR) APPLICABILITY	5
B 3.1	STORAGE CASK Integrity	10
B 3.1.1	STORAGE CASK Heat Removal System	10
B 3.2	STORAGE CASK Radiation Protection	16
B 3.2.1	CANISTER and TRANSFER CASK Removable Contamination	16
B 3.2.2	STORAGE CASK Average Surface Dose Rates	20

B 3.0 LIMITING CONDITION FOR OPERATION (LCO) APPLICABILITY

BASES

LCOs	LCO 3.0.1, 3.0.2, 3.0.4, and 3.0.5 establish the general requirements applicable to all Specifications and apply at all times, unless otherwise stated.
LCO 3.0.1	LCO 3.0.1 establishes the Applicability statement within each individual Specification as the requirement for when the LCO is required to be met (i.e., when the facility is in the specified conditions of the Applicability statement of each Specification).
LCO 3.0.2	LCO 3.0.2 establishes that upon discovery of a failure to meet an LCO, the associated ACTIONS shall be met. The Completion Time of each Required Action for an ACTIONS Condition is applicable from the point in time that an ACTIONS Condition is entered. The Required Actions establish those remedial measures that must be taken within specified Completion Times when the requirements of an LCO are not met. This Specification establishes that: a. Completion of the Required Actions within the specified Completion Times constitutes compliance with a Specification; and b. Completion of the Required Actions is not required when an LCO is met within the specified Completion Time, unless otherwise specified. There are two basic types of Required Actions. The first type of Required Action specifies a time limit in which the LCO must be met. This time limit is the Completion Time to restore a system or component or to restore variables to within specified limits. Whether stated as a Required Action or not, correction of the entered Condition is an action that may always be considered upon entering ACTIONS. The second type of Required Action specifies the remedial measures that permit continued operation that is not

(continued)

BASES

LCO 3.0.2 (continued)

further restricted by the Completion Time. In this case, compliance with the Required Actions provides an acceptable level of safety for continued operation.

Completing the Required Actions is not required when an LCO is met or is no longer applicable, unless otherwise stated in the individual Specifications.

The Completion Times of the Required Actions are also applicable when a system or component is removed from service intentionally. The reasons for intentionally relying on the ACTIONS include, but are not limited to, performance of Surveillances, preventive maintenance, corrective maintenance, or investigation of operational problems. Entering ACTIONS for these reasons must be done in a manner that does not compromise safety. Intentional entry into ACTIONS should not be made for operational convenience.

LCO 3.0.3

This specification is not applicable to the PFSF because it describes conditions under which a power reactor must be shut down when an LCO is not met and an associated ACTION is not met or provided. The placeholder is retained for consistency with the power reactor technical specifications.

LCO 3.0.4

LCO 3.0.4 establishes limitations on changes in specified conditions in the Applicability when an LCO is not met. It precludes placing the unit in a specified condition stated in that Applicability (e.g., Applicability desired to be entered) when the following exist:

a. Facility conditions are such that the requirements of the LCO would not be met in the Applicability desired to be entered; and

b. Continued noncompliance with the LCO requirements, if the Applicability were entered, would result in being required to

(continued)

BASES

LCO 3.0.4 (continued)

exit the Applicability desired to be entered to comply with the Required Actions.

Compliance with Required Actions that permit continued operation of the facility for an unlimited period of time in a specified condition provides an acceptable level of safety for continued operation. This is without regard to the status of the facility. Therefore, in such cases, entry into a specified condition in the Applicability may be made in accordance with the provisions of the Required Actions. The provisions of this Specification should not be interpreted as endorsing the failure to exercise the good practice of restoring systems or components before entering an associated specified condition in the Applicability.

The provisions of LCO 3.0.4 shall not prevent changes in specified conditions in the Applicability that are required to comply with ACTIONS.

Exceptions to LCO 3.0.4 are stated in the individual Specifications. Exceptions may apply to all the ACTIONS or to a specific Required Action of a Specification.

LCO 3.0.5

LCO 3.0.5 establishes the allowance for restoring equipment to service under administrative controls when it has been removed from service or determined to not meet the LCO to comply with the ACTIONS. The sole purpose of this Specification is to provide an exception to LCO 3.0.2 (e.g., to not comply with the applicable Required Action(s)) to allow the performance of testing to demonstrate:

a. The equipment being returned to service meets the LCO; or

b. Other equipment meets the applicable LCOs.

(continued)

BASES

LCO 3.0.5 (continued)

The administrative controls ensure the time the equipment is returned to service in conflict with the requirements of the ACTIONS is limited to the time absolutely necessary to perform the allowed testing. This Specification does not provide time to perform any other preventive or corrective maintenance.

B 3.0 SURVEILLANCE REQUIREMENT (SR) APPLICABILITY

BASES

SRs

SR 3.0.1 through SR 3.0.4 establish the general requirements applicable to all Specifications and apply at all times, unless otherwise stated.

SR 3.0.1

SR 3.0.1 establishes the requirement that SRs must be met during the specified conditions in the Applicability for which the requirements of the LCO apply, unless otherwise specified in the individual SRs. This Specification is to ensure that Surveillances are performed to verify that systems and components meet the LCO and variables are within specified limits. Failure to meet a Surveillance within the specified Frequency, in accordance with SR 3.0.2, constitutes a failure to meet an LCO.

Systems and components are assumed to meet the LCO when the associated SRs have been met. Nothing in this Specification, however, is to be construed as implying that systems or components meet the associated LCO when:

a. The systems or components are known to not meet the LCO, although still meeting the SRs; or

b. The requirements of the Surveillance(s) are known to be not met between required Surveillance performances.

Surveillances do not have to be performed when the facility is in a specified condition for which the requirements of the associated LCO are not applicable, unless otherwise specified.

Surveillances, including Surveillances invoked by Required Actions, do not have to be performed on equipment that has been determined to not meet the LCO because the ACTIONS define the remedial measures that apply. Surveillances have to be met and performed in accordance with SR 3.0.2, prior to returning equipment to service. Upon completion of maintenance, appropriate post-maintenance testing is required. This includes ensuring applicable Surveillances are not failed and their most

(continued)

BASES

SR 3.0.1 (continued)

recent performance is in accordance with SR 3.0.2.

Post maintenance testing may not be possible in the current specified conditions in the Applicability due to the necessary facility parameters not having been established. In these situations, the equipment may be considered to meet the LCO provided testing has been satisfactorily completed to the extent possible and the equipment is not otherwise believed to be incapable of performing its function. This will allow operation to proceed to a specified condition where other necessary post maintenance tests can be completed.

SR 3.0.2

SR 3.0.2 establishes the requirements for meeting the specified Frequency for Surveillances and any Required Action with a Completion Time that requires the periodic performance of the Required Action on a "once per..." interval.

SR 3.0.2 permits a 25% extension of the interval specified in the Frequency. This extension facilitates Surveillance scheduling and considers facility conditions that may not be suitable for conducting the Surveillance (e.g., transient conditions or other ongoing Surveillance or maintenance activities).

The 25% extension does not significantly degrade the reliability that results from performing the Surveillance at its specified Frequency. This is based on the recognition that the most probable result of any particular Surveillance being performed is the verification of conformance with the SRs. The exceptions to SR 3.0.2 are those Surveillances for which the 25% extension of the interval specified in the Frequency does not apply. These exceptions are stated in the individual Specifications as a Note in the Frequency stating, "SR 3.0.2 is not applicable."

As stated in SR 3.0.2, the 25% extension also does not apply to the initial portion of a periodic Completion Time that requires performance on a "once per..." basis. The 25% extension applies to each performance after the initial performance. The initial performance of the Required Action, whether it is a particular Surveillance or some other remedial action, is considered a single action with a single Completion Time. One reason for not allowing the 25% extension to this Completion Time is that such an action

(continued)

BASES

SR 3.0.2 (continued)

usually verifies that no loss of function has occurred by checking the status of redundant or diverse components or accomplishes the function of the affected equipment in an alternative manner.

The provisions of SR 3.0.2 are not intended to be used repeatedly merely as an operational convenience to extend Surveillance intervals or periodic Completion Time intervals beyond those specified.

SR 3.0.3

SR 3.0.3 establishes the flexibility to defer declaring affected equipment as not meeting the LCO or an affected variable outside the specified limits when a Surveillance has not been completed within the specified Frequency. A delay period of up to 24 hours or up to the limit of the specified Frequency, whichever is less, applies from the point in time that it is discovered that the Surveillance has not been performed in accordance with SR 3.0.2, and not at the time that the specified Frequency was not met.

This delay period provides adequate time to complete Surveillances that have been missed. This delay period permits the completion of a Surveillance before complying with Required Actions or other remedial measures that might preclude completion of the Surveillance.

The basis for this delay period includes consideration of facility conditions, adequate planning, availability of personnel, the time required to perform the Surveillance, the safety significance of the delay in completing the required Surveillance, and the recognition that the most probable result of any particular Surveillance being performed is the verification of conformance with the requirements. When a Surveillance with a Frequency based not on time intervals, but upon specified facility conditions, is discovered not to have been performed when specified, SR 3.0.3 allows the full delay period of 24 hours to perform the Surveillance.

SR 3.0.3 also provides a time limit for completion of Surveillances that become applicable as a consequence of changes in the specified conditions in the Applicability imposed by the Required Actions.

(continued)

BASES

SR 3.0.3 (continued)

Failure to comply with specified Frequencies for SRs is expected to be an infrequent occurrence. Use of the delay period established by SR 3.0.3 is a flexibility which is not intended to be used as an operational convenience to extend Surveillance intervals.

If a Surveillance is not completed within the allowed delay period, then the equipment is considered to not meet the LCO or the variable is considered outside the specified limits and the Completion Times of the Required Actions for the applicable LCO Conditions begin immediately upon expiration of the delay period. If a Surveillance is failed within the delay period, then the equipment does not meet the LCO, or the variable is outside the specified limits and the Completion Times of the Required Actions for the applicable LCO Conditions begin immediately upon the failure of the Surveillance.

Completion of the Surveillance within the delay period allowed by this Specification, or within the Completion Time of the ACTIONS, restores compliance with SR 3.0.1.

SR 3.0.4

SR 3.0.4 establishes the requirement that all applicable SRs must be met before entry into a specified condition in the Applicability.

This Specification ensures that system and component requirements and variable limits are met before entry into specified conditions in the Applicability for which these systems and components ensure safe operation of the facility.

The provisions of this Specification should not be interpreted as endorsing the failure to exercise the good practice of restoring systems or components before entering an associated specified condition in the Applicability.

However, in certain circumstances, failing to meet an SR will not result in SR 3.0.4 restricting a change in specified condition. When a system, subsystem, division, component, device, or variable is

(continued)

BASES

SR 3.0.4 (continued)

outside its specified limits, the associated SR(s) are not required to be performed per SR 3.0.1, which states that Surveillances do not have to be performed on equipment that has been determined to not meet the LCO. When equipment does not meet the LCO, SR 3.0.4 does not apply to the associated SR(s) since the requirement for the SR(s) to be performed is removed. Therefore, failing to perform the Surveillance(s) within the specified Frequency does not result in an SR 3.0.4 restriction to changing specified conditions of the Applicability. However, since the LCO is not met in this instance, LCO 3.0.4 will govern any restrictions that may (or may not) apply to specified condition changes.

The provisions of SR 3.0.4 shall not prevent changes in specified conditions in the Applicability that are required to comply with ACTIONS.

The precise requirements for performance of SRs are specified such that exceptions to SR 3.0.4 are not necessary. The specific time frames and conditions necessary for meeting the SRs are specified in the Frequency, in the Surveillance, or both. This allows performance of Surveillances when the prerequisite condition(s) specified in a Surveillance procedure require entry into the specified condition in the Applicability of the associated LCO prior to the performance or completion of a Surveillance. A Surveillance that could not be performed until after entering the LCO Applicability would have its Frequency specified such that it is not "due" until the specific conditions needed are met. Alternately, the Surveillance may be stated in the form of a Note as not required (to be met or performed) until a particular event, condition, or time has been reached. Further discussion of the specific formats of SRs' annotation is found in PFSF Technical Specification Section 1.4, Frequency.

B 3.1 STORAGE CASK Integrity

B 3.1.1 STORAGE CASK Heat Removal System

BASES

BACKGROUND

The STORAGE CASK and CANISTER Heat Removal System is a passive, air-cooled, convective heat transfer system which ensures heat from the CANISTER is transferred to the environs by the chimney effect. Relatively cool air is drawn into the annulus between the STORAGE CASK and the CANISTER through the four inlet air ducts at the bottom of the STORAGE CASK. The CANISTER transfers its heat from its surface to the air via natural convection. The buoyancy created by the heating of the air creates a chimney effect and the air is forced back into the environs through the four outlet air ducts at the top of the STORAGE CASK.

APPLICABLE SAFETY ANALYSIS

The thermal analyses of the STORAGE CASK and CANISTER take credit for the decay heat from the spent fuel assemblies being ultimately transferred to the ambient environment surrounding the STORAGE CASK. Transfer of heat away from the fuel assemblies ensures that the fuel cladding and other STORAGE CASK and CANISTER component temperatures do not exceed applicable limits. Under normal storage conditions, the four inlet and four outlet air ducts are unobstructed and full air flow (i.e., maximum heat transfer for the given ambient temperature) occurs.

Analyses have been performed for the complete obstruction of two, three, and four inlet air ducts, and results of these analyses are included in Chapter 11 of the HI-STORM STORAGE CASK SAR. Blockage of two inlet air ducts reduces air flow through the STORAGE CASK annulus and decreases heat transfer from the CANISTER. Under this off-normal condition, no STORAGE CASK or CANISTER components exceed the short term temperature limits.

Blockage of three inlet air ducts further reduces air flow through the STORAGE CASK annulus and decreases heat transfer from the CANISTER. Under this accident condition, no STORAGE CASK or CANISTER components exceed the short term temperature limits.

(continued)

BASES

APPLICABLE SAFETY ANALYSIS (continued)

The complete blockage of all four inlet air ducts stops air cooling of the CANISTER. The CANISTER will continue to radiate heat to the relatively cooler inner shell of the STORAGE CASK. With the loss of air cooling, the STORAGE CASK and CANISTER component temperatures will increase toward their respective short-term temperature limits. The limiting component is STORAGE CASK concrete temperature, which, by analysis, approaches its temperature limit in 33 hours if no action is taken to restore air flow to the Heat Removal System. The analysis assumed a 72 hour duration. At 72 hours, the fuel cladding and CANISTER component temperatures remain below the short term temperature limits.

LCO

The STORAGE CASK Heat Removal System must be verified to be OPERABLE to preserve the assumptions of the thermal analyses. Operability of the Heat Removal System ensures that the decay heat generated by the stored fuel assemblies is transferred to the environs at a sufficient rate to maintain fuel cladding and other STORAGE CASK and CANISTER component temperatures within design limits.

APPLICABILITY

The LCO is applicable during STORAGE OPERATIONS. Once a STORAGE CASK containing a CANISTER loaded with spent fuel has been placed in storage, the Heat Removal System must be OPERABLE to ensure adequate heat transfer of the decay heat away from the fuel assemblies.

ACTIONS

A note has been added to the ACTIONS which states that, for this LCO, separate Condition entry is allowed for each STORAGE CASK. This is acceptable since the Required Actions for each Condition provide appropriate compensatory measures for each STORAGE CASK not meeting the LCO. Subsequent STORAGE CASKs that don't meet the LCO are governed by subsequent Condition entry and application of associated Required Actions.

(continued)

BASES

ACTIONS
(continued)

A.1

If the Heat Removal System has been determined to be inoperable, it must be restored to OPERABLE status within eight hours. Eight hours is reasonable based on the accident analysis which shows that the limiting STORAGE CASK and CANISTER component temperatures will not reach their temperature limits for 33 hours after a complete blockage of all inlet air ducts. This time frame allows for the 24 hour Surveillance interval (assuming complete blockage immediately after successful performance of the previous Surveillance) plus eight hours (typically, one operating shift) to take action to remove the obstructions in the air flow path.

B.1

If the Heat Removal System cannot be restored to OPERABLE status within eight hours, the innermost portion of the STORAGE CASK concrete may be affected. Therefore, Surveillance Requirement (SR) 3.2.2.1 is required to be performed to determine the effectiveness of the radiation shielding provided by the concrete. This SR must be performed immediately and repeated every twelve hours thereafter to provide timely and continued evaluation of whether the concrete is providing adequate shielding. As necessary, additional radiation protection measures such as temporary shielding shall be provided. The Completion Time is reasonable considering the expected slow rate of deterioration, if any, of the concrete under elevated temperatures.

B.2.1

In addition to Required Action B.1, efforts must continue to restore cooling to the STORAGE CASK and CANISTER. Efforts must continue to restore the Heat Removal System to OPERABLE status by removing the air flow obstruction(s) unless optional Required Action B.2.2 is being implemented.

(continued)

BASES

ACTIONS
(continued)

This Required Action must be complete in 48 hours. The Completion Time reflects a conservative total time period without any cooling of 80 hours, assuming all of the inlet air ducts become blocked immediately after the last previous successful Surveillance. The results of the thermal analysis of this accident show that the fuel cladding temperature does not reach its short term temperature limit for more than 72 hours. It is also unlikely that an unforeseen event could cause complete blockage of all four air inlet ducts immediately after the last successful Surveillance.

B.2.2

Since the thermal analyses show that the concrete approaches its short term temperature limit at 33 hours, action must be taken to ensure the fuel in the CANISTER does not exceed its short term temperature limit. In lieu of implementing Required Action B.2.1, transfer of the CANISTER into a TRANSFER CASK will place the CANISTER in an analyzed condition and ensure adequate fuel cooling until actions to correct the Heat Removal System inoperability can be completed. Transfer of the CANISTER into a TRANSFER CASK removes the STORAGE CASK from the LCO Applicability since STORAGE OPERATIONS do not include times when the CANISTER resides in the TRANSFER CASK.

An engineering evaluation must be performed to determine if any concrete deterioration has occurred which prevents it from performing its design function. If the evaluation is successful and the air flow obstructions have been cleared, the STORAGE CASK Heat Removal System may be considered OPERABLE and the CANISTER transferred back into the STORAGE CASK. Compliance with LCO 3.1.1 is then restored. If the evaluation is unsuccessful, the CANISTER must be transferred into a different, fully qualified STORAGE CASK to resume STORAGE OPERATIONS and restore compliance with LCO 3.1.1.

(continued)

BASES

ACTIONS (continued)

B.2.2 (continued)

In lieu of performing the engineering evaluation, PFS may opt to proceed directly to transferring the CANISTER into a different, fully qualified STORAGE CASK.

The Completion Time of 48 hours reflects a conservative total time period without any cooling of 80 hours, assuming all of the inlet air ducts become blocked immediately after the last previous successful Surveillance. The results of the thermal analysis of this accident show that the fuel cladding temperature does not reach its short term temperature limit for more than 72 hours. It is also unlikely that an unforeseen event could cause complete blockage of all four air inlet ducts immediately after the last successful Surveillance.

SURVEILLANCE REQUIREMENTS

SR 3.1.1.1

The long-term integrity of the stored fuel is dependent on the ability of the STORAGE CASK to reject heat from the CANISTER to the environment. There are two options for implementing SR 3.1.1.1, either of which is acceptable for demonstrating that the Heat Removal System is OPERABLE.

Visual observation that all four inlet and outlet air ducts are unobstructed ensures that air flow past the CANISTER is occurring and heat transfer is taking place. Complete blockage of any one or more inlet or outlet air ducts renders the Heat Removal System inoperable and this LCO not met. Partial blockage of one or more inlet or outlet air ducts does not constitute inoperability of the Heat Removal System. However, corrective actions should be taken promptly to remove the obstruction and restore full flow through the affected duct(s).

(continued)

BASES

SURVEILLANCE REQUIREMENTS (continued)

SR 3.1.1.1 (continued)

As an alternative, for STORAGE CASKs with air temperature monitoring instrumentation installed in the outlet air ducts, the temperature rise between ambient and the STORAGE CASK air outlet may be monitored to verify operability of the Heat Removal System. Blocked inlet or outlet air ducts will reduce air flow and increase the temperature rise experienced by the air as it removes heat from the CANISTER. Based on the analyses, provided the air temperature rise is less than the limits stated in the SR, adequate air flow and, therefore, adequate heat transfer is occurring to provide assurance of long term fuel cladding integrity. The reference ambient temperature used to perform this Surveillance shall be measured at the PFSF.

The Frequency of 24 hours is reasonable based on the time necessary for STORAGE CASK components to heat up to unacceptable temperatures assuming design basis heat loads, and allowing for corrective actions to take place upon discovery of blockage of air ducts.

B 3.2 STORAGE CASK Radiation Protection

B 3.2.1 CANISTER and TRANSFER CASK Removable Contamination

BASES

BACKGROUND

There is a potential for the presence of some contamination on the external surfaces of CANISTERs as a result of submergence in spent fuel pools during spent fuel loading operations at the originating nuclear power plants, even though measures are taken to prevent contamination (Chapter 7 of the HI-STAR Shipping Cask SAR). Following fuel loading operations at the originating nuclear power plants, a smear survey is performed to determine removable contamination levels on accessible outer CANISTER surfaces near the top of the CANISTER (CANISTER lid and approximately 3 inches on CANISTER sides down from the lid). In the event CANISTER removable contamination levels (measured on accessible CANISTER surfaces) exceed the criteria specified in Section 7 of the HI-STAR Shipping Cask SAR, the CANISTER will not be released for shipment to the PFSF. CANISTERs with levels of removable contamination above the specified limit must be decontaminated prior to release for transport to the PFSF.

Once the Shipping Cask arrives at the PFSF and its closure is removed, a smear survey of accessible portions of the CANISTER is again performed, which is the subject of this specification. Verification that accessible external portions of the CANISTER are not contaminated above the specified levels allows dry fuel storage activities to proceed without additional radiological controls to prevent the spread of contamination and reduces personnel dose due to the spread of loose contamination or airborne contamination. Verification that accessible internal portions of the TRANSFER CASK are not contaminated above the specified levels prevents transferring contamination from the TRANSFER CASK to the CANISTER during CANISTER transfer operations. This is consistent with ALARA practices.

(continued)

BASES

APPLICABLE SAFETY ANALYSIS

The analysis in Section 8.1.5 assumes that the entire CANISTER external surface is covered with beta-gamma contamination at the maximum permissible level, and postulates release of 100% of this contamination to the atmosphere. This analysis concludes that doses to offsite personnel, and onsite personnel 150 meters away from the release, are low, less than 1 mrem. Higher levels of contamination on the external surfaces of the CANISTERs could lead to higher-than-projected off-site and occupational doses for off-normal events, such as bumping a CANISTER, that result in release of activity from the external surfaces of the CANISTER. Internal surfaces of the TRANSFER CASK are also checked for contamination to prevent contamination on the TRANSFER CASK internal surfaces from contaminating the external surfaces of a CANISTER when the CANISTER is moved into or out of the TRANSFER CASK.

LCO

Removable surface contamination on the TRANSFER CASK exterior surfaces and accessible surfaces of the CANISTER is limited to 22,000 dpm/100 cm^2 from beta and gamma sources and 2,200 dpm/100 cm^2 from alpha sources. These limits are consistent with the requirements of 49 CFR 173.443 for transporting spent fuel shipping containers. Only loose contamination is controlled, as fixed contamination will not result from the transfer cask loading process.

LCO 3.2.1 requires removable contamination to be within the specified limits for the accessible exterior surfaces of the CANISTER and accessible interior portions of the TRANSFER CASK. The location and number of surface swipes used to determine compliance with this LCO are determined based on standard industry practice and the contamination measurement program for objects of this size. Accessible portions of the CANISTER means the top of the CANISTER lid and upper portion of the CANISTER external shell wall, approximately 3 inches below the top of the CANISTER. The number and location of swipes for

(continued)

BASES

LCO (continued)

the accessible portion of the CANISTER shall assure determination of a removable contamination value representative of the entire upper circumference of the CANISTER, while implementing sound ALARA practices.

APPLICABILITY

Verification that the TRANSFER CASK and CANISTER surface contamination is less than the LCO limit is performed during LOADING OPERATIONS. It is a one-time measurement for each CANISTER, and measurement of the TRANSFER CASK and CANISTER surface contamination levels is not performed again when the CANISTER is removed from the STORAGE CASK and loaded into a Shipping Cask for transport off-site, since surface contamination has already been measured prior to moving the subject CANISTER to the cask storage area.

ACTIONS

A note has been added to the ACTIONS which states that, for this LCO, separate Condition entry is allowed for each TRANSFER CASK. This is acceptable since the Required Actions for each Condition provide appropriate compensatory measures for each TRANSFER CASK not meeting the LCO. Subsequent TRANSFER CASKs that do not meet the LCO are governed by subsequent Condition entry and application of associated Required Actions.

A.1

If the removable surface contamination of a TRANSFER CASK or CANISTER is not within the LCO limits, action must be initiated to decontaminate the TRANSFER CASK or CANISTER and bring the removable surface contamination within limits. The Completion Time of 72 hours is appropriate given that sufficient time is needed to prepare for, and complete the decontamination once the LCO is determined not to be met.

(continued)

BASES

ACTIONS (continued)

B.1

If a CANISTER cannot be decontaminated so that removable surface contamination levels are within the LCO limits, then that CANISTER shall be returned to the originating nuclear power plant for decontamination. The 21 days Completion Time is reasonable based on the time required to secure the availability of a transport vehicle, prepare the Shipping Cask for transport, and transport the loaded Shipping Cask back to the originating nuclear power plant in an orderly manner without challenging personnel.

B.2

A TRANSFER CASK shall not be used for CANISTER transfer operations until the TRANSFER CASK has been decontaminated so that removable surface contamination levels are within the LCO limits. Contamination exceeding LCO limits could be transferred from internal surfaces of the TRANSFER CASK to external surfaces of a CANISTER.

SURVEILLANCE REQUIREMENTS

SR 3.2.1.1

This SR verifies that the removable surface contamination on accessible portions of the TRANSFER CASK internal surfaces and CANISTER external surfaces is less than the limits in the LCO. The Surveillance is performed using smear surveys to detect removable surface contamination. The Frequency requires performing the verification once during LOADING OPERATIONS in order to confirm that the CANISTER transfer operation can be performed and the STORAGE CASK can be moved to the cask storage area without spreading loose contamination.

B 3.2 STORAGE CASK Radiation Protection

B 3.2.2 STORAGE CASK Average Surface Dose Rates

BASES

BACKGROUND	The regulations governing the operation of an ISFSI set limits on the control of occupational radiation exposure and radiation doses to the general public. Occupational radiation exposure should be kept as low as reasonably achievable (ALARA) and within the limits of 10CFR Part 20. Radiation doses to the public are limited for both normal (10 CFR 72.104) and accident (10 CFR 72.106) conditions.
APPLICABLE SAFETY ANALYSIS	The STORAGE CASK average surface dose rates are not an assumption in any accident analysis, but are used to ensure compliance with regulatory limits on occupational dose and dose to the public.
LCO	The limits on the STORAGE CASK average surface dose rates were selected to minimize radiation exposure to the general public and maintain occupational dose ALARA to personnel working in the vicinity of the STORAGE CASKs.
APPLICABILITY	The average STORAGE CASK surface dose rates apply during STORAGE OPERATIONS. Radiation doses during STORAGE OPERATIONS are monitored for the STORAGE CASK in accordance with the PFSF radiation protection program required by 10 CFR 72.126.

(continued)

BASES

ACTIONS

A note has been added to the ACTIONS which states that, for this LCO, separate Condition entry is allowed for each STORAGE CASK. This is acceptable since the Required Actions for each Condition provide appropriate compensatory measures for each STORAGE CASK not meeting the LCO. Subsequent STORAGE CASKs that don't meet the LCO are governed by subsequent Condition entry and application of associated Required Actions.

A.1

If the STORAGE CASK average surface dose rates are not within limits, it could be an indication that a fuel assembly was inadvertently loaded into the CANISTER that did not meet the Functional and Operating Limits in PFSF Technical Specification Section 2.0. Administrative verification of the CANISTER fuel loading, by means such as review of video recordings and records of the loaded fuel assembly serial numbers, can establish whether a mis-loaded fuel assembly is the cause of the out of limit condition. The 7 day Completion Time is based on the time required for the originating nuclear power plant to perform such a verification, and for communication between PFSF and the originating nuclear power plant.

A.2

If the STORAGE CASK average surface dose rates are not within limits, and it is determined that the CANISTER was loaded with the correct fuel assemblies, an analysis may be performed. This analysis will determine if the STORAGE CASK, once located at the ISFSI, would result in the ISFSI offsite or occupational doses exceeding regulatory limits in 10 CFR Part 20 or 10 CFR Part 72. If it is determined that the out of limit average surface dose rates do not result in the regulatory limits being exceeded, STORAGE OPERATIONS may proceed. The 7 day Completion Time is based on the time required to verify that the CANISTER was loaded with the correct fuel assemblies and for preparation of the dose analysis.

(continued)

BASES

ACTIONS (continued)

B.1

If it is verified in A.1 that the correct fuel was loaded into the CANISTER, then it is anticipated that STORAGE CASK dose rates would be within the LCO limits, unless the STORAGE CASK is not providing adequate shielding. This is unlikely, but could occur if there were a void space in the STORAGE CASK's concrete radial shield. In the event the Analysis performed in A.2 indicates that shielding afforded by the STORAGE CASK is inadequate or suspect, the CANISTER is transferred to a different STORAGE CASK. The 7 days Completion Time is reasonable based on the time required to prepare for and implement the transfer operation in an orderly manner without challenging personnel.

C.1

Verification in A.1 that the fuel loading was incorrect could be the cause of STORAGE CASK dose rates in excess of the LCO limits. In the event that fuel loading is determined to be incorrect, and the Analysis performed in A.2 indicates that dose rates are excessive, then the CANISTER is returned to the originating nuclear power plant. If the verification in A.1 determines that the fuel loading is correct, but the Analysis performed in A.2 indicates that dose rates are excessive even though the shielding afforded by the STORAGE CASK is performing as expected, the CANISTER is returned to the originating nuclear power plant. The CANISTER producing excessive radiation levels is not stored on the PFSF site, since offsite radiation protection requirements of 10 CFR Part 20 or 10 CFR Part 72 may not be met due to the relatively high STORAGE CASK average surface dose rates. The CANISTER must be returned to the originating nuclear power plant. The 21 days Completion Time is reasonable based on the time required to secure the availability of a transport vehicle, make the necessary preparations for transferring the CANISTER from the STORAGE CASK to a Shipping Cask, perform this CANISTER transfer operation to an available Shipping Cask, prepare the Shipping Cask for transport, and transport the loaded Shipping Cask back to the originating nuclear power plant in an orderly manner without challenging personnel.

SURVEILLANCE SR 3.2.2.1

REQUIREMENTS

This SR ensures that the STORAGE CASK average surface dose rates are within the LCO limits within 24 hours after placing the STORAGE CASK in its designated storage location in the PFSF.

CHAPTER 11

QUALITY ASSURANCE

TABLE OF CONTENTS

SECTION	TITLE	PAGE
11.1	QA PROGRAM DESCRIPTION	11.1-1
11.1.1	Organization	11.1-1
11.1.2	QA Program	11.1-3
11.1.3	Design Control	11.1-5
11.1.4	Procurement Document Control	11.1-5
11.1.5	Instructions, Procedures, and Drawings	11.1-6
11.1.6	Document Control	11.1-6
11.1.7	Control of Purchased Materials, Equipment, and Services	11.1-6
11.1.8	Identification and Control of Materials, Parts, and Components	11.1-7
11.1.9	Control of Special Processes	11.1-7
11.1.10	Licensee Inspection	11.1-7
11.1.11	Test Control	11.1-8
11.1.12	Control of Measuring and Test Equipment	11.1-8
11.1.13	Handling, Storage, and Shipping Control	11.1-8
11.1.14	Inspection, Test, and Operating Status	11.1-9
11.1.15	Nonconforming Materials, Parts, or Components	11.1-9
11.1.16	Corrective Action	11.1-9
11.1.17	QA Records	11.1-10
11.1.18	Audits	11.1-10
11.2	REFERENCES	11.2-1

THIS PAGE INTENTIONALLY LEFT BLANK

CHAPTER 11

QUALITY ASSURANCE

11.1 QA PROGRAM DESCRIPTION

This section addresses the means by which PFSLLC meets the requirement to establish and implement a Quality Assurance (QA) program in accordance with 10 CFR 72, Subpart G. The PFSLLC QA Program (Reference 1) was approved by the NRC on November 3, 1996 for use under 10 CFR 71, Subpart H (Docket 71-0829). This PFSLLC QA Program is being used to satisfy the requirements of 10 CFR 72, Subpart G. Implementation of the QA program as described below ensures that quality standards are met per the requirements of 10 CFR 72.122(a).

11.1.1 Organization

Section 1.0 of the PFSLLC QA Program describes the PFSLLC organization responsible for the establishment and execution of the QA Program at the PFSF.

The PFSLLC organization during the pre-licensing and the licensing and construction stages of the PFSF is depicted on Figures 9.1-1 and 9.1-2 respectively, and is comprised of a Board of Managers, Project Director, Architect Engineer, Storage Cask Vendors, Licensing and Regulatory Committee, Technology Committee, QA, and other PFSLLC supporting organizations and committees. The key QA responsibilities are:

- Board of Managers - Responsible for assuring the effective and efficient implementation of the QA Program.

- Architect/Engineer (A/E) - Responsible for the design of the PFSF. The A/E is responsible for performing design and design control activities in accordance with an approved QA program.

- QA - Responsible for maintaining the QA Program, assessing the effectiveness of the program by performing independent assessments and audits, and qualifying subcontractors and suppliers. QA has the authority to "stop work" in cases where project activities are not in compliance with specifications, procedures, codes, standards, or regulations or when the quality of Structures, Systems, and Components (SSCs) are indeterminate.

  QA is an independent organization with direct access to the Board of Managers and shall not be responsible for day to day activities, costs, or schedules. QA has the organizational freedom and authority to identify quality problems; to stop unsatisfactory work and assure that proper processing, delivery, installation, or use is controlled until proper disposition of a nonconformance, deficiency, or unsatisfactory condition; to initiate, recommend, or provide solutions; and to verify implementation of solutions. QA shall have sufficient access to all work areas necessary to perform their duties.

  QA oversight activities will include contract/specification preparation review, oversight during procurement and fabrication activities, and receipt inspection. Fabrication oversight will include surveillance, inspection, and audits to ensure fabricator compliance with all contract and licensing documents. On-site shop inspections will be a large element of the oversight plan. Typical oversight activities include (but are not limited to) review of procurement documents, drawings, specifications, personnel qualifications, test and NDE reports, non-conformance reports, and as-built

drawings. Contract documents will ensure that PFS personnel have access to the fabrication facilities to perform the above functions.

The PFSLLC QA organization is responsible for providing sufficient QA staff to provide assurance that activities that are important to safety have been correctly performed.

QA, through continuing involvement, evaluations, assessment, surveillance's, and audits, is responsible for ensuring that the PFSLLC QA policies and objectives are met by the PFSLLC and its subcontractors.

The PFSLLC organization, during the operational stage of the PFSF, is depicted on Figure 9.1-3 and is comprised of a Board of Managers, General Manager, Lead QA Technician, and other manager positions. The responsibilities of QA during the operational stage of PFSF are the same as previously described in the earlier two stages. The key QA responsibilities are:

- Board of Managers - Responsible for assuring the effective and efficient implementation of the QA Program.

- Lead QA Technician - Responsible for implementing and maintaining the QA Program during operation of the PFSF.

11.1.2 QA Program

Section 2.0 of the PFSLLC QA Program describes the QA program that provides control over all activities affecting quality at the PFSF.

The QA Program is comprised of the QA Program Description and QA Procedures. The QA Program provides control of activities affecting quality in SSCs that are important to safety.

The QA classification of SSCs at the PFSF classified as "Important to Safety" are shown on Table 3.4-1 of this SAR.

The level of quality applied to those systems that are not designated as important to safety shall be specified within implementing procedures, specifications, plans, and drawings.

Individuals responsible for QA functions shall be trained as required with implementing procedures. When required by applicable codes and standards, personnel requiring qualification shall be appropriately certified in accordance with approved procedures.

The QA Program shall be reviewed at established intervals to assure that it is being effectively implemented and is adequate. All QA program requirements shall be required of subcontractors and suppliers and translated within procedures, instructions, purchase orders, contracts, specifications, plans, and drawings.

The QA Program shall be implemented by the member organizations of the PFSF through the implementation of the PFSLLC QA Program. Other organizations responsible for quality shall provide services in accordance with an approved QA program. The QA Program of the A/E, Stone and Webster Engineering Corporation (SWEC), (Reference 2), has been approved by the NRC as meeting the requirements of 10 CFR 50 Appendix B.

11.1.3 Design Control

Section 3.0 of the PFSLLC QA Program establishes the measures to implement a design control process through approved procedures to ensure that SSCs are designed in accordance with applicable regulatory requirements, codes, and standards.

Procedures shall describe and control the design and any changes from inception through final approval, release, distribution, and implementation; provide identification and control of design interfaces and coordination among participating design organizations; and provide for a design review by qualified personnel.

11.1.4 Procurement Document Control

Section 4.0 of the PFSLLC QA Program establishes the measures to assure that procurement documents covering material, equipment, and services specify appropriate quality requirements. The procurement documents shall specify or reference the applicable requirements, design bases, codes, and standards to assure quality.

Procedures shall delineate requirements for the preparation, review, approval, and control of procurement documentation for all procurement activities and shall provide the requirements for the qualification of suppliers, objective evidence of supplier quality, and the assignment of quality requirements to procurement documents.

To the extent necessary to assure quality, procurement documents shall require suppliers of material, equipment, and services to have a QA program complying with the pertinent provisions of 10 CFR 71, Subpart H or 10 CFR 72 Subpart G. The requirements of 10 CFR 21 shall be specified on procurement documents, as applicable.

11.1.5 Instructions, Procedures, and Drawings

Section 5.0 of the PFSLLC QA Program establishes the measures to assure that activities affecting quality are performed in accordance with instructions, procedures, and drawings that are developed, reviewed, approved, utilized, and controlled in accordance with approved procedures.

Procedures and instructions shall ensure that sufficient records are specified, reflect the quality of the work performed, and comply with appropriate codes, standards and regulatory requirements.

11.1.6 Document Control

Section 6.0 of the PFSLLC QA Program establishes the measures to control the issue, use, review, approval, distribution, and revision of quality related documents, which shall be prepared, reviewed, and approved by qualified personnel using document control procedures.

Procedures shall identify individuals and/or organizations responsible for the control, review, approval, and issuance of documents and shall specify the required reviews, approvals, and distribution of documents.

11.1.7 Control of Purchased Materials, Equipment, and Services

Section 7.0 of the PFSLLC QA Program establishes the measures to assure that purchased materials, equipment, and services conform to the procurement documents.

Procedures shall be used to evaluate and select suppliers and ensure that supplier designs and performance are under the control of an NRC-approved QA program.

11.1.8 Identification and Control of Materials, Parts, and Components

Section 8.0 of the PFSLLC QA Program establishes the measures for the identification and control of materials, parts, and components from their receipt through installation or use.

Procedures shall ensure the identification and control of materials, parts and components.

11.1.9 Control of Special Processes

Section 9.0 of the PFSLLC QA Program establishes the measures to assure that special processes are controlled and accomplished by qualified personnel using qualified procedures in accordance with applicable codes, standards, specifications, criteria, and other special requirements.

Procedures implemented for special processes shall specify the qualifications of personnel, the proper equipment to be used, and control of materials and supplies.

11.1.10 Inspection

Section 10.0 of the PFSLLC QA Program establishes the measures for the inspection of activities affecting quality to verify conformance with approved procedures, drawings, and specifications.

Procedures implemented for inspection activities shall delineate inspection methods, characteristics, and documentation and ensure that inspections are performed by qualified personnel.

11.1.11 Test Control

Section 11.0 of the PFSLLC QA Program establishes the measures for a test program, which demonstrates that SSCs will perform satisfactorily in service.

Procedures implemented for testing shall incorporate or reference requirements and acceptance criteria contained in applicable design documents and specifications and ensure that test results are documented and evaluated to ensure that test requirements have been satisfied.

11.1.12 Control of Measuring and Test Equipment

Section 12.0 of the PFSLLC QA Program establishes the measures to ensure that tools, gauges, instruments, and measuring and test equipment, utilized to verify conformance with established requirements, are controlled, calibrated, and periodically adjusted as required.

Inspection, test, and work procedures shall assure that tools, gauges, instruments, and other inspection, measuring, and test equipment and devices used in activities affecting quality are of the proper range, type, and accuracy to verify conformance to established requirements and test parameters.

11.1.13 Handling, Storage, and Shipping

Section 13.0 of the PFSLLC QA Program establishes the measures to control the handling, storage, shipping, cleaning, packaging, and preservation of materials and equipment to prevent damage, deterioration, or loss through shipment, installation, or use.

Procedures shall delineate the requirements for handling, storage, shipping, cleaning and preservation of materials and equipment; describe special equipment to be used,

protective environments and coatings, or other protective measures; and specify required documentation.

11.1.14 Inspection, Test, and Operating Status

Section 14.0 of the PFSLLC QA Program establishes the measures, which indicate the inspection, test, and operating status of SSCs.

Procedures shall include measures to preclude the bypassing of inspections and tests, to prevent the operation of equipment or systems until authorized by qualified personnel, and to specify appropriate status indicators.

11.1.15 Nonconforming Materials, Parts, or Components

Section 15.0 of the PFSLLC QA Program establishes the measures to control materials, parts, or components that do not conform to specified requirements in order to prevent their inadvertent use or installation.

Procedures shall provide requirements for identifying, segregating, reporting discrepancies, and dispositioning of nonconforming items and reporting nonconforming items to the affected organizations. Procedures shall identify methods for reporting adverse quality conditions in accordance with 10 CFR 21 requirements.

11.1.16 Corrective Action

Section 16.0 of the PFSLLC QA Program establishes the measures to assure that conditions adverse to quality are promptly identified and corrected.
Procedures shall ensure that conditions adverse to quality are identified and reported to the appropriate personnel, and that the cause and corrective action necessary to prevent recurrence of significant conditions adverse to quality are identified, implemented, and followed-up to verify corrective action effectiveness.

11.1.17 QA Records

Section 17.0 of the PFSLLC QA Program establishes the measures for maintaining records of activities affecting quality.

Procedures shall provide controls for the identification, receipt, storage, preservation, safekeeping, traceability, retrieval, and dispositioning of records.

11.1.18 Audits

Section 18.0 of the PFSLLC QA Program establishes the measures for planned and documented audits to verify compliance and effectiveness with all aspects of the PFSLLC QA Program.

Procedures shall ensure that audits are performed by appropriately trained personnel; audit results are documented, reported, and reviewed by appropriate levels of supervision and management; and responsible persons in the area audited take necessary action to correct reported deficiencies.

11.2 REFERENCES

1. PFSLLC QA Program Manual, Current Revision, Docket 71-0829.

2. Stone & Webster Engineering Corporation Standard Nuclear Quality Assurance Program, Docket No. 99900509.

THIS PAGE INTENTIONALLY LEFT BLANK