NAC INTERNATIONAL

Atlanta Corporate Headquarters
3930 East Jones Bridge Road, Suite 200
Norcross, GA 30092
Phone 770-447-1144
Fax 770-447-1797
www.nacintl.com

October 12, 2007

U.S. Nuclear Regulatory Commission
11555 Rockville Pike
Rockville, MD 20852-2738

Attn: Document Control Desk

Subject: Submittal of NAC International Response to the Request for Additional Information (RAI) for Review of the Certificate of Compliance No. 9225, Revision 45, for the Model No. NAC-LWT Package

Docket No. 71-9225, TAC No. L24083

References:
1. Model No. NAC-LWT Package, Certificate of Compliance (CoC) No. 9225, Revision 44, U.S. Nuclear Regulatory Commission (NRC), July 6, 2007
2. Submittal of a Request for an Amendment of Certificate of Compliance (CoC) No. 9225 for the NAC-LWT Cask to Incorporate Various Changes to the Authorized MTR Fuel Contents, NAC International, May 1, 2007
3. Submittal of a Supplement to the Request for an Amendment of Certificate of Compliance (CoC) No. 9225 for the NAC-LWT Cask to Incorporate Various Changes to the Authorized MTR Fuel Contents, NAC International, May 22, 2007
4. Submittal of Proposed Certificate of Compliance (CoC) Changes Based on NAC International May 1, 2007 (Supplemented on May 22, 2007) Request for an Amendment of CoC No. 9225 for the NAC-LWT Cask, NAC International July 23, 2007
5. Request for Additional Information for Review of the Certificate of Compliance No. 9225, Revision 45, for the Model No. NAC-LWT Package, U.S. Nuclear Regulatory Commission, September 13, 2007
6. Schedule for Submittal of NAC International Response to the Request for Additional Information for Review of the Certificate of Compliance No. 9225, Revision 45, for the Model No. NAC-LWT Package, NAC International, September 26, 2007

NAC International (NAC) herewith submits its response to the RAI (Reference 5) on NAC's application for an amendment to Reference 1 as described in References 2 and 3.

This submittal consists of this transmittal letter, the RAI questions with NAC responses presented in the standard NAC RAI response format, a CD containing data input and SCALE 4.3 output files, and the Revision LWT-07F changed SAR pages for the NAC LWT Safety Analysis Report (SAR), including one new and four revised license drawings depicting the spacers. Attachment 1 to this transmittal letter contains a detailed description of all drawing changes. The changed NAC-LWT SAR pages and the drawings incorporate the requested information.

ED20070073

NMSS01
NMSS

In addition to the requested information, some editorial changes were made in Revision LWT-07F of the NAC-LWT SAR in Chapters 1 and 6, correcting the listing of the Criticality Safety Index for various contents; in Chapter 5, correcting the title of Table 5.3-6 and Table 5.3-7a; and in Chapter 2, making a minor editorial change in Section 2.6.12.1.

Consistent with NAC administrative practice, this proposed revision is numbered to uniquely identify the applicable changed pages. Revision bars mark the SAR text changes (on Revision LWT-07F pages) that are proposed. Upon final approval, the changed pages will be reformatted, assigned the next appropriate revision number, and incorporated into the NAC-LWT SAR. A List of Effective Pages for the complete SAR is included for clarity.

Timely approval of this amendment request will support the transport schedule of the U.S. Department of Energy National Nuclear Security Administration's (NNSA) Foreign Research Reactor (FRR) Program.

If you have any comments or questions, please contact me on my direct line at 678-328-1274.

Sincerely,

Anthony L. Patko
Director, Licensing
Engineering

Attachment 1 NAC-LWT Transport Cask SAR, Revision LWT-07F List of Drawing Changes

Enclosures

ATTACHMENT 1

NAC-LWT TRANSPORT CASK SAR, REVISION LWT-07F

LIST OF DRAWING CHANGES

Drawing 315-40-048, Revision 3 – Legal Weight Truck Transport Cask Assembly 42 MTR Element Safety Analysis Report

- Sheet 1, revise B.O.M. to add next items 10,11 and 12 as follows:
  - B.O.M. #10, Qty A/R, Cell Block Spacer, 315-40-85-97;
  - B.O.M. #11, Qty A/R, Axial Fuel Spacer, 315-40-85-98;
  - B.O.M. #12, Qty A/R, Plate Spacer, 315-40-85-99;
- Change the name of Item 9 to "Seal", was Metal Cup Seal.
- Add delta note 2 as follows "INSTALL CELL BLOCK SPACERS IN BASKET MODULE CELL POSITION #'s 1,2 AND 3 FOR THE TRANSPORT OF MTR FUEL ELEMENTS HAVING GREATER THAN 470g 235U PER ELEMENT" (OR >22g/PLATE).
- Add delta note 3 as follows: "INSTALL AXIAL FUEL SPACERS IN BASKET MODULE CELLS TO ADJUST FUEL ELEMENT HEIGHT AS REQUIRED TO FACILITATE FUEL ELEMENT HANDLING."
- Add delta note 4 as follows: "INSTALL PLATE SPACERS AT BASE AND TOP OF BASKET MODULE CELL AS REQUIRED TO ENSURE HEU MTR FUEL ELEMENTS (>380g 235U/ELEMENT) HAVE A MINIMUM OF 2.0 cm (0.8 inch) OF NON-FUEL MATERIAL AT THE ENDS OF EACH ELEMENT."
- Add note 5 as follows: "MAXIMUM WEIGHT OF FUEL ASSEMBLY, SPACERS AND DAMAGED FUEL CANS, AS APPLICABLE, SHALL BE 80 LB. PER BASKET MODULE CELL."

Drawing 315-40-052, Revision 3 – Legal Weight Truck Transport Cask Assembly 28 MTR Element Safety Analysis Report

- Sheet 1, revise B.O.M. to add next items 10,11 and 12 as follows:
  - B.O.M. #10, Qty A/R, Cell Block Spacer, 315-40-85-97;
  - B.O.M. #11, Qty A/R, Axial Fuel Spacer, 315-40-85-98;
  - B.O.M. #12, Qty A/R, Plate Spacer, 315-40-85-99;
- Change the name of Item 9 to "Seal", was Metal Cup Seal.
- Add delta note 2 as follows "INSTALL CELL BLOCK SPACERS IN BASKET MODULE CELL POSITION #'s 1,2 AND 3 FOR THE TRANSPORT OF MTR FUEL ELEMENTS HAVING GREATER THAN 470g 235U PER ELEMENT" (OR >22g/PLATE).
- Add delta note 3 as follows: "INSTALL AXIAL FUEL SPACERS IN BASKET MODULE CELLS TO ADJUST FUEL ELEMENT HEIGHT AS REQUIRED TO FACILITATE FUEL ELEMENT HANDLING."
- Add delta note 4 as follows: "INSTALL PLATE SPACERS AT BASE AND TOP OF BASKET MODULE CELL AS REQUIRED TO ENSURE HEU MTR FUEL ELEMENTS (>380g 235U/ELEMENT) HAVE A MINIMUM OF 2.0 cm (0.8 inch) OF NON-FUEL MATERIAL AT THE ENDS OF EACH ELEMENT."
- Add note 5 as follows: "MAXIMUM WEIGHT OF FUEL ASSEMBLY, SPACERS AND DAMAGED FUEL CANS, AS APPLICABLE, SHALL BE 80 LB. PER BASKET MODULE CELL."

Drawing 315-40-079, Revision 3 – Legal Weight Truck Transport Cask Assembly TRIGA Fuel Safety Analysis Report

- Sheet 1, revise B.O.M. to add items 10 and 11 as follows:
  - B.O.M. #10, Qty A/R, Axial Fuel Spacer, 315-40-85-98;
  - B.O.M. #11, Qty A/R, Fuel Rod Insert, 315-40-096-99;
- Change the name of Item 9 to "Seal", was Metal Cup Seal.
- Add delta note 2 as follows: "INSTALL AXIAL FUEL SPACERS IN BASKET MODULE CELLS TO ADJUST FUEL ELEMENT HEIGHT AS REQUIRED TO FACILITATE FUEL ELEMENT HANDLING."
- Add note 3 as follows: "MAXIMUM WEIGHT OF FUEL ASSEMBLY, SPACERS, INSERTS AND DAMAGED FUEL CANS, AS APPLICABLE, SHALL BE 80 LB. PER BASKET MODULE CELL."
- Add delta note 4 as follows: "ITEM 11 FUEL ROD INSERT, SHALL BE USED FOR THE LOADING OF TRIGA FUEL CANISTER RODS. AXIAL SPACERS ARE REQUIRED IF FUEL ROD INSERTS ARE TO BE INSTALLED IN THE TOP BASKET MODULE (ITEM 6)."

Drawing 315-40-094, Revision 4 – Legal Weight Truck Transport Cask Assembly 35 MTR Element

- Sheet 1, revise B.O.M. to add next items 10,11 and 12 as follows:
  - B.O.M. #10, Qty A/R, Cell Block Spacer, 315-40-85-97;
  - B.O.M. #11, Qty A/R, Axial Fuel Spacer, 315-40-85-98;
  - B.O.M. #12, Qty A/R, Plate Spacer, 315-40-85-99;
- Change the name of Item 9 to "Seal", was Metal Cup Seal.
- Add delta note 2 as follows "INSTALL CELL BLOCK SPACERS IN BASKET MODULE CELL POSITION #'s 1, 2 AND 3 FOR THE TRANSPORT OF MTR FUEL ELEMENTS HAVING GREATER THAN 470g 235U PER ELEMENT" (OR >22g/PLATE).
- Add delta note 3 as follows: "INSTALL AXIAL FUEL SPACERS IN BASKET MODULE CELLS TO ADJUST FUEL ELEMENT HEIGHT AS REQUIRED TO FACILITATE FUEL ELEMENT HANDLING".
- Add delta note 4 as follows: "INSTALL PLATE SPACERS AT BASE AND TOP OF BASKET MODULE CELL AS REQUIRED TO ENSURE HEU MTR FUEL ELEMENTS (>380g 235U/ELEMENT) HAVE A MINIMUM OF 2.0 cm (0.8 inch) OF NON-FUEL MATERIAL AT THE ENDS OF EACH ELEMENT".
- Add note 5 as follows: "MAXIMUM WEIGHT OF FUEL ASSEMBLY, SPACERS AND DAMAGED FUEL CANS, AS APPLICABLE, SHALL BE 80 LB. PER BASKET MODULE CELL"

NAC INTERNATIONAL

RESPONSE TO THE

UNITED STATES
NUCLEAR REGULATORY COMMISSION

REQUEST FOR ADDITIONAL INFORMATION

SEPTEMBER 13, 2007

LEGAL WEIGHT TRUCK CASK (NAC-LWT)

LEU MTR FUEL AMENDMENT FOR PETTEN

(TAC NO. l24083, DOCKET NO. 71-9225)

OCTOBER 2007

TABLE OF CONTENTS

NAC-LWT LEU MTR FUEL RAI RESPONSES

CHAPTER 1 GENERAL INFORMATION 3

CHAPTER 5 SHIELDING 7

CHAPTER 6 CRITICALITY 8

CHAPTER 7 OPERATING PROCEDURES 13

CHAPTER 1 GENERAL INFORMATION

1-1 Provide evaluations of the structural, thermal and containment effects on the packages due to the increased U-235 content and addition of axial and cell spacers.

The change of package contents and the addition of spacers will alter the package design. Reevaluations of the structural, thermal, containment, shielding, and criticality safety, as well as operating procedures must be included in the SAR, though some of the effects might be limited. A complete SAR is the basis for the staff to evaluate if the packages meet the safety regulatory requirements.

This information is needed for the staff to perform confirmatory analyses for the structural, thermal, shielding, and criticality safety requirements pursuant to 10 CFR 71.31, 71.33, 71.43, 71.47, 71.51, 71.55, 71.59, 71.71, and 71.73.

NAC International Response

NAC has revised the SAR to add a discussion of the revised package contents, and the use of axial fuel and plate spacers, or basket cell block spacers to Chapter 1 – General Information, and to the structural, thermal, containment, shielding, and criticality safety evaluation chapters, as appropriate. In addition, a new drawing has been prepared and submitted to define the materials of construction and dimensions of the various spacer designs. Also, the applicable NAC-LWT Transport Cask Assembly Drawings for MTR and TRIGA fuels have been revised to incorporate notes, as appropriate, for the proper use and installation of axial and cell blocking spacers for the various content loading conditions.

Chapter 7 – Operating Procedures has also been revised to incorporate appropriate precautions and conditions for use of axial and cell block spacers for MTR and TRIGA fuel elements, and to clarify the administrative controls and independent verifications utilized to ensure that the MTR fuel element basket modules are correctly loaded.

CHAPTER 1 GENERAL INFORMATION

1-2 Provide licensing drawings to capture the design details, such as the dimensions and material compositions of the various spacers that are to be used in different MTR fuel package loading configurations.

On page 1.2-34 of the application, in Figure 1.2-18, the applicant provides only a schematic drawing of the spacers, which lacks necessary details for a safety evaluation of the package.

This information is needed for the staff to perform confirmatory analyses for the structure, thermal, shielding, and criticality safety requirements pursuant to 10 CFR 71.31, 71.33, 71.43, 71.47, 71.51, 71.55, 71.59, 71.71, and 71.73.

NAC International Response

A new drawing, (Drawing 315-40-085, Rev. 0), has been prepared and submitted to define the materials of construction and dimensions of the various axial fuel and cell block spacer designs. Figure 1.2-18 has been deleted from the SAR. The new drawing provides sufficient information on the materials of construction and dimensions to allow an evaluation of the function and adequacy of the spacers.

As described in the SAR, the axial fuel and cell block spacers do not perform a safety function and act as dunnage to axially position a fuel assembly for handling purposes, or to prevent the inadvertent loading of a fuel element in a fuel basket module cell.

The applicable NAC-LWT Transport Cask Assembly Drawings for MTR and TRIGA fuel contents have been revised to incorporate notes, as appropriate, for the proper use and installation of axial and cell blocking spacers for the various content loading conditions.

CHAPTER 1 GENERAL INFORMATION

1-3 Provide information on the locations where the axial spacers are to be used.

On page 1.2-11 of the application, the applicant states: "Axial spacers and plates may be used to properly position the MTR elements axially in the basket to facilitate fuel loading and handling, and to meet [the] minimum nonfuel hardware specifications." Provide any detailed information on the use of the axial spacers in the application.

No axial spacers were shown in figure 6.3.3-5, which shows how the cask will be loaded. Cell spacers are used only in MTR fuel canister cells 1, 2, and 3 to prevent an accidental loading of these cells for criticality safety.

This information is needed for the staff to perform confirmatory analyses for the package safety requirements pursuant to 10 CFR71.31, 71.33, 71.43, 71.47, 71.51, 71.55, 71.59, 71.71, and 71.73.

NAC International Response

As noted in the response to RAI question 1-2, a new drawing, (Drawing 315-40-085, Rev. 0), has been prepared and submitted to define the materials of construction and dimensions of the various axial fuel and cell block spacer designs. Additionally, the NAC-LWT transport cask assembly drawings for the MTR and TRIGA fuel content conditions have been revised to identify the proper use and positioning of the fuel spacers, when required.

Figure 6.3.3-5 is a MTR fuel basket module loading diagram and is used to identify which specific MTR fuel element, by identification number, will be loaded into each basket module. The figure is not intended to describe or limit what is placed in an actual MTR fuel basket assembly in a NAC-LWT cask for transport. These content and component assemblies are provided on the transport cask assembly drawings described previously.

NAC International Response 1-3, continued

The complete set of procedures for fuel selection, identification, verification and control of MTR basket module loading are provided in Section 7.1.4 and 7.1.5 of Chapter 7 – Operating Procedures. As noted in these sections, in addition to the use of the cell block spacers in cell positions 1, 2 and 3 to prevent the loading of LEU MTR fuel elements containing greater than 470 g of ^{235}U, axial fuel or plate spacers may be used to axially position the fuel assemblies, when requested by the loading or unloading facility, or if required to satisfy the 2.0 cm of non-fuel hardware condition of the CoC for HEU MTR fuel elements containing greater than 380 g of ^{235}U.

CHAPTER 5 SHIELDING

5-1 Clarify if the source terms of the 100 gram cadmium wires vary from fuel element to fuel element or they all have the same source and energy strengths. If the source terms are variable, explain how these various source terms are modeled in the shielding calculations.

In addition, provide information on the source strength of the cadmium wire(s). Explain why the same amount (100 grams) of cadmium have different source strengths if the statement "a maximum source magnitude at any energy line of less than 0.1% of the corresponding fuel source line" is true. These statements appear to conflict because one is an absolute limit, while the other is a proportional limit.

On page 1.2-1 of the application for request for amendment LWT-07B, the applicant states that MTR elements/plates may contain cadmium wires and a maximum 100 gram cadmium source is addressed in the shielding evaluations documented in Chapter 5. However, the only place in Chapter 5 that discusses the cadmium wire source term is in a note to Table 5.1-3 on page 5.1-14. In the note, the applicant states that activated cadmium wires may be included as part of the MTR fuel element or plate construction. A 100 gram Cadmium light element source was evaluated. The Cadmium inclusion resulted in a maximum source magnitude at any energy line of less than 0.1% of the corresponding fuel source line. The source is, therefore, not significant for further shielding analysis consideration.

This information is needed for the staff to perform confirmatory analyses of the shielding safety requirements pursuant to 10 CFR 71.47, 71.71 and 71.73.

NAC International Response

Section 5.3.4, the SAR section that contains the MTR source and shielding evaluation, is revised to include specific information on the cadmium hardware activation source. The revised section contains the comparison tables supporting the assertion that the cadmium addition does not significantly affect the MTR shielding analysis results. The footnote to Table 5.1-3 is modified to point to Section 5.3.4 for further information on the cadmium activation.

CHAPTER 6 CRITICALITY

6-1 Provide the CSI values for the MTR spent fuel transportation packages that contain increased U-235 content and aluminum spacers.

The application for request for amendment does not provide the CSI values for the MTR spent fuel transportation packages that contain various increased U-235 content and aluminum spacers.

This information is needed for the staff to perform confirmatory analyses for the package safety requirements pursuant to 10 CFR 71.59, 71.71, and 71.73.

NAC International Response

The CSI for all MTR fuel contents is 0, as indicated in Section 6.0, page 6-1, of the SAR. Note that an editorial error occurred in a previous revision of the SAR modifying the apparent CSI to 25 for various payloads including MTR fuel. This editorial error was corrected by NAC and reviewed by NRC staff during the TRIGA supplement review (NAC-LWT 07A), but not consolidated into the MTR submittal. To provide the correct CSI for MTR fuel, the previously corrected text is included as part of this RAI response.

All MTR payloads are evaluated for normal and accident conditions in an infinite cask array configuration and, therefore, qualify for a CSI of 0. Section 6.4.3.15 is added to the MTR analysis results section to include this statement.

CHAPTER 6 CRITICALITY

6-2 Provide an engineering drawing for the various spacers that are to be used in different MTR fuel package loading configurations.

On page 1.2-34 of the application, in Figure 1.2-18, the applicant provides a schematic drawing of the spacers. The figure, however, does not provide sufficient information for structural analysis, i.e., if the spacers have sufficient strength to prevent space reduction between fuel canisters in both radial and axial directions during Hypothetical Accident Condition events.

This information is needed for the staff to perform confirmatory analyses for the structure, thermal, shielding and criticality safety requirements pursuant to 10 CFR 71.31, 71.33, 71.43, 71.47, 71.51, 71.55, 71.59, 71.71, and 71.73.

NAC International Response

Drawings for the relevant spacers are included as a response to RAI 1-2. Note that with the exception of the spacer plate, designed to separate the active fuel to the 4 cm value employed in the criticality analysis, all remaining spacers are handling spacers only, and are considered dunnage and serve no safety function. The spacer plate offers the possibility to compensate for an element cut short during element cropping operations.

CHAPTER 6 CRITICALITY

6-3 Provide clarification on the maximum U-235 content on page 6.2-7 of the application.

In the application, on page 6.2-7 of LWT-07B, the applicant states: "... and LEU specific loads up to 736 grams ^{235}U (32 grams per plate in 23 plates)." This number for the maximum U-235 content is in conflict with that in the rest of the application.

This information is needed for the staff to perform confirmatory analyses of the criticality safety requirements pursuant to 10 CFR 71.

NAC International Response

Page 6.2-7 is revised to clarify that the criticality analysis is conservatively based on a 23-plate configuration containing 32g ^{235}U per plate and, therefore, totaling 736 grams. The shielding analysis is based on a maximum 640g ^{235}U mass. The requested amendment is, therefore, for a maximum ^{235}U content of 32 grams per plate with a maximum element content of 640g ^{235}U. Criticality analysis for MTR fuel elements has demonstrated that increasing the number of plates, at a fixed fissile material mass per plate, results in higher system reactivities and is, therefore, conservative.

Note that this approach is similar to the one currently presented in the NAC-LWT SAR and CoC. For example, the MTR LEU payload is limited to 23 plates at 22g ^{235}U per plate (506g ^{235}U total) from the criticality analysis, while shielding evaluations limited the total ^{235}U content to 470g. The combination of 23 plates, 22g ^{235}U per plate, and 470g ^{235}U per element was, therefore, applied in the NAC-LWT CoC.

CHAPTER 6 CRITICALITY

6-4 (a) Provide discussion on the fundamental assumptions of the Dancoff correction for rod shadowing effect and its relevance to the plate fuel basket configurations.

(b) Provide a discussion on the applicability of the Dancoff factor to array of slabs such as the MTR fuel baskets.

(c) Provide a discussion on the applicability of the Dancoff factors extracted from LATTICECELL calculations to the MTR fuel baskets given the fuel loading pattern and geometry.

(d) Provide a discussion on whether the use of Dancoff correction factor will result in a more or less conservative K_{eff} result for the sandwich plate MTR fuels in the baskets of the MTR fuel transport packages, in particular. Please reference, in the discussion, the NRC Information Notice 2005-31.

In the application for request for amendment LWT-07B, on page 6.3-12, the applicant states: "For baskets containing multiple fuel types, the SCALE material information processor input DAN and RES variables are provided for the fuel material not included in the LATTICECELL description. The Dancoff factors are extracted from LATTICECELL calculations of the single fuel type runs." A detailed explanation of the applicability of the Dancoff correction for this type of fuel load configuration is needed to justify the applicant's position.

This information is needed for the staff to perform confirmatory analyses of the criticality safety requirements pursuant to 10 CFR 71.55, 71.59, 71.71 and 71.73.

NAC International Response

The Dancoff factor referred to in the text is calculated within SCALE 4.3. SCALE 4.3 was designed to perform cross-section processing on a single lattice type. As two types are used in the high mass evaluations, the Dancoff correction factor is extracted from a SCALE 4.3 single fuel type run and copied to the dual fuel case using the Dancoff input option. (This approach is discussed in Section 6.3.3.1 of the SAR). SCALE 4.3 contains an option to

NAC International Response 6-4, continued

calculate the Dancoff factor for SLAB cell geometry, such as MTR fuel plates, as discussed in the Material Information Processor Section of the SCALE manual. Relevant assumptions are included in this section of the manual.

NAC included in the initial submittal a sample input file, (Figure 6.6.14-1), containing the Dancoff input option. Enclosed with this RAI response is a CD containing the input and SCALE 4.3 output files used to generate the Material 10 Dancoff correction factor for the MTR fuel plate element that was not included in the LATTICECELL card of the input provided in Figure 6.6.14-1 of the amendment request. The plate geometry in the attached file (a 0.123-cm plate with a 0.83-cm core, pitched at 0.3914 cm) matches the fuel geometry used in the UNIT 1 (Material 10) fuel plate description of Figure 6.6.14-1.

The exact value of the Dancoff factor changes among the various fuel configurations evaluated. The run on the enclosed CD matches the sample case provided in Figure 6.6.14-1.

SCALE 4.3 is the basis of all MTR evaluations, including the current high mass submittal. The RIS referred to in RAI 6-4(d) is related to SCALE 5 input issues. As part of the RAI process, NAC modified the MTR SAR Sections 6.4.3 and 6.4.3.11 to include the SCALE version used (SCALE 4.3).

CHAPTER 7 OPERATING PROCEDURES

7-1 Provide justification on the adequacy of the administrative procedures for preventing misloading of cells 1, 2, and 3 for the 640 gram U-235 MTR spent fuel cells.

In Sections 7.1.5.1, 7.1.5.2, and 7.1.5.3, of the application, the applicant provided specific loading procedures to prevent misloading of the higher mass U-235 baskets into cells 1, 2, and 3. However, misloading may still occur even if the procedure is clear because of operational error or an overlook. An engineered safety feature seems to be necessary to physically prevent cells 1, 2, and 3 from being inadvertently loaded. The combination of engineered safety features and procedures will provide assurance that cell misloading will not be possible.

This information is needed for the staff to perform confirmatory analyses of the criticality safety requirements pursuant to 10 CFR 71.55, 71.59, 71.71, and 71.73.

NAC International Response

As noted in the Responses to RAIs 1-1 and 1-3, Chapter 7 – Operating Procedures has been revised to clarify and expand the procedural requirements to describe the independent verifications that are performed prior to and during the fuel basket module loading process to ensure that only fuel contents authorized by the CoC are loaded, and are loaded with the correct conditions, i.e., use of cell block spacers for certain LEU MTR fuel elements, use of axial spacer plate(s) when required to meet the 2.0 cm non-fuel hardware condition for certain HEU MTR fuel elements, and use of a plate container for individual plates, etc.

The described procedures, independent verifications, and the use of cell block spacers ensure that a single error will not result in the misloading of a MTR fuel element basket module. Therefore, additional engineered safety features are not required or provided.

October 2007

Revision LWT-07F

NAC-LWT

Legal Weight Truck Cask System

SAFETY ANALYSIS REPORT

Docket No. 71-9225

NAC INTERNATIONAL

Atlanta Corporate Headquarters: 3930 East Jones Bridge Road, Norcross, Georgia 30092 USA
Phone 770-447-1144, Fax 770-447-1797, www.nacintl.com

List of Effective Pages

LIST OF EFFECTIVE PAGES

Chapter 1

1-i ..... ANSTO/TPBAR Revision
1-ii ..... Revision LWT-07F
1-iii ..... Revision LWT-07F
1-iv ..... ANSTO/TPBAR Revision
1-1 ..... Revision LWT-07F
1-2 ..... ANSTO/TPBAR Revision
1-3 ..... ANSTO/TPBAR Revision
1-4 ..... ANSTO/TPBAR Revision
1.1-1 ..... ANSTO/TPBAR Revision
1.1-2 ..... ANSTO/TPBAR Revision
1.2-1 ..... Revision 36
1.2-2 ..... Revision 36
1.2-3 ..... ANSTO/TPBAR Revision
1.2-4 ..... ANSTO/TPBAR Revision
1.2-5 ..... ANSTO/TPBAR Revision
1.2-6 ..... Revision LWT-07B
1.2-7 ..... ANSTO/TPBAR Revision
1.2-8 ..... Revision LWT-07F
1.2-9 ..... Revision LWT-07F
1.2-10 ..... Revision LWT-07F
1.2-11 ..... Revision LWT-07F
1.2-12 ..... Revision LWT-07F
1.2-13 ..... Revision LWT-07F
1.2-14 ..... Revision LWT-07F
1.2-15 ..... Revision LWT-07F
1.2-16 ..... Revision LWT-07F
1.2-17 .... ANSTO/TPBAR Revision
1.2-18 .... ANSTO/TPBAR Revision
1.2-19 .... ANSTO/TPBAR Revision
1.2-20 .... ANSTO/TPBAR Revision
1.2-21 .... ANSTO/TPBAR Revision
1.2-22 .... ANSTO/TPBAR Revision
1.2-23 .... ANSTO/TPBAR Revision
1.2-24 .... ANSTO/TPBAR Revision
1.2-25 .... ANSTO/TPBAR Revision
1.2-26 .... ANSTO/TPBAR Revision
1.2-27 .... ANSTO/TPBAR Revision
1.2-28 .... ANSTO/TPBAR Revision
1.2-29 .... ANSTO/TPBAR Revision
1.2-30 .... ANSTO/TPBAR Revision
1.2-31 .... ANSTO/TPBAR Revision
1.2-32 .... ANSTO/TPBAR Revision
1.2-33 .... ANSTO/TPBAR Revision
1.2-34 ..... Revision LWT-07D
1.2-35 ..... Revision LWT-07D
1.2-36 ..... Revision LWT-07D
1.2-37 ..... Revision LWT-07F
1.2-38 ..... Revision LWT-07F
1.2-39 ..... Revision LWT-07D
1.2-40 ..... Revision LWT-07D
1.2-41 ..... Revision LWT-07D
1.2-42 ..... Revision LWT-07D
1.2-43 ..... Revision LWT-07D
1.2-44 ..... Revision LWT-07D
1.2-45 ..... Revision LWT-07D
1.2-46 ..... Revision LWT-07D
1.2-47 ..... Revision LWT-07D
1.3-1 ..... Revision 36
1.4-1 ..... Revision 36
1.5-1 ..... ANSTO/TPBAR Revision

Chapter 1 Appendices 1-A
through 1-G

75 drawings in the
Chapter 1 List of Drawings

LIST OF EFFECTIVE PAGES (Continued)

Chapter 2

2-i ..... Revision 36
2-ii ..... Revision 36
2-iii ..... ANSTO/TPBAR Revision
2-iv ..... ANSTO/TPBAR Revision
2-v ..... ANSTO/TPBAR Revision
2-vi ..... ANSTO/TPBAR Revision
2-vii ..... ANSTO/TPBAR Revision
2-viii ..... Revision 36
2-ix ..... Revision 37
2-x ..... ANSTO/TPBAR Revision
2-xi ..... Revision 37
2-xii ..... Revision 37
2-xiii ..... Revision 37
2-xiv ..... Revision 37
2-xv ..... Revision 36
2-xvi ..... Revision 36
2-xvii ..... Revision 37
2-xviii ..... Revision 36
2-xix ..... Revision 36
2-xx ..... Revision 36
2-xxi ..... Revision 36
2-xxii ..... Revision 36
2-xxiii ..... Revision 36
2-xxiv ..... Revision 36
2-xxv ..... Revision 36
2-xxvi ..... Revision 36
2-xxvii ..... Revision 36
2-xxviii ..... Revision 36
2-xxix ..... Revision 36
2-1 ..... Revision 36
2.1.1-1 ..... Revision 36
2.1.1-2 ..... Revision 36
2.1.1-3 ..... Revision 36
2.1.2-1 ..... Revision 36
2.1.2-2 ..... Revision 36
2.1.2-3 ..... Revision 36
2.1.3-1 ..... Revision 36
2.1.3-2 ..... Revision 36
2.1.3-3 ..... Revision 36
2.1.3-4 ..... Revision 36
2.1.3-5 ..... Revision 36
2.1.3-6 ..... Revision 36
2.1.3-7 ..... Revision 36
2.1.3-8 ..... Revision 36
2.1.3-9 ..... Revision 36
2.2-1 ..... Revision 36
2.2-2 ..... ANSTO/TPBAR Revision
2.2-3 ..... ANSTO/TPBAR Revision
2.3-1 ..... Revision 36
2.3.1-1 ..... Revision 36
2.3.1-2 ..... Revision 36
2.3.1-3 ..... Revision 36
2.3.1-4 ..... Revision 36
2.3.1-5 ..... Revision 36
2.3.1-6 ..... Revision 36
2.3.1-7 ..... Revision 36
2.3.1-8 ..... Revision 36
2.3.1-9 ..... Revision 36
2.3.1-10 ..... Revision 36
2.3.1-11 ..... Revision 36
2.3.1-12 ..... Revision 36
2.3.1-13 ..... Revision 36
2.3.1-14 ..... Revision 36
2.4-1 ..... Revision 36
2.4.1-1 ..... Revision 36
2.4.2-1 ..... Revision 36
2.4.3-1 ..... Revision 36
2.4.4-1 ..... Revision 36

LIST OF EFFECTIVE PAGES (Continued)

2.4.5-1 ..... Revision 36
2.4.6-1 ..... Revision 36
2.5.1-1 ..... Revision 36
2.5.1-2 ..... Revision 36
2.5.1-3 ..... Revision 36
2.5.1-4 ..... Revision 36
2.5.1-5 ..... Revision 36
2.5.1-6 ..... Revision 36
2.5.1-7 ..... Revision 36
2.5.1-8 ..... Revision 36
2.5.1-9 ..... Revision 36
2.5.1-10 ..... Revision 36
2.5.1-11 ..... Revision 36
2.5.1-12 ..... Revision 36
2.5.2-1 ..... Revision 36
2.5.2-2 ..... Revision 36
2.5.2-3 ..... Revision 36
2.5.2-4 ..... Revision 36
2.5.2-5 ..... Revision 36
2.5.2-6 ..... Revision 36
2.5.2-7 ..... Revision 36
2.5.2-8 ..... Revision 36
2.5.2-9 ..... Revision 36
2.5.2-10 ..... Revision 36
2.5.2-11 ..... Revision 36
2.5.2-12 ..... Revision 36
2.5.2-13 ..... Revision 36
2.5.2-14 ..... Revision 36
2.5.2-15 ..... Revision 36
2.5.2-16 ..... Revision 36
2.5.2-17 ..... Revision 36
2.5.2-18 ..... Revision 36
2.5.2-19 ..... Revision 36
2.5.2-20 ..... Revision 36
2.6.1-1 ..... Revision 36
2.6.1-2 ..... Revision 36
2.6.1-3 ..... Revision 36
2.6.1-4 ..... Revision 36
2.6.1-5 ..... Revision 37
2.6.1-6 ..... Revision 37
2.6.1-7 ..... Revision 37
2.6.2-1 ..... Revision 36
2.6.2-2 ..... Revision 36
2.6.2-3 ..... Revision 36
2.6.2-4 ..... Revision 36
2.6.2-5 ..... Revision 37
2.6.2-6 ..... Revision 37
2.6.2-7 ..... Revision 37
2.6.3-1 ..... Revision 36
2.6.4-1 ..... Revision 36
2.6.5-1 ..... Revision 36
2.6.5-2 ..... Revision 36
2.6.6-1 ..... Revision 36
2.6.7-1 ..... Revision 36
2.6.7-2 ..... Revision 36
2.6.7-3 ..... Revision 36
2.6.7-4 ..... Revision 36
2.6.7-5 ..... Revision 36
2.6.7-6 ..... Revision 36
2.6.7-7 ..... Revision 36
2.6.7-8 ..... Revision 36
2.6.7-9 ..... Revision 36
2.6.7-10 ..... Revision 36
2.6.7-11 ..... Revision 36
2.6.7-12 ..... Revision 36
2.6.7-13 ..... Revision 36
2.6.7-14 ..... Revision 36
2.6.7-15 ..... Revision 36
2.6.7-16 ..... Revision 36
2.6.7-17 ..... Revision 36

LIST OF EFFECTIVE PAGES (Continued)

2.6.7-18 ..... Revision 36
2.6.7-19 ..... Revision 36
2.6.7-20 ..... Revision 36
2.6.7-21 ..... Revision 36
2.6.7-22 ..... Revision 36
2.6.7-23 ..... Revision 36
2.6.7-24 ..... Revision 36
2.6.7-25 ..... Revision 36
2.6.7-26 ..... Revision 36
2.6.7-27 ..... Revision 36
2.6.7-28 ..... Revision 36
2.6.7-29 ..... Revision 36
2.6.7-30 ..... Revision 36
2.6.7-31 ..... Revision 36
2.6.7-32 ..... Revision 36
2.6.7-33 ..... Revision 36
2.6.7-34 ..... Revision 36
2.6.7-35 ..... Revision 36
2.6.7-36 ..... Revision 36
2.6.7-37 ..... Revision 36
2.6.7-38 ..... Revision 36
2.6.7-39 ..... Revision 36
2.6.7-40 ..... Revision 36
2.6.7-41 ..... Revision 36
2.6.7-42 ..... Revision 36
2.6.7-43 ..... Revision 36
2.6.7-44 ..... Revision 36
2.6.7-45 ..... Revision 36
2.6.7-46 ..... Revision 36
2.6.7-47 ..... Revision 36
2.6.7-48 ..... Revision 36
2.6.7-49 ..... Revision 36
2.6.7-50 ..... Revision 36
2.6.7-51 ..... Revision 36
2.6.7-52 ..... Revision 36
2.6.7-53 ..... Revision 36
2.6.7-54 ..... Revision 36
2.6.7-55 ..... Revision 36
2.6.7-56 ..... Revision 36
2.6.7-57 ..... Revision 36
2.6.7-58 ..... Revision 36
2.6.7-59 ..... Revision 36
2.6.7-60 ..... Revision 36
2.6.7-61 ..... Revision 36
2.6.7-62 ..... Revision 36
2.6.7-63 ..... Revision 36
2.6.7-64 ..... Revision 36
2.6.7-65 ..... Revision 36
2.6.7-66 ..... Revision 36
2.6.7-67 ..... Revision 36
2.6.7-68 ..... Revision 36
2.6.7-69 ..... Revision 36
2.6.7-70 ..... Revision 36
2.6.7-71 ..... Revision 36
2.6.7-72 ..... Revision 36
2.6.7-73 ..... Revision 36
2.6.7-74 ..... Revision 36
2.6.7-75 ..... Revision 36
2.6.7-76 ..... Revision 36
2.6.7-77 ..... Revision 36
2.6.7-78 ..... Revision 36
2.6.7-79 ..... Revision 36
2.6.7-80 ..... Revision 36
2.6.7-81 ..... Revision 36
2.6.7-82 ..... Revision 36
2.6.7-83 ..... Revision 36
2.6.7-84 ..... Revision 36
2.6.7-85 ..... Revision 36
2.6.7-86 ..... Revision 36
2.6.7-87 ..... Revision 36

LIST OF EFFECTIVE PAGES (Continued)

2.6.7-88 ..... Revision 36
2.6.7-89 ..... Revision 36
2.6.7-90 ..... Revision 36
2.6.7-91 ..... Revision 36
2.6.7-92 ..... Revision 36
2.6.7-93 ..... Revision 36
2.6.7-94 ..... Revision 36
2.6.7-95 ..... Revision 36
2.6.7-96 ..... Revision 36
2.6.7-97 ..... Revision 36
2.6.7-98 ..... Revision 36
2.6.7-99 ..... Revision 36
2.6.7-100 ..... Revision 36
2.6.7-101 ..... Revision 36
2.6.7-102 ..... Revision 36
2.6.7-103 ..... Revision 36
2.6.7-104 ..... Revision 36
2.6.7-105 ..... Revision 36
2.6.7-106 ..... Revision 36
2.6.7-107 ..... Revision 36
2.6.7-108 ..... Revision 37
2.6.7-109 ..... Revision 37
2.6.7-110 ..... Revision 37
2.6.7-111 ..... Revision 37
2.6.7-112 ..... Revision 37
2.6.7-113 ..... Revision 37
2.6.7-114 ..... Revision 37
2.6.7-115 ..... Revision 37
2.6.7-116 ..... Revision 37
2.6.7-117 ..... Revision 37
2.6.7-118 ..... Revision 37
2.6.7-119 ..... Revision 37
2.6.7-120 ..... Revision 37
2.6.7-121 ..... Revision 37
2.6.7-122 ..... Revision 37
2.6.7-123 ..... Revision 37
2.6.7-124 ..... Revision 37
2.6.7-125 ..... Revision 37
2.6.7-126 ..... Revision 37
2.6.7-127 ..... Revision 37
2.6.7-128 ..... Revision 37
2.6.7-129 ..... Revision 37
2.6.7-130 ..... Revision 37
2.6.7-131 ..... Revision 37
2.6.7-132 ..... Revision 37
2.6.7-133 ..... Revision 37
2.6.7-134 ..... Revision 37
2.6.7-135 ..... Revision 37
2.6.7-136 ..... Revision 37
2.6.7-137 ..... Revision 37
2.6.7-138 ..... Revision 37
2.6.7-139 ..... Revision 36
2.6.7-140 ..... Revision 36
2.6.7-141 ..... Revision 36
2.6.7-142 ..... Revision 36
2.6.7-143 ..... Revision 36
2.6.7-144 ..... Revision 36
2.6.7-145 ..... Revision 36
2.6.7-146 ..... Revision 36
2.6.7-147 ..... Revision 36
2.6.7-148 ..... Revision 36
2.6.7-149 ..... Revision 36
2.6.8-1 ..... Revision 36
2.6.9-1 ..... Revision 36
2.6.10-1 ..... Revision 36
2.6.10-2 ..... Revision 36
2.6.10-3 ..... Revision 36
2.6.10-4 ..... Revision 36
2.6.10-5 ..... Revision 36
2.6.10-6 ..... Revision 36

LIST OF EFFECTIVE PAGES (Continued)

2.6.10-7 ..... Revision 36
2.6.10-8 ..... Revision 36
2.6.10-9 ..... Revision 36
2.6.10-10 ..... Revision 36
2.6.10-11 ..... Revision 36
2.6.10-12 ..... Revision 36
2.6.10-13 ..... Revision 36
2.6.10-14 ..... Revision 36
2.6.10-15 ..... Revision 36
2.6.10-16 ..... Revision 36
2.6.10-17 ..... Revision 36
2.6.10-18 ..... Revision 36
2.6.11-1 ..... Revision 36
2.6.11-2 ..... Revision 36
2.6.11-3 ..... Revision 36
2.6.11-4 ..... Revision 36
2.6.11-5 ..... Revision 36
2.6.11-6 ..... Revision 36
2.6.11-7 ..... Revision 36
2.6.11-8 ..... Revision 36
2.6.11-9 ..... Revision 36
2.6.11-10 ..... Revision 36
2.6.11-11 ..... Revision 36
2.6.11-12 ..... Revision 36
2.6.11-13 ..... Revision 36
2.6.11-14 ..... Revision 36
2.6.11-15 ..... Revision 36
2.6.11-16 ..... Revision 36
2.6.12-1 ..... Revision LWT-07F
2.6.12-2 ..... Revision 36
2.6.12-3 ..... Revision 36
2.6.12-4 ..... Revision 36
2.6.12-5 ..... Revision 36
2.6.12-6 ..... Revision 36
2.6.12-7 ..... Revision 36
2.6.12-8 ..... Revision 36
2.6.12-9 ..... Revision LWT-07F
2.6.12-10 ..... Revision LWT-07F
2.6.12-11 ..... Revision LWT-07F
2.6.12-12 ..... Revision LWT-07F
2.6.12-13 ..... Revision LWT-07F
2.6.12-14 ..... Revision LWT-07F
2.6.12-15 ..... Revision 37
2.6.12-16 ..... Revision 37
2.6.12-17 ..... Revision 37
2.6.12-18 ..... Revision 37
2.6.12-19 ..... Revision 37
2.6.12-20 ..... Revision 37
2.6.12-21 ..... Revision 37
2.6.12-22 ..... Revision 37
2.6.12-23 ..... Revision 37
2.6.12-24 ..... Revision 37
2.6.12-25 ..... Revision 37
2.6.12-26 ..... Revision 37
2.6.12-27 ..... Revision 37
2.6.12-28 ..... Revision 37
2.6.12-29 ..... Revision 37
2.6.12-30 ..... Revision 37
2.6.12-31 ..... Revision 37
2.6.12-32 ..... Revision 37
2.6.12-33 ..... Revision 37
2.6.12-34 ..... Revision 37
2.6.12-35 ..... Revision 37
2.6.12-36 ..... Revision 37
2.6.12-37 ..... Revision 37
2.6.12-38 ..... Revision 37
2.6.12-39 ..... Revision 37
2.6.12-40 ..... Revision 37
2.6.12-41 ..... Revision 37
2.6.12-42 ..... Revision 37

LIST OF EFFECTIVE PAGES (Continued)

2.6.12-43 ..... Revision 37
2.6.12-44 ..... Revision 37
2.6.12-45 ..... Revision 37
2.6.12-46 ..... Revision 37
2.6.12-47 ..... Revision 37
2.6.12-48 ..... Revision 37
2.6.12-49 ..... Revision 37
2.6.12-50 ..... Revision 37
2.6.12-51 ..... Revision 37
2.6.12-52 ..... Revision 37
2.6.12-53 ..... Revision 37
2.6.12-54 ..... Revision 37
2.6.12-55 ..... Revision 37
2.6.12-56 ..... Revision 37
2.6.12-57 ..... Revision 37
2.6.12-58 ..... Revision 37
2.6.12-59 ..... Revision 37
2.6.12-60 ..... Revision 37
2.6.12-61 ..... Revision 37
2.6.12-62 ..... Revision 37
2.6.12-63 ..... Revision 37
2.6.12-64 ..... Revision 37
2.6.12-65 ..... Revision 37
2.6.12-66 ..... Revision 37
2.6.12-67 ..... Revision 37
2.6.12-68 ..... Revision 37
2.6.12-69 ..... Revision 37
2.6.12-70 ..... Revision 37
2.6.12-71 ..... Revision 37
2.6.12-72 ..... Revision 37
2.6.12-73 ..... Revision 37
2.6.12-74 ..... Revision 37
2.6.12-75 ..... Revision 37
2.6.12-76 ..... Revision 37
2.6.12-77 ..... Revision 37
2.6.12-78 ..... Revision 37
2.6.12-79 ..... Revision 37
2.6.12-80 ..... Revision 37
2.6.12-81 ..... Revision 37
2.6.12-82 ..... ANSTO/TPBAR Revision
2.6.12-83 ..... ANSTO/TPBAR Revision
2.6.12-84 ..... ANSTO/TPBAR Revision
2.6.12-85 ..... ANSTO/TPBAR Revision
2.6.12-86 ..... ANSTO/TPBAR Revision
2.6.12-87 ..... ANSTO/TPBAR Revision
2.6.12-88 ..... ANSTO/TPBAR Revision
2.6.12-89 ..... ANSTO/TPBAR Revision
2.6.12-90 ..... ANSTO/TPBAR Revision
2.6.12-91 ..... ANSTO/TPBAR Revision
2.6.12-92 ..... ANSTO/TPBAR Revision
2.6.12-93 ..... ANSTO/TPBAR Revision
2.6.12-94 ..... ANSTO/TPBAR Revision
2.6.12-95 ..... ANSTO/TPBAR Revision
2.6.12-96 ..... ANSTO/TPBAR Revision
2.6.12-97 ..... ANSTO/TPBAR Revision
2.6.12-98 ..... ANSTO/TPBAR Revision
2.6.12-99 ..... ANSTO/TPBAR Revision
2.6.12-100 ... ANSTO/TPBAR Revision
2.6.12-101 ... ANSTO/TPBAR Revision
2.6.12-102 ... ANSTO/TPBAR Revision
2.6.12-103 ... ANSTO/TPBAR Revision
2.6.12-104 ... ANSTO/TPBAR Revision
2.6.12-105 ... ANSTO/TPBAR Revision
2.6.12-106 ... ANSTO/TPBAR Revision
2.6.12-107 ... ANSTO/TPBAR Revision
2.7-1 ..... Revision 36
2.7.1-1 ..... Revision 36
2.7.1-2 ..... Revision 36
2.7.1-3 ..... Revision 36
2.7.1-4 ..... Revision 36

LIST OF EFFECTIVE PAGES (Continued)

2.7.1-5 ..... Revision 36
2.7.1-6 ..... Revision 36
2.7.1-7 ..... Revision 36
2.7.1-8 ..... Revision 36
2.7.1-19 ..... Revision 36
2.7.1-20 ..... Revision 36
2.7.1-21 ..... Revision 36
2.7.1-22 ..... Revision 36
2.7.1-23 ..... Revision 36
2.7.1-24 ..... Revision 36
2.7.1-25 ..... Revision 36
2.7.1-26 ..... Revision 36
2.7.1-27 ..... Revision 36
2.7.1-28 ..... Revision 36
2.7.1-29 ..... Revision 36
2.7.1-30 ..... Revision 36
2.7.1-31 ..... Revision 36
2.7.1-32 ..... Revision 36
2.7.1-33 ..... Revision 36
2.7.1-34 ..... Revision 36
2.7.1-35 ..... Revision 36
2.7.1-36 ..... Revision 36
2.7.1-37 ..... Revision 36
2.7.1-38 ..... Revision 36
2.7.1-39 ..... Revision 36
2.7.1-40 ..... Revision 36
2.7.1-41 ..... Revision 36
2.7.1-42 ..... Revision 36
2.7.1-43 ..... Revision 36
2.7.1-44 ..... Revision 36
2.7.1-45 ..... Revision 36
2.7.1-46 ..... Revision 36
2.7.1-47 ..... Revision 36
2.7.1-48 ..... Revision 36
2.7.1-49 ..... Revision 36
2.7.1-50 ..... Revision 36
2.7.1-51 ..... Revision 36
2.7.1-52 ..... Revision 36
2.7.1-53 ..... Revision 36
2.7.1-54 ..... Revision 36
2.7.1-55 ..... Revision 36
2.7.1-56 ..... Revision 36
2.7.1-57 ..... Revision 36
2.7.1-58 ..... Revision 36
2.7.1-59 ..... Revision 36
2.7.1-60 ..... Revision 36
2.7.1-61 ..... Revision 36
2.7.1-62 ..... Revision 36
2.7.1-63 ..... Revision 36
2.7.1-64 ..... Revision 37
2.7.1-65 ..... Revision 37
2.7.1-66 ..... Revision 37
2.7.1-67 ..... Revision 37
2.7.1-68 ..... Revision 37
2.7.1-69 ..... Revision 37
2.7.1-70 ..... Revision 37
2.7.1-71 ..... Revision 37
2.7.1-72 ..... Revision 37
2.7.1-73 ..... Revision 37
2.7.1-74 ..... Revision 37
2.7.1-75 ..... Revision 37
2.7.1-76 ..... Revision 37
2.7.1-77 ..... Revision 37
2.7.1-78 ..... Revision 37
2.7.1-79 ..... Revision 36
2.7.1-80 ..... Revision 37
2.7.1-81 ..... Revision 37
2.7.1-82 ..... Revision 37
2.7.1-83 ..... Revision 36
2.7.1-84 ..... Revision 36

LIST OF EFFECTIVE PAGES (Continued)

2.7.1-85 ..... Revision 36
2.7.1-86 ..... Revision 36
2.7.1-87 ..... Revision 37
2.7.1-88 ..... Revision 37
2.7.1-89 ..... Revision 37
2.7.1-90 ..... Revision 37
2.7.1-91 ..... Revision 37
2.7.1-92 ..... Revision 37
2.7.1-93 ..... Revision 37
2.7.1-94 ..... Revision 37
2.7.1-95 ..... Revision 37
2.7.1-96 ..... Revision 37
2.7.1-97 ..... Revision 37
2.7.1-98 ..... Revision 37
2.7.1-99 ..... Revision 37
2.7.1-100 ..... Revision 37
2.7.1-101 ..... Revision 37
2.7.1-102 ..... Revision 37
2.7.1-103 ..... Revision 37
2.7.1-104 ..... Revision 37
2.7.1-105 ..... Revision 37
2.7.1-106 ..... Revision 37
2.7.1-107 ..... Revision 37
2.7.1-108 ..... Revision 37
2.7.1-109 ..... Revision 37
2.7.1-110 ..... Revision 37
2.7.1-111 ..... Revision 37
2.7.1-112 ..... Revision 37
2.7.1-113 ..... Revision 37
2.7.1-114 ..... Revision 37
2.7.1-115 ..... Revision 37
2.7.1-116 ..... Revision 37
2.7.1-117 ..... Revision 37
2.7.1-118 ..... Revision 37
2.7.1-119 ..... Revision 37
2.7.1-120 ..... Revision 37
2.7.1-121 ..... Revision 37
2.7.1-122 ..... Revision 37
2.7.1-123 ..... Revision 36
2.7.1-124 ..... Revision 36
2.7.2-1 ..... Revision 36
2.7.2-2 ..... Revision 36
2.7.2-3 ..... Revision 36
2.7.2-4 ..... Revision 36
2.7.2-5 ..... Revision 36
2.7.2-6 ..... Revision 36
2.7.2-7 ..... Revision 36
2.7.2-8 ..... Revision 36
2.7.2-9 ..... Revision 36
2.7.2-10 ..... Revision 36
2.7.2-11 ..... Revision 36
2.7.2-12 ..... Revision 36
2.7.2-13 ..... Revision 36
2.7.2-14 ..... Revision 36
2.7.2-15 ..... Revision 36
2.7.2-16 ..... Revision 36
2.7.2-17 ..... Revision 36
2.7.2-18 ..... Revision 36
2.7.2-19 ..... Revision 36
2.7.2-20 ..... Revision 36
2.7.2-21 ..... Revision 36
2.7.2-22 ..... Revision 36
2.7.2-23 ..... Revision 36
2.7.2-24 ..... Revision 36
2.7.2-25 ..... Revision 36
2.7.2-26 ..... Revision 36
2.7.3-1 ..... Revision 36
2.7.3-2 ..... Revision 36
2.7.3-3 ..... Revision 36
2.7.3-4 ..... Revision 36

LIST OF EFFECTIVE PAGES (Continued)

2.7.3-5 ..... Revision 36
2.7.3-6 ..... Revision 36
2.7.4-1 ..... Revision 36
2.7.5-1 ..... Revision 36
2.7.5-2 ..... Revision 36
2.7.5-3 ..... Revision 36
2.7.5-4 ..... Revision 36
2.7.5-5 ..... Revision 36
2.7.5-6 ..... Revision 36
2.7.5-7 ..... Revision 36
2.7.6-1 ..... Revision 36
2.7.6-2 ..... Revision 36
2.7.6-3 ..... Revision 36
2.7.6-4 ..... Revision 36
2.7.7-1 ..... Revision LWT-07F
2.7.7-2 ..... Revision 36
2.7.7-3 ..... Revision 36
2.7.7-4 ..... Revision 36
2.7.7-5 ..... Revision 36
2.7.7-6 ..... Revision 36
2.7.7-7 ..... Revision 36
2.7.7-8 ..... Revision 37
2.7.7-9 ..... Revision LWT-07F
2.7.7-10 ..... Revision 37
2.7.7-11 ..... Revision 37
2.7.7-12 ..... Revision 37
2.7.7-13 ..... Revision 37
2.7.7-14 ..... Revision 37
2.7.7-15 ..... Revision 37
2.7.7-16 ..... Revision 37
2.7.7-17 ..... Revision 37
2.7.7-18 ..... Revision 37
2.7.7-19 ..... Revision 37
2.7.7-20 ..... Revision 37
2.7.7-21 ..... Revision 37
2.7.7-22 ..... Revision 37
2.7.7-23 ..... Revision 37
2.7.7-24 ..... Revision 37
2.7.7-25 ..... Revision 37
2.7.7-26 ..... Revision 36
2.7.7-27 ..... Revision 36
2.7.7-28 ..... Revision 36
2.7.7-29 ..... Revision 36
2.7.7-30 ..... Revision 36
2.7.7-31 ..... Revision 36
2.7.7-32 ..... Revision 36
2.7.7-33 ..... Revision 36
2.7.7-34 ..... Revision 36
2.7.7-35 ..... Revision 36
2.7.7-36 ..... Revision 36
2.7.7-37 ..... Revision 36
2.7.7-38 ..... Revision 36
2.7.7-39 ..... Revision 36
2.7.7-40 ..... Revision 36
2.7.7-41 ..... Revision 36
2.7.7-42 ..... Revision 36
2.7.7-43 ..... Revision 36
2.7.7-44 ..... Revision 36
2.7.7-45 ..... Revision 36
2.7.7-46 ..... Revision 36
2.7.7-47 ..... Revision 36
2.7.7-48 ..... Revision 36
2.7.7-49 ..... Revision 36
2.7.7-50 ..... Revision 36
2.7.7-51 ..... Revision 36
2.7.7-52 ..... Revision 36
2.7.7-53 ..... Revision 36
2.7.7-54 ..... Revision 36
2.7.7-55 ..... Revision 36
2.7.7-56 ..... Revision 36

LIST OF EFFECTIVE PAGES (Continued)

2.7.7-57 ..... Revision 36
2.7.7-58 ..... Revision 36
2.7.7-59 ..... Revision 36
2.7.7-60 ..... Revision 36
2.7.7-61 ..... Revision 36
2.7.7-62 ..... Revision 36
2.7.7-63 ..... Revision 36
2.7.7-64 .... ANSTO/TPBAR Revision
2.7.7-65 .... ANSTO/TPBAR Revision
2.7.7-66 .... ANSTO/TPBAR Revision
2.7.7-67 .... ANSTO/TPBAR Revision
2.7.7-68 .... ANSTO/TPBAR Revision
2.7.7-69 .... ANSTO/TPBAR Revision
2.7.7-70 .... ANSTO/TPBAR Revision
2.7.7-71 ..... Revision 36
2.7.7-72 ..... Revision 36
2.7.7-73 .... ANSTO/TPBAR Revision
2.7.7-74 ..... Revision 36
2.7.7-75 ..... Revision 36
2.7.7-76 .... ANSTO/TPBAR Revision
2.7.7-77 .... ANSTO/TPBAR Revision
2.7.7-78 .... ANSTO/TPBAR Revision
2.7.7-79 .... ANSTO/TPBAR Revision
2.7.7-80 .... ANSTO/TPBAR Revision
2.8-1 ..... Revision 36
2.9-1 ..... Revision 36
2.9-2 ..... Revision 36
2.9-3 ..... Revision 36
2.9-4 ..... Revision 36
2.9-5 ..... Revision 37
2.9-6 ..... ANSTO/TPBAR Revision
2.9-7 ..... ANSTO/TPBAR Revision
2.9-8 ..... ANSTO/TPBAR Revision
2.9-9 ..... ANSTO/TPBAR Revision
2.9.10..... ANSTO/TPBAR Revision
2.9.11..... ANSTO/TPBAR Revision
2.9.12..... ANSTO/TPBAR Revision
2.9.13..... ANSTO/TPBAR Revision
2.9.14..... ANSTO/TPBAR Revision
2.10.1-1 ..... Revision 36
2.10.1-2 ..... Revision 36
2.10.1-3 ..... Revision 36
2.10.2-1 ..... Revision 36
2.10.2-2 ..... Revision 36
2.10.2-3 ..... Revision 36
2.10.2-4 ..... Revision 36
2.10.2-5 ..... Revision 36
2.10.2-6 ..... Revision 36
2.10.2-7 ..... Revision 36
2.10.2-8 ..... Revision 36
2.10.2-9 ..... Revision 36
2.10.2-10 ..... Revision 36
2.10.2-11 ..... Revision 36
2.10.2-12 ..... Revision 36
2.10.2-13 ..... Revision 36
2.10.2-14 ..... Revision 36
2.10.2-15 ..... Revision 36
2.10.2-16 ..... Revision 36
2.10.2-17 ..... Revision 36
2.10.2-18 ..... Revision 36
2.10.2-19 ..... Revision 36
2.10.2-20 ..... Revision 36
2.10.2-21 ..... Revision 36
2.10.2-22 ..... Revision 36
2.10.2-23 ..... Revision 36
2.10.2-24 ..... Revision 36
2.10.2-25 ..... Revision 36
2.10.2-26 ..... Revision 36
2.10.2-27 ..... Revision 36
2.10.2-28 ..... Revision 36

LIST OF EFFECTIVE PAGES (Continued)

2.10.2-29 ..... Revision 36
2.10.2-30 ..... Revision 36
2.10.2-31 ..... Revision 36
2.10.2-32 ..... Revision 36
2.10.2-33 ..... Revision 36
2.10.2-34 ..... Revision 36
2.10.2-35 ..... Revision 36
2.10.2-36 ..... Revision 36
2.10.2-37 ..... Revision 36
2.10.2-38 ..... Revision 36
2.10.2-39 ..... Revision 36
2.10.2-40 ..... Revision 36
2.10.2-41 ..... Revision 36
2.10.2-42 ..... Revision 36
2.10.2-43 ..... Revision 36
2.10.2-44 ..... Revision 36
2.10.2-45 ..... Revision 36
2.10.2-46 ..... Revision 36
2.10.2-47 ..... Revision 36
2.10.2-48 ..... Revision 36
2.10.2-49 ..... Revision 36
2.10.3-1 ..... Revision 36
2.10.3-2 ..... Revision 36
2.10.3-3 ..... Revision 36
2.10.3-4 ..... Revision 36
2.10.3-5 ..... Revision 36
2.10.3-6 ..... Revision 36
2.10.3-7 ..... Revision 36
2.10.3-8 ..... Revision 36
2.10.3-9 ..... Revision 36
2.10.3-10 ..... Revision 36
2.10.3-11 ..... Revision 36
2.10.3-12 ..... Revision 36
2.10.3-13 ..... Revision 36
2.10.3-14 ..... Revision 36
2.10.3-15 ..... Revision 36
2.10.3-16 ..... Revision 36
2.10.3-17 ..... Revision 36
2.10.3-18 ..... Revision 36
2.10.4-1 ..... Revision 36
2.10.4-2 ..... Revision 36
2.10.4-3 ..... Revision 36
2.10.4-4 ..... Revision 36
2.10.4-5 ..... Revision 36
2.10.4-6. ..... Revision 36
2.10.4-7. ..... Revision 36
2.10.4-8. ..... Revision 36
2.10.4-9 ..... Revision 36
2.10.4-10 ..... Revision 36
2.10.4-11 ..... Revision 36
2.10.4-12 ..... Revision 36
2.10.5-1 ..... Revision 36
2.10.6-1 ..... Revision 36
2.10.6-2 ..... Revision 36
2.10.6-3 ..... Revision 36
2.10.6-4 ..... Revision 36
2.10.6-5 ..... Revision 36
2.10.6-6 ..... Revision 36
2.10.6-7 ..... Revision 36
2.10.6-8 ..... Revision 36
2.10.6-9 ..... Revision 36
2.10.6-10 ..... Revision 36
2.10.6-11 ..... Revision 36
2.10.6-12 ..... Revision 36
2.10.6-13 ..... Revision 36
2.10.6-14 ..... Revision 36
2.10.6-15 ..... Revision 36
2.10.6-16 ..... Revision 36
2.10.6-17 ..... Revision 36
2.10.6-18 ..... Revision 36

LIST OF EFFECTIVE PAGES (Continued)

2.10.6-19 ..... Revision 36
2.10.6-20 ..... Revision 36
2.10.6-21 ..... Revision 36
2.10.6-22 ..... Revision 36
2.10.7-1 ..... Revision 36
2.10.7-2 ..... Revision 36
2.10.7-3 ..... Revision 36
2.10.7-4 ..... Revision 36
2.10.7-5 ..... Revision 36
2.10.7-6 ..... Revision 36
2.10.7-7 ..... Revision 36
2.10.7-8 ..... Revision 36
2.10.7-9 ..... Revision 36
2.10.7-10 ..... Revision 36
2.10.7-11 ..... Revision 36
2.10.7-12 ..... Revision 36
2.10.7-13 ..... Revision 36
2.10.7-14 ..... Revision 36
2.10.7-15 ..... Revision 36
2.10.7-16 ..... Revision 36
2.10.7-17 ..... Revision 36
2.10.7-18 ..... Revision 36
2.10.7-19 ..... Revision 36
2.10.7-20 ..... Revision 36
2.10.7-21 ..... Revision 36
2.10.7-22 ..... Revision 36
2.10.7-23 ..... Revision 36
2.10.7-24 ..... Revision 36
2.10.7-25 ..... Revision 36
2.10.7-26 ..... Revision 36
2.10.7-27 ..... Revision 36
2.10.7-28 ..... Revision 36
2.10.7-29 ..... Revision 36
2.10.7-30 ..... Revision 36
2.10.7-31 ..... Revision 36
2.10.7-32 ..... Revision 36
2.10.7-33 ..... Revision 36
2.10.7-34 ..... Revision 36
2.10.7-35 ..... Revision 36
2.10.7-36 ..... Revision 36
2.10.7-37 ..... Revision 36
2.10.7-38 ..... Revision 36
2.10.7-39 ..... Revision 36
2.10.7-40 ..... Revision 36
2.10.7-41 ..... Revision 36
2.10.7-42 ..... Revision 36
2.10.7-43 ..... Revision 36
2.10.7-44 ..... Revision 36
2.10.7-45 ..... Revision 36
2.10.7-46 ..... Revision 36
2.10.7-47 ..... Revision 36
2.10.7-48 ..... Revision 36
2.10.7-49 ..... Revision 36
2.10.7-50 ..... Revision 36
2.10.7-51 ..... Revision 36
2.10.7-52 ..... Revision 36
2.10.7-53 ..... Revision 36
2.10.7-54 ..... Revision 36
2.10.7-55 ..... Revision 36
2.10.7-56 ..... Revision 36
2.10.7-57 ..... Revision 36
2.10.7-58 ..... Revision 36
2.10.7-59 ..... Revision 36
2.10.7-60 ..... Revision 36
2.10.7-61 ..... Revision 36
2.10.7-62 ..... Revision 36
2.10.7-63 ..... Revision 36
2.10.7-64 ..... Revision 36
2.10.7-65 ..... Revision 36
2.10.7-66 ..... Revision 36

LIST OF EFFECTIVE PAGES (Continued)

2.10.8-1 ..... Revision 36
2.10.8-2 ..... Revision 36
2.10.8-3 ..... Revision 36
2.10.8-4 ..... Revision 36
2.10.8-5 ..... Revision 36
2.10.8-6 ..... Revision 36
2.10.8-7 ..... Revision 36
2.10.8-8 ..... Revision 36
2.10.8-9 ..... Revision 36
2.10.8-10 ..... Revision 36
2.10.8-11 ..... Revision 36
2.10.8-12 ..... Revision 36
2.10.8-13 ..... Revision 36
2.10.8-14 ..... Revision 36
2.10.8-15 ..... Revision 36
2.10.8-16 ..... Revision 36
2.10.8-17 ..... Revision 36
2.10.8-18 ..... Revision 36
2.10.8-19 ..... Revision 36
2.10.8-20 ..... Revision 36
2.10.8-21 ..... Revision 36
2.10.8-22 ..... Revision 36
2.10.8-23 ..... Revision 36
2.10.8-24 ..... Revision 36
2.10.8-25 ..... Revision 36
2.10.8-26 ..... Revision 36
2.10.8-27 ..... Revision 36
2.10.8-28 ..... Revision 36
2.10.8-29 ..... Revision 36
2.10.8-30 ..... Revision 36
2.10.8-31 ..... Revision 36
2.10.8-32 ..... Revision 36
2.10.8-33 ..... Revision 36
2.10.8-34 ..... Revision 36
2.10.8-35 ..... Revision 36
2.10.8-36 ..... Revision 36
2.10.8-37 ..... Revision 36
2.10.8-38 ..... Revision 36
2.10.8-39 ..... Revision 36
2.10.8-40 ..... Revision 36
2.10.8-41 ..... Revision 36
2.10.8-42 ..... Revision 36
2.10.8-43 ..... Revision 36
2.10.8-44 ..... Revision 36
2.10.8-45 ..... Revision 36
2.10.8-46 ..... Revision 36
2.10.8-47 ..... Revision 36
2.10.8-48 ..... Revision 36
2.10.8-49 ..... Revision 36
2.10.8-50 ..... Revision 36
2.10.8-51 ..... Revision 36
2.10.8-52 ..... Revision 36
2.10.8-53 ..... Revision 36
2.10.8-54 ..... Revision 36
2.10.8-55 ..... Revision 36
2.10.8-56 ..... Revision 36
2.10.8-57 ..... Revision 36
2.10.8-58 ..... Revision 36
2.10.8-59 ..... Revision 36
2.10.8-60 ..... Revision 36
2.10.8-61 ..... Revision 36
2.10.8-62 ..... Revision 36
2.10.8-63 ..... Revision 36
2.10.8-64 ..... Revision 36
2.10.8-65 ..... Revision 36
2.10.8-66 ..... Revision 36
2.10.8-67 ..... Revision 36
2.10.8-68 ..... Revision 36
2.10.8-69 ..... Revision 36
2.10.8-70 ..... Revision 36

LIST OF EFFECTIVE PAGES (Continued)

2.10.8-71 ..... Revision 36
2.10.9-1 ..... Revision 36
2.10.9-2 ..... Revision 36
2.10.9-3 ..... Revision 36
2.10.9-4 ..... Revision 36
2.10.9-5 ..... Revision 36
2.10.9-6 ..... Revision 36
2.10.9-7 ..... Revision 36
2.10.9-8 ..... Revision 36
2.10.9-9 ..... Revision 36
2.10.9-10 ..... Revision 36
2.10.10-1 ..... Revision 36
2.10.10-2 ..... Revision 36
2.10.10-3 ..... Revision 36
2.10.10-4 ..... Revision 36
2.10.10-5 ..... Revision 36
2.10.10-6 ..... Revision 36
2.10.10-7 ..... Revision 36
2.10.10-8 ..... Revision 36
2.10.10-9 ..... Revision 36
2.10.10-10 ..... Revision 36
2.10.10-11 ..... Revision 36
2.10.10-12 ..... Revision 36
2.10.10-13 ..... Revision 36
2.10.10-14 ..... Revision 36
2.10.10-15 ..... Revision 36
2.10.10-16 ..... Revision 36
2.10.10-17 ..... Revision 36
2.10.10-18 ..... Revision 36
2.10.10-19 ..... Revision 36
2.10.10-20 ..... Revision 36
2.10.10-21 ..... Revision 36
2.10.10-22 ..... Revision 36
2.10.10-23 ..... Revision 36
2.10.10-24 ..... Revision 36
2.10.10-25 ..... Revision 36
2.10.10-26 ..... Revision 36
2.10.10-27 ..... Revision 36
2.10.10-28 ..... Revision 36
2.10.10-29 ..... Revision 36
2.10.10-30 ..... Revision 36
2.10.10-31 ..... Revision 36
2.10.10-32 ..... Revision 36
2.10.10-33 ..... Revision 36
2.10.10-34 ..... Revision 36
2.10.10-35 ..... Revision 36
2.10.10-36 ..... Revision 36
2.10.10-37 ..... Revision 36
2.10.10-38 ..... Revision 36
2.10.10-39 ..... Revision 36
2.10.10-40 ..... Revision 36
2.10.10-41 ..... Revision 36
2.10.10-42 ..... Revision 36
2.10.10-43 ..... Revision 36
2.10.10-44 ..... Revision 36
2.10.10-45 ..... Revision 36
2.10.10-46 ..... Revision 36
2.10.10-47 ..... Revision 36
2.10.10-48 ..... Revision 36
2.10.10-49 ..... Revision 36
2.10.10-50 ..... Revision 36
2.10.10-51 ..... Revision 36
2.10.10-52 ..... Revision 36
2.10.10-53 ..... Revision 36
2.10.10-54 ..... Revision 36
2.10.10-55 ..... Revision 36
2.10.10-56 ..... Revision 36
2.10.10-57 ..... Revision 36
2.10.10-58 ..... Revision 36
2.10.10-59 ..... Revision 36

LIST OF EFFECTIVE PAGES (Continued)

2.10.10-60 ..... Revision 36
2.10.10-61 ..... Revision 36
2.10.10-62 ..... Revision 36
2.10.10-63 ..... Revision 36
2.10.10-64 ..... Revision 36
2.10.10-65 ..... Revision 36
2.10.10-66 ..... Revision 36
2.10.10-67 ..... Revision 36
2.10.10-68 ..... Revision 36
2.10.10-69 ..... Revision 36
2.10.10-70 ..... Revision 36
2.10.10-71 ..... Revision 36
2.10.10-72 ..... Revision 36
2.10.10-73 ..... Revision 36
2.10.10-74 ..... Revision 36
2.10.10-75 ..... Revision 36
2.10.10-76 ..... Revision 36
2.10.10-77 ..... Revision 36
2.10.10-78 ..... Revision 36
2.10.10-79 ..... Revision 36
2.10.10-80 ..... Revision 36
2.10.10-81 ..... Revision 36
2.10.10-82 ..... Revision 36
2.10.10-83 ..... Revision 36
2.10.10-84 ..... Revision 36
2.10.10-85 ..... Revision 36
2.10.10-86 ..... Revision 36
2.10.10-87 ..... Revision 36
2.10.10-88 ..... Revision 36
2.10.10-89 ..... Revision 36
2.10.10-90 ..... Revision 36
2.10.10-91 ..... Revision 36
2.10.10-92 ..... Revision 36
2.10.10-93 ..... Revision 36
2.10.10-94 ..... Revision 36
2.10.10-95 ..... Revision 36
2.10.10-96 ..... Revision 36
2.10.10-97 ..... Revision 36
2.10.10-98 ..... Revision 36
2.10.10-99 ..... Revision 36
2.10.11-1 ..... Revision 36
2.10.11-2 ..... Revision 36
2.10.11-3 ..... Revision 36
2.10.11-4 ..... Revision 36
2.10.11-5 ..... Revision 36
2.10.11-6 ..... Revision 36
2.10.11-7 ..... Revision 36
2.10.11-8 ..... Revision 36
2.10.11-9 ..... Revision 36
2.10.11-10 ..... Revision 36
2.10.12-1 ..... Revision 36
2.10.12-2 ..... Revision 36
2.10.12-3 ..... Revision 36
2.10.12-4 ..... Revision 36
2.10.12-5 ..... Revision 36
2.10.12-6 ..... Revision 36
2.10.12-7 ..... Revision 36
2.10.12-8 ..... Revision 36
2.10.12-9 ..... Revision 36
2.10.12-10 ..... Revision 36
2.10.12-11 ..... Revision 36
2.10.12-12 ..... Revision 36
2.10.12-13 ..... Revision 36
2.10.12-14 ..... Revision 36
2.10.12-15 ..... Revision 36
2.10.12-16 ..... Revision 36
2.10.12-17 ..... Revision 36
2.10.12-18 ..... Revision 36
2.10.12-19 ..... Revision 36
2.10.12-20 ..... Revision 36

LIST OF EFFECTIVE PAGES (Continued)

2.10.12-21 .....Revision 36
2.10.12-22 .....Revision 36
2.10.12-23 .....Revision 36
2.10.12-24 .....Revision 36
2.10.12-25 .....Revision 36
2.10.12-26 .....Revision 36
2.10.12-27 .....Revision 36
2.10.12-28 .....Revision 36
2.10.12-29 .....Revision 36
2.10.12-30 .....Revision 36
2.10.12-31 .....Revision 36
2.10.12-32 .....Revision 36
2.10.13-1 .....Revision 36
2.10.13-2 .....Revision 36
2.10.13-3 .....Revision 36
2.10.13-4 .....Revision 36
2.10.13-5 .....Revision 36
2.10.13-6 .....Revision 36
2.10.13-7 .....Revision 36
2.10.13-8 .....Revision 36
2.10.13-9 .....Revision 36
2.10.13-10 .....Revision 36
2.10.13-11 .....Revision 36
2.10.13-12 .....Revision 36
2.10.13-13 .....Revision 36
2.10.13-14 .....Revision 36
2.10.13-15 .....Revision 36
2.10.13-16 .....Revision 36
2.10.13-17 .....Revision 36
2.10.13-18 .....Revision 36
2.10.13-19 .....Revision 36
2.10.13-20 .....Revision 36
2.10.14-1 .. ANSTO/TPBAR Revision
2.10.14-2 .. ANSTO/TPBAR Revision
2.10.14-3 .. ANSTO/TPBAR Revision
2.10.14-4 .... ANSTO/TPBAR Revision
2.10.14-5 .... ANSTO/TPBAR Revision
2.10.14-6 ..... Revision 36
2.10.14-7 ..... Revision 36
2.10.14-8 ..... Revision 36
2.10.14-9 ..... Revision 36
2.10.14-10 ..... Revision 36
2.10.14-11 ..... Revision 37
2.10.14-12 ..... Revision 36
2.10.14-13 ..... Revision 36
2.10.14-14 ..... Revision 36
2.10.14-15 ..... Revision 36
2.10.14-16 ..... Revision 36
2.10.14-17 ..... Revision 36
2.10.14-18 ..... Revision 36
2.10.14-19 ..... Revision 36
2.10.14-20 ..... Revision 36
2.10.14-21 ..... Revision 36
2.10.14-22 ..... Revision 36
2.10.14-23 ..... Revision 36
2.10.14-24 ..... Revision 36
2.10.14-25 ..... Revision 36
2.10.14-26 ..... Revision 36
2.10.14-27 ..... Revision 36
2.10.14-28 ..... Revision 36
2.10.14-29 ..... Revision 36
2.10.14-30 ..... Revision 36
2.10.14-31 ..... Revision 36
2.10.14-32 ..... Revision 36
2.10.14-33 ..... Revision 36
2.10.14-34 ..... Revision 36
2.10.14-35 ..... Revision 36
2.10.14-36 ..... Revision 36
2.10.14-37 ..... Revision 36
2.10.14-38 ..... Revision 36

LIST OF EFFECTIVE PAGES (Continued)

2.10.14-39 ..... Revision 36
2.10.15-1 ..... Revision 36
2.10.15-2 .... ANSTO/TPBAR Revision
2.10.15-3 .... ANSTO/TPBAR Revision
2.10.15-4 .... ANSTO/TPBAR Revision
2.10.15-5 .... ANSTO/TPBAR Revision
2.10.15-6 .... ANSTO/TPBAR Revision
2.10.15-7 .... ANSTO/TPBAR Revision
2.10.15-8 .... ANSTO/TPBAR Revision
2.10.15-9 ..... Revision 36
2.10.15-10 ..... Revision 36
2.10.15-11 ..... Revision 36
2.10.15-12 ..... Revision 36

Chapter 3

3-i ..... ANSTO/TPBAR Revision
3-ii ..... ANSTO/TPBAR Revision
3-iii ..... ANSTO/TPBAR Revision
3-iv ..... ANSTO/TPBAR Revision
3.1-1 ..... ANSTO/TPBAR Revision
3.1-2 ..... Revision 37
3.2-1 ..... Revision 36
3.2-2 ..... Revision 36
3.2-3 ..... Revision 36
3.2-4 ..... Revision 36
3.2-5 ..... Revision 36
3.2-6 ..... Revision 36
3.2-7 ..... Revision 36
3.2-8 ..... Revision 36
3.2-9 ..... Revision 36
3.2-10 ..... Revision 36
3.2-11 ..... Revision 36
3.3-1 ..... Revision 36
3.3-2 ..... Revision 36
3.4-1 ..... ANSTO/TPBAR Revision
3.4-2 ..... Revision 36
3.4-3 ..... Revision 36
3.4-4 ..... Revision 36
3.4-5 ..... Revision 36
3.4-6 ..... Revision 36
3.4-7 ..... Revision 36
3.4-8 ..... Revision 36
3.4-9 ..... Revision 36
3.4-10 ..... Revision 36
3.4-11 ..... Revision 36
3.4-12 ..... Revision 36
3.4-13 ..... Revision 36
3.4-14 ..... Revision 36
3.4-15 ..... Revision 36
3.4-16 ..... Revision 36
3.4-17 ..... Revision 36
3.4-18 ..... Revision 36
3.4-19 ..... Revision 36
3.4-20 ..... Revision 36
3.4-21 ..... Revision 36
3.4-22 ..... Revision 36
3.4-23 ..... Revision 36
3.4-24 ..... Revision 36
3.4-25 ..... Revision 36
3.4-26 ..... Revision 36
3.4-27 ..... Revision 36
3.4-28 .... ANSTO/TPBAR Revision
3.4-29 .... ANSTO/TPBAR Revision
3.4-30 .... ANSTO/TPBAR Revision
3.4-31 .... ANSTO/TPBAR Revision
3.4-32 .... ANSTO/TPBAR Revision
3.4-33 .... ANSTO/TPBAR Revision
3.4-34 .... ANSTO/TPBAR Revision
3.4-35 .... ANSTO/TPBAR Revision

LIST OF EFFECTIVE PAGES (Continued)

3.4-36 ..... ANSTO/TPBAR Revision
3.4-37 ..... ANSTO/TPBAR Revision
3.4-38 ..... ANSTO/TPBAR Revision
3.4-39 ..... ANSTO/TPBAR Revision
3.4-40 ..... ANSTO/TPBAR Revision
3.4-41 ..... ANSTO/TPBAR Revision
3.4-42 ..... ANSTO/TPBAR Revision
3.4-43 ..... ANSTO/TPBAR Revision
3.4-44 ..... ANSTO/TPBAR Revision
3.4-45 ..... ANSTO/TPBAR Revision
3.4-46 ..... ANSTO/TPBAR Revision
3.4-47 ..... ANSTO/TPBAR Revision
3.4-48 ..... ANSTO/TPBAR Revision
3.4-49 ..... ANSTO/TPBAR Revision
3.4-50 ..... ANSTO/TPBAR Revision
3.4-51 ..... ANSTO/TPBAR Revision
3.4-52 ..... ANSTO/TPBAR Revision
3.4-53 ..... ANSTO/TPBAR Revision
3.4-54 ..... ANSTO/TPBAR Revision
3.4-55 ..... ANSTO/TPBAR Revision
3.4-56 ..... ANSTO/TPBAR Revision
3.4-57 ..... ANSTO/TPBAR Revision
3.4-58 ..... ANSTO/TPBAR Revision
3.4-59 ..... ANSTO/TPBAR Revision
3.4-60 ..... ANSTO/TPBAR Revision
3.4-61 ..... ANSTO/TPBAR Revision
3.4-62 ..... ANSTO/TPBAR Revision
3.4-63 ..... ANSTO/TPBAR Revision
3.4-64 ..... ANSTO/TPBAR Revision
3.4-65 ..... ANSTO/TPBAR Revision
3.4-66 ..... ANSTO/TPBAR Revision
3.4-67 ..... ANSTO/TPBAR Revision
3.4-68 ..... ANSTO/TPBAR Revision
3.4-69 ..... ANSTO/TPBAR Revision
3.4-70 ..... ANSTO/TPBAR Revision
3.4-71 ..... ANSTO/TPBAR Revision
3.4-72 ..... ANSTO/TPBAR Revision
3.4-73 ..... ANSTO/TPBAR Revision
3.4-74 ..... ANSTO/TPBAR Revision
3.4-75 ..... ANSTO/TPBAR Revision
3.4-76 ..... ANSTO/TPBAR Revision
3.4-77 ..... ANSTO/TPBAR Revision
3.4-78 ..... ANSTO/TPBAR Revision
3.4-79 ..... ANSTO/TPBAR Revision
3.4-80 ..... ANSTO/TPBAR Revision
3.4-81 ..... ANSTO/TPBAR Revision
3.4-82 ..... ANSTO/TPBAR Revision
3.4-83 ..... ANSTO/TPBAR Revision
3.5-1 ..... Revision 36
3.5-2 ..... Revision 36
3.5-3 ..... Revision 36
3.5-4 ..... Revision 36
3.5-5 ..... Revision 36
3.5-6 ..... Revision LWT-07F
3.5-7 ..... Revision 36
3.5-8 ..... Revision 36
3.5-9 ..... Revision 36
3.5-10 ..... Revision 36
3.5-11 ..... ANSTO/TPBAR Revision
3.5-12 ..... ANSTO/TPBAR Revision
3.5-13 ..... ANSTO/TPBAR Revision
3.5-14 ..... ANSTO/TPBAR Revision
3.5-15 ..... ANSTO/TPBAR Revision
3.5-16 ..... ANSTO/TPBAR Revision
3.5-17 ..... ANSTO/TPBAR Revision
3.5-18 ..... ANSTO/TPBAR Revision
3.5-19 ..... ANSTO/TPBAR Revision
3.5-20 ..... ANSTO/TPBAR Revision
3.5-21 ..... ANSTO/TPBAR Revision
3.5-22 ..... ANSTO/TPBAR Revision

LIST OF EFFECTIVE PAGES (Continued)

3.5-23 ..... ANSTO/TPBAR Revision
3.5-24 ..... ANSTO/TPBAR Revision
3.5-25 ..... ANSTO/TPBAR Revision
3.5-26 ..... ANSTO/TPBAR Revision
3.5-27 ..... ANSTO/TPBAR Revision
3.5-28 ..... ANSTO/TPBAR Revision
3.5-29 ..... ANSTO/TPBAR Revision
3.5-30 ..... ANSTO/TPBAR Revision
3.5-31 ..... ANSTO/TPBAR Revision
3.5-32 ..... ANSTO/TPBAR Revision
3.5-33 ..... ANSTO/TPBAR Revision
3.5-34 ..... ANSTO/TPBAR Revision
3.6-1 ..... Revision 36
3.6-2 ..... Revision 36
3.6-3 ..... Revision 36
3.6-4 ..... Revision 36
3.6-5 ..... Revision 36
3.6-6 ..... Revision 36
3.6-7 ..... Revision 36
3.6-8 ..... Revision 36
3.6-9 ..... Revision 36
3.6-10 ..... Revision 36
3.6-11 ..... Revision 36
3.6-12 ..... Revision 36

Chapter 4

4-i ..... ANSTO/TPBAR Revision
4-ii ..... ANSTO/TPBAR Revision
4-iii ..... Revision 37
4.1-1 ..... ANSTO/TPBAR Revision
4.1-2 ..... Revision 36
4.1-3 ..... Revision 36
4.2-1 ..... ANSTO/TPBAR Revision
4.2-2 ..... ANSTO/TPBAR Revision
4.2-3 ..... ANSTO/TPBAR Revision
4.2-4 ..... Revision 37
4.2-5 ..... Revision 37
4.2-6 ..... Revision 37
4.2-7 ..... Revision 37
4.2-8 ..... Revision 37
4.2-9 ..... ANSTO/TPBAR Revision
4.2-10 ..... Revision 36
4.2-11 ..... Revision 36
4.2-12 ..... Revision 36
4.3-1 ..... Revision 37
4.3-2 ..... Revision 36
4.3-3 ..... Revision 36
4.3-4 ..... ANSTO/TPBAR Revision
4.3-5 ..... ANSTO/TPBAR Revision
4.3-6 ..... ANSTO/TPBAR Revision
4.3-7 ..... ANSTO/TPBAR Revision
4.4-1 ..... Revision 36
4.4-2 ..... Revision 36
4.5-1 ..... Revision 36
4.5-2 ..... Revision 36
4.5-3 ..... Revision 36
4.5-4 ..... Revision 36
4.5-5 ..... Revision 36
4.5-6 ..... Revision 36
4.5-7 ..... Revision 36
4.5-8 ..... Revision 36
4.5-9 ..... Revision 36
4.5-10 ..... Revision 36
4.5-11 ..... Revision 36
4.5-12 ..... Revision 36
4.5-13 ..... Revision 36
4.5-14 ..... Revision 36
4.5-15 ..... Revision 36
4.5-16 ..... Revision 36

LIST OF EFFECTIVE PAGES (Continued)

4.5-17 ..... Revision 36
4.5-18 ..... Revision 36
4.5-19 ..... Revision 36
4.5-20 ..... Revision 36
4.5-21 ..... Revision 36
4.5-22 ..... Revision 36
4.5-23 ..... Revision 36
4.5-24 ..... Revision 36
4.5-25 ..... Revision 36
4.5-26 ..... Revision 36
4.5-27 ..... Revision 36
4.5-28 ..... Revision 36
4.5-29 ..... Revision 36
4.5-30 ..... Revision 36
4.5-31 ..... Revision 36
4.5-32 ..... Revision 36
4.5-33 ..... Revision 36
4.5-34 ..... Revision 36
4.5-35 ..... Revision 36
4.5-36 ..... Revision 36
4.5-37 ..... Revision 36
4.5-38 ..... Revision 36
4.5-39 ..... Revision 36
4.5-40 ..... Revision 36
4.5-41 ..... Revision 36
4.5-42 ..... Revision 36
4.5-43 ..... Revision 36
4.5-44 ..... Revision 36
4.5-45 ..... Revision 36
4.5-46 ..... Revision 36
4.5-47 ..... Revision 36
4.5-48 ..... Revision 36
4.5-49 ..... Revision 36
4.5-50 ..... Revision 36
4.5-51 ..... Revision LWT-07F
4.5-52 ..... Revision 36
4.5-53 ..... Revision 36
4.5-54 ..... Revision 36
4.5-55 ..... Revision 36
4.5-56 ..... Revision 36
4.5-57 ..... Revision 36
4.5-58 ..... Revision 36
4.5-59 ..... Revision 36
4.5-60 ..... Revision 36
4.5-61 ..... Revision 36
4.5-62 ..... Revision 36
4.5-63 ..... Revision 36
4.5-64 ..... Revision 36
4.5-65 ..... Revision 36
4.5-66 ..... Revision 36
4.5-67 ..... Revision 36
4.5-68 ..... Revision 36
4.5-69 ..... Revision 37
4.5-70 ..... Revision 37
4.5-71 ..... Revision 37
4.5-72 ..... Revision 37
4.5-73 ..... Revision 37
4.5-74 ..... Revision 37
4.5-75 ..... Revision 37
4.5-76 ..... Revision 37
4.5-77 ..... Revision 37
4.5-78 ..... Revision 37
4.5-79 ..... Revision 37
4.5-80 ..... Revision 37
4.5-81 ..... Revision 37
4.5-82 ..... Revision 37
4.5-83 ..... Revision 37
4.5-84 ..... Revision 37

LIST OF EFFECTIVE PAGES (Continued)

4.5-85 ..... Revision 37
4.5-86 ..... Revision 37
4.5-87 .... ANSTO/TPBAR Revision

Chapter 5

5-i ..... ANSTO/TPBAR Revision
5-ii ..... Revision LWT-07B
5-iii ..... ANSTO/TPBAR Revision
5-iv ..... ANSTO/TPBAR Revision
5-v ..... Revision LWT-07F
5-vi ..... Revision 36
5-vii ..... ANSTO/TPBAR Revision
5-viii ..... ANSTO/TPBAR Revision
5-ix ..... ANSTO/TPBAR Revision
5-x ..... ANSTO/TPBAR Revision
5-1 ..... Revision 36
5-2 ..... Revision 36
5-3 ..... ANSTO/TPBAR Revision
5.1-1 ..... ANSTO/TPBAR Revision
5.1-2 ..... Revision LWT-07B
5.1-3 ..... ANSTO/TPBAR Revision
5.1-4 ..... ANSTO/TPBAR Revision
5.1-5 ..... ANSTO/TPBAR Revision
5.1-6 ..... ANSTO/TPBAR Revision
5.1-7 ..... ANSTO/TPBAR Revision
5.1-8 ..... Revision LWT-07B
5.1-9 ..... ANSTO/TPBAR Revision
5.1-10 .... ANSTO/TPBAR Revision
5.1-11 ..... Revision LWT-07B
5.1-12 .... ANSTO/TPBAR Revision
5.1-13 .... ANSTO/TPBAR Revision
5.1-14 ..... Revision LWT-07F
5.1-15 .... ANSTO/TPBAR Revision
5.1-16 .... ANSTO/TPBAR Revision
5.1-17 .... ANSTO/TPBAR Revision
5.2-1 ..... Revision 36
5.2-2 ..... Revision 36
5.2-3 ..... Revision 36
5.2-4 ..... Revision 36
5.2-5 ..... Revision 36
5.2-6 ..... Revision 36
5.2-7 ..... Revision 36
5.3-1 ..... Revision 36
5.3-2 ..... Revision 36
5.3-3 ..... Revision 36
5.3-4 ..... Revision 36
5.3-5 ..... Revision 36
5.3-6 ..... Revision 36
5.3-7 ..... Revision 36
5.3-8 ..... Revision 36
5.3-9 ..... Revision 36
5.3-10 ..... Revision 36
5.3-11 ..... Revision 36
5.3-12 ..... Revision LWT-07B
5.3-13 ..... Revision LWT-07B
5.3-14 ..... Revision LWT-07F
5.3-15 ..... Revision LWT-07F
5.3-16 ..... Revision 36
5.3-17 ..... Revision LWT-07B
5.3-18 ..... Revision LWT-07F
5.3-19 ..... Revision LWT-07B
5.3-20 ..... Revision 36
5.3-21 ..... Revision LWT-07F
5.3-22 ..... Revision LWT-07F
5.3-22a ..... Revision LWT-07F
5.3-22b ..... Revision LWT-07F
5.3-23 ..... Revision 36
5.3-24 ..... Revision 36
5.3-25 ..... Revision 36

LIST OF EFFECTIVE PAGES (Continued)

5.3-26 ..... Revision 36
5.3-27 ..... Revision 36
5.3-28 ..... Revision 36
5.3-29 ..... Revision 36
5.3-30 ..... Revision 36
5.3-31 ..... Revision 36
5.3-32 ..... Revision 36
5.3-33 ..... Revision 36
5.3-34 ..... Revision 36
5.3-35 ..... Revision 36
5.3-36 ..... Revision 36
5.3-37 ..... Revision 36
5.3-38 ..... Revision 36
5.3-39 ..... Revision 36
5.3-40 ..... Revision 36
5.3-41 ..... Revision 36
5.3-42 ..... Revision 36
5.3-43 ..... Revision 36
5.3-44 ..... Revision 36
5.3-45 ..... Revision 36
5.3-46 ..... Revision 36
5.3-47 ..... Revision 36
5.3-48 ..... Revision 36
5.3-49 ..... Revision 36
5.3-50 ..... Revision 36
5.3-51 ..... Revision 36
5.3-52 ..... Revision 36
5.3-53 ..... Revision 36
5.3-54 ..... Revision 36
5.3-55 ..... Revision 36
5.3-56 ..... Revision 36
5.3-57 ..... Revision 36
5.3-58 ..... Revision 36
5.3-59 ..... Revision 36
5.3-60 ..... Revision 36
5.3-61 ..... Revision 36
5.3-62 ..... Revision 36
5.3-63 ..... Revision 36
5.3-64 ..... Revision 36
5.3-65 ..... Revision 36
5.3-66 ..... Revision 36
5.3-67 ..... Revision 37
5.3-68 ..... Revision 37
5.3-69 ..... Revision 36
5.3-70 ..... Revision 36
5.3-71 ..... Revision 36
5.3-72 ..... Revision 36
5.3-73 ..... Revision 36
5.3-74 ..... Revision 36
5.3-75 ..... Revision 36
5.3-76 ..... Revision 36
5.3-77 ..... Revision 36
5.3-78 ..... Revision 36
5.3-79 ..... Revision 36
5.3-80 ..... Revision 36
5.3-81 ..... Revision 36
5.3-82 ..... Revision 36
5.3-83 ..... Revision 36
5.3-84 ..... Revision 36
5.3-85 ..... Revision 36
5.3-86 ..... Revision 36
5.3-87 ..... Revision 36
5.3-88 ..... Revision 36
5.3-89 ..... ANSTO/TPBAR Revision
5.3-90 ..... ANSTO/TPBAR Revision
5.3-91 ..... ANSTO/TPBAR Revision
5.3-92 ..... ANSTO/TPBAR Revision
5.3-93 ..... ANSTO/TPBAR Revision
5.3-94 ..... ANSTO/TPBAR Revision
5.3-95 ..... ANSTO/TPBAR Revision

LIST OF EFFECTIVE PAGES (Continued)

5.3-96 ..... ANSTO/TPBAR Revision
5.3-97 ..... ANSTO/TPBAR Revision
5.3-98 ..... ANSTO/TPBAR Revision
5.3-99 ..... ANSTO/TPBAR Revision
5.3-100 ..... ANSTO/TPBAR Revision
5.3-101 ..... ANSTO/TPBAR Revision
5.3-102 ..... ANSTO/TPBAR Revision
5.3-103 ..... ANSTO/TPBAR Revision
5.3-104 ..... ANSTO/TPBAR Revision
5.3-105 ..... ANSTO/TPBAR Revision
5.3-106 ..... ANSTO/TPBAR Revision
5.3-107 ..... ANSTO/TPBAR Revision
5.3-108 ..... ANSTO/TPBAR Revision
5.3-109 ..... ANSTO/TPBAR Revision
5.3-110 ..... ANSTO/TPBAR Revision
5.3-111 ..... ANSTO/TPBAR Revision
5.3-112 ..... ANSTO/TPBAR Revision
5.3-113 ..... ANSTO/TPBAR Revision
5.3-114 ..... ANSTO/TPBAR Revision
5.3-115 ..... ANSTO/TPBAR Revision
5.3-116 ..... ANSTO/TPBAR Revision
5.3-117 ..... ANSTO/TPBAR Revision
5.3-118 ..... ANSTO/TPBAR Revision
5.3-119 ..... ANSTO/TPBAR Revision
5.3-120 ..... ANSTO/TPBAR Revision
5.3-121 ..... ANSTO/TPBAR Revision
5.3-122 ..... ANSTO/TPBAR Revision
5.3-123 ..... ANSTO/TPBAR Revision
5.3-124 ..... ANSTO/TPBAR Revision
5.3-125 ..... ANSTO/TPBAR Revision
5.3-126 ..... ANSTO/TPBAR Revision
5.3-127 ..... ANSTO/TPBAR Revision
5.3-128 ..... ANSTO/TPBAR Revision
5.3-129 ..... ANSTO/TPBAR Revision
5.3-130 ..... ANSTO/TPBAR Revision
5.3-131 ..... ANSTO/TPBAR Revision
5.3-132 ..... ANSTO/TPBAR Revision
5.3-133 ..... ANSTO/TPBAR Revision
5.3-134 ..... ANSTO/TPBAR Revision
5.3-135 ..... ANSTO/TPBAR Revision
5.3-136 ..... ANSTO/TPBAR Revision
5.3-137 ..... ANSTO/TPBAR Revision
5.3-138 ..... ANSTO/TPBAR Revision
5.3-139 ..... ANSTO/TPBAR Revision
5.3-140 ..... ANSTO/TPBAR Revision
5.3-141 .... ANSTO/TPBAR Revision
5.3-142 ..... ANSTO/TPBAR Revision
5.3-143 ..... ANSTO/TPBAR Revision
5.3-144 ..... ANSTO/TPBAR Revision
5.3-145 ..... ANSTO/TPBAR Revision
5.3-146 ..... ANSTO/TPBAR Revision
5.3-147 ..... ANSTO/TPBAR Revision
5.3-148 ..... ANSTO/TPBAR Revision
5.3-149 ..... ANSTO/TPBAR Revision
5.3-150 ..... ANSTO/TPBAR Revision
5.3-151 ..... ANSTO/TPBAR Revision
5.3-152 ..... ANSTO/TPBAR Revision
5.3-153 ..... ANSTO/TPBAR Revision
5.3-154 ..... ANSTO/TPBAR Revision
5.3-155 ..... ANSTO/TPBAR Revision
5.3-156 ..... ANSTO/TPBAR Revision
5.3-157 ..... ANSTO/TPBAR Revision
5.3-158 ..... ANSTO/TPBAR Revision
5.3-159 ..... ANSTO/TPBAR Revision
5.3-160 ..... ANSTO/TPBAR Revision
5.3-161 ..... ANSTO/TPBAR Revision
5.3-162 ..... ANSTO/TPBAR Revision
5.3-163 ..... ANSTO/TPBAR Revision
5.3-164 ..... ANSTO/TPBAR Revision
5.3-165 ..... ANSTO/TPBAR Revision

LIST OF EFFECTIVE PAGES (Continued)

5.3-166 ..... ANSTO/TPBAR Revision
5.3-167 ..... ANSTO/TPBAR Revision
5.3-168 ..... ANSTO/TPBAR Revision
5.3-169 ..... ANSTO/TPBAR Revision
5.3-170 ..... ANSTO/TPBAR Revision
5.3-171 ..... ANSTO/TPBAR Revision
5.3-172 ..... ANSTO/TPBAR Revision
5.3-173 ..... ANSTO/TPBAR Revision
5.3-174 ..... ANSTO/TPBAR Revision
5.3-175 ..... ANSTO/TPBAR Revision
5.3-176 ..... ANSTO/TPBAR Revision
5.3-177 ..... ANSTO/TPBAR Revision
5.3-178 ..... ANSTO/TPBAR Revision
5.3-179 ..... ANSTO/TPBAR Revision
5.3-180 ..... ANSTO/TPBAR Revision
5.3-181 ..... ANSTO/TPBAR Revision
5.3-182 ..... ANSTO/TPBAR Revision
5.3-183 ..... ANSTO/TPBAR Revision
5.3-184 ..... ANSTO/TPBAR Revision
5.3-185 ..... ANSTO/TPBAR Revision
5.3-186 ..... ANSTO/TPBAR Revision
5.3-187 ..... ANSTO/TPBAR Revision
5.3-188 ..... ANSTO/TPBAR Revision
5.3-189 ..... ANSTO/TPBAR Revision
5.3-190 ..... ANSTO/TPBAR Revision
5.3-191 ..... ANSTO/TPBAR Revision
5.3-192 ..... ANSTO/TPBAR Revision
5.3-193 ..... ANSTO/TPBAR Revision
5.3-194 ..... ANSTO/TPBAR Revision
5.3-195 ..... ANSTO/TPBAR Revision
5.3-196 ..... ANSTO/TPBAR Revision
5.3-197 ..... ANSTO/TPBAR Revision
5.3-198 ..... ANSTO/TPBAR Revision
5.3-199 ..... ANSTO/TPBAR Revision
5.3-200 ..... ANSTO/TPBAR Revision
5.3-201 ..... ANSTO/TPBAR Revision
5.3-202 ..... ANSTO/TPBAR Revision
5.3-203 ..... ANSTO/TPBAR Revision
5.3-204 ..... ANSTO/TPBAR Revision
5.3-205 ..... ANSTO/TPBAR Revision
5.3-206 ..... ANSTO/TPBAR Revision
5.3-207 ..... Revision LWT-07B
5.3-208 ..... Revision LWT-07B
5.3-209 ..... Revision LWT-07B
5.3-210 ..... Revision LWT-07B
5.3-211 ..... ANSTO/TPBAR Revision
5.3-212 ..... ANSTO/TPBAR Revision
5.3-213 ..... ANSTO/TPBAR Revision
5.3-214 ..... ANSTO/TPBAR Revision
5.3-215 ..... ANSTO/TPBAR Revision
5.3-216 ..... ANSTO/TPBAR Revision
5.3-217 ..... ANSTO/TPBAR Revision
5.3-218 ..... ANSTO/TPBAR Revision
5.3-219 ..... ANSTO/TPBAR Revision
5.3-220 ..... ANSTO/TPBAR Revision
5.3-221 ..... ANSTO/TPBAR Revision
5.3-222 ..... ANSTO/TPBAR Revision
5.3-223 ..... ANSTO/TPBAR Revision
5.3-224 ..... ANSTO/TPBAR Revision
5.3-225 ..... ANSTO/TPBAR Revision
5.3-226 ..... ANSTO/TPBAR Revision
5.3-227 ..... ANSTO/TPBAR Revision
5.3-228 ..... ANSTO/TPBAR Revision
5.3-229 ..... ANSTO/TPBAR Revision
5.3-230 ..... ANSTO/TPBAR Revision
5.3-231 ..... ANSTO/TPBAR Revision
5.3-232 ..... ANSTO/TPBAR Revision
5.3-233 ..... ANSTO/TPBAR Revision
5.3-234 ..... ANSTO/TPBAR Revision
5.3-235 ..... ANSTO/TPBAR Revision

LIST OF EFFECTIVE PAGES (Continued)

5.3-236 ..... ANSTO/TPBAR Revision
5.3-237 ..... ANSTO/TPBAR Revision
5.3-238 ..... ANSTO/TPBAR Revision
5.3-239 ..... ANSTO/TPBAR Revision
5.3-240 ..... ANSTO/TPBAR Revision
5.3-241 ..... ANSTO/TPBAR Revision
5.3-242 ..... ANSTO/TPBAR Revision
5.3-243 ..... ANSTO/TPBAR Revision
5.3-244 ..... ANSTO/TPBAR Revision
5.3-245 ..... ANSTO/TPBAR Revision
5.3-246 ..... ANSTO/TPBAR Revision
5.3-247 ..... ANSTO/TPBAR Revision
5.3-248 ..... ANSTO/TPBAR Revision
5.3-249 ..... ANSTO/TPBAR Revision
5.3-250 ..... ANSTO/TPBAR Revision
5.3-251 ..... ANSTO/TPBAR Revision
5.3-252 ..... ANSTO/TPBAR Revision
5.3-253 ..... ANSTO/TPBAR Revision
5.3-254 ..... ANSTO/TPBAR Revision
5.3-255 ..... ANSTO/TPBAR Revision
5.3-256 ..... ANSTO/TPBAR Revision
5.4-1 ..... Revision 36
5.4-2 ..... Revision 36
5.4-3 ..... Revision 36
5.4-4 ..... Revision 36
5.4-5 ..... Revision 36
5.4-6 ..... Revision 36

Chapter 6

6-i ..... Revision LWT-07D
6-ii ..... Revision LWT-07D
6-iii ..... Revision LWT-07B
6-iv ..... Revision LWT-07D
6-v ..... Revision LWT-07D
6-vi ..... Revision LWT-07D
6-vii ..... Revision LWT-07B
6-viii ..... Revision LWT-07D
6-ix ..... Revision LWT-07D
6-x ..... Revision LWT-07D
6-xi ..... Revision LWT-07D
6-xii ..... Revision LWT-07D
6-xiii ..... Revision LWT-07D
6-xiv ..... Revision LWT-07D
6-1 ..... Revision LWT-07F
6.1-1 ..... Revision 36
6.1-2 ..... Revision 36
6.1-3 ..... Revision 36
6.1-4 ..... ANSTO/TPBAR Revision
6.2-1 ..... ANSTO/TPBAR Revision
6.2-2 ..... Revision 36
6.2-3 ..... Revision 36
6.2-4 ..... Revision 36
6.2-5 ..... Revision 36
6.2-6 ..... Revision 36
6.2-7 ..... Revision LWT-07F
6.2-8 ..... Revision 36
6.2-9 ..... Revision 36
6.2-10 ..... Revision 36
6.2-11 ..... Revision 36
6.2-12 ..... Revision 36
6.2-13 ..... Revision 36
6.2-14 ..... Revision 36
6.2-15 ..... Revision 36
6.2-16 ..... Revision 36
6.2-17 ..... Revision 36
6.2-18 ..... Revision 36
6.2-19 ..... Revision 36
6.2-20 ..... Revision 36
6.2-21 ..... Revision 36

LIST OF EFFECTIVE PAGES (Continued)

6.2-22 ..... Revision 36
6.2-23 ..... Revision 36
6.2-24 ..... Revision 36
6.2-25 ..... Revision 36
6.2-26 ..... Revision 36
6.2-27 ..... Revision 36
6.2-28 ..... Revision 36
6.2-29 ..... Revision 36
6.2-30 ..... Revision 36
6.2-31 ..... Revision 36
6.2-32 ..... Revision 37
6.2-33 ..... Revision 37
6.2-34 ..... Revision 37
6.2-35 .... ANSTO/TPBAR Revision
6.2-36 .... ANSTO/TPBAR Revision
6.2-37 .... ANSTO/TPBAR Revision
6.2-38 .... ANSTO/TPBAR Revision
6.2-39 .... ANSTO/TPBAR Revision
6.2-40 .... ANSTO/TPBAR Revision
6.2-41 .... ANSTO/TPBAR Revision
6.3-1 ..... ANSTO/TPBAR Revision
6.3-2 ..... Revision 36
6.3-3 ..... Revision 36
6.3-4 ..... Revision 36
6.3-5 ..... Revision 36
6.3-6 ..... Revision 36
6.3-7 ..... Revision 36
6.3-8 ..... Revision 36
6.3-9 ..... Revision 36
6.3-10 ..... Revision 36
6.3-11 ..... Revision LWT-07B
6.3-12 ..... Revision LWT-07D
6.3-13 ..... Revision 36
6.3-14 ..... Revision 36
6.3-15 ..... Revision 36
6.3-16 ..... Revision 36
6.3-17 ..... Revision LWT-07B
6.3-18 ..... Revision LWT-07B
6.3-19 ..... Revision LWT-07B
6.3-20 ..... Revision LWT-07B
6.3-21 ..... Revision LWT-07B
6.3-22 ..... Revision 36
6.3-23 ..... Revision 36
6.3-24 ..... Revision 36
6.3-25 ..... Revision 36
6.3-26 ..... Revision 36
6.3-27 ..... Revision 36
6.3-28 ..... Revision 36
6.3-29 ..... Revision 36
6.3-30 ..... Revision 36
6.3-31 ..... Revision 36
6.3-32 ..... Revision 36
6.3-33 ..... Revision 36
6.3-34 ..... Revision 36
6.3-35 ..... Revision 36
6.3-36 ..... Revision 36
6.3-37 ..... Revision 36
6.3-38 ..... Revision 36
6.3-39 ..... Revision 36
6.3-40 .... ANSTO/TPBAR Revision
6.3-41 ..... Revision 36
6.3-42 ..... Revision 36
6.3-43 ..... Revision 36
6.3-44 ..... Revision 36
6.3-45 ..... Revision 36
6.3-46 ..... Revision 36
6.3-47 ..... Revision 36
6.3-48 ..... Revision 36
6.3-49 ..... Revision 36
6.3-50 ..... Revision 36

LIST OF EFFECTIVE PAGES (Continued)

6.3-51 ..... Revision 36
6.3-52 ..... Revision 37
6.3-53 ..... Revision 37
6.3-54 ..... Revision 37
6.3-55 ..... Revision 37
6.3-56 ..... Revision 37
6.3-57 ..... Revision 37
6.3-58 ..... Revision 37
6.3-59 .... ANSTO/TPBAR Revision
6.3-60 .... ANSTO/TPBAR Revision
6.3-61 .... ANSTO/TPBAR Revision
6.3-62 .... ANSTO/TPBAR Revision
6.3-63 .... ANSTO/TPBAR Revision
6.3-64 .... ANSTO/TPBAR Revision
6.3-65 .... ANSTO/TPBAR Revision
6.4-1 ..... Revision 37
6.4-2 ..... Revision 36
6.4-3 ..... Revision 36
6.4-4 ..... Revision 36
6.4-5 ..... Revision 36
6.4-6 ..... Revision 36
6.4-7 ..... Revision 36
6.4-8 ..... Revision 36
6.4-9 ..... Revision 36
6.4-10 ..... Revision 36
6.4-11 ..... Revision 36
6.4-12 ..... Revision 36
6.4-13 ..... Revision 36
6.4-14 ..... Revision 36
6.4-15 ..... Revision 36
6.4-16 ..... Revision 36
6.4-17 ..... Revision 36
6.4-18 ..... Revision 36
6.4-19 ..... Revision LWT-07F
6.4-20 ..... Revision 36
6.4-21 ..... Revision 36
6.4-22 ..... Revision 36
6.4-23 ..... Revision 36
6.4-24 ..... Revision 36
6.4-25 ..... Revision LWT-07F
6.4-26 ..... Revision 36
6.4-27 ..... Revision 36
6.4-28 ..... Revision 36
6.4-29 ..... Revision 36
6.4-30 ..... Revision 36
6.4-31 ..... Revision 36
6.4-32 .....Revision LWT-07B
6.4-33 ..... Revision LWT-07D
6.4-34 ..... Revision LWT-07F
6.4-35 ..... Revision LWT-07D
6.4-36 ..... Revision LWT-07D
6.4-37 ..... Revision LWT-07D
6.4-38 ..... Revision LWT-07D
6.4-39 ..... Revision LWT-07D
6.4-40 ..... Revision LWT-07D
6.4-41 ..... Revision LWT-07D
6.4-42 ..... Revision LWT-07D
6.4-43 ..... Revision LWT-07D
6.4-44 ..... Revision LWT-07D
6.4-45 ..... Revision LWT-07D
6.4-46 ..... Revision LWT-07D
6.4-47 ..... Revision LWT-07D
6.4-48 ..... Revision LWT-07D
6.4-49 ..... Revision LWT-07D
6.4-50 ..... Revision LWT-07D
6.4-51 ..... Revision LWT-07D
6.4-52 ..... Revision LWT-07D
6.4-53 ..... Revision LWT-07D
6.4-54 ..... Revision LWT-07D
6.4-55 ..... Revision LWT-07D

LIST OF EFFECTIVE PAGES (Continued)

6.4-56 ..... Revision LWT-07D
6.4-57 ..... Revision LWT-07D
6.4-58 ..... Revision LWT-07D
6.4-59 ..... Revision LWT-07D
6.4-60 ..... Revision LWT-07D
6.4-61 ..... Revision LWT-07D
6.4-62 ..... Revision LWT-07D
6.4-63 ..... Revision LWT-07D
6.4-64 ..... Revision LWT-07D
6.4-65 ..... Revision LWT-07D
6.4-66 ..... Revision LWT-07D
6.4-67 ..... Revision LWT-07D
6.4-68 ..... Revision LWT-07D
6.4-69 ..... Revision LWT-07D
6.4-70 ..... Revision LWT-07D
6.4-71 ..... Revision LWT-07D
6.4-72 ..... Revision LWT-07D
6.4-73 ..... Revision LWT-07D
6.4-74 ..... Revision LWT-07D
6.4-75 ..... Revision LWT-07D
6.4-76 ..... Revision LWT-07D
6.4-77 ..... Revision LWT-07D
6.4-78 ..... Revision LWT-07D
6.4-79 ..... Revision LWT-07D
6.4-80 ..... Revision LWT-07D
6.4-81 ..... Revision LWT-07D
6.4-82 ..... Revision LWT-07D
6.4-83 ..... Revision LWT-07D
6.4-84 ..... Revision LWT-07D
6.4-85 ..... Revision LWT-07D
6.4-86 ..... Revision LWT-07D
6.4-87 ..... Revision LWT-07D
6.4-88 ..... Revision LWT-07D
6.4-89 ..... Revision LWT-07D
6.4-90 ..... Revision LWT-07D
6.4-91 ..... Revision LWT-07D
6.4-92 ..... Revision LWT-07D
6.4-93 ..... Revision LWT-07D
6.4-94 ..... Revision LWT-07D
6.4-95 ..... Revision LWT-07D
6.4-96 ..... Revision LWT-07D
6.4-97 ..... Revision LWT-07D
6.4-98 ..... Revision LWT-07D
6.4-99 ..... Revision LWT-07D
6.4-100 ..... Revision LWT-07D
6.4-101 ..... Revision LWT-07D
6.4-102 ..... Revision LWT-07D
6.4-103 ..... Revision LWT-07D
6.4-104 ..... Revision LWT-07D
6.4-105 ..... Revision LWT-07D
6.4-106 ..... Revision LWT-07D
6.4-107 ..... Revision LWT-07D
6.4-108 ..... Revision LWT-07D
6.4-109 ..... Revision LWT-07D
6.4-110 ..... Revision LWT-07D
6.4-111 ..... Revision LWT-07D
6.4-112 ..... Revision LWT-07D
6.4-113 ..... Revision LWT-07D
6.4-114 ..... Revision LWT-07D
6.4-115 ..... Revision LWT-07D
6.4-116 ..... Revision LWT-07D
6.4-117 ..... Revision LWT-07D
6.4-118 ..... Revision LWT-07D
6.4-119 ..... Revision LWT-07D
6.4-120 ..... Revision LWT-07D
6.4-121 ..... Revision LWT-07D
6.4-122 ..... Revision LWT-07D
6.4-123 ..... Revision LWT-07D
6.4-124 ..... Revision LWT-07D
6.4-125 ..... Revision LWT-07D

LIST OF EFFECTIVE PAGES (Continued)

6.4-126 ..... Revision LWT-07D
6.4-127 ..... Revision LWT-07D
6.4-128 ..... Revision LWT-07D
6.4-129 ..... Revision LWT-07D
6.4-130 ..... Revision LWT-07D
6.4-131 ..... Revision LWT-07D
6.4-132 ..... Revision LWT-07D
6.4-133 ..... Revision LWT-07D
6.4-134 ..... Revision LWT-07D
6.4-135 ..... Revision LWT-07D
6.4-136 ..... Revision LWT-07D
6.4-137 ..... Revision LWT-07D
6.4-138 ..... Revision LWT-07D
6.4-139 ..... Revision LWT-07D
6.4-140 ..... Revision LWT-07D
6.4-141 ..... Revision LWT-07D
6.4-142 ..... Revision LWT-07D
6.4-143 ..... Revision LWT-07D
6.4-144 ..... Revision LWT-07D
6.4-145 ..... Revision LWT-07D
6.4-146 ..... Revision LWT-07D
6.4-147 ..... Revision LWT-07D
6.4-148 ..... Revision LWT-07D
6.4-149 ..... Revision LWT-07D
6.4-150 ..... Revision LWT-07D
6.4-151 ..... Revision LWT-07D
6.4-152 ..... Revision LWT-07D
6.4-153 ..... Revision LWT-07D
6.4-154 ..... Revision LWT-07D
6.4-155 ..... Revision LWT-07D
6.4-156 ..... Revision LWT-07D
6.4-157 ..... Revision LWT-07D
6.4-158 ..... Revision LWT-07D
6.4-159 ..... Revision LWT-07D
6.4-160 ..... Revision LWT-07D
6.4-161 ..... Revision LWT-07D
6.4-162 ..... Revision LWT-07D
6.4-163 ..... Revision LWT-07D
6.4-164 ..... Revision LWT-07D
6.4-165 ..... Revision LWT-07D
6.4-166 ..... Revision LWT-07D
6.4-167 ..... Revision LWT-07D
6.4-168 ..... Revision LWT-07D
6.4-169 ..... Revision LWT-07D
6.5-1 ..... Revision 36
6.5-2 ..... Revision 36
6.5-3 ..... Revision 36
6.5-4 ..... Revision 36
6.5-5 ..... Revision 36
6.5-6 ..... Revision 36
6.5-7 ..... Revision 36
6.5-8 ..... Revision 36
6.5-9 ..... Revision 36
6.5-10 ..... Revision 36
6.5-11 ..... Revision 36
6.5-12 ..... Revision 36
6.5-13 ..... Revision 36
6.5-14 ..... ANSTO/TPBAR Revision
6.5-15 ..... Revision 36
6.5-16 ..... Revision 36
6.5-17 ..... Revision 36
6.5-18 ..... Revision 36
6.5-19 ..... Revision 36
6.6-1 ..... Revision 36
6.6-2 ..... Revision 36
6.6-3 ..... Revision 36
6.6-4 ..... Revision 36
6.6-5 ..... Revision 36
6.6-6 ..... Revision 36
6.6-7 ..... Revision 36

LIST OF EFFECTIVE PAGES (Continued)

6.6-8 ..... Revision 36
6.6-9 ..... Revision 36
6.6-10 ..... Revision 36
6.6-11 ..... Revision 36
6.6-12 ..... Revision 36
6.6-13 ..... Revision 36
6.6-14 ..... Revision 36
6.6-15 ..... Revision 36
6.6-16 ..... Revision 36
6.6-17 ..... Revision 36
6.6-18 ..... Revision 36
6.6-19 ..... Revision 36
6.6-20 ..... Revision 36
6.6-21 ..... Revision 36
6.6-22 ..... Revision 36
6.6-23 ..... Revision 36
6.6-24 ..... Revision 36
6.6-25 ..... Revision 36
6.6-26 ..... Revision 36
6.6-27 ..... Revision 36
6.6-28 ..... Revision 36
6.6-29 ..... Revision 36
6.6-30 ..... Revision 36
6.6-31 ..... Revision 36
6.6-32 ..... Revision 36
6.6-33 ..... Revision 36
6.6-34 ..... Revision 36
6.6-35 ..... Revision 36
6.6-36 ..... Revision 36
6.6-37 ..... Revision 36
6.6-38 ..... Revision 36
6.6-39 ..... Revision 36
6.6-40 ..... Revision 36
6.6-41 ..... Revision 36
6.6-42 ..... Revision 36
6.6-43 ..... Revision 36
6.6-44 ..... Revision 36
6.6-45 ..... Revision 36
6.6-46 ..... Revision 36
6.6-47 ..... Revision 36
6.6-48 ..... Revision 36
6.6-49 ..... Revision 36
6.6-50 ..... Revision 36
6.6-51 ..... Revision 36
6.6-52 ..... Revision 36
6.6-53 ..... Revision 36
6.6-54 ..... Revision 36
6.6-55 ..... Revision 36
6.6-56 ..... Revision 36
6.6-57 ..... Revision 36
6.6-58 ..... Revision 36
6.6-59 ..... Revision 36
6.6-60 ..... Revision 36
6.6-61 ..... Revision 36
6.6-62 ..... Revision 36
6.6-63 ..... Revision 36
6.6-64 ..... Revision 36
6.6-65 ..... Revision 36
6.6-66 ..... Revision 36
6.6-67 ..... Revision 36
6.6-68 ..... Revision 36
6.6-69 ..... Revision 36
6.6-70 ..... Revision 36
6.6-71 ..... Revision 36
6.6-72 ..... Revision 36
6.6-73 ..... Revision 36
6.6-74 ..... Revision 36
6.6-75 ..... Revision 36
6.6-76 ..... Revision 36
6.6-77 ..... Revision 36

LIST OF EFFECTIVE PAGES (Continued)

6.6-78 ..... Revision 36
6.6-79 ..... Revision 36
6.6-80 ..... Revision 36
6.6-81 ..... Revision 36
6.6-82 ..... Revision 36
6.6-83 ..... Revision 36
6.6-84 ..... Revision 36
6.6-85 ..... Revision 36
6.6-86 ..... Revision 36
6.6-87 ..... Revision 36
6.6-88 ..... Revision 36
6.6-89 ..... Revision 36
6.6-90 ..... Revision 36
6.6-91 ..... Revision 36
6.6-92 ..... Revision 36
6.6-93 ..... Revision 36
6.6-94 ..... Revision 36
6.6-95 ..... Revision 36
6.6-96 ..... Revision 36
6.6-97 ..... Revision 36
6.6-98 ..... Revision 36
6.6-99 ..... Revision 36
6.6-100 ..... Revision 36
6.6-101 ..... Revision 36
6.6-102 ..... Revision 36
6.6-103 ..... Revision 36
6.6-104 ..... Revision 36
6.6-105 ..... Revision 36
6.6-106 ..... Revision 36
6.6-107 ..... Revision 36
6.6-108 ..... Revision 36
6.6-109 ..... Revision 36
6.6-110 ..... Revision 36
6.6-111 ..... Revision 36
6.6-112 ..... Revision 36
6.6-113 ..... Revision 36
6.6-114 ..... Revision 36
6.6-115 ..... Revision 36
6.6-116 ..... Revision 36
6.6-117 ..... Revision 36
6.6-118 ..... Revision 36
6.6-119 ..... Revision 36
6.6-120 ..... Revision 36
6.6-121 ..... Revision 36
6.6-122 ..... Revision 36
6.6-123 ..... Revision 36
6.6-124 ..... Revision 36
6.6-125 ..... Revision 36
6.6-126 ..... Revision 36
6.6-127 ..... Revision 36
6.6-128 ..... Revision 36
6.6-129 ..... Revision 36
6.6-130 ..... Revision 36
6.6-131 ..... Revision 36
6.6-132 ..... Revision 36
6.6-133 ..... Revision 36
6.6-134 ..... Revision 36
6.6-135 ..... Revision 36
6.6-136 ..... Revision 36
6.6-137 ..... Revision 36
6.6-138 ..... Revision 36
6.6-139 ..... Revision 36
6.6-140 ..... Revision 36
6.6-141 ..... Revision 36
6.6-142 ..... Revision 36
6.6-143 ..... Revision 36
6.6-144 ..... Revision 36
6.6-145 ..... Revision 36
6.6-146 ..... Revision 36
6.6-147 ..... Revision 36

LIST OF EFFECTIVE PAGES (Continued)

6.6-148 ..... Revision 36
6.6-149 ..... Revision 36
6.6-150 ..... Revision 36
6.6-151 ..... Revision 36
6.6-152 ..... Revision 36
6.6-153 ..... Revision 36
6.6-154 ..... Revision 36
6.6-155 ..... Revision 36
6.6-156 ..... Revision 36
6.6-157 ..... Revision 36
6.6-158 ..... Revision 36
6.6-159 ..... Revision 36
6.6-160 ..... Revision 36
6.6-161 ..... Revision 36
6.6-162 ..... Revision 36
6.6-163 ..... Revision 36
6.6-164 ..... Revision 36
6.6-165 ..... Revision 36
6.6-166 ..... Revision 36
6.6-167 ..... Revision 36
6.6-168 ..... Revision 36
6.6-169 ..... Revision 36
6.6-170 ..... Revision 36
6.6-171 ..... Revision 36
6.6-172 ..... Revision 36
6.6-173 ..... Revision 36
6.6-174 ..... Revision 36
6.6-175 ..... Revision 36
6.6-176 ..... Revision 36
6.6-177 ..... Revision 36
6.6-178 ..... Revision 36
6.6-179 ..... Revision 36
6.6-180 ..... Revision 36
6.6-181 ..... Revision 36
6.6-182 ..... Revision 36
6.6-183 ..... Revision 36
6.6-184 ..... Revision 36
6.6-185 ..... Revision 36
6.6-186 ..... Revision 36
6.6-187 ..... Revision 36
6.6-188 ..... Revision 36
6.6-189 ..... Revision 36
6.6-190 ..... Revision 36
6.6-191 ..... Revision 36
6.6-192 ..... Revision 36
6.6-193 ..... Revision 36
6.6-194 ..... Revision 36
6.6-195 ..... Revision 36
6.6-196 ..... Revision 36
6.6-197 ..... Revision 36
6.6-198 ..... Revision 36
6.6-199 ..... Revision 36
6.6-200 ..... Revision 36
6.6-201 ..... Revision 36
6.6-202 ..... Revision 36
6.6-203 ..... Revision 36
6.6-204 ..... Revision 36
6.6-205 ..... Revision 36
6.6-206 ..... Revision 36
6.6-207 ..... Revision 36
6.6-208 ..... Revision 36
6.6-209 ..... Revision 36
6.6-210 ..... Revision 36
6.6-211 ..... Revision 36
6.6-212 ..... Revision 36
6.6-213 ..... Revision 36
6.6-214 ..... Revision 36
6.6-215 ..... Revision 36
6.6-216 ..... Revision 36
6.6-217 ..... Revision 36

LIST OF EFFECTIVE PAGES (Continued)

6.6-218 ..... Revision 36
6.6-219 ..... Revision 36
6.6-220 ..... Revision 36
6.6-221 ..... Revision 36
6.6-222 ..... Revision 36
6.6-223 ..... Revision 36
6.6-224 ..... Revision 36
6.6-225 ..... Revision 36
6.6-226 ..... Revision 36
6.6-227 ..... Revision 36
6.6-228 ..... Revision 36
6.6-229 ..... Revision 36
6.6-230 ..... Revision 36
6.6-231 ..... Revision 36
6.6-232 ..... Revision 36
6.6-233 ..... Revision 36
6.6-234 ..... Revision 36
6.6-235 ..... Revision 36
6.6-236 ..... Revision 36
6.6-237 ..... Revision 36
6.6-238 ..... Revision 36
6.6-239 ..... Revision 36
6.6-240 ..... Revision 36
6.6-241 ..... Revision 36
6.6-242 ..... Revision 36
6.6-243 ..... Revision 36
6.6-244 ..... Revision 36
6.6-245 ..... Revision 36
6.6-246 ..... Revision 36
6.6-247 ..... Revision 36
6.6-248 ..... Revision 36
6.6-249 ..... Revision 36
6.6-250 ..... Revision 36
6.6-251 ..... Revision 36
6.6-252 ..... Revision 36
6.6-253 ..... Revision 36
6.6-254 ..... Revision 36
6.6-255 ..... Revision 36
6.6-256 ..... Revision 36
6.6-257 ..... Revision 36
6.6-258 ..... Revision 36
6.6-259 ..... Revision 36
6.6-260 ..... Revision 36
6.6-261 ..... Revision 36
6.6-262 ..... Revision 36
6.6-263 ..... Revision 36
6.6-264 ..... Revision 36
6.6-265 ..... Revision 36
6.6-266 ..... Revision 36
6.6-267 ..... Revision 36
6.6-268 ..... Revision 36
6.6-269 ..... Revision 36
6.6-270 ..... Revision 36
6.6-271 ..... Revision 36
6.6-272 ..... Revision 36
6.6-273 ..... Revision 36
6.6-274 ..... Revision 36
6.6-275 ..... Revision 36
6.6-276 ..... Revision 36
6.6-277 ..... Revision 36
6.6-278 ..... Revision 36
6.6-279 ..... Revision 36
6.6-280 ..... Revision 36
6.6-281 ..... Revision 36
6.6-282 ..... Revision 36
6.6-283 ..... Revision 36
6.6-284 ..... Revision 36
6.6-285 ..... Revision 36
6.6-286 ..... Revision 36
6.6-287 ..... Revision 36

LIST OF EFFECTIVE PAGES (Continued)

6.6-288 ..... Revision 36
6.6-289 ..... Revision 36
6.6-290 ..... Revision 36
6.6-291 ..... Revision 36
6.6-292 ..... Revision 36
6.6-293 ..... Revision 36
6.6-294 ..... Revision 36
6.6-295 ..... Revision 36
6.6-296 ..... Revision 36
6.6-297 ..... Revision 36
6.6-298 ..... Revision 36
6.6-299 ..... Revision 36
6.6-300 ..... Revision 36
6.6-301 ..... Revision 36
6.6-302 ..... Revision 36
6.6-303 ..... Revision 36
6.6-304 ..... Revision 36
6.6-305 ..... Revision 36
6.6-306 ..... Revision 36
6.6-307 ..... Revision 36
6.6-308 ..... Revision 36
6.6-309 ..... Revision 36
6.6-310 ..... Revision 36
6.6-311 ..... Revision 36
6.6-312 ..... Revision 36
6.6-313 ..... Revision 36
6.6-314 ..... Revision 36
6.6-315 ..... Revision 36
6.6-316 ..... Revision 36
6.6-317 ..... Revision 36
6.6-318 ..... Revision 36
6.6-319 ..... Revision 36
6.6-320 ..... Revision 36
6.6-321 ..... Revision 36
6.6-322 ..... Revision 36
6.6-323 ..... Revision 36
6.6-324 ..... Revision 36
6.6-325 ..... Revision 36
6.6-326 ..... Revision 36
6.6-327 ..... Revision 36
6.6-328 ..... Revision 36
6.6-329 ..... Revision 36
6.6-330 ..... Revision 36
6.6-331 ..... Revision 36
6.6-332 ..... Revision 36
6.6-333 ..... Revision 36
6.6-334 ..... Revision 36
6.6-335 ..... Revision 36
6.6-336 ..... Revision 36
6.6-337 ..... Revision 36
6.6-338 ..... Revision 36
6.6-339 ..... Revision 36
6.6-340 ..... Revision 36
6.6-341 ..... Revision 36
6.6-342 ..... Revision 36
6.6-343 ..... Revision 36
6.6-344 ..... Revision 36
6.6-345 ..... Revision 36
6.6-346 ..... Revision 36
6.6-347 ..... Revision 36
6.6-348 ..... Revision 36
6.6-349 ..... Revision 36
6.6-350 ..... Revision 36
6.6-351 ..... Revision 36
6.6-352 ..... Revision 36
6.6-353 ..... Revision 36
6.6-354 ..... Revision 36
6.6-355 ..... Revision 36
6.6-356 ..... Revision 36
6.6-357 ..... Revision 36

LIST OF EFFECTIVE PAGES (Continued)

6.6-358 ..... Revision 36
6.6-359 ..... Revision 36
6.6-360 ..... Revision 36
6.6-361 ..... Revision 36
6.6-362 ..... Revision 36
6.6-363 ..... Revision 36
6.6-364 ..... Revision 36
6.6-365 ..... Revision 36
6.6-366 ..... Revision 36
6.6-367 ..... Revision 36
6.6-368 ..... Revision 36
6.6-369 ..... Revision 36
6.6-370 ..... Revision 36
6.6-371 ..... Revision 36
6.6-372 ..... Revision 36
6.6-373 ..... Revision 36
6.6-374 ..... Revision 36
6.6-375 ..... Revision 36
6.6-376 ..... Revision 36
6.6-377 ..... Revision 36
6.6-378 ..... Revision 36
6.6-379 ..... Revision 36
6.6-380 ..... Revision 36
6.6-381 ..... Revision 36
6.6-382 ..... Revision 36
6.6-383 ..... Revision 36
6.6-384 ..... Revision 36
6.6-385 ..... Revision 36
6.6-386 ..... Revision 36
6.6-387 ..... Revision 36
6.6-388 ..... Revision 36
6.6-389 ..... Revision 36
6.6-390 ..... Revision 36
6.6-391 ..... Revision 36
6.6-392 ..... Revision 36
6.6-393 ..... Revision 36
6.6-394 ..... Revision 36
6.6-395 ..... Revision 36
6.6-396 ..... Revision 36
6.6-397 ..... Revision 36
6.6-398 ..... Revision 36
6.6-399 ..... Revision 36
6.6-400 ..... Revision 36
6.6-401 ..... Revision 36
6.6-402 ..... Revision 36
6.6-403 ..... Revision 36
6.6-404 ..... Revision 36
6.6-405 ..... Revision 36
6.6-406 ..... Revision 36
6.6-407 ..... Revision 36
6.6-408 ..... Revision 36
6.6-409 ..... Revision 36
6.6-410 ..... Revision 36
6.6-411 ..... Revision 36
6.6-412 ..... Revision 36
6.6-413 ..... Revision 36
6.6-414 ..... Revision 36
6.6-415 ..... Revision 36
6.6-416 ..... Revision 36
6.6-417 ..... Revision 36
6.6-418 ..... Revision 36
6.6-419 ..... Revision 36
6.6-420 ..... Revision 36
6.6-421 ..... Revision 36
6.6-422 ..... Revision 36
6.6-423 ..... Revision 36
6.6-424 ..... Revision 36
6.6-425 ..... Revision 36
6.6-426 ..... Revision 36
6.6-427 ..... Revision 36

LIST OF EFFECTIVE PAGES (Continued)

6.6-428 ..... Revision 36
6.6-429 ..... Revision 36
6.6-430 ..... Revision 36
6.6-431 ..... Revision 36
6.6-432 ..... Revision 36
6.6-433 ..... Revision 36
6.6-434 ..... Revision 36
6.6-435 ..... Revision 36
6.6-436 ..... Revision 36
6.6-437 ..... Revision 36
6.6-438 ..... Revision 36
6.6-439 ..... Revision 36
6.6-440 ..... Revision 36
6.6-441 ..... Revision 36
6.6-442 ..... Revision 36
6.6-443 ..... Revision 36
6.6-444 ..... Revision 36
6.6-445 ..... Revision 36
6.6-446 ..... Revision 36
6.6-447 ..... Revision 36
6.6-448 ..... Revision 36
6.6-449 ..... Revision 36
6.6-450 ..... Revision 36
6.6-451 ..... Revision 36
6.6-452 ..... Revision 36
6.6-453 ..... Revision 36
6.6-454 ..... Revision 36
6.6-455 ..... Revision 36
6.6-456 ..... Revision 36
6.6-457 ..... Revision 36
6.6-458 ..... Revision 36
6.6-459 ..... Revision 36
6.6-460 ..... Revision 36
6.6-461 ..... Revision 36
6.6-462 ..... Revision 36
6.6-463 ..... Revision 36
6.6-464 ..... Revision 36
6.6-465 ..... Revision 36
6.6-466 ..... Revision 36
6.6-467 ..... Revision 36
6.6-468 ..... Revision 36
6.6-469 ..... Revision 36
6.6-470 ..... Revision 36
6.6-471 ..... Revision 36
6.6-472 ..... Revision 36
6.6-473 ..... Revision 36
6.6-474 ..... Revision 36
6.6-475 ..... Revision 36
6.6-476 ..... Revision 36
6.6-477 ..... Revision 36
6.6-478 ..... Revision 36
6.6-479 ..... Revision 36
6.6-480 ..... Revision 36
6.6-481 ..... Revision 36
6.6-482 ..... Revision 36
6.6-483 ..... Revision 36
6.6-484 ..... Revision 36
6.6-485 ..... Revision 36
6.6-486 ..... Revision 36
6.6-487 ..... Revision 36
6.6-488 ..... Revision 36
6.6-489 ..... Revision 36
6.6-490 ..... Revision 36
6.6-491 ..... Revision 36
6.6-492 ..... Revision 36
6.6-493 ..... Revision 36
6.6-494 ..... Revision 36
6.6-495 ..... Revision 36
6.6-496 ..... Revision 36
6.6-497 ..... Revision 36

LIST OF EFFECTIVE PAGES (Continued)

6.6-498 ..... Revision 36
6.6-499 ..... Revision 36
6.6-500 ..... Revision 36
6.6-501 ..... Revision 36
6.6-502 ..... Revision 36
6.6-503 ..... Revision 36
6.6-504 ..... Revision 36
6.6-505 ..... Revision 36
6.6-506 ..... Revision 36
6.6-507 ..... Revision 36
6.6-508 ..... Revision 36
6.6-509 ..... Revision 36
6.6-510 ..... Revision 36
6.6-511 ..... Revision 36
6.6-512 ..... Revision 36
6.6-513 ..... Revision 36
6.6-514 ..... Revision 36
6.6-515 ..... Revision 36
6.6-516 ..... Revision 36
6.6-517 ..... Revision 36
6.6-518 ..... Revision 36
6.6-519 ..... Revision 36
6.6-520 ..... Revision 36
6.6-521 ..... Revision 36
6.6-522 ..... Revision 36
6.6-523 ..... Revision 36
6.6-524 ..... Revision 36
6.6-525 ..... Revision 36
6.6-526 ..... Revision 36
6.6-527 ..... Revision 36
6.6-528 ..... Revision 36
6.6-529 ..... Revision 36
6.6-530 ..... Revision 36
6.6-531 ..... Revision 36
6.6-532 ..... Revision 36
6.6-533 ..... Revision 36
6.6-534 ..... Revision 36
6.6-535 ..... Revision 36
6.6-536 ..... Revision 36
6.6-537 ..... Revision 36
6.6-538 ..... Revision 36
6.6-539 ..... Revision 36
6.6-540 ..... Revision 36
6.6-541 ..... Revision 36
6.6-542 ..... Revision 36
6.6-543 ..... Revision 36
6.6-544 ..... Revision 36
6.6-545 ..... Revision 36
6.6-546 ..... Revision 36
6.6-547 ..... Revision 36
6.6-548 ..... Revision 36
6.6-549 ..... Revision 36
6.6-550 ..... Revision 36
6.6-551 ..... Revision 36
6.6-552 ..... Revision 36
6.6-553 ..... Revision 36
6.6-554 ..... Revision 36
6.6-555 ..... Revision 36
6.6-556 ..... Revision 36
6.6-557 ..... Revision 36
6.6-558 ..... Revision 36
6.6-559 ..... Revision 36
6.6-560 ..... Revision 36
6.6-561 ..... Revision 36
6.6-562 ..... Revision 36
6.6-563 ..... Revision 36
6.6-564 ..... Revision 36
6.6-565 ..... Revision 36
6.6-566 ..... Revision 36
6.6-567 ..... Revision 36

LIST OF EFFECTIVE PAGES (Continued)

6.6-568 ..... Revision 36
6.6-569 ..... Revision 36
6.6-570 ..... Revision 36
6.6-571 ..... Revision 36
6.6-572 ..... Revision 36
6.6-573 ..... Revision 36
6.6-574 ..... Revision 36
6.6-575 ..... Revision 36
6.6-576 ..... Revision 36
6.6-577 ..... Revision 36
6.6-578 ..... Revision 36
6.6-579 ..... Revision 36
6.6-580 ..... Revision 36
6.6-581 ..... Revision 36
6.6-582 ..... Revision 36
6.6-583 ..... Revision 36
6.6-584 ..... Revision 36
6.6-585 ..... Revision 36
6.6-586 ..... Revision 36
6.6-587 ..... Revision 36
6.6-588 ..... Revision 36
6.6-589 ..... Revision 36
6.6-590 ..... Revision 36
6.6-591 ..... Revision 36
6.6-592 ..... Revision 36
6.6-593 ..... Revision 36
6.6-594 ..... Revision 36
6.6-595 ..... Revision 36
6.6-596 ..... Revision 36
6.6-597 ..... Revision 36
6.6-598 ..... Revision 36
6.6-599 ..... Revision 36
6.6-600 ..... Revision 36
6.6-601 ..... Revision 36
6.6-602 ..... Revision 36
6.6-603 ..... Revision 36
6.6-604 ..... Revision 36
6.6-605 ..... Revision 36
6.6-606 ..... Revision 36
6.6-607 ..... Revision 36
6.6-608 ..... Revision 36
6.6-609 ..... Revision 36
6.6-610 ..... Revision 36
6.6-611 ..... Revision 36
6.6-612 ..... Revision 36
6.6-613 ..... Revision 36
6.6-614 ..... Revision 36
6.6-615 ..... Revision 36
6.6-616 ..... Revision 36
6.6-617 ..... Revision 36
6.6-618 ..... Revision 36
6.6-619 ..... Revision 36
6.6-620 ..... Revision 36
6.6-621 ..... Revision 36
6.6-622 ..... Revision 36
6.6-623 ..... Revision 36
6.6-624 ..... Revision 36
6.6-625 ..... Revision 36
6.6-626 ..... Revision 36
6.6-627 ..... Revision 36
6.6-628 ..... Revision 36
6.6-629 ..... Revision 36
6.6-630 ..... Revision 36
6.6-631 ..... Revision 36
6.6-632 ..... Revision 36
6.6-633 ..... Revision 36
6.6-634 ..... Revision 36
6.6-635 ..... Revision 36
6.6-636 ..... Revision 36
6.6-637 ..... Revision 36

LIST OF EFFECTIVE PAGES (Continued)

6.6-638 ..... Revision 36
6.6-639 ..... Revision 36
6.6-640 ..... Revision 36
6.6-641 ..... Revision 36
6.6-642 ..... Revision 36
6.6-643 ..... Revision 36
6.6-644 ..... Revision 36
6.6-645 ..... Revision 36
6.6-646 ..... Revision 36
6.6-647 ..... Revision 36
6.6-648 ..... Revision 36
6.6-649 ..... Revision 36
6.6-650 ..... Revision 36
6.6-651 ..... Revision 36
6.6-652 ..... Revision 36
6.6-653 ..... Revision 36
6.6-654 ..... Revision 36
6.6-655 ..... Revision 36
6.6-656 ..... Revision 36
6.6-657 ..... Revision 36
6.6-658 ..... Revision 36
6.6-659 ..... Revision 36
6.6-660 ..... Revision 36
6.6-661 ..... Revision 36
6.6-662 ..... Revision 36
6.6-663 ..... Revision 36
6.6-664 ..... Revision 36
6.6-665 ..... Revision 36
6.6-666 ..... Revision 36
6.6-667 ..... Revision 36
6.6-668 ..... Revision 36
6.6-669 ..... Revision 36
6.6-670 ..... Revision 36
6.6-671 ..... Revision 36
6.6-672 ..... Revision 36
6.6-673 ..... Revision 36
6.6-674 ..... Revision 36
6.6-675 ..... Revision 36
6.6-676 ..... Revision 36
6.6-677 ..... Revision 36
6.6-678 ..... Revision 36
6.6-679 ..... Revision 36
6.6-680 ..... Revision 36
6.6-681 ..... Revision 36
6.6-682 ..... Revision 36
6.6-683 ..... Revision 36
6.6-684 ..... Revision 36
6.6-685 ..... Revision 36
6.6-686 ..... Revision 36
6.6-687 ..... Revision 36
6.6-688 ..... Revision 36
6.6-689 ..... Revision 36
6.6-690 ..... Revision 36
6.6-691 ..... Revision 36
6.6-692 ..... Revision 36
6.6-693 ..... Revision 36
6.6-694 ..... Revision 36
6.6-695 ..... Revision 36
6.6-696 ..... Revision 36
6.6-697 ..... Revision 36
6.6-698 ..... Revision 36
6.6-699 ..... Revision 36
6.6-700 ..... Revision 36
6.6-701 ..... Revision 36
6.6-702 ..... Revision 36
6.6-703 ..... Revision 36
6.6-704 ..... Revision 36
6.6-705 ..... Revision 36
6.6-706 ..... Revision 36
6.6-707 ..... Revision 36

LIST OF EFFECTIVE PAGES (Continued)

6.6-708 ..... Revision 36
6.6-709 ..... Revision 36
6.6-710 ..... Revision 36
6.6-711 ..... Revision 36
6.6-712 ..... Revision 36
6.6-713 ..... Revision 36
6.6-714 ..... Revision 36
6.6-715 ..... Revision 36
6.6-716 ..... Revision 36
6.6-717 ..... Revision 36
6.6-718 ..... Revision 36
6.6-719 ..... Revision 36
6.6-720 ..... Revision 36
6.6-721 ..... Revision 36
6.6-722 ..... Revision 36
6.6-723 ..... Revision 36
6.6-724 ..... Revision 36
6.6-725 ..... Revision 36
6.6-726 ..... Revision 36
6.6-727 ..... Revision 36
6.6-728 ..... Revision 36
6.6-729 ..... Revision 36
6.6-730 ..... Revision 36
6.6-731 ..... Revision 36
6.6-732 ..... Revision 36
6.6-733 ..... Revision 36
6.6-734 ..... Revision 36
6.6-735 ..... Revision 36
6.6-736 ..... Revision 36
6.6-737 ..... Revision 36
6.6-738 ..... Revision 36
6.6-739 ..... Revision 36
6.6-740 ..... Revision 36
6.6-741 ..... Revision 36
6.6-742 ..... Revision 36
6.6-743 ..... Revision 36
6.6-744 ..... Revision 36
6.6-745 ..... Revision 36
6.6-746 ..... Revision 36
6.6-747 ..... Revision 36
6.6-748 ..... Revision 36
6.6-749 ..... Revision 36
6.6-750 ..... Revision 36
6.6-751 ..... Revision 36
6.6-752 ..... Revision 36
6.6-753 ..... Revision 36
6.6-754 ..... Revision 36
6.6-755 ..... Revision 36
6.6-756 ..... Revision 36
6.6-757 ..... Revision 36
6.6-758 ..... Revision 36
6.6-759 ..... Revision 36
6.6-760 ..... Revision 36
6.6-761 ..... Revision 36
6.6-762 ..... Revision 36
6.6-763 ..... Revision 36
6.6-764 ..... Revision 36
6.6-765 ..... Revision 36
6.6-766 ..... Revision 36
6.6-767 ..... Revision 36
6.6-768 ..... Revision 36
6.6-769 ..... Revision 36
6.6-770 ..... Revision 36
6.6-771 ..... Revision 36
6.6-772 ..... Revision 36
6.6-773 ..... Revision 36
6.6-774 ..... Revision 36
6.6-775 ..... Revision 36
6.6-776 ..... Revision 36
6.6-777 ..... Revision 36

LIST OF EFFECTIVE PAGES (Continued)

6.6-778 ..... Revision 36
6.6-779 ..... Revision 36
6.6-780 ..... Revision 36
6.6-781 ..... Revision 36
6.6-782 ..... Revision 36
6.6-783 ..... Revision 36
6.6-784 ..... Revision 36
6.6-785 ..... Revision 36
6.6-786 ..... Revision 36
6.6-787 ..... Revision 36
6.6-788 ..... Revision 36
6.6-789 ..... Revision 36
6.6-790 ..... Revision 36
6.6-791 ..... Revision 36
6.6-792 ..... Revision 36
6.6-793 ..... Revision 36
6.6-794 ..... Revision 36
6.6-795 ..... Revision 36
6.6-796 ..... Revision 36
6.6-797 ..... Revision 36
6.6-798 ..... Revision 36
6.6-799 ..... Revision 36
6.6-800 ..... Revision 36
6.6-801 ..... Revision 36
6.6-802 ..... Revision 36
6.6-803 ..... Revision 36
6.6-804 ..... Revision 36
6.6-805 ..... Revision 36
6.6-806 ..... Revision 36
6.6-807 ..... Revision 36
6.6-808 ..... Revision 36
6.6-809 ..... Revision 36
6.6-810 ..... Revision 36
6.6-811 ..... Revision 36
6.6-812 ..... Revision 36
6.6-813 ..... Revision 36
6.6-814 ..... Revision 36
6.6-815 ..... Revision 36
6.6-816 ..... Revision 36
6.6-817 ..... Revision 36
6.6-818 ..... Revision 36
6.6-819 ..... Revision 36
6.6-820 ..... Revision 36
6.6-821 ..... Revision 36
6.6-822 ..... Revision 36
6.6-823 ..... Revision 36
6.6-824 ..... Revision 36
6.6-825 ..... Revision 36
6.6-826 ..... Revision 36
6.6-827 ..... Revision 36
6.6-828 ..... Revision 36
6.6-829 ..... Revision 36
6.6-830 ..... Revision 36
6.6-831 ..... Revision 36
6.6-832 ..... Revision 36
6.6-833 ..... Revision 36
6.6-834 ..... Revision 36
6.6-835 ..... Revision 36
6.6-836 ..... Revision 36
6.6-837 ..... Revision 36
6.6-838 ..... Revision 36
6.6-839 ..... Revision 36
6.6-840 ..... Revision 36
6.6-841 ..... Revision 36
6.6-842 ..... Revision 36
6.6-843 ..... Revision 36
6.6-844 ..... Revision 36
6.6-845 ..... Revision 36
6.6-846 ..... Revision 36
6.6-847 ..... Revision 36

LIST OF EFFECTIVE PAGES (Continued)

6.6-848 ..... Revision 37
6.6-849 ..... Revision 37
6.6-850 ..... Revision 37
6.6-851 ..... Revision 37
6.6-852 ..... Revision 37
6.6-853 ..... Revision 37
6.6-854 ..... Revision 37
6.6-855 ..... Revision 37
6.6-856 ..... Revision 37
6.6-857 ..... Revision 37
6.6-858 ..... Revision 37
6.6-859 ..... Revision 37
6.6-860 ..... Revision 37
6.6-861 ..... Revision 37
6.6-862 ..... Revision 37
6.6-863 ..... Revision 37
6.6-864 ..... Revision 37
6.6-865 ..... Revision 37
6.6-866 ..... Revision 37
6.6-867 ..... Revision 37
6.6-868 ..... Revision 37
6.6-869 ..... Revision 37
6.6-870 ..... Revision 37
6.6-871 ..... Revision 37
6.6-872 ..... Revision 37
6.6-873 ..... Revision 37
6.6-874 ..... Revision 37
6.6-875 ..... Revision 37
6.6-876 ..... Revision 37
6.6-877 ..... Revision 37
6.6-878 ..... Revision 37
6.6-879 ..... Revision 37
6.6-880 ..... Revision 37
6.6-881 ..... Revision 37
6.6-882 ..... Revision 37
6.6-883 ..... Revision 37
6.6-884 ..... Revision 37
6.6-885 ..... Revision 37
6.6-886 ..... Revision 37
6.6-887 ..... Revision 37
6.6-888 ..... Revision 37
6.6-889 ..... Revision 37
6.6-890 ..... Revision 37
6.6-891 ..... Revision 37
6.6-892 ..... Revision 37
6.6-893 ..... Revision 37
6.6-894 ..... Revision 37
6.6-895 ..... ANSTO/TPBAR Revision
6.6-896 ..... ANSTO/TPBAR Revision
6.6-897 ..... ANSTO/TPBAR Revision
6.6-898 ..... ANSTO/TPBAR Revision
6.6-899 ..... ANSTO/TPBAR Revision
6.6-900 ..... ANSTO/TPBAR Revision
6.6-901 ..... ANSTO/TPBAR Revision
6.6-902 ..... ANSTO/TPBAR Revision
6.6-903 ..... ANSTO/TPBAR Revision
6.6-904 ..... ANSTO/TPBAR Revision
6.6-905 ..... ANSTO/TPBAR Revision
6.6-906 ..... ANSTO/TPBAR Revision
6.6-907 ..... ANSTO/TPBAR Revision
6.6-908 ..... ANSTO/TPBAR Revision
6.6-909 ..... ANSTO/TPBAR Revision
6.6-910 ..... ANSTO/TPBAR Revision
6.6-911 ..... ANSTO/TPBAR Revision
6.6-912 ..... ANSTO/TPBAR Revision
6.6-913 ..... ANSTO/TPBAR Revision
6.6-914 ..... ANSTO/TPBAR Revision
6.6-915 ..... ANSTO/TPBAR Revision
6.6-916 ..... ANSTO/TPBAR Revision
6.6-917 ..... ANSTO/TPBAR Revision

LIST OF EFFECTIVE PAGES (Continued)

6.6-918 ..... ANSTO/TPBAR Revision
6.6-919 ..... ANSTO/TPBAR Revision
6.6-920 ..... ANSTO/TPBAR Revision
6.6-921 ..... ANSTO/TPBAR Revision
6.6-922 ..... ANSTO/TPBAR Revision
6.6-923 ..... ANSTO/TPBAR Revision
6.6-924 ..... ANSTO/TPBAR Revision
6.6-925 ..... ANSTO/TPBAR Revision
6.6-926 ..... ANSTO/TPBAR Revision
6.6-927 ..... ANSTO/TPBAR Revision
6.6-928 ..... ANSTO/TPBAR Revision
6.6-929 ..... ANSTO/TPBAR Revision
6.6-930 ..... ANSTO/TPBAR Revision
6.6-931 ..... ANSTO/TPBAR Revision
6.6-932 ..... ANSTO/TPBAR Revision
6.6-933 ..... ANSTO/TPBAR Revision
6.6-934 ..... ANSTO/TPBAR Revision
6.6-935 ..... ANSTO/TPBAR Revision
6.6-936 ..... Revision LWT-07D
6.6-937 ..... Revision LWT-07D
6.6-938 ..... Revision LWT-07D
6.6-939 ..... Revision LWT-07D
6.6-940 ..... Revision LWT-07D
6.6-941 ..... Revision LWT-07D
6.6-942 ..... Revision LWT-07D

Chapter 7

7-i .....Revision LWT-07B
7-ii .....Revision LWT-07B
7-1 ..... ANSTO/TPBAR Revision
7.1-1 ..... ANSTO/TPBAR Revision
7.1-2 ..... Revision 36
7.1-3 ..... Revision 36
7.1-4 ..... Revision 36
7.1-5 ..... Revision 36
7.1-6 ..... Revision 36
7.1-7 ..... Revision 36
7.1-8 ..... Revision 36
7.1-9 ..... Revision 36
7.1-10 ..... Revision 36
7.1-11 ..... Revision 36
7.1-12 .... ANSTO/TPBAR Revision
7.1-13 ..... Revision LWT-07F
7.1-14 .... ANSTO/TPBAR Revision
7.1-15 ..... Revision LWT-07F
7.1-16 ..... Revision LWT-07F
7.1-17 .... ANSTO/TPBAR Revision
7.1-18 .....Revision LWT-07B
7.1-19 ..... Revision LWT-07F
7.1-20 ..... Revision LWT-07F
7.1-21 .....Revision LWT-07B
7.1-22 .... ANSTO/TPBAR Revision
7.1-23 ..... Revision LWT-07F
7.1-24 .....Revision LWT-07B
7.1-25 .....Revision LWT-07B
7.1-26 .....Revision LWT-07B
7.1-27 .....Revision LWT-07B
7.1-28 .....Revision LWT-07B
7.1-29 .....Revision LWT-07B
7.1-30 .....Revision LWT-07B
7.1-31 .....Revision LWT-07B
7.1-32 .....Revision LWT-07B
7.1-33 .....Revision LWT-07B
7.1-34 .....Revision LWT-07B
7.1-35 .....Revision LWT-07B
7.1-36 .....Revision LWT-07B
7.1-37 .....Revision LWT-07B
7.1-38 .....Revision LWT-07B
7.1-39 .....Revision LWT-07B

LIST OF EFFECTIVE PAGES (Continued)

7.1-40 .....Revision LWT-07B
7.1-41 .....Revision LWT-07B
7.1-42 .....Revision LWT-07B
7.1-43 .....Revision LWT-07B
7.1-44 .....Revision LWT-07B
7.1-45 .....Revision LWT-07B
7.1-46 .....Revision LWT-07B
7.1-47 .....Revision LWT-07B
7.1-48 .....Revision LWT-07B
7.1-49 .....Revision LWT-07B
7.1-50 .....Revision LWT-07B
7.1-51 .....Revision LWT-07B
7.1-52 .....Revision LWT-07B
7.1-53 .....Revision LWT-07B
7.1-54 .....Revision LWT-07B
7.1-55 .....Revision LWT-07B
7.1-56 .....Revision LWT-07B
7.2-1 ..... Revision 36
7.2-2 ..... Revision 36
7.2-3 ..... ANSTO/TPBAR Revision
7.2-4 ..... Revision 36
7.2-5 ..... Revision 37
7.2-6 ..... ANSTO/TPBAR Revision
7.2-7 ..... ANSTO/TPBAR Revision
7.2-8 ..... ANSTO/TPBAR Revision
7.2-9 ..... ANSTO/TPBAR Revision
7.2.10..... ANSTO/TPBAR Revision
7.2.11..... ANSTO/TPBAR Revision
7.2-12 .... ANSTO/TPBAR Revision
7.2-13 .... ANSTO/TPBAR Revision
7.3-1 ..... Revision 36
7.3-2 ..... ANSTO/TPBAR Revision

Chapter 8

8-i ..... Revision 37
8-1 ..... Revision 36
8.1-1 ..... Revision 36
8.1-2 ..... Revision 36
8.1-3 ..... Revision 36
8.1-4 ..... Revision 36
8.1-5 ..... Revision 36
8.1-6 ..... Revision 36
8.1-7 ..... ANSTO/TPBAR Revision
8.1-8 ..... Revision 36
8.1-9 ..... ANSTO/TPBAR Revision
8.1-10 .... ANSTO/TPBAR Revision
8.1-11 .... ANSTO/TPBAR Revision
8.1-12 .... ANSTO/TPBAR Revision
8.2-1 ..... Revision 36
8.2-2 ..... Revision 36
8.2-3 ..... Revision 36
8.2-4 ..... Revision 36
8.3-1 ..... Revision 36
8.3-2 ..... Revision 36
8.3-3 ..... Revision 36
8.3-4 ..... Revision 36
8.3-5 ..... Revision 36

Chapter 9

9-i ..... Revision 36
9-1 ..... Revision 36
9-2 ..... Revision 36
9-3 ..... Revision 36

LIST OF EFFECTIVE PAGES (Continued)

9-4 ..... Revision 36
9-5 ..... Revision 36
9-6 ..... Revision 36
9-7 ..... Revision 36
9-8 ..... Revision 36
9-9 ..... Revision 36
9-10 ..... ANSTO/TPBAR Revision

Master Table of Contents

MASTER TABLE OF CONTENTS

1.0 GENERAL INFORMATION 1-1
1.1 Introduction 1.1-1
1.2 Package Description 1.2-1
1.2.1 Packaging 1.2-1
1.2.2 Operational Features 1.2-4
1.2.3 Contents of Packaging 1.2-5
1.3 Quality Assurance 1.3-1
1.4 License Drawings 1.4-1
1.5 Unclassified DOE Reference Documents and Drawings 1.5-1

Chapter 1 Appendices

Appendix 1-A – TTQP-1-015, "Description of the Tritium-Producing Burnable Absorber Rod for the Commercial Light Water Reactor," Revision 14

Appendix 1-B – TTQP-1-091, "Unclassified TPBAR Releases, Including Tritium," Revision 11

Appendix 1-C – TTQP-1-111, "Unclassified Bounding Source Term, Radionuclide Concentrations, Decay Heat, and Dose Rates for the Production TPBAR," Revision 5

Appendix 1-D – DOE Drawing H-3-307845, "Production TPBAR Reactor Interface Dimensions Watts Bar," Revision 10, Sheet 1 of 2

Appendix 1-E – DOE Drawing H-3-308875, "Production TPBAR Reactor Interface Dimensions Sequoyah," Revision 5, Sheet 1 of 2

Appendix 1-F – DOE Drawing H-3-310568, "Mark 8.1 Multi Pencil TPBAR – Watts Bar Reactor Interface," Revision 0, Sheet 1 of 2

Appendix 1-G – PNNL Letter, TTP-06-056, Subject: Exposure of Shipping Cask to Tritium, dated February 21, 2006

2.0 STRUCTURAL EVALUATION 2-1
2.1.0 Structural Design 2.1.1-1
2.1.1 Discussion 2.1.1-1
2.1.2 Basic Design Criteria 2.1.2-1
2.1.3 Miscellaneous Structural Failure Modes 2.1.3-1
2.2.0 Weights and Centers of Gravity 2.2-1
2.3.0 Properties of Materials 2.3-1

MASTER TABLE OF CONTENTS (continued)

2.3.1 Mechanical Properties of Materials 2.3.1-1
2.4.0 General Standards for All Packages 2.4-1
2.4.1 Minimum Package Size 2.4.1-1
2.4.2 Tamperproof Feature 2.4.2-1
2.4.3 Positive Closure 2.4.3-1
2.4.4 Chemical and Galvanic Reactions 2.4.4-1
2.4.5 Cask Design 2.4.5-1
2.4.6 Continuous Venting 2.4.6-1
2.5.0 Lifting and Tiedown Standards 2.5.1-1
2.5.1 Lifting Devices 2.5.1-1
2.5.2 Tiedown Devices 2.5.2-1
2.6.0 Normal Conditions of Transport 2.6.1-1
2.6.1 Hot Case 2.6.1-1
2.6.2 Cold Case 2.6.2-1
2.6.3 Reduced External Pressure 2.6.3-1
2.6.4 Increased External Pressure 2.6.4-1
2.6.5 Vibration 2.6.5-1
2.6.6 Water Spray 2.6.6-1
2.6.7 Free Drop (1 Foot) 2.6.7-1
2.6.8 Corner Drop 2.6.8-1
2.6.9 Compression 2.6.9-1
2.6.10 Penetration 2.6.10-1
2.6.11 Fabrication Conditions 2.6.11-1
2.6.12 Fuel Basket Analysis 2.6.12-1
2.7.0 Hypothetical Accident Conditions 2.7-1
2.7.1 Free Drop (30 Feet) 2.7.1-1
2.7.2 Puncture 2.7.2-1
2.7.3 Fire 2.7.3-1
2.7.4 Immersion - Fissile Material 2.7.4-1
2.7.5 Immersion – Irradiated Nuclear Fuel Packages 2.7.5-1
2.7.6 Damage Summary 2.7.6-1
2.7.7 Fuel Basket Accident Analysis 2.7.7-1
2.8.0 Special Form 2.8-1
2.9.0 Spent Fuel Contents 2.9-1
2.9.1 PWR and BWR Fuel Rods 2.9-1
2.9.2 TRIGA Fuel Elements 2.9-1

MASTER TABLE OF CONTENTS (continued)

2.9.3 PULSTAR Intact Fuel Assemblies 2.9-5
2.9.4 ANSTO Fuels 2.9-6
2.10.0 Appendices 2.10.1-1
2.10.1 Computer Program Descriptions 2.10.1-1
2.10.2 Finite Element Model Description 2.10.2-1
2.10.3 Finite Element Evaluations 2.10.3-1
2.10.4 Oblique Drop Slapdown 2.10.4-1
2.10.5 Lead Slump - End Drop 2.10.5-1
2.10.6 Inner Shell Buckling Design Criteria and Evaluation 2.10.6-1
2.10.7 Detailed Finite Element Stress Summary 2.10.7-1
2.10.8 Quarter-Scale Model Drop Test Program for the NAC-LWT Cask. 2.10.8-1
2.10.9 Bolts – Closure Lid (Stress Evaluations) 2.10.9-1
2.10.10 Finite Element Stress Results for the 30-Foot Drop Accident Conditions 2.10.10-1
2.10.11 Hand Calculation for the 30-Foot Drop Accident Conditions 2.10.11-1
2.10.12 Impact Limiter Force-Deflection Curves and Data 2.10.12-1
2.10.13 Structural Evaluation of Failed Fuel Cans and Liners 2.10.13-1
2.10.14 Structural Evaluation of the NAC-LWT Cask Body with TPBAR Contents 2.10.14-1
2.10.15 NAC-LWT Alternate B Port Cover 2.10.15-1

3.0 THERMAL EVALUATION 3.1-1
3.1 Discussion 3.1-1
3.2 Thermal Properties of Materials 3.2-1
3.2.1 Conductive Properties 3.2-1
3.2.2 Radiative Properties 3.2-2
3.2.3 Convective Properties 3.2-3
3.3 Technical Specifications of Components 3.3-1
3.4 Thermal Evaluation for Normal Conditions of Transport 3.4-1
3.4.1 Thermal Model 3.4-1
3.4.2 Maximum Temperatures 3.4-31
3.4.3 Minimum Temperatures 3.4-32
3.4.4 Maximum Internal Pressures 3.4-32
3.4.5 Maximum Thermal Stresses 3.4-44
3.4.6 Evaluation of Package Performance for Normal Conditions of Transport 3.4-45

MASTER TABLE OF CONTENTS (continued)

3.5 Hypothetical Accident Thermal Evaluation 3.5-1
3.5.1 Finite Element Models 3.5-1
3.5.2 Package Conditions and Environment 3.5-3
3.5.3 Package Temperatures 3.5-5
3.5.4 Maximum Internal Pressure 3.5-12
3.5.5 Maximum Thermal Stresses 3.5-16
3.5.6 Evaluation of Package Performance for Hypothetical Accident Thermal Conditions 3.5-16
3.5.7 Assessment of the Effects of the Fission Gas Release in the Fire Accident Condition 3.5-16
3.6 Failed Metallic Fuel Basket – SCOPE Evaluations 3.6-1

4.0 CONTAINMENT 4.1-1
4.1 Containment Boundary 4.1-1
4.1.1 Containment Penetrations 4.1-1
4.1.2 Seals and Welds 4.1-1
4.1.3 Closure 4.1-3
4.2 Containment Requirements for Normal Conditions of Transport 4.2-1
4.2.1 Containment of Radioactive Material 4.2-1
4.2.2 Pressurization of Containment Vessel 4.2-8
4.2.3 Containment Criteria 4.2-9
4.3 Containment Requirements for Hypothetical Accident Conditions 4.3-1
4.3.1 Fission Gas Products 4.3-1
4.3.2 Containment of Radioactive Materials 4.3-1
4.3.3 Containment Criteria 4.3-3
4.3.4 Tritium Permeation Rate of Seals for TPBAR Shipment 4.3-3
4.3.5 Tritium Contamination Issues 4.3-5
4.4 Special Requirements 4.4-1
4.5 Appendices 4.5-1
4.5.1 Tetrafluoroethylene O-Rings 4.5-1
4.5.2 Metallic O-Rings 4.5-10
4.5.3 Viton® O-Rings 4.5-23
4.5.4 SAS2H Output and Group A2 Values for Design Basis PWR, BWR, TRIGA, MTR and DIDO Fuel 4.5-29
4.5.5 Containment Analysis of MTR Fuel Elements 4.5-51

MASTER TABLE OF CONTENTS (continued)

4.5.6 Evaluation of Normal Conditions Allowable Leakage Rate for 25 BWR High Burnup Rods with up to 14 Damaged Rods 4.5-58
4.5.7 Containment Analysis of DIDO Fuel Assemblies 4.5-62
4.5.8 Containment Analysis for PULSTAR Fuel Elements 4.5-69
4.5.9 Metallic Face Seal 4.5-75
4.5.10 Containment Analysis of ANSTO Basket Payloads 4.5-87

5.0 SHIELDING EVALUATION 5-1
5.1 Discussion and Results 5.1-1
5.2 Gamma and Neutron Sources 5.2-1
5.3 Model Specification 5.3-1
5.3.1 Description of Radial and Axial Shielding Configuration 5.3-1
5.3.2 Shield Regional Densities 5.3-2
5.3.3 Metallic Fuel Configuration 5.3-2
5.3.4 MTR Fuel Configuration 5.3-12
5.3.5 25 PWR Fuel Rods Configuration 5.3-28
5.3.6 TRIGA Fuel Element Model Specification and Shielding Evaluation .. 5.3-32
5.3.7 TRIGA Fuel Cluster Rod Model Specification and Shielding Evaluation 5.3-51
5.3.8 High Burnup PWR and BWR Rods Shielding Evaluation 5.3-62
5.3.9 DIDO Fuel Configuration 5.3-88
5.3.10 GA IFM Shielding Evaluation 5.3-115
5.3.11 High Burnup PWR and BWR Rods in a Fuel Assembly Lattice 5.3-129
5.3.12 Damaged High Burnup PWR and BWR Rods in a Rod Holder 5.3-177
5.3.13 TPBAR Shielding Evaluation 5.3-204
5.3.14 PULSTAR Fuel Configuration 5.3-221
5.3.15 Spiral Fuel Assembly Configuration 5.3-243
5.3.16 MOATA Plate Bundle Configuration 5.3-252
5.4 Shielding Evaluation 5.4-1

6.0 CRITICALITY EVALUATION 6-1
6.1 Discussion and Results 6.1-1
6.2 Package Fuel Loading 6.2-1
6.2.1 PWR Fuel Assemblies 6.2-1
6.2.2 BWR Fuel Assemblies 6.2-4
6.2.3 MTR Fuel Elements 6.2-7

MASTER TABLE OF CONTENTS (continued)

6.2.4 PWR and BWR Rods in a Rod Holder or Fuel Assembly Lattice 6.2-14
6.2.5 TRIGA Fuel Elements 6.2-14
6.2.6 TRIGA Fuel Cluster Rods 6.2-20
6.2.7 Metallic Fuel Rods 6.2-23
6.2.8 DIDO Fuel Assemblies 6.2-25
6.2.9 General Atomics Irradiated Fuel Material 6.2-28
6.2.10 PULSTAR Fuel Elements 6.2-32
6.2.11 Spiral Fuel Assemblies 6.2-35
6.2.12 MOATA Plate Bundles 6.2-38
6.3 Criticality Model Specifications 6.3-1
6.3.1 PWR Fuel Assemblies 6.3-1
6.3.2 BWR Fuel Assemblies 6.3-7
6.3.3 MTR Fuel Elements 6.3-11
6.3.4 PWR and BWR Rods in a Rod Holder or Fuel Assembly Lattice 6.3-19
6.3.5 TRIGA Fuel Elements and Cluster Rods 6.3-28
6.3.6 DIDO Fuel Assemblies 6.3-39
6.3.7 General Atomics Irradiated Fuel Material 6.3-48
6.3.8 PULSTAR Fuel Contents 6.3-52
6.3.9 ANSTO Basket Payload 6.3-59
6.4 Criticality Calculations 6.4-1
6.4.1 PWR Fuel Assemblies 6.4-1
6.4.2 BWR Fuel Assemblies 6.4-10
6.4.3 MTR Fuel Elements 6.4-19
6.4.4 PWR and BWR Rods in a Rod Holder or Fuel Assembly Lattice 6.4-53
6.4.5 TRIGA Fuel Elements 6.4-78
6.4.6 TRIGA Fuel Cluster Rods 6.4-97
6.4.7 DIDO Fuel Assemblies 6.4-113
6.4.8 General Atomics Irradiated Fuel Material 6.4-126
6.4.9 PULSTAR Fuel Contents 6.4-140
6.4.10 ANSTO Basket Payloads 6.4-150
6.5 Critical Benchmarks 6.5-1
6.5.1 PWR and BWR Fuel Assemblies 6.5-1
6.5.2 MTR and DIDO Fuel Elements 6.5-14
6.5.3 TRIGA Fuel Elements 6.5-18
6.6 Appendix 6.6-1
6.6.1 PWR Fuel Assemblies 6.6-2

MASTER TABLE OF CONTENTS (continued)

6.6.2 BWR Fuel Assemblies 6.6-113
6.6.3 MTR Fuel Elements 6.6-169
6.6.4 Intact PWR and BWR Fuel Rods in a Rod Holder or Fuel Assembly Lattice 6.6-242
6.6.5 TRIGA Fuel Elements 6.6-319
6.6.6 TRIGA Fuel Cluster Rods 6.6-420
6.6.7 MTR Fuel Bounding Configuration 6.6-496
6.6.8 DIDO Fuel Assemblies 6.6-580
6.6.9 General Atomics Irradiated Fuel Material 6.6-763
6.6.10 Damaged Fuel Rods in a Rod Holder 6.6-815
6.6.11 PULSTAR Fuel Elements in the LWT Cask 6.6-848
6.6.12 Spiral Fuel Assemblies in the LWT Cask 6.6-895
6.6.13 MOATA Plate Bundles in the LWT Cask 6.6-914
6.6.14 High Fissile Mass LEU (32g ^{235}U per Plate) MTR Fuel Elements... 6.6-936

7.0 OPERATING PROCEDURES 7-1
7.1 Procedures for Loading Packages 7.1-1
7.1.1 Procedures for Wet Loading of LWR Fuel 7.1-1
7.1.2 Procedures for Dry Loading of Metallic Fuel 7.1-5
7.1.3 Procedures for Loading Metallic Fuel and Filters Containing Severely Failed Metallic Fuel into Failed Fuel Canisters 7.1-9
7.1.4 Procedures for Dry Loading of DIDO and MTR Fuel Baskets into the NAC-LWT Cask 7.1-12
7.1.5 Procedure for Preferential Loading of the MTR Fuel Basket 7.1-18
7.1.6 Procedure for Dry Loading of TRIGA Fuel Basket Modules and GA IFM Modules into the NAC-LWT Cask 7.1-33
7.1.7 Procedure for Loading TRIGA Failed Fuel or Fuel Debris into TRIGA Sealed Failed Fuel Cans 7.1-40
7.1.8 Procedure for Wet Loading of PWR/BWR Fuel Rods into the PWR/BWR Transport Canister 7.1-41
7.1.9 Procedure for Wet Loading of TPBAR Consolidation Canister into the NAC-LWT Cask 7.1-43
7.1.10 Procedure for Dry Loading of PULSTAR Fuel into the NAC-LWT Cask 7.1-48
7.1.11 Procedure for Dry Loading of TPBAR Waste Container 7.1-53

MASTER TABLE OF CONTENTS (continued)

7.2 Procedures for Unloading Package 7.2-1
7.2.1 Procedures for Wet Unloading of LWR Fuel 7.2-1
7.2.2 Procedures for Wet Unloading of Metallic Fuel 7.2-3
7.2.3 Procedure for Wet Unloading of MTR, TRIGA, DIDO or PULSTAR Fuel Contents 7.2-6
7.2.4 Procedure for Dry Unloading of MTR, TRIGA, DIDO or PULSTAR Fuel Contents or the TPBAR Consolidation Canister 7.2-9
7.2.5 Procedure for Dry Unloading of TPBAR Contents 7.2-11
7.3 Procedures for Preparation of the Empty Package for Transport 7.3-1

8.0 ACCEPTANCE TESTS AND MAINTENANCE PROGRAM 8-1
8.1 Acceptance Tests 8.1-1
8.1.1 Visual Inspection 8.1-1
8.1.2 Structural and Pressure Tests 8.1-2
8.1.3 Leak Tests 8.1-3
8.1.4 Component Tests 8.1-8
8.1.5 Tests for Shielding Integrity 8.1-9
8.1.6 Thermal Acceptance Tests 8.1-10
8.1.7 Neutron Absorber Tests 8.1-11
8.2 Maintenance Program 8.2-1
8.3 Appendix 8.3-1
8.3.1 General Description 8.3-1
8.3.2 Preparation 8.3-1
8.3.3 Pouring Procedure 8.3-2
8.3.4 Cooling Process 8.3-2

9.0 REFERENCES 9-1

Chapter 1

TABLE OF CONTENTS

1.0 GENERAL INFORMATION 1-1

1.1 Introduction 1.1-1

1.2 Package Description 1.2-1
1.2.1 Packaging 1.2-1
1.2.2 Operational Features 1.2-4
1.2.3 Contents of Packaging 1.2-5

1.3 Quality Assurance 1.3-1

1.4 License Drawings 1.4-1

1.5 Unclassified DOE Reference Documents and Drawings 1.5-1

Chapter 1 Appendices

Appendix 1-A – TTQP-1-015, "Description of the Tritium-Producing Burnable Absorber Rod for the Commercial Light Water Reactor," Revision 14

Appendix 1-B – TTQP-1-091, "Unclassified TPBAR Releases, Including Tritium," Revision 11

Appendix 1-C – TTQP-1-111, "Unclassified Bounding Source Term, Radionuclide Concentrations, Decay Heat, and Dose Rates for the Production TPBAR," Revision 5

Appendix 1-D – DOE Drawing H-3-307845, "Production TPBAR Reactor Interface Dimensions Watts Bar," Revision 10, Sheet 1 of 2

Appendix 1-E – DOE Drawing H-3-308875, "Production TPBAR Reactor Interface Dimensions Sequoyah," Revision 5, Sheet 1 of 2

Appendix 1-F – DOE Drawing H-3-310568, "Mark 8.1 Multi-Pencil TPBAR – Watts Bar Reactor Interface," Revision 0, Sheet 1 of 2

Appendix 1-G – PNNL Letter, TTP-06-056, Subject: Exposure of Shipping Cask to Tritium, dated February 21, 2006

LIST OF FIGURES

Figure 1.2-1 Aluminum Clad TRIGA Fuel Element 1.2-17
Figure 1.2-2 Aluminum Clad Instrumented Fuel Element 1.2-18
Figure 1.2-3 Stainless Steel Clad TRIGA Fuel Element 1.2-19
Figure 1.2-4 Stainless Steel Clad Instrumented Fuel Element 1.2-20
Figure 1.2-5 Standard Fuel Follower Control Rod Element 1.2-21
Figure 1.2-6 TRIGA Fuel Cluster and Rod Details 1.2-22
Figure 1.2-7 HTGR Fuel Handling Unit 1.2-23
Figure 1.2-8 RERTR Fuel Handling Unit 1.2-24
Figure 1.2-9 Typical TPBAR Assembly 1.2-25
Figure 1.2-10 TPBAR Consolidation Canister Sketch 1.2-26
Figure 1.2-11 Failed PWR/BWR Fuel Rod Capsule 1.2-27
Figure 1.2-12 NAC-LWT with TPBAR Consolidation Canister Payload 1.2-28
Figure 1.2-13 PULSTAR Fuel Assembly 1.2-29
Figure 1.2-14 Spiral Fuel Assembly Cross-Section Sketch 1.2-30
Figure 1.2-15 MOATA Plate Bundle Sketches 1.2-31
Figure 1.2-16 TPBAR Waste Container and Extension Weldment Sketch 1.2-32
Figure 1.2-17 NAC-LWT with TPBAR Waste Container Payload 1.2-33

LIST OF TABLES

Table 1-1 Terminology and Notation 1-2
Table 1.2-1 Characteristics of Design Basis TRIGA Fuel Elements 1.2-34
Table 1.2-2 Characteristics of Design Basis TRIGA Fuel Elements – Fuel Compositions.. 1.2-35
Table 1.2-3 Characteristics of Design Basis TRIGA Fuel Cluster Rods 1.2-35
Table 1.2-4 Fuel Characteristics 1.2-36
Table 1.2-5 PWR Fuel Characteristics 1.2-39
Table 1.2-6 BWR Fuel Characteristics 1.2-40
Table 1.2-7 Characteristics of General Atomics Irradiated Fuel Material (GA IFM) 1.2-41
Table 1.2-8 Typical Production TPBAR Characteristics 1.2-42
Table 1.2-9 PULSTAR Fuel Characteristics 1.2-43
Table 1.2-10 Spiral Fuel Assembly Characteristics 1.2-44
Table 1.2-11 MOATA Plate Bundle Characteristics 1.2-45
Table 1.2-12 Typical TPBAR Segment Characteristics in Waste Container 1.2-46

LIST OF DRAWINGS

315-40-01		Rev 6	Legal Weight Truck Transport Cask Assembly
315-40-02	Sheets 1 – 2	Rev 19	NAC-LWT Cask Body Assembly
315-40-03	Sheets 1 – 6	Rev 6	NAC-LWT Transport Cask Body
315-40-03	Sheets 1 – 7	Rev 22	NAC-LWT Transport Cask Body
315-40-04		Rev 10	NAC-LWT Transport Cask Lid Assembly
315-40-05		Rev 9	NAC-LWT Transport Cask Upper Impact Limiter
315-40-06		Rev 9	NAC-LWT Transport Cask Lower Impact Limiter
315-40-08	Sheets 1 – 5	Rev 16	NAC-LWT Transport Cask Parts Detail
315-40-09		Rev 2	NAC-LWT PWR Basket Spacer
315-40-10	Sheets 1 – 2	Rev 7	NAC-LWT Cask PWR Basket
315-40-11		Rev 2	NAC-LWT BWR Fuel Basket Assembly
315-40-12		Rev 3	NAC-LWT Metal Fuel Basket Assembly
315-40-045		Rev 4	Weldment, 7 Element Basket, 42 MTR Fuel Base Module
315-40-046		Rev 4	Weldment, 7 Element Basket, 42 MTR Fuel Intermediate Module
315-40-047		Rev 4	Weldment, 7 Element Basket, 42 MTR Fuel Top Module
315-40-048		Rev 3	Legal Weight Truck Transport Cask Assembly, 42 MTR Element
315-40-049		Rev 4	Weldment, 7 Element Basket, 28 MTR Fuel Base Module
315-40-050		Rev 4	Weldment, 7 Element Basket, 28 MTR Fuel Intermediate Module
315-40-051		Rev 4	Weldment, 7 Element Basket, 28 MTR Fuel Top Module
315-40-052		Rev 3	Legal Weight Truck Transport Cask Assembly, 28 MTR Element
315-40-070		Rev 3	Weldment, 7 Cell Basket, TRIGA Fuel Base Module
315-40-071		Rev 3	Weldment, 7 Cell Basket, TRIGA Fuel Intermediate Module
315-40-072		Rev 3	Weldment, 7 Cell Basket, TRIGA Fuel Top Module
315-40-074		Rev 2	Lid Assembly, Screened Failed Fuel Can, TRIGA Fuel
315-40-075		Rev 1	Assembly, Screened Failed Fuel Can, TRIGA Fuel
315-40-076		Rev 1	Body, Screened Failed Fuel Can, TRIGA Fuel
315-40-079		Rev 3	Legal Weight Truck Transport Cask Assy, TRIGA Fuel
315-040-080		Rev 2	Weldment, 7 Cell Poison Basket, TRIGA Fuel Base Module
315-040-081		Rev 2	Weldment, 7 Cell Poison Basket, TRIGA Fuel Intermediate Module
315-040-082		Rev 2	Weldment, 7 Cell Poison Basket, TRIGA Fuel Top Module
315-040-083		Rev 0	Spacer, LWT Cask Assembly, TRIGA Fuel
315-40-084		Rev 3	Legal Weight Truck Transport Cask Assy, 140 TRIGA Elements
315-40-085		Rev 0	Axial Fuel and Cell Block Spacers, MTR and TRIGA Fuel Baskets, NAC-LWT Cask
315-40-086		Rev 1	Assembly, Sealed Failed Fuel Can, TRIGA Fuel
315-40-087		Rev 5	Canister Lid Assembly, Sealed Failed Fuel Can, TRIGA Fuel
315-40-088		Rev 2	Canister Body Assembly, Sealed Failed Fuel Can, TRIGA Fuel
315-40-090		Rev 2	Weldment, 7 Element Basket, 35 MTR Fuel Base Module
315-40-091		Rev 2	Weldment, 7 Element Basket, 35 MTR Fuel Intermediate Module
315-40-092		Rev 2	Weldment, 7 Element Basket, 35 MTR Fuel Top Module
315-40-094		Rev 4	Legal Weight Truck Transport Cask Assembly, 35 MTR Element
315-40-096		Rev 2	Fuel Rod Insert, TRIGA Fuel
315-40-098	Sheets 1 - 2	Rev 3	Can Assembly, LWT Pin Shipment
315-40-099	Sheets 1 - 3	Rev 3	Can Weldment, PWR/BWR Transport Canister

LIST OF DRAWINGS (continued)

315-40-100	Sheets 1 - 3	Rev 3	Lids, PWR/BWR Transport Canister
315-40-101		Rev 0	4 X 4 Insert, PWR/BWR Transport Canister
315-40-102		Rev 1	5 X 5 Insert, PWR/BWR Transport Canister
315-40-103		Rev 0	Pin Spacer, PWR/BWR Transport Canister
315-40-104	Sheets 1 - 2	Rev 2	Legal Weight Truck Transport Cask Assy, PWR Transport Canister
315-40-105	Sheets 1 - 2	Rev 3	PWR Insert PWR/BWR Transport Canister
315-40-106	Sheets 1 - 3	Rev 1	MTR Plate Canister, LWT Cask
315-40-108	Sheets 1 - 3	Rev 1	Weldment, 7 Cell Basket, Top Module, DIDO Fuel
315-40-109	Sheets 1 - 3	Rev 1	Weldment, 7 Cell Basket, Intermediate Module, DIDO Fuel
315-40-110	Sheets 1 - 3	Rev 1	Weldment, 7 Cell Basket, Base Module, DIDO Fuel
315-40-111		Rev 1	Legal Weight Truck, Transport Cask Assy, DIDO Fuel
315-40-113		Rev 0	Spacers, Top Module, DIDO Fuel
315-40-120	Sheets 1 - 3	Rev 2	Top Module, General Atomics IFM, LWT Cask
315-40-123	Sheets 1 - 2	Rev 1	Spacer, General Atomics IFM, LWT Cask
315-40-124		Rev 1	Transport Cask Assembly, General Atomics IFM, LWT Cask
315-40-125	Sheets 1 - 3	Rev 3	Transport Cask Assembly, Framatome/EPRI, LWT Cask
315-40-126	Sheets 1 - 2	Rev 2	Weldments, Framatome/EPRI, LWT Cask
315-40-127	Sheets 1 - 2	Rev 2	Spacer Assembly, TPBAR Shipment, LWT Cask
315-40-128	Sheets 1 - 2	Rev 2	Legal Weight Truck, Transport Cask Assy, TPBAR Shipment
032230		Rev A	RERTR Secondary Enclosure, General Atomics
032231		Rev A	HTGR Secondary Enclosure, General Atomics
032236		Rev B	RERTR Primary Enclosure, General Atomics
032237		Rev B	HTGR Primary Enclosure, General Atomics
315-40-129		Rev 1	Canister Body Assembly, Failed Fuel Can, PULSTAR
315-40-130		Rev 1	Assembly, Failed Fuel Can, PULSTAR
315-40-133	Sheets 1 - 2	Rev 1	Transport Cask Assembly, PULSTAR Shipment, LWT Cask
315-40-134		Rev 1	Body Weldment, Screened Fuel Can, PULSTAR Fuel
315-40-135		Rev 1	Assembly, Screened Fuel Can, PULSTAR Fuel
315-40-139		Rev 0	Legal Weight Truck Transport Cask Assy, ANSTO Fuel
315-40-140	Sheets 1 - 2	Rev 0	Weldment, 7 Cell Basket, Top Module, ANSTO Fuel
315-40-141	Sheets 1 - 2	Rev 0	Weldment, 7 Cell Basket, Intermediate Module, ANSTO Fuel
315-40-142	Sheets 1 - 2	Rev 0	Weldment, 7 Cell Basket, Base Module, ANSTO Fuel

1.0 GENERAL INFORMATION

This chapter of the NAC International, Legal Weight Truck spent fuel shipping cask (NAC-LWT) Safety Analysis Report (SAR) presents a general introduction to, and description of, the NAC-LWT cask. Terminology used throughout this report is presented in Table 1-1.

Authorization is sought for shipment of the NAC-LWT cask by truck, ISO container, and/or by railcar, as a Type B(U)F-96 package, as defined in 10 CFR 71.4 for the following contents:

- PWR and BWR fuel assemblies[1];
- MTR fuel assemblies and plates;
- DIDO fuel assemblies, metallic fuel rods;
- PWR and BWR fuel rods;
- TRIGA fuel elements and TRIGA fuel cluster rods;
- General Atomics (GA) High-Temperature Gas-Cooled Reactor (HTGR) and Reduced-Enrichment Research and Test Reactor (RERTR) Irradiated Fuel Materials (IFM); and
- PULSTAR fuel elements.

Authorization is also sought for shipment of the NAC-LWT cask by truck, ISO container, and/or by railcar, as a Type B(M)-96 package, as defined in 10 CFR 71.4 for the following contents:

- Production Tritium Producing Burnable Absorber Rods (TPBARs); and
- TPBAR segments and debris.

In accordance with 10 CFR 71.59, the NAC-LWT cask is assigned a Criticality Safety Index (CSI) for criticality control of the approved contents as follows:

- 100 for PWR assemblies;
- 33.4 for damaged PULSTAR fuel elements;
- 12.5 for DIDO fuel assemblies;
- 5 for BWR assemblies; and
- 0 for metallic fuels, spiral fuel assemblies, MOATA plate bundles, PWR and BWR rods, MTR fuel assemblies, TRIGA fuel elements and fuel cluster rods, GA IFM elements, and intact PULSTAR fuel elements .

[1] NAC-LWT casks containing PWR and BWR fuel assemblies are to be transported on an open trailer with a personnel barrier.

TPBARs do not contain fissile material and criticality assessment is not required. A CSI of 0 is assigned for documentation purposes.

The estimated Transport Index (TI) for shielding for these contents is shown in Table 5.1-1. The actual TI for individual shipments will be determined in accordance with 10 CFR 71.4 by the licensee.

14. Damaged PULSTAR fuel elements and nonfuel components of PULSTAR fuel assemblies shall be loaded into either a PULSTAR failed fuel or screened fuel can, and placed into the top or base module of the 28 MTR fuel basket. Damaged fuel, including fuel debris, may be placed in an encapsulating rod prior to loading in a PULSTAR can.

15. Any combination of spiral fuel assemblies or MOATA plate bundles, each loaded into separate ANSTO basket modules containing up to a total of 42 assemblies/bundles.

16. Segmented TPBARs will be shipped in a sealed, dry Waste Container as shown in Figure 1.2-16 and assembled in the cask as shown in Figure 1.2-17.

1.2.3.1 TRIGA Fuel and Basket Description

Two basic types of TRIGA fuel are to be transported in the NAC-LWT cask: TRIGA fuel elements and smaller fuel rods from TRIGA fuel cluster assemblies. TRIGA fuel elements are approximately 1-1/2 inches in diameter and are described in Section 1.2.3.1.1.1. TRIGA fuel cluster rods are smaller, approximately 1/2-inch in diameter and are described in Section 1.2.3.1.1.2.

Up to 140 TRIGA fuel elements in the form of: a) standard fuel elements – either aluminum clad or stainless steel clad; b) instrumented fuel elements – similar to standard fuel elements (aluminum clad or stainless steel clad), but containing thermocouple instrumentation; and c) fuel follower control rod elements (aluminum or stainless steel clad) – poison rods with a fuel follower in a single tube may be shipped in the NAC-LWT cask. Up to 560 TRIGA fuel cluster rods may also be shipped. Failed fuel and fuel debris are shipped in sealed failed fuel cans. The transport baskets and failed fuel cans are described in Section 1.2.3.1.2.

1.2.3.1.1 TRIGA Fuel

1.2.3.1.1.1 TRIGA Fuel Elements

The design basis TRIGA fuel element characteristics are presented in Tables 1.2-1 and 1.2-2.

The fuel material in a TRIGA fuel element is a solid, homogeneous mixture of uranium-zirconium hydride alloy, i.e., a metal alloy fuel. A 0.25-inch diameter hole is drilled through the center of the active fuel section to facilitate hydriding; a 0.225-inch diameter zirconium rod is inserted in this hole after hydriding is complete. Both the aluminum-clad and the stainless steel-clad TRIGA fuel elements are 1.5-inch diameter rods by 30 inches long. The fuel follower control rod elements are 1.5-inch diameter rods ranging from 45 inches to 66.5 inches long. Instrumented fuel elements are identical to standard fuel elements with the exception of thermocouples and wires and lead-out tubing. The lead-out tubing needs to be detached prior to shipment in order for the instrumented fuel elements to fit into the standard element height

envelope. The aluminum-clad TRIGA fuel element and instrumented fuel element, the stainless steel-clad TRIGA fuel element and instrumented fuel element, and the standard fuel follower control rod element are shown in Figures 1.2-1 through 1.2-5, respectively.

The active fuel region of each aluminum-clad TRIGA fuel element is approximately 1.4 inches in diameter, 14 or 15 inches in length, and has an initial uranium enrichment of up to 20 percent. Each fuel element is clad with a 0.03-inch thick aluminum cladding. Two sections of graphite are inserted in the can, one above and one below the active fuel region, to serve as top and bottom reflectors for the core. Aluminum end fixtures are attached to both ends of the can. The stainless steel-clad TRIGA fuel element is very similar to the aluminum-clad fuel element, but is clad with a 0.02-inch thick stainless steel cladding, has a variety of end fittings, and has an initial uranium enrichment up to 70 percent. The design-basis TRIGA fuel element characteristics are summarized in Tables 1.2-1, 1.2-2, 1.2-4, 5.1-1, 5.1-2, 5.1-3, 6.2.5-1, and 6.2.5-2.

An instrumented TRIGA fuel element, either aluminum clad or stainless steel clad, is identical to a standard fuel element, but has three thermocouples embedded in the active fuel region. One or two instrumented elements are normally used in a reactor core to measure temperature. The thermocouple lead-out wires pass through a seal contained in a 3-inch long tube that is welded to the upper end fixture of the fuel element. The tube is extended by two lengths of tubing connected by unions to provide a watertight conduit carrying the lead-out above the water surface in the reactor pool. Prior to shipment, the instrumentation tubing is removed from the element.

A TRIGA reactor core may contain up to six fuel follower control rods. There are three types of fuel follower control rods: a safety rod, a regulating rod, and a shim rod. Although the three types are basically the same element, they each serve a different function within the core. The standard fuel follower control rod element is an aluminum or stainless steel clad element that is approximately 45 inches long, 1.35 inches in diameter, and has a wall thickness of 0.02 inch (stainless steel) or 0.03 inch (aluminum). The uppermost 6.5-inch section is an air void and the next 15 inches is solid boron carbide neutron absorber. Below the neutron absorber is a fuel follower section consisting of 15 inches of U-ZrH fuel. The bottom section of the rod has a 6.5-inch air void.

Axial fuel spacers, as shown on Drawing 315-40-085, may be used to axially position the TRIGA fuel elements. The axial spacers do not provide a safety function and are dunnage used to position the fuel elements to facilitate fuel handling. The total weight per basket module cell for the TRIGA fuel elements or cluster rods, spacer(s) and fuel cans, as applicable, shall be limited to a maximum of 80 pounds.

1.2.3.1.1.2 TRIGA Fuel Cluster Rods

The design basis TRIGA cluster rod characteristics are shown in Table 1.2-3.

The fuel material in TRIGA fuel cluster rods is a solid, homogeneous mixture of uranium-zirconium-erbium hydride alloy, i.e., a metal alloy fuel. Erbium is a burnable neutron poison that is used in the fuel to enhance the flux profile along the length of the fuel rod, and is conservatively ignored in the nuclear evaluations. The rods have an external diameter of approximately 0.55 inch and are approximately 31 inches long. The rod cladding is Incoloy 800 material and is 0.015 inch thick, minimum. Instrumented rods are identical to the standard rods, with the exception of thermocouples and wires. A diagram of the TRIGA fuel cluster rods, and the individual fuel pin (cluster rod) making up the cluster, is shown in Table 1.2-6.

The active fuel region of a TRIGA fuel cluster rod is a maximum of 0.53 inch in diameter, 22.5 inches in length, and has an initial uranium enrichment of up to 93.3 percent. A compression spring is utilized to fill the space in the plenum region of the rod, and top and bottom plugs are used to seal the fuel within the rod. The design-basis TRIGA fuel cluster rod characteristics are summarized in Tables 1.2-3, 1.2-4, 5.1-1, 5.1-2, 6.2.6-1, and 6.2.6-2.

1.2.3.1.1.3 TRIGA Fuel Classification

The TRIGA fuel contents are divided into three categories based on fuel condition for evaluation, loading configuration and transport in the NAC-LWT:

1) Intact fuel, including fuel elements and cluster rods with no more than minor cladding failures (hairline cracks and pinhole leaks), are loaded directly into the TRIGA fuel basket modules (Section 1.2.3.1.2) with a maximum of four fuel elements per loading position. Intact cluster rods are loaded into fuel rod inserts (Drawing 315-40-096) that are inserted into the TRIGA fuel basket module cell openings. Intact fuel elements may be loaded into a screened failed fuel can if length permits.

2) Failed fuel and fuel debris are to be loaded into sealed failed fuel cans (Section 1.2.3.1.2) that are not required to be leak tested prior to shipment. The failed fuel and fuel debris are loaded into a sealed failed fuel can which is loaded into either a base or a top module (the can length precludes it being loaded into an intermediate module) of the TRIGA fuel basket, which is then stacked into the NAC-LWT.

1.2.3.1.2 TRIGA Fuel Baskets and Failed Fuel Cans

The TRIGA fuel basket assembly configurations consist of five modules – a base module, 3 intermediate modules, and a top module. The 3 intermediate modules are interchangeable, but the base and top modules are required to be in their proper positions. Two basket configurations are available, "nonpoisoned" and "poisoned," where the poisoned basket configuration utilizes borated steel plates for additional criticality control. Each module has up to 7 cells (fuel

positions) for loading TRIGA fuel elements or cluster rods. The center cell of each module of the nonpoisoned basket configuration is blocked by a welded stainless steel baffle that prevents loading of that cell. The nonpoisoned configuration is also referred to as the 24-element basket or the 120-element loading, based on the maximum of 120 intact TRIGA fuel elements that may be loaded into the baskets in this configuration. The poisoned configuration is also referred to as the 28-element basket or the 140-element loading, based on the maximum of 140 intact TRIGA fuel elements that may be loaded into the baskets in this configuration. Additionally, the nonpoisoned configuration can accommodate up to 480 intact TRIGA fuel cluster rods, while the poisoned basket can hold up to 560 intact TRIGA fuel cluster rods. Each basket module is a Type 304 stainless steel weldment consisting of longitudinal divider plates with circular support plates near each end; the top module also has a support plate at its midpoint due to its longer length. In addition, the poisoned basket modules contain four borated stainless steel plates that are seal welded to surfaces of the divider plates in the central region of the basket cross-section. The non-poisoned basket modules are shown in Drawings 315-40-070, -071, and -072 included in Section 1.4. The poisoned basket modules are shown in Drawings 315-40-080, -081, and -082.

The nonpoisoned TRIGA fuel basket assembly in the NAC-LWT cask is shown in Drawing 315-40-079. The poisoned basket assembly in the NAC-LWT cask is shown in Drawing 315-40-084. In the poisoned basket configuration, an alternate assembly is presented that utilizes one base module and four intermediate modules, along with a spacer (Drawing 315-40-083). The spacer is utilized to fill the space differential in the cask cavity resulting from the use of an additional intermediate module, rather than a top module. This additional assembly configuration is provided for flexibility in situations where the extra length provided by the top module is not needed. The fuel basket modules are described in further detail in Section 2.6.12.8.

As described in Section 1.2.3.1.1.3, intact TRIGA fuel elements may be loaded into a screened failed fuel can to facilitate handling of the fuel elements. Up to 4 TRIGA fuel elements may be loaded into each screened failed fuel can. The screened failed fuel can may be loaded into either a base or a top basket module of the TRIGA fuel basket assembly. The screened failed fuel can is a tube, approximately 3-1/4 inches square, constructed of 14 gage sheet. The bottom of the screened failed fuel can is a perforated 1/2-inch thick plate with the openings covered by a 250 mesh filter screen. The lid for the screened failed fuel can includes a bail for lifting and two spring-loaded plungers that engage slots in the side of the can for locking purposes. The screened failed fuel can is constructed of austenitic stainless steel as shown on Drawings 315-40-074, -075, and -076.

A sealed failed fuel can is designed to contain TRIGA failed fuel and fuel debris. The sealed failed fuel can contents are limited to 2 TRIGA fuel elements or 6 TRIGA fuel cluster rods. The sealed failed fuel can may be loaded into either a base or a top module (the can length precludes it from being loaded into an intermediate module) of the TRIGA fuel basket assembly. The sealed failed fuel can is a 3.25-inch outside diameter tube with a 0.065-inch thick wall. The bottom of the sealed failed fuel can includes a check valve and drain plug to facilitate draining of

the can. The top of the sealed failed fuel can is closed by a bolted lid that is sealed with a metallic O-ring and includes a diaphragm valve to facilitate draining, drying, and helium backfilling of the can. The sealed failed fuel can is constructed of austenitic stainless steels as shown on Drawings 315-40-086, -087, -088.

1.2.3.2 MTR and DIDO Fuel and Basket Description

The MTR fuel elements to be shipped are 33 to 57 inches long, including the upper and lower nonfuel-bearing hardware, which may be removed from the element prior to transport. The MTR element fuel plates consist of a U-Al, U_3O_8-Al, or U_3Si_2-Al fuel meat clad with aluminum. The fuel plates are held in a parallel arrangement with two thick aluminum slotted pieces to form a fuel element. The active fuel region is typically 22.75 inches in height, and the fuel meat is typically 0.023-inch thick. MTR elements/plates may contain cadmium wires. A maximum 100-gram cadmium source is addressed in the shielding evaluations documented in Chapter 5. Axial fuel spacers and plates may be used in the cells of the basket modules to position MTR elements to facilitate fuel unloading and handling. The axial fuel spacers do not perform a safety function and are considered dunnage. The axial fuel spacers and plates are shown on Drawing 315-40-085.

A maximum of 42 MTR fuel elements has been analyzed for transport in the NAC-LWT cask. This configuration consists of up to seven fuel elements placed radially in each of the six axial fuel basket modules. Two alternate configurations of MTR fuel element loading provide for loads of 35 elements in five basket modules or 28 elements in four basket modules. HEU MTR fuel elements having > 380 g ^{235}U, but less than 460 g ^{235}U, shall have a minimum of 2.0 cm (0.8 inch) of nonfuel hardware and/or spacers/plates at both ends of the fuel element. The minimum 2.0 cm nonfuel hardware and/or spacer/plate dimension assures criticality control. The axial fuel spacer and plate design is shown on Drawing 315-40-085. For the shipment of MTR fuel elements (or an equivalent number of plates in a plate canister) having ^{235}U greater than 470 g per element, or greater than 22 g per plate (up to a maximum of 640 g per element or 32 g per plate), the maximum quantity of elements per basket module is limited to four, which are to be loaded in basket positions 4, 5, 6 and 7. Cell block spacers shall be installed in basket openings 1, 2 and 3 to block these cells from being inadvertently loaded with fuel elements. The cell block spacer design is shown on Drawing 315-40-085. Therefore, for the transport of elements of greater than 470 g ^{235}U , if only one element exceeds the 470 g (22 g per plate) limit, a maximum of four elements shall be loaded into the seven-element basket module and cell block spacers shall be placed in basket opening positions 1, 2 and 3.

Loose MTR fuel plates may be shipped in an MTR plate canister to facilitate handling. The contents of the canister are limited to the number of plates in the original intact fuel assembly, and the fuel plate dimensions and fuel masses must be bounded by the MTR fuel element limits in Table 1.2-4. The total weight per basket module cell for the fuel element, spacer(s) and fuel plate canister, as applicable, shall be limited to a maximum of 80 pounds.

A maximum of 42 DIDO fuel assemblies has been analyzed for transport in the NAC-LWT cask. Again, up to seven fuel assemblies may be placed radially in each of six axial fuel basket modules.

DIDO fuel assemblies are similar to MTR fuel elements in that the fuel bearing hardware consists of plates of fuel meat sandwiched by cladding. However, in DIDO fuel, the plates have been formed into tubular elements that are arranged in a concentric configuration. Typical DIDO assemblies contain four of the concentric tubes.

MTR and DIDO fuel characteristics are presented in Table 1.2-4.

1.2.3.3 General Atomics Irradiated Fuel Material (GA IFM) and Basket Description

The GA IFM is made up of two separate types of fuel material—the High-Temperature Gas-Cooled Reactor (HTGR) type fuel and the Reduced-Enrichment Research and Test Reactor (RERTR) type fuel. Each type of IFM is packaged in its own unique Fuel Handling Unit (FHU). Figures 1.2-7 and 1.2-8 illustrate the HTGR and RERTR FHUs. Detailed drawings for the GA and IFM FHUs are in Section 1.4.

The HTGR IFM is comprised of fuel in four forms: fuel particles (kernels), fuel particles (coatings), fuel compacts (rods), and fuel pebbles. Fuel kernels are solid, spheridized, high-temperature sintered fully-densified, ceramic kernel substrate, composed of: UC_2, UCO, UO_2, $(Th,U)C_2$, or $(Th,U)O_2$. The as-manufactured enrichment of the HTGR fuel varies from ~10.0 to 93.15 wt % ^{235}U. Fuel coatings are solid, spheridized, isotropic, discrete multi-layered fuel particle coatings with chemical composition including pyrolitic-carbon (PyC) and silicon carbide (SiC). Fuel compacts are multi-coated ceramic fuel particles, bound in solid, cylindrical, injection-molded, high-temperature heat-treated compacts. The fuel compact matrix is composed of carbonized graphite shim, coke, and graphite powder. Fuel pebbles are multi-coated fuel particles, bound in solid, spherical injection-molded, high-temperature heat-treated pebbles. The fully-cured binding matrix is composed of carbonized graphite shim, coke , and graphite powder.

The RERTR IFM is comprised of 20 irradiated TRIGA fuel elements; 13 of the elements are intact and the remaining seven have been previously sectioned for examination purposes. Parameters characterizing the RERTR/TRIGA fuel elements are shown in Table 6.2.9-1. Three distinct mass loadings of uranium were used in the 20 TRIGA elements: 20, 30, and 45 wt % U; the average mass of the fueled portion of these elements is 551g with an enrichment of 19.7 wt % ^{235}U. The RERTR IFM consists of U-ZrH metal alloy fuel material and as a solid meets the requirement of 10 CFR 71.63.

Two GA IFM Fuel Handling Units (FHU) are intended for a single shipment in the NAC-LWT. The first IFM FHU contains HTGR type fuel and the second contains RERTR type fuel. Each IFM FHU consists of stainless steel weld-encapsulated primary and secondary enclosures. The FHUs are filled and sealed with air at atmospheric pressure. The two IFM FHUs are placed in

the top of the NAC-LWT cavity with a bottom spacer to facilitate unloading of the IFM packages.

The GA IFM fuel characteristics are presented in Table 1.2-7.

1.2.3.4 PWR Fuel

The NAC-LWT cask is analyzed for the PWR fuel assemblies listed in Table 1.2-5. This table provides the dimensional and enrichment constraints for the PWR fuel. The burnup and decay heat limits are specified in Table 1.2-4.

1.2.3.5 BWR Fuel

The NAC-LWT cask is analyzed for the BWR fuel assemblies listed in Table 1.2-6. This table provides the dimensional constraints for the BWR fuel. The enrichment, burnup and decay heat limits are specified in Table 1.2-4.

1.2.3.6 TPBARs

The NAC-LWT cask is analyzed for the transport of two separate Tritium Producing Burnable Absorber Rod (TPBAR) content configurations. For the transport of production TPBARs from the reactor facility to the DOE processing facility, an open (i.e., unsealed) stainless steel consolidation canister is utilized to contain up to 300 TPBARs, two of which can be prefailed. The characteristics of the production TPBARs are listed in Table 1.2-8. The consolidation canister assembly is shown in Figure 1.2-10.

The second transport configuration is for the shipment of segmented TPBARs, following post-irradiation examination (PIE), contained in a welded stainless steel waste container containing segments and debris from up to 55 TPBARs. The characteristics of the TPBAR PIE segments are provided in Table 1.2-12. The waste container and extension weldment assembly is shown in Figure 1.2-16.

TPBARs are similar in size and nuclear characteristics to standard, commercial PWR, stainless steel-clad burnable absorber rods. The exterior of a typical TPBAR is a stainless steel clad tube. The internal components of the TPBAR are designed and selected to produce and retain tritium. Internal configurations differ for various TPBAR designs (see DOE reports provided in the Chapter 1 Appendices). The internal components of a typical TPBAR include a plenum spacer tube (getter tube), a spring clip or a plenum (compression) spring, pellet stack assemblies (pencils), and a bottom spacer tube. A pencil consists of a zirconium alloy liner around which lithium aluminate absorber pellets are stacked and then confined in a getter tube as shown in Figure 1.2-9. The unclassified design details of the various TPBAR designs are provided in the unclassified DOE documents and drawings provided in the Chapter 1 Appendices.

The transport assembly arrangements for both TPBAR content configurations are identical and include a closure lid spacer assembly, a TPBAR basket and Alternate B port covers with bolting installed. The detailed requirements for the NAC-LWT assembly are provided in license

drawing 315-40-128 in Section 1.4. The overall payload arrangement for the NAC-LWT with the consolidation canister and waste container are shown in Figure 1.2-12 and Figure 1.2-17, respectively. For the transport of fewer than 300 TPBARs in the consolidation canister, stainless steel dunnage may be used to align and protect the contents. The weight and volume of the dunnage and the reduced TPBAR contents of the consolidation canister must be less than, or equal to, the weight and volume of 300 TPBARs.

The TPBAR content conditions are analyzed and evaluated for compliance with structural, thermal, containment and shielding conditions of the NAC-LWT in the appropriate SAR chapters. TPBARs do not contain fissile material and, therefore, criticality evaluations have not been performed. The operating procedures for the wet and dry loading and dry unloading of the TPBAR contents are provided in Chapter 7. The special leakage and pressure testing requirements for NAC-LWT casks intended for the transport of TPBAR contents are provided in Chapter 8.

1.2.3.7 Cladding for PWR/BWR Fuel

The PWR and BWR fuel rod cladding is of Zirconium alloy type (Zircaloy-2, Zircaloy-4, Zirlo, M-5, etc.). Minor variations of alloy composition have no impact on performance of cladding material.

1.2.3.8 PULSTAR Fuel Element and Transport Configuration Description

PULSTAR fuel elements are transported in the NAC-LWT in the 28 MTR fuel basket assembly, which contains four modules with seven cells per module. The basket assembly is composed of a top module, a base module, and two intermediate modules (Dwgs 315-40-051, -049, and -050, respectively).

PULSTAR fuel elements may be loaded into the module cells in one of four configurations: a) intact PULSTAR fuel assemblies b) intact PULSTAR fuel elements loaded into the 4×4 TRIGA fuel rod insert (Dwg. 315-40-096); c) intact or damaged PULSTAR fuel elements, fuel debris and nonfuel-bearing components of PULSTAR fuel assemblies in the PULSTAR screened can (Dwg. 315-40-135); or d) intact or damaged PULSTAR fuel elements, fuel debris and nonfuel-bearing components of PULSTAR fuel assemblies in the PULSTAR sealed can (Dwg. 315-40-130). The contents of either can type are restricted to a quantity of fissile material and a total volume of material equivalent to 25 PULSTAR fuel elements. The sealed cask contents are restricted to the displaced volume of 25 intact PULSTAR fuel elements. The total cask payload shall not exceed 700 PULSTAR fuel elements. Loading of modules with mixed PULSTAR payload configurations is allowed, but PULSTAR cans, either screened or sealed, are restricted to loading in the base and top modules.

PULSTAR fuel elements are low enriched (< 7 wt%) uranium oxide rods, with zirconium alloy cladding. During reactor operation, 25 PULSTAR fuel elements are arranged in a rectangular 5×5 lattice, surrounded by a zirconium alloy box, and capped by top- and bottom-end fittings to form a PULSTAR fuel assembly. The nonfuel components of a PULSTAR fuel assembly are

primarily aluminum and zirconium alloy and do not contain a significant activation source. A sketch of a PULSTAR fuel assembly is provided in Figure 1.2-13. Key physical, radiation protection and thermal characteristics of the PULSTAR fuel assembly/elements are listed in Table 1.2-9.

The sealed and screened PULSTAR cans are stainless steel containers that: a) minimize the dispersal of gross fuel particles that may escape from damaged fuel element cladding and/or fuel debris; b) facilitate retrieval of the contents from the transportation cask; and c) confine damaged fuel and/or debris within a known volume to facilitate criticality control, maintain dose limits, and control thermal loads within the cask. PULSTAR fuel pellets, pieces, and debris may be placed in an encapsulating rod for handling purposes prior to placement into either a sealed or screened can. The encapsulating rod is not required and has no safety significance. In addition to fuel elements, the cans may contain fuel assembly hardware up to the total content weight limit specified in Table 1.2-9. For operational/retrievability purposes, stainless steel rod inserts may be used to position the PULSTAR fuel elements within the fuel rod insert. Total content weight shall not exceed the total weight limit specified in Table 1.2-9. The fuel rod insert is composed of a 4×4 grid of 0.75-inch OD × 0.065-inch wall stainless steel tubes. The tubes provide structural support for individual intact PULSTAR fuel elements during transport in the NAC-LWT.

Spacers may be used to axially position PULSTAR fuel contents near the top of the module for ease of loading and unloading operations. The spacers are provided for ease of operations and do not provide a safety function.

1.2.3.9 ANSTO Basket and Payload Description

Two basic fuel types are to be transported in the ANSTO baskets within the NAC-LWT cask: spiral fuel assemblies and MOATA plate bundles. Spiral fuel assemblies are composed of cylindrical aluminum inner and outer shells connected by curved metallic fuel plates. Further detail on the spiral fuel assemblies is provided in Section 1.2.3.9.1. MOATA plate bundles are comprised of up to 14 MTR fuel plates. Further detail on the plate bundles is provided in Section 1.2.3.9.2. Spiral fuel assemblies and MOATA plate bundles shall be intact. Note that spiral assemblies may be cropped by removing nonfuel-bearing hardware to fit within the basket tubes. Cropped spiral fuel assemblies are classified as intact fuel.

Up to 42 spiral fuel assemblies or 42 MOATA plate bundles may be loaded. A full cask load contains 6 baskets of up to 7 fuel assemblies or plate bundles per basket. The mixed loading of ANSTO basket modules containing either spiral fuel assemblies or MOATA plate bundles is authorized.

1.2.3.9.1 Spiral Fuel Assemblies

The design basis characteristics of spiral fuel assemblies are presented in Table 1.2-10. The fuel material in spiral fuel assembly plates is a solid, homogeneous mixture of uranium-aluminum

alloy, i.e., a metal alloy fuel. The fuel meat of each plate is clad in aluminum. A set of 10 curved fuel plates is located between an inner and outer cylindrical aluminum shell. Fuel elements are cropped to fit axially within the basket envelope. Fuel material is not cut during the cropping operation. The fuel plates are located in a spiral pattern, maintaining a constant pitch between fuel plate centers. A sketch of the assembly cross-section is provided in Figure 1.2-14.

1.2.3.9.2 MOATA Plate Bundles

The design basis characteristics of MOATA plate bundles are presented in Table 1.2-11. The fuel material in the plate bundle is a solid, homogeneous mixture of uranium-aluminum alloy, i.e., a metal alloy fuel. Each plate is clad in aluminum. A plate bundle is comprised of up to 14 fuel plates. Two thick (0.635 cm) aluminum nonfuel side plates support the fuel plate stack from two sides, making a possible total of 16 plates per bundle. At each axial end, the plates in the stack are connected by a pin. Spacing between plates is maintained by disk spacers placed onto the top and bottom pins between each fuel plate and the aluminum side plates. A sketch of a typical MOATA plate bundle is provided in Figure 1.2-15.

Table 1.2-4 Fuel Characteristics (Continued)

Parameter	Metallic Fuel	Metallic Fuel	Metallic Fuel	MTR HEU	MTR MEU	MTR LEU	TRIGA LEU Element	TRIGA HEU Element	TRIGA Cluster Rod
Maximum Number of Assemblies, Elements or Rods	15 rods (sound)	9 rods (failed)	3 rods (severely failed in filters)	42 [1]	42	42[7]	140	140	560
Maximum Overall Weight, lbs	1805	1805	1805	30 (max) [8]	30 (max) [8]	30 (max) [8]	13.2 (max) [8]	8.82 (nom.) 13.2 (max) [8]	1.5[8]
Maximum Overall Length, in	120.5	120.5	120.5	25.4[2]	26.1[2]	26.1[2]	45	45	31.0
Maximum Active Fuel Length, in	120.0	120.0	120.0	24.8	25.6	25.6	15	15	22.5
Fuel Rod Cladding	Al	Al	Al	Al	Al	Al	Al or SS	Al or SS	Incoloy 800
Maximum Uranium, kg U	54.5	54.5	54.5	0.422 0.511	0.950	2.474 3.368[7]	0.824	0.196	0.0486
Maximum Initial ^{235}U, wt %	Natural	Natural	Natural	94	94[3]	25	20	70	93.3
Maximum Burnup, MWD/MTU	1,600	1,600	1,600	Variable up to 660,000[4]	Variable up to 293,300	Variable up to 139,300	151,100 (80% ^{235}U)	460,000 (80% ^{235}U)	600,000 (80% ^{235}U)
Maximum Unit Decay Heat, kW	0.036	0.036	0.036	Variable[5]	0.030[5]	0.030[5]	0.0075	0.0075	0.001875
Maximum Cask Decay Heat, kW	0.54	0.54	0.54	1.26	1.26	1.26	1.05	1.05	1.05
Minimum Cool Time, yr	1	1	1	Variable[5]	Variable[5]	Variable[5]	Variable[6]	Variable[6]	Variable[6]

1 For NISTR fuel, 42 elements may be cut in half, producing 84 fuel-bearing pieces. Each fuel-bearing piece may contain up to 0.211 kgU.

2 For MTR fuel elements, which are cut to remove nonfuel-bearing hardware prior to transport, a nominal 0.28 inch of nonfuel or spacer hardware will remain above and below the active fuel region to allow for fuel handling operations. The HFBR element, with an element length of 57.24 inches, must be cut prior to shipment. For HEU MTR elements having > 380 g ^{235}U but less than 460 g ^{235}U, a minimum of 2.0 cm (0.8 inch) of nonfuel hardware and/or spacers/plates shall be provided at the ends of the element.

3 Typical MEU enrichment is 45 wt% ^{235}U. Criticality analysis supports up to 94 wt% under the MEU fuel definition.

4 Maximum burnup is 660,000 MWd/MTU for 380 g ^{235}U and 577,500 MWd/MTU for 460 g ^{235}U.

5 Minimum cool times for MTR fuel, down to 90 days, shall be determined using the procedure presented in Section 7.1.5.

6 Minimum cool times for TRIGA fuel elements and fuel cluster rods, down to 90 days, are determined so that the maximum decay heat of any element to be shipped is 7.5 watts and any fuel cluster rod is 1.875 watts.

7 MTR fuel elements having ^{235}U content >470 g (>22 g per plate) are limited to a total of 4 elements in a 7-element basket. Basket openings 1, 2 and 3 shall be blocked by cell block spacers to ensure that MTR elements are not loaded in these openings. Therefore, depending on the number of such 4-element baskets, the maximum number of elements per cask will be reduced accordingly.

8 Maximum weight of fuel element(s), spacer(s) and fuel can, as applicable, per basket module cell shall be 80 pounds.

Table 1.2-4 Fuel Characteristics (Continued)

Parameter	DIDO HEU	DIDO MEU	DIDO LEU
Number of Fuel Cylinders per Assembly	4	4	4
Maximum Overall Weight (lb)[4]	15	15	15
Minimum Plate Thickness, in	0.051	0.051	0.051
Minimum Clad Thickness (Al), in	0.00984	0.00984	0.00984
Maximum ^{235}U per Element, g	190	190	190
Maximum Initial ^{235}U, wt %	94	94	94
Minimum Initial ^{235}U, wt %	90	40	19
Maximum Uranium, kg U	0.2111	0.4750	1.0000
Minimum Active Fuel Height, in	23.13	23.13	23.13
Minimum Element Height[1], in	24.21	24.21	24.21
Maximum Burnup, MWD/MTU	577,460	256,650	121,910
Maximum Unit Decay Heat[2], kW	0.025	0.025	0.025
Maximum Cask Decay Heat, kW	1.05	1.05	1.05
Minimum Cool Time[3], yr	Variable	Variable	Variable

1 Element height provides for spacing of fissile material. An optional spacer may be used to maintain spacing if the element is cut shorter than 24.21 inches.
2 Maximum unit decay heat of 0.025 kW allowed only in conjunction with spacers for top basket (see Section 7.1.4), otherwise the limit is 0.018 kW.
3 Minimum cool times for DIDO fuel assemblies, down to 180 days, shall be determined using the procedure presented in Section 7.1.4.
4 Maximum weight of fuel element(s), spacer(s) and fuel can, as applicable, per basket module cell shall be 80 pounds.

Figure Withheld Under 10 CFR 2.390

NAC INTERNATIONAL

LEGAL WEIGHT TRUCK
TRANSPORT CASK ASSY
42 MTR ELEMENT
SAFETY ANALYSIS REPORT

PROJECT	DRAWING	REV
315-40	048	3

11:41AM

Figure Withheld Under 10 CFR 2.390

NAC INTERNATIONAL

LEGAL WEIGHT TRUCK
TRANSPORT CASK ASSY
28 MTR ELEMENT
SAFETY ANALYSIS REPORT

PROJECT 315-40		DRAWING 052	REV 3
SCALE	WEIGHT	SH 1 OF 1	11:40AM 10-11-2007

Figure Withheld Under 10 CFR 2.390

NAC INTERNATIONAL

LEGAL WEIGHT TRUCK
TRANSPORT CASK ASSY
TRIGA FUEL

PROJECT 315-40		DRAWING 079	REV 3
SCALE 1/8	WEIGHT	SH 1 OF 1	3:17PM 10-11-2007

Figure Withheld Under 10 CFR 2.390

Figure Withheld Under 10 CFR 2.390

NAC INTERNATIONAL

LEGAL WEIGHT TRUCK
TRANSPORT CASK ASSY
35 MTR ELEMENT

PROJECT 315-40		DRAWING 094	REV 4
SCALE 1/8	WEIGHT	SH 1 OF 1	11:44AM 10-11-2007

Figure Withheld Under 10 CFR 2.390

NAC INTERNATIONAL

AXIAL FUEL AND CELL BLOCK SPACERS, MTR AND TRIGA FUEL BASKETS, NAC-LWT CASK SAR

PROJECT 315-40		DRAWING 085	REV 0
SCALE 1/1	WEIGHT NOTED	SH 1 OF 1	8:29AM 10-11-2007

Chapter 2

2.6.12 Fuel Basket Analysis

2.6.12.1 Discussion

To assure that the cask contents are retained in a subcritical and safe configuration, a fuel basket supports the contents both laterally and longitudinally. During normal transport, the cask may sustain a 1-foot free fall to either the side, corner or end drop orientations. Fuel basket designs examined under normal operations conditions are: the PWR basket (Section 2.6.12.2); the BWR basket (Section 2.6.12.4); the metallic fuel basket (Section 2.6.12.5); the MTR basket (Section 2.6.12.6); the TRIGA fuel basket (Section 2.6.12.7); the DIDO fuel basket (Section 2.6.12.8); the GA IFM basket (Section 2.6.12.9); and the TPBAR basket and spacer (Section 2.6.12.10). The analyses demonstrate that each of the basket designs is supported by the inner shell in bearing during a side drop, and that none of the basket designs will buckle during an end drop. The effects of a corner drop are bounded by the side and end drops.

2.6.12.2 PWR Basket Construction

The cylindrical basket body is fabricated from 6061-T6 aluminum alloy extrusions. An open, square, central core extends the length of the basket and provides lateral support for the cask contents. A 13.25-inch outside diameter, 0.125-inch thick aluminum tube that is 4.38 inches long, is bolted to the top of the basket body. This top tube protects the cask inner shell from damage during fuel loading operations and provides lifting points, which are used when the basket is removed from the cask. An aluminum spacer plate assembly is bolted to the bottom of the basket body. The spacer plate assembly supports the fuel basket and contents longitudinally, providing their movement within the cask. Additional spacer fixtures are either bolted to the cask lid or to the base of the fuel basket, if the cask contents do not fill the basket. The maximum spacer loads occur for the 30-foot drop hypothetical accident load conditions. The spacer analysis is presented in Section 2.7.7.8. A groove on the outside of the basket body is provided for the cask drain tube. The drain tube is connected to a fitting on the cask body, and is used to drain or fill the cask during cask loading or unloading operations.

For the shipment of up to 25 PWR rods, a canister will be utilized to position the PWR rod contents within the PWR or BWR basket. The canister for the PWR rods will be fabricated from Type 304 stainless steel (minimum thickness 0.12 inch) and will be designed to allow positive handling of the canister during loading and unloading operations. The size, shape, closure design and capacity of

the canister will vary depending on the requirements of the shipping and/or receiving facilities. Spacers fabricated from stainless steel will be utilized, as required, to position the PWR rod canister laterally and longitudinally within the PWR or BWR basket. The total weight of the PWR rods, canister and spacer(s) will be less than the maximum BWR fuel assembly payload weight of 1,500 pounds. Therefore, the up to 25 PWR rods content condition is bounded by the current PWR and BWR basket analyses.

2.6.12.3 PWR Basket Analysis

The minimum ambient temperature during normal transport, -40°F, combined with the maximum decay heat load produces an average inner wall temperature of 151°F. The 6061-T6 aluminum alloy expands approximately 1.5 times more per degree Fahrenheit than stainless steel. Assuming that both the cask and basket respond linearly, the maximum as-designed gap between the basket and the cavity, when the basket is centered in the cavity, is 0.094 inches. Since aluminum expands faster than stainless steel, any increase in temperature will serve to decrease the basket-cavity gap. Since the gap is small, it is assumed that there is no relative motion between the basket and cask, and that the basket is in contact bearing on the inner shell during a side drop. The basket bearing loads are transmitted to the inner shell and cask structure.

2.6.12.3.1 Bearing Stress Calculation

The bearing stress is calculated using Case 6 (Roark, page 320), which models the cylindrical basket in a circular groove. The maximum compressive stress is calculated using:

$$S_{c_{max}} = 0.798 \left[\frac{\dfrac{P(D_1 - D_2)}{D_1 D_2}}{\dfrac{1 - \nu_1^2}{E_1} + \dfrac{1 - \nu_2^2}{E_2}} \right]^{0.5}$$

$$= 1570 \text{ psi}$$

where the material properties at 250°F are:

$E_{Al250°F} = 9 \times 4\ 10^6$ psi

$I_{basket\ body} = 46\ in^4$

L = 145.25 in, fuel tube length

$MS = \underline{P_{cr}} / P_F - 1 = \underline{+LARGE}$

$E_{Al250°F} = 9.4 \times 10^6$ psi

$I_{spacer\ tube} = 66\ in^4$

L = 29.5 in, spacer tube length

$MS = \underline{P_{cr}} / P_c - 1 = \underline{+LARGE}$

2.6.12.6 MTR Fuel Basket Construction

The MTR modular basket assembly has four configurations. One configuration is for 28 uncut (intact) MTR fuel assemblies (28 MTR – 4 unit basket), the second is for 35 partially cut MTR elements that have had portions of the upper and lower end fittings removed (35 MTR – 5 unit basket), the third configuration is for 42 MTR fuel assemblies (42 MTR – 6 unit basket) with the upper and lower end fittings removed. The fourth configuration is for up to 700 PULSTAR fuel elements loaded in the 28 MTR basket. The PULSTAR fuel may be intact fuel assemblies, intact fuel elements (rods) loaded in a fuel rod insert or in fuel cans, or damaged fuel elements, fuel debris, and nonfuel components of fuel assemblies loaded in fuel cans. Each MTR basket configuration consists of one base module, one top module, and two, three, or four intermediate modules for the 28, 35, and 42 element configurations, respectively. Each MTR basket module is designed to hold up to seven MTR or PULSTAR fuel assemblies. The modules are not interchangeable between basket configurations. The structural analysis is not affected by the specific fuel element design or enrichment as long as the fuel characteristics are in compliance with the fuel characteristics listed in Table 1.2-4.

Axial fuel and plate spacers may be used to axially position the MTR fuel assemblies in the basket modules. Cell block spacers are used to prevent the loading of fuel assemblies in basket module positions 1, 2 and 3 when LEU MTR fuel elements having >470 g ^{235}U per element (>22 g ^{235}U per plate) are loaded. The presence and/or use of spacers, fuel plate canisters or fuel cans does not affect the structural integrity of the MTR fuel baskets as the total weight of fuel element, spacer and fuel plate canister or fuel can is limited to the evaluated load of 80 pounds/cell. The axial fuel and cell block spacers perform no safety function and are considered dunnage. Plate spacers are used, if required, to ensure that the criticality evaluation required minimum nonfuel hardware is provided.

Each module, fabricated from Type 304 stainless steel, is a weldment made up of two 1/2-inch thick, 13.265-inch diameter, circular plates at each end of the longitudinal divider plates creating seven MTR fuel assembly cavities. The outside wall of the four symmetric outermost fuel compartments is fabricated from 11-gage Type 304 stainless steel sheet. The 1/2-inch thick plate at the top end of the MTR fuel basket module is welded to the exterior surfaces of the fuel tube weldment with a 1/8-inch continuous weld on the under side of the top plate and with a continuous fillet seal weld on the top side. The 1/2-inch thick baseplate is continuously welded to the 1/4-inch thick divider plates and the 5/16-inch thick web plates. The 11-gage sheet metal and the 5/16-inch intermediate webs are discontinued at 1/4 inch from the surface of the baseplate to provide for compartment drainage. The 5/16-inch plate material may be machined to a minimum thickness of 0.28 inch. In addition to the drainage path at the base of each assembly cavity, a 1-inch diameter hole is located at the center of each of the compartments in the module. Each MTR basket base module sits on a 1.5-inch long, 10-inch schedule 80S pipe welded to the 1/2-inch thick baseplate. The 10-inch schedule 80S pipe carries the total weight of the MTR basket assembly and bears directly on the bottom forging of the cask.

The MTR fuel basket base module and intermediate modules have guide pins fixed to the surface of the top support plate. The guide pins fit into holes in the base plate of the top and intermediate modules and provide controlled alignment of the basket assembly. A groove slot on the outside of each basket unit support plate is provided for the clearance of cask drain tube and for circumferential alignment of the MTR basket assembly.

The MTR Plate Canister (canister) is an all-aluminum rectangular canister that is suitable for transport in the NAC-LWT MTR 42 element basket. The canister may be transported in the 28 or 35 element basket if appropriate dunnage is used. The canister is fabricated from ASTM B209 or ASTM B221 6061 aluminum. The canister body comprises two thick walls and two thin walls that are welded together into a rectangular tube to contain up to 23 MTR fuel plates. Each end of the canister body is closed by identical aluminum lids milled from a solid piece to incorporate a lifting bail. The lids are fastened securely to the thick wall plates using aluminum socket head cap screws that are captive in the lid to facilitate closing the canister.

2.6.12.6.1 MTR Fuel Basket Analysis

The MTR basket assembly and the inner shell are both fabricated from Type 304 stainless steel material. The nominal radial gap between the MTR basket assembly and the cask inner shell is 0.055 inch. The nominal radial gap between the basket and the inner shell is 0.0531 inch at the design basis fuel normal operation steady-state temperature. As defined for other NAC-LWT fuel specific basket designs, since the gap between the basket and cask inner shell wall is small, it is assumed that there is no relative motion between the basket and the cask, and that the basket is in

contact bearing on the inner shell during a side drop. The basket bearing loads are transmitted to the inner shell and cask structure.

The analysis of the MTR plate canister is presented in Section 2.6.12.6.6.

2.6.12.6.2 MTR Fuel Basket Normal Conditions 1-foot Side Drop

This section evaluates the MTR fuel basket for the normal conditions of transport 1-foot side drop.

2.6.12.6.2.1 Bearing Stress Calculation—Inner Shell (Cask 1-foot Side Drop)

The bearing stress is calculated using Roark's, Table 33, Case 2 (Roark's, 6th Edition), which models the cylindrical basket in a circular groove. The 28 MTR fuel assembly base module is the heaviest module when loaded with 25 PULSTAR fuel elements. The maximum compressive stress, for two elastic bodies with similar elastic modulus, is:

$$\sigma_c = 0.798\sqrt{\frac{\frac{gP(D_1 - D_2)}{D_1 D_2}}{\frac{2(1-\nu^2)}{E}}} = 16{,}679 \text{ psi}$$

where:

g	=	1-foot side drop acceleration = 24.3
E	=	Elastic modulus = 28.3×10^6 psi (conservatively use E @ 70°F)
ν	=	Poisson's ratio for steel material = 0.275
D_1	=	Cask cavity diameter = 13.405 in
D_2	=	Basket diameter = 13.265 in
t	=	Thickness of stiffener at mid section of base module (less chamfers)
	=	$0.5 - 2 \times 0.13 = 0.24$ in
W	=	Maximum weight of MTR basket with contents (PULSTAR fuel elements)
	=	3,222 lb
W_r	=	Load supported by 28 assembly basket base module middle ring
		= W/9 = 358 lb
P	=	W_r/t = 358 lb/0.24 in = 1,491 lb/in

The allowable compressive stress, S_y, of Type 304 stainless steel at a conservative maximum operating temperature envelope of 600°F is 18,200 psi. The margin of safety is calculated as:

$$MS = \frac{S_y}{\sigma_c} - 1 = +0.09$$

2.6.12.6.2.2 Fuel Tube Stresses (Cask 1-foot Side Drop)

The maximum stress in the fuel tubes occurs in the 0.12-inch thick, 11-gage sheet metal tubes which support the entire length of the MTR fuel elements or PULSTAR fuel elements. There are two cases to consider. In the first case, the weight of the fuel assembly is transmitted to the tube through the two aluminum plates at the sides of the fuel assembly. As shown in Figure 2.6.12.6-1, this load path creates a uniform line load along the length of the tube located about 0.315 inch from the corners. The tube is analyzed as a simple beam, 1 inch wide, 0.12 inch thick, and 3.44 inches long with a concentrated load at 0.315 inch from the ends. The maximum bending moment, M_I, is:

$$M_I = \frac{(8Pa + WL^2) \times g}{8} = 14.0 \text{ in-lb/in}$$

where:

W	=	Unit tube body weight = 0.288 × t = 0.0346 lb/in^2
L	=	Length = 3.44 in
P	=	Bounding fuel load = $P_f / (2 \times L_f)$ = 1.67 lb/in
P_f	=	Fuel weight = 80.0 lb
L_f	=	Shortest length over which fuel load is applied = 24 in
a	=	Distance from applied load, P to support = 0.315 in
g	=	1-foot side drop acceleration = 24.3

In the second case, the weight of the fuel assembly is transmitted to the tube as a uniform load. The load path is shown in Figure 2.6.12.6-1. The maximum bending moment for this case, M_{II}, is:

$$M_{II} = \frac{(2PL^2 + WL^3) \times g}{8L} = 36.1 \text{ in-lb/in}$$

The maximum bending stress, σ, is:

$$\sigma = \frac{6M_{II}}{t^2} = 15{,}042 \text{ psi}$$

where:

t	=	Fuel tube thickness = 0.12 in

The stress allowable, $1.5S_m$, is 24,600 psi for Type 304 stainless steel at a conservative temperature of 600°F. The margin of safety is:

$$MS = \frac{24{,}600}{15{,}042} - 1 = +0.64$$

The 11-gage sheet metal tube is continuously welded to the adjacent divider plates with a 1/8-inch fillet weld. This weld resists shear developed in the simple beam analyzed above.

$$V = \frac{(2P + WL) \times g}{L} = 24.4 \text{ lb/in}$$

The shear stress, τ, is:

$$\tau = \frac{V}{t} = 203 \text{ psi}$$

The "throat" thickness of the weld is 0.088 inches. The ratio of the plate thickness (0.12 in) to the weld "throat" thickness (0.088 in) is 1.36. The maximum stress of 203 psi calculated above is adjusted by a factor of 1.36 to obtain the maximum stress in the weld for the 1-foot side drop (24.3g). Maximum stress in the weld, S_w, is:

$$S_w = 1.36 \times \tau = 276 \text{ psi}$$

The ASME Code, Subsection NG-3352 recommends that the allowable stress be determined for a fillet weld with PT or MT surface examination by implementing a quality factor, n, of 0.4. The stress allowable, S_y, of the base metal, Type 304 stainless steel, is 18,200 psi at a conservative operating temperature envelope of 600°F. The margin of safety for the fillet weld is:

$$MS = \frac{S_y \times n}{S_w} - 1 = +\text{Large}$$

2.6.12.6.3 MTR Fuel Basket Normal Conditions 1-foot End Drop

This section evaluates the MTR fuel basket for the normal conditions of transport 1-foot end drop.

2.6.12.6.3.1 Bearing Stress Calculation—Bottom Forging (Cask 1-foot End Drop)

When in the vertical position a 0.5-inch thick, 10-inch nominal diameter schedule 80S pipe supports the MTR basket assembly. The 1.5-inch long pipe is welded to the baseplate of the base module. The compressive stress is:

$$\sigma_c = \frac{g \times W}{A} = 3{,}162 \text{ psi}$$

where:

W = Maximum weight of MTR basket with contents (PULSTAR fuel elements) = 3,222 lb
A = Cross-sectional area of base pipe support = 16.1 in^2
g = 1-foot end drop acceleration = 15.8

The allowable stress, S_y, of Type 304 stainless steel at a conservative maximum operating temperature of 600°F is 18,200 psi. The margin of safety is:

$$MS = \frac{S_y}{\sigma_c} - 1 = +4.76$$

2.6.12.6.3.2 Compressive Stress Calculation—Fuel Tubes (Cask 1-foot End Drop)

The MTR basket assembly and the inner cavity length are designed to ensure that there is minimal longitudinal movement of the basket relative to the cask. The base module of the MTR basket assembly supports itself and the weight of the other basket modules, including fuel content during a 1-foot end drop. The normal operation load compressive stress developed in the basket tube wall is:

$$\sigma_c = \frac{g \times W}{A} = 6{,}208 \text{ psi}$$

where:

W = Maximum weight of MTR basket with contents (PULSTAR fuel elements)
= 3,222 lb
g = 1-foot end drop acceleration = 15.8
A = Total compartment cross-sectional area at baseplate (Figure 2.6.12.6-2)
= 8.20 in^2

The allowable compressive stress, S_m, is 16,400 psi conservatively evaluated for Type 304 stainless steel at a conservative maximum operating temperature of 600°F. The margin of safety is:

$$MS = \frac{S_m}{\sigma_c} - 1 = +1.64$$

The Euler elastic buckling load formulation is used to determine the critical buckling load of the MTR basket base module. The base module is treated as simply supported, which results in an effective length that is twice the actual length, thus reducing the critical buckling load by a factor of 4.0. The basket base module buckling load is:

$$P_{cr} = \frac{\pi^2 EI_i}{(L_e)^2} = 1.55 \times 10^6 \text{ lb}$$

The margin of safety is:

2.7.7 Fuel Basket Accident Analysis

2.7.7.1 Discussion

Aluminum and stainless steel fuel baskets support NAC-LWT cask contents and retain them in a subcritical and safe geometry. Nine fuel basket designs are analyzed for accident condition loads: the PWR basket (Section 2.7.7.2); the BWR basket (Section 2.7.7.4); the metallic fuel basket (Section 2.7.7.5); the MTR basket (Section 2.7.7.6); the TRIGA fuel basket (Section 2.7.7.9); the DIDO basket (Section 2.7.7.10); the GA IFM basket (Section 2.7.7.11); the TPBAR basket (Section 2.7.7.12); and the failed metallic fuel basket (Section 2.10.13). Side and end impact orientations are the two limiting accident cases. In the side drop orientation, the basket is supported in bearing on the inner shell, and all structural loads are transmitted to the cask structure. Analysis shows that the structural load occurring during the end drop will not cause the basket assemblies or the analyzed spacers to buckle.

2.7.7.2 PWR Basket Construction

The PWR basket is cylindrical in shape, and constructed from 6061-T6 aluminum. A central hollow, square cavity supports the cask contents during transport. An aluminum spacer assembly is welded to the bottom of the PWR basket. It supports the fuel basket and contents longitudinally and limits their movement within the cask cavity. Additional spacers may be bolted to the cask lid as required by the length of the contents. A complete description of the basket and its construction is provided in Section 2.6.12. For the shipment of up to 25 individual PWR rods, a spacer canister will be utilized to position the PWR rods within the PWR or BWR basket. The PWR rods and canister are bounded by the PWR basket analyses of Section 2.7.7.3.

2.7.7.3 PWR Basket Analysis

The NAC-LWT cask maximum inner shell diameter is 13.405 inches at 70°F. The basket body outside diameter is 13.25 inches at 70°F. Except when the cask is empty, the cask cavity temperature is always higher than 70°F. The 6061-T6 aluminum alloy expands approximately 1.5 times more per degree Fahrenheit than does stainless steel. During the -40°F ambient, high heat load, normal transport condition, the average inner cavity wall temperature is 151°F. Accounting for the thermal response of the basket, the diameter of the basket body is 13.26 inches. The maximum as-designed gap between the basket and the cavity, when the basket is centered in the cavity, is 0.094 inch (both inner basket are considered to be at 70°F). The basket is assumed to be in bearing contact with the inner shell during a side drop accident. All loads from the contents are transmitted through the basket to the inner shell and the cask structure.

2.7.7.3.1 Bearing Stress Calculation - Side Drop

The bearing stress is calculated using Case 6 (Roark, page 320), which models the cylindrical basket in a circular groove. The maximum compressive stress is calculated using:

$$S_{c_{max}} = 0.798 \left[\frac{\dfrac{P(D_1 - D_2)}{D_1 D_2}}{\dfrac{1 - \nu_1^2}{E_1} + \dfrac{1 - \nu_2^2}{E_2}} \right]^{0.5}$$

$$= 2242 \text{ psi}$$

where the material properties at 250°F are:

Stainless Steel

$D_1 = 13.405$

$E_1 = 27.3 \times 10^6$ psi

$\nu_1 = 0.275$

Aluminum (6061-T6)

$D_2 = 13.25$ in

$E_2 = 9.4 \times 10^6$ psi

$\nu_2 = 0.334$

contents + basket weight = 4000 lb

P_{1g} = 4000 lb/178 in = 22.5 lb/in

$P_{49.7g}$ = (22.5 lb/in)(49.7 g) = 1118 lb/in

The side drop g load, 49.7 g, is determined in Section 2.6.7.4.

The allowable bearing stress is the lesser value of the yield strength of aluminum or of stainless steel, which is 23,800 psi; the yield strength (S_y) of Type 304 stainless steel at 250°F. The margin of safety is calculated as:

$$M.S. = \frac{S_y}{S_{c_{max}}} - 1 = \underline{+Large}$$

module, and either two, three or four intermediate modules for the 28-, 35- and 42-element configurations, respectively. Each 28 MTR basket module is capable of holding up to seven MTR type fuel assemblies or up to seven PULSTAR fuel assemblies.

The hypothetical accident analyses for the MTR fuel baskets are not affected by the specific fuel element design or enrichment as long as the fuel characteristics are in compliance with the fuel characteristics listed in Table 1.2-4.

Each module, fabricated from Type 304 stainless steel, is a weldment made up of two 1/2-inch thick, 13.625-inch diameter, circular plates at each end of the longitudinal divider plates creating seven MTR fuel assembly compartments. The outside wall of the four symmetric outermost fuel tubes is fabricated from 11- gage Type 304 stainless steel sheet. The 1/2-inch thick plate at the top end of the MTR basket module is welded to all webs and divider plates. The 1/2-inch thick baseplate is continuously welded to the 1/4-inch thick divider plates and the 5/16-inch thick web plates. The 11-gage sheet metal and the 5/16-inch intermediate webs are discontinued at 1/4 inch from the surface of the baseplate to provide full tube drainage. The 5/16-inch plate material may be machined to a minimum thickness of 0.28 inch. In addition, a 1-inch diameter hole is located at the center of each of the compartments in each basket module. The MTR basket base module sits on a 1.5-inch long, 10-inch schedule 80S pipe welded to the 1/2-inch thick baseplate. The 10-inch schedule 80S pipe carries the total weight of the MTR basket assembly and bears directly on the bottom forging of the cask.

The MTR fuel basket base module and intermediate modules have guide pins fixed to the surface of the top support plate. The guide pins fit into holes in the base plate of the top and intermediate modules and provide controlled alignment of the basket assembly. A groove slot on the outside of each basket unit support plate is provided for the cask drain tube clearance and to provide for the basket assembly circumferential alignment.

2.7.7.6.1 MTR Fuel Basket Analysis

The MTR basket assembly and the inner shell are both fabricated from Type 304 stainless steel material. The nominal radial gap between the MTR basket assembly and the cask inner shell is 0.055 inch. The nominal radial gap between the basket and the inner shell is 0.0531 inch at the design base fuel normal operation steady-state temperature. As defined for other NAC-LWT fuel-specific basket designs, since the gap between the basket and cask inner shell wall is small, it is assumed that there is no relative motion between the basket and the cask, and that the basket is in contact bearing on the inner shell during a side drop. The basket bearing loads are transmitted to the inner shell and cask structure.

2.7.7.6.2 Bearing Stress Calculation - Bottom Forging

The MTR basket assembly, when in the vertical position, is supported by a, 0.5-inch thick, 10-inch nominal diameter schedule 80S pipe. The 1.5-inch long pipe is welded to the baseplate of the base unit. The compressive stress is calculated as:

$$S_c = gW/A = 8{,}430 \text{ psi}$$

where:

A = Cross-sectional area of base pipe support = 16.1 in^2

W = Weight of MTR basket assembly and contents = 2,262 lbs

g = Dynamic load factor (31-foot end drop) = 60

The allowable stress, S_y, of Type 304 stainless steel at a conservative maximum operating temperature envelope of 600°F is 18,200 psi. The Margin of Safety is calculated as follows:

$$\text{Margin of Safety} = S_y/S_c - 1 = +\underline{1.16}$$

2.7.7.6.3 Compressive Stress Calculation - Fuel Tubes (Cask End Drop)

The MTR basket assembly and the inner cavity length are designed to ensure that there is limited longitudinal movement of the basket assembly relative to the cask cavity. The base module of the MTR basket assembly supports itself and the weight of other basket units, including fuel assemblies, during an end drop. The accident condition load compressive stress developed in the basket tube wall is:

$$\sigma_c = \frac{g \times W}{A} = 23{,}576 \text{ psi}$$

where:

W = Maximum weight of MTR basket with contents (PULSTAR) = 3,222 lb

g = 31-foot end drop acceleration = 60g

A = Total compartment cross-sectional area at baseplate (Figure 2.6.12.6-2) = 8.20 in^2

The allowable compressive stress, $0.7S_u$, is 44,450 psi conservatively evaluated for Type 304 stainless steel at 600°F. The margin of safety is:

$$MS = \frac{0.7S_u}{\sigma_c} - 1 = +0.89$$

Chapter 3

3.5.3 Package Temperatures

The temperatures of the cask body resulting from the fire are determined using ANSYS. The heat load used in the transient thermal analysis corresponds to the PWR fuel, since its heat load envelopes all other fuel types that can be transported in the NAC-LWT cask.

The maximum temperatures of the basket and fuel for the different fuel types are determined using the results of the fire transient analysis of the cask body and the maximum temperature differences between the basket and fuel and the inner shell of the cask body as computed in the steady state thermal evaluations.

3.5.3.1 Evaluation for PWR Fuel Contents

The maximum temperatures of the cask body and principal components are evaluated using the ANSYS model described in Section 3.5.1.1. A radial temperature profile is obtained during the postulated 30-minute fire and for a cooldown period of 50 hours. The maximum cask component temperatures for the hypothetical accident are presented in Table 3.5-1.

Maximum time dependent temperatures of different cask components, before, during and after the fire, are shown in Figures 3.5-4 and 3.5-5. The temperatures of the components show a sharp increase during the fire and a sharp decrease that begins right after the fire. After the 50 hour cooling period, the temperatures of the components do not return to the normal conditions of transport values. This is attributed to the loss of the liquid neutron shield during the accident, which results in the loss of the (liquid) convection heat transfer across the tank.

As noted above, the fuel and the fuel basket were not directly modeled in the ANSYS analysis. To determine the maximum temperature of the components inside the basket, the following method is applied:

$$T_{max} = Tis_{max} + \Delta T_{comp}$$

where:

Tis_{max} is the maximum temperature of the inner shell, obtained in the ANSYS transient thermal analysis.

ΔT_{comp} is the difference in maximum temperatures from Table 3.4-2 between the inner shell and the fuel basket outer wall or the fuel rod cladding during normal transport.

The maximum temperatures of fuel cladding and basket wall are:

Component	ΔT_{comp} (°F) [1]	Tis_{max} (°F) [2]	T_{max} (°F)
Fuel basket outer wall	2 (276-274)	505	507
Fuel cladding	198 (472-274)	505	703

[1] Temperatures from Table 3.4-2.
[2] Temperatures obtained in the ANSYS evaluation.

As a result, the maximum average cavity gas temperature can be taken as the average of the maximum basket wall and maximum fuel cladding temperatures. This produces an average cavity gas temperature of 605°F.

As shown in Table 3.5-1, all of the cask component temperatures are within the allowable temperature limit during the fire accident event.

3.5.3.2 Evaluation of MTR Fuel Contents

The temperatures in the MTR fuel basket and MTR fuel plates produced during the fire accident were determined using the two ANSYS finite element models of the NAC-LWT cask for MTR fuel element discussed in Section 3.4.1.3.2. The gas in the NAC-LWT cask cavity is considered to be air. Other conditions applied to the model are the same as those described in Sections 3.5.1 and 3.5.2 for the axisymmetric fire transient model with respect to the liquid neutron shield and outer surface boundary conditions. The accident thermal models for MTR fuel are shown in Figures 3.5-6 and 3.5-7, for the design basis decay heat loading and the variable decay heat loading, respectively. The type, form, design or enrichment of the MTR fuel assemblies has no effect as long as the decay heat load and other fuel characteristics are in compliance with the requirements of Table 1.2-4. The presence and/or use of axial fuel spacers and spacer plates to position the fuel assemblies for ease of handling have no effect on the thermal analyses of the MTR basket assembly.

The transient calculation is performed to determine the maximum temperatures in the MTR fuel elements only for the variable decay heat loading because this is the worst-case condition. The cask model is used to determine the temperature history of the cask components, including the basket. The fuel element model is used to determine the temperature rise between the basket and the hottest point in the fuel element. The capacitance of the fuel element is negligible compared to the very large capacitance of the cask assembly. Therefore, a constant ΔT between basket and fuel is used. The temperature history for the MTR fuel variable heat load fire accident analysis is shown Figure 3.5-8. The temperature profile within the cask model at the time of the maximum fuel temperature is shown in Figure 3.5-9. The bounding case is an element with 10 fuel plates, a decay heat of 120W and with worst-case dimensions. The maximum temperatures of the components are presented in Table 3.5-2.

Chapter 4

4.5.5 Containment Analysis of MTR Fuel Elements

To support the shipment of MTR fuel elements that have localized aluminum cladding corrosion, or mechanical damage, DOE has prepared a set of reports titled "Bases for Containment Analysis for Transportation of Aluminum-Based Spent Nuclear Fuel" (WSRC-TR-98-00317) and "Impact of Degraded RA-3 Fuel Condition on Transportation to and Storage in SRS Basins" (WSRC-TR-2000-00152). Report WSRC-TR-98-00317 has been presented by DOE to the NRC, and subsequently requested by DOE to be used to justify the radionuclide activity concentrations for MTR fuel in the NAC-LWT cask. Report WSRC-TR-2000-00152 demonstrates that mechanical damage may be treated similarly to cladding corrosion, and that the controlling variable in the calculation is the surface area of fuel meat exposed. The information that follows relies heavily on the methodology and terminology presented in the WSRC reports.

MTR fuel elements are divided into three broad categories based on their initial enrichment. These categories are highly enriched (HEU), medium enriched (MEU), and low enriched (LEU). Each category was individually evaluated in Chapter 5 to determine minimum cool time as a function of burnup. Containment evaluations were performed for each of the fuel types at 30 watts at or above the maximum permissible burnup. The 30-watt pattern reflects full basket loads (seven elements per basket) and bounds the higher heat load HEU patterns. While higher fuel mass LEU elements (640 grams ^{235}U) produce larger radionuclide inventories on a per element basis than those employed in the following calculations, the high LEU mass basket is limited to four elements (refer to Chapter 6) and is, therefore, bounded by the evaluations shown. MTR fuel element content condition allowable leakage rates are bounded by the allowable release rates calculated for 25 high burnup BWR fuel rods (see Sections 4.2 and 4.5.6).

The activities and A_2 values together with the maximum allowable normal condition leak rate for each of the three fuel types are:

	MTR LEU	MTR MEU	MTR HEU
Fission Gas Ci	8.84E+01	9.43E+01	8.64E+01
Fission Gas A_2	2.78E+02	2.78E+02	2.78E+02
Volatiles Ci	2.79E+03	2.79E+03	2.76E+03
Volatiles A_2	1.05E+01	1.09E+01	1.21E+01
Fines Ci	5.36E+03	5.05E+03	3.41E+03
Fines A_2	9.56E-01	9.72E-01	4.56E-01
Allowable Leakage Rate (cm^3/sec)	1.83E-05	1.94E-05	1.42E-05

The detailed evaluation of the bounding HEU MTR fuel element is shown in the following sections.

4.5.5.1 Definition of Variables

The following variables are utilized to determine the releasable quantity of radionuclides and the corresponding allowable leakage rate from the cask. These variables are defined either within the WSRC reports or are specific to the MTR fuel loading proposed for the NAC-LWT cask.

Fraction of Breached Fuel	f_b	0.10 (normal)	1.0 (accident)
Fission Gas Release Fraction	f_G	0.30 (normal)	1.0 (accident)
Volatile Release Fraction	f_V	1×10^{-6} (normal & accident)	
Fuel Meat Spallation Fraction	T_F	0.15 (normal)	1.0 (accident)
Crud Spallation Fraction	f_C	0.15 (normal)	1.0 (accident)
Depth of Corrosion Attack	P	5×10^{-4} cm	
Cask Free Volume	V_c	2.293×10^5 cm^3 (Table 4.2-3)[1]	
Number of MTR Assemblies	Assy	42 (maximum)	
Gas A_2 Value	$A_{2\ gas}$	277.74 Ci (Table 4.5-10)	
Volatile A_2 Value	$A_{2\ vol}$	12.06 Ci (Table 4.5-11)	
Fines A_2 Value	$A_{2\ fines}$	0.46 Ci (Table 4.5-12)	
Crud A_2 Value	$A_{2\ crud}$	0.27 Ci (WSRC Report, Section 5.4)	
Corrosion Fraction	0.5	(maximum design basis)	

[1] Free volume associated with 42 element basket with intact MTR fuel elements. Cask free volume would not be significantly reduced for the configuration of loose plates in an MTR plate canister, as the additional material of the can is offset by the lack of MTR fuel assembly hardware materials.

Chapter 5

LIST OF TABLES

Table 5.1-1 Type, Form, Quantity and Potential Sources of Design Basis Fuel 5.1-7
Table 5.1-2 Design Basis Fuel for Shielding Evaluation 5.1-11
Table 5.1-3 Nuclear and Thermal Source Parameters 5.1-14
Table 5.1-4 Combined Dose Rates for Normal Operations Conditions 5.1-15
Table 5.1-5 Hypothetical Accident – Loss of Shielding Materials 5.1-16
Table 5.1-6 Hypothetical Accident – Lead Slump 5.1-17
Table 5.2-1 LOR-2 Input Data 5.2-3
Table 5.2-2 Photon Spectrum for Design Basis Fuel 5.2-5
Table 5.2-3 Fission Product Gas Inventory 5.2-6
Table 5.2-4 Design Basis Fuel Neutron Spectrum 5.2-7
Table 5.3-1 Source Material Compositions 5.3-10
Table 5.3-2 Shield Material Densities and Compositions 5.3-11
Table 5.3-3 Design Basis MTR Fuel Element Characteristics 5.3-19
Table 5.3-4 MTR Fuel Element Gamma SourceTerms by Thermal Output – 380 grams ^{235}U 5.3-19
Table 5.3-5 MTR Fuel Element Neutron Source Terms by Thermal Output – 380 grams ^{235}U 5.3-20
Table 5.3-6 MTR Fuel Element Gamma Source Terms by Thermal Output – 460 grams ^{235}U 5.3-21
Table 5.3-7a MTR Fuel Element Neutron Source Terms by Thermal Output – 460 grams ^{235}U 5.3-22
Table 5.3-7b LEU MTR Hardware Source to Fuel Source Comparison 5.3-22a
Table 5.3-7c HEU MTR Hardware Source to Fuel Source Comparison 5.3-22b
Table 5.3-8 Material Densities for MTR Fuel Shielding Analysis 5.3-23
Table 5.3-9 LWT Cask Surface Total Dose Rates (Normal Conditions of Transport) 5.3-24
Table 5.3-10 LWT Cask Plan of Conveyance Dose Rates (Normal Conditions of Transport) 5.3-24
Table 5.3-11 LWT Cask 2 Meter Off the Plane of Conveyance Dose Rates (Normal Conditions of Transport) 5.3-25
Table 5.3-12 LWT Cask 1 Meter From the Cask Surface Dose Rates (Normal Conditions of Transport) 5.3-25
Table 5.3-13 Axial Surface Dose Rates at Cask Lid (Normal Conditions of Transport) 5.3-26
Table 5.3-14 LWT Cask Dose Rates 5 Meters from the Cask Lid (Back of Tractor Cab) for Normal Conditions of Transport 5.3-27
Table 5.3-15 LWT Cask Dose Rates – 1 Meter from the Cask Surface (Hypothetical Accident Conditions) 5.3-27

Table 5.3-16 25 PWR Fuel Rods Design Basis Fuel Source Spectra 5.3-29
Table 5.3-17 Material Densities for 25 Design Basis PWR Rods Fuel Shielding Analysis ... 5.3-30
Table 5.3-18 Cask Radial Dose Rates with 25 Design Basis PWR Fuel Rods (mrem/hr) 5.3-31
Table 5.3-19 TRIGA Fuel Element Gamma Source Term - Normal Transport (ACPR, 86,100 MWd/MTU, 231 Days Cooling, 50% ^{235}U Depletion) 5.3-46
Table 5.3-20 TRIGA Fuel Element Neutron Source Term - Normal Transport (ACPR, 86,100 MWd/MTU, 231 Days Cooling, 50% ^{235}U Depletion) 5.3-47
Table 5.3-21 TRIGA Fuel Element Gamma Source Term - Accident Conditions (FLIP-LEU-II, 151,100 MWd/MTU, 908 Days Cooling, 80% ^{235}U Depletion) 5.3-48
Table 5.3-22 TRIGA Fuel Element Neutron Source Term - Accident Conditions (FLIP-LEU-II, 151,100 MWd/MTU, 908 Days Cooling, 80% ^{235}U Depletion) 5.3-49
Table 5.3-23 Material Densities for TRIGA Fuel Element Shielding Analysis 5.3-50
Table 5.3-24 TRIGA Fuel Cluster Rod Parameters 5.3-54
Table 5.3-25 Incoloy 800 Clad Composition 5.3-55
Table 5.3-26 Representative TRIGA Fuel Cluster Rod Gamma Spectra at 180 GWd/MTU and 1.849 yr. Cool Time 5.3-56
Table 5.3-27 Representative TRIGA Fuel Cluster Rod Neutron Spectrum at 180 GWd/MTU and 1.849 yr. Cool Time 5.3-57
Table 5.3-28 Fuel Basket Region Material Composition Used in Shielding Analysis 5.3-58
Table 5.3-29 Normal Condition Dose Response to Gammas for TRIGA Fuel Cluster Rods. 5.3-59
Table 5.3-30 Normal Condition Dose Response to Neutrons for TRIGA Fuel Cluster Rods 5.3-59
Table 5.3-31 Accident Condition Dose Response to Gammas for TRIGA Fuel Cluster Rods5.3-60
Table 5.3-32 Accident Condition Dose Response to Neutrons for TRIGA Fuel Cluster Rods5.3-60
Table 5.3-33 TRIGA Fuel Cluster Rod Required Cool Time at Various Fuel Burnups 5.3-61
Table 5.3-34 High Burnup Fuel Rod Model Parameters 5.3-70
Table 5.3-35 High Burnup Fuel Assembly Model Parameters 5.3-70
Table 5.3-36 SCALE 27N18G Neutron Group Structure and ANSI Dose Factors 5.3-71
Table 5.3-37 SCALE 27N18G Gamma Group Structure and ANSI Dose Factors 5.3-72
Table 5.3-38 LWT Cask Total Decay Heat [kW] for 25 Rods at Various CoolTimes 5.3-73
Table 5.3-39 PWR 80,000 MWd/MTU Fuel Model Neutron Source Term [n/sec/assy] 5.3-74
Table 5.3-40 PWR 80,000 MWd/MTU Fuel Model Gamma Source Term [γ/sec/assy] 5.3-74
Table 5.3-41 BWR 7×7 60,000 MWd/MTU Fuel Model Neutron Source Term [n/sec/assy] 5.3-75
Table 5.3-42 BWR 7×7 60,000 MWd/MTU Fuel Model Gamma Source Term [γ/sec/assy] 5.3-75

Table 5.1-2 Design Basis Fuel for Shielding Evaluation (continued)

Parameter	GA IFM RERTR	GA IFM HTGR	PULSTAR Fuel	Spiral Fuel Assembly	MOATA Plate Bundle
Assembly Array	N/A	N/A	5×5	Spiral Plates	Parallel Plates
Assembly or Element Weight (lbs)	23.73	23.52	45 (assembly); 1.3 (element)	7.9	13.6[11]
Assembly/Element/Rod Length (in)	29.92	N/A	38 (assembly) 26.2 (element)	63.5 cm	58.4 cm[12]
Active Fuel Length (in)	22.05	N/A	24.1	60.325 cm	58.4 cm
No. Rods per Assembly	13 intact; 7 sectioned	N/A	25	N/A	N/A
No. of Plates per Element	N/A	N/A	N/A	10	maximum 14
Fuel Rod Diameter/Plate Thickness (in)	0.543	N/A	0.47	0.147 cm	0.203 cm
Clad Material	Incoloy	N/A	Zirconium alloy	Al	Al
Clad Thickness (in)	0.031	N/A	0.0185	0.043 cm	N/A
Pellet Diameter/Meat Thickness (in)	0.512	N/A	0.423	0.061 cm	0.1016 cm
Fuel Material	U-ZrH	UC_2; UCO; UO_2; $(Th,U)C_2$; or $(Th,U)O_2$	UO_2	U-Al	U-Al
Percent Theoretical Density	N/A	N/A	94.9% (nominal); 99.5% (analyzed)	N/A	N/A
Enrichment (wt % ^{235}U)	19.7	93.15 (maximum)	6	75	80
Maximum Average Burnup (MWd/MTU)	N/A	N/A	45	70% ^{235}U depletion	30,000 MWd/MTU 4.1% ^{235}U depletion
Minimum Cool Time	None	None	1.0 Year	see MEU DIDO	10 yr
U Weight (kg/assembly)	8.49	0.45	13.33	0.213[13]	0.4375[14]
U Weight (kg/element)	0.42	N/A	0.53	0.0213[15]	0.03125[16]
UO_2 Weight (kg/assembly)	N/A	N/A	15.13	N/A	N/A

Notes: (cont'd)

11. For 14-fuel plate bundle.
12. Not available for in-core configuration. Analysis input restricted to active fuel length.
13. Based on a 160 g ^{235}U fissile material load and listed enrichment.
14. Based on fuel mass per plate multiplied by 14 plates.
15. Based on 10 plates per assembly.
16. Based on 25 g ^{235}U and listed enrichment.

Table 5.1-3 Nuclear and Thermal Source Parameters

Payload	Decay Heat (kW)	Gamma Source (MeV/sec) (g/sec)	Neutron Source (n/sec)	Top End-Fitting (g/sec)	Bottom End-Fitting (g/sec)
1 PWR Assembly	2.5	7.78E+15 1.27E+16	2.21E+08	1.49E+13	1.25E+13
2 BWR Assemblies	2.2	6.35E+15 1.04E+16	1.34E+08	1.16E+12	2.78E+12
15 Sound Metallic Fuel Rods[2]	0.532	8.81E+14 4.37E+15	1.61E+05	N/A	N/A
6 Failed Metallic Fuel Rods[1]	0.03	3.53E+14 1.75E+15	6.44E+04	N/A	N/A
42 HEU MTR Elements[3,8]	1.26	- - 7.42E+15	1.40E+08	N/A[15]	N/A[15]
42 MEU MTR Elements[3,8]	1.26	- - 7.86E+15	2.88E+07	N/A[15]	N/A[15]
42 LEU MTR Elements[3,8,14]	1.26	- - 7.51E+15	3.96E+07	N/A[15]	N/A[15]
42 DIDO Assemblies[10]	1.05	- - 6.07E+15	9.73E+04	N/A	N/A
25 PWR Rods[2]	1.41	3.47E+15 8.39E+15	1.40E+08	N/A	N/A
TRIGA (140 Elements)[7] Normal Condition	1.05	2.15E+15[4] 6.52E+15[4]	1.57E+06	Note 6	Note 6
TRIGA (140 Elements)[7] Accident Condition	1.05	2.60E+15[5] 5.97E+15[5]	1.06E+08	Note 6	Note 6
General Atomics Irradiated Fuel Material	0.013	- - 3.429E+13	1.279E+04	Note 11	Note 11
300 Production TPBARs	1.005	5.030E+15 6.681E+15	N/A	N/A	N/A
55 PIE TPBARs	1,005	3.63E+13 5.6E_13	N/A	N/A	N/A
PULSTAR Fuel	1.05[12]	6.206E+15	2.115E+07	N/A	N/A
Spiral Fuel Assembly[13]	0.756	--- 1.07E +14	4.54E+3	N/A	N/A
MOATA Plate Bundle	0.042	--- 2.2E +12	< 1E+3	N/A	N/A

Notes:

1. Gamma and neutron source terms conservatively calculated based on design basis sound metallic fuel rods.
2. 23 rods with 60,000 MWd/MTU burnup and two rods with 65,000 MWd/MTU burnup. Source terms as a function of cool time for the 80,000 MWd/MTU burnup PWR and BWR rods are presented in Section 5.3.8.
3. Bounding values of the gamma and neutron source terms presented for 30W uniform loading for 80% burnup.
4. Based on TRIGA ACPR fuel (86,100 MWd/MTU, 231 days cooling, 50% ^{235}U depletion).
5. Based on TRIGA FLIP-LEU-II fuel (151,100 MWd/MTU, 908 days cooling, 80% ^{235}U depletion).
6. Total hardware gamma is 7.64E+14 gamma/second for ACPR fuel (86,100 MWd/MTU, 231 days cooling, 50% ^{235}U depletion).
7. TRIGA Fuel Elements are the bounding values used in dose determination for TRIGA cluster rods fuel type.
8. Moderator used is light water, H_20.
9. Moderator used is heavy water, D_20.
10. Bounding values of the gamma and neutron source terms presented for 25W uniform loading for 70% burnup HEU fuel.
11. Hardware activation, including end-fitting sources, for the TRIGA elements included in the total gamma source for GA IFM.
12. Cool time required to meet 30 watt per cell heat load limit is 1.5 years.
13. Based on 18 W per assembly heat load.
14. Fuel source represents maximum magnitude gamma source obtained from the 470 g ^{235}U analysis, and the maximum neutron source obtained from the 640 g ^{235}U analysis.
15. A maximum 100 grams of cadmium may be included as part of the MTR fuel element or plate construction. Activation of the cadmium produces no significant source per Section 5.3.4.

The MTR fuel assembly consists of plates held in a parallel arrangement by thick aluminum slotted side plates. The number of fuel plates range from 17 to 23 per assembly, and the analysis assumed the maximum 23 plate value for each of the three MTR fuel types.

The design basis MTR fuel assemblies were constructed using typical MTR parameters. The physical characteristics of the analyzed LEU, MEU and HEU fuel assemblies are shown in Table 5.3-3. The fueled section of the assembly consists of 23 plates of 0.050-inch thickness and two side plates 0.187-inch thick, which do not contain fuel. The fuel core of each fuel plate is a cermet of aluminum and U-Al, which is 0.020-inch thick. The 6061 aluminum cladding has a minimum thickness of 0.015-inch. The HEU fresh fuel load analyzed consists of either 380 grams or 460 grams of ^{235}U per assembly 90% enriched. The initial enrichment is used to encompass other HEU MTR fuel types.

The SAS2H sequence was used to determine the gamma and neutron source terms and decay heat loads for the evaluated MTR fuel assembly loading configurations. The SAS2H sequence includes the ORIGEN-S code and a 1D XSDRNPM model of the fuel assembly. ORIGEN-S performs fuel assembly depletion at specified operating conditions and calculates heat generation, gamma and neutron spectra for a given discharge isotopic composition as a function of out of reactor time (cooling time). The 1D model of the fuel assembly is used to collapse the 27 group neutron cross section library (27GROUPNDF4) into three broad energy groups for the depletion calculation. The 1D model is based on an equivalent area representation of the fuel/moderator cell and surrounding structural regions. Average power is based on reactor maximum power divided by the number of assemblies in the core.

For the HEU fuel, separate analyses were performed for ^{235}U loadings of 380 grams and 460 grams. For the 380 gram ^{235}U loading, the maximum allowable burnup was 660,000 MWd/MTU. For the 460 gram ^{235}U loading, dose rates exceeding 10 CFR 71 limits were calculated at 660,000 MWd/MTU, so the burnup was limited to 577,500 MWd/MTU. Calculated dose rates are higher for the 380 gram ^{235}U loading at 660,000 MWd/MTU.

For the bounding HEU fuel with 380 grams ^{235}U, a series of eight cases were run in which burnup was varied from a minimum of 82,500 MWd/MTU to a maximum of 660,000 MWd/MTU. Cooling times were considered from 90 days to 6.0 years. Because the cask is loaded based on the decay heat limits, no single design basis fuel assembly or loading configuration exists. Design basis photon and neutron source terms for MTR assemblies with decay heats loads of 20, 30, 70 and 120 watts are determined for the 660,000 MWd/MTU burnup

case, which was bounding. The SAS2H results from these cases are used for the design basis photon and neutron source terms and are summarized in Table 5.3-4 and Table 5.3-5 for 380 grams ^{235}U and Table 5.3-6 and Table 5.3-7a for 460 grams ^{235}U. The material densities used in the analysis are summarized in Table 5.3-8.

MTR elements may contain a small amount of cadmium (maximum 100 grams Cd) in the form of nonfuel hardware. Table 5.3-7b and Table 5.3-7c contain comparisons of the cadmium light element gamma source compared to the U-Al fuel material gamma source. The light element source is produced during the SAS2H depletion analysis and applies 100% of the element flux levels. Included for comparison are HEU (460 gram) and LEU (640 gram) fuel types at the maximum allowed burnup (i.e., maximum activation) and cool times required to meet 30 watts (uniform heat load limit per element). Also shown are conservative comparisons of the design basis 30-watt fuel source to a 90-day-cooled Cd source. As shown in the comparison tables, the cadmium source is not significant to NAC-LWT cask shielding evaluations. The hardware gamma source of the cadmium represents less than 0.1% of the fuel gamma source at the required minimum cool time and less than 2% at the conservative 90-day-cooled Cd source. As the majority of the Cd source is at energy lines less than 0.5 MeV and does not penetrate the NAC-LWT cask shields, the actual effect on dose rates is even smaller than that indicated by the difference in total source magnitude.

Based on the MTR source term calculation, the (alpha, n) reactions in ^{27}Al and ^{28}Si are included in the MTR neutron source term. The (alpha, n) reactions in ^{27}Al and ^{28}Si increase the neutron source term by a factor of ~2.9. Consequently, a factor of 2.9 is applied to the MTR neutron source terms.

The SAS4 (Tang) sequence is used to calculate the dose rates at all points of interest. In this sequence, a 1D adjoint XSDRNPM model generates biasing parameters for a 3D MORSE Monte Carlo model of the NAC-LWT cask with the MTR fuel. SAS4 requires model symmetry about the active fuel midplane (midplane of the six basket modules in this case). A 3D Monte Carlo model is developed for the upper half of the cask. This model bounds the results for a lower half model as the cask has more shielding in the axial direction at the bottom end. The upper half model is shown in Figure 5.3-8a. The model assumes that the fuel is at the highest point in the basket module, that the fuel is loaded in the same way axially in all of the modules, and it ignores the presence of the impact limiters. Detectors are placed at three radial locations of interest. These locations are: 1) cask surface; 2) one meter from the cask surface; and 3) at two meters from the edge of the cask conveyance.

5.3.4.1 Shielding Evaluation for MTR Fuel

This section presents the shielding analyses for normal conditions of transport, illustrates compliance with 10 CFR Part 71. In normal transport, the dose rate limits are:

- The dose rate on the surface of the package is less than 200 mrem/hr, except that localized dose rates up to 1000 mrem/hr are allowed if it is shown that the dose rate on the surface of the ISO enclosure is less than 200 mrem/hr.
- At 2 meters from the edge of the transport vehicle the dose rate is limited to 10 mrem/hr.
- The truck cab (defined as a point 5 meters from the NAC-LWT lid) dose rate is limited to 2 mrem/hr.

The dose rates for the bounding loading configuration (Configuration 1) are shown in Table 5.3-9, Table 5.3-10 and Table 5.3-11 for the cask surface, plane of conveyance, and at 2 meters from the edge of the conveyance, respectively. These dose rates are well below the regulatory limits. The dose rates at 1 meter from the cask surface are presented in Table 5.3-12, where the maximum dose rate defines the Transport Index (TI) for the cask.

The axial surface and the 5 meter (back of tractor cab) dose rates are shown in Table 5.3-13 and Table 5.3-14. Shielding provided by the impact limiter is conservatively neglected. The axial dose rates at the bottom of the cask are conservatively assumed to be equal to the dose rates reported at the top.

This evaluation shows that the NAC-LWT cask, with up to 42 MTR fuel assemblies, meets the shielding requirements of 10 CFR 71, 49 CFR 173, and IAEA Transportation Safety Standards (TS-R-1).

5.3.4.2 Accident Conditions of Transport

This section presents the accident condition shielding analyses. Under accident conditions, the NRC limits the package dose rate to 1000 mrem/hr at 1 meter off the package surface. The only accident condition examined in this section is the loss of the LWT liquid neutron shield.

This analysis examines Configuration 1 consistent with the limiting configuration analysis for normal conditions of transport presented in Section 0. The accident condition source terms are identical to the normal condition source terms. The accident condition results are presented in Table 5.3-15.

Figure 5.3-7 MTR Fuel Evaluated Configurations

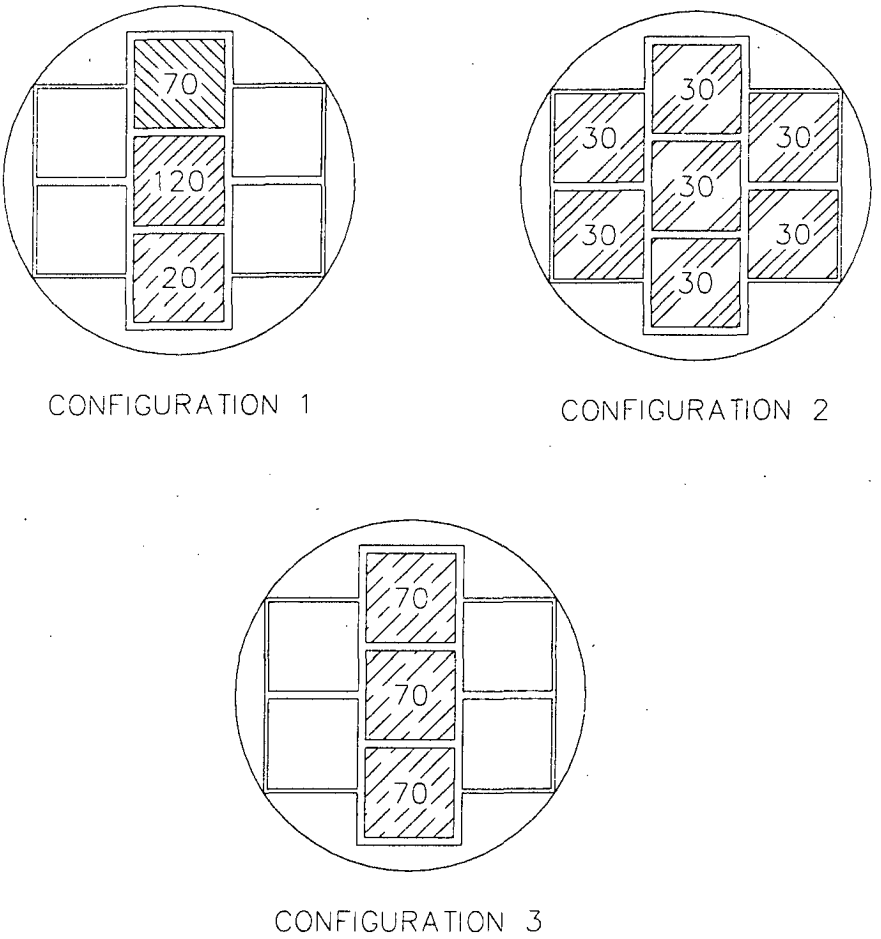

Figure 5.3-8a SAS4 Shielding Model for the MTR Fuel Basket in the NAC-LWT (Upper Half)

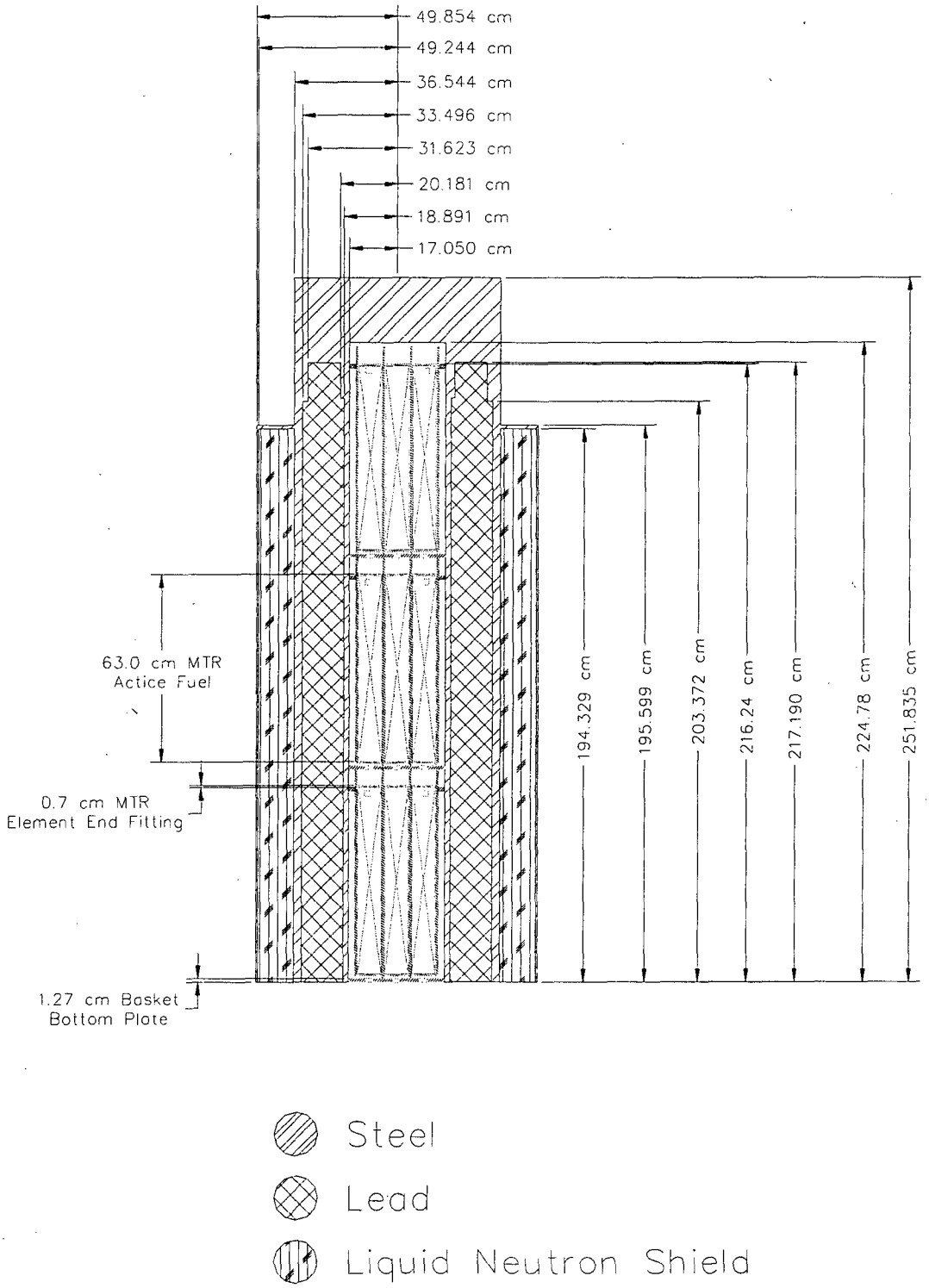

Figure 5.3-8b Dose Rates 2 Meters from Transport Vehicle (30 W Uniform Loading)

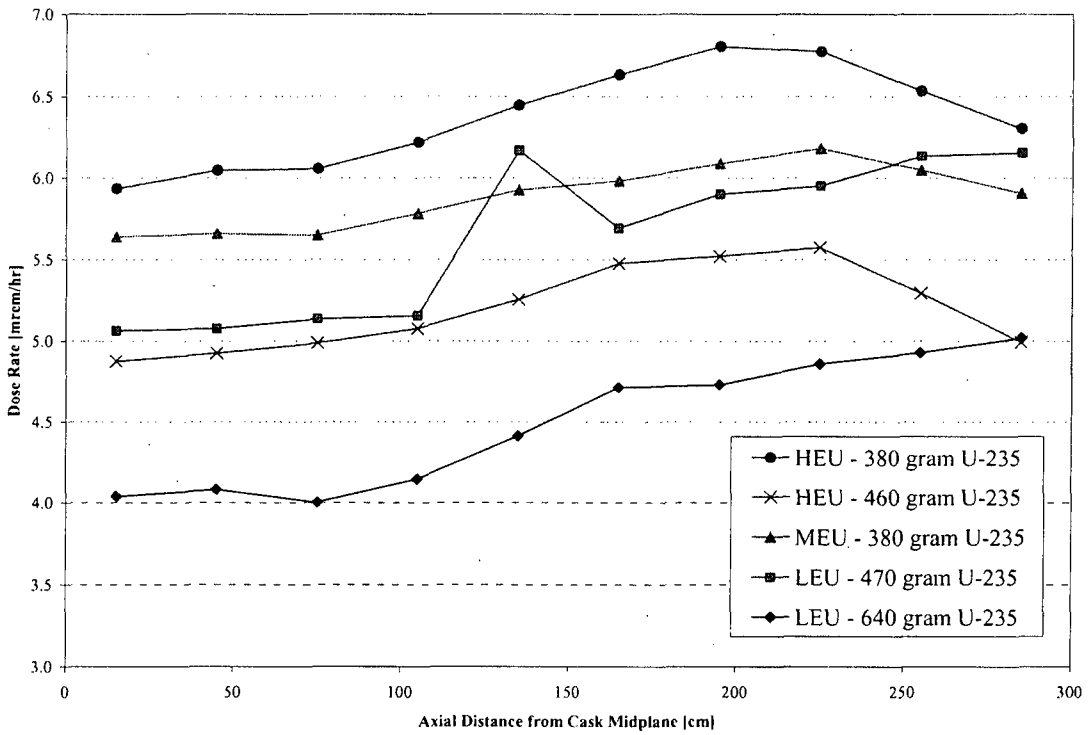

Table 5.3-6 MTR Fuel Element Gamma Source Terms by Thermal Output – 460 grams ^{235}U

Burnup 577,500 MWD/MTU			MTR Assembly Thermal Output			
			20 Watts	30 Watts	70 Watts	120 Watts
Group	E_{hi} (Mev)	E_{low} (Mev)	2247 Days (g/sec)	1467 Days (g/sec)	602 Days (g/sec)	341 Days (g/sec)
1	10.00	8.00	1.07E+03	1.16E+03	1.31E+03	1.40E+03
2	8.00	6.50	5.02E+03	5.48E+03	6.18E+03	6.59E+03
3	6.50	5.00	2.56E+04	2.80E+04	3.15E+04	3.36E+04
4	5.00	4.00	6.38E+04	6.97E+04	7.86E+04	8.38E+04
5	4.00	3.00	2.70E+07	1.15E+08	5.77E+08	9.39E+08
6	3.00	2.50	2.33E+08	1.02E+09	5.47E+09	9.13E+09
7	2.50	2.00	2.08E+10	1.34E+11	1.08E+12	2.03E+12
8	2.00	1.66	5.73E+09	2.12E+10	1.27E+11	2.30E+11
9	1.66	1.33	5.49E+11	1.12E+12	2.93E+12	4.14E+12
10	1.33	1.00	1.86E+12	2.73E+12	5.18E+12	6.81E+12
11	1.00	0.80	7.73E+12	1.52E+13	3.37E+13	4.34E+13
12	0.80	0.60	4.20E+13	6.08E+13	1.12E+14	2.09E+14
13	0.60	0.40	1.56E+13	3.21E+13	7.58E+13	1.02E+14
14	0.40	0.30	9.39E+11	1.68E+12	7.05E+12	1.24E+13
15	0.30	0.20	1.46E+12	2.44E+12	9.31E+12	1.63E+13
16	0.20	0.10	5.34E+12	9.69E+12	4.10E+13	7.28E+13
17	0.10	0.05	6.58E+12	1.09E+13	4.07E+13	7.09E+13
18	0.05	0.01	2.26E+13	3.60E+13	1.26E+14	2.17E+14
Total	--	--	1.05E+14	1.73E+14	4.55E+14	7.56E+14

Table 5.3-7a MTR Fuel Element Neutron Source Terms by Thermal Output – 460 grams ^{235}U

Burnup 577,500 MWD/MTU			MTR Assembly Thermal Output			
			20 Watts	30 Watts	70 Watts	120 Watts
Group	E_{hi} (Mev)	E_{low} (Mev)	2247 Days (n/sec)	1467 Days (n/sec)	602 Days (n/sec)	341 Days (n/sec)
1	2.00E+01	6.43E+00	3.49E+04	3.83E+04	4.33E+04	4.61E+04
2	6.43E+00	3.00E+00	4.12E+05	4.50E+05	5.09E+05	5.46E+05
3	3.00E+00	1.85E+00	4.83E+05	5.24E+05	5.89E+05	6.29E+05
4	1.85E+00	1.40E+00	2.59E+05	2.83E+05	3.19E+05	3.38E+05
5	1.40E+00	9.00E-01	3.42E+05	3.74E+05	4.22E+05	4.48E+05
6	9.00E-01	4.00E-01	3.68E+05	4.03E+05	4.55E+05	4.84E+05
7	4.00E-01	1.00E-01	7.19E+04	7.87E+04	8.90E+04	9.47E+04
8	1.00E-01	1.70E-02	0.00E+00	0.00E+00	0.00E+00	0.00E+00
9	1.70E-02	3.00E-03	0.00E+00	0.00E+00	0.00E+00	0.00E+00
10	3.00E-03	5.50E-04	0.00E+00	0.00E+00	0.00E+00	0.00E+00
11	5.50E-04	1.00E-04	0.00E+00	0.00E+00	0.00E+00	0.00E+00
12	1.00E-04	3.00E-05	0.00E+00	0.00E+00	0.00E+00	0.00E+00
13	3.00E-05	1.00E-05	0.00E+00	0.00E+00	0.00E+00	0.00E+00
14	1.00E-05	3.05E-06	0.00E+00	0.00E+00	0.00E+00	0.00E+00
15	3.05E-06	1.77E-06	0.00E+00	0.00E+00	0.00E+00	0.00E+00
16	1.77E-06	1.30E-06	0.00E+00	0.00E+00	0.00E+00	0.00E+00
17	1.30E-06	1.13E-06	0.00E+00	0.00E+00	0.00E+00	0.00E+00
18	1.13E-06	1.00E-06	0.00E+00	0.00E+00	0.00E+00	0.00E+00
19	1.00E-06	8.00E-07	0.00E+00	0.00E+00	0.00E+00	0.00E+00
20	8.00E-07	4.00E-07	0.00E+00	0.00E+00	0.00E+00	0.00E+00
21	4.00E-07	3.25E-07	0.00E+00	0.00E+00	0.00E+00	0.00E+00
22	3.25E-07	2.25E-07	0.00E+00	0.00E+00	0.00E+00	0.00E+00
23	2.25E-07	1.00E-07	0.00E+00	0.00E+00	0.00E+00	0.00E+00
24	1.00E-07	5.00E-08	0.00E+00	0.00E+00	0.00E+00	0.00E+00
25	5.00E-08	3.00E-08	0.00E+00	0.00E+00	0.00E+00	0.00E+00
26	3.00E-08	1.00E-08	0.00E+00	0.00E+00	0.00E+00	0.00E+00
27	1.00E-08	0.00E+00	0.00E+00	0.00E+00	0.00E+00	0.00E+00
Total	--	--	1.97E+06	2.15E+06	2.43E+06	2.59E+06

Table 5.3-7b LEU MTR Hardware Source to Fuel Source Comparison

Group	E_{hi} (Mev)	E_{low} (Mev)	834 days Fuel (γ/sec)	Cd at 834 days 100 g Cd (γ/sec)	Cd Source % of Fuel Gamma	Cd at 90 days 100 g Cd (γ/sec)	Cd Source % of Fuel Gamma
1	10.00	8.00	6.30E+02	0.00E+00	0.0%	0.00E+00	0.0%
2	8.00	6.50	2.97E+03	0.00E+00	0.0%	0.00E+00	0.0%
3	6.50	5.00	1.51E+04	0.00E+00	0.0%	0.00E+00	0.0%
4	5.00	4.00	3.78E+04	0.00E+00	0.0%	0.00E+00	0.0%
5	4.00	3.00	2.57E+08	4.49E-16	0.0%	1.80E-15	0.0%
6	3.00	2.50	2.16E+09	3.23E+00	0.0%	2.55E+01	0.0%
7	2.50	2.00	1.72E+11	1.19E+03	0.0%	9.38E+03	0.0%
8	2.00	1.66	3.60E+10	5.80E+04	0.0%	5.04E+05	0.0%
9	1.66	1.33	8.12E+11	7.57E+07	0.0%	6.35E+08	0.1%
10	1.33	1.00	2.68E+12	8.65E+05	0.0%	2.07E+09	0.1%
11	1.00	0.80	9.90E+12	2.11E+08	0.0%	5.66E+09	0.1%
12	0.80	0.60	6.14E+13	2.87E+08	0.0%	3.49E+09	0.0%
13	0.60	0.40	2.21E+13	2.13E+07	0.0%	3.12E+09	0.0%
14	0.40	0.30	2.36E+12	2.19E+08	0.0%	3.55E+09	0.2%
15	0.30	0.20	3.34E+12	8.06E+08	0.0%	5.78E+09	0.2%
16	0.20	0.10	1.27E+13	4.57E+09	0.0%	2.32E+10	0.2%
17	0.10	0.05	1.45E+13	1.17E+10	0.1%	3.88E+10	0.3%
18	0.05	0.01	4.76E+13	5.52E+10	0.1%	1.65E+11	0.3%
Total	--	--	1.78E+14	7.31E+10	0.0%	2.51E+11	0.1%

Table 5.3-7c HEU MTR Hardware Source to Fuel Source Comparison

Group	E_{hi} (Mev)	E_{low} (Mev)	1467 days Fuel (γ/sec)	Cd at 1467days 100 g Cd (γ/sec)	Cd Source % of Fuel Gamma	Cd at 90 days 100 g Cd (γ/sec)	Cd Source % of Fuel Gamma
1	10.00	8.00	1.16E+03	0.00E+00	0.0%	0.00E+00	0.0%
2	8.00	6.50	5.48E+03	0.00E+00	0.0%	0.00E+00	0.0%
3	6.50	5.00	2.80E+04	0.00E+00	0.0%	0.00E+00	0.0%
4	5.00	4.00	6.97E+04	0.00E+00	0.0%	0.00E+00	0.0%
5	4.00	3.00	1.15E+08	8.77E-15	0.0%	1.14E-13	0.0%
6	3.00	2.50	1.02E+09	2.69E+00	0.0%	1.23E+02	0.0%
7	2.50	2.00	1.34E+11	9.89E+02	0.0%	4.52E+04	0.0%
8	2.00	1.66	2.12E+10	4.82E+04	0.0%	2.49E+06	0.0%
9	1.66	1.33	1.12E+12	6.30E+07	0.0%	3.66E+09	0.3%
10	1.33	1.00	2.73E+12	7.02E+05	0.0%	4.30E+10	1.6%
11	1.00	0.80	1.52E+13	1.75E+08	0.0%	9.22E+10	0.6%
12	0.80	0.60	6.08E+13	2.38E+08	0.0%	2.76E+10	0.0%
13	0.60	0.40	3.21E+13	4.54E+07	0.0%	5.33E+10	0.2%
14	0.40	0.30	1.68E+12	5.87E+08	0.0%	6.72E+10	4.0%
15	0.30	0.20	2.44E+12	2.16E+09	0.1%	1.01E+11	4.2%
16	0.20	0.10	9.69E+12	1.23E+10	0.1%	3.51E+11	3.6%
17	0.10	0.05	1.09E+13	3.01E+10	0.3%	5.20E+11	4.8%
18	0.05	0.01	3.60E+13	1.33E+11	0.4%	1.75E+12	4.9%
Total	--	--	1.73E+14	1.79E+11	0.1%	3.01E+12	1.7%

Chapter 6

6.0 CRITICALITY EVALUATION

The NAC-LWT cask is designed to transport either 1 pressurized water reactor (PWR) assembly; up to 25 intact PWR or BWR rods in a rod holder or fuel assembly lattice; up to 25 PWR or BWR fuel rods with a maximum of 14 of the rods classified as damaged in a rod holder; 2 boiling water reactor (BWR) assemblies; 15 sound metallic fuel rods; 6 failed metallic fuel rods; up to 42 high enriched uranium (HEU), medium enriched uranium (MEU) or low enriched uranium (LEU) Materials Test Reactor (MTR) fuel elements, or DIDO fuel assemblies; up to 140 TRIGA fuel elements; two packages of General Atomics Irradiated Fuel Material (GA IFM); up to 560 TRIGA fuel cluster rods; 1 consolidation canister with up to 300 TPBARs (including up to 2 damaged TPBARs); up to 700 PULSTAR fuel elements; up to 42 spiral fuel assemblies; or up to 42 MOATA plate bundles. This chapter illustrates that all packages meet the requirements of parts 71.55, 71.59 and 71.71 of 10 CFR 71.

In accordance with the requirements of 10 CFR 71.59 (b), the NAC-LWT cask is assigned a Criticality Safety Index (CSI) for criticality control for the authorized contents as follows: 100 for PWR assemblies; 5 for BWR assemblies; 12.5 for DIDO assemblies; 0 for metallic fuel, TPBARs, spiral fuel assemblies, MOATA plate bundles, high burnup PWR or BWR rods with up to 14 damaged rods, MTR elements, TRIGA fuel elements and fuel cluster rods, and GA IFM packages. The CSI for PULSTAR fuel is 0 for a payload of intact elements and 33.4 for a mixed payload of intact and damaged elements.

THIS PAGE INTENTIONALLY LEFT BLANK

6.2.3 MTR Fuel Elements

The NAC-LWT MTR basket designs can transport up to 42 MTR research reactor fuel elements. This configuration consists of seven fuel elements placed radially in each of four, five or six axial fuel basket segments. The analysis provided herein is bounding for all MTR element loading configurations.

An MTR fuel element comprises fuel plates held in a parallel arrangement by thick aluminum slotted side plates. The number of fuel plates range from 10 to 23 per element. The fuel plates have a fuel meat composed of either U_3O_8-Al, U-Al or USi-Al. The listed fuel enrichment ranges up to slightly greater than 93 wt% ^{235}U. Thus, initial criticality analysis is performed at a nominal 93 wt% ^{235}U with a reactivity penalty of ±1 wt% ^{235}U applied to allow for enrichment variation up to 94 wt% and with a reactivity penalty of ±5 grams per element to allow for loading variation up to 355 grams per element. Figure 6.2.3-1 shows a cross-sectional view of the design basis MTR fuel element. The various design basis HEU, LEU and MEU MTR fuel characteristics are shown in Table 6.2.3-1, Table 6.2.3-2 and Table 6.2.3-3, respectively. The High Flux Beam Reactor (HFBR) is modeled in the criticality analysis as the design basis MTR fuel element design, and is shown in Figure 6.2.3-1. The listed fuel dimensions are extended to arrive at bounding fuel configurations in Section 6.4.3.

The bounding fuel dimensions provide for loading MTR fuel elements containing up to a maximum ^{235}U content of 460 grams (20 grams per plate in 23 plates), and LEU specific loads up to 736 grams ^{235}U (32 grams per plate in 23 plates). Total ^{235}U content of the fuel elements modeled in the criticality evaluations may exceed that used in the Chapter 5 shielding analysis. For cases containing a lower fissile material content in the shielding evaluations, the lower value represents the cask payload limit.

MTR fuel plates can also be transported. The loose plates are placed inside an MTR plate canister prior to placement into the NAC-LWT MTR basket. The number of fuel plates in each canister is restricted to that of an equivalent MTR fuel element.

Figure 6.2.3-1 Design Basis HFBR MTR Fuel Element

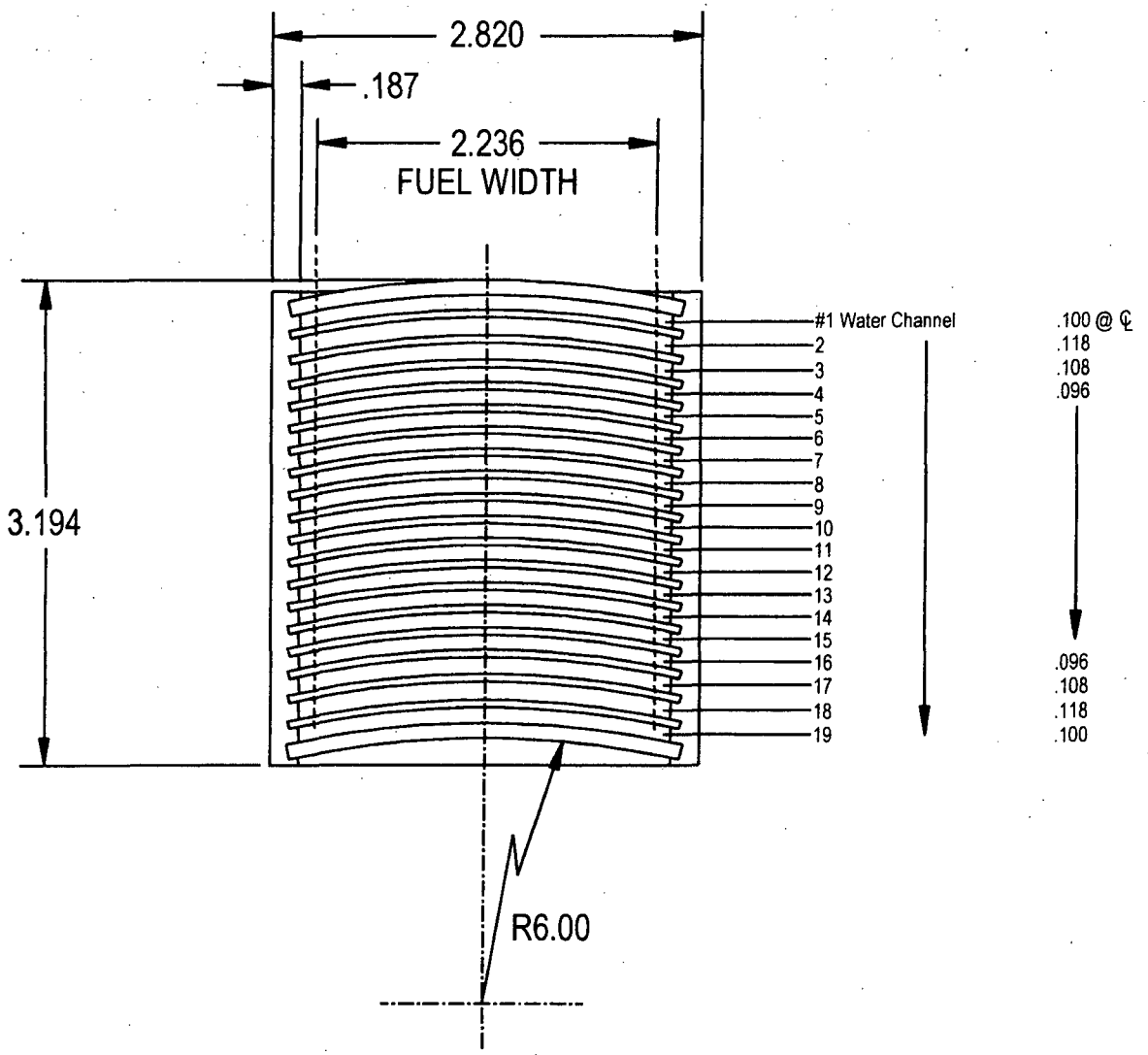

(18) INNER FUEL PLATES, 23 3/4" LONG, .050" THICK
FUEL ALLOY CORE 22 3/4 LONG, .021 THICK
CLADDING .0145" THICK. TOTAL U^{235} CONTENT-351 g
OUTER ALUMINUM PLATES .100" THICK

6.4.3 MTR Fuel Elements

This section presents the criticality analyses for the NAC-LWT with the MTR fuel element and basket configuration. Criticality analyses of the seven element arrangement with the most limiting assembly type are performed with the SCALE 4.3 CSAS sequence to satisfy the criticality safety requirements of 10 CFR Parts 71.55 and 71.59 as well as IAEA Transportation Safety Standards (TS-R-1). In this analysis, the bounding MTR fuel element type is determined, and an infinite array of NAC-LWT casks loaded with this design basis MTR fuel is studied for criticality under normal and accident conditions. Spacing between the casks and moderator density in the cavity, neutron shield tank and outside is varied to determine the maximum k_{eff}. The reactivity effects of partial basket loading, loss of fuel integrity and mechanical and geometric perturbations of the fuel elements and basket plate material are quantified. The analyses demonstrate that, including all calculational and mechanical uncertainties, the NAC-LWT remains subcritical under normal and accident conditions for all MTR fuel elements that are bounded in enrichment and fissile uranium loading by the design basis assembly.

6.4.3.1 Design Basis MTR Fuel Element

The fuel/basket unit cell k_{eff} values for the HEU and LEU MTR element types are shown in Table 6.4.3-1. The results show that the HEU ORR #2, HEU HFBR and the LEU BSR fuel elements are significantly more reactive than the other element types. In addition, these three element types have the highest fissile loadings, as listed in Table 6.2.3-1 and Table 6.2.3-2. Furthermore, a study of the reactivity of the highest fissile uranium loading HEU (HFBR) and LEU (BSR) elements as a function of the spacing between fuel plates is performed, as shown in Table 6.4.3-2. As shown, the HFBR fuel element is the most reactive when the plates are free to expand to their maximum possible pitch with the basket opening, as is postulated to occur under accident conditions. Also, it is shown that the HFBR element is most reactive with its full load of 18 fuel plates. The greater spacing allowed by fewer fuel plates is shown to be less reactive. Because of this and the minor difference between the other fuel types for intact elements, the HFBR element is chosen as the design basis for further analyses.

6.4.3.2 MTR Fuel Perturbation Studies

The criticality evaluation of the NAC-LWT cask with the baskets fully loaded with design basis HFBR MTR fuel elements includes studying geometric tolerances, mechanical perturbations, moderator (H_2O) density variation and spacing variation between casks. Moderator density is varied from 1.0 gm/cc to 0.0 gm/cc. Cask center to center spacing is varied from touching

(99.7 cm cask pitch) to ISO-container array spacing (242.84 cm cask pitch). Under normal conditions it is assumed that the neutron shield is filled with water and the fuel element plate spacing is intact. Under accident conditions it is assumed that the fuel element plate spacing is at its most reactive within each basket opening, the neutron shield tank is punctured, and that the moderator density in the tank is the same as the exterior moderator density.

As shown in Table 6.4.3-2, k_{eff} varies significantly with plate spacing. This is because the intact HFBR fuel element is undermoderated. The largest possible pitch of the HFBR fuel plates within the MTR basket, 0.4572 cm, yields the greatest k_{eff}. Hypothetical accident condition analyses utilize fuel plates with this pitch spacing.

Geometric tolerances and mechanical perturbations are independently evaluated for intact HFBR elements during normal conditions, and optimally spaced HFBR fuel plates during accident conditions. The following perturbations and tolerances are analyzed:

I. Mechanical Perturbation
A. Fuel movement in the basket

II. Geometric Tolerances
A. Basket opening size
B. Basket steel plate thickness

The geometric tolerances associated with the manufacture of the MTR basket are listed in Table 6.4.3-3. Mechanical perturbations, i.e., fuel movement within the basket, arises from the gap between the MTR fuel and the basket tube.

The effect of these tolerances and perturbations on the reactivity of intact elements in the MTR basket and NAC-LWT cask is shown in the results presented in Table 6.4.3-4. This table shows there are three perturbations that have a higher k_{eff} than the nominal case. Two of these cases, "elements moved in close" and "elements moved in closest," are mechanical perturbations. These perturbations correspond to moving the outer elements toward the center element first on one axis and then on two axes, i.e., the top and bottom two elements are first moved down and up, respectively and then moved into the corners nearest to the center of the basket. The complementary configurations are labeled "elements moved out" and "elements moved out farthest," i.e., the top and bottom two elements are first moved up and down, respectively, and then moved into the corners farthest from the center of the basket. Since only one of these mechanical perturbations can occur at a time, the configuration with the greatest reactivity, "elements moved in close" is selected as a significant perturbation. The third case, "basket plate minimum thickness," is a geometric perturbation and is also selected as a significant

shields with water reflection is also evaluated (Table 6.4.3-11). The reactivity of the system drops as each radial shield of the cask is replaced by water, from a k_{eff} = 0.8094 ± 0.0021 (k_s = 0.8317) for the full cask surrounded by water, to a k_{eff} = 0.7682 ± 0.0021 (k_s = 0.7905) for the inner shell surrounded by water.

6.4.3.10 MTR Loose Fuel Plate Evaluation

Loose MTR fuel plates may be shipped inside the NAC-LWT using an MTR plate canister. The canister consists of four rectangular aluminum side plates, and top and bottom lids, forming a 2.82 inch by 2.95 inch opening. Two parallel side plates are 0.25 inch (0.635 cm) thick with the remaining two side plates at 0.125-inch (0.3175 cm) thickness. The loose plates are inserted into the canister, which in turn is placed into one of the seven MTR basket openings. The number of fuel plates in each canister is restricted to those of an intact MTR fuel element. By restricting the number of plates to those of an intact fuel element, the criticality evaluation considering optimum pitch of the expanded MTR element, shown in Section 6.4.3.1 and Table 6.4.3-2, is applicable.

While intact, the MTR plate canister restricts the loose fuel plate pitch to a significantly smaller envelope than the basket opening (3.44 inch) employed in the evaluation shown in Table 6.4.3-2. Since the evaluation results in Table 6.4.3-2 indicate an increase in reactivity up to the maximum fuel plate pitch possible in the basket opening, the reactivity of the MTR plate canister configuration will be significantly lower than that of the uncanistered payload.

Also considered for criticality analysis is a loose plate canister configuration in which the canister plate separates. This configuration is bounded by the accident evaluation of MTR fuel plates where the two MTR element side plates separate from the fuel plates. The accident evaluation of MTR plates is the highest reactivity case for MTR fuel and models the maximum fuel plate pitch obtainable in an MTR basket cell. The additional two canister plates running parallel to the fuel plates restrict the maximum plate pitch possible in the canister opening. The reduced pitch reduces the reactivity of the system.

6.4.3.11 Code Bias and Code Bias Uncertainty Adjustments

A calculation of k_s under normal and accident conditions can now be made based on the previous results and based on the SCALE 4.3 CSAS sequence KENO-Va validation statistics presented in Section 6.5.2 for high enriched uranium fuel. The value k_s is calculated based on the KENO-Va Monte Carlo average plus any biases and uncertainties associated with the methods and the modeling,i.e.:

$$k_s = k_{eff} + \Delta k_{Bias} + \Delta k_{BU} + 2\sigma_{MC} \leq 0.95$$

In the validation presented in Section 6.5.2, a bias of -0.0044 (allowance for overprediction of k_{eff}) and a 95/95 method uncertainty of ± 0.0181 was determined. For added conservatism, the -0.0044 bias correction is neglected. With these biases and uncertainties, the equation for k_s becomes:

$$k_s = k_{eff} + 0.0181 + 2\sigma_{MC}$$

Thus, k_s = 0.8336 under normal conditions for an infinite array of NAC-LWT casks with a full load of HFBR design basis fuel elements, and a flooded basket cavity and exterior. Both are below the 0.95 regulatory limit. Under accident conditions, k_s = 0.9242 for an infinite array of NAC-LWT casks with a full load of 94 wt % / 355 g ^{235}U per element HFBR fuel with plates expanded to their maximum pitch within the basket, and with a flooded basket cavity and dry neutron shield and exterior.

For both normal and accident conditions, the calculated k_{eff} values, after correction for biases and uncertainties, are well below the 0.95 limit. The analyses demonstrate that, including all calculational and mechanical uncertainties, an infinite array of NAC-LWT casks with MTR fuel remains subcritical under normal and accident conditions.

6.4.3.12 Bounding Physical Characteristics for MTR Fuel Elements

The purpose of this section is to document an extended licensing envelope for the NAC-LWT cask. This is accomplished by constructing and evaluating an MTR element with a set of physical characteristics bounding the fuel inventory previously documented, with margin for manufacturing tolerance and expected variations in nominal element characteristics. Since this composite fuel element is expected to significantly increase the maximum reactivity of the NAC-LWT MTR configuration, a finite cask model is constructed. The existing evaluations employed an infinite element length model, which by its nature, contained a significant conservative margin that will be required to maximize the MTR payload fissile material quantities.

To establish bounding fuel element criteria, the analysis trends in Sections 6.4.3.1 through 6.4.3.10 are reviewed. Where necessary, additional analysis is performed to establish reactivity trends on the physical parameters of the elements.

set. As shown in the Table 6.4.3-26, the system reactivity of the 32 gram ^{235}U per plate element (Case 25%-J) is above safety limits for both full and partially loaded top and bottom baskets (k_s must be less than 0.95). Partially loading the top and bottom baskets reduces system reactivity by approximately 0.01 Δk across all fuel types. Loading the high fissile mass (high reactivity) 32 g ^{235}U per plate LEU elements in a partially loaded basket, and locating the partially loaded baskets at the top and bottom of the basket stack have no significant effect on system reactivities — i.e., system reactivity is controlled by the adjacent (cask center) baskets containing higher reactivity, fully loaded baskets.

An evaluation of six baskets with four elements per basket of the 32 gram ^{235}U per plate LEU fuel element results in a k_{eff} of approximately 0.7. This clearly demonstrates that removing three elements from the basket reduces the basket reactivity significantly, and that replacing any fully loaded basket by the partially loaded high fissile material content element basket is bounded by the evaluations of a fully loaded (42 element) cask configuration.

Loading of the high fissile material elements is, therefore, allowed provided that the elements meet the characteristics of Table 6.4.3-28, including the limitation that any basket containing LEU MTR plates above 22 gram ^{235}U must be limited to four elements (or an equivalent number of fuel plates in a plate canister) with no fuel material in basket openings 1, 2 and 3 per Figure 6.3.3-5.

The specified (partially loaded) basket configuration relies on the moderator in the center basket row to neutronically separate the fissile material in the outer sections. As moderator density in the cask decreases, neutronic interaction among the high fissile mass LEU elements in the outer basket sections will increase. Because previous evaluations have demonstrated that the MTR element reactivity rapidly decreases as moderator density is decreased, it is, therefore, not expected that reduced moderator density will result in a system reactivity increase. To provide quantitative support to this conclusion, moderator density studies are performed for the system with partially loaded baskets located at the top and bottom of the stack, for a system with partially loaded baskets in the cask center baskets, and for a system containing six partially loaded baskets. The partially loaded baskets contain the high fissile mass LEU elements, while the fully loaded baskets contain the maximum reactivity HEU elements ("94%-D").

As demonstrated in Figure 6.4.3-1 and Table 6.4.3-29, maximum reactivity is achieved by a fully moderated cask interior for all conditions. Figure 6.4.3-1 also contains the results of a full set of moderator density evaluations for a system containing cell blocks that will physically prevent elements from being loaded into baskets containing high fissile mass LEU elements. The block body is composed of an aluminum tube and an aluminum top plate. As the length of the block depends on the type of MTR basket employed, and the tube represents the majority of the block

mass (the top plate occupies less then three cubic inches), only the tube portion of the block is included in the model. As shown in the moderator density plot, Figure 6.4.3-1, and the result summary in Table 6.4.3-29, there is no effect from the insertion of the cell block on the models containing both full and partially loaded baskets, and only a minor effect on the lower reactivity models containing all partially loaded baskets.

6.4.3.15 MTR Payload Criticality Safety Index

Evaluations included in Sections 6.4.1 through 6.4.14 demonstrate that the bias and uncertainty adjusted reactivity (k_s) for an infinite array of NAC-LWT casks containing MTR fuel elements remains below 0.95. Therefore, the Criticality Safety Index (CSI) for all MTR payloads is 0.

Chapter 7

consist of a top module, four intermediate modules and a base module. In the case of MTR fuel elements, the basket assembly can include 2, 3 or 4 intermediate modules, depending on the length and conditions of the fuel contents. Axial fuel spacers and plates may be used as dunnage to axially position the MTR fuel elements in the basket module to facilitate fuel unloading operations.

The fuel content condition (i.e., heat load, fissile mass, minimum cool time, etc.) limits for the various fuel types are discussed or referenced in the following paragraphs.

MTR fuel elements shall be selected and loaded in accordance with the MTR General and Preferential Loading Procedures in Section 7.1.5. The MTR plate canister, if required, shall be loaded in accordance with Section 7.1.4.1.

DIDO fuel elements shall meet the following loading conditions:

- The maximum decay heat per DIDO fuel element shall not exceed 25 W.
- The maximum decay heat load for a loaded DIDO fuel basket assembly shall not exceed 1.05 kW.
- The heat load for each DIDO fuel element shall be verified by use of cool time versus burnup (MWd/MTU) curves in Figure 7.1-8 (LEU fuel), Figure 7.1-9 (MEU fuel), and Figure 7.1-10 (HEU fuel) <u>or</u> by use of minimum cool time versus ^{235}U depletion curves in Figure 7.1-11 (generic for LEU, MEU and HEU fuels). Note that significantly lower uranium content for a loaded assembly compared to the design basis assembly may result in a loaded assembly calculated burnup higher than that included in Figures 7.1-8 through 7.1-10. Use of Figure 7.1-11 ^{235}U depletion curves is required for fuel assemblies in this category.
- An additional requirement for fuel element loading of the top module limits the heat load to 18 W per element, unless there is a spacer bolted to the underside of the closure lid, or there is sufficient fuel element hardware to ensure that axial movement of the fuel element is limited, to ensure that the active fuel region is radially shielded by the gamma shield lead layer. A lid spacer, if required, shall be as shown on NAC Drawing No. 315-40-113.

Spiral and MOATA fuel elements shall meet the content conditions specified in the Certificate of Compliance for loading into the ANSTO fuel basket assembly. Full spiral fuel loads or mixed spiral and MOATA fuel loads are authorized with separate basket modules containing the two fuel types.

The procedures for loading the NAC-LWT cask with MTR, DIDO or ANSTO fuel baskets in a dry configuration or using a dry transfer system are as follows:

1. Perform a receiving survey of the empty cask or closed ISO container and inspect for damage.
2. Position the trailer in the designated area. Set the trailer brakes and block the wheels against movement in ether direction, unless site-specific conditions require the trailer to move in conjunction with, or instead of, the overhead crane to upend the cask in Step 7 or downend the cask in Step 50.
3. Remove the roof from the ISO container, and open front and rear doors. Remove roof cross members, if installed.

   Note: Verify that the package identification number on the nameplate complies with the Certificate of Compliance.
4. Perform a Health Physics survey of the cask and adjacent surfaces of the container.

   Note: A receiving survey of the cask and transport must be performed as soon as practicable after arrival at the site to ensure compliance with 10 CFR 20, 10 CFR 71.87(i), 10 CFR 71.47, and to ensure timely reporting of any transportation noncompliance.
5. Remove the top and bottom impact limiters.
6. Remove the cask tie-down strap.
7. Using the cask lifting yoke with the lift yoke arm guides removed, engage the lifting trunnions of the front end of the cask. Raise the cask to a vertical position on the rear cask support, moving the crane and/or trailer, as required, to keep the cask engaged in the trailer rear rotation supports and the crane cable vertical. When the cask is fully vertical, block the trailer wheels, and lift the cask from the container.
8. Place the cask onto the dry loading station. Connect the cask to loading station tie-downs and tighten evenly.
9. Disengage the lifting yoke and move clear.
10. Remove the weather seal from the cask.
11. Remove the vent and drain valve port covers. Carefully inspect the O-ring seals in the side of the valve port cover. If the O-rings show any damage, replace them. Be certain that the replacement O-rings are properly installed and seated. Visually inspect the valve quick disconnect nipples and replace them, if necessary.
12. Remove closure lid bolts. Attach the lid lift slings to the closure lid. Remove the closure lid and set it on a support that is suitable for radiological control and for maintaining the cleanliness of the closure lid. Carefully inspect the Teflon O-ring seal in the underside of the closure lid. If the O-ring shows any damage, replace it. Remove the metallic O-ring and replace it with an approved spare. Be certain that the replacement O-rings are properly installed and seated. Inspect the lid bolts and replace any that are damaged.

13. Visually inspect the inner cavity for foreign material or damage. Install or verify presence of a proper drain tube including drain tube alignment ring.
14. Replace the closure lid, but not the lid bolts.
15. Attach lift slings to the transfer cask adapter. Lift for inspection.
16. Visually verify that the mating surface of the cask adapter is free from debris.
17. Carefully lower the adapter onto the cask positioning the adapter match mark lines with the cask lifting trunnions and cavity drain.
18. Attach four retention clamps over the cask trunnions.
19. Open cask adapter gate and attach lift slings to the closure lid.
20. Remove the cask closure lid and close adapter gate. Place the closure lid on an adequate support.
21. Attach lift sling to transfer cask adapter ring and carefully place over opening in transfer cask adapter.
22. Identify the fuel to be loaded into each fuel basket module. Fuel elements loaded into each basket and/or module shall comply with the approved content conditions specified in Condition 5.(b)(1) and 5.(b)(2) of CoC No. 9225. Specific guidance on fuel selection, use of loading diagrams and preferential loading procedures is provided in Section 7.1.5. Perform an independent verification of the loading diagrams and fuel loading operations per Section 7.1.5.3.

    Note: If a basket module is to be loaded with a LEU MTR fuel element having ^{235}U content >470 g (>22 g ^{235}U per plate), cell block spacers, as shown on Drawing 315-40-085, shall be installed in basket module cell positions 1, 2 and 3 to prevent inadvertent loading of more than four LEU MTR fuel elements.

    Note: For the loading of HEU MTR fuel elements having ^{235}U content >380 g, a minimum of 2.0 cm of nonfuel hardware and/or spacer plates shall be provided at both ends of the fuel element to meet criticality control analysis requirements.
23. Place the transfer cask containing the base unit onto the adapter noting the position of the match mark lines between the adapter and transfer cask.
24. Open the cask adapter gate.
25. Open the transfer cask gate.
26. Lower the fuel basket from the transfer cask into the shipping cask.
27. Disengage grapple and retract back into the transfer cask.

    Note: Grapple release can be verified by checking cable for tension.
28. Verify grapple is fully retracted.

    Note: Indication will be physical indicator attached to cable.
29. Close cask adapter gate.
30. Close transfer cask gate.

31. Repeat steps 23-30 for each intermediate basket module and for the top basket module.
32. Attach lift swing to transfer cask adapter ring and carefully remove from transfer cask adapter.
33. Attach lift swing to closure lid and position just above cask adapter gate and match lines for radial position.
34. Open the cask adapter gate.
35. Carefully lower the closure lid into position and visually verify that it is properly seated.
36. Attach lift sling to transfer cask adapter. Remove four retention clamps from the cask trunnions.
37. Carefully remove transfer cask adapter and position for subsequent decontamination.
38. Install and tighten all 12 closure bolts to 260 ± 20 ft-lb in three passes, using the sequence stamped on the lid.
39. Attach the vacuum pump to the cask vent valve.
40. Evacuate the cask cavity to ≤ 9 mm of mercury and maintain for a minimum of 15 minutes.
41. Stop the vacuum pump and monitor pressure for at least ten minutes. If pressure rise is less than 4.5 mm of mercury, the cask is adequately dried for shipment. If not, repeat Steps 39 and 40.
42. Remove the vacuum pump and backfill the cask cavity with helium to 1 atmosphere (absolute), +1, -0 psi.
43. Remove the helium gas supply line.
44. Perform the helium mass spectrometer leak test on the cask lid O-ring seal in accordance with the requirements of Section 8.1.3.1, Steps 3 through 10.
45. For standard and alternate port cover configurations, place the port covers over the vent and drain valves. Install and tighten the port cover bolts to 100 ± 10 inch-pound. Using the pressure test fixture, including a calibrated vacuum/pressure gauge with a minimum sensitivity of 0.25 psi, pressurize the annulus between the two port cover seals to 15 +1/-0 psig through the pressure test port located on the valve port cover. Observe the pressure gauge for at least 10 minutes after closing the isolation valve.

    If no drop in gas pressure is observed greater than the gauge readability, the port cover test is acceptable and meets the minimum preshipment leakage rate of 1×10^{-3} ref cm^3/sec. If the gas pressure drops, remove the valve port cover and replace the seals. Reinstall the cover and test in accordance with the requirements of Section 8.1.3.2. Repeat the test on each valve port cover.

Attention to the overall cask loading pattern allows the decay heat load of the cask to be maintained as uniform, as is practical and within CoC total heat load limits. Loading diagrams for each individual module and the complete cask assembly shall be developed and used during the basket module and cask loading operations. After the decay heat load of each of the MTR fuel elements to be loaded and transported is calculated or determined and verified, the loading and content considerations of Sections 7.1.5.1 through 7.1.5.3 shall be met or complied with to establish the final acceptable loading pattern and sequence.

7.1.5.1 General Loading Requirements

1. The maximum decay heat load per MTR fuel basket module shall not exceed 210 W and the maximum decay heat load per cask (package) shall not exceed 1.26 kW. A MTR fuel element with a decay heat greater than 120 W shall not be loaded.
2. LEU, MEU and HEU MTR fuel elements with decay heat not exceeding 30 W per element may be loaded in any basket module fuel element location in any combination.
3. HEU MTR fuel elements with decay heats exceeding 30 W shall be preferentially loaded in a basket module in decreasing decay heat order according to the Loading Diagram or Alternate Loading Diagram in Figure 7.1-1, with the highest heat load element loaded in fuel location one. Fuel elements with heat loads of up to 120 W shall only be loaded in the center fuel element location of any MTR fuel basket module. The decay heat of the fuel element in either of the two fuel element locations (i.e., number 2 or 3), in line with the center fuel element location of a MTR fuel basket module, shall not exceed 70 W.
4. LEU MTR fuel elements (or canistered fuel plates) with a ^{235}U content greater than 470 g, and not exceeding 640 g, shall only be loaded into basket positions 4, 5, 6 and 7 shown in Figure 7.1-1. In order to ensure that baskets containing the high fissile mass LEU MTR elements (>470 g ^{235}U) will not be loaded with fuel elements (or fuel plates) in basket opening positions 1, 2 and 3, a cell block spacer shall be installed in each of these three basket openings. The cell block spacer, as shown on Drawing 315-40-085, is of sufficient height and diameter to ensure that LEU MTR fuel elements are prevented from being placed in these openings. The capacity limitation of a maximum of four MTR fuel elements per module is in effect even if a single LEU MTR fuel element (or canistered fuel plates) having >470 g ^{235}U is to be loaded.
5. An MTR plate canister may be loaded into any fuel basket module fuel element location. The contents of each plate canister shall be limited to the number of fuel plates, dimensions and masses of an equivalent intact MTR fuel element.
6. MTR fuel elements with corrosion and/or mechanically damaged cladding may be loaded, provided that the total surface area of through-clad corrosion and/or mechanical damage does not exceed 2,775 cm^2 per package.

7.1.5.2 Determination of Basket Module Loading Pattern

1. Perform an evaluation of the full inventory of fuel elements to be loaded into the NAC-LWT cask(s) and develop an overall loading plan that minimizes overall dose rates to minimize general population dose and operator dose. The loading of LEU MTR fuel elements with greater than 470 g ^{235}U shall be governed by the loading restrictions in item 4 of Section 7.1.5.1, and cell block spacers shall be placed in basket loading positions 1, 2 and 3 to prevent inadvertent loading of more than four high fissile mass LEU MTR elements.

2. Select up to seven MTR fuel elements to be loaded in a basket module meeting the general loading requirements of 7.1.5.1. Identify if spacers or spacer plates are required to properly position the MTR elements axially in the basket module.

3. Rank the fuel elements in order of decreasing decay heat load from 1 to 7. (The assembly with the highest decay heat is designated number 1.)

4. Generate loading diagrams for each basket module based on Figure 7.1-1, by placing the numbered assemblies in the matching numbered basket module positions.

5. Repeat steps 1 through 4 for all of the basket modules to be loaded.

6. Independently verify the basket module loading diagrams.

7. The loading diagrams shall be used to direct the loading of the basket modules per Section 7.1.5.3.

Once the basket module loading charts are complete, they are used to direct the loading of the basket modules.

7.1.5.3 Basket Loading Procedure

1. Locate the MTR fuel element to be loaded into the basket module per the loading diagram prepared for that module type (i.e., base, intermediate or top).

2. Independently verify the element identification.

3. Load the element into the predetermined fuel basket module fuel element location using the loading diagram. Ensure spacers are installed in positions 1, 2 and 3 of any basket module containing a high fissile mass LEU MTR element.

4. Independently verify that the fuel element and spacer loading in the basket module complies with the loading diagram.

5. Repeat steps 1 through 4 until all identified fuel elements have been loaded into basket modules in compliance with the loading diagrams.

Figure 7.1-2 LEU MTR Fuel Basket Loading Guidelines for 30 W Uniform Loading

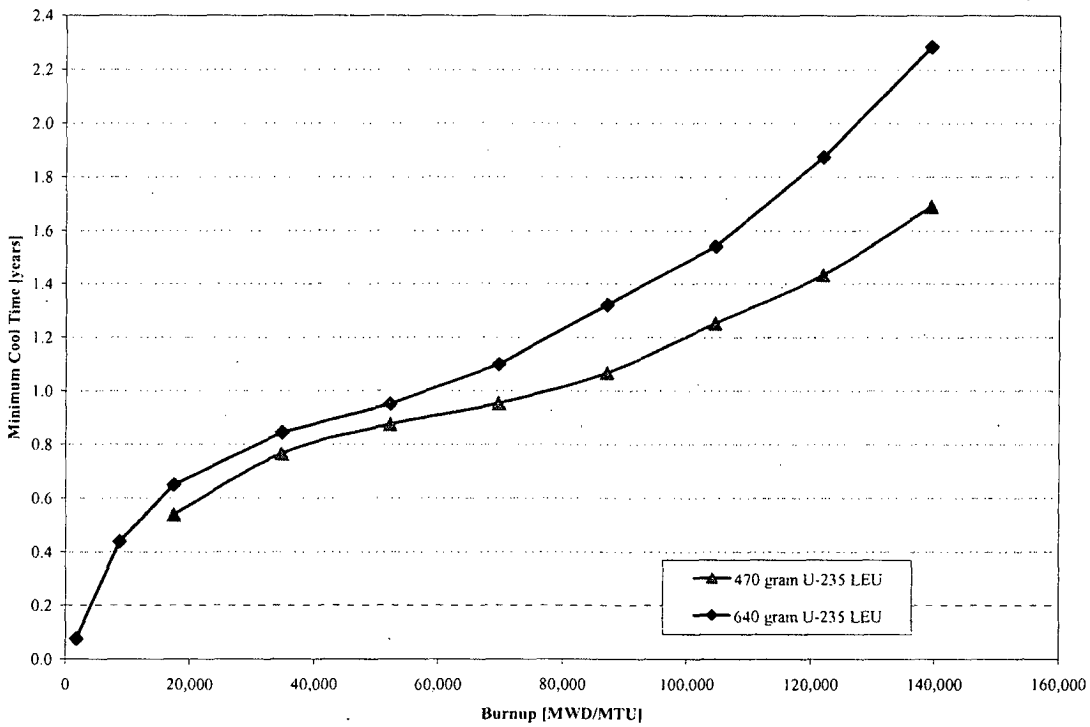
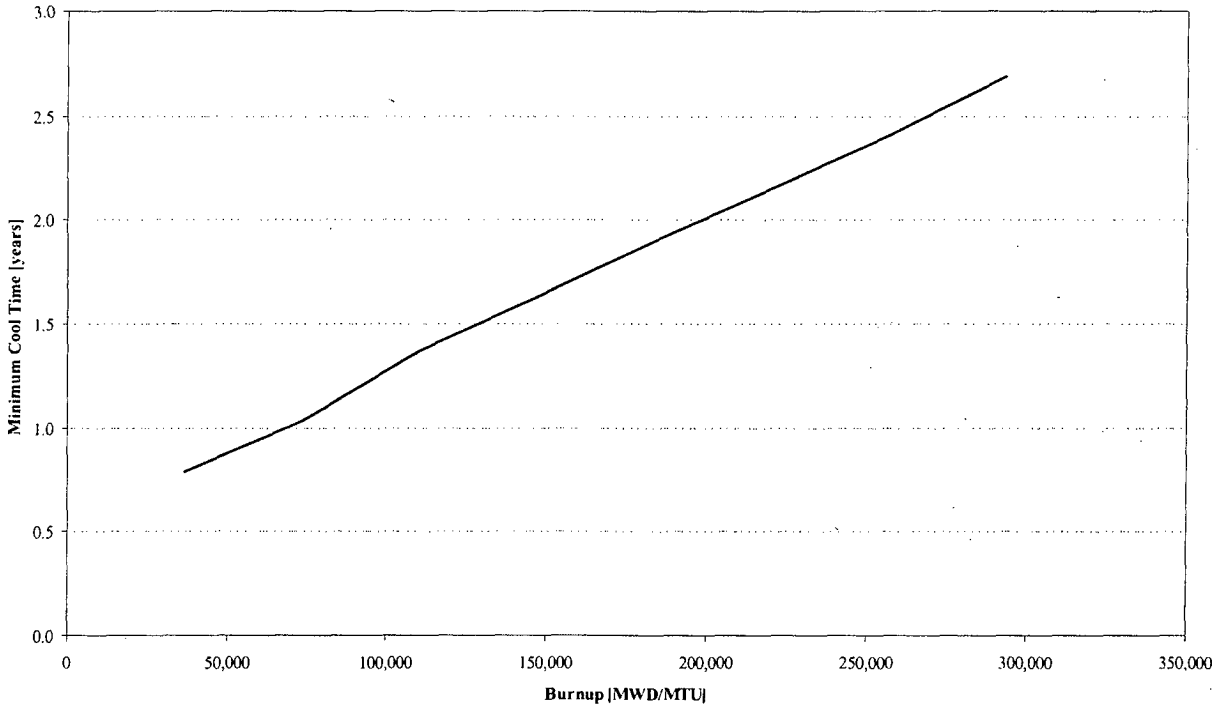
Figure 7.1-3 MEU MTR Fuel Basket Loading Guidelines for 30 W Uniform Loading