Exelon Generation
4300 Winfield Road
Warrenville, IL 60555

www.exeloncorp.com

Exelon Nuclear

RS-11-015

10 CFR 50.55a

February 1, 2011

U. S. Nuclear Regulatory Commission
ATTN: Document Control Desk
Washington, DC 20555-0001

Clinton Power Station, Unit 1
Facility Operating License No. NPF-62
NRC Docket No. 50-461

Subject: Response to Request for Additional Information Related to Relief Requests

References:

1. Letter from Jeffrey L. Hansen (Exelon Generation Company, LLC) to U. S. NRC, "Second Inservice Inspection Interval Relief Requests 4216, 4217, 4218, 4219, 4220, 4221, and 4222," dated July 1, 2010

2. Letter from U. S. NRC to M. J. Pacilio (Exelon Generation Company, LLC), "Clinton Power Station, Unit No. 1 - Request for Additional Information Related to Second Inservice Inspection Interval Relief Requests 4216, 4217, 4218, 4219, 4220, 4221, and 4222 (TAC Nos. ME4183, ME4184, ME4185, ME4186, ME4187, ME4188, and ME4189)," dated December 21, 2010

In Reference 1, Exelon Generation Company, LLC (EGC) requested approval of relief requests associated with the second 10-year Inservice Inspection (ISI) Program Interval at Clinton Power Station, Unit 1 (CPS).

During its review of Reference 1, the NRC found that additional information was required to support its review as discussed in Reference 2. The requested information is provided in the attachment to this letter.

There are no regulatory commitments contained within this letter.

Should you have any questions concerning this letter, or require additional information, please contact Mitchel A. Mathews at (630) 657-2819.

Respectfully,

Jeffrey L. Hansen
Manager – Licensing and Regulatory Affairs
Exelon Generation Company, LLC

Attachment: Response to NRC Request for Additional Information

Generic Request Pertaining to RR Nos. 4216 through 4222

1. ***Please confirm that all examinations included in [relief request] RR Nos. 4216 through 4222 have been completed in full. If any have not been completed in full, please note exactly what has been completed.***

   Exelon Generating Company, LLC (EGC) Response

   All examinations included in Relief Request (RR) Nos. 4216 through 4222 have been completed to the maximum degree possible as permissible by the limitations/interferences described in the applicable relief requests.

RR No. 4216 - Surface Examination of Residual Heat Removal Pump A Casing Weld

2. ***The illustrations provided in the submittal do not make clear how the instrument line obstructs the required examination. Please include a visual representation that clearly illustrates the obstruction.***

   EGC Response

   Non-destructive examination (NDE) report R00-011 states that for weld RHR-A-2, the weld length is 100 inches with no inspection of 13 inches (i.e., from 58.75 inches to 71.75 inches) due to an instrument lined welded to the piping weld. This weld is the "A" residual heat removal (RHR) pump shell-to-upper-flange weld; see Figures 1 and 2 below. The obstruction is caused by a combination of the A RHR pump suction vent line, which is welded to the RHR-A-2 weld with a fillet weld around the circumference of the nozzle, and the 1A seal cooler, which is up against the shell-to-upper-flange weld. This fillet weld and the associated seal cooler are obstructing the RHR flange weld from being inspected with the surface examination method. Figures 1 and 2 below provide a visual representation that clearly illustrates the obstruction.

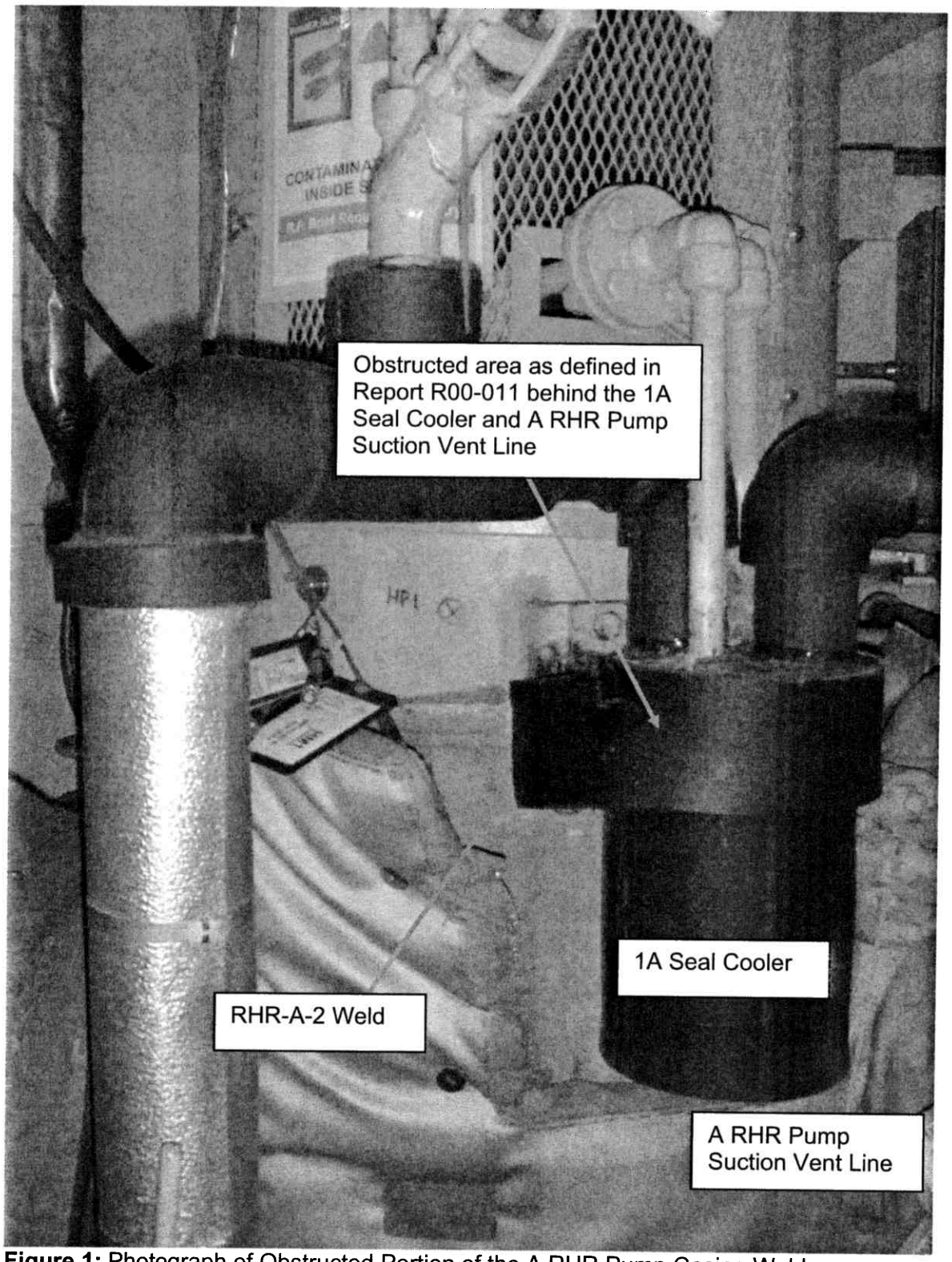

Figure 1: Photograph of Obstructed Portion of the A RHR Pump Casing Weld

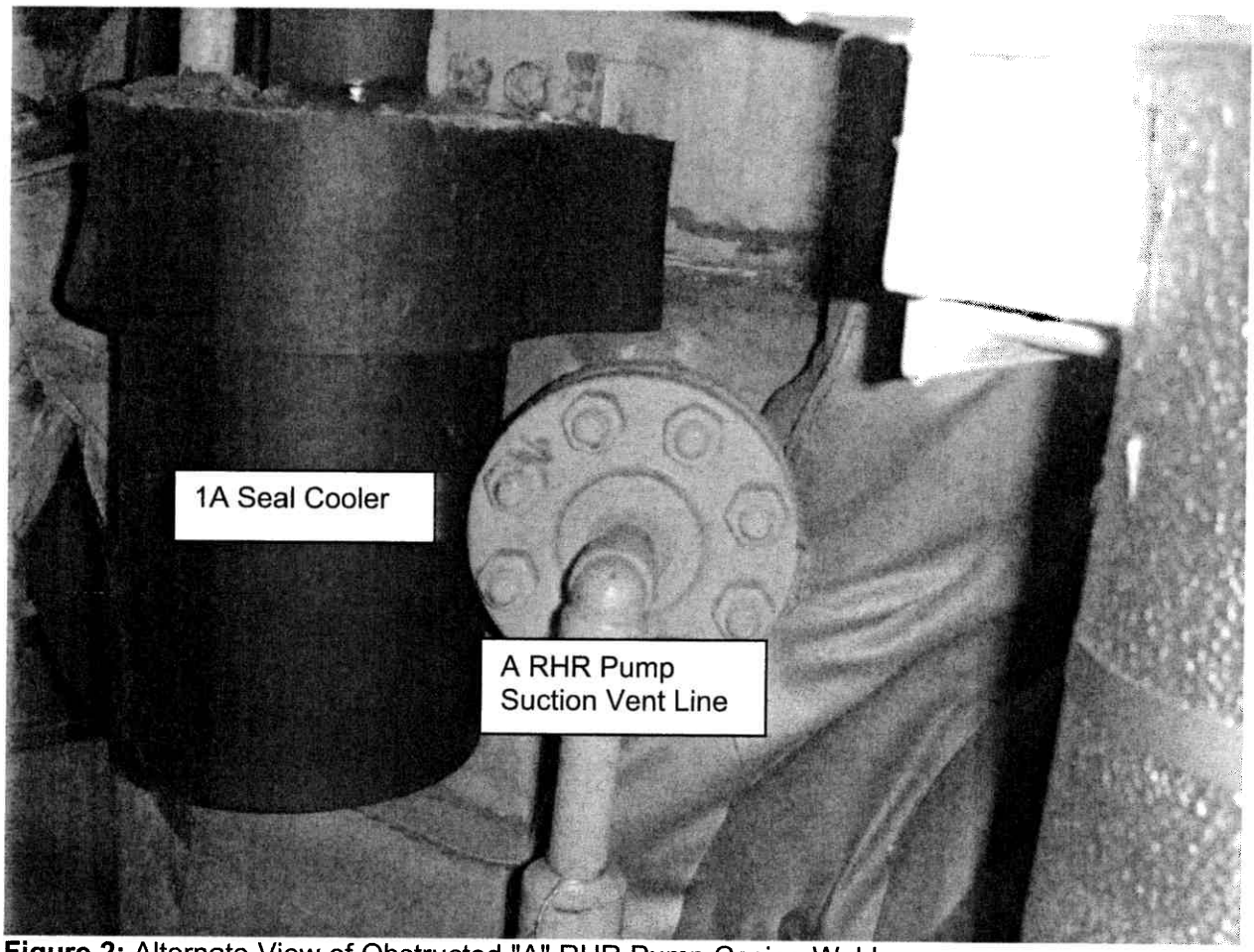

Figure 2: Alternate View of Obstructed "A" RHR Pump Casing Weld

3. ***It was noted that to increase inspection coverage would require staff at Clinton Power Station, Unit No.1 to "cut out the noted instrument line and weld it back." However, it was not made clear if alternate modes of inspection, such as miniaturized cameras, were used to attempt to obtain greater coverage despite the blocking instrument line. Please discuss the efforts used to maximize inspection coverage without plant modification and why these efforts did, or did not, lead to increased coverage.***

   EGC Response

   A review was performed to determine if other techniques such as visual examination could be performed to inspect the obstructed 13 inches of weld RHR-A-2. No alternate techniques could be used to exam the obstructed area due to the fillet weld and the clearances associated with the seal cooler without performing a plant modification and removing either the seal cooler and/or the suction vent line.

RR No. 4217 - Reactor Pressure Vessel (RPV) Head-to-Flange Weld

4. ***The submittal did not identify how the variation with configuration/geometry of RPV head flange across the length of the weld produced such varied coverage percentages. Can these coverage differences be contributed entirely to the near field effects? Please specify exactly what variations along the weld length reduced the weld coverage for this weld.***

EGC Response

The inspection of the reactor top head to flange weld, CH-C-2, was separated into three segments with one segment being examined in 2002, 2006, and 2010. General Electric (GE)-Hitachi was the vendor performing all three of the inspections.

Report 02-002 from 2002 utilized procedure UT-EXLN-300, Version 4, "Procedure for Manual Examination of Reactor Vessel Assembly Welds," which was written to meet the requirements listed in NRC Regulatory Guide (RG) 1.150, "Ultrasonic Testing of Reactor Vessel Welds During Preservice and Inservice Examinations," and American Society of Mechanical Engineers (ASME) Section XI-1989 Edition. The inspection was performed and coverage calculated as 53.8% from the 0, 45, and 60 degree angles utilized to inspect from 0 to 120 degrees as shown in Figure 3 below.

Report 06-062 from 2006 utilized procedure GE-UT-300, Version 10, "Procedure for Manual Examination of Reactor Vessel Assembly Welds in Accordance with PDI," which was written to meet ASME Section XI, Appendix VIII requirements. The inspection was performed and coverage calculated as 79.5% from the 60 degree "Near Surface" and "Full Volume" techniques demonstrated for Appendix VIII and shown in Figure 4 below.

Report C1R12-046 from 2010 utilized procedure GE-UT-300 Version 10 written to meet ASME Section XI, Appendix VIII requirements. The inspection was performed and coverage calculated as 84% from the 60 degree "Near Surface" and "Full Volume" techniques demonstrated for Appendix VIII and shown in Figure 5 below. The change in coverage from 79.5% in 2006 to 84% in 2010 was due to the difference in defining the process used to calculate the coverage and providing physical measurements of transducer location versus weld location to give better definition to the calculations performed.

After reviewing all three reports there is no configuration or geometry changed that affected the coverage percentages. The differences were due to changes in the examination process employed (i.e., using Appendix VIII of the ASME Code techniques) and coverage calculation methodology.

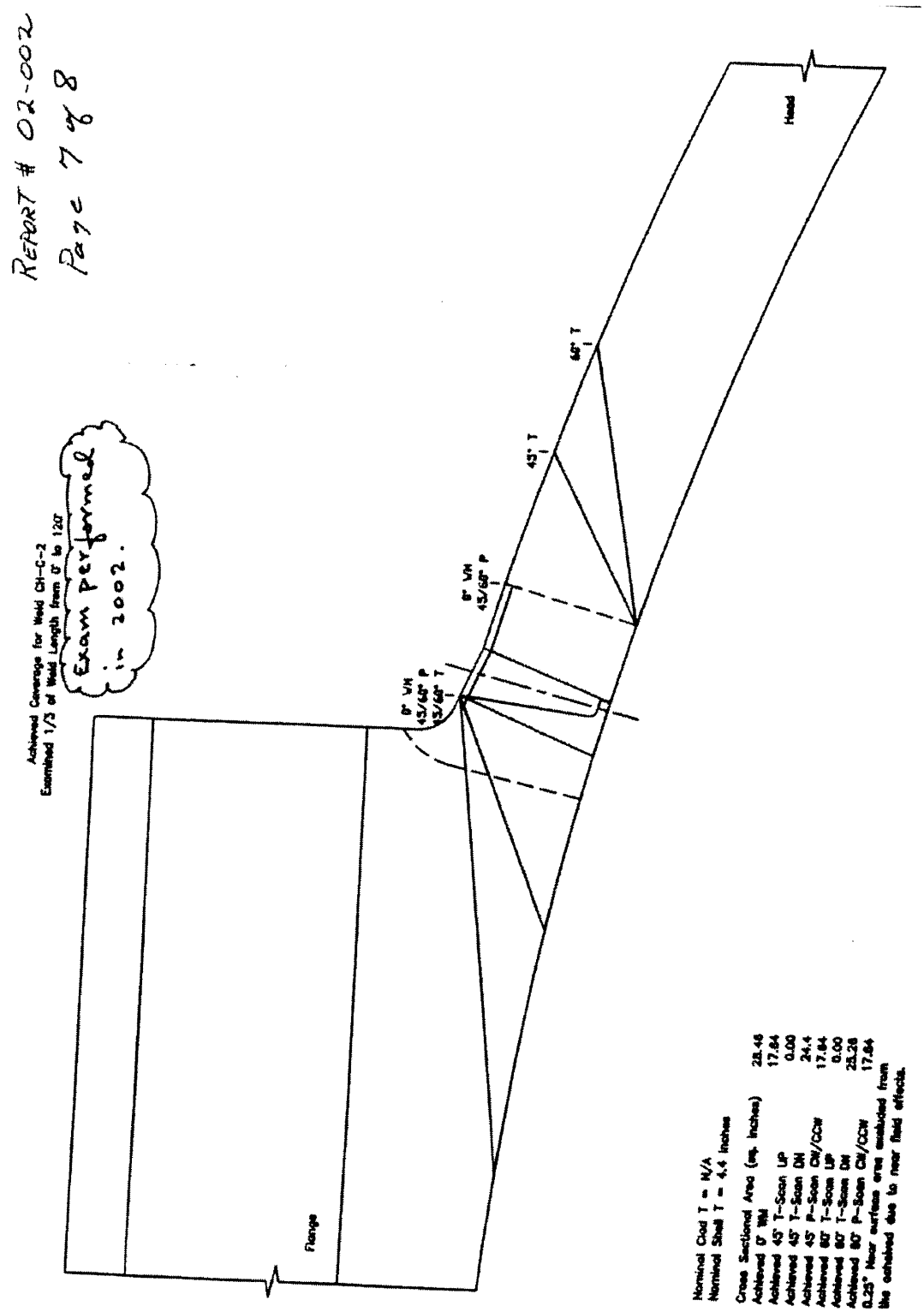

Figure 3: Reactor Pressure Vessel (RPV) Head-to-Flange Weld

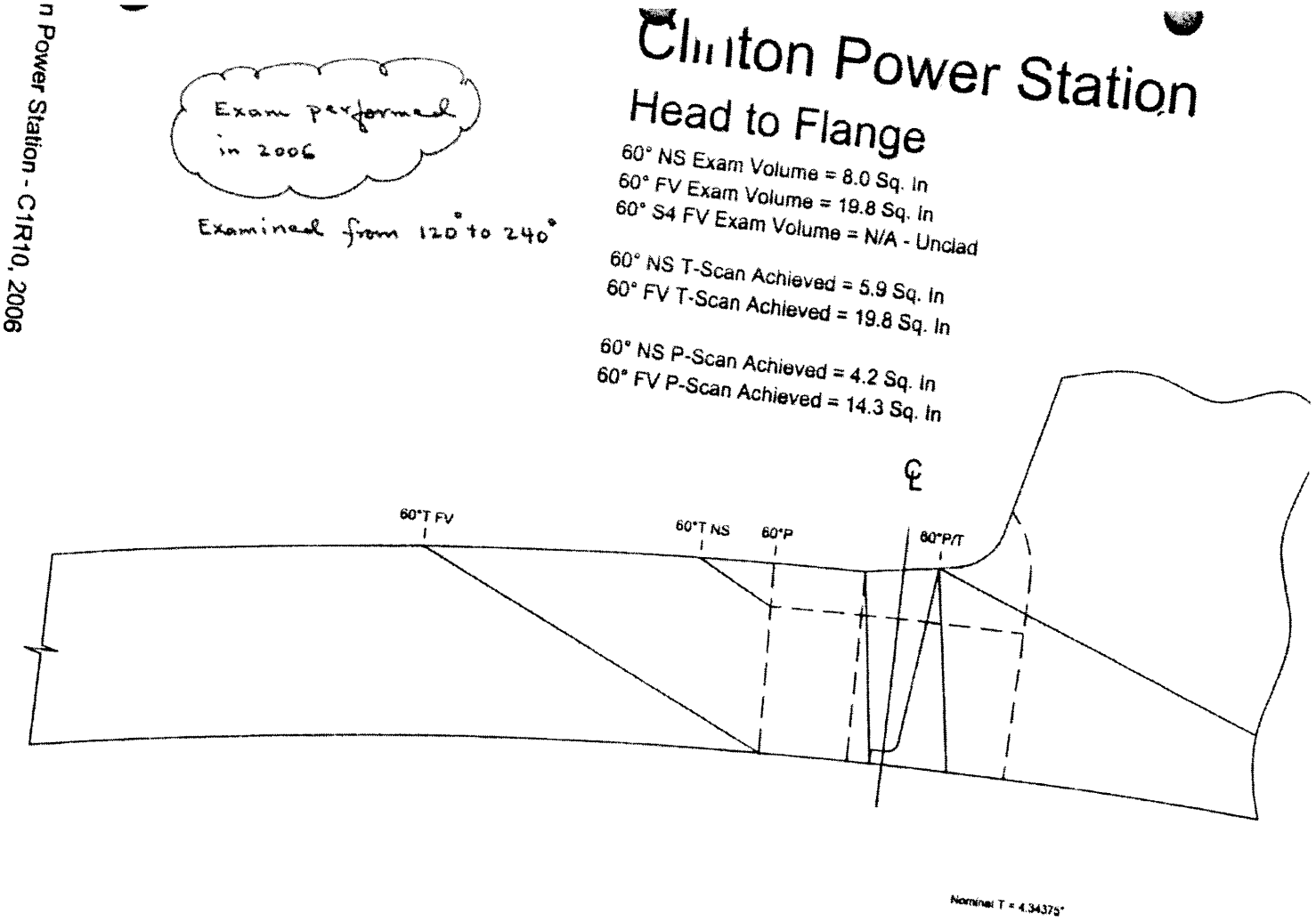

n Power Station - C1R10, 2006

Figure 4: RPV Head-to-Flange Weld

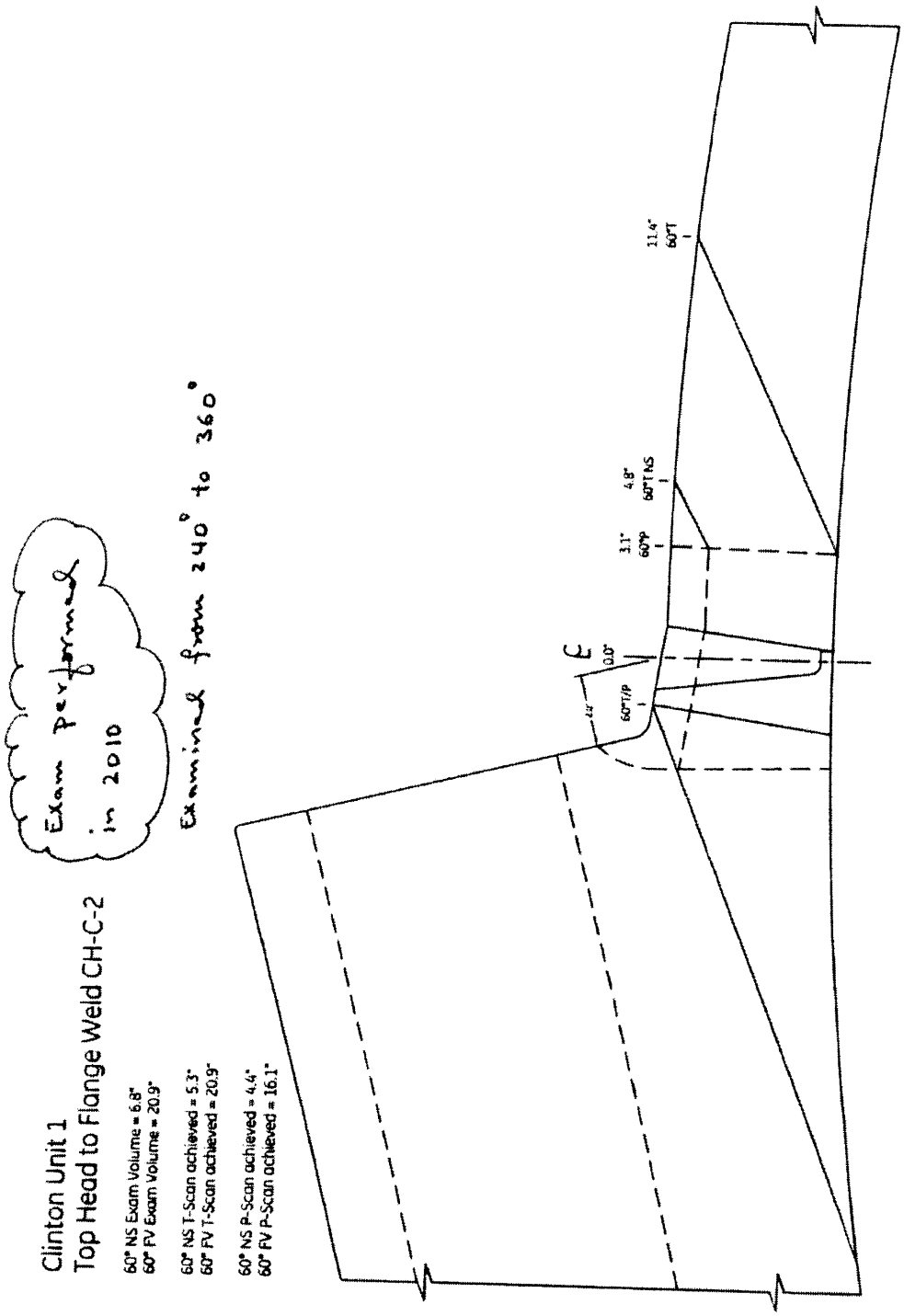

Figure 5: RPV Head-to-Flange Weld

5. ***Please explain why the near field effects are problematic in only one-third of the weld length.***

EGC Response

The near field effect was only noted on report 02-002 as being problematic in the examination from 0 to 120 degrees. This 2002 examination was performed in accordance with the 1989 Edition of ASME Section XI and RG 1.150. The techniques utilized during 2002 did not have a process to demonstrate the ability of the equipment to see near surface flaws. The remaining 240 degrees were examined utilizing equipment and techniques demonstrated in accordance with Appendix VIII of the ASME Code for near surface examinations.

RR No. 4218 - RPV Shell-to-Flange Weld

6. ***There is no clear identification of how the RPV shell flange configuration/geometry varies through the length of the weld to produce such varied coverage percentages. Can these coverage differences be contributed entirely to the near field effects? Please specify exactly what variations reduced the weld coverage for this weld.***

EGC Response

The inspection of RPV-C5, RPV Vessel to Flange weld was separated into two segments with one half being examined in 2002 and the other in 2010. GE-Hitachi was the vendor performing both of the inspections.

Report 02-003 from 2002 utilized procedure UT-EXLN-300, Version 4, which was written to meet the requirements in accordance with RG 1.150 and ASME Section XI-1989 Edition. The inspection was performed and coverage calculated to be 52.2% from the 0, 45, and 60 degree angles utilized to inspect from 0 to 180 degrees as shown in Figure 6 below.

Report C1R12-061 from 2010 utilized procedure GE-UT-300 Version 10 which was written to meet ASME Section XI, Appendix VIII requirements. The inspection was performed and coverage calculated to be 75% from the 60 degree "Near Surface" and "Full Volume" techniques demonstrated for Appendix VIII and shown in Figure 7 below.

After reviewing both reports there is no configuration or geometry changed that affected the coverage percentages. The differences were due to changes in the examination process employed (i.e., using Appendix VIII of the ASME Code techniques) and coverage calculation methodology.

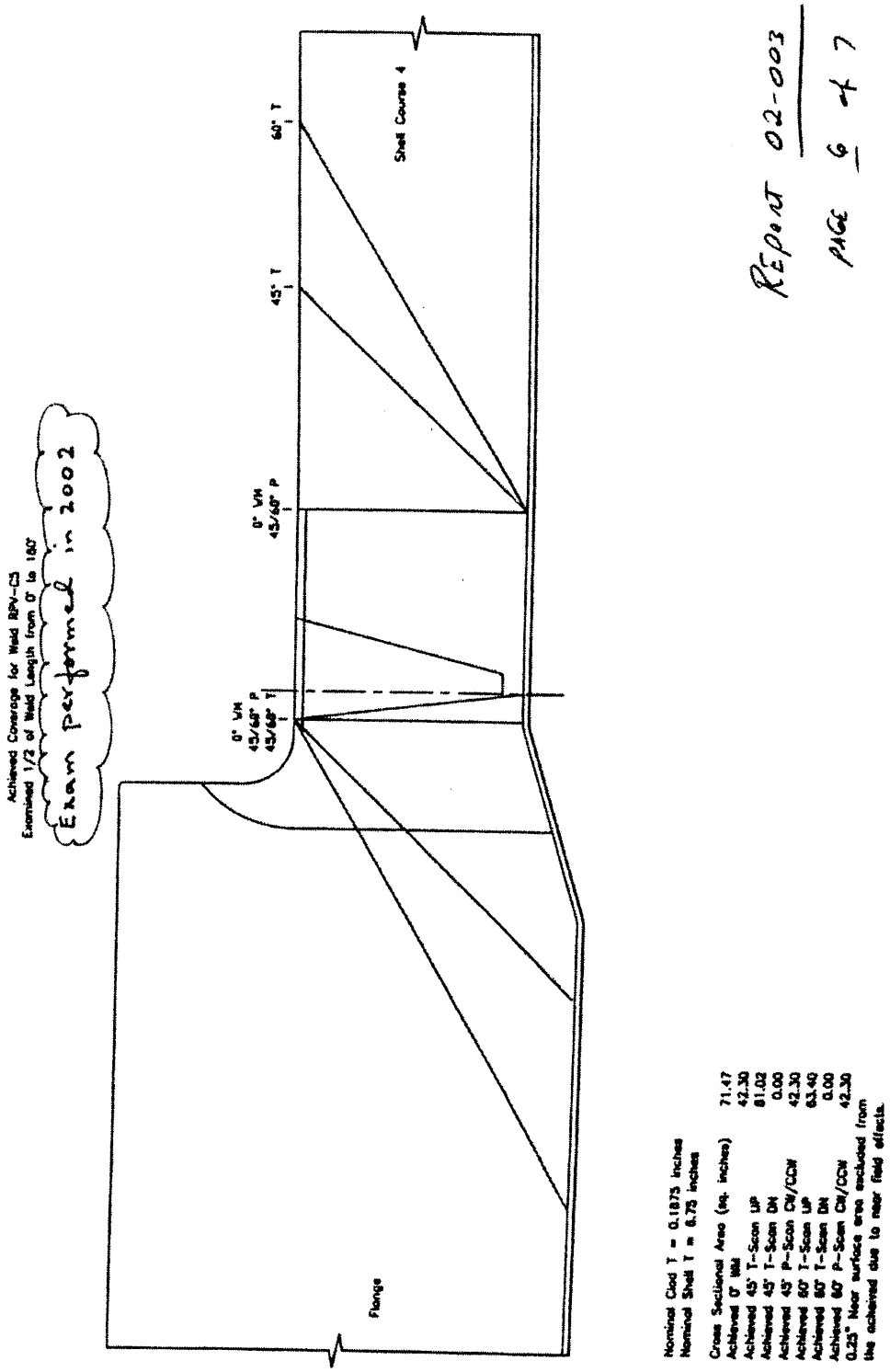

Figure 6: RPV Shell-to-Flange Weld

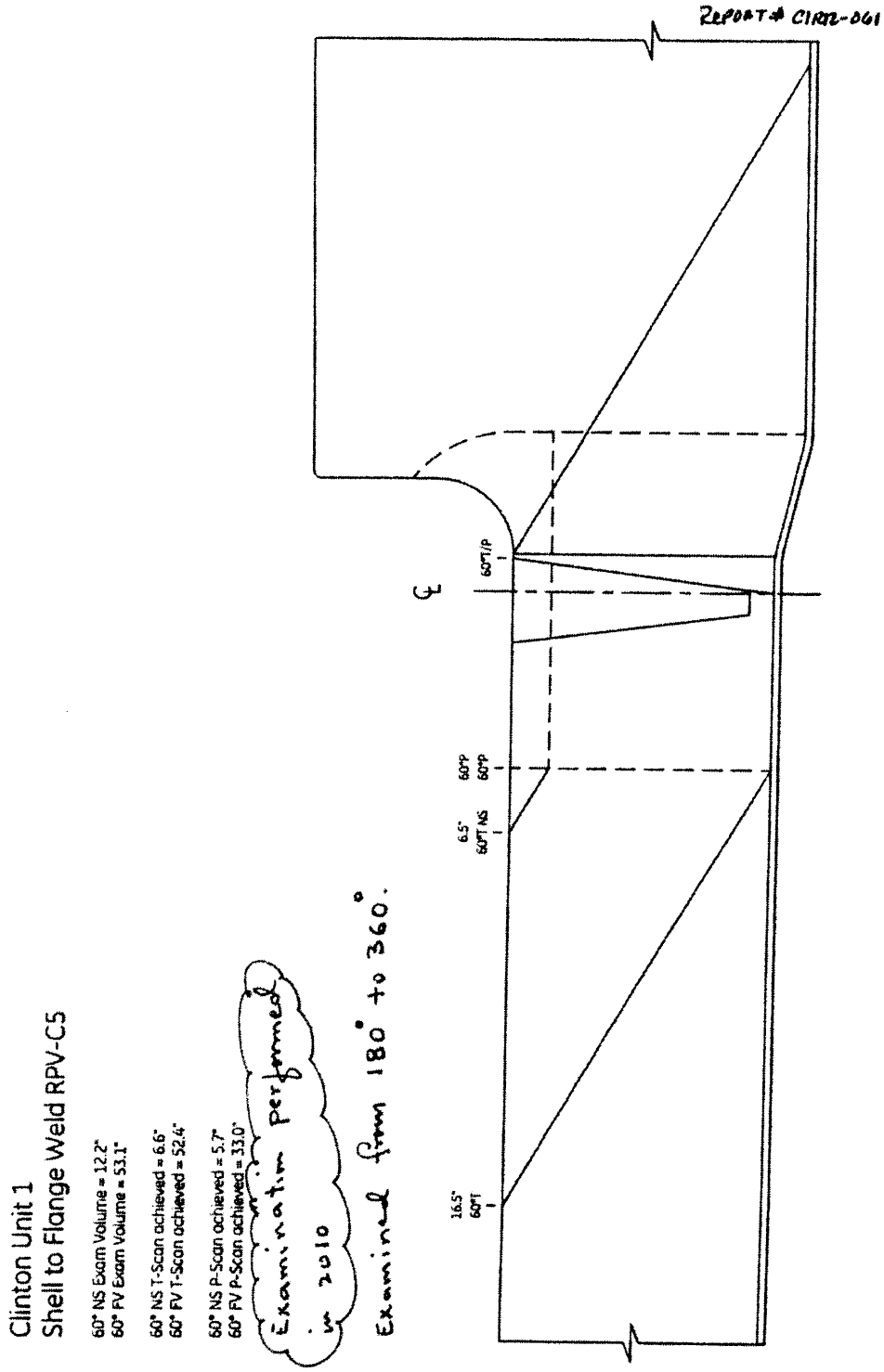

Figure 7: RPV Shell-to-Flange Weld

7. ***Please explain why the near field effects are problematic in only one-third of the weld length.***

EGC Response

The near field effect was only noted on report 02-003 as being problematic in the examination from 0 to 120 degrees. This 2002 examination was performed in accordance with the 1989 Edition of ASME Section XI and RG 1.150. The techniques utilized during 2002 did not have a process to demonstrate the ability of the equipment to see near surface flaws. The remaining 240 degrees were examined utilizing equipment and techniques demonstrated in accordance with Appendix VIII of the ASME Code for near surface examinations.

RR No. 4219 - RPV Nozzle-to-Shell Welds

8. ***No clear identification of how the RPV nozzle-to-shell welds vary to produce the coverage percentages is presented. Please specify what specific variations reduce the weld coverage for each of these welds below 90 percent.***

EGC Response

- **Weld N1B** – Automated/manual Appendix VIII qualified UT inspection performed in 2006 of the 20 inch diameter N1B reactor recirculation outlet nozzle. The variation that reduces the weld coverage can be attributed to the weld length as determined by the nozzle diameter and the curvature or radius where the nozzle and RPV shell meet, limiting the scanning of the transducer. Coverage equaled 82.7%. See Figures 8 and 9 below.

- **Weld N2B** – Automated Appendix VIII qualified UT inspection performed in 2006 of the 10 inch diameter N2B reactor recirculation inlet nozzle. The variation that reduces the weld coverage can be attributed to the weld length as determined by the nozzle diameter and the curvature or radius where the nozzle and RPV shell meet, limiting the scanning of the transducer. Coverage equaled 81.1%. See Figures 10 and 11 below.

- **Weld N2C** – Automated Appendix VIII qualified UT inspection performed in 2006 of the 10 inch diameter N2C reactor recirculation inlet nozzle. The variation that reduces the weld coverage can be attributed to the weld length as determined by the nozzle diameter and the curvature or radius where the nozzle and RPV shell meet, limiting the scanning of the transducer and the proximity of the N9A nozzle. Coverage equaled 80.6%. See Figures 12, 13, and 14 below.

- **Weld N2D** – Automated Appendix VIII qualified UT inspection performed in 2006 of the 10 inch diameter N2D reactor recirculation inlet nozzle. The variation that reduces the weld coverage can be attributed to the weld length as determined by the nozzle diameter and the curvature or radius where the nozzle and RPV shell meet, limiting the scanning of the transducer and the proximity of the N9A nozzle. Coverage equaled 80.7%. See Figures 15, 16, and 17 below.

- **Weld N2E** – Automated Appendix VIII qualified UT inspection performed in 2006 of the 10 inch diameter N2E reactor recirculation inlet nozzle. The variation that reduces the weld coverage can be attributed to the weld length as determined by the nozzle diameter and the curvature or radius where the nozzle and RPV shell meet, limiting the scanning of the transducer. Coverage equaled 81.0%. See Figures 18 and 19 below.

- **Weld N2F** – Automated UT inspection performed in 2002 of the 10 inch diameter N2F reactor recirculation inlet nozzle in accordance with RG 1.150 and ASME Section XI-1989 Edition. The variation that reduces the weld coverage can be attributed to the process used to inspect (i.e., Appendix VIII qualification versus using the 0, 45, and 60 degree angles), the weld length as determined by the nozzle diameter and the curvature or radius where the nozzle and RPV Shell meet, limiting the scanning of the transducer. Coverage equaled 65.3% including no credit for the initial 0.25 inches due to near field effects. See Figures 20 and 21 below.

- **Weld N2G** – Automated UT inspection performed in 2002 of the 10 inch diameter N2G reactor recirculation inlet nozzle in accordance with RG 1.150 and ASME Section XI 1989 Edition. The variation that reduces the weld coverage can be attributed to the process used to inspect (i.e., Appendix VIII qualification versus using the 0, 45, and 60 degree angles), the weld length as determined by the nozzle diameter and the curvature or radius where the nozzle and RPV shell meet, limiting the scanning of the transducer. Coverage equaled 65.3% including no credit for the initial 0.25" due to near field effects. See Figures 22 and 23 below.

- **Weld N3A** – Automated UT inspection performed in 2002 of the 24 inch diameter N3A main steam outlet nozzle in accordance with RG 1.150 and ASME Section XI 1989 Edition. The variation that reduces the weld coverage can be attributed to the process used to inspect (i.e., Appendix VIII qualification versus using the 0, 45, and 60 degree angles), the weld length as determined by the nozzle diameter and the curvature or radius where the nozzle and RPV shell meet, limiting the scanning of the transducer. Coverage equaled 59.0% including no credit for the initial 0.25 inches due to near field effects. See Figures 24 and 25 below.

- **Weld N3C** – Automated UT inspection performed in 2002 of the 24 inch diameter N3C main steam outlet nozzle in accordance with RG 1.150 and ASME Section XI-1989 Edition. The variation that reduces the weld coverage can be attributed to the process used to inspect (i.e., Appendix VIII qualification versus using the 0, 45, and 60 degree angles), the weld length as determined by the nozzle diameter and the curvature or radius where the nozzle and RPV shell meet, limiting the scanning of the transducer. Coverage equaled 59.0% including no credit for the initial 0.25 inches due to near field effects. See Figures 26 and 27 below.

- **Weld N4A** – Automated UT inspection performed in 2002 of the 12 inch diameter N4A feedwater nozzle in accordance with RG 1.150 and ASME Section XI-1989 Edition. The variation that reduces the weld coverage can be attributed to the process used to inspect (i.e., Appendix VIII qualification versus using the 0, 45, and 60 degree angles), the weld length as determined by the nozzle diameter and the curvature or radius where the

nozzle and RPV shell meet, limiting the scanning of the transducer. Coverage equaled 65.6%. See Figures 28 and 29 below.

- **Weld N4B** – Automated Appendix VIII qualified UT inspection performed in 2010 of the 12 inch diameter N4B feedwater nozzle. The variation that reduces the weld coverage can be attributed to the weld length as determined by the nozzle diameter and the curvature or radius where the nozzle and RPV shell meet, limiting the scanning of the transducer. Coverage equaled 78.5%. See Figures 30 and 31 below.

- **Weld N4C** – Automated Appendix VIII qualified UT inspection performed in 2010 of the 12 inch diameter N4C feedwater nozzle. The variation that reduces the weld coverage can be attributed to the weld length as determined by the nozzle diameter and the curvature or radius where the nozzle and RPV shell meet, limiting the scanning of the transducer. Coverage equaled 78.5%. See Figures 32 and 33 below.

- **Weld N4D** – Automated UT inspection performed in 2002 of the 12 inch diameter N4D feedwater nozzle in accordance with Reg. Guide 1.150 and ASME Section XI 1989 Edition. The variation that reduces the weld coverage can be attributed to the process used to inspect (i.e., Appendix VIII qualification versus using the 0, 45, and 60 degree angles), the weld length as determined by the nozzle diameter and the curvature or radius where the nozzle and RPV shell meet, limiting the scanning of the transducer. Coverage equaled 65.6%. See Figures 34 and 35 below.

- **Weld N5A** – Automated UT inspection performed in 2002 of the 12 inch diameter N5A core spray nozzle in accordance with RG 1.150 and ASME Section XI-1989 Edition. The variation that reduces the weld coverage can be attributed to the process used to inspect (i.e., Appendix VIII qualification versus using the 0, 45, and 60 degree angles), the weld length as determined by the nozzle diameter and the curvature or radius where the nozzle and RPV shell meet, limiting the scanning of the transducer. Coverage equaled 56.5%. See Figures 36 and 37 below.

- **Weld N6B** – Automated Appendix VIII qualified UT inspection performed in 2010 of the 10 inch diameter N6B RHR nozzle. The variation that reduces the weld coverage can be attributed to the weld length as determined by the nozzle diameter and the curvature or radius where the nozzle and RPV shell meet, limiting the scanning of the transducer. Coverage equaled 77.9%. See Figures 38 and 39 below.

- **Weld N7** – Manual UT inspection performed in 2000 of the 6 inch diameter N7 reactor head vent line nozzle in accordance with RG 1.150 and ASME Section XI 1989 Edition. The variation that reduces the weld coverage can be attributed to the process used to inspect (i.e., Appendix VIII qualification versus using the 0, 45, and 60 degree angles), the weld length as determined by the nozzle diameter and the curvature or radius where the nozzle and RPV shell meet, limiting the scanning of the transducer. Coverage equaled 66.3%. See Figure 40 below.

- **Weld N8** – Manual Appendix VIII qualified UT inspection performed in 2008 of the 6 inch diameter N8 spare nozzle. The variation that reduces the weld coverage can be attributed to the weld length as determined by the nozzle diameter and the curvature or

radius where the nozzle and RPV shell meet, limiting the scanning of the transducer. Coverage equaled 66%. See Figure 41 below.

- **Weld N9A** – Manual UT inspection performed in 2002 of the 4 inch diameter N9A jet pump instrument nozzle in accordance with RG 1.150 and ASME Section XI-1989 Edition. The variation that reduces the weld coverage can be attributed to the process used to inspect (i.e., Appendix VIII qualification versus using the 0, 45, and 60 degree angles), the weld length as determined by the nozzle diameter and the curvature or radius where the nozzle and RPV shell meet, limiting the scanning of the transducer. Coverage equaled 55.7% including no credit for the initial 0.25 inches due to near field effects. See Figures 42 and 43 below.

- **Weld N10** - Manual Appendix VIII qualified UT inspection performed in 2010 of the 3 inch diameter N10 control rod drive nozzle. The variation that reduces the weld coverage can be attributed to the weld length as determined by the nozzle diameter and the curvature or radius where the nozzle and RPV shell meet, limiting the scanning of the transducer. Coverage equaled 84.9%. See Figure 44 below.

- **Weld N16** – Manual Appendix VIII qualified UT inspection performed in 2010 of the 8 inch diameter N16 vibration instrumentation nozzle. The variation that reduces the weld coverage can be attributed to the weld length as determined by the nozzle diameter and the curvature or radius where the nozzle and RPV shell meet, limiting the scanning of the transducer. Coverage equaled 86.1%. See Figures 45, 46, and 47 below.

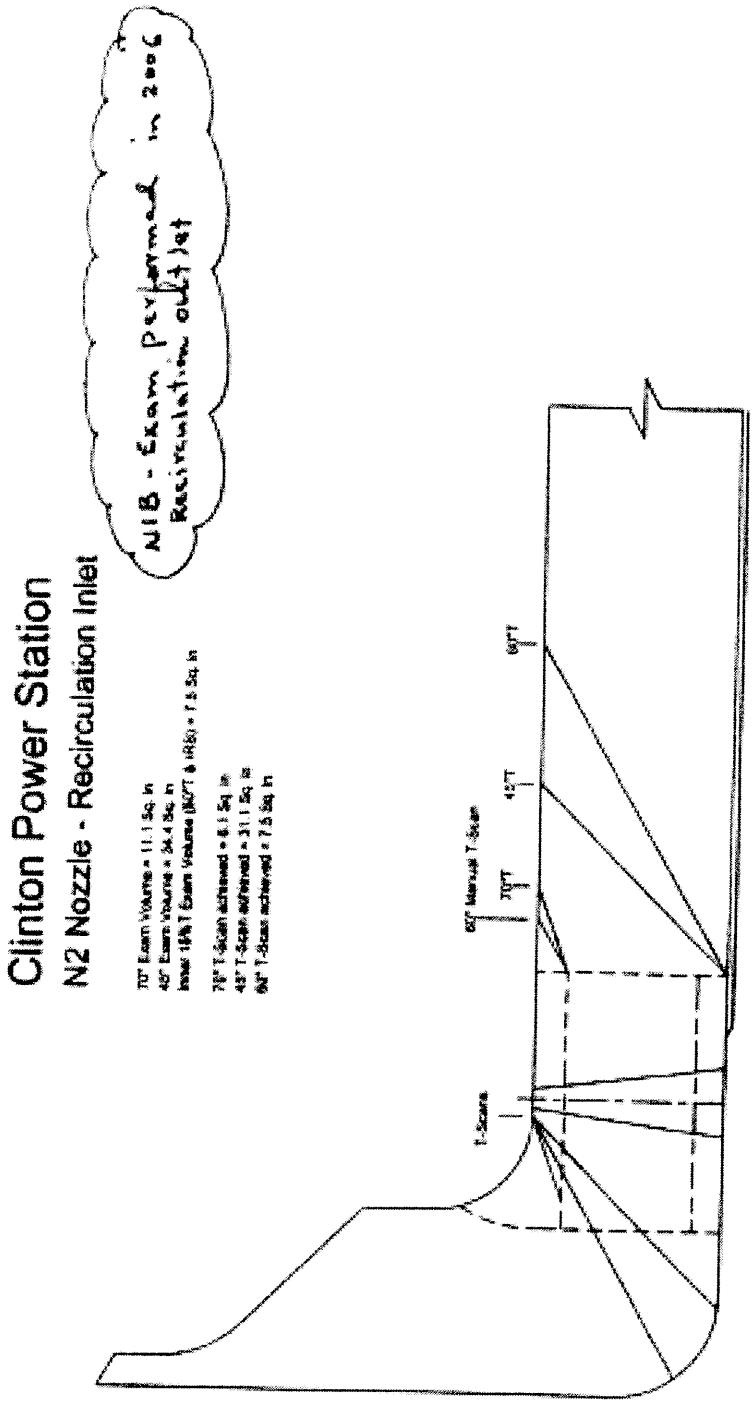

Figure 8: Weld N1B Exam Coverage

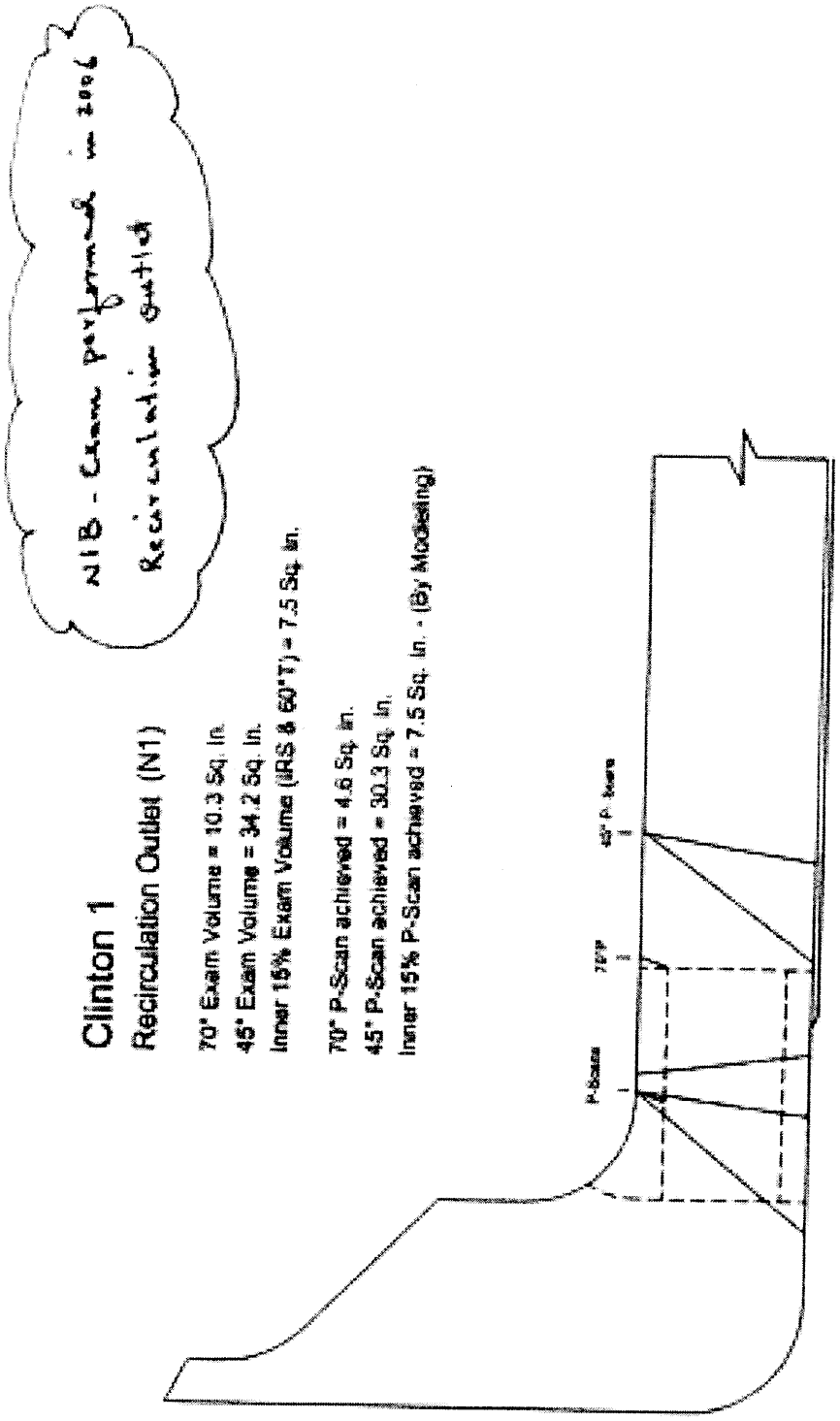

Figure 9: Weld N1B Exam Coverage

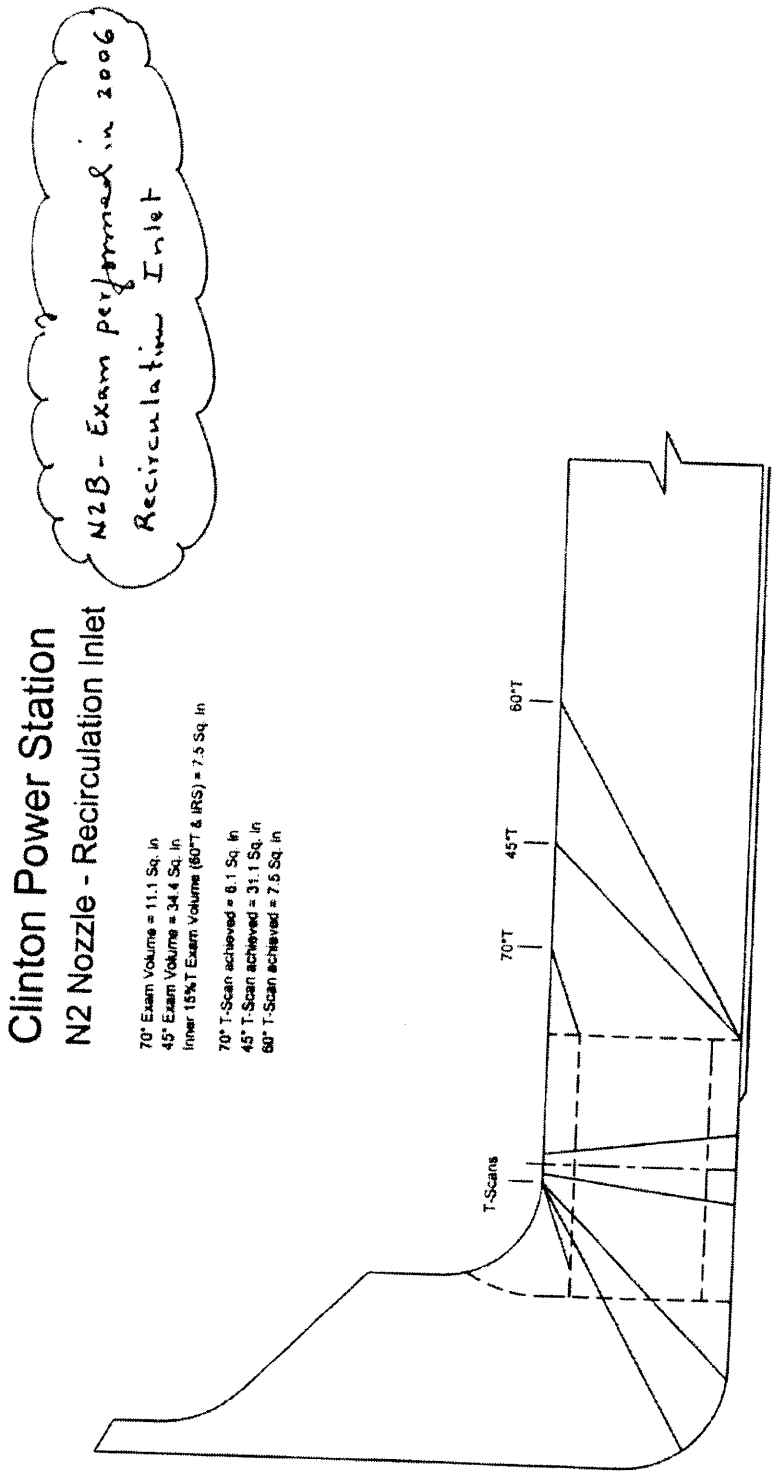

Figure 10: Weld N2B Exam Coverage

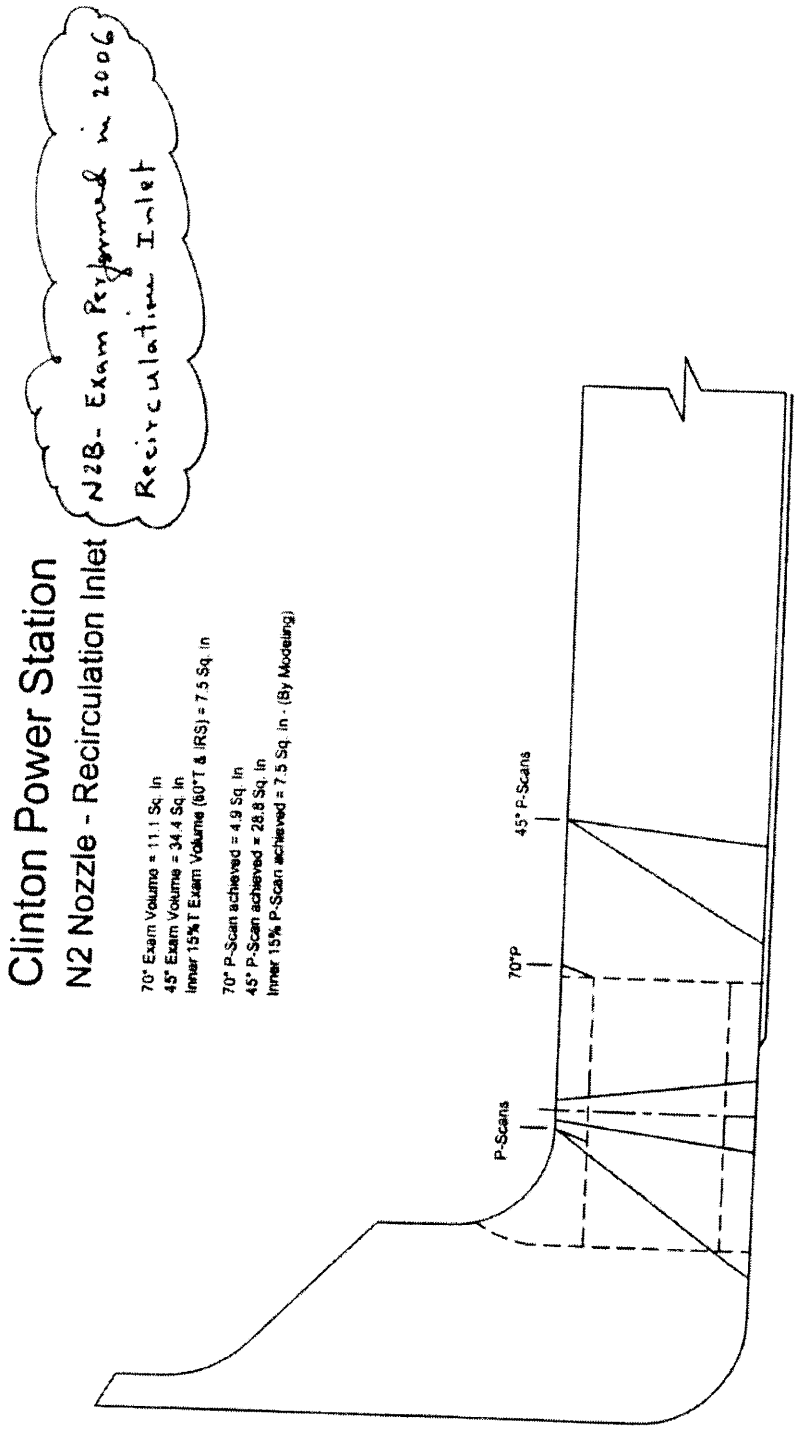

Figure 11: Weld N2B Exam Coverage

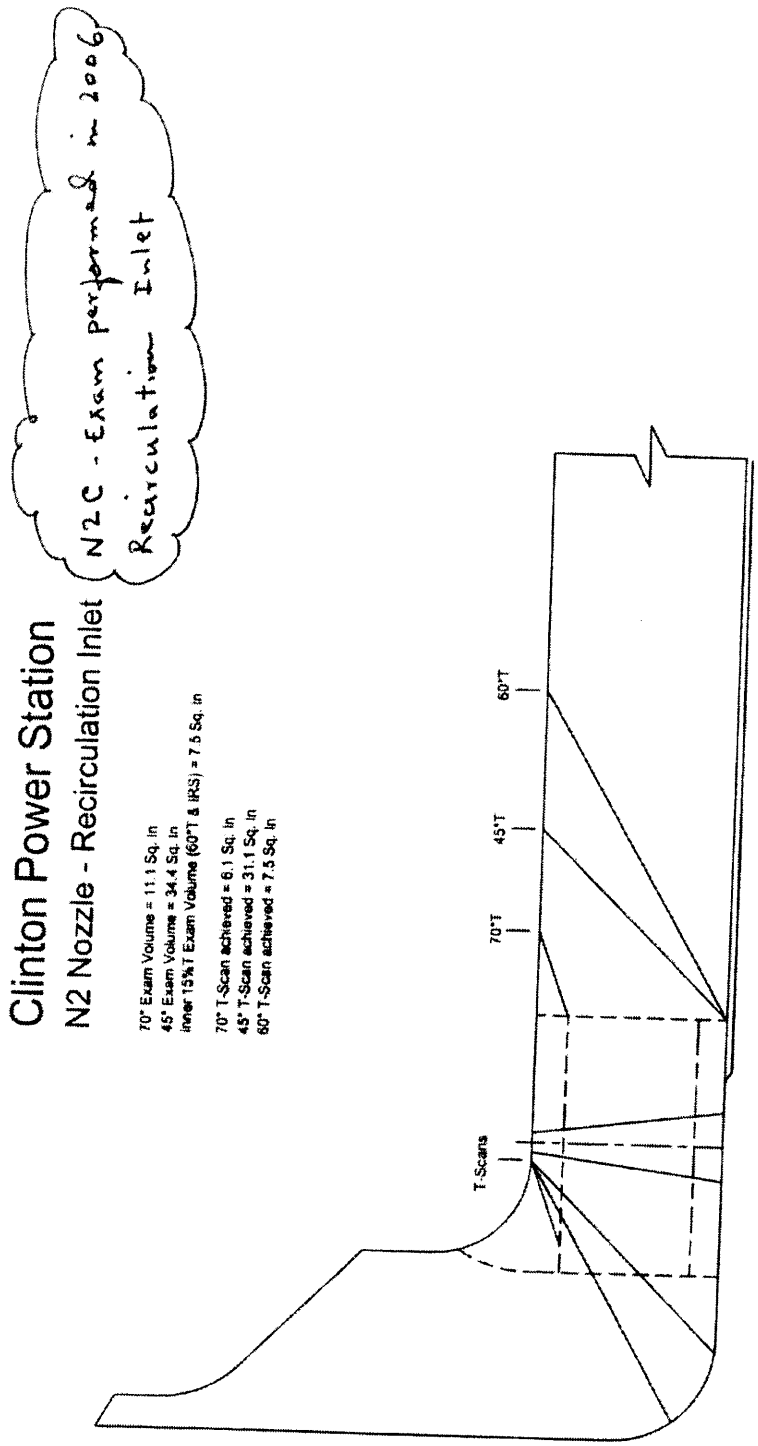

Figure 12: Weld N2C Exam Coverage

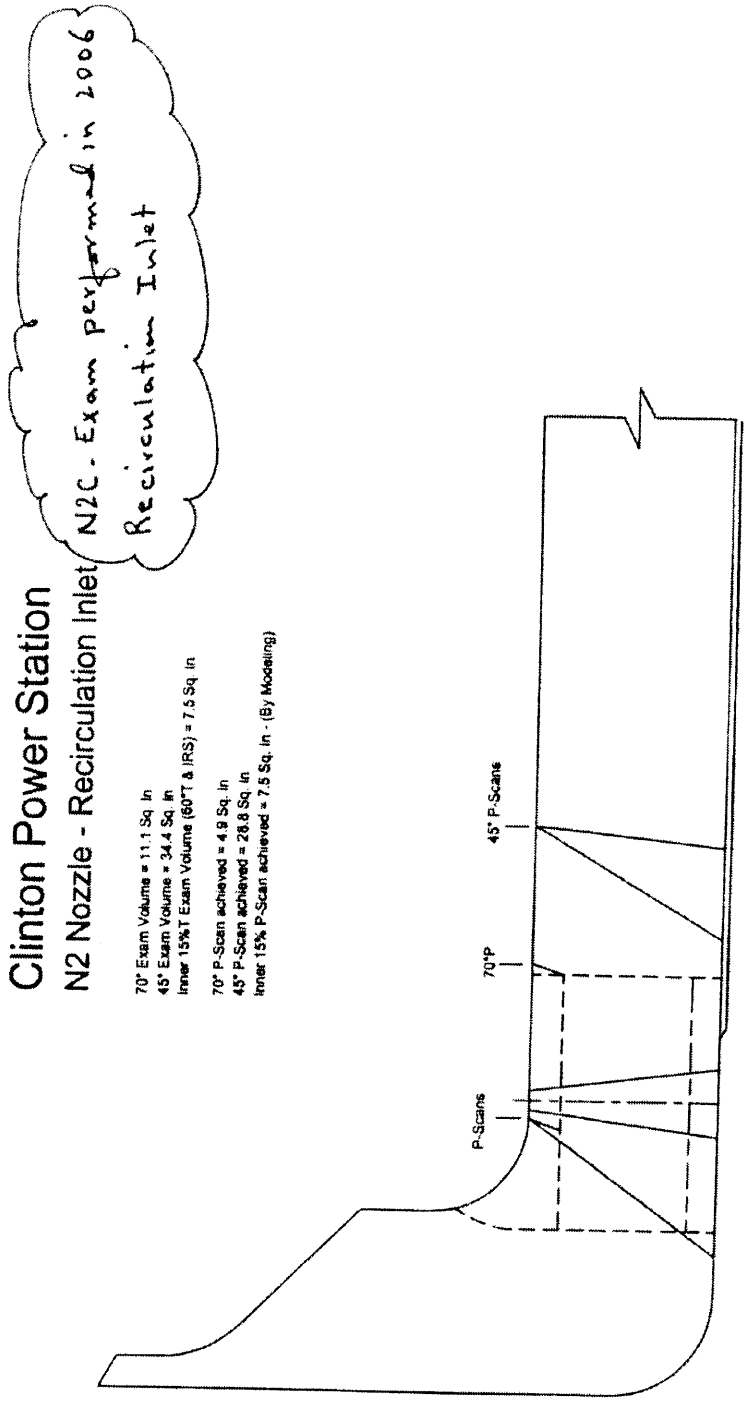

Figure 13: Weld N2C Exam Coverage

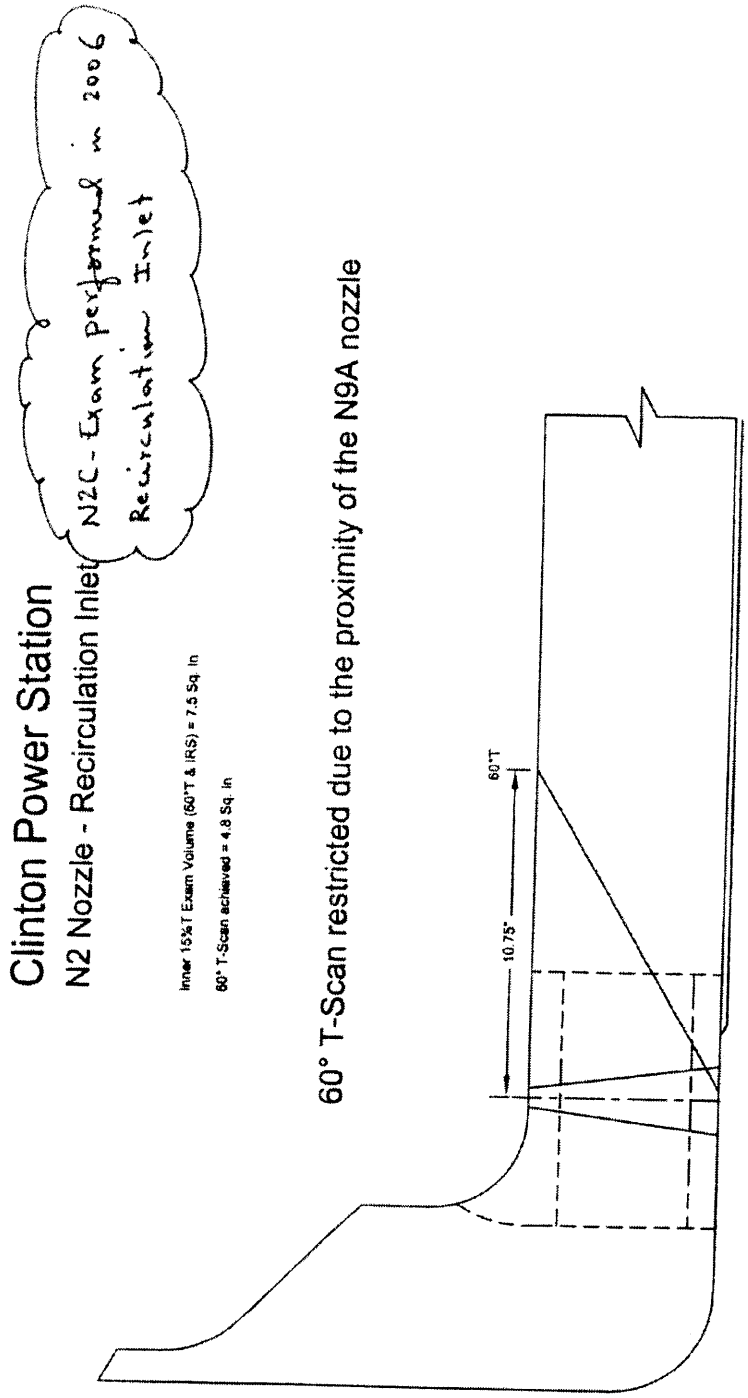

Figure 14: Weld N2C Exam Coverage

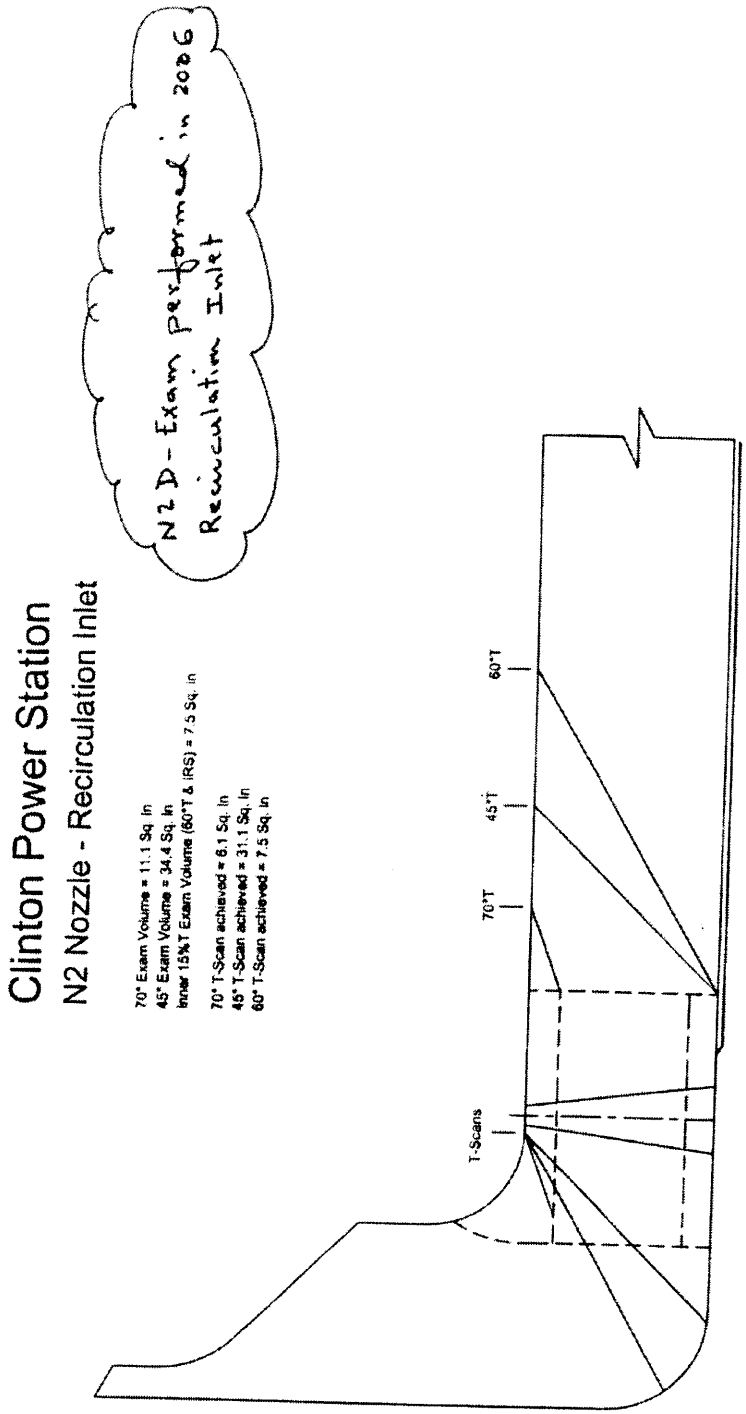

Figure 15: Weld N2D Exam Coverage

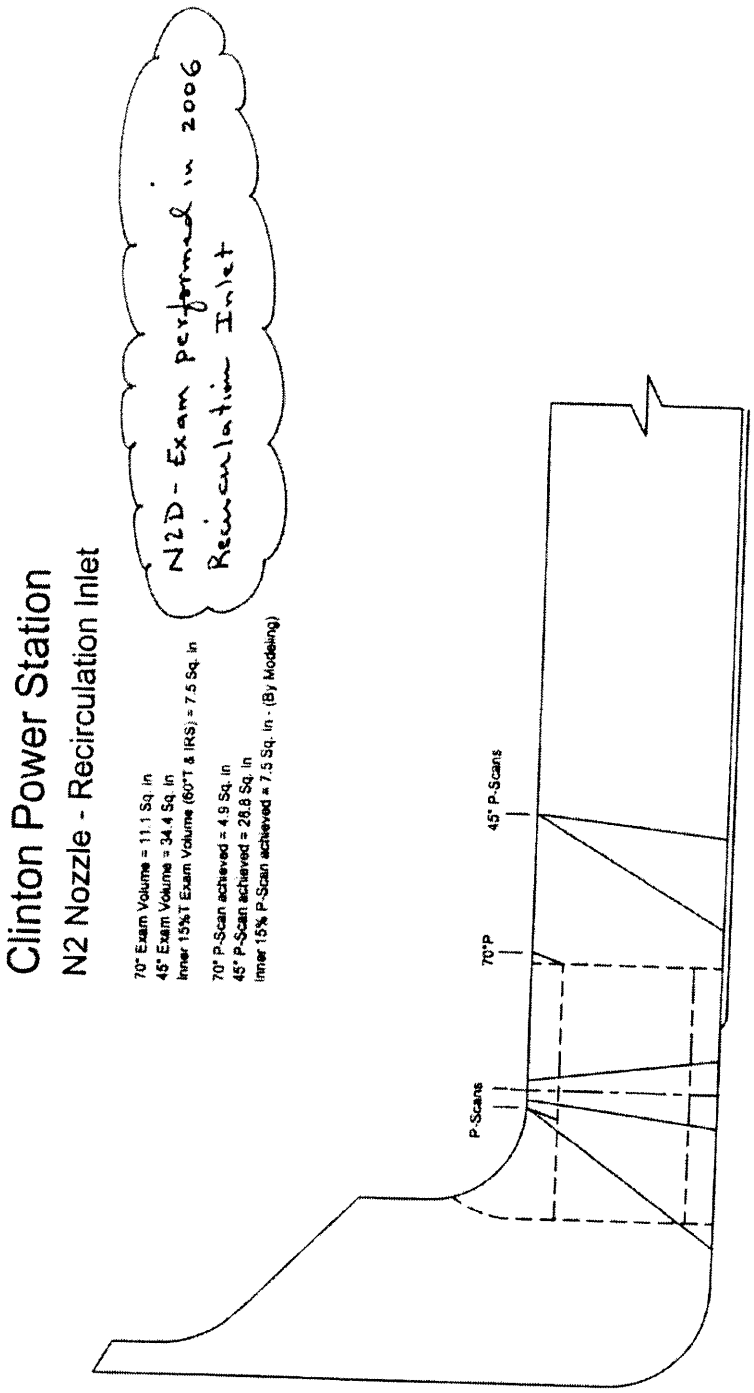

Figure 16: Weld N2D Exam Coverage

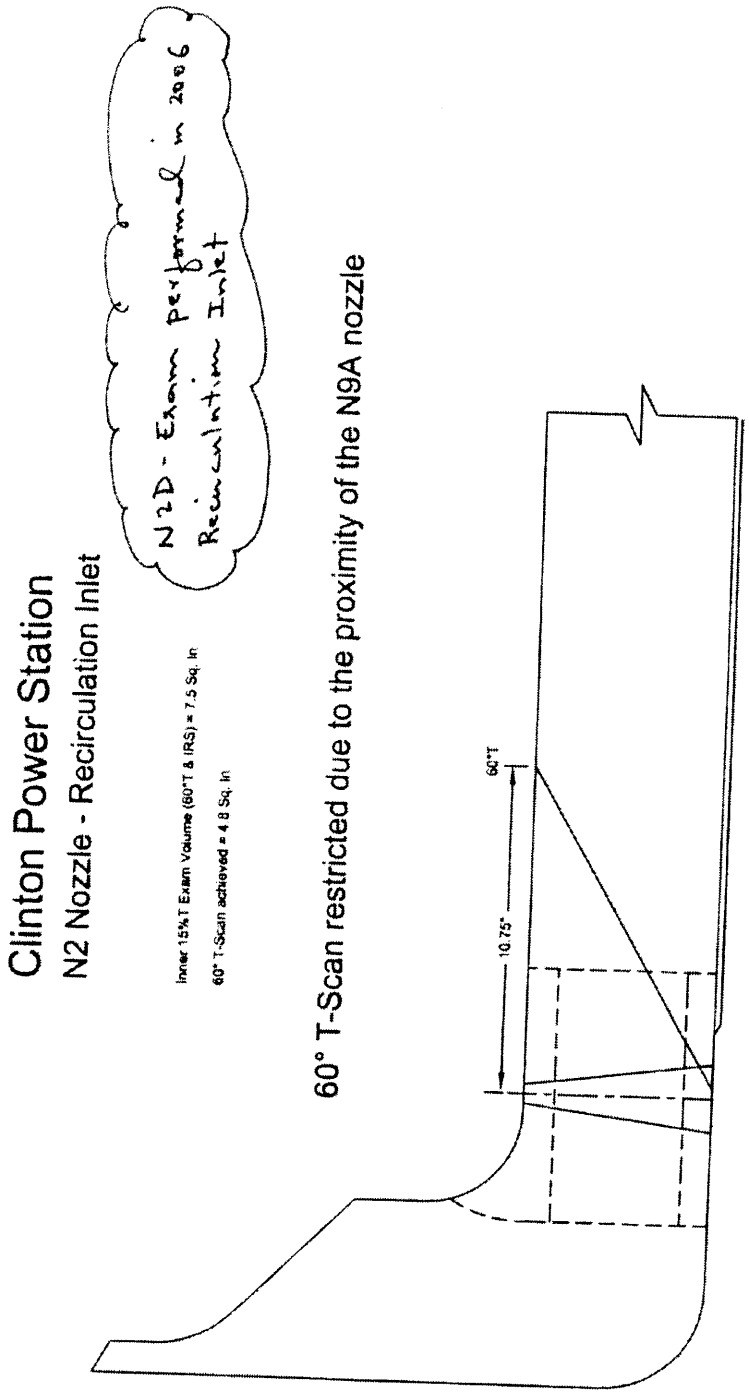

Figure 17: Weld N2D Exam Coverage

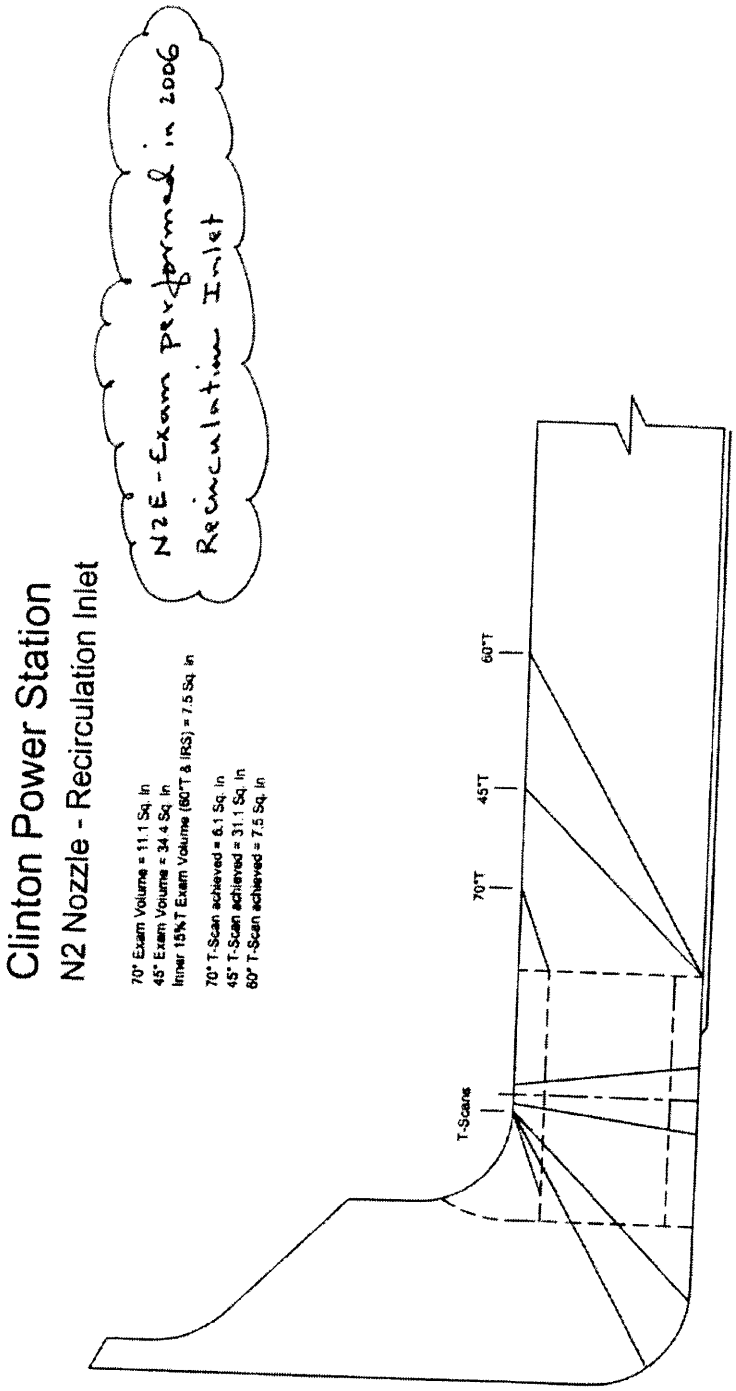

Figure 18: Weld N2E Exam Coverage

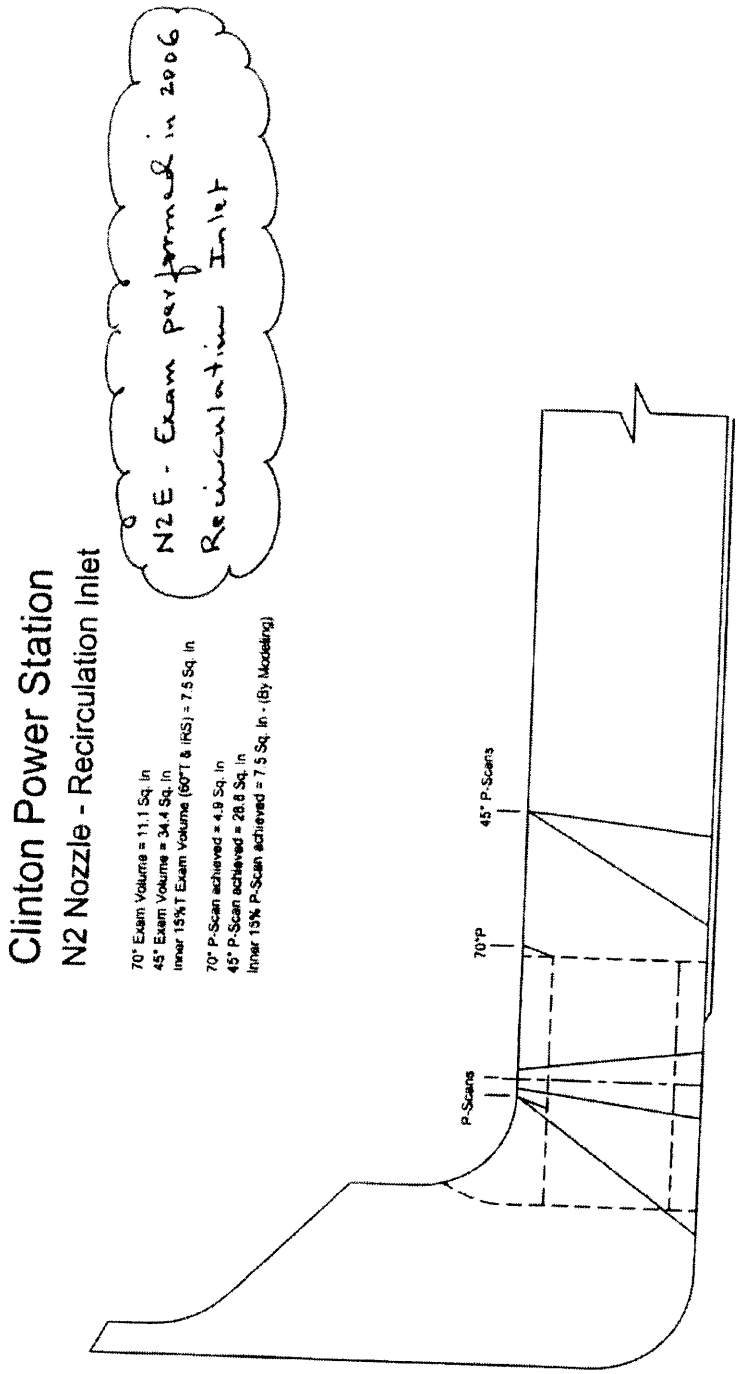

Figure 19: Weld N2E Exam Coverage

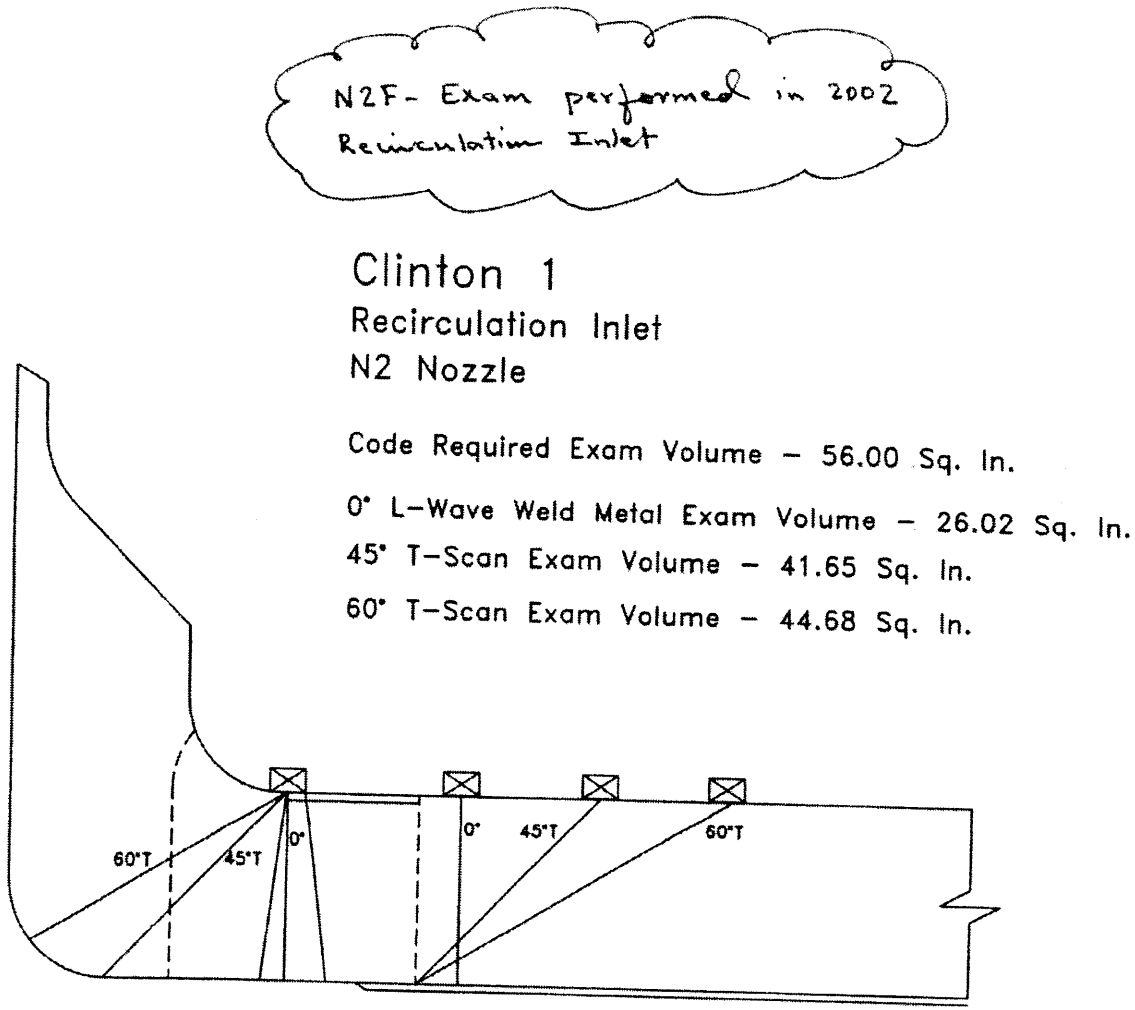

Figure 20: Weld N2F Exam Coverage

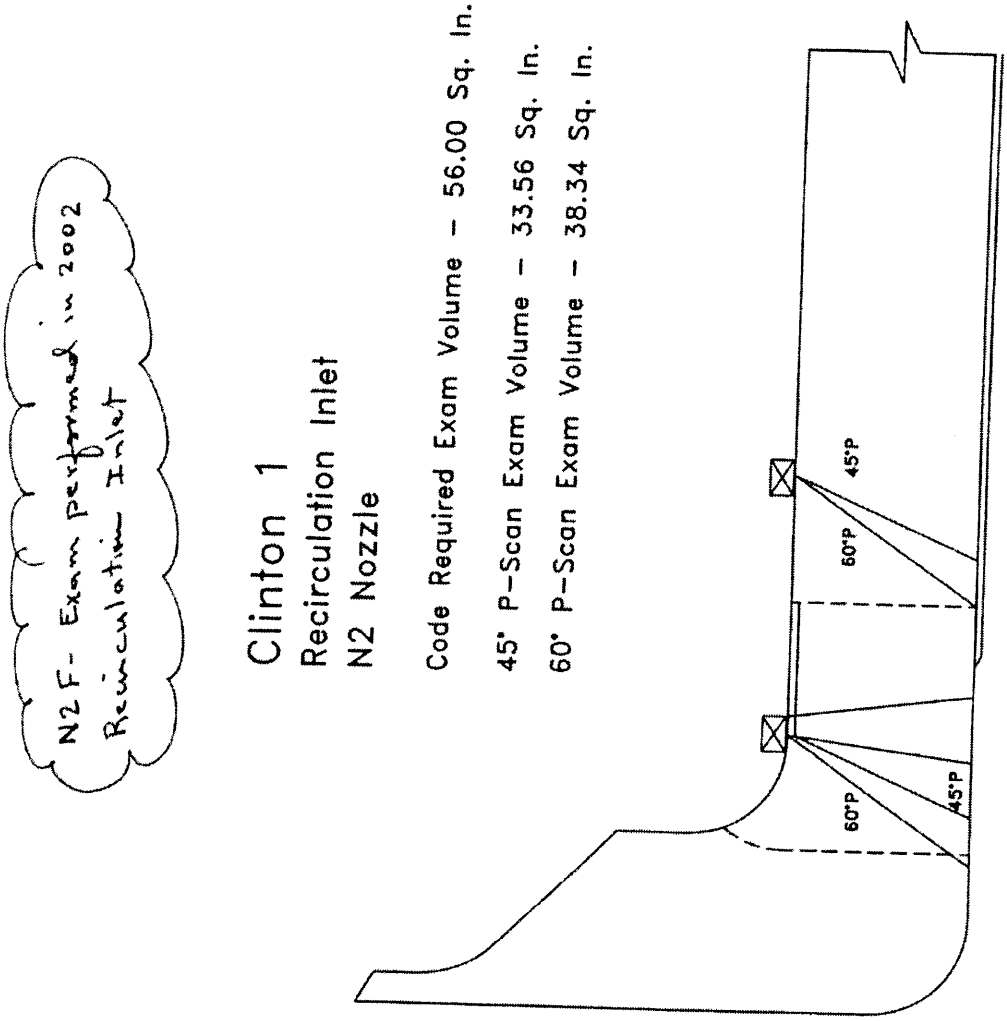

Figure 21: Weld N2F Exam Coverage

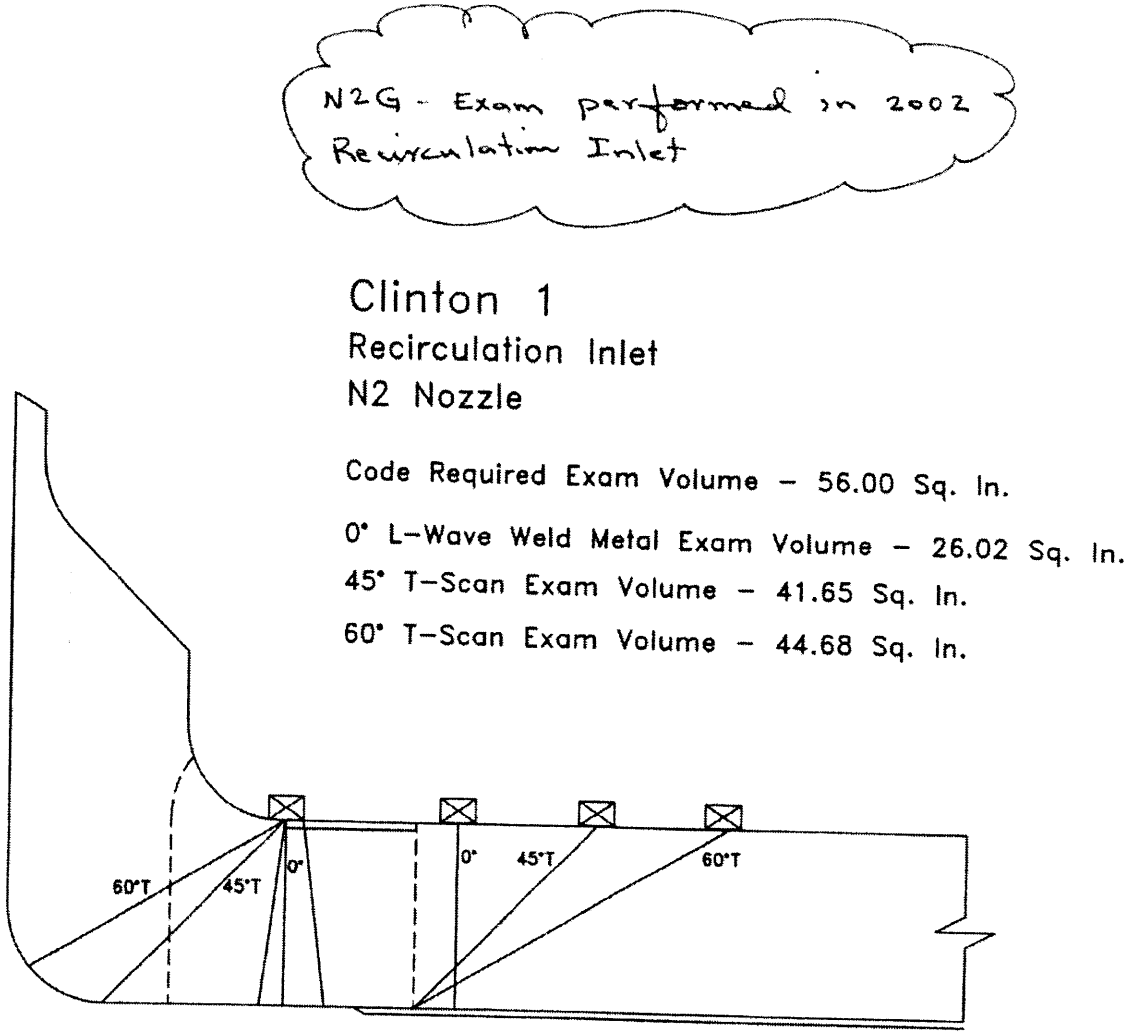

Figure 22: Weld N2G Exam Coverage

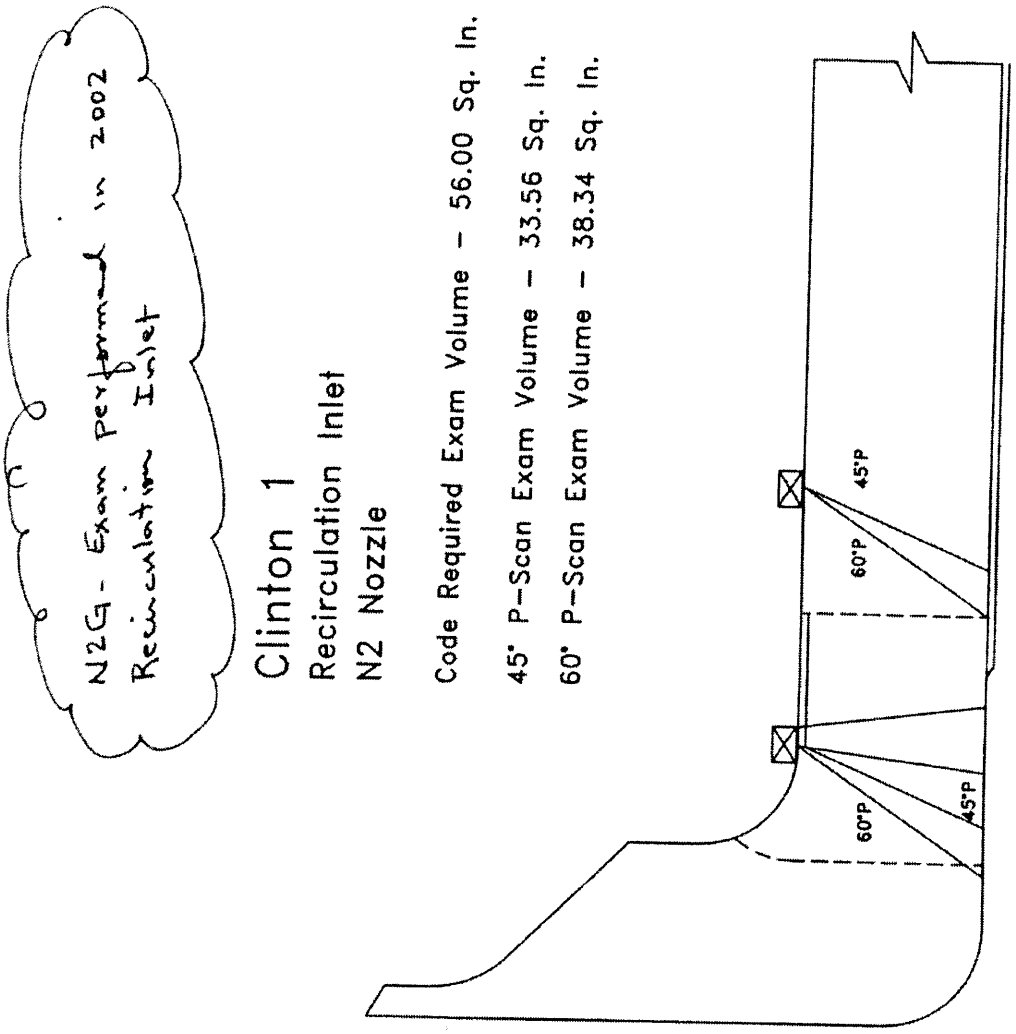

Figure 23: Weld N2G Exam Coverage

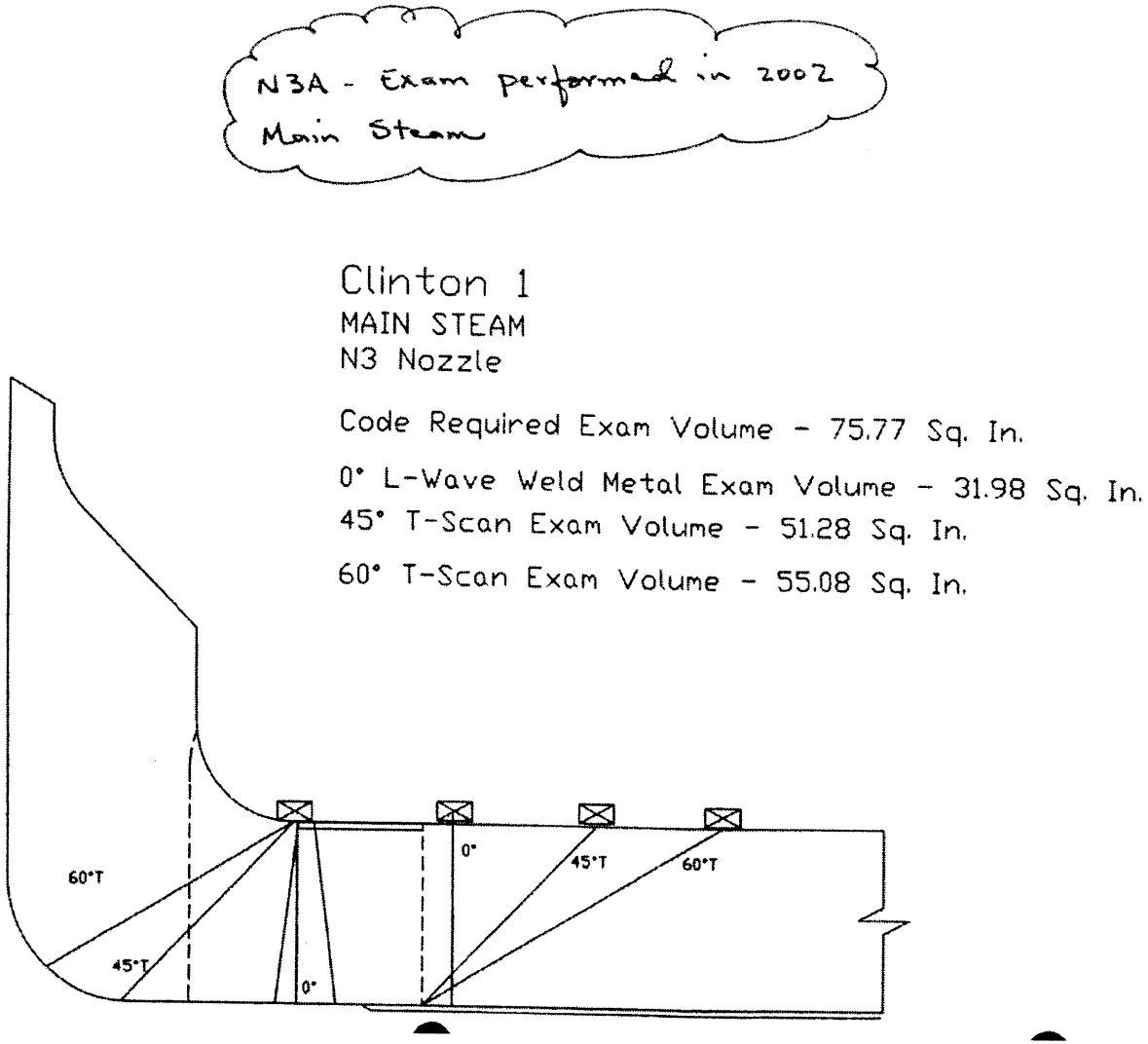

Figure 24: Weld N3A Exam Coverage

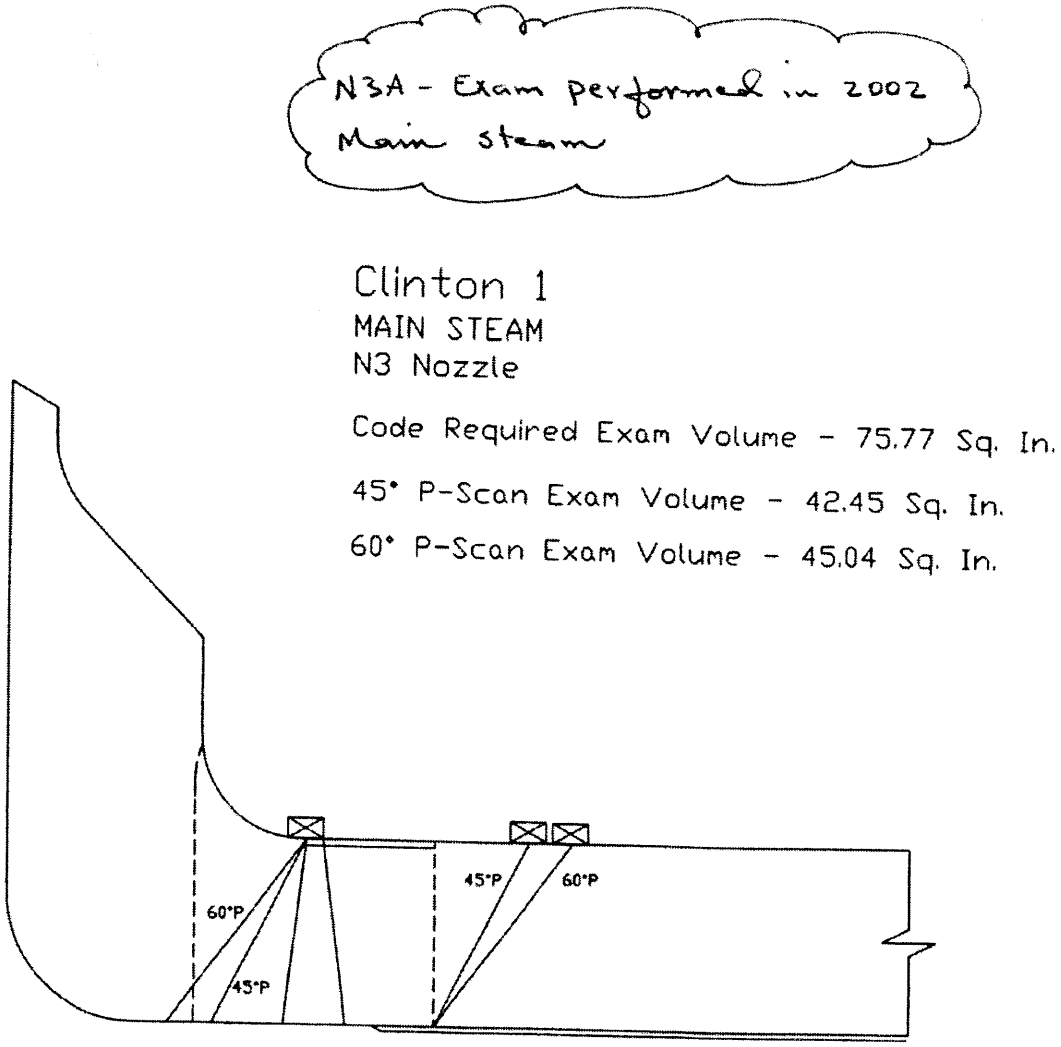

Figure 25: Weld N3A Exam Coverage

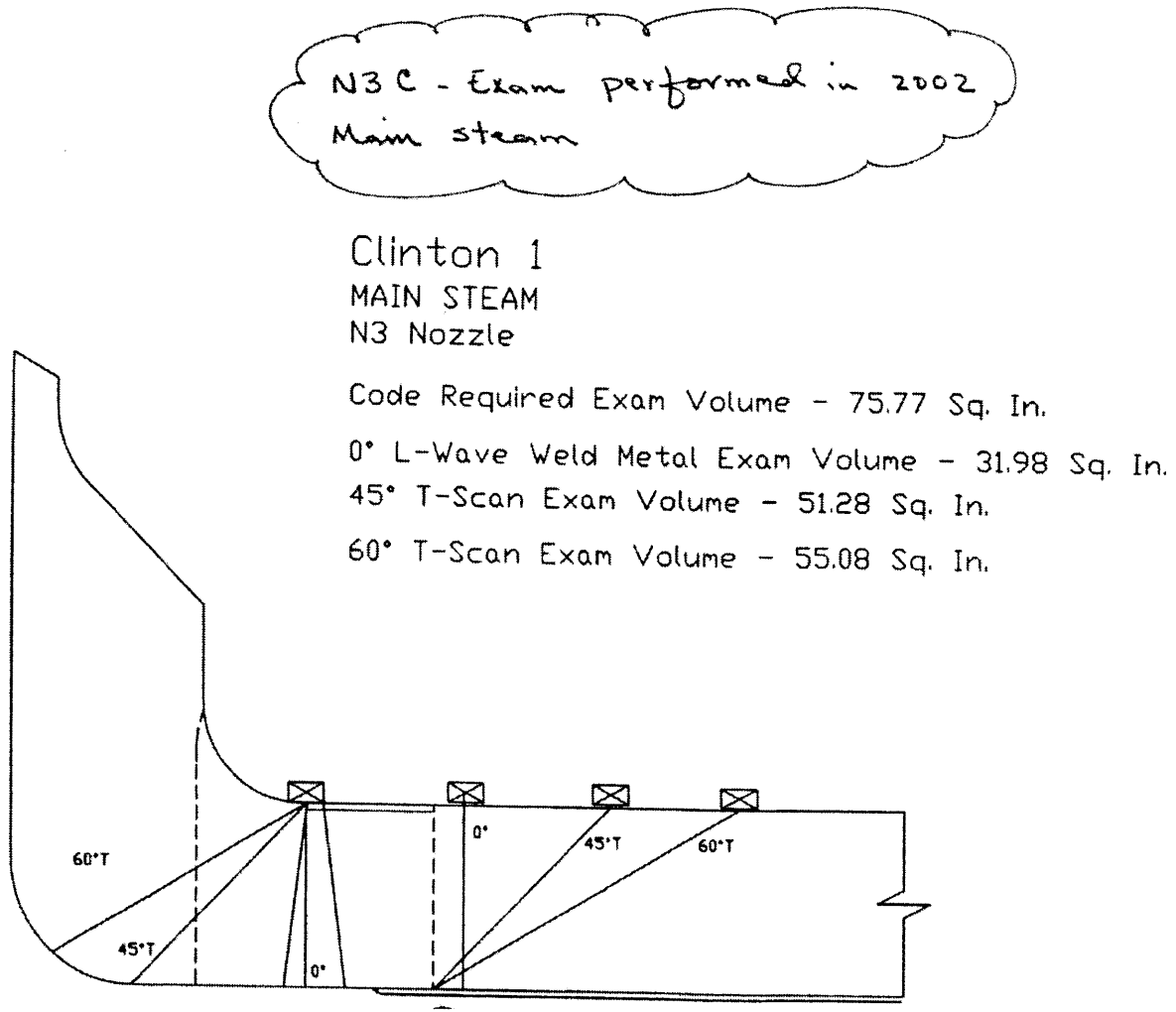

Figure 26: Weld N3C Exam Coverage

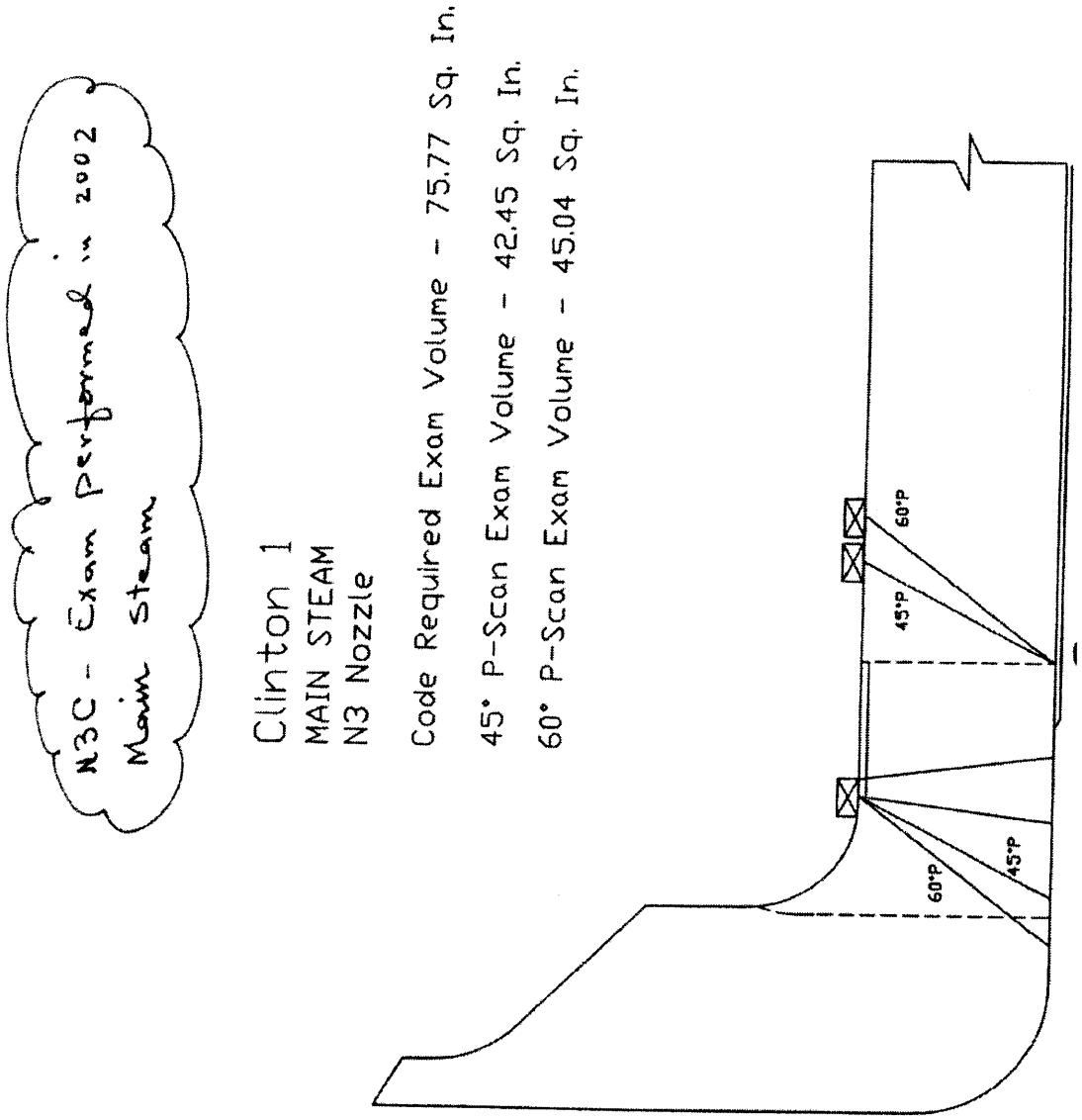

Figure 27: Weld N3C Exam Coverage

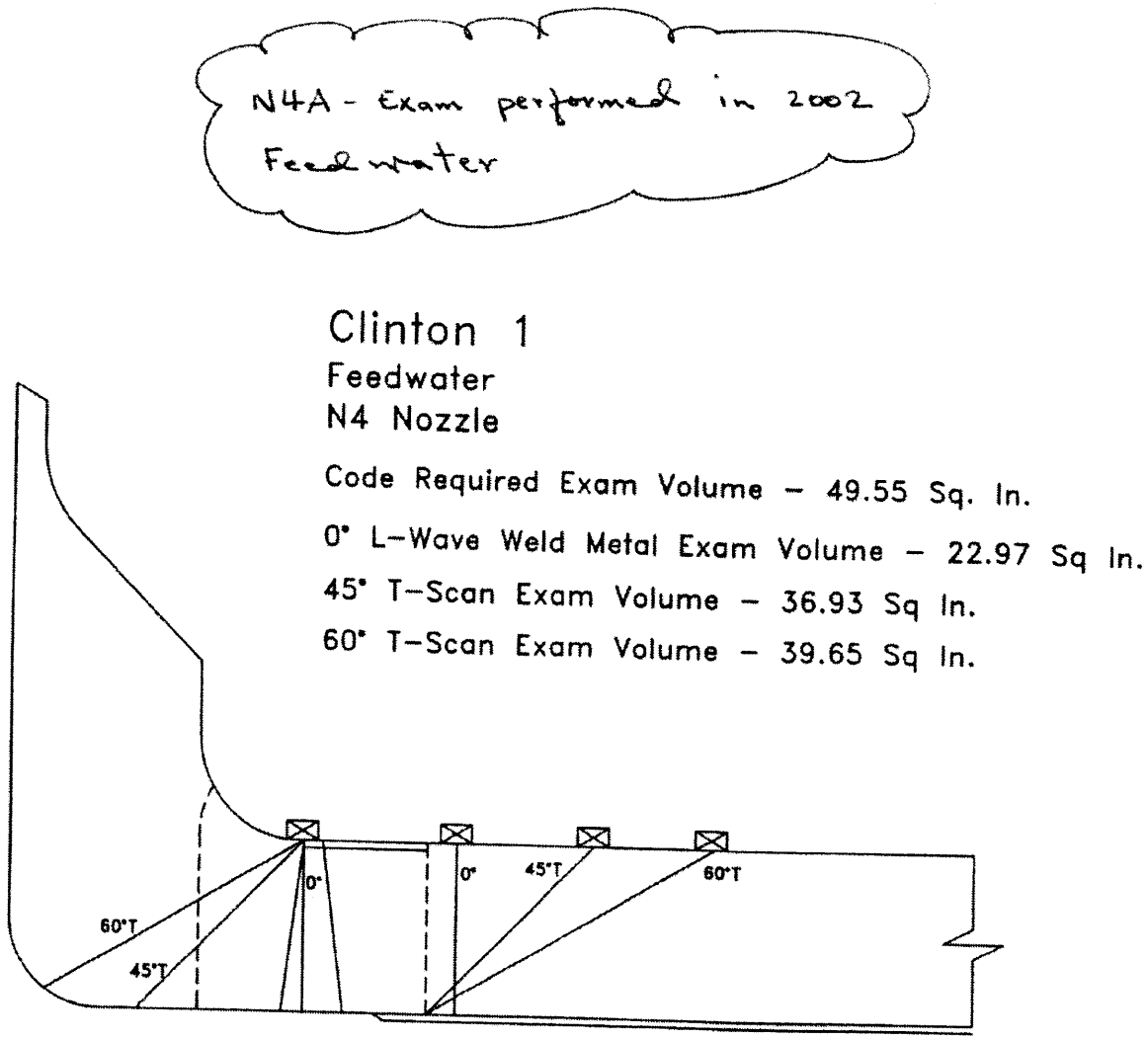

Figure 28: Weld N4A Exam Coverage

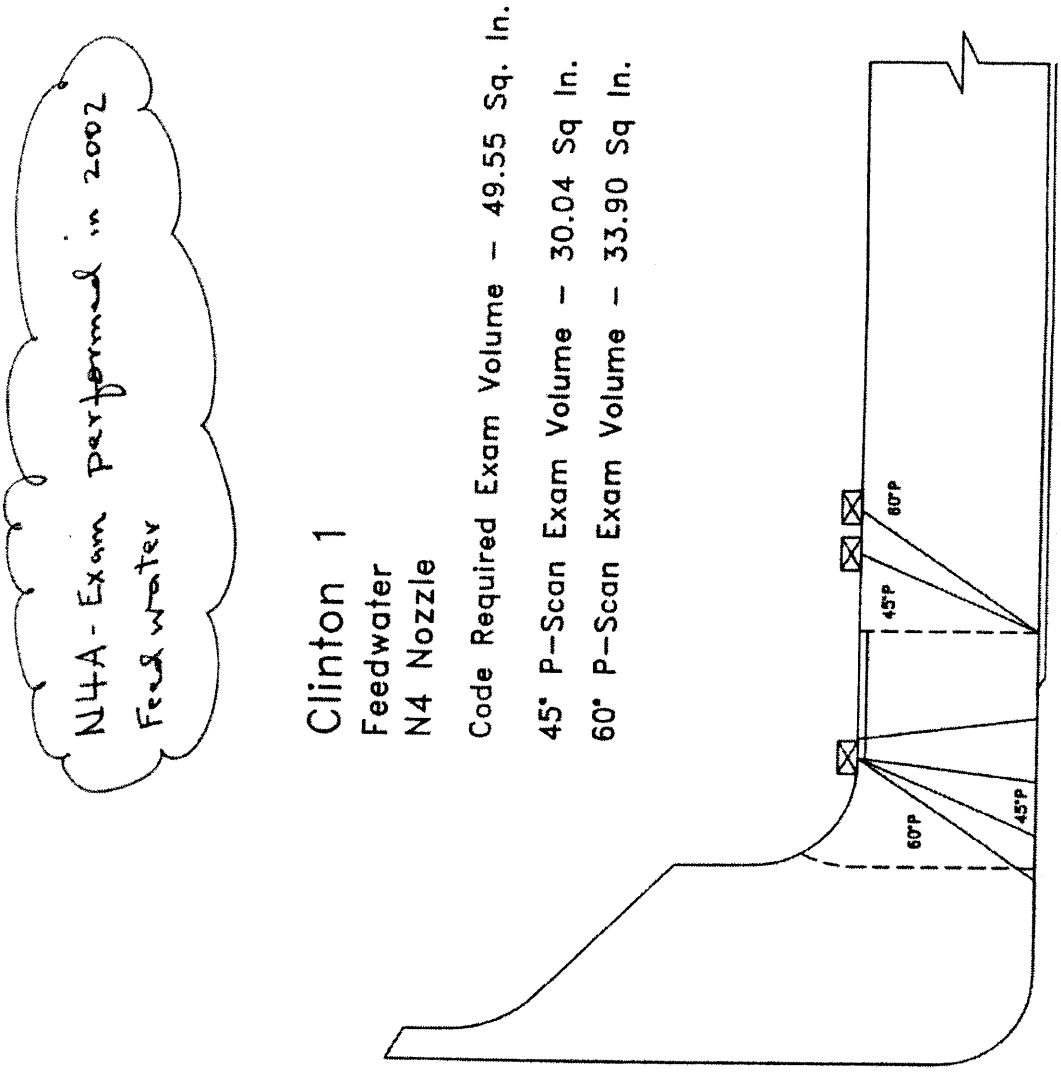

Figure 29: Weld N4A Exam Coverage

Clinton Unit 1

N4 - Feedwater

70° Exam Volume = 10.5 Sq. In.
45° Exam Volume = 34.9 Sq. In.
Inner 15%T Exam Volume (IRS & 60°T = 7.7 Sq. In.

70° T-Scan Achieved = 6.1 Sq. In.
45° T-Scan Achieved = 31.3 Sq. In.
60° T-Scan Achieved = 7.7 Sq. In.

N4B - Exam performed in 2010
Feedwater

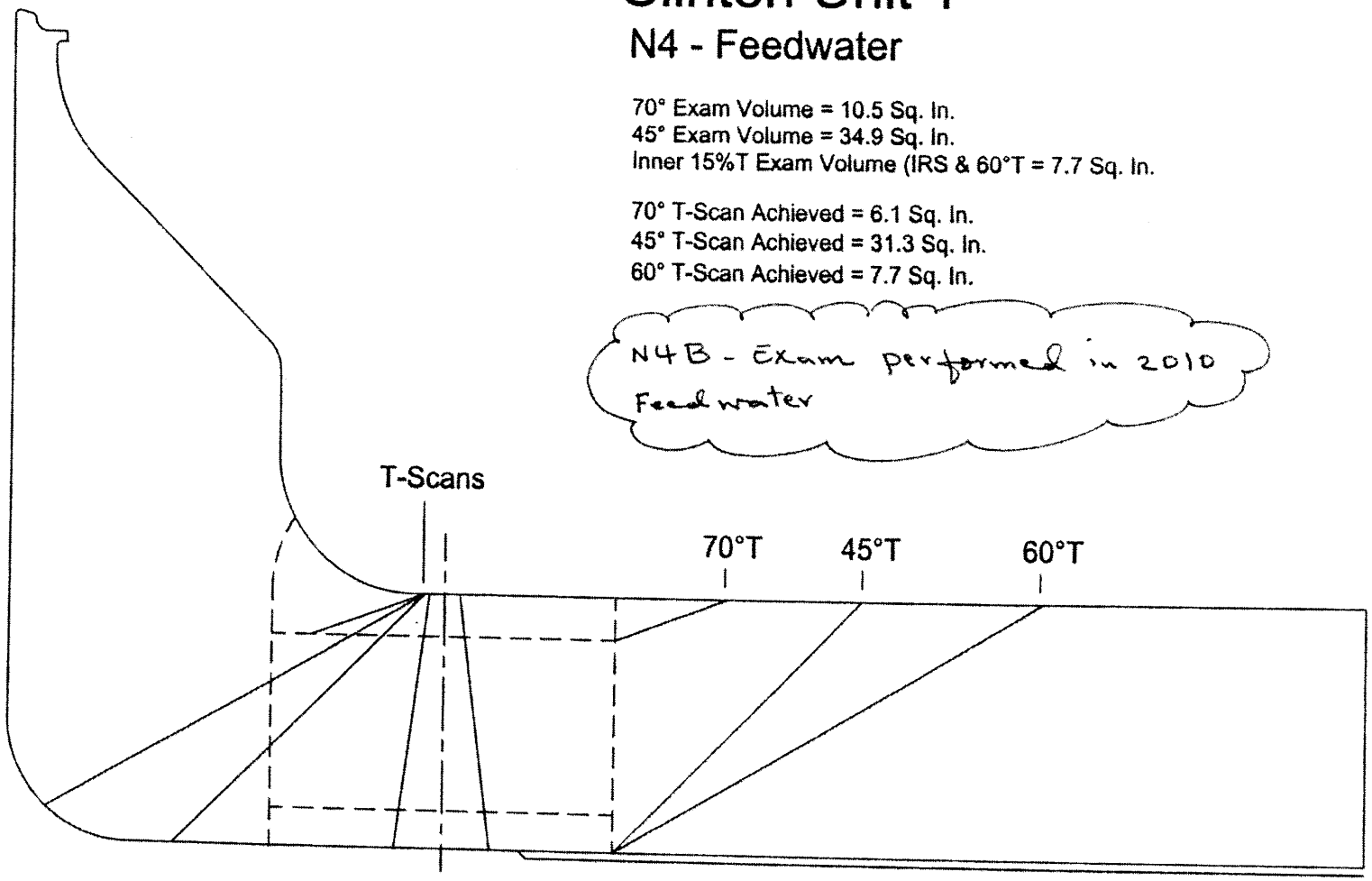

Clinton Unit 1, C1R12

N4B - Report C1R12-029

Figure 30: Weld N4B Exam Coverage

Clinton Unit 1

N4 - Feedwater

70° Exam Volume = 10.3 Sq. In.
45° Exam Volume = 34 9 Sq. In.
Inner 15%t Exam Volume (IRS & 60°T) = 7.7 Sq. In.

70° P-Scan Achieved = 4.9 Sq. In.
45° P-Scan Achieved = 25.4 Sq. In.
IRS P-Scan Achieved = 7.7 Sq. In. (By Modeling)

N4B - Exam performed in 2010
Feedwater

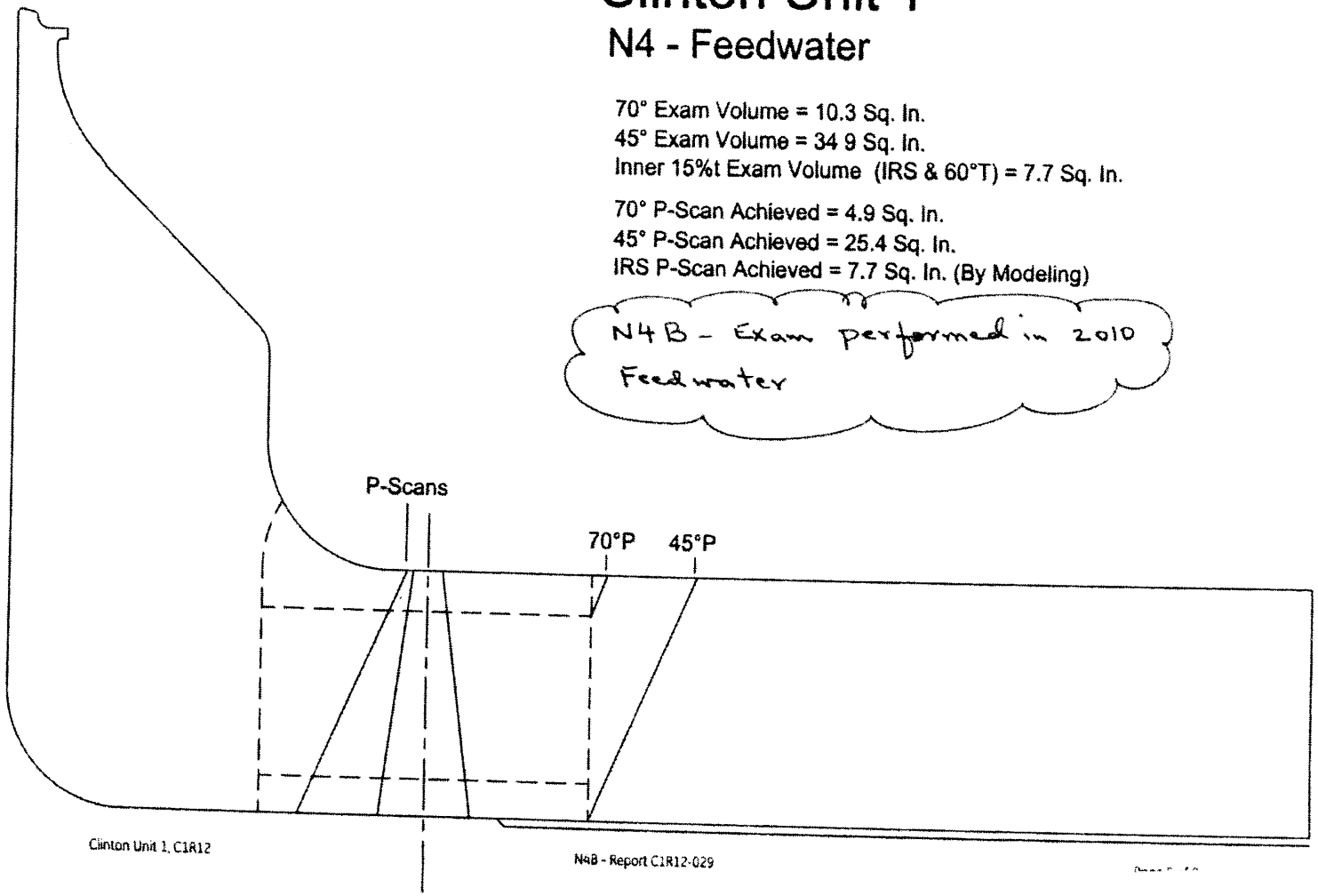

Figure 31: Weld N4B Exam Coverage

Clinton Unit 1

N4 - Feedwater

70° Exam Volume = 10.5 Sq. In.
45° Exam Volume = 34.9 Sq. In.
Inner 15%T Exam Volume (IRS & 60°T = 7.7 Sq. In.

70° T-Scan Achieved = 6.1 Sq. In.
45° T-Scan Achieved = 31.3 Sq. In.
60° T-Scan Achieved = 7.7 Sq. In.

N4C - Exam performed in 2010
Feedwater

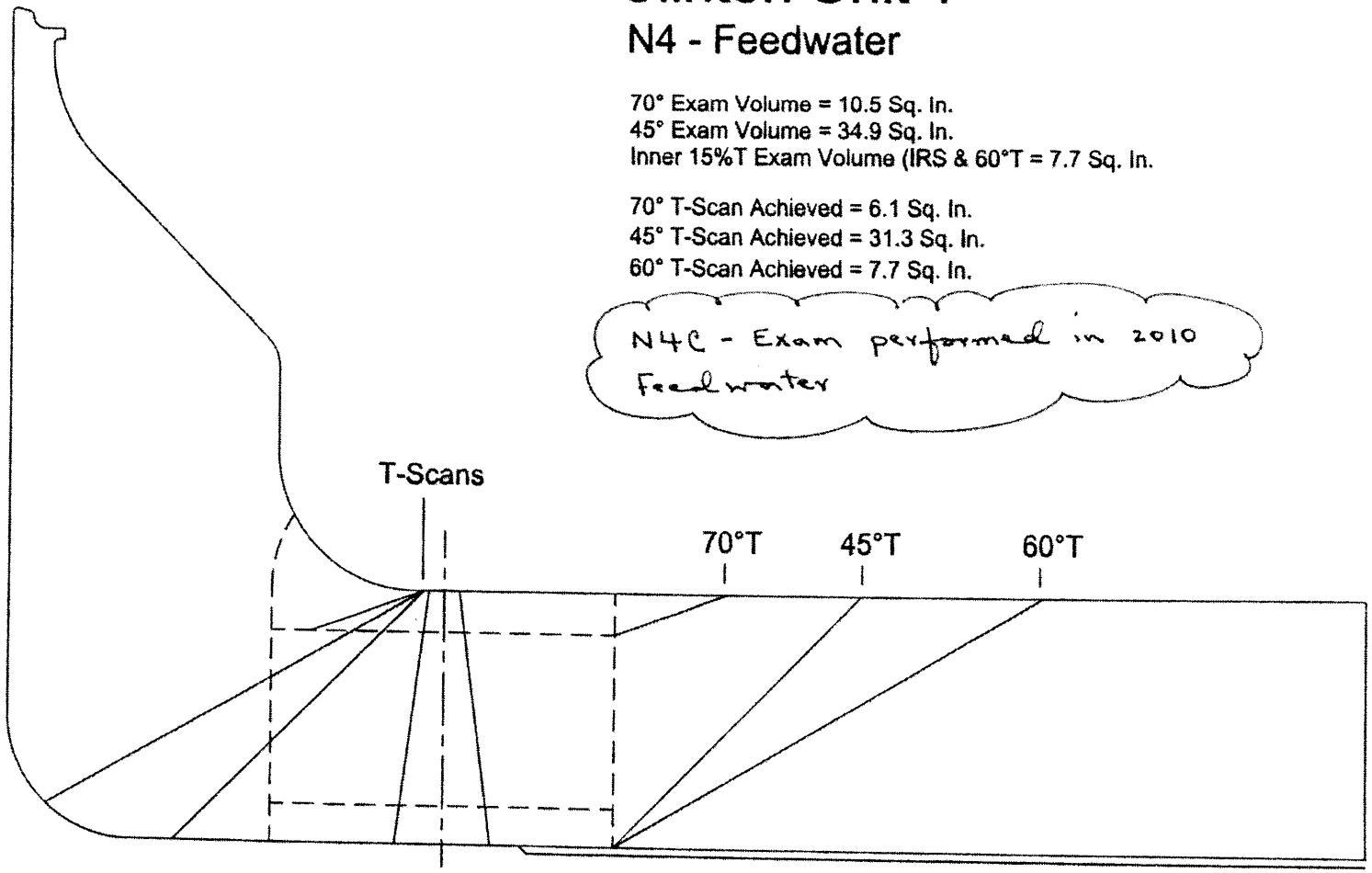

Clinton Unit 1, C1R12

N4C - Report C1R12-030

Page 4 of 8

Figure 32: Weld N4C Exam Coverage

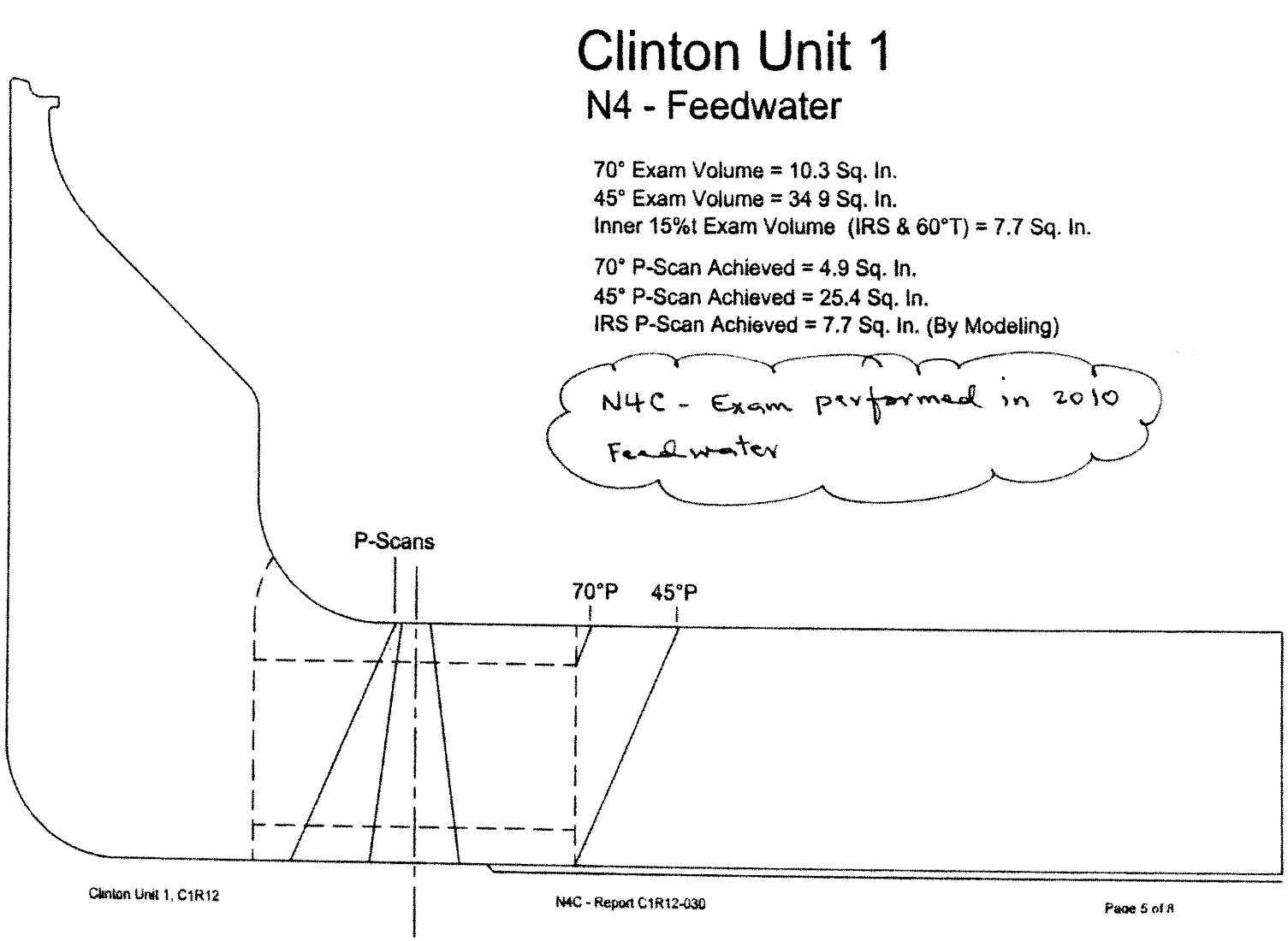

Figure 33: Weld N4C Exam Coverage

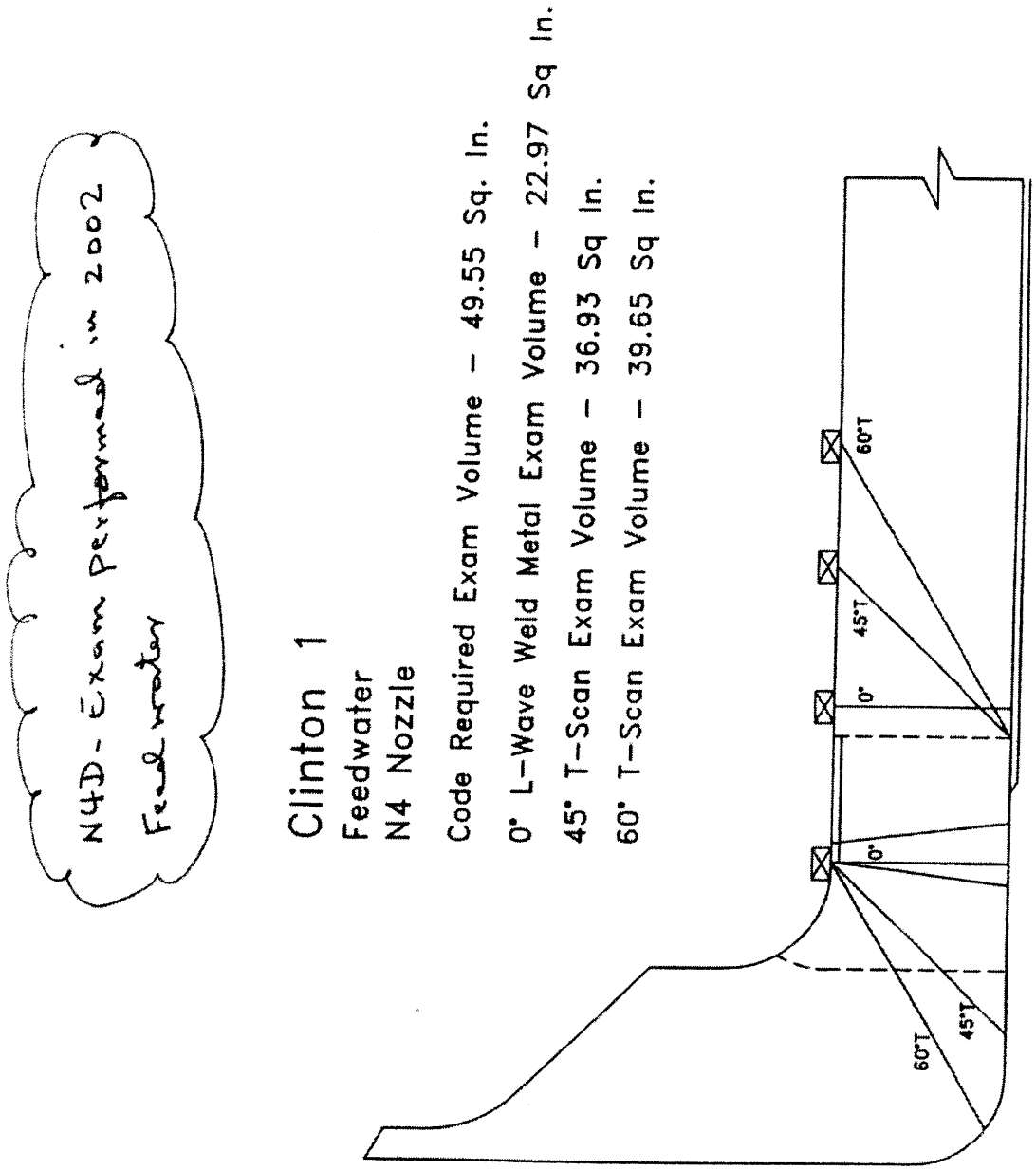

Figure 34: Weld N4D Exam Coverage

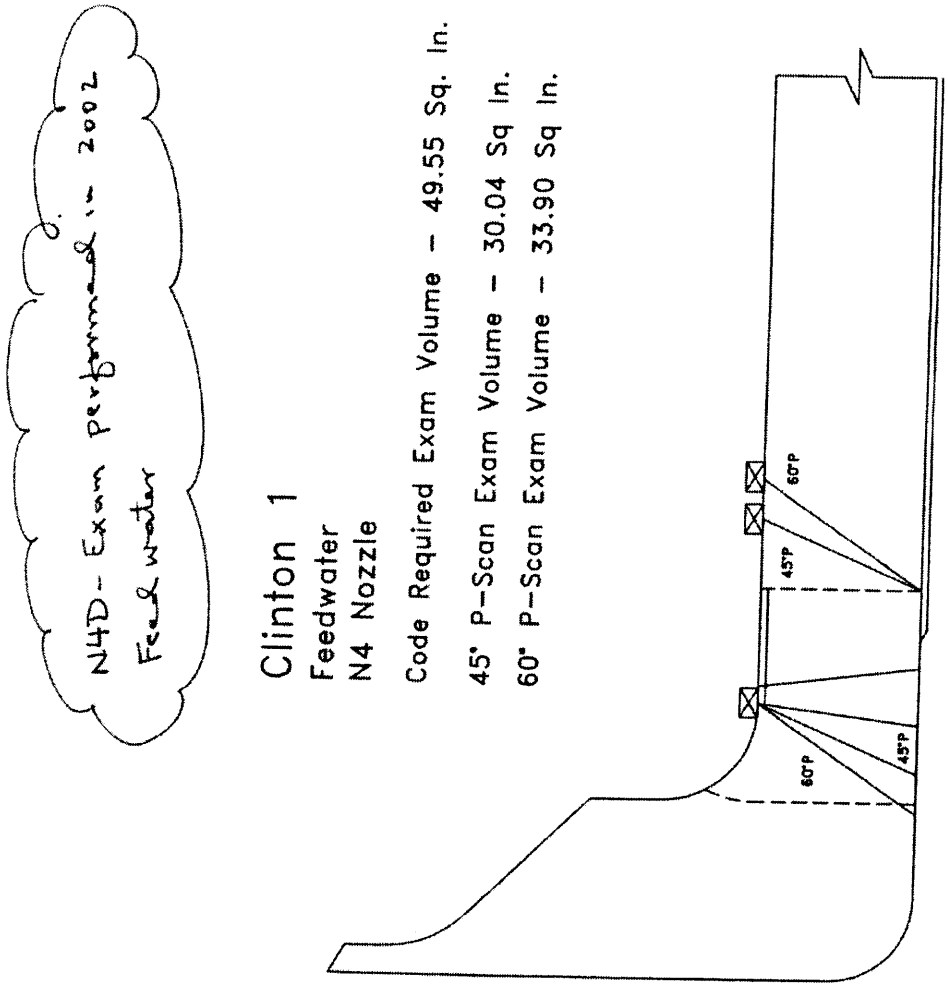

Figure 35: Weld N4D Exam Coverage

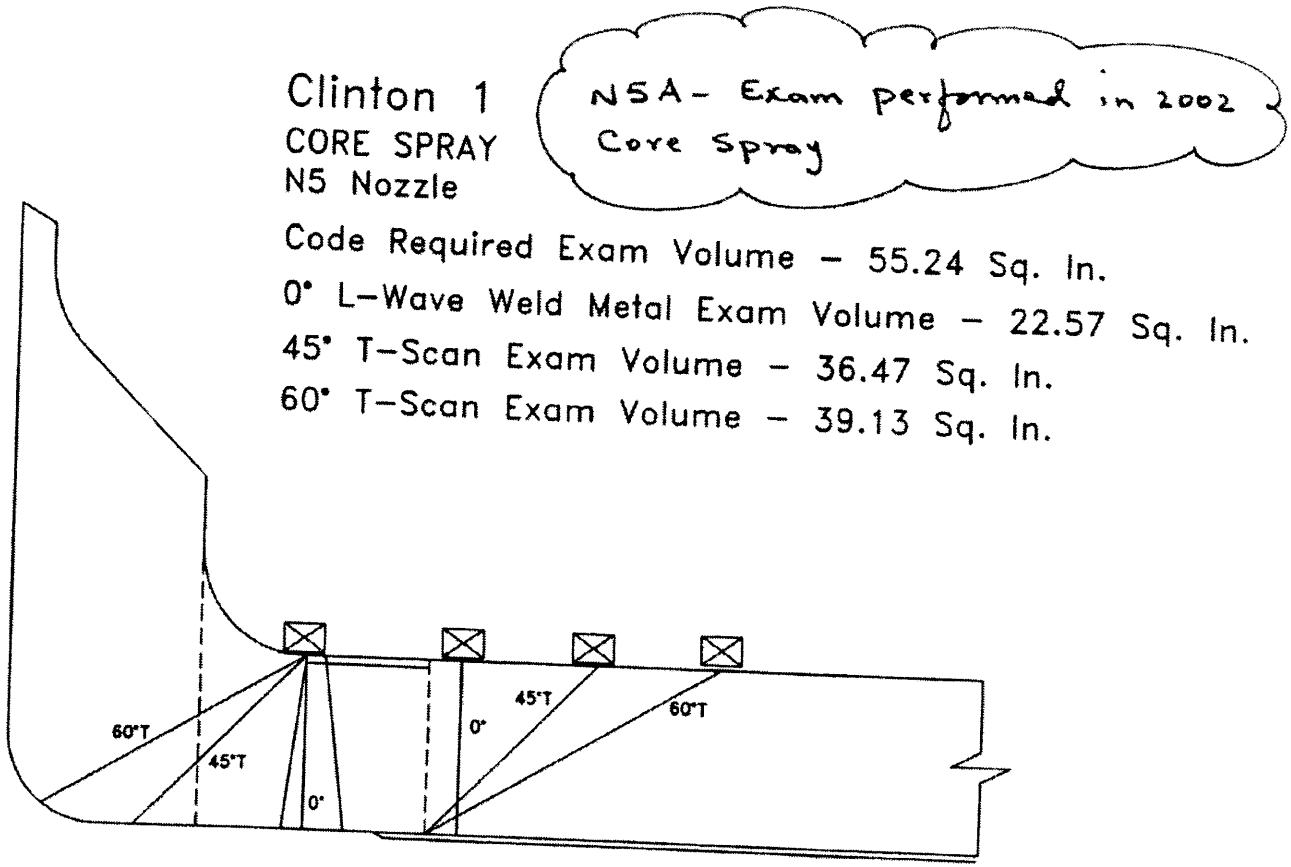

Figure 36: Weld N5A Exam Coverage

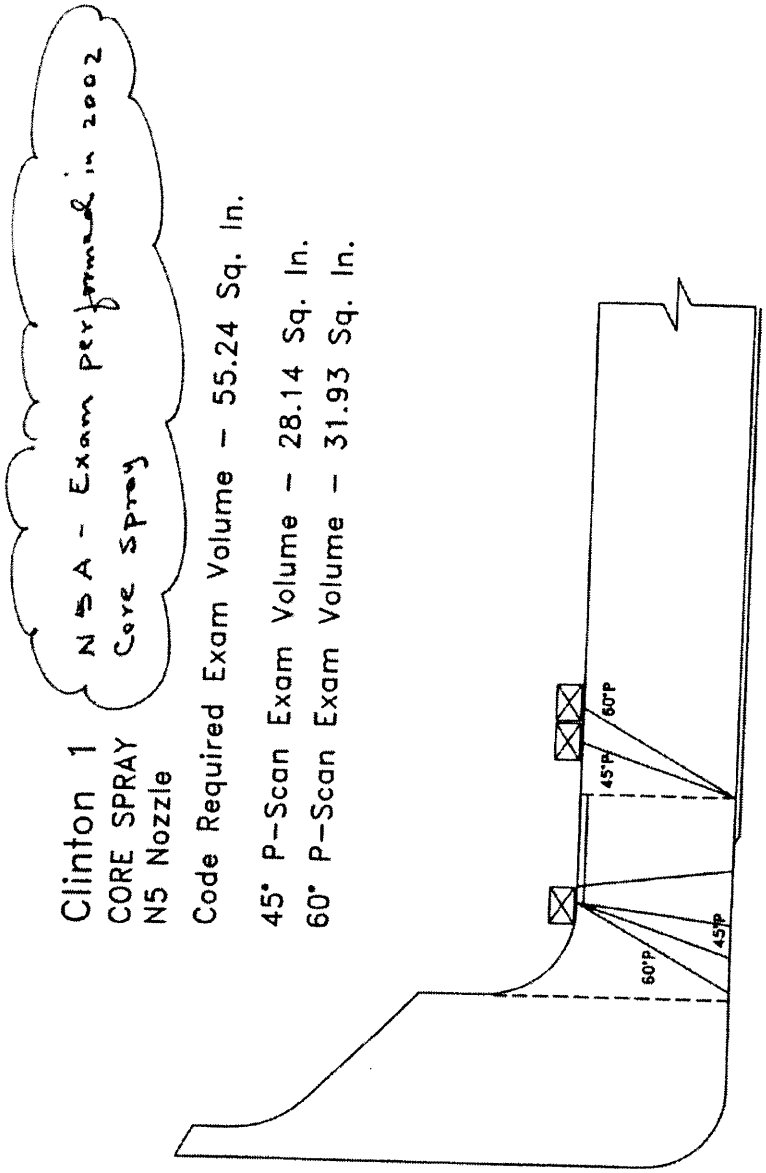

Figure 37: Weld N5A Exam Coverage

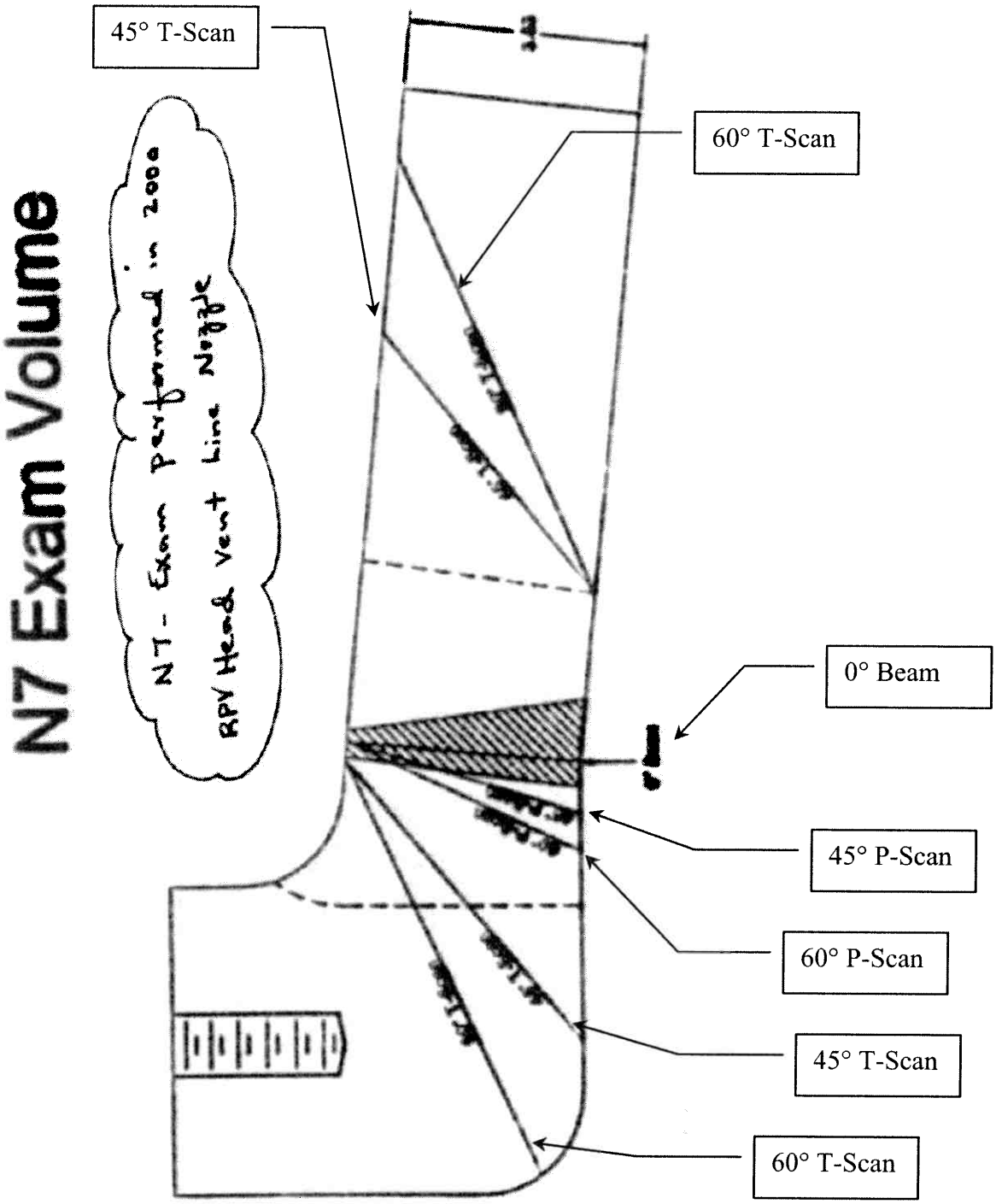

Figure 40: Weld N7 Exam Coverage

Clinton Unit 1

N6 - RHR/LPCI

N6B - Exam performed in 2010
RHR / LPCI

70° Exam Volume = 10.3 Sq. In.
45° Exam Volume = 34.3 Sq .In.
Inner 15%t Exam Volume (IRS & 60°T) = 7.5 Sq. In.

70° T-Scan Achieved = 5.9 Sq. In.
45° T-Scan Achieved = 30.6 Sq. In.
60° T-Scan Achieved = 7.5 Sq. In.

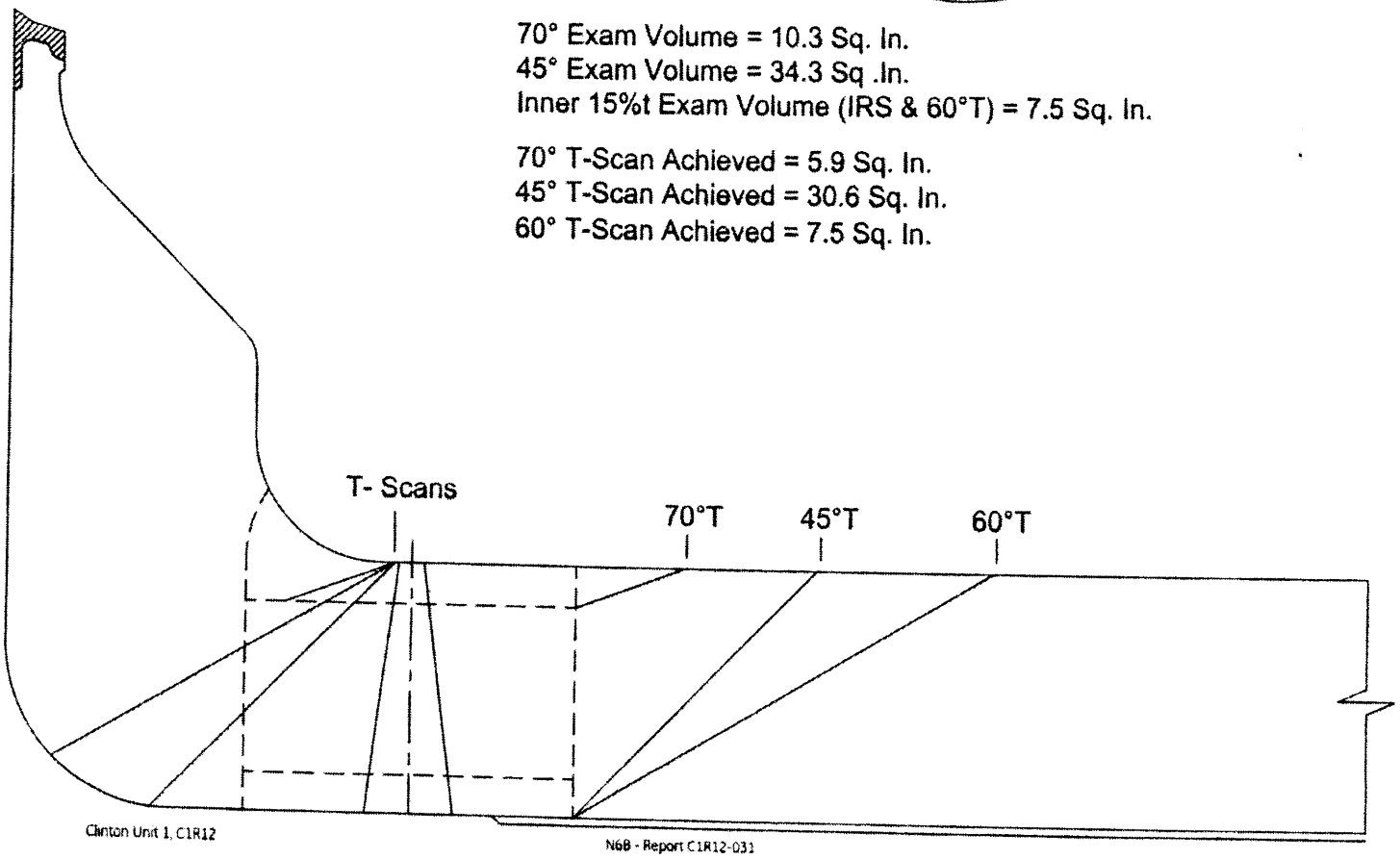

Figure 39: Weld N6B Exam Coverage

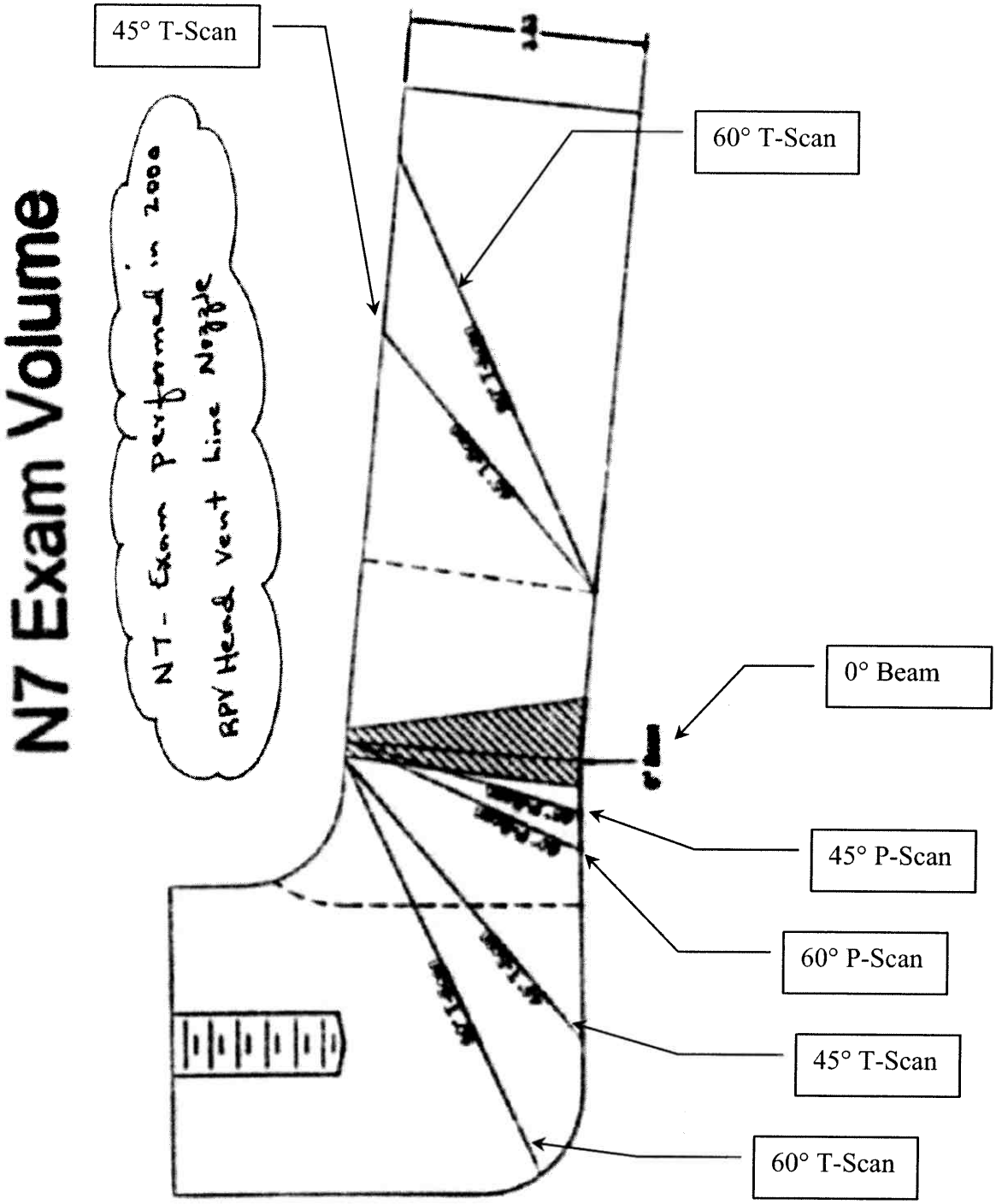

Figure 40: **Weld N7 Exam Coverage**

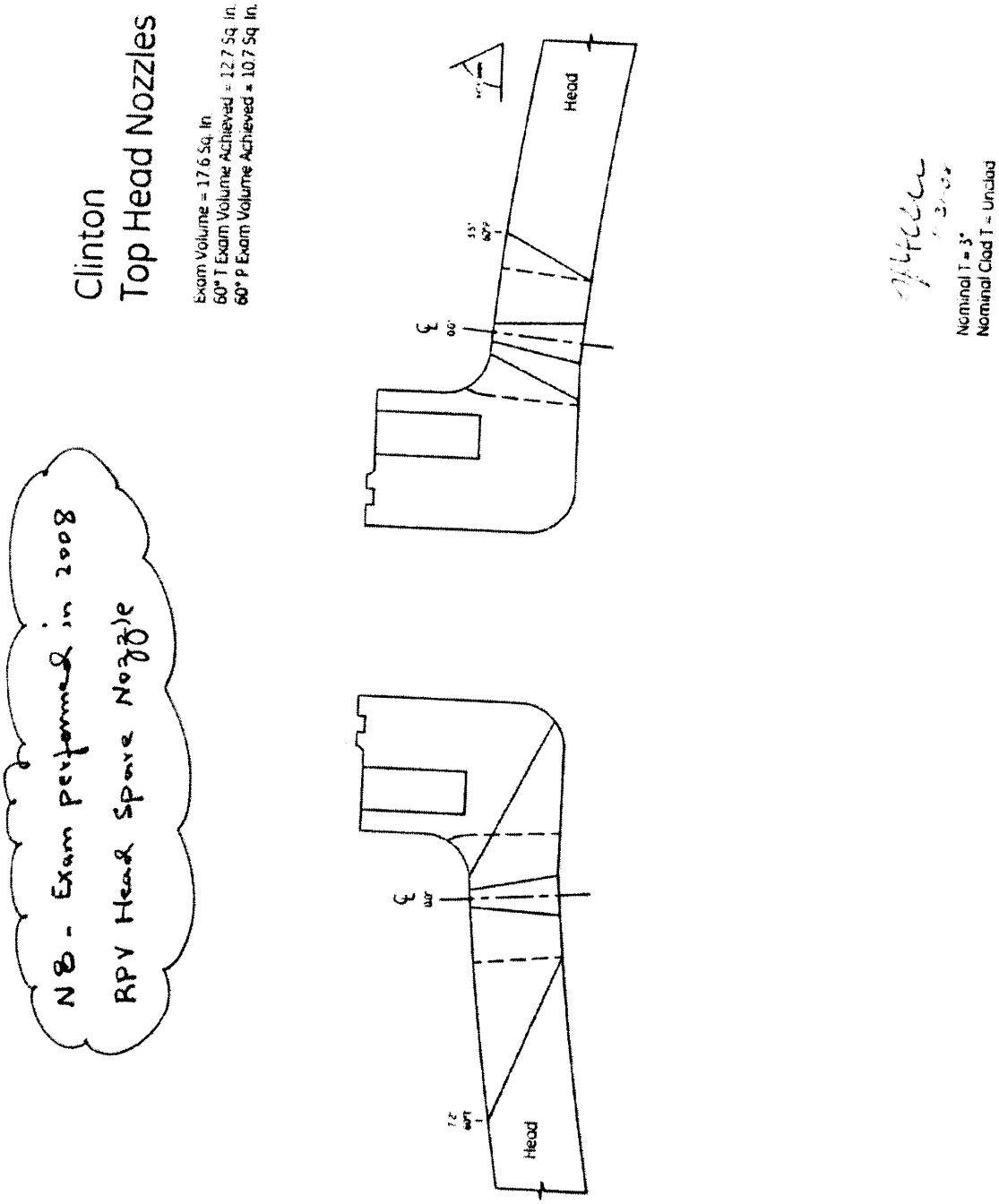

Figure 41: Weld N8 Exam Coverage

REPORT 02-022
PAGE 6 of 8

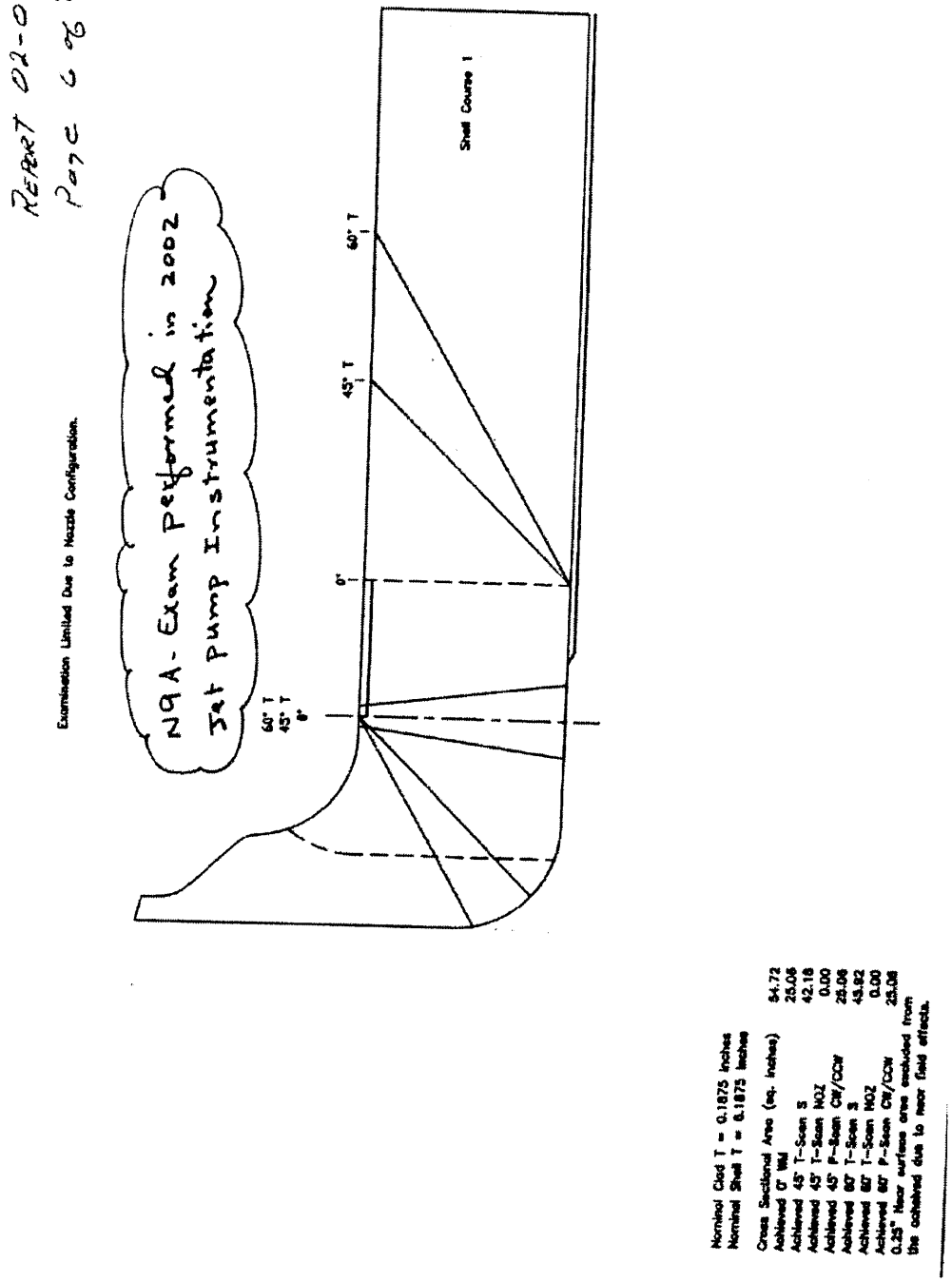

Figure 42: Weld N9A Exam Coverage

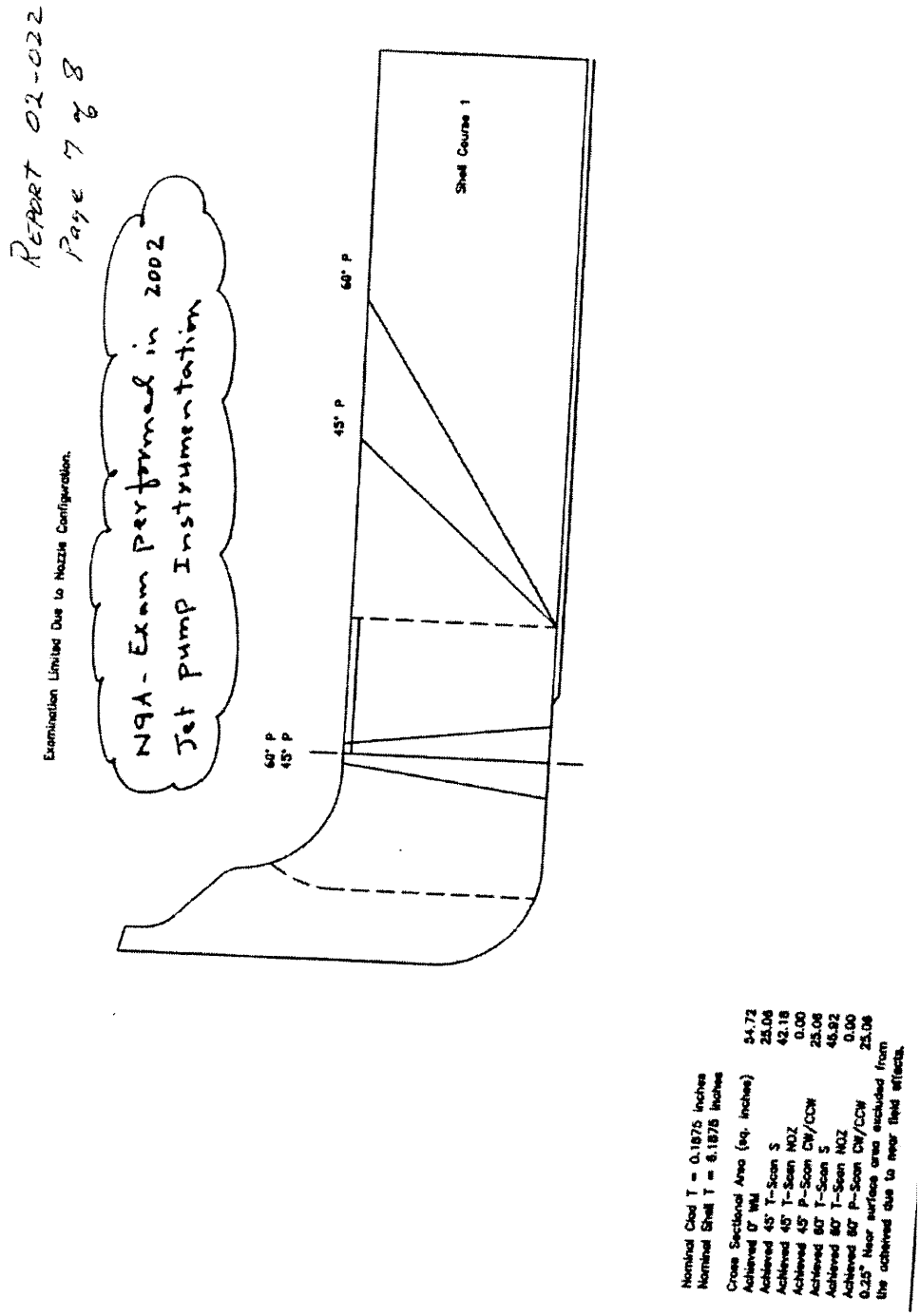

Figure 43: Weld N9A Exam Coverage

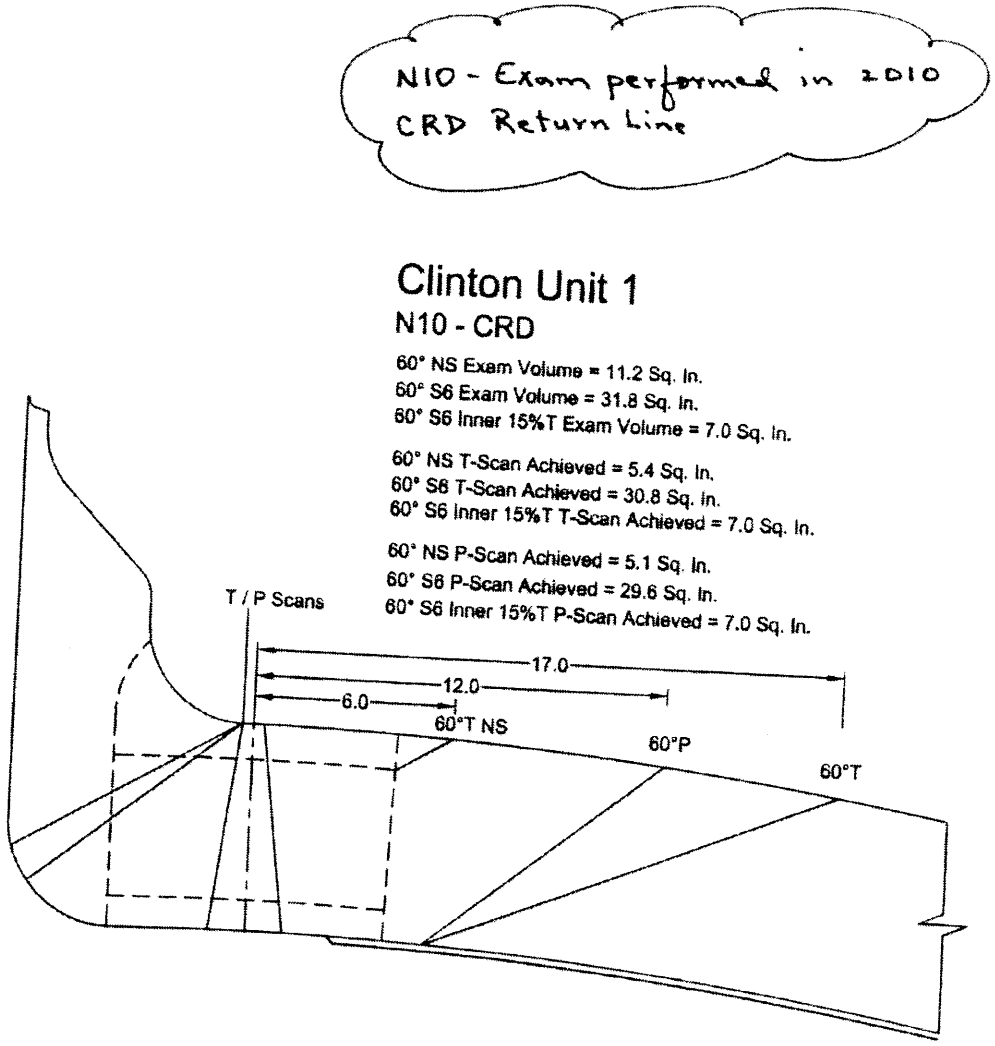

Figure 44: Weld N10 Exam Coverage

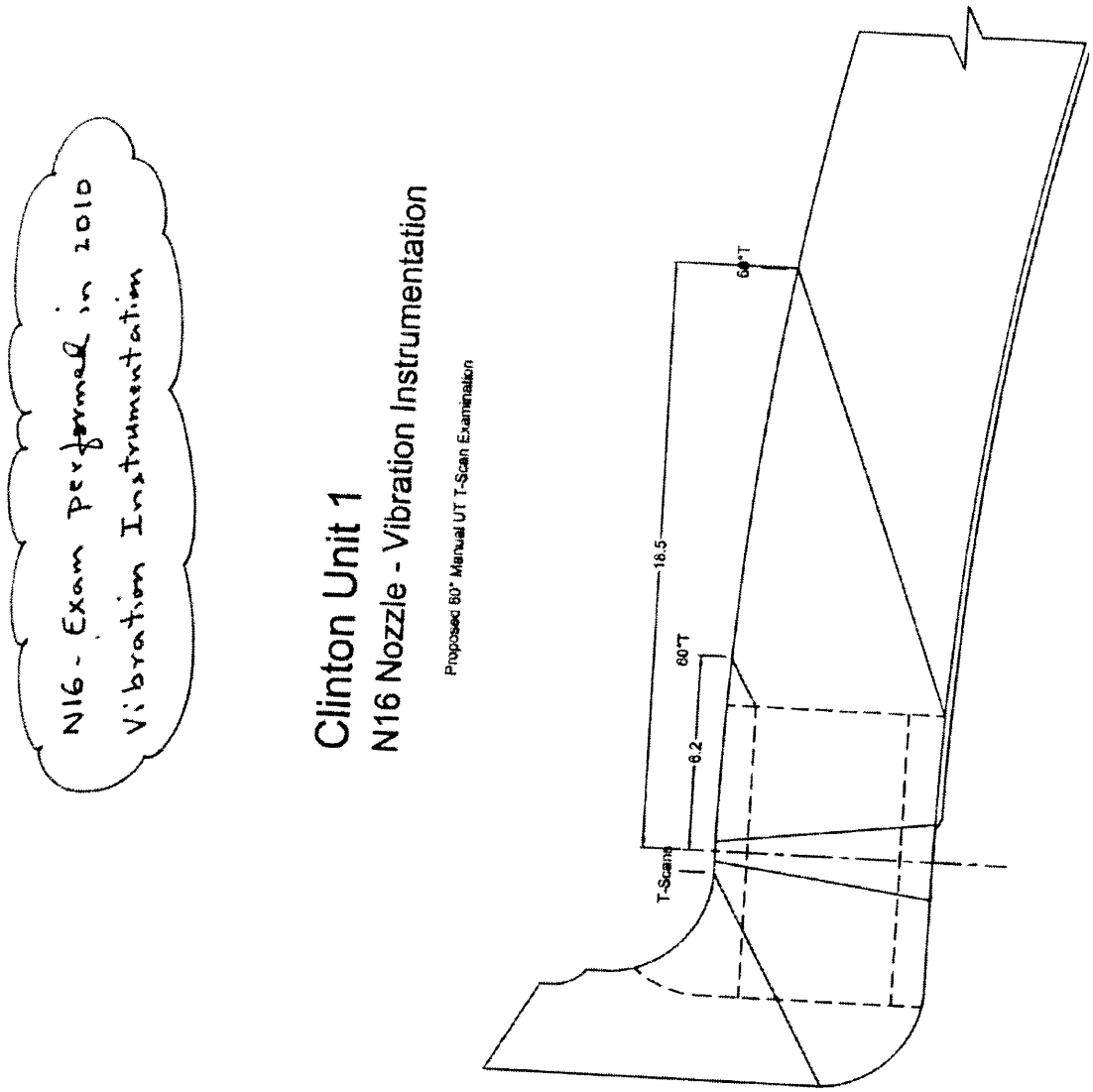

Figure 45: Weld N16 Exam Coverage

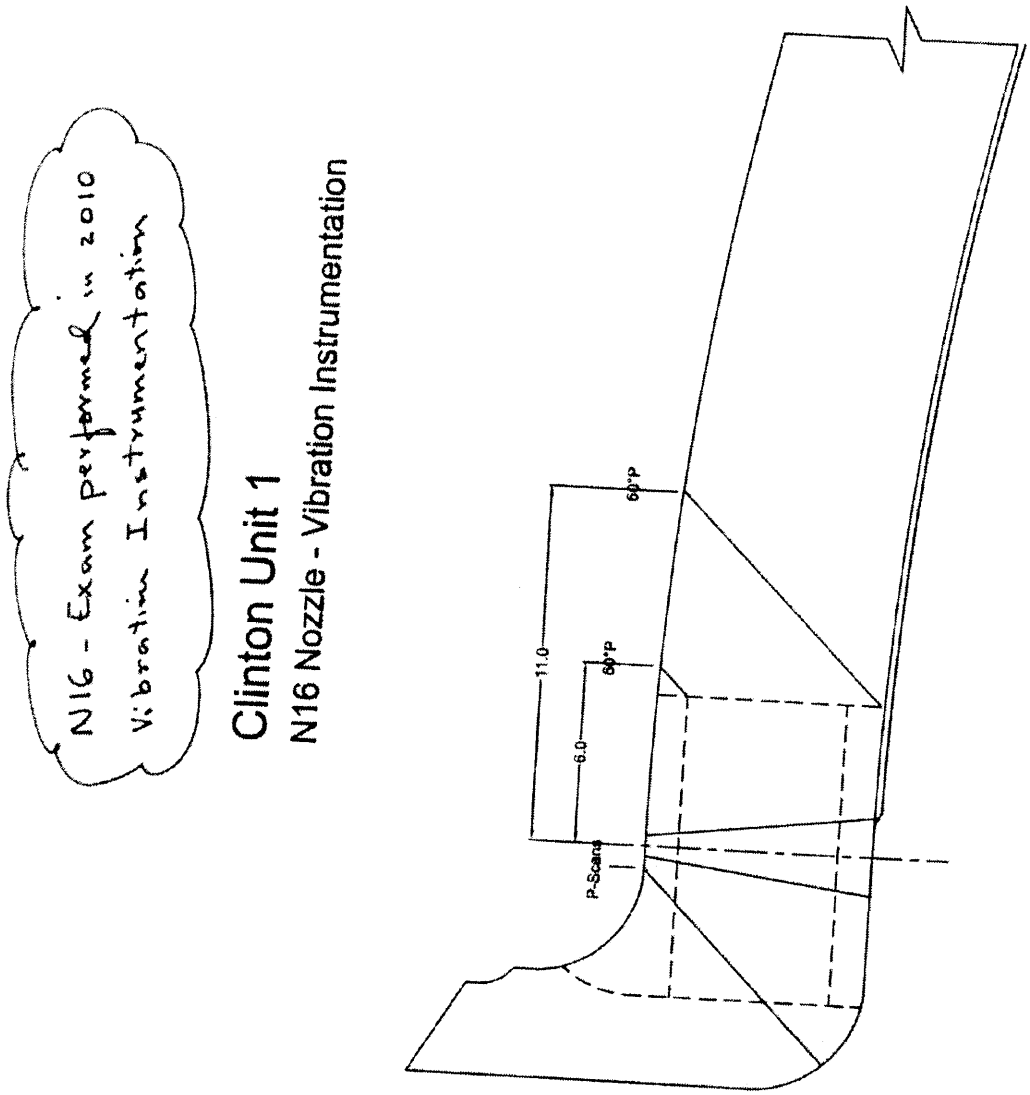

Figure 46: Weld N16 Exam Coverage

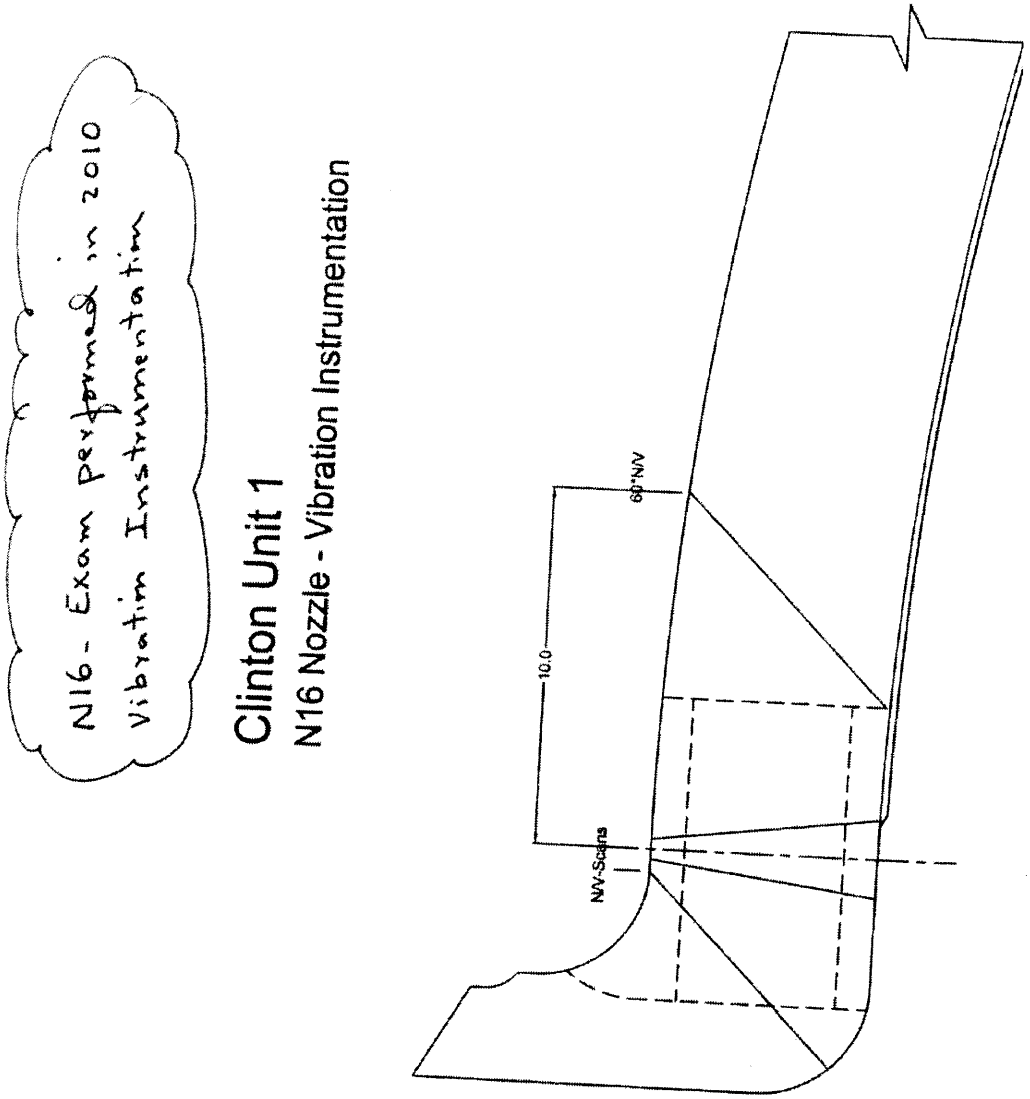

Figure 47: Weld N16 Exam Coverage