NAC INTERNATIONAL

Atlanta Corporate Headquarters
3930 East Jones Bridge Road, Suite 200
Norcross, GA 30092
Phone 770-447-1144
Fax 770-447-1797
www.nacintl.com

February 27, 2008

U.S. Nuclear Regulatory Commission
11555 Rockville Pike
Rockville, MD 20852-2738

Attn: Document Control Desk

Subject: Submittal of a Supplement to an Amendment Request for Certificate of Compliance (CoC) No. 9225 for the NAC-LWT Cask to Incorporate TRIGA LEU Cluster Rods as Authorized Contents

Docket No. 71-9225

Reference:
1. Safety Analysis Report (SAR) for the NAC Legal Weight Truck Cask, Revision 38, NAC International, November 2007
2. Model No. NAC-LWT Package, U.S. Nuclear Regulatory Commission (NRC) Certificate of Compliance (CoC) No. 9225, Revision 46
3. Submittal of a Request for an Amendment of Certificate of Compliance (CoC) No. 9225 for the NAC-LWT Cask to Incorporate TRIGA LEU Cluster Rods as Authorized Contents, NAC International, January 17, 2008

NAC International (NAC) herewith submits a supplement to our Reference 3 request for approval of an Amendment to Reference 1. The attached supplement, NAC-LWT SAR, Revision LWT-08B, was prepared to incorporate the changes discussed and agreed to between NAC and the NRC Spent Fuel Storage and Transportation staff during the February 6, 2008 post-application meeting and subsequent conference calls. The supplement incorporates the following major changes:

- The requirement that damaged TRIGA fuel elements and fuel cluster rods and fuel debris be transported in sealed damaged fuel canisters (DFCs) and loaded into NAC-LWT packaging configured and tested to provide a leaktight containment.

- The requirement that intact TRIGA cluster rods be loaded into TRIGA cluster rod inserts (a 4×4 tube array) prepositioned into the cell openings of the TRIGA fuel basket modules for transport. The inserts are nonstructural components intended only to assist in the loading process and to ensure that the design payload of up to 16 cluster rods can be loaded into each basket cell.

- Damaged TRIGA fuel elements and cluster rods are evaluated for loading in a sealed DFC. Therefore, as screened DFCs will no longer be authorized for the transport of damaged TRIGA fuel elements or fuel cluster rods, NAC Drawing Nos. 315-40-074, 315-40-075 and 315-40-076 have been deleted from the application.

ED20080022

NMSS01

NMSS

- NAC License Drawing Nos. 315-40-079 and 315-40-084 have been revised to present the authorized TRIGA fuel content transport arrangement, including the identification of allowable sealed DFCs, cluster rod inserts and fuel spacers. In addition, a note has been added to specify that for the transport of damaged TRIGA fuel or fuel debris in sealed DFCs, a leaktight containment configuration of the NAC-LWT is required. Editorial changes have also been made to NAC License Drawing No. 315-40-02 including the deletion of delta note 13, as specification of the port opening surface finish is not required to ensure a leaktight containment configuration.

- Chapters 1, 4, 7 and 8 have been modified, as required, to revise the definition of "damaged TRIGA fuel elements" and to specify the requirement that for the transport of damaged TRIGA fuel materials, a sealed DFC and a leaktight containment configuration are required. Chapter 6 has been revised to remove references in Sections 6.4.5.7 and 6.4.6.6 to screened cans. Lastly, two references have been added to Chapter 9 that are part of footnote 3 of Table 4.2-1.

This submittal includes eight copies of this transmittal letter and Revision LWT-08B changed pages to the Reference 1 SAR. As complete sections of the SAR are being sent to facilitate the review process, the text flow pages are identified as either LWT-08B or LWT-07G. Revision bars mark the SAR text changes on the Revision LWT-08B pages, so new or revised material can be readily identified. (For changes made by the LWT-07G amendment request, please refer to Reference 3.) The LWT-08B changed pages incorporate the supplemental information and the applicable evaluations performed to justify the additional changes. Attachment 1 contains a brief summary of the changes to the SAR for this supplement.

Minor editorial changes have been made throughout the document. These changes do not affect the technical content of this submittal or the existing information in Reference 1. The included List of Effective Pages identifies the current revision level of all pages in the Reference 1 SAR.

Consistent with NAC administrative practice, this proposed SAR revision is numbered to uniquely identify the applicable changed pages. Upon final acceptance of this application, the original LWT-07G and supplement LWT-08B changed pages will be reformatted and incorporated into the next revision of the NAC-LWT SAR.

In this supplemental amendment request, the proposed changes to the authorized contents are described in Chapter 1. The containment evaluation documenting the adequacy of the NAC-LWT packaging to transport the requested content conditions is presented in SAR Chapter 4. Chapter 6 has been revised to address the use of sealed, in place of screened, DFCs. Chapter 7 has been revised to address the operational and loading requirements for the intact and damaged LEU and HEU TRIGA cluster rod contents. Chapter 8 has been revised to incorporate additional requirements for the assembly and testing of an NAC-LWT to provide a leaktight containment boundary in accordance with the requirements of ANSI N14.5 - 1997. There are no changes to the Structural Evaluation (Chapter 2), the Thermal Evaluation (Chapter 3) or the Shielding Evaluation (Chapter 5).

The approval of the TRIGA LEU cluster rod contents and their addition to the authorized contents of the Reference 2 CoC is critical to permit the transport of additional foreign research reactor (FRR) fuel in support of the U.S. Department of Energy's (DOE) National Nuclear Security Administration FRR fuel acceptance program. The DOE has scheduled the loading of TRIGA LEU cluster rods at a research reactor in Romania in late spring of 2008. In order to meet the currently scheduled loading and transport dates, NAC requests approval of the enclosed amendment by April, 2008. This will allow NAC to obtain a U.S. Department of Transportation Certificate of Competent Authority for the revised NRC CoC and to submit the revised licensing documents to the affected foreign competent authorities for revalidation in a timely manner. NAC is proceeding with procurement of the revised TRIGA cluster rod inserts at risk to support the loading and transport campaign schedule.

If you have any comments or questions, please contact me on my direct line at 678-328-1274.

Sincerely,

Anthony L. Patko
Director, Licensing
Engineering

Attachment 1 – List of Changes, NAC-LWT SAR, Revision LWT-08B
Attachment 2 – List of Drawing Changes, NAC-LWT SAR, Revision LWT-08B

Enclosures

NAC INTERNATIONAL

Attachment 1

List of Changes, NAC-LWT SAR, Revision LWT-08B,

Supplement to the Amendment Request to Incorporate TRIGA LEU

Cluster Rods as Authorized Contents

Attachment 1

List of Changes, NAC-LWT SAR, Revision LWT-08B

Chapter 1

1. The following drawings were revised. (See Attachment 2 for a full description.)

   a. 315-40-02, to Rev. 22; Legal Weight Truck Cask Body Assembly Safety Analysis Report

   b. 315-40-079, to Rev. 5; Legal Weight Truck Transport Cask Assy., 120 TRIGA Fuel Elements or 480 Cluster Rods

   c. 315-40-084, to Rev. 4, Legal Weight Truck Transport Cask Assy., 140 TRIGA Elements

2. References to "damaged fuel can and failed fuel can" are now additionally identified as DFCs.

3. Revised the definition of the term "Damaged Fuel (TRIGA)" in Table 1.1-1.

4. References to "screened" DFCs were changed to "sealed" DFCs.

5. References to a "leaktight" configuration were also added.

Chapter 4

1. Added justification for additional fabrication leakage rate test for a leaktight containment configuration in Section 4.1.2.1.1.

2. Containment criteria were added in Section 4.2.3 for contents requiring a leaktight containment.

3. Damaged TRIGA fuel in DFCs was added to the containment requirements for hypothetical accident conditions in Section 4.3.

4. Revised Section 4.4 to remove special requirements from the NAC-LWT, including the deletion of Tables 4.4-1, 4.4-2 and 4.4-3.

Chapter 6

1. Section 6.4.5.6.3 was revised to specify a content of intact TRIGA elements.

2. Revised the nonpoisoned and poisoned basket subsections of Section 6.4.5.7 to remove references to "screened" DFCs. Also revised the nonpoisoned and poisoned basket subsections Section 6.4.6.6 to remove references to "screened" DFCs.

Attachment 1
List of Changes, NAC-LWT SAR, Revision LWT-08B (cont'd)

Chapter 7

1. Revised the operating procedures for sealed DFCs in Section 7.0.

2. Revised the procedure for loading TRIGA damaged fuel or fuel debris into a sealed DFC in Section 7.1.7.

3. Revised Table 7.3-1 to show the appropriate torque values for closure lid and port cover test port plugs.

Chapter 8

1. Section 8.1.3.1 was revised to specify the measured leakage rate for the various NAC-LWT contents.

2. Section 8.1.3.3 was revised to detail the acceptance criteria for fabrication and periodic leakage rate tests.

3. Section 8.2 was revised to include maintenance program information around damaged TRIGA fuel in DFCs requiring a leaktight containment boundary.

Chapter 9

1. Added two references to this chapter as shown on Page 9-3 originating from Table 4.2-1.

NAC INTERNATIONAL

Attachment 2

List of Drawing Changes, NAC-LWT SAR, Revision LWT-08B

Attachment 2

List of Drawing Changes, NAC-LWT SAR, Revision LWT-08B

1. Drawing No. 315-40-02, Revision 22:

a. Deleted delta note 13as specification of port opening surface finish is not required to ensure a leaktight containment configuration. The port is leaktight if it meets the leaktight test requirements of Chapter 8 of the SAR.

b. Deleted delta note 13 symbol next to items 12, 13 and 25 from BOM.

c. Added delta note 15 symbol next to items 12, 13 and 28 to BOM.

2. Drawing No. 315-40-079, Revision 5:

a. Sheet 1, added delta note 12 as follows: "CASK ASSEMBLY (ITEM 3) FOR TRANSPORT OF DAMAGED FUEL OR FUEL DEBRIS IN SEALED FAILED FUEL CANISTER SHALL BE PROVIDED WITH A LEAK TIGHT CONTAINMENT BOUNDARY."

b. Added delta note 12 symbol next to Item 3 to BOM.

c. Revised delta note 2 to add comma "," between fuel element and canister.

d. Changed the symbol of delta note 5 to a regular note 5.

e. Deleted delta note symbols 1, 2 and 4 from BOM area for Items 7, 10 and 11.

f. Deleted items 12, 13, 14 and 15 (screened DFCs) from BOM and associated delta notes 6, 7, 8 and 9.

g. Revised delta note 5 to change the beginning of the sentence from: "SCREENED DFC AND SEALED FAILED FUEL CANISTER ARE...." to "SEALED FAILED FUEL CANISTER IS...."

3. Drawing No. 315-40-084, Revision 4:

a. Sheet 1, Revised B.O.M. to add items 14, 15, 16 and 17 as follows:- B.O.M. #14, Qty A/R, Axial Fuel Spacer, 315-40-085-98;- B.O.M. #15, Qty A/R, Cluster Rod Insert, 315-40-096-99;- B.O.M. #16, A/R, SEALED FAILED FUEL CANISTER, 315-40-086-99,- B.O.M. #17, A/R, SEALED FAILED FUEL CANISTER, 315-40-086-98.

b. Added delta note 3 as follows: "INSTALL AXIAL FUEL SPACERS (ITEM 14) IN BASKET MODULE CELLS TO ADJUST FUEL ELEMENT, CANISTER OR CLUSTER ROD INSERT HEIGHT, AS REQUIRED, TO FACILITATE CONTENT HANDLING."

c. Added note 4 as follows: "MAXIMUM WEIGHT OF FUEL ASSEMBLY, SPACERS, INSERTS AND DAMAGED FUEL CANS, AS APPLICABLE, SHALL BE 80 LB. PER BASKET MODULE CELL."

d. Deleted note 1 and replaced with delta note 5 as follows: "CLUSTER ROD INSERT (ITEM 15) SHALL BE USED FOR THE LOADING OF TRIGA FUEL CLUSTER RODS. AXIAL SPACERS (ITEM 14) ARE REQUIRED IF CLUSTER ROD INSERTS ARE TO BE INSTALLED IN THE TOP BASKET MODULE (ITEM 6)."

e. Added delta note 6 as follows: "SEALED FAILED FUEL CANISTER IS NOT AUTHORIZED FOR PLACEMENT IN THE INTERMEDIATE MODULES (ITEM 5)."

f. Added delta note 7 as follows: "SEALED FAILED FUEL CANISTER (ITEM 16) TO BE LOADED IN THE BASE MODULE (ITEM 4) CONFIGURATION 1 & 2 OR IN TOP MODULE WITH AXIAL SPACER (ITEM 14) CONFIGURATION 1 ONLY."

g. Added delta note 8 as follows: "SEALED FAILED FUEL CANISTER (ITEM 17) TO BE LOADED IN TOP MODULE (ITEM 6) ONLY."

h. Added delta note 9 as follows: "CASK ASSEMBLY (ITEM 3) FOR TRANSPORT OF TRIGA DAMAGED FUEL OR FUEL DEBRIS IN SEALED FAILED FUEL CANISTERS SHALL BE PROVIDED WITH A LEAK TIGHT CONTAINMENT BOUNDARY."

i. Changed name of Item 9 to "TAMPER INDICATING DEVICE (TID)" INSTEAD OF "METAL CUP SEAL."

February 2008

Revision LWT-08B

NAC-LWT

Legal Weight Truck Cask System

SAFETY ANALYSIS REPORT

Volume 1 of 2

Docket No. 71-9225

NAC INTERNATIONAL

Atlanta Corporate Headquarters: 3930 East Jones Bridge Road, Norcross, Georgia 30092 USA
Phone 770-447-1144, Fax 770-447-1797, www.nacintl.com

List of Effective Pages

LIST OF EFFECTIVE PAGES

Chapter 1

1-i thru 1-ii ..... Revision LWT-07G
1-iii ..... Revision LWT-08B
1-iv ..... Revision LWT-07G
1-1 thru 1-5 ..... Revision LWT-08B
1.1-1 thru 1.1-3 ..... Revision LWT-08B
1.2-1 thru 1.2-3 ..... Revision LWT-07G
1.2-4 thru 1.2-12 ..... Revision LWT-08B
1.2-13 thru 1.2-49 ..... Revision LWT-07G
1.3-1 ..... Revision 38
1.4-1 ..... Revision 38
1.5-1 ..... Revision 38

73 drawings in the
Chapter 1 List of Drawings

Chapter 1 Appendices 1-A
through 1-G

Chapter 2

2-i thru 2-xxix ..... Revision 38
2-1 ..... Revision 38
2.1.1-1 thru 2.1.1-2 ..... Revision 38
2.1.2-1 thru 2.1.2-3 ..... Revision 38
2.1.3-1 thru 2.1.3-8 ..... Revision 38
2.2.1-1 thru 2.2.1-3 ..... Revision 38
2.3-1 ..... Revision 38
2.3.1-1 thru 2.3.1-13 ..... Revision 38
2.4-1 ..... Revision 38
2.4.1-1 ..... Revision 38
2.4.2-1 ..... Revision 38
2.4.3-1 ..... Revision 38
2.4.4-1 ..... Revision 38
2.4.5-1 ..... Revision 38
2.4.6-1 ..... Revision 38
2.5.1-1 thru 2.5.1-11 ..... Revision 38
2.5.2-1 thru 2.5.2-17 ..... Revision 38
2.6.1-1 thru 2.6.1-7 ..... Revision 38
2.6.2-1 thru 2.6.2-7 ..... Revision 38
2.6.3-1 ..... Revision 38
2.6.4-1 ..... Revision 38
2.6.5-1 thru 2.6.5-2 ..... Revision 38
2.6.6-1 ..... Revision 38
2.6.7-1 thru 2.6.7-136 ..... Revision 38
2.6.8-1 ..... Revision 38
2.6.9-1 ..... Revision 38
2.6.10-1 thru 2.6.10-15 ..... Revision 38
2.6.11-1 thru 2.6.11-12 ..... Revision 38
2.6.12-1 thru 2.6.12-95 ..... Revision 38
2.7-1 ..... Revision 38
2.7.1-1 thru 2.7.1-118 ..... Revision 38
2.7.2-1 thru 2.7.2-24 ..... Revision 38
2.7.3-1 thru 2.7.3-5 ..... Revision 38
2.7.4-1 ..... Revision 38
2.7.5-1 thru 2.7.5-5 ..... Revision 38
2.7.6-1 thru 2.7.6-4 ..... Revision 38
2.7.7-1 thru 2.7.7-72 ..... Revision 38
2.8-1 ..... Revision 38
2.9-1 thru 2.9-14 ..... Revision 38
2.10.1-1 thru 2.10.1-3 ..... Revision 38
2.10.2-1 thru 2.10.2-49 ..... Revision 38
2.10.3-1 thru 2.10.3-18 ..... Revision 38
2.10.4-1 thru 2.10.4-11 ..... Revision 38
2.10.5-1 ..... Revision 38
2.10.6-1 thru 2.10.6-19 ..... Revision 38
2.10.7-1 thru 2.10.7-66 ..... Revision 38
2.10.8-1 thru 2.10.8-68 ..... Revision 38
2.10.9-1 thru 2.10.9-9 ..... Revision 38
2.10.10-1 thru 2.10.10-97 ..... Revision 38
2.10.11-1 thru 2.10.11-10 ..... Revision 38

LIST OF EFFECTIVE PAGES (Continued)

2.10.12-1 thru 2.10.12-31 ..... Revision 38
2.10.13-1 thru 2.10.13-17 ..... Revision 38
2.10.14-1 thru 2.10.14-38 ..... Revision 38
2.10.15-1 thru 2.10.15-10 ..... Revision 38

Chapter 3
3-i thru 3-v ..... Revision 38
3.1-1 thru 3.1-2 ..... Revision 38
3.2-1 thru 3.2-11 ..... Revision 38
3.3-1 ..... Revision 38
3.4-1 thru 3.4-81 ..... Revision 38
3.5-1 thru 3.5-32 ..... Revision 38
3.6-1 thru 3.6-12 ..... Revision 38

Chapter 4
4-i thru 4-ii ..... Revision LWT-07G
4-iii ..... Revision LWT-08B
4-iv ..... Revision LWT-07G
4.1-1 thru 4.1-3 ..... Revision LWT-08B
4.2-1 thru 4.2-13 ..... Revision LWT-08B
4.3-1 thru 4.3-6 ..... Revision LWT-08B
4.3-7 ..... Revision LWT-07G
4.4-1 ..... Revision LWT-08B
4.5-1 thru 4.5-28 ..... Revision 38
4.5-29 thru 4.5-53 ..... Revision LWT-07G
4.5-54 thru 4.5-90 ..... Revision LWT-07G

Chapter 5
5-i thru 5-x ..... Revision LWT-07G
5-1 ..... Revision 38
5-2 ..... Revision 38
5-3 ..... Revision 38
5.1.1-1 thru 5.1.1-17 ..... Revision LWT-07G
5.2.1-1 thru 5.2.1-7 ..... Revision 38
5.3.1-1 ..... Revision 38
5.3.2-1 ..... Revision 38
5.3.3-1 thru 5.3.3-8 ..... Revision 38
5.3.4-1 thru 5.3.4-19 ..... Revision 38
5.3.5-1 thru 5.3.5-4 ..... Revision 38
5.3.6-1 thru 5.3.6-18 ..... Revision 38
5.3.7-1 thru 5.3.7-15 ..... Revision LWT-07G
5.3.8-1 thru 5.3.8-24 ..... Revision 38
5.3.9-1 thru 5.3.9-26 ..... Revision 38
5.3.10-1 thru 5.3.10-14 ..... Revision 38
5.3.11-1 thru 5.3.11-48 ..... Revision 38
5.3.12-1 thru 5.3.12-26 ..... Revision 38
5.3.13-1 thru 5.3.13-17 ..... Revision 38
5.3.14-1 thru 5.3.14-20 ..... Revision 38
5.3.15-1 thru 5.3.15-9 ..... Revision 38
5.3.16-1 thru 5.3.16-5 ..... Revision 38
5.3.17-1 thru 5.3.17-8 ..... Revision 38
5.4.1-1 thru 5.4.1-6 ..... Revision 38

Chapter 6
6-i thru 6-xi ..... Revision LWT-07G
6-1 ..... Revision 38
6.1-1 thru 6.1-4 ..... Revision 38
6.2-1 ..... Revision 38
6.2.1-1 thru 6.2.1-3 ..... Revision 38
6.2.2-1 thru 6.2.2-3 ..... Revision 38
6.2.3-1 thru 6.2.3-7 ..... Revision 38
6.2.4-1 ..... Revision 38
6.2.5-1 thru 6.2.5-5 ..... Revision 38
6.2.6-1 thru 6.2.6-3 ..... Revision LWT-07G
6.2.7-1 thru 6.2.7-2 ..... Revision 38
6.2.8-1 thru 6.2.8-3 ..... Revision 38
6.2.9-1 thru 6.2.9-4 ..... Revision 38
6.2.10-1 thru 6.2.10-3 ..... Revision 38
6.2.11-1 thru 6.2.11-3 ..... Revision 38
6.2.12-1 thru 6.2.12-4 ..... Revision 38

LIST OF EFFECTIVE PAGES (Continued)

6.3.1-1 thru 6.3.1-5 ..... Revision 38
6.3.2-1 thru 6.3.2-4 ..... Revision 38
6.3.3-1 thru 6.3.3-8 ..... Revision 38
6.3.4-1 thru 6.3.4-9 ..... Revision 38
6.3.5-1 thru 6.3.5-12 ..... Revision LWT-07G
6.3.6-1 thru 6.3.6-9 ..... Revision 38
6.3.7-1 thru 6.3.7-4 ..... Revision 38
6.3.8-1 thru 6.3.8-7 ..... Revision 38
6.3.9-1 thru 6.3.9-7 ..... Revision 38
6.4.1-1 thru 6.4.1-10 ..... Revision 38
6.4.2-1 thru 6.4.2-10 ..... Revision 38
6.4.3-1 thru 6.4.3-33 ..... Revision 38
6.4.4-1 thru 6.4.4-24 ..... Revision 38
6.4.5-1 thru 6.4.5-32 .....Revision LWT-08B
6.4.6-1 thru 6.4.6-7 ..... Revision LWT-07G
6.4.6-8 .....Revision LWT-08B
6.4.6-9 thru 6.4.6-23 ..... Revision LWT-07G
6.4.7-1 thru 6.4.7-14 ..... Revision 38
6.4.8-1 thru 6.4.8-14 ..... Revision 38
6.4.9-1 thru 6.4.9-10 ..... Revision 38
6.4.10-1 thru 6.4.10-18 ..... Revision 38
6.5.1-1 thru 6.5.1-13 ..... Revision 38
6.5.2-1 thru 6.5.2-4 ..... Revision 38
6.5.3-1 thru 6.5.3-2 ..... Revision 38

Appendix 6.6

6.6-i thru 6.6-iii ..... Revision LWT-07G
6.6-1 ..... Revision 38
6.6.1-1 thru 6.6.1-111 ..... Revision 38
6.6.2-1 thru 6.6.2-56 ..... Revision 38
6.6.3-1 thru 6.6.3-73 ..... Revision 38
6.6.4.-1 thru 6.6.4-77 ..... Revision 38
6.6.5-1 thru 6.6.5-101 ..... Revision 38
6.6.6-1 thru 6.6.6-158 ... Revision LWT-07G
6.6.7-1 thru 6.6.7-84 ..... Revision 38
6.6.8-1 thru 6.6.8-189 .....Revision 38
6.6.9-1 thru 6.6.9-52 .....Revision 38
6.6.10-1 thru 6.6.10-33 .....Revision 38
6.6.11-1 thru 6.6.11-47 .....Revision 38
6.6.12-1 thru 6.6.12-20 .....Revision 38
6.6.13-1 thru 6.6.13-22 .....Revision 38
6.6.14-1 thru 6.6.14-7 .....Revision 38

Chapter 7

7-i thru 7-ii.....Revision LWT-07G
7.1-1 thru 7.1-11 ..... Revision LWT-08B
7.1-12 thru 7.1-32 ..... Revision LWT-07G
7.1-33 thru 7.1-51 ..... Revision LWT-08B
7.2-1 thru 7.2.1-12 .....Revision 38
7.3-1 thru 7.3-2 ..... Revision LWT-08B

Chapter 8

8-i.....Revision 38
8.1-1 thru 8.1-11 ..... Revision LWT-08B
8.2-1 thru 8.2-4 ..... Revision LWT-08B
8.3-1 thru 8.3-5 .....Revision 38

Chapter 9

9-i..... Revision LWT-08B
9-1 thru 9-10 ..... Revision LWT-08B

Chapter 1

Table of Contents

1 GENERAL INFORMATION 1-1

1.1 Introduction 1.1-1

1.2 Package Description 1.2-1
1.2.1 Packaging 1.2-1
1.2.2 Operational Features 1.2-4
1.2.3 Contents of Packaging 1.2-5

1.3 Quality Assurance 1.3-1

1.4 License Drawings 1.4-1

1.5 Unclassified DOE Reference Documents and Drawings 1.5-1

Chapter 1 Appendices

Appendix 1-A – TTQP-1-015, "Description of the Tritium-Producing Burnable Absorber Rod for the Commercial Light Water Reactor," Revision 14

Appendix 1-B – TTQP-1-091, "Unclassified TPBAR Releases, Including Tritium," Revision 11

Appendix 1-C – TTQP-1-111, "Unclassified Bounding Source Term, Radionuclide Concentrations, Decay Heat, and Dose Rates for the Production TPBAR," Revision 5

Appendix 1-D – DOE Drawing H-3-307845, "Production TPBAR Reactor Interface Dimensions Watts Bar," Revision 10, Sheet 1 of 2

Appendix 1-E – DOE Drawing H-3-308875, "Production TPBAR Reactor Interface Dimensions Sequoyah," Revision 5, Sheet 1 of 2

Appendix 1-F – DOE Drawing H-3-310568, "Mark 8 Multi-Pencil TPBAR – Watts Bar Reactor Interface," Revision 0, Sheet 1 of 2

Appendix 1-G – PNNL Letter, TTP-06-056, Subject: Exposure of Shipping Cask to Tritium, February 21, 2006

List of Figures

Figure 1.2.3-1 Aluminum Clad TRIGA Fuel Element 1.2-18
Figure 1.2.3-2 Aluminum Clad Instrumented Fuel Element 1.2-19
Figure 1.2.3-3 Stainless Steel Clad TRIGA Fuel Element 1.2-20
Figure 1.2.3-4 Stainless Steel Clad Instrumented Fuel Element 1.2-21
Figure 1.2.3-5 Standard Fuel Follower Control Rod Element 1.2-22
Figure 1.2.3-6 TRIGA Fuel Cluster and Rod Details 1.2-23
Figure 1.2.3-7 HTGR Fuel Handling Unit 1.2-24
Figure 1.2.3-8 RERTR Fuel Handling Unit 1.2-25
Figure 1.2.3-9 Typical TPBAR Assembly 1.2-26
Figure 1.2.3-10 TPBAR Consolidation Canister Sketch 1.2-27
Figure 1.2.3-11 Failed PWR/BWR Fuel Rod Capsule 1.2-28
Figure 1.2.3-12 NAC-LWT with TPBAR Consolidation Canister Payload 1.2-29
Figure 1.2.3-13 PULSTAR Fuel Assembly 1.2-30
Figure 1.2.3-14 Spiral Fuel Assembly Cross-Section Sketch 1.2-31
Figure 1.2.3-15 MOATA Plate Bundle Sketches 1.2-32
Figure 1.2.3-16 TPBAR Waste Container and Extension Weldment Sketch 1.2-33
Figure 1.2.3-17 NAC-LWT with TPBAR Waste Container Payload 1.2-34

List of Tables

Table 1.1-1 Terminology and Notation 1-3
Table 1.2-1 Characteristics of Design Basis TRIGA Fuel Elements Acceptable for Loading in the Poisoned TRIGA Basket 1.2-35
Table 1.2-2 Characteristics of Design Basis TRIGA Fuel Elements Acceptable for Loading in the Nonpoisoned TRIGA Basket 1.2-36
Table 1.2-3 Characteristics of Design Basis TRIGA Fuel Cluster Rods 1.2-37
Table 1.2-4 Fuel Characteristics 1.2-38
Table 1.2-5 PWR Fuel Characteristics 1.2-41
Table 1.2-6 BWR Fuel Characteristics 1.2-42
Table 1.2-7 Characteristics of General Atomics Irradiated Fuel Material (GA IFM) 1.2-43
Table 1.2-8 Typical Production TPBAR Characteristics 1.2-44
Table 1.2-9 PULSTAR Fuel Characteristics 1.2-45
Table 1.2-10 Spiral Fuel Assembly Characteristics 1.2-46
Table 1.2-11 MOATA Plate Bundle Characteristics 1.2-47
Table 1.2-12 Typical TPBAR Segment Characteristics in Waste Container 1.2-48
Table 1.2-13 Solid, Irradiated Hardware Characteristics 1.2-49

List of Drawings

315-40-01		Rev 6	Legal Weight Truck Transport Cask Assembly
315-40-02	Sheets 1 – 2	Rev 22	NAC-LWT Cask Body Assembly
315-40-03	Sheets 1 – 6	Rev 6*	NAC-LWT Transport Cask Body
315-40-03	Sheets 1 – 7	Rev 22	NAC-LWT Transport Cask Body
315-40-04		Rev 10	NAC-LWT Transport Cask Lid Assembly
315-40-05		Rev 9	NAC-LWT Transport Cask Upper Impact Limiter
315-40-06		Rev 9	NAC-LWT Transport Cask Lower Impact Limiter
315-40-08	Sheets 1 – 5	Rev 17	NAC-LWT Transport Cask Parts Detail
315-40-09		Rev 2	NAC-LWT PWR Basket Spacer
315-40-10	Sheets 1 – 2	Rev 7	NAC-LWT Cask PWR Basket
315-40-11		Rev 2	NAC-LWT BWR Fuel Basket Assembly
315-40-12		Rev 3	NAC-LWT Metal Fuel Basket Assembly
315-40-045		Rev 4	Weldment, 7 Element Basket, 42 MTR Fuel Base Module
315-40-046		Rev 4	Weldment, 7 Element Basket, 42 MTR Fuel Intermediate Module
315-40-047		Rev 4	Weldment, 7 Element Basket, 42 MTR Fuel Top Module
315-40-048		Rev 3	Legal Weight Truck Transport Cask Assembly, 42 MTR Element
315-40-049		Rev 4	Weldment, 7 Element Basket, 28 MTR Fuel Base Module
315-40-050		Rev 4	Weldment, 7 Element Basket, 28 MTR Fuel Intermediate Module
315-40-051		Rev 4	Weldment, 7 Element Basket, 28 MTR Fuel Top Module
315-40-052		Rev 3	Legal Weight Truck Transport Cask Assembly, 28 MTR Element
315-40-070		Rev 3	Weldment, 7 Cell Basket, TRIGA Fuel Base Module
315-40-071		Rev 3	Weldment, 7 Cell Basket, TRIGA Fuel Intermediate Module
315-40-072		Rev 3	Weldment, 7 Cell Basket, TRIGA Fuel Top Module
315-40-079		Rev 5	Legal Weight Truck Transport Cask Assy, 120 TRIGA Fuel Elements or 480 Cluster Rods
315-040-080		Rev 2	Weldment, 7 Cell Poison Basket, TRIGA Fuel Base Module
315-040-081		Rev 2	Weldment, 7 Cell Poison Basket, TRIGA Fuel Intermediate Module
315-040-082		Rev 2	Weldment, 7 Cell Poison Basket, TRIGA Fuel Top Module
315-040-083		Rev 0	Spacer, LWT Cask Assembly, TRIGA Fuel
315-40-084		Rev 4	Legal Weight Truck Transport Cask Assy, 140 TRIGA Elements
315-40-085		Rev 0	Axial Fuel and Cell Block Spacers, MTR and TRIGA Fuel Baskets, NAC-LWT Cask
315-40-086		Rev 1	Assembly, Sealed Failed Fuel Can, TRIGA Fuel
315-40-087		Rev 5	Canister Lid Assembly, Sealed Failed Fuel Can, TRIGA Fuel
315-40-088		Rev 2	Canister Body Assembly, Sealed Failed Fuel Can, TRIGA Fuel
315-40-090		Rev 2	Weldment, 7 Element Basket, 35 MTR Fuel Base Module
315-40-091		Rev 2	Weldment, 7 Element Basket, 35 MTR Fuel Intermediate Module
315-40-092		Rev 2	Weldment, 7 Element Basket, 35 MTR Fuel Top Module
315-40-094		Rev 4	Legal Weight Truck Transport Cask Assembly, 35 MTR Element
315-40-096		Rev 3	Fuel Cluster Rod Insert, TRIGA Fuel
315-40-098	Sheets 1 - 2	Rev 3	Can Assembly, LWT Pin Shipment
315-40-099	Sheets 1 - 3	Rev 3	Can Weldment, PWR/BWR Transport Canister

* Packaging Unit Nos. 1, 2, 3, 4 and 5 are constructed in accordance with this revision of drawing.

List of Drawings (continued)

315-40-100	Sheets 1 - 3	Rev 3	Lids, PWR/BWR Transport Canister
315-40-101		Rev 0	4 X 4 Insert, PWR/BWR Transport Canister
315-40-102		Rev 1	5 X 5 Insert, PWR/BWR Transport Canister
315-40-103		Rev 0	Pin Spacer, PWR/BWR Transport Canister
315-40-104	Sheets 1 - 2	Rev 2	Legal Weight Truck Transport Cask Assy, PWR Transport Canister
315-40-105	Sheets 1 - 2	Rev 3	PWR Insert PWR/BWR Transport Canister
315-40-106	Sheets 1 - 3	Rev 1	MTR Plate Canister, LWT Cask
315-40-108	Sheets 1 - 3	Rev 1	Weldment, 7 Cell Basket, Top Module, DIDO Fuel
315-40-109	Sheets 1 - 3	Rev 1	Weldment, 7 Cell Basket, Intermediate Module, DIDO Fuel
315-40-110	Sheets 1 - 3	Rev 1	Weldment, 7 Cell Basket, Base Module, DIDO Fuel
315-40-111		Rev 1	Legal Weight Truck, Transport Cask Assy, DIDO Fuel
315-40-113		Rev 0	Spacers, Top Module, DIDO Fuel
315-40-120	Sheets 1 - 3	Rev 2	Top Module, General Atomics IFM, LWT Cask
315-40-123	Sheets 1 - 2	Rev 1	Spacer, General Atomics IFM, LWT Cask
315-40-124		Rev 1	Transport Cask Assembly, General Atomics IFM, LWT Cask
315-40-125	Sheets 1 - 3	Rev 3	Transport Cask Assembly, Framatome/EPRI, LWT Cask
315-40-126	Sheets 1 - 2	Rev 2	Weldments, Framatome/EPRI, LWT Cask
315-40-127	Sheets 1 - 2	Rev 2	Spacer Assembly, TPBAR Shipment, LWT Cask
315-40-128	Sheets 1 - 2	Rev 2	Legal Weight Truck, Transport Cask Assy, TPBAR Shipment
032230		Rev A	RERTR Secondary Enclosure, General Atomics
032231		Rev A	HTGR Secondary Enclosure, General Atomics
032236		Rev B	RERTR Primary Enclosure, General Atomics
032237		Rev B	HTGR Primary Enclosure, General Atomics
315-40-129		Rev 1	Canister Body Assembly, Failed Fuel Can, PULSTAR
315-40-130		Rev 1	Assembly, Failed Fuel Can, PULSTAR
315-40-133	Sheets 1 - 2	Rev 1	Transport Cask Assembly, PULSTAR Shipment, LWT Cask
315-40-134		Rev 1	Body Weldment, Screened Fuel Can, PULSTAR Fuel
315-40-135		Rev 1	Assembly, Screened Fuel Can, PULSTAR Fuel
315-40-139		Rev 0	Legal Weight Truck Transport Cask Assy, ANSTO Fuel
315-40-140	Sheets 1 - 2	Rev 0	Weldment, 7 Cell Basket, Top Module, ANSTO Fuel
315-40-141	Sheets 1 - 2	Rev 0	Weldment, 7 Cell Basket, Intermediate Module, ANSTO Fuel
315-40-142	Sheets 1 - 2	Rev 0	Weldment, 7 Cell Basket, Base Module, ANSTO Fuel
315-40-145		Rev 0	Irradiated Hardware Lid Spacer Assembly, LWT Cask

1 GENERAL INFORMATION

This chapter of the NAC International, Legal Weight Truck spent fuel shipping cask (NAC-LWT) Safety Analysis Report (SAR) presents a general introduction to, and description of, the NAC-LWT cask. Terminology used throughout this report is presented in Table 1.1-1.

Shipment of the NAC-LWT cask by truck, ISO container, and/or by railcar, as a Type B(U)F-96 package, as defined in 10 CFR 71.4, is authorized for the following contents:

- PWR and BWR fuel assemblies[1];
- MTR fuel assemblies and plates;
- DIDO fuel assemblies, metallic fuel rods;
- 25 high burnup PWR and BWR fuel rods (including up to 14 fuel rods classified as damaged);
- TRIGA fuel elements and TRIGA fuel cluster rods;
- General Atomics (GA) High-Temperature Gas-Cooled Reactor (HTGR) and Reduced-Enrichment Research and Test Reactor (RERTR) Irradiated Fuel Materials (IFM);
- up to 700 PULSTAR fuel elements;
- spiral fuel assemblies; and
- MOATA plate bundles.

The authorized contents previously listed include both irradiated and unirradiated forms of the materials.

Irradiated hardware is also authorized to be shipped in the NAC-LWT cask by truck, ISO container, and/or by railcar, as a Type B(U)F-96 package, as defined in 10 CFR 71.4. Irradiated hardware is defined as solid, irradiated and contaminated fuel assembly structural or reactor internal component hardware, which may include fissile material, provided the quantity of fissile material does not exceed a Type A quantity and does not exceed the exemptions of 10 CFR 71.15, paragraphs (a), (b) and (c).

Shipment of the NAC-LWT cask by truck, ISO container, and/or by railcar, as a Type B(M)-96 package, as defined in 10 CFR 71.4, is also authorized for the following contents:

- up to 300 Tritium Producing Burnable Absorber Rods (TPBARs), of which two can be prefailed

In accordance with 10 CFR 71.59, the NAC-LWT cask is assigned a Criticality Safety Index (CSI) for criticality control of the approved contents as follows:

- 100 for PWR fuel assemblies;
- 33.4 for package with any number of canned PULSTAR fuel;

[1] NAC-LWT casks containing PWR and BWR fuel assemblies are to be transported on an open trailer with a personnel barrier.

- 12.5 for DIDO fuel assemblies and TRIGA payloads in a nonpoisoned basket and no canisters, or a canister loaded with up to two equivalent TRIGA elements;
- 5 for BWR fuel assemblies; and
- 0 for metallic fuels, spiral fuel assemblies, MOATA plate bundles, PWR and BWR rods, MTR fuel assemblies, TRIGA fuel elements and fuel cluster rods, GA IFM elements, and intact PULSTAR fuel elements.

TPBARs do not contain fissile material and criticality assessments are not required. Solid, irradiated and contaminated hardware contents could include fissile material not exceeding a Type A quantity and the exemptions of 10 CFR 71.15, paragraphs (a), (b) and (c). A CSI of 0 is assigned for these contents for documentation purposes.

The estimated Transport Index (TI) for shielding for the prior listed contents is shown in Table 5.1.1-1. The actual TI for individual shipments will be determined in accordance with 10 CFR 71.4 by the licensee.

Table 1.1-1 Terminology and Notation

Cask Model	NAC-LWT
Package	The Packaging with its radioactive contents (payload), as presented for transportation (10 CFR 71.4). Within this report, the Package is denoted as the NAC-LWT cask or simply as the cask.
Packaging	The assembly of components necessary to ensure compliance with packaging requirements (10 CFR 71.4). Within this report, the Packaging is denoted as the NAC-LWT cask.
NAC-LWT Cask	This packaging consists of a spent-fuel shipping cask body and closure lid with energy absorbing impact limiters.
Contents (Payload)	• 1 PWR assembly • up to 2 BWR assemblies • up to 25 PWR or BWR rods (including high burnup fuel rods and up to 14 fuel rods classified as damaged) • up to 42 MTR fuel elements (including plates) • up to 42 DIDO fuel assemblies • up to 15 sound (cladding intact) metallic fuel rods • up to 9 damaged metallic fuel rods or 3 severely damaged metallic fuel rods in filters • up to 140 intact or damaged TRIGA fuel elements/debris • up to 560 intact or damaged TRIGA fuel cluster rods • 2 GA IFM packages • up to 300 TPBARs (including up to 2 prefailed TPBARs) • up to 55 TPBARs segmented into individual segments and segmentation debris • up to 700 intact or damaged PULSTAR fuel elements in either assembly or element form, including fuel debris • up to 42 intact spiral fuel assemblies (also referred to as Mark III spiral fuel). Spiral fuel assemblies may be cropped. • up to 42 intact MOATA plate bundles • any combination of individual ANSTO basket modules containing either spiral fuel assemblies or MOATA plate bundles up to a total of 42 assemblies/bundles • irradiated hardware
Impact Limiters	Aluminum honeycomb energy absorbers located at the ends of the cask.

Table 1.1-1 Terminology and Notation (cont'd)

Intact LWR Fuel (Assembly or Rod)	Spent nuclear fuel that is not Damaged LWR Fuel, as defined herein. To be classified as intact, fuel must meet the criteria for both intact cladding and structural integrity. An intact fuel assembly can be handled using normal handling methods, and any missing fuel rods have been replaced by solid filler rods that displace a volume equal to, or greater than, that of the original fuel rod.
Damaged LWR Fuel (Assembly or Rod)	Spent nuclear fuel that includes any of the following conditions that result in either compromise of cladding confinement integrity or recognition of fuel assembly geometry. 1. The fuel contains known or suspected cladding defects greater than a pinhole leak or a hairline crack that have the potential for release of significant amounts of fuel particles. 2. The fuel assembly: i. is damaged in such a manner as to impair its structural integrity; ii. has missing or displaced structural components such as grid spacers; iii. is missing fuel pins that have not been replaced by filler rods that displace a volume equal to, or greater than, that of the original fuel rod; iv. cannot be handled using normal handling methods. 3. The fuel is no longer in the form of an intact fuel assembly and consists of, or contains, debris such as loose pellets, rod segments, etc.
Damaged Fuel (TRIGA)	TRIGA fuel (elements and cluster rods) with known or suspected clad breach (i.e., cladding defects that permit the release of gas from the interior of the rod and/or allow water intrusion into the clad to fuel gap while submerged).
Fuel Debris (TRIGA)	TRIGA damaged fuel that does not maintain its structural integrity, including fuel particles, fuel debris, and broken fuel rods.
TPBAR	Tritium Producing Burnable Absorber Rod

Table 1.1-1 Terminology and Notation (cont'd)

Irradiated Fuel Material (IFM)	High-Temperature Gas-Cooled Reactor (HTGR/IFM) and Reduced-Enrichment Research and Test Reactor (RERTR/IFM) type TRIGA fuel entities produced by General Atomics.
PULSTAR Fuel Element	PULSTAR fuel rod. May be contained in either assembly, rod holder or can form for shipment. PULSTAR fuel elements may be intact or damaged.
Damaged PULSTAR Fuel Element	PULSTAR fuel rods having cladding failures greater than hairline cracks or pinhole leaks. The damaged fuel definition for PULSTAR fuel elements includes fuel debris. Damaged PULSTAR fuel elements may also be referred to as failed and must be transported in either of two types of PULSTAR cans.
Irradiated Hardware	Solid, irradiated and contaminated fuel assembly structural or reactor internal component hardware, which may include fissile material, provided the quantity of fissile material does not exceed a Type A quantity and does not exceed the exemptions of 10 CFR 71.15, paragraphs (a), (b) and (c). Authorized quantity of irradiated hardware and components is limited to 4,000 lbs (including spacers, dunnage and containers) and a gamma source term as defined in Table 1.2-13.

1.1 Introduction

The NAC-LWT spent-fuel shipping cask has been developed by NAC International (NAC) as a safe means of transporting radioactive materials authorized as approved contents. The cask design is optimized for legal weight over the road transport, with a gross weight of less than 80,000 pounds. The cask provides maximum safety during the loading, transport, and unloading operations required for spent-fuel shipment. The NAC-LWT cask assembly is composed of a package that provides a containment vessel that prevents the release of radioactive material. The actual containment boundary provided by the package consists of a 4.0-inch thick bottom plate, a 0.75-inch thick, 13.375-inch inner diameter shell, an upper ring forging, and an 11.3-inch thick closure lid. The cask lid closure is accomplished using twelve, 1-inch diameter bolts. The cask has an outer shell, 1.20 inches thick, to protect the containment shell and also to enclose the 5.75-inch thick lead gamma shield. Neutron shielding is provided by a 5.0-inch thick neutron shield tank with a 0.24-inch (6mm) thick outer wall, containing a water/ethylene glycol mixture and 1.0 minimum weight percent (wt %) boron (58 wt % ethylene glycol; 39 wt % demineralized water; 3 wt % potassium tetraborate [$K_2B_4O_7$]). The neutron shield tank system includes an expansion tank to permit the expansion and contraction of the shield tank liquid without compromising the shielding or overstressing the shield tank structure. Aluminum honeycomb impact limiters are attached to each end of the cask to absorb kinetic energy developed during a cask drop, and limit the consequences of normal operations and hypothetical accident events.

The NAC-LWT is a legal weight truck cask designed to transport the following contents:

- 1 PWR assembly;
- up to 2 BWR assemblies;
- up to 15 sound metallic fuel rods;
- up to 42 MTR fuel elements;
- up to 42 DIDO fuel assemblies;
- up to 25 high burnup PWR fuel rods (including up to 14 rods classified as damaged);
- up to 25 high burnup BWR fuel rods (including up to 14 rods classified as damaged);
- up to 9 damaged metallic fuel rods;
- up to 3 severely damaged metallic fuel rods in filters;
- up to 140 TRIGA intact or damaged fuel elements/fuel debris ("TRIGA" is a Trademark of General Atomics);
- up to 560 TRIGA fuel cluster rods;
- 2 GA IFM packages;
- up to 300 TPBARs (of which two can be prefailed);
- up to 55 TPBARs segmented during post-irradiation examination (PIE), including segmentation debris; ,
- up to 700 PULSTAR fuel elements (intact or damaged);

- up to 42 spiral fuel assemblies;
- up to 42 MOATA plate bundles; or
- up to 4,000 lbs of solid, irradiated and contaminated hardware, which may include fissile material less than a Type A quantity and meeting the exemptions of 10 CFR 71.15, paragraphs (a), (b) and (c). Total allowed mass includes the weight of spacers, shoring and dunnage.

PWR or BWR fuel rods may be placed in a fuel rod insert (also referred to as a rod holder) or in a fuel assembly lattice. The lattice may be irradiated or unirradiated. Up to 14 of the fuel rods may be classified as damaged. Damaged fuel rods must be placed in a rod holder. Damaged fuel rods or rod sections may be encapsulated to facilitate handling prior to placement in the rod holder.

Damaged TRIGA fuel elements, cluster rods and fuel debris are required to be loaded in a sealed damaged fuel canister (DFC) and transported in a leaktight configuration NAC-LWT.

PULSTAR fuel elements may be configured as intact fuel assemblies, may be placed into a fuel rod insert, i.e., a 4×4 rod holder (intact elements only), or may be loaded into one of two can designs, designated as the PULSTAR screened fuel can or the PULSTAR failed fuel can. Damaged PULSTAR fuel elements and nonfuel components of PULSTAR fuel assemblies must be loaded into cans. PULSTAR fuel cans may only be loaded into the top or base module of the 28 MTR basket assembly. Intact PULSTAR fuel assemblies and intact PULSTAR fuel elements in a TRIGA fuel rod insert may be loaded in any basket module.

Irradiated hardware may be loaded directly into the NAC-LWT cavity or preloaded into a canister or cage. Stainless steel dunnage may be used to limit the movement of the irradiated hardware within the cask cavity. The maximum gamma source term of the irradiated hardware shall be limited to that defined for the authorized PWR content condition as described in Chapter 5.

The NAC-LWT cask provides a testable containment for the contents during both normal operations and hypothetical accident conditions, satisfying the requirements of 10 CFR 71.51. Any number of NAC-LWT casks may be shipped at one time, each on its own vehicle.

NAC-LWT casks may be shipped in a closed International Shipping Organization (ISO) container when containing all fuel contents other than PWR and BWR fuel assemblies. NAC-LWT casks containing PWR and BWR fuel assemblies are to be transported on an open trailer with a personnel barrier.

The terminology of MTR, DIDO and TRIGA fuel elements will be used independent of whether the element contains low, medium or high enriched uranium (i.e., LEU, MEU or HEU), except when required for analysis or loading purposes.

1.2 Package Description

This section presents a basic description of the NAC-LWT cask and the contents that may be transported. Drawings of the cask are presented within Section 1.4.

1.2.1 Packaging

1.2.1.1 Gross Weight

Gross shipping weight of the NAC-LWT spent-fuel shipping cask is approximately 52,000 pounds for the package. When mounted on the transport vehicle, the cask and vehicle weight is less than the 80,000-pound maximum for legal weight transport. A summary of overall component weights, detailed in Table 2.2.1-1, is listed below:

Component	Weight (pounds)
Cask Body	43,412
Closure Lid and Bolts	941
Payload and Basket	4,000 maximum
Impact Limiters	2,855
Total	51,208
SAR Analysis Weight	52,000

1.2.1.2 Materials of Construction, Dimensions, and Fabrication

The NAC-LWT cask body consists of Type 304 stainless steel forgings and closure lid with Type XM-19 stainless steel shells. Type XM-19 is a high strength stainless steel and is used in the inner and outer structural shells, which are more highly stressed than other cask components that use the more common Type 304 stainless steel. A lead gamma shield and a borated ethylene glycol/water solution neutron shield are utilized for radiation shielding. The cask provides the containment boundary for the payload and also acts as an environmental barrier. The cask is protected at each end by energy absorbing impact limiters, which consist of crushable aluminum honeycomb material with a thin aluminum shell. The impact limiters also provide thermal insulation, which protects the lid seals during the hypothetical fire transient event, although this thermal protection is conservatively neglected in this report. The cask is passively cooled because of its relatively low maximum heat loading of 2.5 kilowatts (kW). The overall arrangement of the NAC-LWT cask and design details are presented in the drawings within Section 1.4. The cask body, closure lid, and impact limiters are more fully described in the following sections.

1.2.1.2.1 Cask Body

The cask body is fabricated from Type 304 and Type XM-19 stainless steel. A poured lead gamma shield forms an annulus 5.75 inches thick and 174.9 inches long. The lead is enclosed between a 0.75-inch thick, 13.375-inch inner diameter Type XM-19 stainless steel inner shell and a 1.20-inch thick, 28.78-inch outer diameter Type XM-19 stainless steel outer shell. The Type 304 stainless steel bottom end forging of the cask is 4.0 inches thick, and the bottom also contains a 3.0-inch thick, 20.75-inch diameter lead disk enclosed by a 3.5-inch thick Type 304 stainless steel end cover.

As discussed in Chapter 8, installation of the lead into the cask is done in a carefully controlled manner. Temperatures of the inner and outer shells are continuously monitored and controlled during the lead pour and cooldown process. In addition, the welds connecting the inner and outer shells to the bottom end forging are not made until after the cooldown process is complete and the entire cask has reached a uniform temperature. Dimensional checks for straightness and ovality are also made before and after lead pour.

The upper ring forging is a Type 304 stainless steel ring 14.25 inches thick. This forging is machined to accept the closure lid and contains the penetrations to the cask cavity for the vent and fill/drain valves. Four lifting trunnions are welded to the forging to permit cask lifting and handling with a nonredundant or redundant lifting yoke.

Neutron shielding is provided by an ethylene glycol/water jacket that surrounds the 1.20-inch thick Type XM-19 stainless steel outer shell and is designed to axially blanket the active fuel length of the more common light water reactor fuels. The neutron shield region is 5.00 inches thick and 164.0 inches long. The external surface of the shield tank is a 0.24-inch thick Type 304 stainless steel shell with 0.50-inch thick end plates. An expansion tank for the neutron shield is provided to allow for thermal expansion and contraction of the liquid and is connected to the shield tank by a siphon tube. The liquid contains a solution of ethylene glycol/water and 1.0 wt % boron, which is added to reduce the secondary gamma radiation component.

The inner shell, end forgings, and the closure lid establish a cask cavity that is 177.9 inches long and 13.375 inches in diameter.

The weight of the cask body is approximately 43,412 pounds. The overall length of the cask body is 199.8 inches, and the maximum outside diameter is 44.24 inches at the neutron shield expansion tank.

1.2.1.2.2 Closure Lid

The cask closure lid is a Type 304 stainless steel forging 11.3 inches thick. The lid is machined to recess into the upper ring forging when it is installed on the cask. The closure lid and upper end forging are machined to provide a series of steps to prevent radiation streaming through the gap between the components. The closure lid attaches to the cask using 12 bolts with a 1-inch diameter. The containment boundary seal is achieved by a metallic O-ring captured in a groove machined on the underside of the closure lid (a second O-ring is provided to allow seal testing of the containment boundary O-ring). The O-rings mate against a machined sealing surface of the cask upper ring forging.

1.2.1.2.3 Impact Limiters

The impact limiters are fabricated from aluminum. The aluminum "honeycomb" has a crush strength of 3,500 psi. The honeycomb is a multidirectional crushable material that does not actually resemble a hexagonal honeycomb structure. The impact limiter is attached to the cask body at four locations. The outside diameter of the top end impact limiter is 65.25 inches and the bottom end impact limiter has a 60.25-inch diameter. The top and bottom impact limiters are 27.8 and 28.3 inches long, respectively, and both overlap the ends of the cask body by 12.0 inches.

1.2.1.3 Valves and Testing

The closure lid and the alternate and Alternate B drain and vent port covers each have a seal test port. The seal test port accesses the volume between the two O-ring seals on the cover or lid permitting leakage testing to verify proper sealing. The vent and drain valves are not considered part of the containment boundary and are used during in-plant loading operations to access the cask cavity for water filling and draining, vacuum drying, helium backfilling, etc.

1.2.1.4 Heat Dissipation

There are no special devices utilized on the NAC-LWT cask for the transfer or dissipation of heat. The package is passively cooled, which is possible because of its relatively low maximum heat load of 2.5 kW. A more detailed discussion of the package thermal characteristics is provided in Chapter 3.

1.2.1.5 Coolants

There are no coolants utilized within the package other than the normal transportation atmosphere of air or inert gas, depending on content conditions.

1.2.1.6 Protrusions

There are no outer protrusions on the package other than the four external lifting trunnions, the longitudinal shear ring at the upper end of the cask, and the eight impact limiter attachment lugs, four near each end of the package. All of these protrusions are located within the envelope protected by the impact limiters. The closure lid and valve port covers are recessed into the cask body and do not protrude from the cask surface. Refer to the drawings in Section 1.4 for more detail.

1.2.1.7 Lifting and Tiedown Devices

Of the four trunnions located on the exterior of the package at the upper end forging, two are intended for lifting with a nonredundant lifting yoke and the other two are used with a redundant lifting yoke. The package lifting and tiedown features are described in more detail in Section 2.5.

1.2.1.8 Shielding

A 5.75-inch annulus of lead and 2.19 inches of steel are maintained between the cask contents and the exterior radial surface of the package for the attenuation of radiation. Five inches of borated water are also provided for neutron shielding. The bottom end of the cask provides 7.5 inches of steel and 3.0 inches of lead shielding, and the closure lid provides 11.3 inches of steel shielding. Further detail is provided in Chapter 5.

1.2.2 Operational Features

The NAC-LWT cask is intended to be simple to operate. The cask is designed to be easily loaded and handled at any nuclear facility. The outer surface of the cask is electropolished and the configuration of the exposed surfaces aids in decontamination. An optional sleeving arrangement is available to limit contact between the cask and the contaminated pool water during wet loading and unloading.

The closure lid of the cask and the two valve port covers (alternate and Alternate B designs) are one-piece fixtures designed for ease of handling and to maintain personnel dose rates as low as reasonably achievable (ALARA). The closure lid has built-in alignment grooves (i.e. key ways) to facilitate installation. The alternate and Alternate B port cover designs provide clearance for valves underneath the port cover. The inner O-rings on the closure lid and the vent and drain valve port covers are components of the cask containment boundary. For the transport of TPBAR contents and other contents requiring a leaktight transport containment configuration (i.e., damaged TRIGA fuel in sealed DFCs), the cask is required to be configured with Alternate

B drain and vent port covers incorporating metallic seals. The transport arrangement drawings for approved contents are presented in Section 1.4.

An alternative drain tube, including a drain tube alignment ring, is required to be installed and utilized when loading and transporting modular fuel baskets (i.e. not full length) and canisters. The impact limiters and the personnel barrier are designed to be removed and installed without the aid of supplemental lifting gear or fixtures. All approved content may be transported in an International Shipping Organization (ISO) container, except for PWR and BWR fuel assemblies. All operational features are readily apparent from the drawings provided in Section 1.4. Operational procedures are delineated in Chapter 7.

1.2.3 Contents of Packaging

The NAC-LWT cask is analyzed as presented in this SAR for the transport of the following contents:

- 1 PWR assembly;
- up to 2 BWR assemblies;
- up to 15 sound metallic fuel rods;
- up to 9 failed metallic fuel rods;
- up to 3 severely failed metallic fuel rods in filters;
- up to 42 MTR fuel elements;
- up to 42 DIDO fuel assemblies;
- up to 25 PWR fuel rods (including up to 14 rods classified as damaged);
- up to 25 BWR fuel rods (including up to 14 rods classified as damaged);
- up to 140 TRIGA fuel elements;
- up to 560 TRIGA fuel cluster rods;
- 2 GA IFM packages;
- up to 300 TPBARs (of which two can be prefailed);
- up to 55 TPBARs segmented during PIE, including segmentation debris;
- up to 700 PULSTAR fuel elements (intact or damaged);
- up to 42 spiral fuel assemblies;
- up to 42 MOATA plate bundles;
- any combination of individual ANSTO basket modules containing either spiral fuel assemblies or MOATA plate bundles up to a total of 42 assemblies/bundles; or
- up to 4,000 lbs of solid, irradiated and contaminated hardware, which may include fissile material less than a Type A quantity and meeting the exemptions of 10 CFR 71.15, paragraphs (a), (b) and (c). Total allowed mass includes the weight of spacers, shoring and dunnage.

Shipments in the NAC-LWT package shall not exceed the following limits:

1. The maximum contents weight shall not exceed 4,000 pounds.
2. The limits specified in Table 1.2-1 through Table 1.2-13 for the fuel and other radioactive contents shall not be exceeded.
3. Any number of casks may be shipped at one time, one cask per tractor/trailer vehicle.
4. The maximum decay heat shall not exceed the following: 2.5 kW for PWR fuel assemblies, 2.2 kW for BWR fuel assemblies, 2.3 kW for 25 high burnup PWR fuel rods, 2.1 kW for 25 high burnup BWR fuel rods, 1.26 kW for MTR fuel, 1.05 kW for DIDO fuel assemblies, 1.05 kW for TRIGA fuel elements or fuel cluster rods, 13.05 W for GA IFM packages, 0.693 kW for 300 TPBARs, 0.127 kW for TPBAR segments; 0.84 kW for the PULSTAR fuel contents, 0.756 kW for spiral fuel assemblies (0.126 kW per basket), 0.126 kW for MOATA plate bundles (21 W per basket), and 1.26 kW for solid, nonfissile, irradiated hardware.
5. Radiation levels shall meet the requirements delineated in 10 CFR 71.47 or 49 CFR 173.441. The neutron shield tank may be drained for shipment of metallic fuel rods.
6. Surface contamination levels shall meet the requirements of 10 CFR 71.87(i) or 49 CFR 173.443.
7. Damaged TRIGA fuel elements and fuel debris (up to two equivalent elements) will be shipped in a sealed damaged fuel canister in a leaktight configuration NAC-LWT.
8. Damaged TRIGA cluster rod and fuel debris will be transported in a sealed damaged fuel canister (maximum of up to six equivalent fuel cluster rods) in a leaktight configuration NAC-LWT.
9. MTR fuel elements may consist of any combination of intact or damaged highly enriched uranium (HEU), medium enriched uranium (MEU) or low enriched uranium (LEU) fuel elements that are enveloped by the parameters listed in Table 1.2-4, as supported by information presented in Table 5.1.1-2, Table 6.4.3-21, Table 6.4.3-22, Table 6.4.3-25 and Table 6.4.3-28.
10. High burnup PWR fuel rods will be shipped in either a sealed, free flow or screened can.
11. High burnup BWR fuel rods will be shipped in either a sealed, free flow or screened can.
12. Up to 25 high burnup PWR or BWR fuel rods in a fuel assembly lattice or rod holder. Up to 14 of the fuel rods in a rod holder may be classified as damaged. Damaged fuel rods or rod sections may be placed into fuel rod capsules prior to placing them in the fuel rod holder. Typical failed fuel rod capsule configuration is shown in Figure 1.2-11.
13. Production TPBARs will be shipped in an open top consolidation canister as shown in Figure 1.2.3-10 and assembled in the cask as shown in Figure 1.2.3-12.

14. Intact PULSTAR fuel elements may be loaded into a fuel rod insert or the PULSTAR screened or failed fuel can.
15. Damaged PULSTAR fuel elements and nonfuel components of PULSTAR fuel assemblies shall be loaded into either a PULSTAR failed fuel or screened fuel can, and placed into the top or base module of the 28 MTR fuel basket. Damaged fuel, including fuel debris, may be placed in an encapsulating rod prior to loading in a PULSTAR can.
16. Any combination of spiral fuel assemblies or MOATA plate bundles, each loaded into separate ANSTO basket modules containing up to a total of 42 assemblies/bundles.
17. Segmented TPBARs will be shipped in a sealed, dry Waste Container as shown in Figure 1.2.3-16 and assembled in the cask as shown in Figure 1.2.3-17.
18. Solid, irradiated and contaminated hardware containing less than a Type A quantity of fissile material and meeting the exemptions of 10 CFR 71.15, paragraphs (a), (b) and (c), loaded directly into the cask or contained in a secondary container or basket. The irradiated hardware spacer will be installed to limit the axial movement of the hardware above the lead shielded region of the cask body. As needed, additional secondary containers, dunnage and shoring may be used to limit the movement of the contents during normal and accident conditions of transport.

1.2.3.1 TRIGA Fuel and Basket Description

Two basic types of TRIGA fuel are to be transported in the NAC-LWT cask: TRIGA fuel elements and smaller fuel rods from TRIGA fuel cluster assemblies. TRIGA fuel elements are approximately 1-1/2 inches in diameter and are described in Section 1.2.3.1.1. TRIGA fuel cluster rods are smaller; approximately 1/2-inch in diameter and are also described in Section 1.2.3.1.1.

Up to 140 TRIGA fuel elements in the form of: a) standard fuel elements – either aluminum clad or stainless steel clad; b) instrumented fuel elements – similar to standard fuel elements (aluminum clad or stainless steel clad), but containing thermocouple instrumentation; and c) fuel follower control rod elements (aluminum or stainless steel clad) – poison rods with a fuel follower in a single tube may be shipped in the NAC-LWT cask. Up to 560 TRIGA fuel cluster rods may be shipped.

Up to six equivalent TRIGA fuel cluster rods may be loaded and transported in a sealed damaged fuel can (DFC). Up to the equivalent of two TRIGA damaged fuel elements and debris may be loaded and shipped in a sealed DFC. The TRIGA transport baskets and DFCs are described in Section 1.2.3.1.2.

1.2.3.1.1 TRIGA Fuel

TRIGA Fuel Elements

The characteristics of the design basis TRIGA fuel element are presented in Table 1.2-4 and in Table 1.2-1 for the poisoned basket and in Table 1.2-2 for the nonpoisoned basket.

The fuel material in a TRIGA fuel element is a solid, homogeneous mixture of uranium-zirconium hydride alloy, i.e., a metal alloy fuel. Both the aluminum-clad and the stainless steel-clad TRIGA fuel elements are approximately 1.5-inch diameter rods by approximately 30 inches long. The fuel follower control rod elements range in length from 45 inches to 66.5 inches and are cut, as required, to fit the basket length. Instrumented fuel elements are identical to standard fuel elements with the exception of thermocouples and wires and lead-out tubing. The lead-out tubing needs to be detached prior to shipment in order for the instrumented fuel elements to fit into the standard element height envelope. The aluminum-clad TRIGA fuel element and instrumented fuel element, the stainless steel-clad TRIGA fuel element and instrumented fuel element, and the standard fuel follower control rod element are shown in Figure 1.2.3-1 through Figure 1.2.3-5, respectively.

TRIGA Fuel Cluster Rods

The fuel material in TRIGA fuel cluster rods is a solid, homogeneous mixture of uranium-zirconium-erbium hydride alloy, i.e., a metal alloy fuel. Erbium is a burnable neutron poison that is used in the fuel to enhance the flux profile along the length of the fuel rod, and conservatively ignored in the nuclear evaluations. The rods have a nominal diameter of 0.54 inch and are approximately 31 inches long. The rod cladding is Incoloy 800 material and is 0.015-inch thick, minimum. Instrumented rods are identical to the standard rods, with the exception of thermocouples and wires. A diagram of the TRIGA fuel cluster rods, and the individual fuel pin (cluster rod) making up the cluster, is shown in Figure 1.2.3-6.

The active fuel region of a TRIGA fuel cluster rod is a maximum of 0.53 inch in diameter, 22.5 inches in length, and has an initial uranium enrichment of up to 95 percent for HEU material and 20 percent for LEU material. A compression spring is utilized to fill the space in the plenum region of the rod, and top and bottom plugs are used to seal the fuel within the rod. The design-basis TRIGA fuel cluster rod characteristics are summarized in Table 1.2-3, Table 1.2-4, and Tables 5.1.1-1, 5.1.1-2, 6.2.6-1 and 6.2.6-2.

Axial fuel spacers, as shown on Drawing 315-40-085, may be used to axially position the TRIGA fuel elements, fuel inserts and DFCs. The axial spacers do not provide a safety function and are dunnage used to position the fuel elements to facilitate fuel handling. The total weight per basket

module cell for the TRIGA fuel elements or cluster rods, inserts, spacer(s) and fuel cans, as applicable, shall be limited to a maximum of 80 pounds.

TRIGA Fuel Classification

The TRIGA fuel contents are divided into three categories based on fuel condition for evaluation, loading configuration and transport in the NAC-LWT:

1. Intact fuel (i.e., no cladding breach) is loaded directly into the TRIGA fuel basket modules (Section 1.2.3.1.2) with a maximum of four TRIGA fuel elements per loading position. Up to 16 intact cluster rods are loaded into fuel rod inserts (Drawing 315-40-096) that are inserted into the TRIGA fuel basket module cell openings. Intact TRIGA fuel elements and cluster rods may be loaded into a sealed or screened damaged fuel can, if length permits.

2. Damaged TRIGA fuel elements and TRIGA fuel debris (up to the equivalent of two fuel elements) shall be loaded into a sealed DFC (Section 1.2.3.1.2), and then loaded into a top or base basket module and transported in a leaktight configuration NAC-LWT.

3. Damaged TRIGA cluster rods and cluster rod fuel debris (up to the equivalent of six cluster rods) shall be loaded into a sealed DFC and then loaded into a top or base basket module and transported in a leaktight configuration NAC-LWT.

1.2.3.1.2 TRIGA Fuel Baskets and Damaged Fuel Cans

The TRIGA fuel basket assembly configurations consist of five modules – a base module, three intermediate modules, and a top module. The three intermediate modules are interchangeable, but the base and top modules are required to be in their proper positions. Two basket configurations are available, "nonpoisoned" and "poisoned," where the poisoned basket configuration utilizes borated steel plates for additional criticality control. Each module has up to seven cells (fuel positions) for loading TRIGA fuel elements or cluster rods. The center cell of each module of the nonpoisoned basket configuration is blocked by a welded stainless steel baffle that prevents loading of that cell. The nonpoisoned configuration is also referred to as the 24-element basket or the 120-element loading, based on the maximum of 120 intact TRIGA fuel elements that may be loaded into the baskets in this configuration. The poisoned configuration is also referred to as the 28-element basket or the 140-element loading, based on the maximum of 140 intact TRIGA fuel elements that may be loaded into the baskets in this configuration. Additionally, the nonpoisoned configuration can accommodate up to 480 intact TRIGA fuel cluster rods, while the poisoned basket can hold up to 560 intact TRIGA fuel cluster rods.

Each basket module is a Type 304 stainless steel weldment consisting of longitudinal divider plates with circular support plates near each end; the top module also has a support plate at its midpoint due to its longer length. The poisoned basket modules contain four borated stainless steel plates that are seal welded to surfaces of the divider plates in the central region of the basket cross-section. The nonpoisoned basket modules are shown in Drawings 315-40-070, -071, and -072 and the poisoned basket modules are shown in Drawings 315-40-080, -081, and -082.

The nonpoisoned TRIGA fuel basket assembly in the NAC-LWT cask is shown in Drawing 315-40-079. The poisoned basket assembly in the NAC-LWT cask is shown in Drawing 315-40-084. In the poisoned basket configuration, an alternate assembly is presented that utilizes one base module and four intermediate modules, along with a spacer (Drawing 315-40-083). The spacer is utilized to fill the space differential in the cask cavity resulting from the use of an additional intermediate module, rather than a top module. This additional assembly configuration is provided for flexibility in situations where the extra length provided by the top module is not needed. The fuel basket modules are described in further detail in Section 2.6.12.8. Damaged TRIGA fuel and fuel debris shall be loaded into sealed DFCs and transported in a leaktight configuration NAC-LWT.

The sealed DFC is a 3.25-inch outside diameter tube with a 0.065-inch thick wall. The bottom of the sealed fuel can includes a check valve and drain plug to facilitate draining of the can. The top of the sealed DFC is closed by a bolted lid that is sealed with a metallic O-ring and includes a diaphragm valve to facilitate draining, drying, and helium backfilling of the can. The sealed DFC is constructed of austenitic stainless steels as shown on Drawings 315-40-086, -087, -088.

1.2.3.2 MTR and DIDO Fuel and Basket Description

The MTR fuel elements to be shipped are 33 to 57 inches long, including the upper and lower nonfuel-bearing hardware, which may be removed from the element prior to transport. The MTR element fuel plates consist of a U-Al, U_3O_8-Al, or U_3Si_2-Al fuel meat clad with aluminum. The fuel plates are held in a parallel arrangement with two thick aluminum slotted pieces to form a fuel element. The active fuel region is typically 22.75 inches in height, and the fuel meat is typically 0.023-inch thick. MTR elements/plates may contain cadmium wires. A maximum 100-gram cadmium source is addressed in the shielding evaluations documented in Chapter 5. Axial fuel spacers and plates may be used in the cells of the basket modules to position MTR elements to facilitate fuel unloading and handling. The axial fuel spacers do not perform a safety function and are considered dunnage. The axial fuel spacers and plates are shown on Drawing 315-40-085.

A maximum of 42 MTR fuel elements has been analyzed for transport in the NAC-LWT cask. This configuration consists of up to seven fuel elements placed radially in each of the six axial fuel basket modules. Two alternate configurations of MTR fuel element loading provide for loads of 35 elements in five basket modules or 28 elements in four basket modules. HEU MTR fuel elements having > 380 g ^{235}U, but less than 460 g ^{235}U, shall have a minimum of 2.0 cm (0.8 inch) of nonfuel hardware and/or spacers/plates at both ends of the fuel element. The minimum 2.0 cm nonfuel hardware and/or spacer/plate dimension assures criticality control. The axial fuel spacer and plate design is shown on Drawing 315-40-085. For the shipment of MTR fuel elements (or an equivalent number of plates in a plate canister) having ^{235}U greater than 470 g per element, or greater than 22 g per plate (up to a maximum of 640 g per element or 32 g per plate), the maximum quantity of elements per basket module is limited to four, which are to be loaded in basket positions 4, 5, 6 and 7. Cell block spacers shall be installed in basket openings 1, 2 and 3 to block these cells from being inadvertently loaded with fuel elements. The cell block spacer design is shown on Drawing 315-40-085. Therefore, for the transport of elements of greater than 470 g ^{235}U, if only one element exceeds the 470 g (22 g per plate) limit, a maximum of four elements shall be loaded into the seven-element basket module and cell block spacers shall be placed in basket opening positions 1, 2 and 3.

Loose MTR fuel plates may be shipped in an MTR plate canister to facilitate handling. The contents of the canister are limited to the number of plates in the original intact fuel assembly, and the fuel plate dimensions and fuel masses must be bounded by the MTR fuel element limits in Table 1.2-4. The total weight per basket module cell for the fuel element, spacer(s) and fuel plate canister, as applicable, shall be limited to a maximum of 80 pounds.

A maximum of 42 DIDO fuel assemblies has been analyzed for transport in the NAC-LWT cask. Again, up to seven fuel assemblies may be placed radially in each of six axial fuel basket modules.

DIDO fuel assemblies are similar to MTR fuel elements in that the fuel bearing hardware consists of plates of fuel meat sandwiched by cladding. However, in DIDO fuel, the plates have been formed into tubular elements that are arranged in a concentric configuration. Typical DIDO assemblies contain four of the concentric tubes.

MTR and DIDO fuel characteristics are presented in Table 1.2-4.

1.2.3.3 General Atomics Irradiated Fuel Material (GA IFM) and Basket Description

The GA IFM is made up of two separate types of fuel material—the High-Temperature Gas-Cooled Reactor (HTGR) type fuel and the Reduced-Enrichment Research and Test Reactor (RERTR) type fuel. Each type of IFM is packaged in its own unique Fuel Handling Unit (FHU). Figures 1.2-7 and 1.2-8 illustrate the HTGR and RERTR FHUs. Detailed drawings for the GA and IFM FHUs are in Section 1.4.

The HTGR IFM is comprised of fuel in four forms: fuel particles (kernels), fuel particles (coatings), fuel compacts (rods), and fuel pebbles. Fuel kernels are solid, spheridized, high-temperature sintered fully-densified, ceramic kernel substrate, composed of: UC_2, UCO, UO_2, $(Th,U)C_2$, or $(Th,U)O_2$. The as-manufactured enrichment of the HTGR fuel varies from ~10.0 to 93.15 wt % ^{235}U. Fuel coatings are solid, spheridized, isotropic, discrete multi-layered fuel particle coatings with chemical composition including pyrolitic-carbon (PyC) and silicon carbide (SiC). Fuel compacts are multi-coated ceramic fuel particles, bound in solid, cylindrical, injection-molded, high-temperature heat-treated compacts. The fuel compact matrix is composed of carbonized graphite shim, coke, and graphite powder. Fuel pebbles are multi-coated fuel particles, bound in solid, spherical injection-molded, high-temperature heat-treated pebbles. The fully-cured binding matrix is composed of carbonized graphite shim, coke , and graphite powder.

The RERTR IFM is comprised of 20 irradiated TRIGA fuel elements; 13 of the elements are intact and the remaining seven have been previously sectioned for examination purposes. Parameters characterizing the RERTR/TRIGA fuel elements are shown in Table 6.2.9-1. Three distinct mass loadings of uranium were used in the 20 TRIGA elements: 20, 30, and 45 wt % U; the average mass of the fueled portion of these elements is 551g with an enrichment of 19.7 wt % ^{235}U. The RERTR IFM consists of U-ZrH metal alloy fuel material and as a solid meets the requirement of 10 CFR 71.63.

Two GA IFM Fuel Handling Units (FHU) are intended for a single shipment in the NAC-LWT. The first IFM FHU contains HTGR type fuel and the second contains RERTR type fuel. Each IFM FHU consists of stainless steel weld-encapsulated primary and secondary enclosures. The FHUs are filled and sealed with air at atmospheric pressure. The two IFM FHUs are placed in the top of the NAC-LWT cavity with a bottom spacer to facilitate unloading of the IFM packages.

The GA IFM fuel characteristics are presented in Table 1.2-7.

1.2.3.4 PWR Fuel

The NAC-LWT cask is analyzed for the PWR fuel assemblies listed in Table 1.2-5. This table provides the dimensional and enrichment constraints for the PWR fuel. The burnup and decay heat limits are specified in Table 1.2-4.

1.2.3.5 BWR Fuel

The NAC-LWT cask is analyzed for the BWR fuel assemblies listed in Table 1.2-6. This table provides the dimensional constraints for the BWR fuel. The enrichment, burnup and decay heat limits are specified in Table 1.2-4.

1.2.3.6 TPBARs

The NAC-LWT cask is analyzed for the transport of two separate Tritium Producing Burnable Absorber Rod (TPBAR) content configurations. For the transport of production TPBARs from the reactor facility to the DOE processing facility, an open (i.e., unsealed) stainless steel consolidation canister is utilized to contain up to 300 TPBARs, two of which can be prefailed. The characteristics of the production TPBARs are listed in Table 1.2-8. The consolidation canister assembly is shown in Figure 1.2.3-10.

The second transport configuration is for the shipment of segmented TPBARs, following post-irradiation examination (PIE), contained in a welded stainless steel waste container containing segments and debris from up to 55 TPBARs. The characteristics of the TPBAR PIE segments are provided in Table 1.2-12. The waste container and extension weldment assembly is shown in Figure 1.2.3-16.

TPBARs are similar in size and nuclear characteristics to standard, commercial PWR, stainless steel-clad burnable absorber rods. The exterior of a typical TPBAR is a stainless steel clad tube. The internal components of the TPBAR are designed and selected to produce and retain tritium. Internal configurations differ for various TPBAR designs (see DOE reports provided in the Chapter 1 Appendices). The internal components of a typical TPBAR include a plenum spacer tube (getter tube), a spring clip or a plenum (compression) spring, pellet stack assemblies (pencils), and a bottom spacer tube. A pencil consists of a zirconium alloy liner around which lithium aluminate absorber pellets are stacked and then confined in a getter tube as shown in Figure 1.2.3-9. The unclassified design details of the various TPBAR designs are provided in the unclassified DOE documents and drawings provided in the Chapter 1 Appendices.

The transport assembly arrangements for both TPBAR content configurations are identical and include a closure lid spacer assembly, a TPBAR basket and Alternate B port covers with bolting

installed. The detailed requirements for the NAC-LWT assembly are provided in license drawing 315-40-128 in Section 1.4. The overall payload arrangement for the NAC-LWT with the consolidation canister and waste container are shown in Figure 1.2.3-12 and Figure 1.2.3-17, respectively. For the transport of fewer than 300 TPBARs in the consolidation canister, stainless steel dunnage may be used to align and protect the contents. The weight and volume of the dunnage and the reduced TPBAR contents of the consolidation canister must be less than, or equal to, the weight and volume of 300 TPBARs.

The TPBAR content conditions are analyzed and evaluated for compliance with structural, thermal, containment and shielding conditions of the NAC-LWT in the appropriate SAR chapters. TPBARs do not contain fissile material and, therefore, criticality evaluations have not been performed. The operating procedures for the wet and dry loading and dry unloading of the TPBAR contents are provided in Chapter 7. The special leakage and pressure testing requirements for NAC-LWT casks intended for the transport of TPBAR contents are provided in Chapter 8.

1.2.3.7 Cladding for PWR/BWR Fuel

The PWR and BWR fuel rod cladding is of Zirconium alloy type (Zircaloy-2, Zircaloy-4, Zirlo, M-5, etc.). Minor variations of alloy composition have no impact on performance of cladding material.

1.2.3.8 PULSTAR Fuel Element and Transport Configuration Description

PULSTAR fuel elements are transported in the NAC-LWT in the 28 MTR fuel basket assembly, which contains four modules with seven cells per module. The basket assembly is composed of a top module, a base module, and two intermediate modules (Dwgs 315-40-051, -049, and -050, respectively).

PULSTAR fuel elements may be loaded into the module cells in one of four configurations: a) intact PULSTAR fuel assemblies b) intact PULSTAR fuel elements loaded into the 4×4 TRIGA fuel rod insert (Dwg. 315-40-096); c) intact or damaged PULSTAR fuel elements, fuel debris and nonfuel-bearing components of PULSTAR fuel assemblies in the PULSTAR screened can (Dwg. 315-40-135); or d) intact or damaged PULSTAR fuel elements, fuel debris and nonfuel-bearing components of PULSTAR fuel assemblies in the PULSTAR sealed can (Dwg. 315-40-130). The contents of either can type are restricted to a quantity of fissile material and a total volume of material equivalent to 25 PULSTAR fuel elements. The sealed cask contents are restricted to the displaced volume of 25 intact PULSTAR fuel elements. The total cask payload shall not exceed 700 PULSTAR fuel elements. Loading of modules with mixed PULSTAR

payload configurations is allowed, but PULSTAR cans, either screened or sealed, are restricted to loading in the base and top modules.

PULSTAR fuel elements are low enriched (< 7 wt %) uranium oxide rods, with zirconium alloy cladding. During reactor operation, 25 PULSTAR fuel elements are arranged in a rectangular 5×5 lattice, surrounded by a zirconium alloy box, and capped by top- and bottom-end fittings to form a PULSTAR fuel assembly. The nonfuel components of a PULSTAR fuel assembly are primarily aluminum and zirconium alloy and do not contain a significant activation source. A sketch of a PULSTAR fuel assembly is provided in Figure 1.2.3-13. Key physical, radiation protection and thermal characteristics of the PULSTAR fuel assembly/elements are listed in Table 1.2-9.

The sealed and screened PULSTAR cans are stainless steel containers that: a) minimize the dispersal of gross fuel particles that may escape from damaged fuel element cladding and/or fuel debris; b) facilitate retrieval of the contents from the transportation cask; and c) confine damaged fuel and/or debris within a known volume to facilitate criticality control, maintain dose limits, and control thermal loads within the cask. PULSTAR fuel pellets, pieces, and debris may be placed in an encapsulating rod for handling purposes prior to placement into either a sealed or screened can. The encapsulating rod is not required and has no safety significance. In addition to fuel elements, the cans may contain fuel assembly hardware up to the total content weight limit specified in Table 1.2-9. For operational/retrievability purposes, stainless steel rod inserts may be used to position the PULSTAR fuel elements within the fuel rod insert. Total content weight shall not exceed the total weight limit specified in Table 1.2-9. The fuel rod insert is composed of a 4×4 grid of 0.75-inch OD × 0.065-inch wall stainless steel tubes. The tubes provide structural support for individual intact PULSTAR fuel elements during transport in the NAC-LWT.

Spacers may be used to axially position PULSTAR fuel contents near the top of the module for ease of loading and unloading operations. The spacers are provided for ease of operations and do not provide a safety function.

1.2.3.9 ANSTO Basket and Payload Description

Two basic fuel types are to be transported in the ANSTO baskets within the NAC-LWT cask: spiral fuel assemblies and MOATA plate bundles. Spiral fuel assemblies are composed of cylindrical aluminum inner and outer shells connected by curved metallic fuel plates. Further detail on the spiral fuel assemblies is provided in Section 1.2.3.9.1. MOATA plate bundles are comprised of up to 14 MTR fuel plates. Further detail on the plate bundles is provided in Section 1.2.3.9.2. Spiral fuel assemblies and MOATA plate bundles shall be intact. Note that spiral

assemblies may be cropped by removing nonfuel-bearing hardware to fit within the basket tubes. Cropped spiral fuel assemblies are classified as intact fuel.

Up to 42 spiral fuel assemblies or 42 MOATA plate bundles may be loaded. A full cask load contains 6 baskets of up to 7 fuel assemblies or plate bundles per basket. The mixed loading of ANSTO basket modules containing either spiral fuel assemblies or MOATA plate bundles is authorized.

1.2.3.9.1 Spiral Fuel Assemblies

The design basis characteristics of spiral fuel assemblies are presented in Table 1.2-10. The fuel material in spiral fuel assembly plates is a solid, homogeneous mixture of uranium-aluminum alloy, i.e., a metal alloy fuel. The fuel meat of each plate is clad in aluminum. A set of 10 curved fuel plates is located between an inner and outer cylindrical aluminum shell. Fuel elements are cropped to fit axially within the basket envelope. Fuel material is not cut during the cropping operation. The fuel plates are located in a spiral pattern, maintaining a constant pitch between fuel plate centers. A sketch of the assembly cross-section is provided in Figure 1.2.3-14.

1.2.3.9.2 MOATA Plate Bundles

The design basis characteristics of MOATA plate bundles are presented in Table 1.2-4. The fuel material in the plate bundle is a solid, homogeneous mixture of uranium-aluminum alloy, i.e., a metal alloy fuel. Each plate is clad in aluminum. A plate bundle is comprised of up to 14 fuel plates. Two thick (0.635 cm) aluminum nonfuel side plates support the fuel plate stack from two sides, making a possible total of 16 plates per bundle. At each axial end, the plates in the stack are connected by a pin. Spacing between plates is maintained by disk spacers placed onto the top and bottom pins between each fuel plate and the aluminum side plates. A sketch of a typical MOATA plate bundle is provided in Figure 1.2.3-15.

1.2.3.10 Solid, Irradiated and Contaminated Hardware

The design basis characteristics of the solid, irradiated and contaminated hardware are provided in Table 1.2-13. As described in the content definition, the solid, irradiated and contaminated hardware may contain small quantities of fissile materials. Fissile materials in the irradiated hardware contents are acceptable if the quantity of fissile material does not exceed a Type A quantity and does not exceed the exemptions of 10 CFR 71.15, paragraphs (a), (b) and (c).

The irradiated hardware may be directly loaded into the NAC-LWT cask cavity, or may be contained in a secondary container or basket. As needed, appropriate component spacers, dunnage and shoring may be used to limit the movement of the contents during normal and accident conditions of transport.

To ensure that the movement of the irradiated hardware contents above the lead shielded length of the NAC-LWT cask body (i.e., the approximately upper 6.25 inches of the cavity length) is precluded, an Irradiated Hardware Lid Spacer as shown on Drawing No. 315-40-145 shall be installed for all irradiated hardware content configurations. The total installed height of the spacer is 6.5 inches. Therefore, the available cavity length for the irradiated hardware is approximately 171 inches. The NAC-LWT cask shall be assembled for transport as shown on NAC Drawing No. 315-40-01 with the irradiated hardware spacer installed on the lid.

A comparative shielding evaluation for a conservatively selected irradiated hardware transport configuration (i.e., a single line source with no self-shielding) or consideration of the additional shielding provided by additional spacers, dunnage, inserts or secondary containers is presented in Chapter 5. The evaluations show that the regulatory dose rate requirements per 10 CFR 71.47 for normal conditions of transport, or 10 CFR 71.51(b) under hypothetical accident conditions, are not exceeded.

Figure 1.2.3-1 Aluminum Clad TRIGA Fuel Element

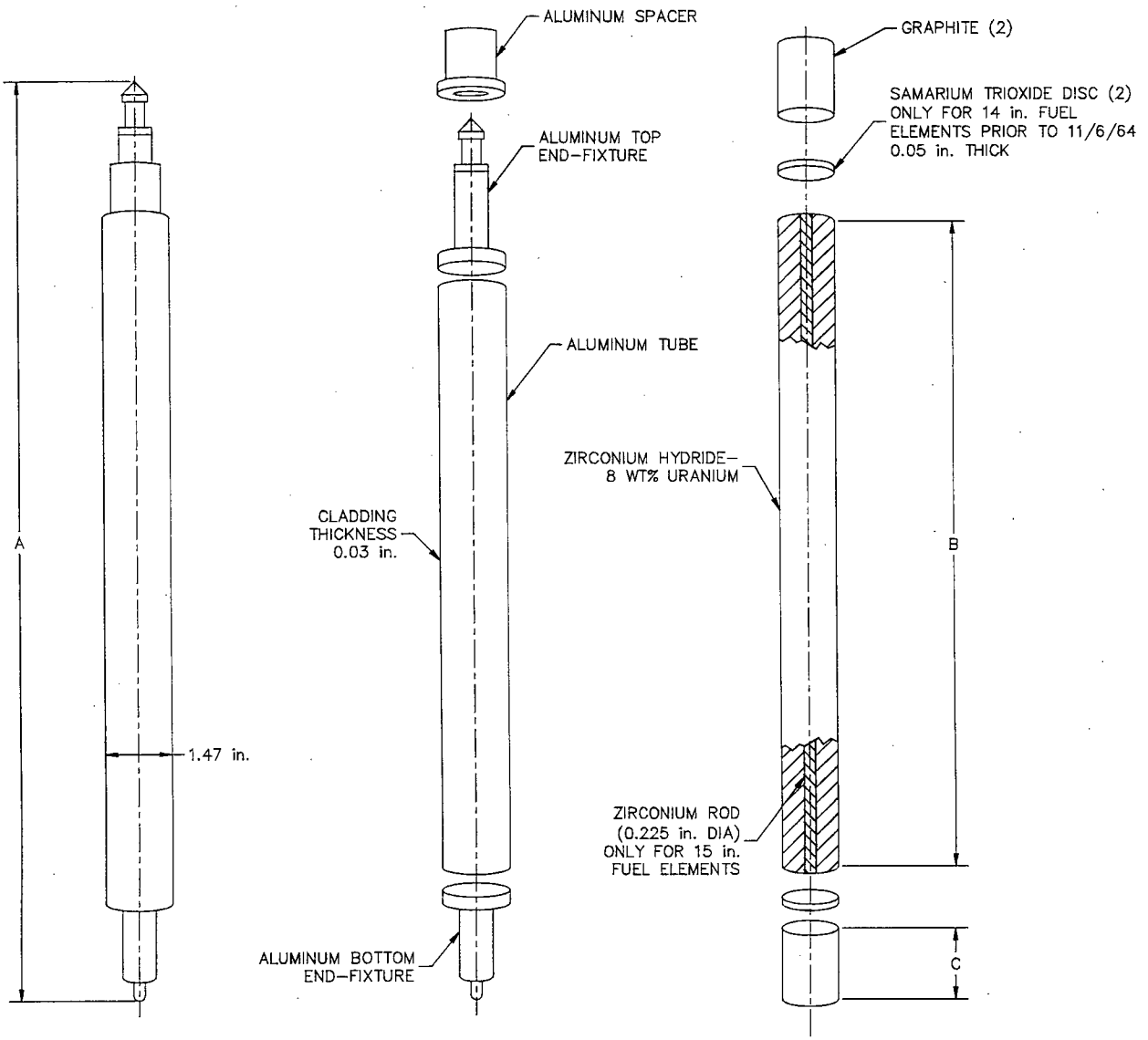

Figure 1.2.3-2 Aluminum Clad Instrumented Fuel Element

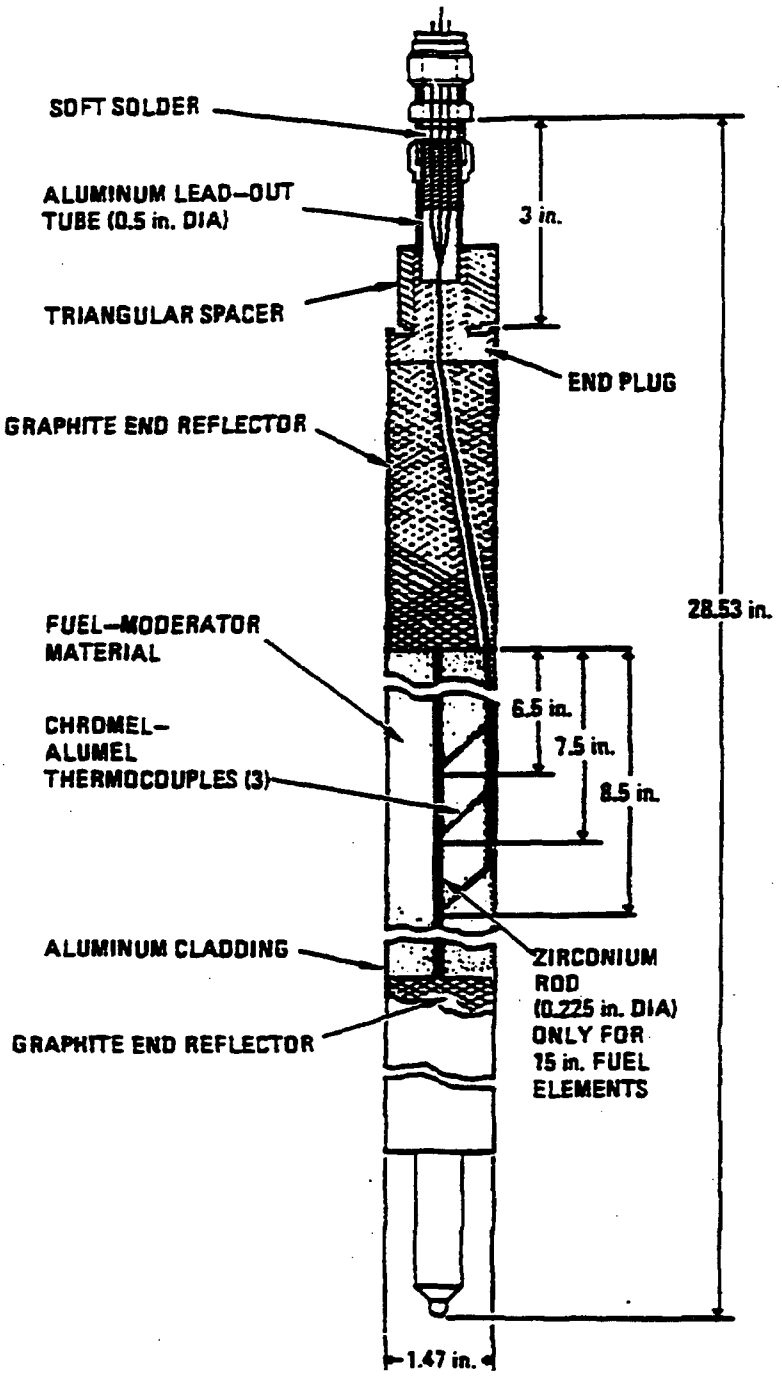

Figure 1.2.3-3 Stainless Steel Clad TRIGA Fuel Element

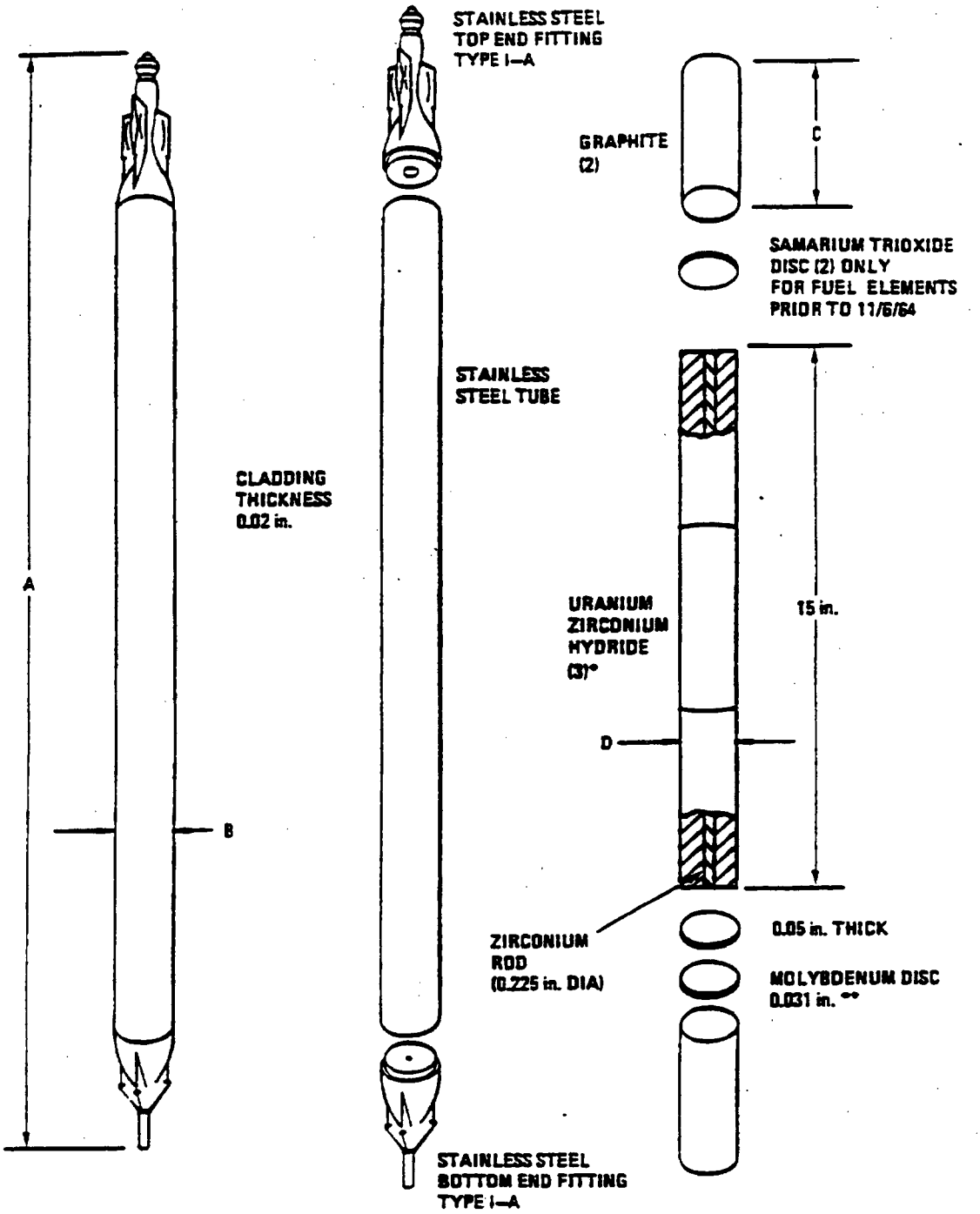

Figure 1.2.3-4 Stainless Steel Clad Instrumented Fuel Element

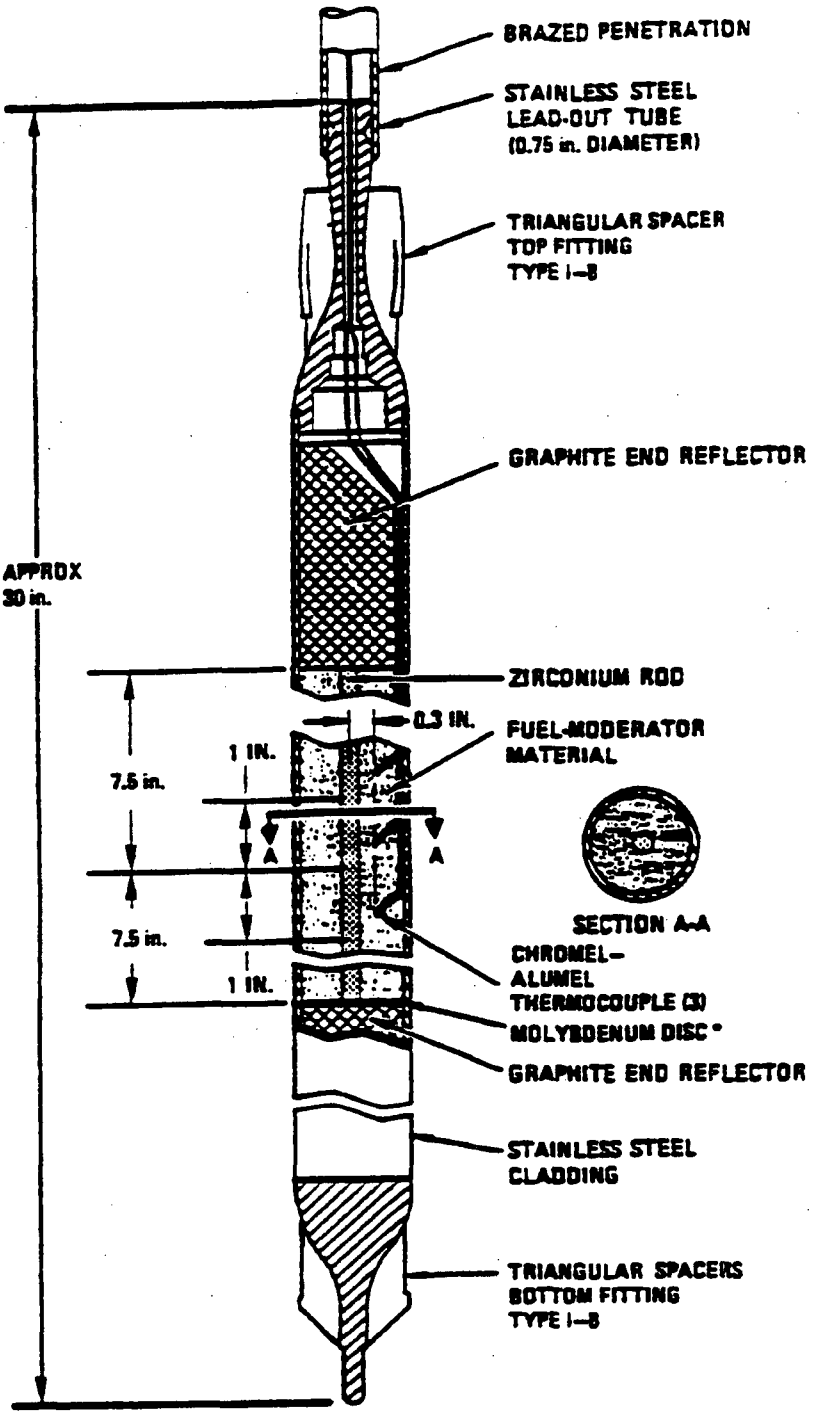

Figure 1.2.3-5 Standard Fuel Follower Control Rod Element

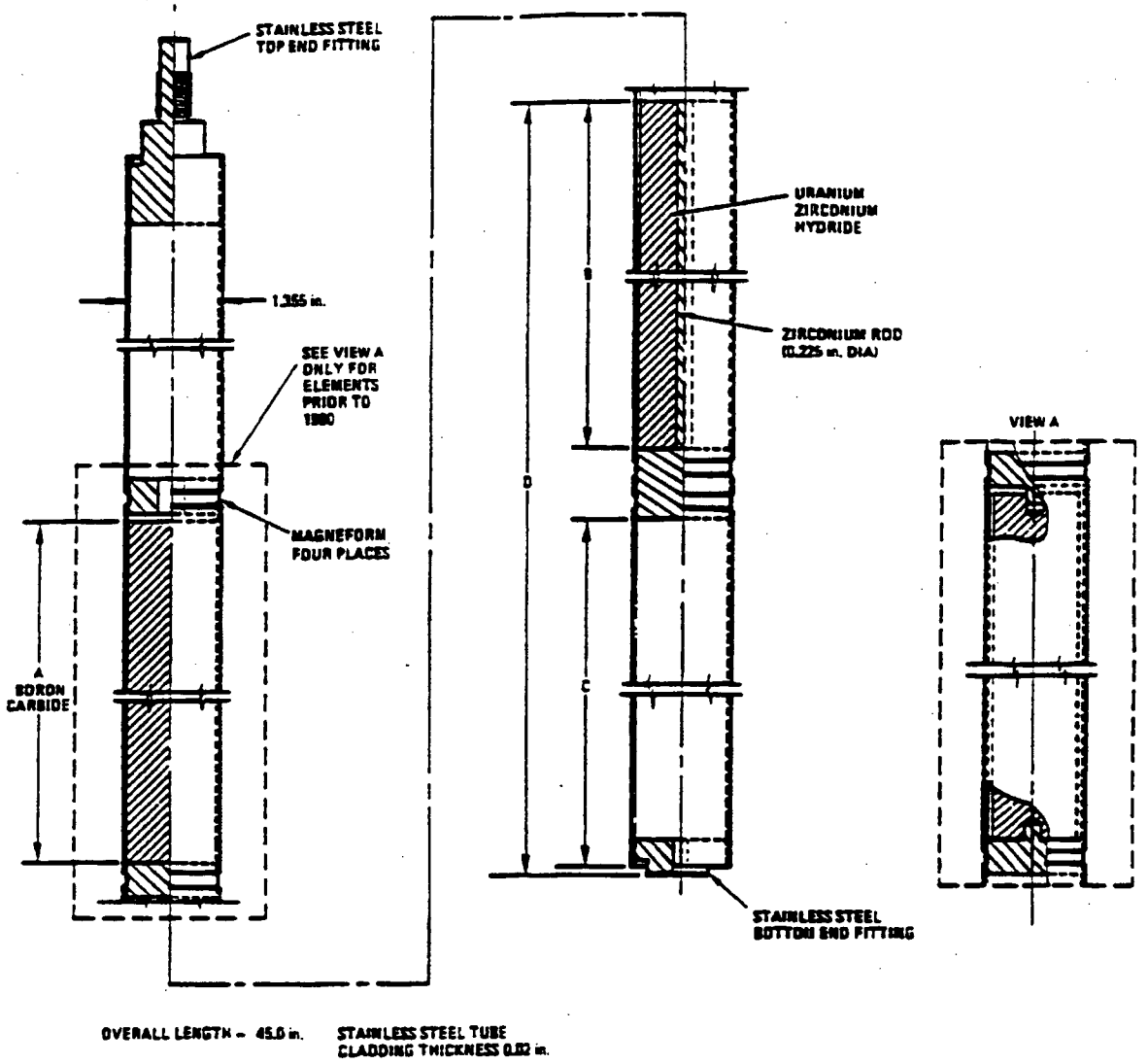

Figure 1.2.3-6 TRIGA Fuel Cluster and Rod Details

TRIGA *FUEL CLUSTER*

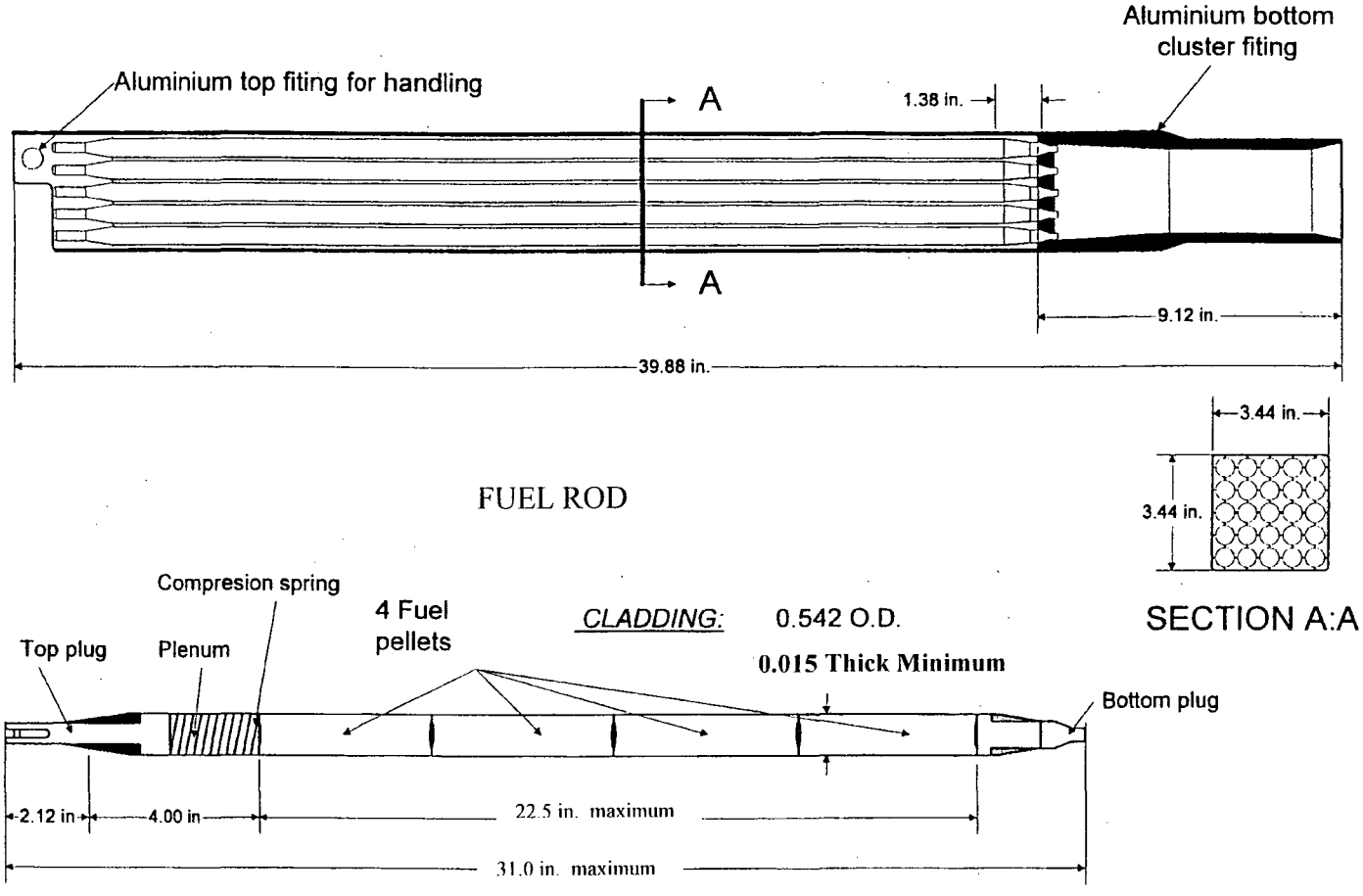

Fuel bundle and fuel element

Figure 1.2.3-7 HTGR Fuel Handling Unit

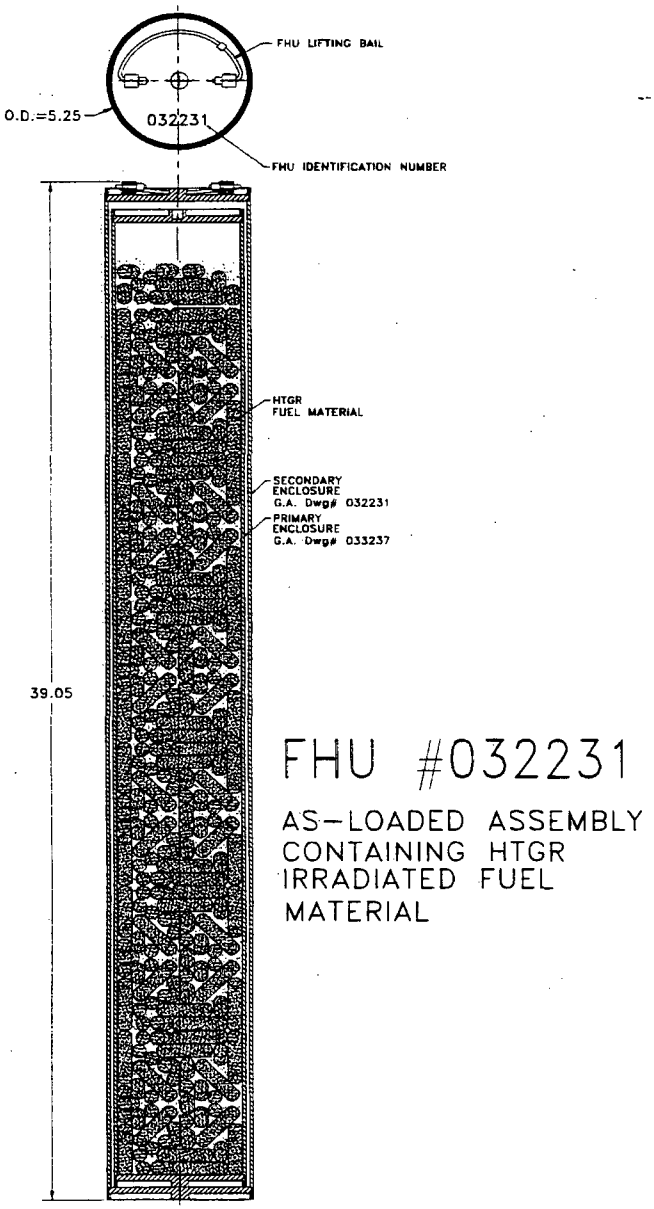

Figure 1.2.3-8 RERTR Fuel Handling Unit

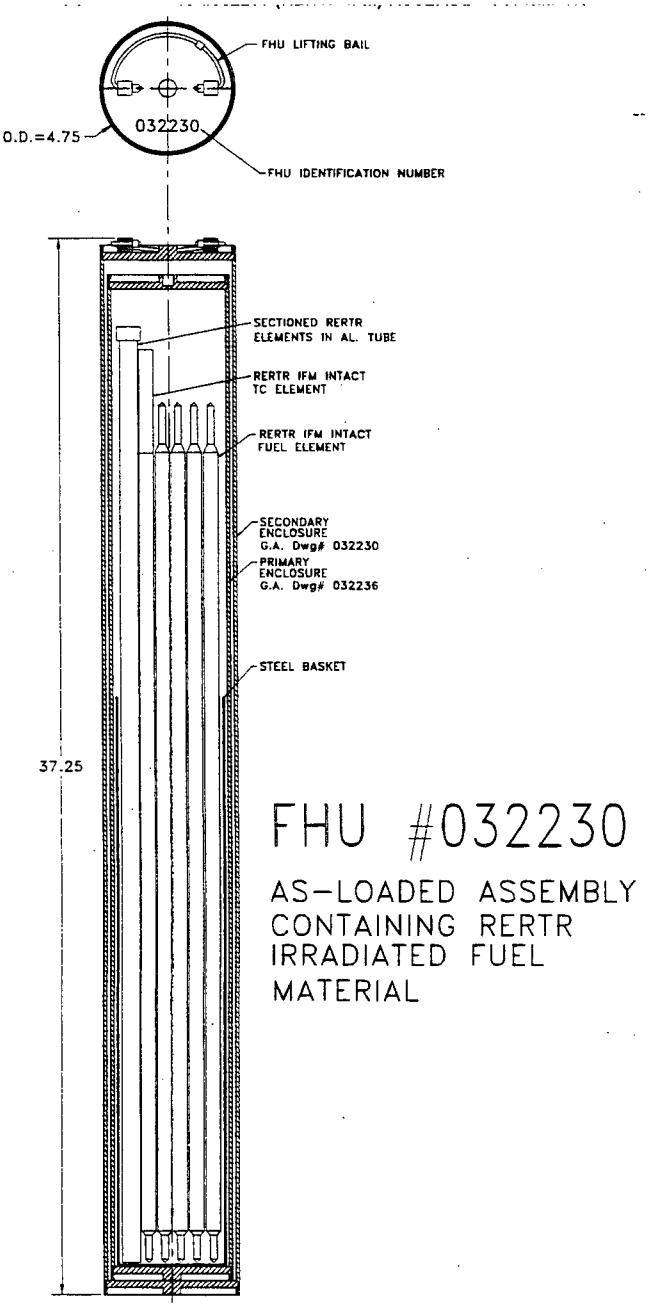

Figure 1.2.3-9 Typical TPBAR Assembly

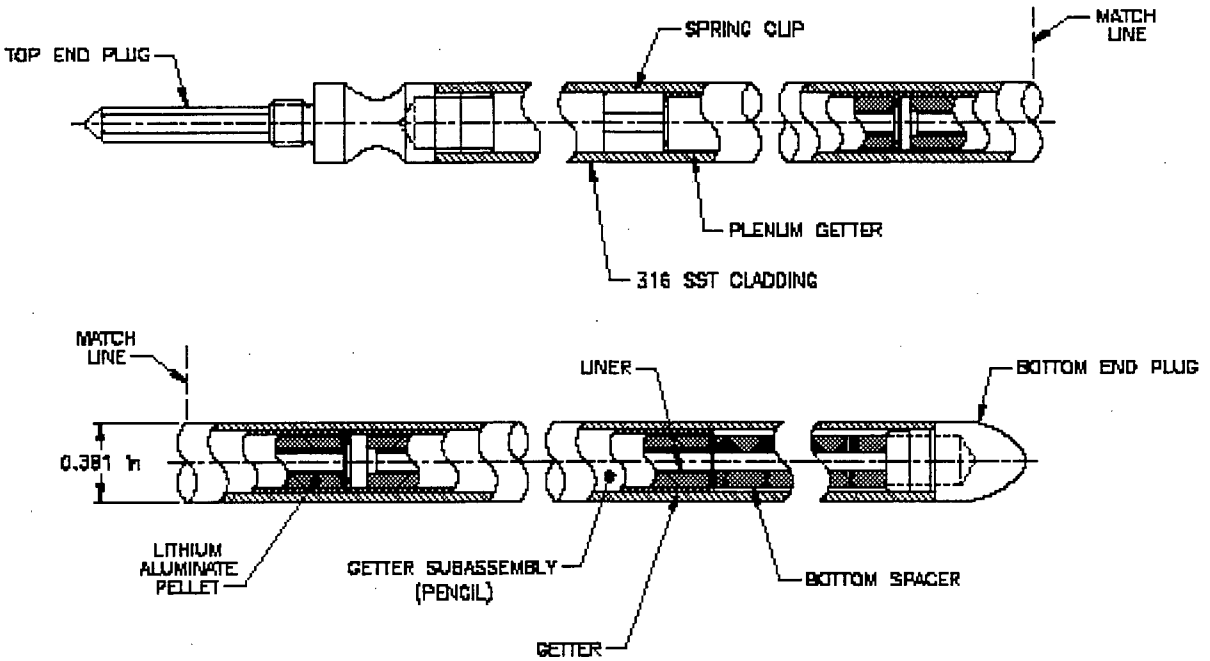

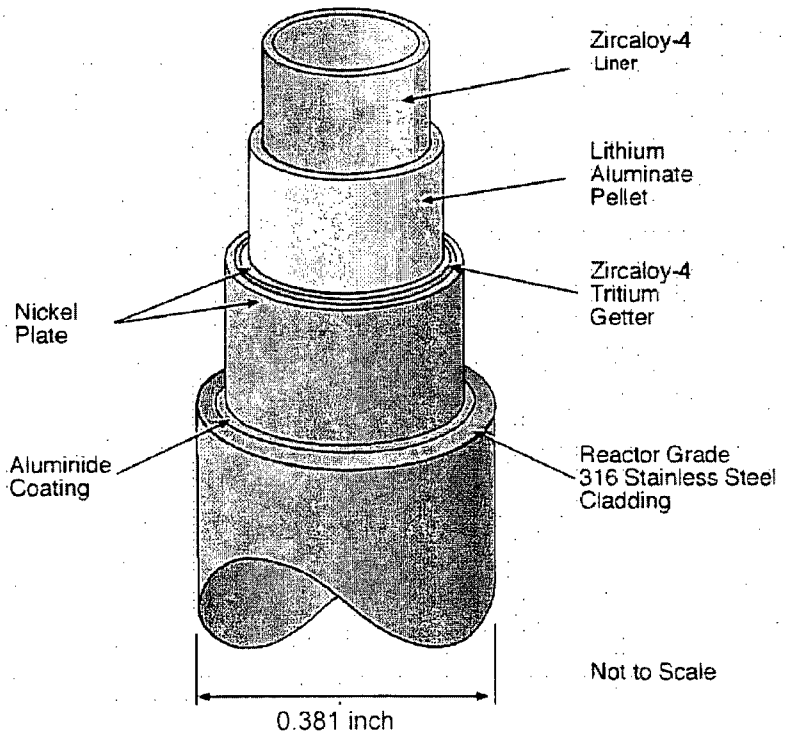

Figure 1.2.3-10 TPBAR Consolidation Canister Sketch

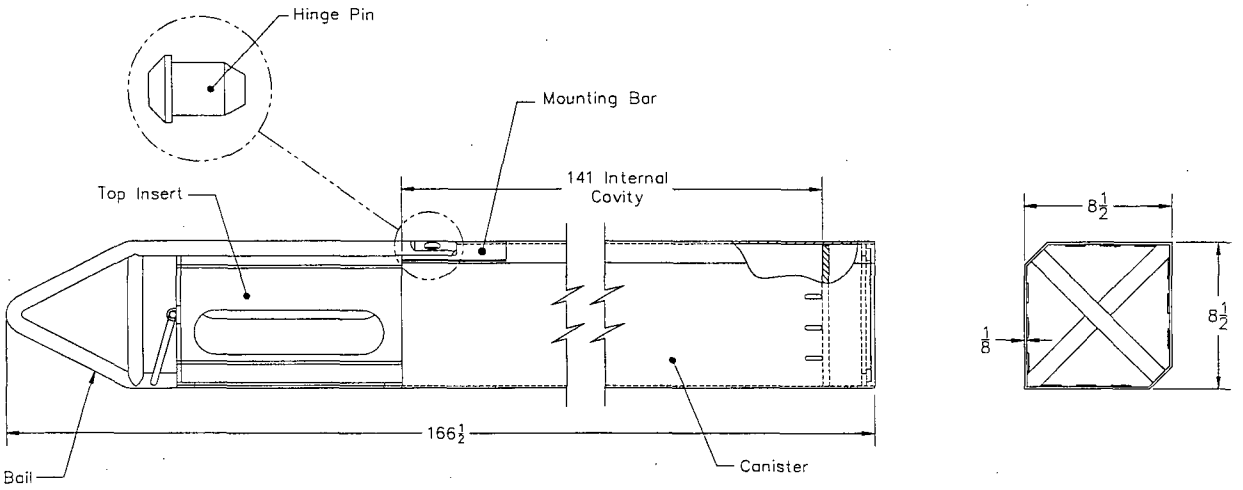

Conceptual Layout with Approximate Dimensions

Note: Material of construction is stainless steel.

Figure 1.2.3-11 Failed PWR/BWR Fuel Rod Capsule

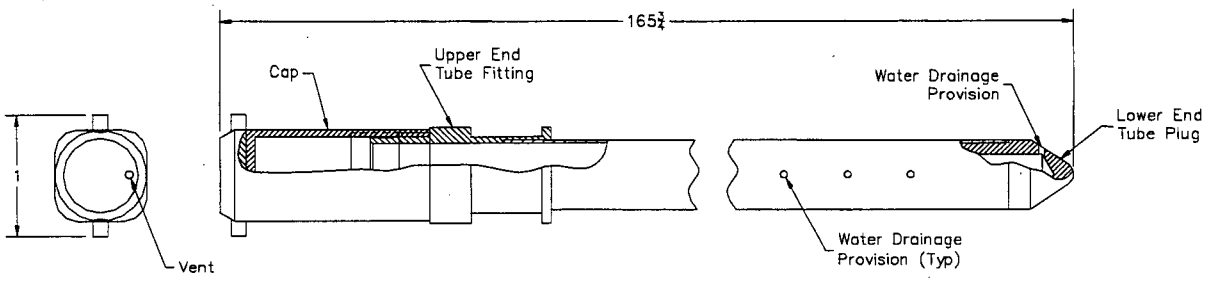

Failed Fuel Rod Capsule Conceptual Layout

All Dimensions Approximate

Note: Material of construction is stainless steel.

Figure 1.2.3-12 NAC-LWT with TPBAR Consolidation Canister Payload

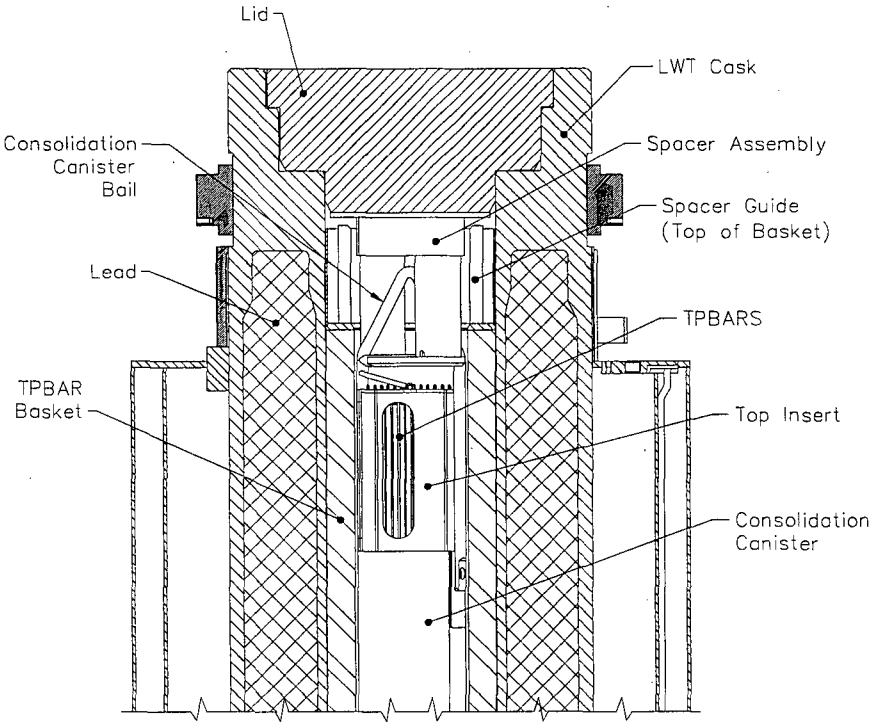

Figure 1.2.3-13 PULSTAR Fuel Assembly

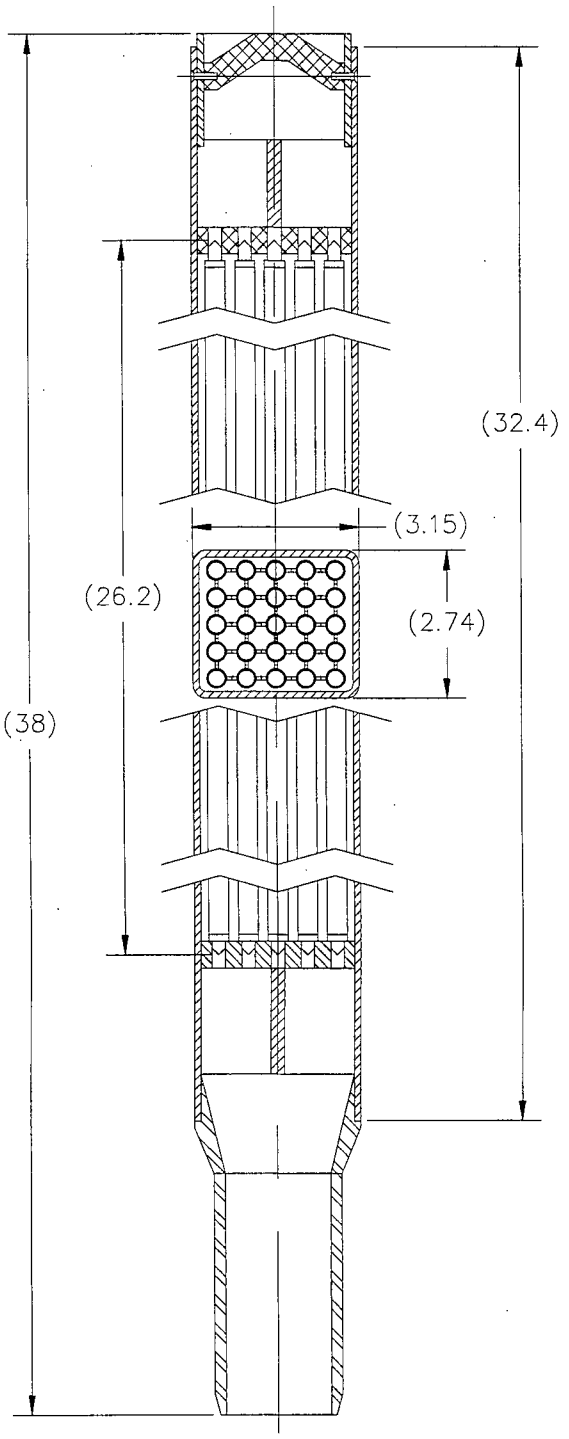

Figure 1.2.3-14 Spiral Fuel Assembly Cross-Section Sketch

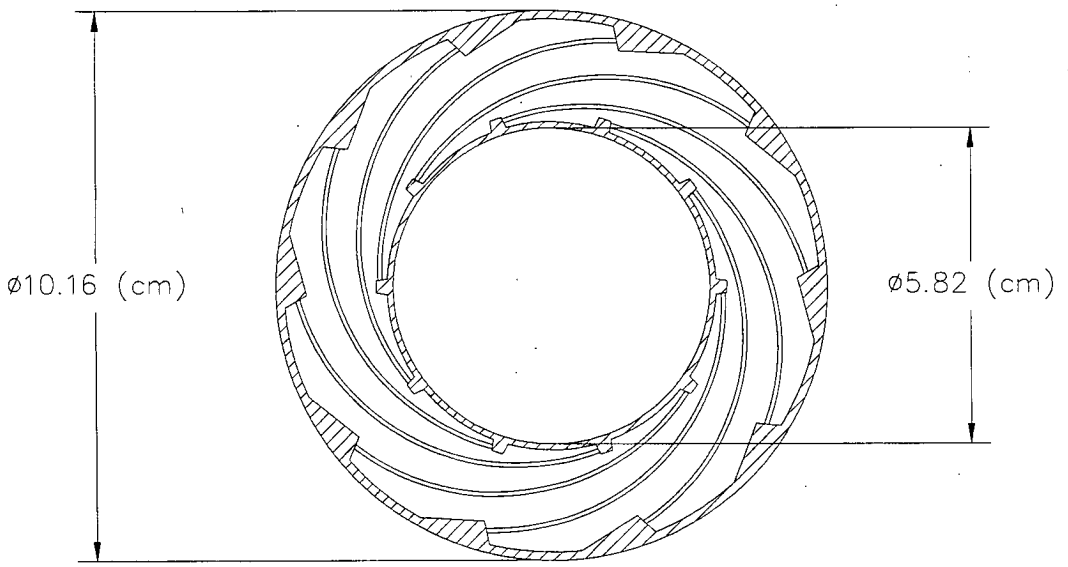

Note: Nominal dimensions

Figure 1.2.3-15 MOATA Plate Bundle Sketches

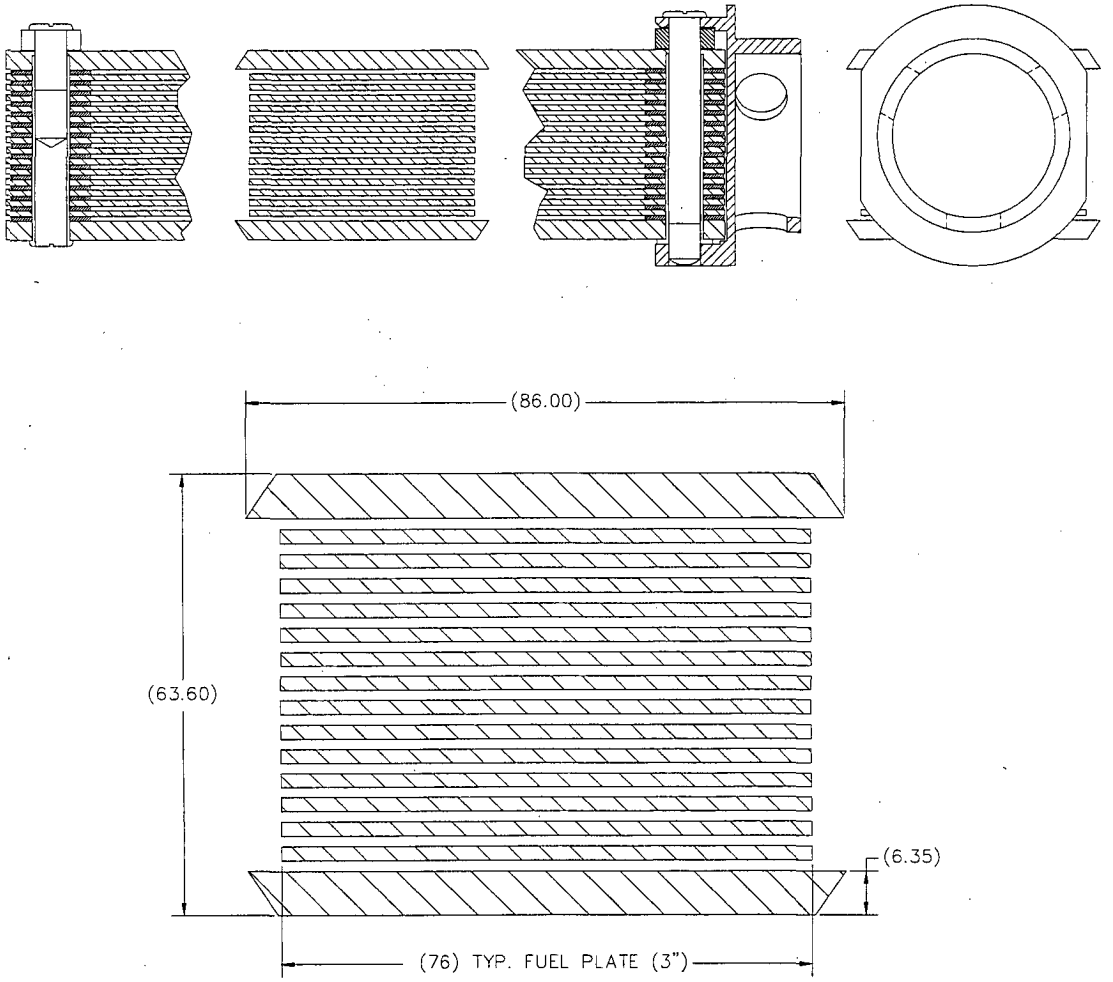

Note: 14-plate bundle configuration. Dimensions are reference values. Bundles with a reduced number of plates retain the plate pitch and compensate by wider side plates and outside spacers to retain overall bundle dimensions.

Figure 1.2.3-16 TPBAR Waste Container and Extension Weldment Sketch

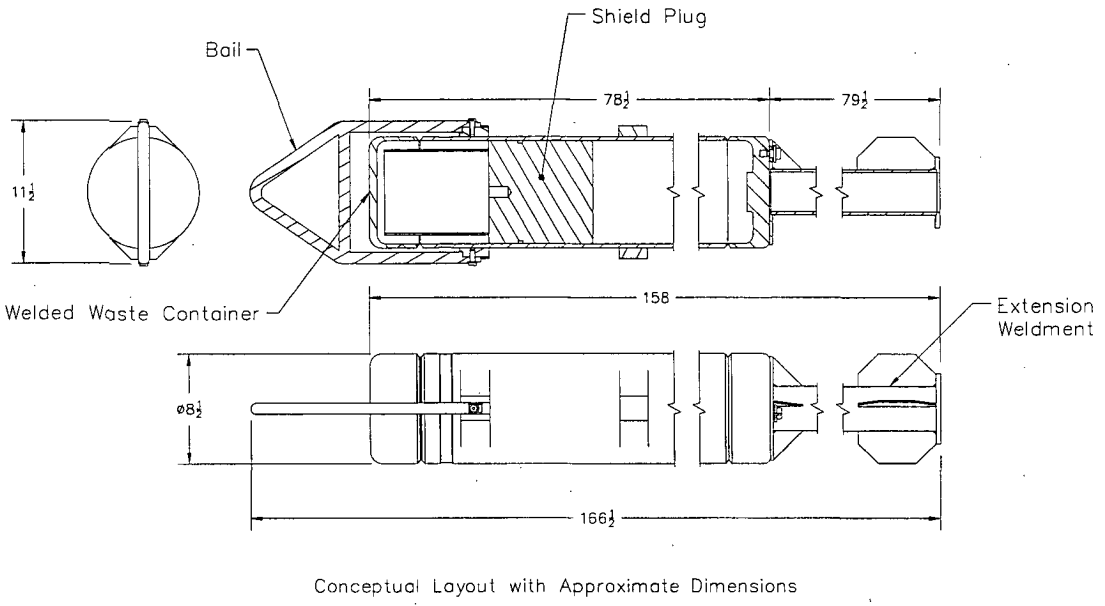

Note: Material of construction is stainless steel.

Figure 1.2.3-17 NAC-LWT with TPBAR Waste Container Payload

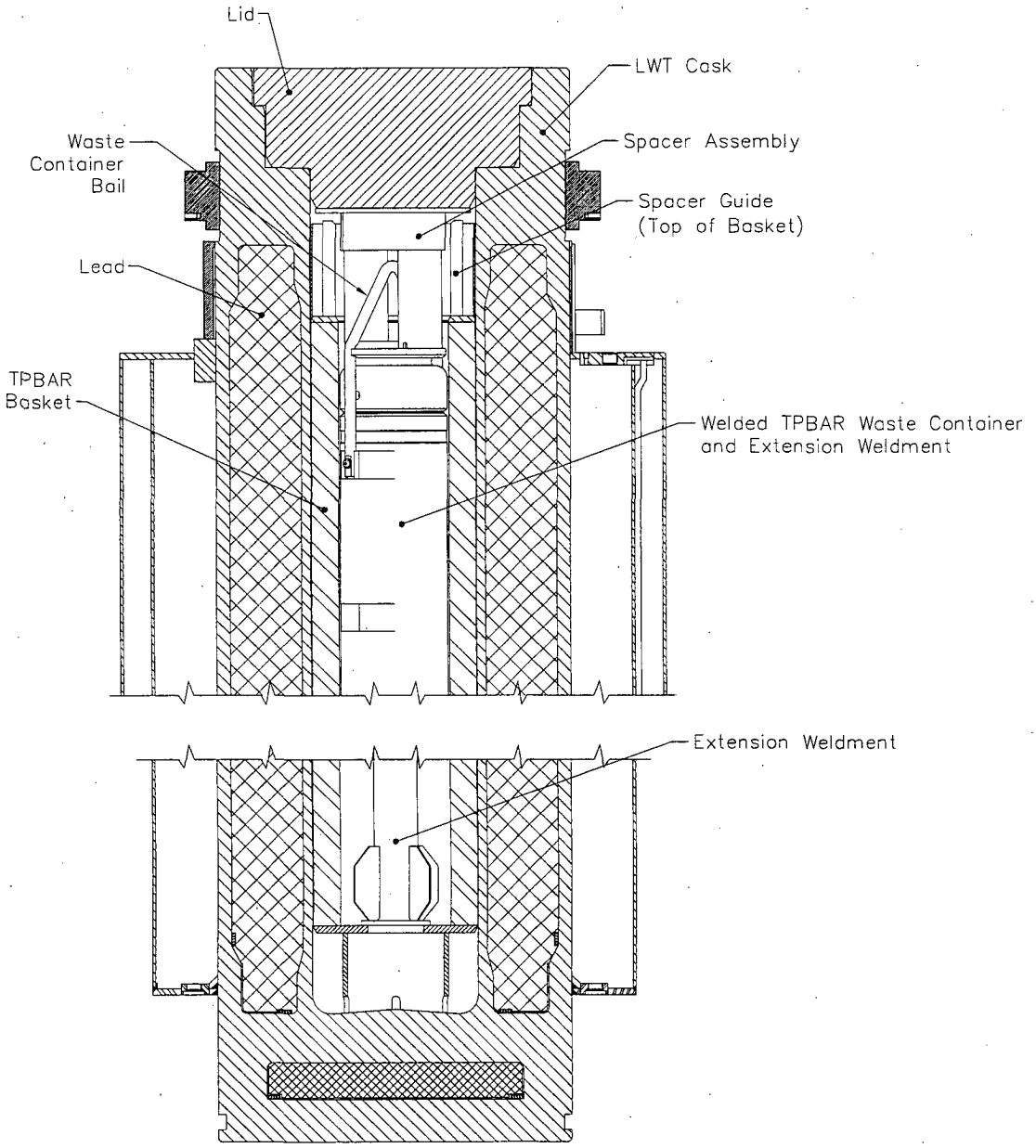

Table 1.2-1 Characteristics of Design Basis TRIGA Fuel Elements Acceptable for Loading in the Poisoned TRIGA Basket

	TRIGA HEU (Notes 1, 2, 6 & 7)	TRIGA LEU (Notes 1, 2, 6 & 7)	TRIGA LEU (Notes 1, 2, 6 & 7)
Fuel Form	Clad U-ZrH rod	Clad U-ZrH rod	Clad U-ZrH rod
Maximum Element Weight, lbs	13.2	13.2	13.2
Maximum Element Length, in	47.74	47.74	47.74
Element Cladding	Stainless Steel	Stainless Steel	Aluminum
Clad Thickness, in	0.02	0.02	0.03
Active Fuel Length, in	15	15	14-15 (Note 4)
Element Diameter, in	1.478 max.	1.478 max.	1.47 max.
Fuel Diameter, in	1.435 max.	1.435 max.	1.41 max.
Maximum Initial U Content/Element, kilograms	0.196	0.845	0.205
Maximum Initial ^{235}U Mass, grams	137	169	41
Maximum Initial ^{235}U Enrichment, weight percent	70	20	20
Zirconium Mass, grams (Note 5)	2060	1886-2300	2300
Hydrogen to Zirconium Ratio, max. (Note 5)	1.6	1.7	1.0
Maximum Average Burnup, MWd/MTU	460,000 (80% ^{235}U)	151,100 (80% ^{235}U)	151,100 (80% ^{235}U)
Minimum Cooling Time	90 days (Note 3)	90 days (Note 3)	90 days (Note 3)

Notes:

1. Mixed TRIGA LEU and HEU contents authorized.
2. TRIGA Standard, instrumented and fuel follower control rod type elements authorized.
3. Maximum decay heat of any element is 7.5 watts.
4. Aluminum clad fuel with 14-inch active fuel is solid and has no central hole with a zirconium rod.
5. Zirconium mass and H/Zr ratio apply to the fuel material (U-Zr-H_x) and do not include the center zirconium rod.
6. Listed TRIGA fuel elements have a 0.225-inch diameter zirconium rod in the center.
7. Dimensions listed are as-fabricated (unirradiated) nominal values.

Table 1.2-2 Characteristics of Design Basis TRIGA Fuel Elements Acceptable for Loading in the Nonpoisoned TRIGA Basket

	TRIGA HEU (Notes 1, 2, 6)	TRIGA LEU (Notes 1, 2, 6)	TRIGA LEU (Notes 1, 2, 6)
Fuel Form	Clad U-ZrH rod (Note 4)	Clad U-ZrH rod (Note 4)	Clad U-ZrH rod (Note 4)
Maximum Element Weight, lbs	13.2	13.2	13.2
Maximum Element Length, in	47.74	47.74	47.74
Element Cladding	Stainless Steel	Stainless Steel	Aluminum
Minimum Clad Thickness, in	0.01	0.01	0.01
Active Fuel Length, in	(Note 5)	(Note 5)	(Note 5)
Maximum Element Diameter, in	1.5 max.	1.5 max.	1.5 max.
Fuel Diameter, in	(Note 5)	(Note 5)	(Note 5)
Maximum Initial U Content/Element, kilograms	0.196	0.845	0.205
Maximum Initial ^{235}U Mass, grams	137	169	41
Maximum Initial ^{235}U Enrichment, weight percent	70	20	20
Zirconium Mass, grams	(Note 5)	(Note 5)	(Note 5)
Hydrogen to Zirconium Ratio, max.	(Note 5)	(Note 5)	(Note 5)
Maximum Average Burnup, MWd/MTU	460,000 (80% ^{235}U)	151,100 (80% ^{235}U)	151,100 (80% ^{235}U)
Minimum Cooling Time	90 days (Note 3)	90 days (Note 3)	90 days (Note 3)

Notes:

1. Mixed TRIGA LEU and HEU contents authorized.
2. TRIGA Standard, instrumented and fuel follower control rod type elements authorized.
3. Maximum decay heat of any element is 7.5 watts.
4. Element may contain zirconium rod in the center.
5. See criticality analyses in Chapter 6, Section 6.4.5.6, for the evaluations determining critical fuel characteristics.
6. Dimensions listed are as-fabricated (unirradiated) nominal values.

Table 1.2-3 Characteristics of Design Basis TRIGA Fuel Cluster Rods

Element Type	TRIGA Fuel Cluster Rod
Max. Rod Length (in)	31.0
Max. Active Length (in)	22.5
Clad Material	Incoloy 800
Min. Clad Thickness (in)	0.015
Fuel Material	U-ZrH
Max. Pellet Diameter (in)	0.53
Max. Rod Weight (kg)	0.65
Min. U in U-ZrH (wt %)	43.0 (LEU) or 9.5 (HEU)[1]
Max. ^{235}U in U (wt %)	19.9 to 93.3
^{235}U Mass (g)	55.0 (LEU) or 46.5 (HEU)
Max. H to Zr Ratio	1.7

[1] Equivalent to a maximum zirconium mass of 357 g for LEU fuel and 457 g for HEU fuel material. Lower weight percents are permitted, provided the maximum zirconium mass limits are not exceeded.

Table 1.2-4 Fuel Characteristics

Parameter	PWR Fuel Assembly	BWR Fuel Assemblies	PWR Rods	High Burnup PWR Rods	High Burnup BWR Rods 7 × 7	High Burnup BWR Rods[1] 8 × 8[2]
Maximum Number of Assemblies, Elements or Rods	[1]	[2]	25 rods	25 rods	25 rods	25 rods
Maximum Overall Weight, lbs	1650	750	N/A	N/A	N/A	N/A
Maximum Overall Length, in	178.25	176.1	162	162	176.1	176.1
Maximum Active Fuel Length, in	150	150	150	150	150	150
Fuel Rod Cladding	Zirc	Zirc	Zirc	Zirc	Zirc	Zirc
Maximum Uranium, kg U	475	198	58.2	65.6	198	198
Maximum Initial ^{235}U, wt %	*See below*[3]	4.0	5.0	5.0	5.0	5.0
Maximum Burnup, MWd/MTU	35,000	30,000	60,000[4]	80,000	60,000 - 80,000	80,000
Maximum Unit Decay Heat, kW	2.5	1.1	0.564	0.92	0.84	0.84
Maximum Cask Decay Heat, kW	2.5	2.2	1.41	2.3	2.1	2.1
Minimum Cool Time, yr	2	2	150 days	150 days	210 - 270 days[5]	150 days

[1] High burnup rods are loaded in a fuel assembly lattice or rod holder. Up to 14 rods, loaded in a rod holder, may be classified as damaged. The lattice may be irradiated.

[2] Includes rods from all larger BWR assembly arrays (e.g., 9 × 9, 10 × 10).

[3] See Table 1.2-5 for maximum PWR fuel enrichment by fuel type.

[4] Up to 2 of the 25 PWR rods may have a maximum burnup of 65,000 MWd/MTU.

[5] Minimum cool time for high burnup BWR 7 x 7 rods is determined by extent of burnup. See Section 5.3.8 and Table 5.3.8-23.

Table 1.2-4 Fuel Characteristics (Continued)

Parameter	Metallic Fuel	Metallic Fuel	Metallic Fuel	MTR HEU	MTR MEU	MTR LEU	TRIGA LEU Element	TRIGA HEU Element	TRIGA Cluster Rod
Maximum Number of Assemblies, Elements or Rods	15 rods (sound)	9 rods (failed)	3 rods (severely failed in filters)	42[1]	42	42[2]	140	140	560
Maximum Overall Weight, lbs	1805	1805	1805	30 (max)[3]	30 (max)[3]	30 (max)[3]	13.2 (max)[3]	8.82 (nom.) 13.2 (max)[3]	1.5[3]
Maximum Overall Length, in	120.5	120.5	120.5	25.4[4]	26.1[4]	26.1[4]	47.74[5]	47.74[5]	31.0
Maximum Active Fuel Length, in	120.0	120.0	120.0	24.8	25.6	25.6	15	15	22.5
Fuel Rod Cladding	Al	Al	Al	Al	Al	Al	Al or SS	Al or SS	Incoloy 800
Maximum Uranium, kg U	54.5	54.5	54.5	0.422 0.511	0.950	2.474 3.368[2]	0.824	0.196	0.0505 (HEU) 0.2894 (LEU)
Maximum Initial ^{235}U, wt %	Natural	Natural	Natural	94	94[6]	25	20	70	95 (HEU)/20 (LEU)
Maximum Burnup, MWd/MTU	1,600	1,600	1,600	Variable up to 660,000[7]	Variable up to 293,300	Variable up to 139,300	151,100 (80% ^{235}U)	460,000 (80% ^{235}U)	600,000 (HEU)/ 140,000 (LEU) (80% ^{235}U)
Maximum Unit Decay Heat, kW	0.036	0.036	0.036	Variable[8]	0.030[8]	0.030[8]	0.0075	0.0075	0.001875
Maximum Cask Decay Heat, kW	0.54	0.54	0.54	1.26	1.26	1.26	1.05	1.05	1.05
Minimum Cool Time, yr	1	1	1	Variable[8]	Variable[8]	Variable[8]	Variable[9]	Variable[9]	Variable[9]

1 For NISTR fuel, 42 assemblies may be cut in half, producing 84 fuel-bearing pieces. Each fuel-bearing piece may contain up to 0.211 kgU.

2 MTR fuel elements having ^{235}U content >470 g (>22 g per plate) are limited to a total of 4 elements in a 7-element basket. Basket openings 1, 2 and 3 shall be blocked by cell block spacers to ensure that MTR elements are not loaded in these openings. Therefore, depending on the number of such 4-element baskets, the maximum number of elements per cask will be reduced accordingly.

3 Maximum weight of fuel element(s), spacer(s) and fuel can, as applicable, per basket module cell shall be 80 pounds.

4 For MTR fuel elements, which are cut to remove nonfuel-bearing hardware prior to transport, a nominal 0.28 inch of nonfuel or spacer hardware will remain above and below the active fuel region to allow for fuel handling operations. The HFBR element, with an element length of 57.24 inches, must be cut prior to shipment. For HEU MTR elements having >380 g ^{235}U but less than 460 g ^{235}U, a minimum of 2.0 cm (0.8 inch) of nonfuel hardware and/or spacers/plates shall be *provided at the ends of the element.*

5 Permissible fuel element length is limited to basket cavity length, which is a minimum 47.74 inches for the basket top module, 30.94 inches for the intermediate modules, and 32.64 inches for the bottom module.

6 Typical MEU enrichment is 45 wt% ^{235}U. Criticality analysis supports up to 94 wt% under the MEU fuel definition.

7 Maximum burnup is 660,000 MWd/MTU for 380g ^{235}U and 577,500 MWd/MTU for 460g ^{235}U

8 Minimum cool times for MTR fuel, down to 30 days, shall be determined using the procedure presented in Section 7.1.5.

9 Minimum cool times for TRIGA fuel elements and fuel cluster rods, down to 90 days, are determined so that the maximum decay heat of any element to be shipped is $\leq$7.5 watts and any fuel cluster rod is $\leq$1.875 watts.

Table 1.2-4 Fuel Characteristics (Continued)

Parameter	DIDO HEU	DIDO MEU	DIDO LEU
Number of Fuel Cylinders per Assembly	4	4	4
Maximum Overall Weight (lb)[1]	15	15	15
Minimum Plate Thickness, in	0.051	0.051	0.051
Minimum Clad Thickness (Al), in	0.00984	0.00984	0.00984
Maximum ^{235}U per Element, g	190	190	190
Maximum Initial ^{235}U, wt %	94	94	94
Minimum Initial ^{235}U, wt %	90	40	19
Maximum Uranium, kg U	0.2111	0.4750	1.0000
Minimum Active Fuel Height, in	23.13	23.13	23.13
Minimum Element Height[2], in	24.21	24.21	24.21
Maximum Burnup, MWd/MTU	577,460	256,650	121,910
Maximum Unit Decay Heat[3], kW	0.025	0.025	0.025
Maximum Cask Decay Heat, kW	1.05	1.05	1.05
Minimum Cool Time[4], yr	Variable	Variable	Variable

1 Maximum weight of fuel element(s), spacer(s) and fuel can, as applicable, per basket module cell shall be 80 pounds.

2 Element height provides for spacing of fissile material. An optional spacer may be used to maintain spacing if the element is cut shorter than 24.21 inches.

3 Maximum unit decay heat of 0.025 kW allowed only in conjunction with spacers for top basket (see Section 7.1.4), otherwise the limit is 0.018 kW.

4 Minimum cool times for DIDO fuel assemblies, down to 180 days, shall be determined using the procedure presented in Section 7.1.4.

Table 1.2-5 PWR Fuel Characteristics

Fuel Type	No. of Fuel Rods	Max. Assembly Length (in.)	Max. Assembly Weight (lb)	Max. Enrich. (wt %)	Max. MTU	Pitch (in.)	Rod Dia. (in.)	Clad Thick. (in.)	Pellet Dia.(in.)	Max. Active Length (in.)
B&W 15 x 15	208	165.63	1515	3.5	0.4750	0.5680	0.430	0.0265	0.3686	144.0
B&W 17 x 17	264	165.72	1505	3.5	0.4658	0.5020	0.379	0.0240	0.3232	143.0
CE 14 x 14	176	157.00	1270	3.7	0.4037	0.5800	0.440	0.0280	0.3765	137.0
CE 16 x 16	236	178.25	1430	3.7	0.4417	0.5060	0.382	0.0250	0.3250	150.0
WE 14 x 14 Std	179	159.71	1302	3.7	0.4144	0.5560	0.422	0.0225	0.3674	145.2
WE 14 x 14 OFA	179	159.71	1177	3.7	0.3612	0.5560	0.400	0.0243	0.3444	144.0
WE 15 x 15	204	159.71	1472	3.5	0.4646	0.5630	0.422	0.0242	0.3659	144.0
WE 17 x 17 Std	264	159.77	1482	3.5	0.4671	0.4960	0.374	0.0225	0.3225	144.0
WE 17 x 17 OFA	264	160.10	1373	3.5	0.4282	0.4960	0.360	0.0225	0.3088	144.0
Ex/ANF 14 x 14 WE	179	160.13	1271	3.7	0.3741	0.5560	0.424	0.0300	0.3505	144.0
Ex/ANF 14 x 14 CE	176	157.24	1292	3.7	0.3814	0.5800	0.440	0.0310	0.3700	134.0
Ex/ANF 15 x 15 WE	204	159.70	1433	3.7	0.4410	0.5630	0.424	0.0300	0.3565	144.0
Ex/ANF 17 x 17 WE	264	159.71	1348	3.5	0.4123	0.4960	0.360	0.0250	0.3030	144.0

Table 1.2-6 BWR Fuel Characteristics

Fuel Type	No. of Fuel Rods	No. of Water Rods	Max. Assembly Length (in.)	Max. Assembly Weight (lb)	Max. MTU	Pitch (in.)	Rod Dia. (in.)	Clad Thick. (in.)	Pellet Dia. (in.)	Max. Active Length (in.)
GE 7 x 7	49	0	175.9	678.9	0.1923	0.738	0.563	0.037	0.477	146
GE 8 x 8-1	63	1	175.9	681.0	0.1880	0.640	0.493	0.034	0.416	146
GE 8 x 8-2	62	2	175.9	681.0	0.1847	0.640	0.483	0.032	0.410	150[1]
GE 8 x 8-4	60	4	176.1	665.0	0.1787	0.640	0.484	0.032	0.410	150[1,2]
GE 9 x 9	74	2[3]	176.1	646.0	0.1854	0.566	0.441	0.028	0.376	150[1,4]
	79	2	176.1	646.0	0.1979	0.566	0.441	0.028	0.376	150[1,4]
Ex/ANF 7 x 7	49	0	171.3	619.1	0.1960	0.738	0.570	0.036	0.490	144
Ex/ANF 8 x 8-1	63	1	171.3	562.3	0.1764	0.641	0.484	0.036	0.4045	145.2
Ex/ANF 8 x 8-2	62	2	176.1	587.8	0.1793	0.641	0.484	0.036	0.4045	150
Ex/ANF 9 x 9	79	2	176.1	575.3	0.1779	0.572	0.424	0.03	0.3565	150
	74	2[3]	176.1	575.3	0.1666	0.572	0.424	0.03	0.3565	150

[1] 6" natural uranium blankets on top and bottom.
[2] May have 1 large water hole - 3.2 cm ID, 0.1 cm thickness.
[3] 2 large water holes occupying 7 fuel rod locations - 2.5 cm ID, 0.07 cm thickness.
[4] Shortened active fuel length in some rods.

Table 1.2-7 Characteristics of General Atomics Irradiated Fuel Material (GA IFM)

Parameter	RERTR	HTGR
Maximum Number of Assemblies, Elements or Rods	13 intact; 7 sectioned	N/A
Maximum Loaded Enclosure Weight, lbs	76.0	71.5
Maximum Fuel Weight, lbs	23.73	23.52
Maximum Overall Length, in	29.92	N/A
Maximum Active Fuel Length, in	22.05	N/A
Fuel Material	U-ZrH	UC_2, UCO, UO_2, $(Th,U)C_2$, $(Th,U)O_2$
Fuel Rod Cladding	Incoloy 800	N/A
Maximum Uranium, kg U	3.86	0.21
Maximum Initial ^{235}U, wt %	19.7	93.15
Maximum Burnup, MWd/MTU	N/A	N/A
Maximum Unit Decay Heat, W	11.0	2.05
Maximum Cask Decay Heat, W	13.05	13.05
Earliest Shipment Date	1/1/96	1/1/96
Maximum Activity, Ci	2920	483

Table 1.2-8 Typical Production TPBAR Characteristics[1]

Parameter Description	Value
Maximum Number of TPBARs per Consolidation Canister	300
Number of Consolidation Canisters per Cask	1
TPBAR Clad Material	316 L Stainless Steel
Rod Length[2], in	153.04
Rod Diameter[2], in	0.381
Maximum Rod Heat Load, W	2.31
Maximum Cask Heat Load, kW	0.693
Maximum Tritium Content per Rod, gram	1.2
Maximum Activity per Cask[3], Ci	3.84×10^6
Loaded TPBAR Consolidation Canister Maximum Weight, pounds[4]	1,000
Maximum Event Failed Tritium Release (Ci/rod)	<55
Minimum Cooling Time, days	30

1 Refer to Section 1.5, Chapter 1 Appendices, Unclassified DOE Reference Documents and Drawings.
2 Beginning of life, nominal, unirradiated dimensions.
3 Primary dose contribution: 1.1×10^4 Ci ^{60}Co/cask
4 The bounding weight employed in the structural analysis.

Table 1.2-9 PULSTAR Fuel Characteristics

Description	Value
Maximum Pellet Diameter (inch)	0.423
Minimum Element (Rod) Cladding Thickness (inch)	0.0185
Minimum Element (Rod) Diameter (inch)	0.470
Maximum Active Fuel Height (inch)	24.1
Element (Rod) Length (inch)	26.2
Rod Pitch (inch)	0.525 × 0.607
Assembly Length (inch)	38
Box Outside Width (inch)	2.745 × 3.155
Box Thickness (inch)	0.06
Maximum Assembly or Loaded Can Weight (lb) [1]	80
Maximum PULSTAR Can Content Weight (lb)[2]	39.6
Maximum Enrichment (wt % ^{235}U)	6.5
Maximum ^{235}U Content per Element (g)	33
No. of Elements (Rods) per Assembly	25
No. of Elements (Rods) per Can[2]	25
Maximum Depletion (%^{235}U)	45
Minimum Cool Time (yrs)	1.5
Maximum Heat Load per Assembly (W)	30
Maximum Heat Load per Element (W)	1.2

[1] Listed weight is the maximum weight evaluated for the structural calculation to bound all payload configurations, including loaded cans, and spacers. Nominal PULSTAR assembly weight is 45 pounds.

[2] The contents of a PULSTAR can are restricted to the equivalent of the fuel material in 25 PULSTAR fuel elements and of the displaced volume of 25 intact PULSTAR fuel elements. Fuel material may be in damaged form including fuel debris. The listed weight represents the can content limit established by the structural analyses.

Table 1.2-10 Spiral Fuel Assembly Characteristics

Parameter	Value
Number of elements per assembly	10
Fuel element type	Curved plate
Nominal dimensions of element (cm)	0.147 × 7.33 × 63.5 (individual plate)
Chemical form of fuel meat	U-Al_x-alloy
Cladding material	Aluminum
Nominal over-all dimensions (cm)	63.818 (height) × 10.16 diameter[1]
Max total weight of ^{235}U (g)	160 (total per assembly)
Maximum enrichment (wt % ^{235}U)	85
Side plate material	Aluminum (inner and outer tubes)
Nominal side plate – dimensions (cm)	Inner 6.045 OD, 5.82 ID x 63.818 Outer 10.16 OD, 9.85 ID x 63.818[2]
Max. assembly weight (lb)	18[3]
Assembly maximum heat load (W)	15.7[4]
Burnup/cool time limit	Variable[5]

1 Cropped to fit within ANSTO fuel basket module nominal height of 28.3 inches.
2 Criticality evaluations reduced inner and outer shell thickness to 0.01 cm to provide additional moderator within the assembly.
3 Typical assembly weight is 7.9 pounds. Bounding structural analysis weight is listed.
4 Thermal and shielding evaluation employed 18 W per element. Based on cool time constraint, 15.7 W represents maximum heat load.
5 Spiral fuel is contrained to DIDO MEU cool time limits as a function of burnup. Minimum cool times for the spiral assembly, down to 270 days, shall be determined using the procedure presented in Section 7.1.4 for 18 W DIDO MEU fuel.

Table 1.2-11 MOATA Plate Bundle Characteristics

Parameter	Value
Maximum number of elements per assembly	14
Nominal dimensions of element (cm)	66 cm long, 7.6 cm wide and 0.203 cm thick
Nominal dimensions of fuel meat (cm)	58.4 cm long, 6.99 cm wide and 0.1016 cm thick (bounding active fuel width evaluated to a maximum of 7.32 cm)
Chemical form of fuel meat	U-Al_x-alloy
Cladding material	Aluminum
Nominal clad thickness (cm)	0.05 cm (evaluated to 0.01 cm minimum)
Plate spacer thickness (cm)	0.147 min, 0.152 max (evaluated to 0.18 maximum)
Maximum weight of ^{235}U (g) per plate	22.3
Maximum enrichment (wt % ^{235}U)	92
Nominal side plate thickness (cm)	0.635 (bounding evaluation replaced by cavity moderator)
Max. assembly weight (lb)	18[1]
Maximum heat load per assembly (W)[2]	3 (total for 14 fuel plates)
Maximum burnup	30,000 MWd/MTU or 4.1 % depletion ^{235}U
Minimum cool time (years)	10

[1] Typical assembly weight is 13.6 pounds. Bounding structural analysis weight is listed.
[2] Actual heat load at limiting burnup and cool time < 1 Watt. Thermal evaluations at 3 Watt per bundle.

Table 1.2-12 Typical TPBAR Segment Characteristics in Waste Container

Parameter/Description	Value
Maximum Number of TPBAR Segments and Debris per Waste Container, equivalent number of TPBARs	55
Number of Waste Containers per Cask	1
Waste Container Material	316L Stainless Steel
Maximum Tritium Content per TPBAR equivalent, gram	1.2
Maximum Activity per Cask, Ci	6.66 x10+5
Maximum Heat Load per Waste Container, watts	127
Maximum Loaded Waste Container Weight, pounds	700[1]
Minimum Cooling Time, years	90

[1] Design basis weight of a loaded waste container is 700 pounds. Applying a maximum payload of 55 TPBARs, with storage canister, yields a maximum weight of 662 pounds. Use of shrouds to contain segments and/or TPBAR debris reduces overall waste container weight due to a reduction in TPBAR payload capacity resulting from the reduced container free volume.

Table 1.2-13 Solid, Irradiated Hardware Characteristics[1]

Parameter	Value
Maximum Content Weight	4,000 pounds [2]
Maximum Content Length	171.5 inches [3]
Hardware Material	Solid, irradiated and contaminated fuel assembly structural or reactor internal component hardware [4]
Maximum Cask Heat Load	1.0 KW
Maximum Activity per Cask, Ci	6.0 x 10E+6
Maximum Source Term, gamma/sec	6.0 x 10E+15
Maximum Source Term, MeV/sec	1.0 x 10E+15

1 Maximum content weight includes any spacers, containers or dunnage loaded in the cavity with the irradiated hardware.

2 Length of cavity is limited to 171.5 inches by the installation and use of an irradiated hardware spacer bolted to the underside of the closure lid.

3 Appropriate secondary containers will be used to prevent any contact and cross-contamination between the carbon steel contents and the stainless steel internals of the cask cavity.

4 The irradiated hardware contents may contain fissile material, provided the quantity of fissile material does not exceed a Type A quantity and does not exceed the mass limits of 10 CFR 71.53.

Figure Withheld Under 10 CFR 2.390

NAC INTERNATIONAL

LEGAL WEIGHT TRUCK CASK
BODY ASSEMBLY
SAFETY ANALYSIS REPORT

PROJECT	DRAWING	REV
315-40	02	22
	SH 1 OF 2	12:57PM 2-14-2008

Figure Withheld Under 10 CFR 2.390

NAC INTERNATIONAL

LEGAL WEIGHT TRUCK CASK
BODY ASSEMBLY
SAFETY ANALYSIS REPORT

PROJECT	DRAWING	REV
315-40	02	22
	SH 2 OF 2	12:58PM 2-14-2006

Figure Withheld Under 10 CFR 2.390

NAC INTERNATIONAL

LEGAL WEIGHT TRUCK
TRANSPORT CASK ASSY,
120 TRIGA FUEL ELEMENTS
OR 480 CLUSTER RODS

PROJECT 315-40		DRAWING 079	REV 5
SCALE 1/8	WEIGHT	SH 1 OF 1	2:16PM 2-20-2008

Figure Withheld Under 10 CFR 2.390

NAC INTERNATIONAL

LEGAL WEIGHT TRUCK
TRANSPORT CASK ASSY
140 TRIGA ELEMENTS

PROJECT 315-40		DRAWING 084	REV 4
1/12		SH 1 OF 1	2:04PM 3-21-2006

February 2008

Revision LWT-08B

NAC-LWT

Legal Weight Truck Cask System

SAFETY ANALYSIS REPORT

Volume 2 of 2

Docket No. 71-9225

NAC INTERNATIONAL

Atlanta Corporate Headquarters: 3930 East Jones Bridge Road, Norcross, Georgia 30092 USA
Phone 770-447-1144, Fax 770-447-1797, www.nacintl.com

List of Effective Pages

LIST OF EFFECTIVE PAGES

Chapter 1

1-i thru 1-ii ..... Revision LWT-07G
1-iii ..... Revision LWT-08B
1-iv ..... Revision LWT-07G
1-1 thru 1-5 ..... Revision LWT-08B
1.1-1 thru 1.1-3 ..... Revision LWT-08B
1.2-1 thru 1.2-3 ..... Revision LWT-07G
1.2-4 thru 1.2-12 ..... Revision LWT-08B
1.2-13 thru 1.2-49 ..... Revision LWT-07G
1.3-1 ..... Revision 38
1.4-1 ..... Revision 38
1.5-1 ..... Revision 38

73 drawings in the
Chapter 1 List of Drawings

Chapter 1 Appendices 1-A
through 1-G

Chapter 2

2-i thru 2-xxix ..... Revision 38
2-1 ..... Revision 38
2.1.1-1 thru 2.1.1-2 ..... Revision 38
2.1.2-1 thru 2.1.2-3 ..... Revision 38
2.1.3-1 thru 2.1.3-8 ..... Revision 38
2.2.1-1 thru 2.2.1-3 ..... Revision 38
2.3-1 ..... Revision 38
2.3.1-1 thru 2.3.1-13 ..... Revision 38
2.4-1 ..... Revision 38
2.4.1-1 ..... Revision 38
2.4.2-1 ..... Revision 38
2.4.3-1 ..... Revision 38
2.4.4-1 ..... Revision 38
2.4.5-1 ..... Revision 38
2.4.6-1 ..... Revision 38
2.5.1-1 thru 2.5.1-11 ..... Revision 38
2.5.2-1 thru 2.5.2-17 ..... Revision 38
2.6.1-1 thru 2.6.1-7 ..... Revision 38
2.6.2-1 thru 2.6.2-7 ..... Revision 38
2.6.3-1 ..... Revision 38
2.6.4-1 ..... Revision 38
2.6.5-1 thru 2.6.5-2 ..... Revision 38
2.6.6-1 ..... Revision 38
2.6.7-1 thru 2.6.7-136 ..... Revision 38
2.6.8-1 ..... Revision 38
2.6.9-1 ..... Revision 38
2.6.10-1 thru 2.6.10-15 ..... Revision 38
2.6.11-1 thru 2.6.11-12 ..... Revision 38
2.6.12-1 thru 2.6.12-95 ..... Revision 38
2.7-1 ..... Revision 38
2.7.1-1 thru 2.7.1-118 ..... Revision 38
2.7.2-1 thru 2.7.2-24 ..... Revision 38
2.7.3-1 thru 2.7.3-5 ..... Revision 38
2.7.4-1 ..... Revision 38
2.7.5-1 thru 2.7.5-5 ..... Revision 38
2.7.6-1 thru 2.7.6-4 ..... Revision 38
2.7.7-1 thru 2.7.7-72 ..... Revision 38
2.8-1 ..... Revision 38
2.9-1 thru 2.9-14 ..... Revision 38
2.10.1-1 thru 2.10.1-3 ..... Revision 38
2.10.2-1 thru 2.10.2-49 ..... Revision 38
2.10.3-1 thru 2.10.3-18 ..... Revision 38
2.10.4-1 thru 2.10.4-11 ..... Revision 38
2.10.5-1 ..... Revision 38
2.10.6-1 thru 2.10.6-19 ..... Revision 38
2.10.7-1 thru 2.10.7-66 ..... Revision 38
2.10.8-1 thru 2.10.8-68 ..... Revision 38
2.10.9-1 thru 2.10.9-9 ..... Revision 38
2.10.10-1 thru 2.10.10-97 ..... Revision 38
2.10.11-1 thru 2.10.11-10 ..... Revision 38

LIST OF EFFECTIVE PAGES (Continued)

2.10.12-1 thru 2.10.12-31 ..... Revision 38
2.10.13-1 thru 2.10.13-17 ..... Revision 38
2.10.14-1 thru 2.10.14-38 ..... Revision 38
2.10.15-1 thru 2.10.15-10 ..... Revision 38

Chapter 3
3-i thru 3-v ..... Revision 38
3.1-1 thru 3.1-2 ..... Revision 38
3.2-1 thru 3.2-11 ..... Revision 38
3.3-1 ..... Revision 38
3.4-1 thru 3.4-81 ..... Revision 38
3.5-1 thru 3.5-32 ..... Revision 38
3.6-1 thru 3.6-12 ..... Revision 38

Chapter 4
4-i thru 4-ii ..... Revision LWT-07G
4-iii ..... Revision LWT-08B
4-iv ..... Revision LWT-07G
4.1-1 thru 4.1-3 ..... Revision LWT-08B
4.2-1 thru 4.2-13 ..... Revision LWT-08B
4.3-1 thru 4.3-6 ..... Revision LWT-08B
4.3-7 ..... Revision LWT-07G
4.4-1 ..... Revision LWT-08B
4.5-1 thru 4.5-28 ..... Revision 38
4.5-29 thru 4.5-53 ..... Revision LWT-07G
4.5-54 thru 4.5-90 ..... Revision LWT-07G

Chapter 5
5-i thru 5-x ..... Revision LWT-07G
5-1 ..... Revision 38
5-2 ..... Revision 38
5-3 ..... Revision 38
5.1.1-1 thru 5.1.1-17 ..... Revision LWT-07G
5.2.1-1 thru 5.2.1-7 ..... Revision 38
5.3.1-1 ..... Revision 38
5.3.2-1 ..... Revision 38
5.3.3-1 thru 5.3.3-8 ..... Revision 38
5.3.4-1 thru 5.3.4-19 ..... Revision 38
5.3.5-1 thru 5.3.5-4 ..... Revision 38
5.3.6-1 thru 5.3.6-18 ..... Revision 38
5.3.7-1 thru 5.3.7-15 ..... Revision LWT-07G
5.3.8-1 thru 5.3.8-24 ..... Revision 38
5.3.9-1 thru 5.3.9-26 ..... Revision 38
5.3.10-1 thru 5.3.10-14 ..... Revision 38
5.3.11-1 thru 5.3.11-48 ..... Revision 38
5.3.12-1 thru 5.3.12-26 ..... Revision 38
5.3.13-1 thru 5.3.13-17 ..... Revision 38
5.3.14-1 thru 5.3.14-20 ..... Revision 38
5.3.15-1 thru 5.3.15-9 ..... Revision 38
5.3.16-1 thru 5.3.16-5 ..... Revision 38
5.3.17-1 thru 5.3.17-8 ..... Revision 38
5.4.1-1 thru 5.4.1-6 ..... Revision 38

Chapter 6
6-i thru 6-xi ..... Revision LWT-07G
6-1 ..... Revision 38
6.1-1 thru 6.1-4 ..... Revision 38
6.2-1 ..... Revision 38
6.2.1-1 thru 6.2.1-3 ..... Revision 38
6.2.2-1 thru 6.2.2-3 ..... Revision 38
6.2.3-1 thru 6.2.3-7 ..... Revision 38
6.2.4-1 ..... Revision 38
6.2.5-1 thru 6.2.5-5 ..... Revision 38
6.2.6-1 thru 6.2.6-3 ..... Revision LWT-07G
6.2.7-1 thru 6.2.7-2 ..... Revision 38
6.2.8-1 thru 6.2.8-3 ..... Revision 38
6.2.9-1 thru 6.2.9-4 ..... Revision 38
6.2.10-1 thru 6.2.10-3 ..... Revision 38
6.2.11-1 thru 6.2.11-3 ..... Revision 38
6.2.12-1 thru 6.2.12-4 ..... Revision 38

LIST OF EFFECTIVE PAGES (Continued)

6.3.1-1 thru 6.3.1-5 ..... Revision 38
6.3.2-1 thru 6.3.2-4 ..... Revision 38
6.3.3-1 thru 6.3.3-8 ..... Revision 38
6.3.4-1 thru 6.3.4-9 ..... Revision 38
6.3.5-1 thru 6.3.5-12 ..... Revision LWT-07G
6.3.6-1 thru 6.3.6-9 ..... Revision 38
6.3.7-1 thru 6.3.7-4 ..... Revision 38
6.3.8-1 thru 6.3.8-7 ..... Revision 38
6.3.9-1 thru 6.3.9-7 ..... Revision 38
6.4.1-1 thru 6.4.1-10 ..... Revision 38
6.4.2-1 thru 6.4.2-10 ..... Revision 38
6.4.3-1 thru 6.4.3-33 ..... Revision 38
6.4.4-1 thru 6.4.4-24 ..... Revision 38
6.4.5-1 thru 6.4.5-32 ..... Revision LWT-08B
6.4.6-1 thru 6.4.6-7 ..... Revision LWT-07G
6.4.6-8 ..... Revision LWT-08B
6.4.6-9 thru 6.4.6-23 ..... Revision LWT-07G
6.4.7-1 thru 6.4.7-14 ..... Revision 38
6.4.8-1 thru 6.4.8-14 ..... Revision 38
6.4.9-1 thru 6.4.9-10 ..... Revision 38
6.4.10-1 thru 6.4.10-18 ..... Revision 38
6.5.1-1 thru 6.5.1-13 ..... Revision 38
6.5.2-1 thru 6.5.2-4 ..... Revision 38
6.5.3-1 thru 6.5.3-2 ..... Revision 38

Appendix 6.6

6.6-i thru 6.6-iii ..... Revision LWT-07G
6.6-1 ..... Revision 38
6.6.1-1 thru 6.6.1-111 ..... Revision 38
6.6.2-1 thru 6.6.2-56 ..... Revision 38
6.6.3-1 thru 6.6.3-73 ..... Revision 38
6.6.4.-1 thru 6.6.4-77 ..... Revision 38
6.6.5-1 thru 6.6.5-101 ..... Revision 38
6.6.6-1 thru 6.6.6-158 .... Revision LWT-07G
6.6.7-1 thru 6.6.7-84 ..... Revision 38
6.6.8-1 thru 6.6.8-189 ..... Revision 38
6.6.9-1 thru 6.6.9-52 ..... Revision 38
6.6.10-1 thru 6.6.10-33 ..... Revision 38
6.6.11-1 thru 6.6.11-47 ..... Revision 38
6.6.12-1 thru 6.6.12-20 ..... Revision 38
6.6.13-1 thru 6.6.13-22 ..... Revision 38
6.6.14-1 thru 6.6.14-7 ..... Revision 38

Chapter 7

7-i thru 7-ii ..... Revision LWT-07G
7.1-1 thru 7.1-11 ..... Revision LWT-08B
7.1-12 thru 7.1-32 ..... Revision LWT-07G
7.1-33 thru 7.1-51 ..... Revision LWT-08B
7.2-1 thru 7.2.1-12 ..... Revision 38
7.3-1 thru 7.3-2 ..... Revision LWT-08B

Chapter 8

8-i ..... Revision 38
8.1-1 thru 8.1-11 ..... Revision LWT-08B
8.2-1 thru 8.2-4 ..... Revision LWT-08B
8.3-1 thru 8.3-5 ..... Revision 38

Chapter 9

9-i ..... Revision LWT-08B
9-1 thru 9-10 ..... Revision LWT-08B

Chapter 4

Table of Contents

4 CONTAINMENT 4.1-1
4.1 Containment Boundary 4.1-1
4.1.1 Containment Penetrations 4.1-1
4.1.2 Seals and Welds 4.1-1
4.1.3 Closure 4.1-3
4.2 Containment Requirements for Normal Conditions of Transport 4.2-1
4.2.1 Containment of Radioactive Material 4.2-1
4.2.2 Pressurization of Containment Vessel 4.2-8
4.2.3 Containment Criteria 4.2-9
4.3 Containment Requirements for Hypothetical Accident Conditions 4.3-1
4.3.1 Fission Gas Products 4.3-1
4.3.2 Containment of Radioactive Materials 4.3-1
4.3.3 Tritium Contamination Issues 4.3-5
4.4 Special Requirements 4.4-1
4.5 Appendices 4.5-1
4.5.1 Tetrafluoroethylene O-Rings 4.5-1
4.5.2 Metallic O-Rings 4.5-10
4.5.3 Viton® O-Rings 4.5-23
4.5.4 SAS2H Output and Group A_2 Values for Design Basis PWR, BWR, TRIGA, MTR and DIDO Fuel 4.5-29
4.5.5 Containment Analysis of MTR Fuel Elements 4.5-54
4.5.6 Evaluation of Normal Conditions Allowable Leakage Rate for 25 BWR High Burnup Rods with up to 14 Damaged Rods 4.5-61
4.5.7 Containment Analysis of DIDO Fuel Assemblies 4.5-66
4.5.8 Containment Analysis for PULSTAR Fuel Elements 4.5-72
4.5.9 Metallic Face Seal 4.5-78
4.5.10 Containment Analysis of ANSTO Basket Payloads 4.5-90

List of Figures

Figure 4.5-1 SAE International Aerospace Standard AS8791 ..... 4.5-2
Figure 4.5-2 Metallic O-rings Technical Bulletin..... 4.5-11
Figure 4.5-3 Parker Seals Material Report on the Viton® Material..... 4.5-25

List of Tables

Table 4.2-1 Release Fractions: Normal and Accident Conditions 4.2-10
Table 4.2-2 Allowable Release Rates for NAC-LWT Cask Contents: Normal Conditions 4.2-11
Table 4.2-3 Cask Free Volumes and Pressures 4.2-12
Table 4.2-4 Leak Rate and Leak Test Sensitivity - Normal Conditions 4.2-13
Table 4.3-1 A_2 Calculation for PWR Spent Fuel 4.3-6
Table 4.3-2 Standard Leak Rates for Accident Conditions 4.3-6
Table 4.3-3 A_2 Calculation for 25 High Burnup PWR Spent Fuel Rods 4.3-7
Table 4.3-4 A_2 Calculation for 25 High Burnup BWR Spent Fuel Rods 4.3-7

Table 4.5-1 Westinghouse 15×15 SAS2H Output and Group A_2 Value (Gas) 4.5-30
Table 4.5-2 Westinghouse 15×15 SAS2H Output and Group A_2 Value (Volatiles) 4.5-30
Table 4.5-3 Westinghouse 15×15 SAS2H Output and Group A_2 Value (Fuel Fines) 4.5-31
Table 4.5-4 General Electric 7×7 SAS2H Output and Group A_2 Value (Gas) 4.5-33
Table 4.5-5 General Electric 7×7 SAS2H Output and Group A_2 Value (Volatiles) 4.5-33
Table 4.5-6 General Electric 7×7 SAS2H Output and Group A_2 Value (Fuel Fines) 4.5-34
Table 4.5-7 TRIGA (FLIP-LEU II) SAS2H Output and Group A_2 Value (Gas) 4.5-36
Table 4.5-8 TRIGA (FLIP-LEU II) SAS2H Output and Group A_2 Value (Volatiles) 4.5-36
Table 4.5-9 TRIGA (FLIP-LEU II) SAS2H Output and Group A_2 Value (Fuel Fines) 4.5-37
Table 4.5-10 MTR HEU SAS2H Output and Group A_2 Value (Gas) 4.5-39
Table 4.5-11 MTR HEU SAS2H Output and Group A_2 Value (Volatiles) 4.5-39
Table 4.5-12 MTR HEU SAS2H Output and Group A_2 Value (Fuel Fines) 4.5-40
Table 4.5-13 25 High Burnup BWR-Rod SAS2H Output and Group A_2 Value (Gas) 4.5-42
Table 4.5-14 25 High Burnup BWR-Rod SAS2H Output and Group A_2 Value (Volatiles) .. 4.5-42
Table 4.5-15 25 High Burnup BWR-Rod SAS2H Output and Group A_2 Value (Fuel Fines) 4.5-43
Table 4.5-16 25 High Burnup PWR-Rod SAS2H Output and Group A_2 Value (Gas) 4.5-45
Table 4.5-17 25 High Burnup PWR-Rod SAS2H Output and Group A_2 Value (Volatiles) ... 4.5-45
Table 4.5-18 25 High Burnup PWR-Rod SAS2H Output and Group A_2 Value (Fuel Fines) 4.5-46
Table 4.5-19 DIDO LEU SAS2H Output and Group A_2 Value (Gas) 4.5-48
Table 4.5-20 DIDO LEU SAS2H Output and Group A_2 Value (Volatiles) 4.5-48
Table 4.5-21 DIDO LEU SAS2H Output and Group A_2 Value (Fuel Fines) 4.5-49
Table 4.5-22 LEU TRIGA Cluster Rod SAS2H Output and Group A_2 Value (Gas) 4.5-51
Table 4.5-23 LEU TRIGA Cluster Rod SAS2H Output and Group A_2 Value (Volatiles) 4.5-51
Table 4.5-24 LEU TRIGA Cluster Rod SAS2H Output and Group A_2 Value (Fuel Fines) ... 4.5-52

List of Tables (Continued)

Table 4.5-25 Pressure Summary for PULSTAR Fuel 4.5-74
Table 4.5-26 PULSTAR Fuel SAS2H Output and Group A2 Value (Gas) 4.5-74
Table 4.5-27 PULSTAR Fuel SAS2H Output and Group A_2 Value (Volatiles) 4.5-74
Table 4.5-28 PULSTAR Fuel SAS2H Output and Group A_2 Value (Fuel Fines) 4.5-75
Table 4.5-29 PULSTAR Fuel Containment Release Fractions 4.5-77
Table 4.5-30 Containment Analysis Results for PULSTAR Fuel Payloads 4.5-77
Table 4.5-31 PULSTAR Fuel Leakage Rate Calculation 4.5-77

4 CONTAINMENT

4.1 Containment Boundary

The containment boundary for the NAC-LWT cask consists of the 0.75-inch thick inner shell, the 4.0-inch thick bottom end plate, the 11.25-inch thick lid, and the upper ring forging. The inner shell is Type XM-19 stainless steel and the other components are Type 304 stainless steel. The valves used for filling and draining the cask cavity are not considered to be part of containment; this function is provided by the valve port covers. There are two port cover designs: alternate and Alternate B. The alternate port cover is fabricated from SA-705, Grade 630, condition H1150 precipitation-hardened stainless steel. The Alternate B port cover is fabricated from XM-19 stainless steel and is designed to withstand a higher MNOP and to provide a leaktight containment boundary. The closure lid's metallic O-ring seal and the port cover's Viton® O-ring (alternate port cover) or metallic face seal (Alternate B port cover) are also part of the containment boundary. The sealing surfaces for O-rings and seals are machined in accordance with seal manufacturers' recommendations to a finish suitable to achieve reliable sealing of the containment. The metal face seal, located on the Alternate B port cover face, is in a 0.125-inch counterbore with a suitable surface finish, and provides a leaktight containment boundary seal when the Alternate B port cover design is used.

4.1.1 Containment Penetrations

The only containment penetrations in the NAC-LWT cask are the cask cavity vent and drain ports, and the cask lid.

4.1.2 Seals and Welds

4.1.2.1 Seals

The O-rings of the cask lid and valve port covers are the seals that affect containment for the radioactive contents of the NAC-LWT cask, as described in Section 4.1. Appendix 4.5.1 contains the military specification that prescribes the physical and chemical properties of the TFE O-rings. Appendix 4.5.2 is the manufacturer's technical bulletin for the metallic O-rings. Seal testing, prior to cask acceptance from the manufacturer, during routine maintenance, and upon assembly for transportation, includes the fabrication leakage rate test, the periodic maintenance leakage rate test, and the preshipment leakage rate test in accordance with the requirements of ANSI N14.5-1997. Appendix 4.5.3 contains a description of the leakage testing performed using the Viton® O-rings on the alternate port cover design at temperatures exceeding the

manufacturer's elevated temperature limit. Appendix 4.5.3 also contains the O-ring manufacturer's material report on the Viton® material. Appendix 4.5.9 contains the technical specification on the Alternate B port cover HELICOFLEX® metallic face seal.

4.1.2.1.1 Fabrication Leakage Rate Test

Upon completion of fabrication, the cask containment shall be tested as described in Section 8.1.3. There are two leakage rates defined for the NAC-LWT containment boundary: one for radioactive material contents that do not require a leaktight containment, and a second for radioactive material contents requiring a leaktight containment boundary – e.g., TPBARs, damaged TRIGA fuel in damaged fuel cans (DFCs), etc. The standard helium leakage rate test verifies the containment boundary integrity of the package, including the closure lid and alternate port covers, to a leakage rate of less than or equal to 5.5×10^{-7} cm^3/s (helium). The leaktight helium leakage rate test verifies the containment boundary integrity of the package, including cask lid and Alternate B port covers, to a leakage rate of less than or equal to 2×10^{-7} cm^3/s (helium). The leakage rate tests are further described in Chapter 8.

4.1.2.1.2 Fabrication Pressure Test

During acceptance testing, the cask containment boundary shall be hydrostatically tested using the pressure test described in Section 8.1.2. This test verifies the sealing integrity of the package with a hydrostatic test pressure of 209 psig for fissile material shipments.

As an additional post-fabrication test, prior to performing the first TPBAR shipment in an NAC-LWT cask, the hydrostatic test described in Section 8.1.2 shall be performed with the Alternate B port covers installed. The test pressure for the hydrostatic test shall be 450 psig, which is 150% MNOP.

4.1.2.1.3 Preshipment Leakage Rate Test

Prior to shipment of a loaded NAC-LWT cask, the containment seals of the closure lid and the vent and drain port covers shall be individually leakage tested. For the alternate port covers, a pressure drop test is performed by pressurizing the volume between the containment seal and the test seal. This preshipment leakage rate test assures that the port covers and seals are properly installed and that no leakage exists in excess of the minimum test sensitivity of 1×10^{-3} ref cm^3/s.

If the alternate port cover Viton® containment O-ring is replaced, a maintenance leakage rate test is required to be performed per Section 8.1.3.

The closure lid and the Alternate B port cover both utilize metallic O-rings for the containment boundary seal. Metallic O-rings are designed for a single use and must be replaced prior to each loaded transport, if the component is removed. Following installation of the closure lid and Alternate B port covers, maintenance leakage rate tests are performed on each component in accordance with the helium leak test procedures in Section 8.1.3.

4.1.2.2 Welds

All containment vessel welds are full penetration bevel or groove welds to ensure structural and containment integrity.

4.1.3 Closure

Closure of the containment vessel is provided by the twelve 1-8 UNC closure lid bolts, each tightened to 260 ft-lb of torque. The lid bolts are SA-453, Grade 660 high alloy steel bolting material. The lid bolts are preloaded so that the lid seals remain fully compressed for all load conditions. The structural adequacy of the lid bolts is documented in Sections 2.1.3.2.2, 2.6.7.6 and 2.10.9. The closure lid O-ring seals are specified on Drawing No 315-40-02 in Section 1.4. The O-ring seals and grooves are selected based on the manufacturer's specifications to satisfy the pressure and temperature conditions incurred by the NAC-LWT cask.

The leakage test described in Section 8.1.3 verifies that the lid seal leakage rate does not exceed 5.5×10^{-7} cm^3/s (helium) for packages that do not require a leaktight containment boundary. Packages requiring a leaktight containment boundary are tested per Section 8.1.3 to a lid seal leakage rate of less than or equal to 2×10^{-7} cm^3/s (helium).

Alternate port covers are retained by three ⅜ - 16 UNC bolts, each tightened to 100 ± 10 in-lb of torque. The bolt material for these port covers is SA-193, Grade B6 high alloy steel. The Alternate B port cover is retained by three ⅜ - 16 UNC bolts, made from SB-637 Grade N07718 nickel alloy steel, each tightened to 280 ± 15 in-lb of torque. The Alternate B port covers are required for the transport of damaged TRIGA fuel in DFCs, TPBAR contents and other contents that require a leaktight containment configuration.

4.2 Containment Requirements for Normal Conditions of Transport

The NAC-LWT cask must maintain a radioactivity release rate less than 10^{-6} A_2/hr under normal conditions of transport, as required by 10 CFR 71.51 and IAEA Transportation Safety Standards (TS-R-1). For any of the evaluated fuels, except for those requiring a leaktight containment, this condition is satisfied by maintaining a maximum allowable leak rate of 6.39×10^{-7} ref. cm^3/sec (air) at standard temperature and pressure conditions for normal conditions of transport as shown in Table 4.2-4. The equivalent maximum allowable helium leak rate is 1.06×10^{-6} std cm^3/sec (helium). To ensure that the maximum allowable leak rate is not exceeded, the cask is conservatively leak tested to 5.5×10^{-7} std cm^3/sec (helium). As shown in Table 4.3-2, the allowable leak rate for accident conditions is larger. For the transport of damaged TRIGA fuel in DFCs and TPBARs, a leaktight containment boundary is required. Leaktight is defined per ANSI N14.5-1997 to be 1×10^{-7} ref cm^3/s (2×10^{-7} std cm^3/s, helium).

The limiting transport contents for the containment analysis for non-TPBAR contents are 25 BWR high burnup fuel rods, assuming that 56%, or 14, of the fuel rods are classified as damaged. The analysis is based on the assumption that the fuel rods fail in transport, which is considered to bound the condition in which the fuel is already damaged. This is conservative since fuel classified as damaged is likely to have already lost initial charge and fission gases prior to loading in the transport cask. The calculated allowable leak rate for the 14 failed rod configuration is 1.06×10^{-6} std cm^3/s (helium). This value is greater than the helium leak test condition of 5.5×10^{-7} cm^3/s (helium). Therefore, transport of 25 high burnup PWR or BWR fuel rods, with up to 14 of the fuel rods classified as damaged, is acceptable.

The PULSTAR fuel element containment evaluations, compliant with a 10 CFR 71 B(U)F-96 designation as specified in the TS-R-1 compliance document, are presented in Section 4.5.8. Both intact and damaged fuel payloads are acceptable per the revised 10 CFR 71.63, as the plutonium produced in the PULSTAR fuel elements is in solid form.

The structural and thermal evaluations of the NAC-LWT are provided in Chapters 2 and 3, respectively. Results of these evaluations demonstrate that cask containment is maintained during normal conditions of transport and hypothetical accident conditions. Therefore, the package satisfies the containment requirements of 10 CFR 71.51

4.2.1 Containment of Radioactive Material

The 10 CFR 71 limit for the release of radioactive material under normal conditions of transport is 10^{-6} A_2/hr. The A_2 value for a mixture of isotopes is determined by using the method described in 10 CFR 71, Appendix A. The assumed release fractions for the cask contents, with

the exception of MTR and DIDO fuel assemblies, are obtained from NUREG/CR-6487 (Anderson) and are summarized in Table 4.2-1. The isotope curie contents for the cask design basis PWR and BWR fuel assemblies, 25 PWR or BWR high burnup rods, and TRIGA (standard and cluster rods) and MTR fuel elements and DIDO fuel assemblies are provided in Section 4.5.4. The allowable leak rate for standard intact TRIGA fuel bounds the leakage rate for intact cluster rods described in Table 1.2-1. The containment analyses for MTR and DIDO fuel are presented in Sections 4.1.1 and 4.5.7 and are performed in accordance with the methodology presented in "Bases for Containment Analysis for Transportation of Aluminum-Based Spent Nuclear Fuel," WSRC-TR-98-00317, October 1998. Spiral fuel and MOATA plate bundle ANSTO basket payloads are comprised of MTR/DIDO type fuel plates and rely on the bounding containment evaluations performed for the similar DIDO basket. Further discussions of the ANSTO basket payloads are included in Section 4.5.10.

The allowable leak rate for BWR fuel is primarily determined by the postulated concentration of ^{60}Co in crud that is assumed to coat the external surface of the fuel rods and channel of the BWR fuel assemblies. Crud is a mixture of impurities that are deposited on the exterior of the fuel assembly by reactor cooling water during power generation. NUREG/CR-6487 estimates the maximum ^{60}Co concentrations on spent fuel assemblies to be 140 $\mu Ci/cm^2$ for PWR assemblies and 1,254 $\mu Ci/cm^2$ for BWR assemblies at initial discharge. The calculated concentration, based on assembly surface area, is decayed 2 years based on the required cool time for design basis PWR and BWR fuel.

The combined payload isotopic content of the two General Atomics (GA) Irradiated Fuel Material (IFM) Fuel Handling Units (FHUs) is 3403 Ci, 86% of which is for the TRIGA elements in the RERTR/IFM FHU. Based on the FLIP-LEU II TRIGA element data in Table 4.5-7 through Table 4.5-9, the design basis activity inventory for a single TRIGA element is 2094 Ci. However, since up to 140 design basis elements can be loaded in the poisoned TRIGA basket, the cask inventory is 293,174 Ci. This bounds the 3403 Ci of the combined GA IFM payload (by a factor of more than 80). Thus, no containment evaluation is necessary for the NAC-LWT loaded with GA IFM.

4.2.1.1 Calculation of Permissible Leak Rates

The maximum permissible leak rate from the cask under normal conditions of transport is determined from the 10 CFR 71 limit of 10^{-6} A_2/hr:

$$R_N = L_N C_N \leq A_2 \times 10^{-6} \text{ hr}^{-1} \text{ or } 2.78 \times 10^{-10} \text{ sec}^{-1}$$

where:

L_N = allowable volumetric gas leakage rate [cm^3/s]

C_N = curies per unit volume (termed "activity density") of the radioactive material that passes through the leak path [Ci/cm^3]

R_N = Release rate for normal transport conditions [Ci/sec]

Activity Density of Radioactive Material (C_N)

The total inventory of fission product gases, volatiles, fines and crud for the design basis PWR and BWR spent fuel are shown in Table 4.5-1 through Table 4.5-6. The inventories are calculated using the source terms produced by the SAS2H sequence (Hermann) and applying the release fractions (Table 4.2-1) and the postulated ^{60}Co content of the crud. The ^{60}Co content is decayed 2 years from discharge to the design basis fuel cool time. The PWR crud analysis is based on a single design basis fuel assembly, while the BWR crud analysis is based on 2 design basis fuel assemblies. The total inventories for metallic fuels are calculated in the same way, conservatively applying the release fractions for PWR and BWR spent fuel. Crud does not contribute to the source term for metallic fuels, as crud formation is not considered to be a significant contaminant for MTR, research reactor, and other metallic fuels. The radionuclide inventory of the bounding TRIGA fuel element, the FLIP LEU with type II end fittings, is shown in Table 4.5-7 through Table 4.5-9, for gases, volatiles and fines, respectively. The radionuclide inventory of the TRIGA fuel cluster rods is bounded by that of the design basis TRIGA fuel element. The radionuclide inventory of the bounding MTR fuel element is similarly shown in Table 4.5-10 through Table 4.5-12. The radionuclide inventory of the bounding DIDO fuel assembly is shown in Table 4.5-19 through Table 4.5-21. As indicated by the bounding source described in Chapter 5 and further discussed in Section 4.5.10, the spiral fuel assemblies and MOATA plate bundles in the ANSTO basket are bounded by DIDO evaluations.

As shown in Table 4.2-2, the allowable leak rate for TRIGA fuel characterized as failed bounds the allowable leak rate of the design basis PWR and BWR fuel, the intact high burnup 25 PWR or BWR rod configuration, and other MTR, research reactor, and the other metallic fuels considered. However, the 56% failed, high burnup 25 PWR or BWR fuel rod configuration allowable release rates are the most restrictive, as shown in Section 4.5.6.

The total activity density for the contents of the cask, C_N, is:

$$C_N = C_{Crud} + C_{Volaties} + C_{Fission\ Gas} + C_{Fines}$$

The activity density for crud is:

$$C_{Crud} = \frac{f_C M_T}{V} = \frac{f_C S_C N_A (N_R S_{AR} + S_{Ch})}{V}$$

where:

C_{crud} = activity density inside containment vessel resulting from crud spallation [Ci/cm^3]

M_T = total crud activity inventory [Ci]

f_C = crud spallation factor

V = free volume inside containment vessel [cm^3]

S_C = crud surface activity [Ci/cm^2]

N_R = number of fuel rods per assembly

N_A = number of assemblies

S_{AR} = surface area per rod [cm^2]

S_{Ch} = channel surface area [cm^2] (BWR fuel only).

The activity density for fuel fines (particulates) is:

$$C_{fines} = \frac{f_F W_R A_R N_R N_A f_B}{V}$$

where:

C_{fines} = activity concentration inside containment vessel resulting from fines released from cladding breaches [Ci/cm^3]

f_F = fraction of fuel rod's mass released as fines resulting from cladding breach

f_B = fraction of fuel rods that develop cladding breach

W_R = mass of the fuel in fuel rod [g]

N_R = number of fuel rods per assembly

N_A = number of assemblies

A_R = specific activity of fines emitted from cladding breach in fuel rod [Ci/g]

V = containment vessel void volume [cm^3].

The activity density for isotopes characterized as volatile and gaseous is:

$$C_{vol\&gas} = C_{vol} + C_{gas} = \frac{N_R N_A f_B W_R (A_V f_V + A_G f_G)}{V}$$

where:

$C_{vol\&gas}$ = releasable activity concentration inside the containment vessel resulting from gases and volatiles released from cladding breaches [Ci/cm^3]

C_{vol} = releasable activity concentration inside the containment vessel resulting from volatiles released from cladding breaches [Ci/cm^3]

C_{gas} = releasable activity concentration inside the containment vessel resulting from gases released from cladding breaches [Ci/cm^3]

W_R = mass of the fuel in a fuel rod [g]

N_R = number fuel rods per assembly

N_A = number of assemblies

f_B = fraction of rods that develop cladding breaches

A_V = specific activity of volatiles in fuel rod [Ci/g]

f_V = fraction of volatiles in fuel rod released if rod develops cladding breach

A_G = specific activity of gas in fuel rod [Ci/g]

f_G = fraction of gas that would escape from fuel rod that develops cladding breach

V = is the void volume inside containment vessel [cm^3].

Activity Values for Radionuclides

A_2 values for the design basis PWR and BWR fuel crud, gases and volatiles, and fuel fines are shown in Section 4.5.4, and summarized in Table 4.5-1 through Table 4.5-6. For those isotopes for which no specific A_2 value is specified, the generic values listed in 10 CFR 71, Table A.2, are applied. The A_2 value for mixtures of isotopes is calculated from:

$$A_2 = \frac{1}{\sum \frac{F_i}{A_2^i}}$$

where:

$$F_i = \frac{S_i}{S_n}$$

F_i = The fraction of isotope i with respect to the entire mixture

S_i = The activity isotope i (Curies)

S_n = The total group activity (Curies)

A mixture A_2 value is determined for gases, volatiles, fines, and crud. These A_2 values are then combined, using the same formula, to obtain a total cask mixture A_2 value. Based on the releasable curie content and the cask contents A_2 value, the allowable leak rate for the various spent fuel contents are summarized in Table 4.2-2.

Maximum Allowable Leak Rates

Using the methodology described above, the bounding maximum allowable leak rate for all of the NAC-LWT cask contents is calculated to be 1.32×10^{-6} cm^3/sec. This leak rate analysis is

based on the conservative assumption that 56% of the 25 high burnup fuel rods, or 14 fuel rods, fail in transport.

The results of the leak rate analysis of the high burnup fuel rods and the other NAC-LWT fuel contents are shown in Table 4.2-2. The allowable release rate for HEU MTR fuel is specified as it bounds the allowable release rate for MEU and LEU MTR fuel. Similarly, the allowable release rate for LEU DIDO fuel is specified, since it bounds the allowable release rate for HEU and MEU DIDO fuel. The evaluations of MTR and DIDO fuel are presented in Sections 4.1.1 and 4.5.7, respectively. Based on these results, a helium leak test value of 5.5×10^{-7} cm^3/sec is used to demonstrate containment of the NAC-LWT spent fuel contents. As shown in Table 4.2-4, this test leak rate is conservative with respect to the calculated maximum allowable leak rate for the cask contents. A leaktight containment boundary is required for the transport of TPBAR contents.

The allowable release rate of the TRIGA fuel is more restrictive than for the design basis PWR or BWR assemblies because of the application of the postulated release fractions for light water reactor fuel to the metallic TRIGA fuel. This application is highly conservative as the metallic fuel is less subject to the release of volatile isotopes and fuel fines due to fabrication methods employed in making the fuel. Based on a report by General Atomics for Lockheed Martin Idaho Technologies Company, "Uranium-Zirconium Hydride Fuels for TRIGA Reactors," (UZR-28, June 1997) fission gas release from an unclad TRIGA element is less than 0.01% at a temperature of 400°C. The maximum accident temperature for the TRIGA cask is conservatively assumed to be 756°F (402°C) with air in the cask. The maximum calculated accident average cavity gas temperature is 574°F (301°C) as shown in Section 3.5.3.2. A conservative release fraction of 1% is employed in the containment evaluation. A 1% release represents the release fraction of the fuel at 800°C.

For certain content conditions, including damaged TRIGA fuel in sealed DFCs and TPBARs, a leaktight containment boundary configuration is required. For this containment configuration, Alternate B port covers with metallic containment seals are installed. Each of the containment penetrations (i.e., closure lid and the vent and drain Alternate B port covers) is individually leakage tested to leaktight acceptance criteria prior to transport.

4.2.1.2 Correlation of Permissible Leak Rates to Air Standard

The maximum allowable release must be correlated to air standard leak rates, which depend on gas temperatures, pressures, and leak path. This correlation requires calculation of the capillary opening diameter through which the flow occurs. Depending on pressure and condition of the flow, two flow regimes are evaluated: continuum and molecular flow. Continuum flow and molecular flow equations are obtained from NUREG/CR-6487, Section 2. Continuum and

molecular flow can occur simultaneously and are so treated in this analysis. Both continuum and molecular flow rate equations presented below are adjusted to upstream flow rate.

The continuum volumetric flow rate of the gas (cm^3/sec), L_c, is given by:

$$L_c = \frac{2.48x10^6 D^4}{am}(P_u - P_d)\frac{P_a}{P_u} = F_c(P_u - P_d)\frac{P_a}{P_u}$$

where:

L_c = continuum flow rate of gas at P_u [cm^3/sec]
F_c = coefficient for continuum flow [cm^3/atm-s]
D = capillary diameter [cm]
A = capillary length [cm]
μ = fluid viscosity [cP]
P_u = upstream pressure [atm] - pressure inside containment
P_d = downstream pressure [atm] - pressure outside containment

The molecular volumetric flow rate of the gas (cm^3/sec), L_m, is given by:

$$L_m = \frac{3.81x10^3 D^3\sqrt{\frac{T}{M}}}{aP_a}(P_u - P_d)\frac{P_a}{P_u} = F_m(P_u - P_d)\frac{P_a}{P_u}$$

where:

L_m = molecular volumetric flow rate of gas at P_u [cm^3/sec]
F_m = coefficient for molecular flow [cm^3/atm-s]
D = capillary diameter [cm]
T = gas temperature [K]
M = gas molecular weight [g/mole]
P_a = average pressure (P_u+P_d)/2 [atm]
P_u = upstream pressure [atm]
P_d = downstream pressure [atm]
A = capillary diameter [cm]

For this analysis, the gas temperature used for molecular flow analysis is identical to the upstream temperature.

Based on the maximum allowable leakage rate, the flow rate equations are solved for the capillary diameter. Air standard (reference) properties for air are then substituted into the flow equations to arrive at the air standard leakage rate (L_R) and leak test sensitivity. Standard conditions represent leakage at 298K, flowing from an upstream pressure of 1 atmosphere, to a downstream pressure of 0.01 atmospheres. To complete the analysis, helium leak rates are calculated for the NAC-LWT limiting contents at standard conditions.

The cask pressure, P_u, is determined based on the pressure conditions for the design basis PWR fuel as described in Section 4.2.2. This pressure is conservative because the metallic fuel, including MTR, TRIGA and DIDO fuel, does not contain an initial charge of helium gas. The temperature applied is that for the type of fuel considered in the leak rate evaluation as shown in Table 4.2-3.

4.2.2 Pressurization of Containment Vessel

The maximum pressure in the cask during normal conditions of transport for the fissile material payloads is calculated by using the methodology presented in Section 3.4.4. Assumptions underlying this calculation are that during normal conditions of transport, 3% of the fuel rods may fail and that 30% of the fission gases in the rods are releasable. In addition, for LWR high burnup rods, 56% of the rods with oxide layers greater than 70 micrometers (14 rods) are assume to fail during transport. This is conservative since fuel rods classified as damaged may have released fission and charge gases prior to transport. Failed rods are assumed to have released the fission gas prior to transport. The cask cavity is backfilled to 1 atm with 99.9% pure helium gas.

The gas volume (e.g., plenum and pellet to cladding gap) inside the fuel rods is conservatively neglected when calculating the cask free volume. The maximum normal conditions cavity pressure for the PWR fuel configuration is 1.99 atm. This pressure is conservatively applied to all the fuels (except in the 25 PWR/BWR high burnup fuel rod analysis) to establish the allowable leak rate. The pressure is conservative since the metallic fuels contain no initial charge of helium gas and release a lower percentage of fission product gases. The maximum normal condition cavity pressure used for the 25 intact PWR/BWR high burnup fuel rod analysis is 2.1 atm. For the 25 BWR/PWR rod analysis with 56% fuel rod failure, the maximum normal condition cavity pressure is 3.2 atm for the BWR analysis, and 3.0 atm for the PWR analysis, respectively.

Normal condition system maximum normal operating pressure (MNOP) for the transport of up to 300 production TPBARs (including up to 2 prefailed rods) is conservatively determined in Section 3.4.4.5 as 289 psig. The TPBAR normal condition pressure assumed clad failure of all

300 TPBARs during transport. The pressure for the second TPBAR content condition of 55 segmented TPBARs contained in a waste container is bounded by the 300 TPBAR MNOP.

4.2.3 Containment Criteria

The standard leak rate provided in Table 4.2-4 for fissile material shipments represents the maximum leak rate allowed if the seals were to be tested with air at an upstream pressure of 1 atm and a downstream pressure of 0.01 atm at a temperature of 25°C. This is the maximum allowable leak rate for the containment system fabrication verification and periodic verification leak tests described in Section 4.1, and in Chapter 8.

As specified in Section 4.1.2, the containment boundary for contents not requiring a leaktight containment is leak tested to 5.5×10^{-7} std cm^3/s (helium). The sensitivity for these tests is required by ANSI N14.5-1997 to be one-half the test leak rate, or 2.75×10^{-7} std cm^3/s (helium).

The leakage rate for contents requiring a leaktight containment (e.g., TRIGA fuel in sealed DFCs, TPBARS, etc.) per ANSI N14.5-1997 is 1×10^{-7} ref cm^3/s, which is equivalent to a helium leak rate of less than or equal to 2×10^{-7} std cm^3/s. The minimum test sensitivity is 1×10^{-7} cm^3/s (helium).

Table 4.2-1 Release Fractions: Normal and Accident Conditions

Radionuclide Origin	Fraction: Normal Conditions	Fraction: Accident Conditions
Fuel Assumed to Fail	0.03[1]	1.0
Fission Gas Released[2,3]	0.3	0.3
Volatiles Released[3]	0.0002	0.0002
Fuel Mass Released as Fines[3]	0.00003	0.00003
Crud Spallation[4]	0.15	1.0

[1] 56% for > 70 micrometer oxide layer rod shipment.

[2] The release fraction from TRIGA and NRX fuel is taken as 0.01.

[3] Baseline TRIGA fuel element and cluster rod evaluations rely on a 1×10^{-2} release fraction for fission gas, a 2×10^{-4} fraction for volatiles and a 3×10^{-5} fraction for fines. Fission gas release is based on bounding data for unclad (conservative) U-ZrH fuel at temperatures up to 800°C (above normal operating temperature for TRIGA cores and well above cask operating temperatures) [Uranium-Zirconium Hydride Fuels for TRIGA Reactors, General Atomics Report UZR-28, 1997]. Volatile and fine release fractions from the preshipment intact fuel are based on standard uranium oxide (UO_2) LWR fuel values, as no specific information on TRIGA fuels is available. The volatile release fraction of UO_2 fuel is considered to be applicable to TRIGA fuel, as the fuel lattice traps fission gases better than UO_2 fuel pellets (release rates up to 30% are evaluated) and is expected to perform better than UO_2 fuel for the solid volatiles (at TRIGA operating temperatures). Conversion of the U-Zr metal alloy to U-ZrH fuel material results in a more brittle material than the U-Zr alloy. Studies summarized at INEL [Report MAE-03-94 from M.A. Ebner, July 1994, "Stability of Uranium-Zirconium Hydride Spent Fuel in Wet Storage"] indicate that even under adverse environmental conditions, the U-ZrH fuel matrix remains stable with no significant fuel material loss, demonstrating that the performance of the fuel in the retention of fines should exceed that of the post-irradiation extremely brittle UO_2 pellets. To bound any uncertainties in the volatile and fission gas release fractions (for intact fuel failing during transport conditions), a secondary set of analysis is performed on the cluster rods. The secondary analysis uses a release fraction of 1×10^{-2} for volatiles and 1×10^{-3} for fines (two orders of magnitude higher than the UO_2 fractions). The increased release fraction evaluations are only performed for the cluster rods, as the baseline evaluations have shown similar results for TRIGA and TRIGA cluster rods.

[4] Applied only to BWR and PWR spent fuel.

Table 4.2-2 Allowable Release Rates for NAC-LWT Cask Contents: Normal Conditions

Fuel Type	Crud (Ci)	Gas (Ci)	Volatiles (Ci)	Fines (Ci)	Total (Ci)	A_2 (Ci)	L_N (cm^3/sec)
WE 15×15	4.397	36.144	1.173	0.400	42.114	36.603	3.56E-05
GE 7×7	42.808	24.611	0.827	0.275	68.521	15.525	6.41E-06
Metallic (NRX - 15 Intact Rods)	---	0.103	0.106	0.095	0.304	2.793	2.60E-04
Metallic (NRX -9 Failed Rods)	---	2.059	2.129	1.894	6.082	2.793	1.30E-05
25 PWR Rods	0.602	7.930	0.456	0.242	9.231	12.295	5.45E-05
MTR[1]	0.019	108.851	0.012	1.829	110.711	24.745	1.42E-05
DIDO[2]	0.011	53.613	0.005	8.161	61.789	7.996	1.32E-05
TRIGA[3]	---	1.011	0.697	0.156	1.864	6.161	1.58E-04
TRIGA Cluster[3]	---	1.480	0.815	0.165	2.454	8.139	1.58E-04
TRIGA Cluster[4]	---	1.480	40.74	5.471	47.69	4.294	4.30E-06
25 PWR Rods – 56% Failed	0.773	194.727	37.154	23.708	256.362	17.473	1.83E-06
25 BWR Rods – 56% Failed	9.236	293.314	44.234	26.349	373.133	19.828	1.32E-06

[1] As evaluated in Section 4.5.5, the listed values are for HEU MTR elements, which bound the LEU and MEU MTR fuel elements.

[2] As evaluated in Section 4.5.7, the listed values are for LEU DIDO assemblies, which bound the MEU and HEU DIDO fuel assemblies.

[3] Based on intact fuel load and baseline release fractions. Damaged fuel to be loaded into a leaktight containment configuration.

[4] Based on intact fuel load and increased release fractions (1×10^{-2} volatiles and 1×10^{-3} fines).

Table 4.2-3 Cask Free Volumes and Pressures

	Pressure (atm)		Temperature	Free Volume
Fuel Type	Normal	Accident	(K)	(10^5 cm^3)
PWR	1.99[1]	11.4[1]	517.4	1.471
BWR	1.99[2]	11.4[2]	517.4	1.018
Metallic Fuel	1.99[2]	11.4[2]	405.2	1.018
MTR	1.99[2]	11.4[2]	470.2	2.293
DIDO	1.99[2]	11.4[3]	433.2	3.681
TRIGA[7]	1.99[2]	11.4[2]	571.4[2]	1.717
GA IFM	N/A[6]	N/A[6]	403.2	3.354
25 PWR Rods – 56% Failed Fuel Fraction	3.0	4.3[5]	588.7[4]	0.9681
25 BWR Rods – 56% Failed Fuel Fraction	3.2	4.5[5]	588.7[4]	0.8932

[1] Based on Sections 3.4.4 and 3.5.4, the maximum calculated pressures for the PWR payload are 1.93 atm (28.3 psia) normal condition and 8.56 atm (125.8 psia) accident conditions. The higher pressures used in the analyses are conservative since a higher pressure will result in a smaller leak diameter and reduced leak test requirements.

[2] The maximum pressure for the PWR fuel is conservatively applied.

[3] The temperature employed is approximately 4K lower than the maximum fuel clad temperature calculated. The fuel clad temperature is significantly higher than the average gas temperature in the cask. By combining the listed temperature with the cask maximum pressure (PWR fuel) conservative leak rates are calculated.

[4] The normal condition temperature is conservatively applied to the 25 PWR and BWR high burnup rod analysis.

[5] These pressures result from the 100% fuel rod failure plus the design basis fire accident.

[6] Based on the lower temperature and larger free volume of the GA IFM, as compared to the other contents, the pressure, although not explicitly calculated, is lower than that calculated for PWR and BWR fuel.

[7] TRIGA volume and pressure conservatively applied to TRIGA cluster rod analysis. Free volume is higher in the cluster rod configuration.

Table 4.2-4 Leak Rate and Leak Test Sensitivity - Normal Conditions

Fuel Type[1]	Assembly Type	Volumetric Activity (Ci/cm^3)	Leak Rate (cm^3/ sec)			
			Allowable (L_N)	Allowable (air) (L_R)	Allowable (helium)	Test (helium)[2]
BWR	GE 7×7	6.73E-04	6.41E-06	5.35E-06	7.66E-06	5.50E-07
TRIGA[3]	FLIP-LEU II	1.08E-05	1.58E-04	1.52E-04	1.79E-04	5.50E-07
TRIGA Cluster[4]	LEU	1.43E-05	1.58E-04	1.52E-04	1.79E-04	5.50E-07
TRIGA Cluster[5]	LEU	2.77E-04	4.30E-06	3.59E-06	5.28E-06	5.50E-07
MTR	HEU	4.83E-04	1.42E-05	1.19E-05	1.62E-05	5.50E-07
DIDO	LEU	1.68E-04	1.32E-05	1.46E-05	4.54E-06	5.50E-07
25 BWR Rods – 56% Failed Fuel Fraction	Exxon 7×7	4.18E-03	1.32E-06	6.39E-07	1.06E-06	5.50E-07

[1] The bounding TRIGA fuel element is the FLIP-LEU II.
[2] Containment Verification Leak Test. Test Sensitivity is 2.75E-07 std. cm^3/s (helium).
[3] Based on loading of intact fuel rods. Damaged fuel is shipped in a leaktight configuration.
[4] Based on intact fuel load and baseline release fractions.
[5] Based on intact fuel load and increased release fractions.

4.3 Containment Requirements for Hypothetical Accident Conditions

The 10 CFR 71 requirement for the release of radioactive material under hypothetical accident conditions is met by ensuring that the requirement is met for the bounding fissile material contents, 140 TRIGA fuel elements, 56 of which are characterized as failed. Calculation of the allowable release rate is provided in Section 4.3.2.

The structural integrity of the cask containment during hypothetical accident conditions is demonstrated in Section 2.7. Therefore, the cask containment is maintained under hypothetical accident conditions.

As shown in Table 4.3-2, the allowable release rate in the hypothetical accident condition is significantly larger than that for normal conditions of transport. Consequently, the bounding allowable leak rate is that for the failed TRIGA fuel as calculated in Section 4.2-1.

The containment boundary for the transport of contents requiring a leaktight containment (e.g., damaged TRIGA fuel in sealed DFCs, TPBARS, etc.) is demonstrated by leakage testing to a leakage rate of less than or equal to 1×10^{-7} ref cm^3/s. Per ANSI N14.5-1997, the equivalent helium leakage rate for leaktight conditions is less than or equal to 2×10^{-7} cm^3/s.

PULSTAR fuel element specific analyses are compliant with B(U)F-96 requirements as documented in Section 4.5.8.

4.3.1 Fission Gas Products

The accident conditions for maximum fission gas release assumes 100% rod failure and also assume that 30% of the tritium and 30% of the ^{85}Kr are available for release to the cask cavity. In addition, 100% of the ^{60}Co in the crud on the design basis PWR and BWR fuel assemblies is conservatively assumed to be available for release as an aerosol. Due to the crud contamination of the BWR assembly, its allowable leak rate bounds that of the PWR fuel. The metallic fuels do not contain significant amounts of fission gas that are available for immediate release and do not have significant levels of crud. TRIGA fuel elements are assumed to release 1% of their fission gas products under accident conditions.

4.3.2 Containment of Radioactive Materials

The NAC-LWT cask is designed to maintain a release rate of less than 1 A_2/week for the hypothetical accident conditions, as required by 10 CFR 71.51. The A_2 for the mixed radionuclides considered to be available for release is determined by using the method described in 10 CFR 71, Appendix A. The release fractions for the various radionuclides found in the cask

are obtained from NUREG/CR-6487 and are summarized in Table 4.2-1. The A_2 per week limit is not exceeded for any NAC-LWT contents, based on the leak test described in Section 4.1.3.

4.3.2.1 Calculation of Allowable Leak Rates

The allowable leak rates under hypothetical accident conditions are calculated by using the method described in Section 4.2.1.1 for normal conditions of transport. The total inventory of fission product gases, volatiles, fines, and crud are calculated by using the source terms generated by SAS2H. The assumed release fractions are shown in Table 4.2-1. Using the A_2 values from 10 CFR 71, Appendix A, the mixture A_2 values are determined for gas, volatile, fine, and crud mixtures for the bounding accident condition fuel contents (WE 15 × 15 PWR) as shown in Table 4.3-1. For the 25 PWR and BWR high burnup rod analysis, A_2 values were also determined and are reported in Table 4.3-3 (PWR) and Table 4.3-4 (BWR). The maximum allowable release rates are calculated by using the hypothetical accident condition allowable release limit:

$$R_A = L_A C_A \leq A_2 \times \text{week}^{-1} = A_2 \times 1.65 \times 10^{-6} \text{sec}^{-1}$$

where:

L_A = volumetric gas leak rate [cm^3/s]

C_A = curies per unit volume (termed "activity density") of the radioactive material that passes through the leak path [Ci/cm^3]

R_A = release rate for accident transport conditions

Assumptions underlying the calculations for the hypothetical accident conditions are that 100% of the fuel cladding fails and 100% of the crud is released. The mixture A_2 value for the hypothetical accident conditions is calculated using the methodology of Section 4.2.1.1, applying the accident condition release fractions of Table 4.2-1.

The calculated maximum allowable hypothetical accident condition leak rate for the design basis PWR and BWR spent fuel, and for metallic fuel rods and TRIGA fuel characterized as failed, are tabulated in Table 4.3-2. The calculated maximum allowable hypothetical accident condition leak rate for the 25 PWR and BWR high burnup rod analysis is also reported in Table 4.3-2.

4.3.2.2 Correlation of Allowable Leak Rates to Standard Leak Rates

The maximum allowable leak rates for the hypothetical accident conditions are corrected to standard leakage rates using the methodology described in Section 4.2.1.2. The results are tabulated in Table 4.3-2 for the design basis PWR and BWR spent fuel, MTR HEU elements,

DIDO LEU assemblies and 140 TRIGA fuel elements, with 56 elements characterized as failed prior to loading in the cask.

4.3.2.3 Containment Criteria

For fissile material payloads evaluated, the allowable leak rates for the hypothetical accident conditions are much greater than those for the normal conditions of transport calculated in Section 4.2.1. Because the cask containment is demonstrated to be maintained under hypothetical accident conditions (Section 2.7.0), the maximum permissible leak rates for normal conditions of transport are more limiting and are, therefore, used for the establishment of the maximum allowable leak rates for the containment system fabrication and periodic verification leak tests. For damaged TRIGA fuel in sealed DFCs and TPBAR contents, a leaktight containment boundary is maintained during transport.

4.3.2.4 Tritium Permeation Rate of Seals for TPBAR Shipment

The release of tritium into the cask cavity from all 300 rods, 298 rods that are event-failed and 2 rods defined to be prefailed, has the potential of releasing a significant quantity of tritium (> $1A_2$) into the cask cavity. As shown in the structural analysis, the lid and port cover seals retain their ability to provide cask closure during all accident conditions. To assure that the accident release limit of $1A_2$/week is not exceeded under accident conditions the port and lid seal permeation rates are evaluated.

The formula for permeation through metal is:

$$PR = \Phi \times A / l \times \left(P_p\right)^{1/2}$$

where:

PR = equilibrium (steady-state) permeation rate in std cc (permeate) per sec
Φ = permeability in std cc (permeate) per second per material surface area per permeate partial pressure ½ through a unit material thickness
A = material surface area that is "exposed" to the permeate
l = material thickness through which the permeate "passes"
P_p = upstream permeate partial pressure

The formula for permeability is:

$$\Phi = \Phi_0 \times \exp\left(-\frac{E_\Phi}{RT}\right)$$

where:

Φ = permeability as stated previously

Φ_0 = pre-exponential permeation factor in the same units as Φ

E_Φ/R = the activation energy of the permeation process, which has been 'normalized' by the universal gas constant

T = absolute temperature of the metal (K).

Combining the permeation equations with an activity density of 0.16 Ci/cc, resulting from the release of 55 Ci per event failed rod and 0.199 moles of tritiated water for each prefailed rods, and

T = 572K – Maximum accident temperature for the seals per Table 3.5-1

Φ_0 = 7.42×10^{-2} [LLNL Report UCRL-53441] (stainless steel port seal), 2.10×10^{-2} [Fusion Science and Technology] (inconel lid seal)

E_Φ/R = 7,700 (stainless steel port seal), 7490 [Fusion Science and Technology] (inconel lid seal)

l = 0.012 inch for the port cover seal (only considering the stainless steel portion of the seal) and 0.032 inch for the lid seal

P_p = 0.15 atm – tritium partial pressure in the cask cavity based on the cask free volume, accident condition temperature, and a release of 55 Ci of tritium per event failed rod (conservative modeled as isotope not molecular tritium) and 0.199 moles of tritiated water from the prefailed rods)

yields an approximate release through seal permeation of 5 Ci/week compared to the allowable accident release rate of 1.1×10^3 Ci/week ($1A_2$/week based on an A_2 value for tritium of 1.1×10^3 Ci).

Actual permeation release rates would be significantly lower as the accident temperatures are short term, with elevated temperatures at the seal locations returning to normal condition temperatures within an hour of the fire.

Similar calculations are performed for the 55 equivalent TPBARs, in segments and debris, which may release up to 100% of the tritium contained in the pellets during transport. The pellet tritium content represents approximately 40% of the tritium quantity in the TPBAR. At NAC-LWT normal and accident conditions temperatures, the TPBAR components release tritium primarily as tritiated water with only a small fraction (maximum 2%) as gaseous tritium (see Appendix 1-B of Chapter 1). Gaseous tritium represents the basis for the seal permeation evaluation. During a one-year transport, an additional maximum 1% of the tritiated water may undergo radiolysis and dissociate. Conservatively applying a maximum 3% release rate to the 55 equivalent TPBAR total inventory of 66 grams (1.2 grams per rod) yields an inventory of 0.33 moles T_2. Seal permeation rates based on the conservative temperatures discussed in the previous paragraphs

and a 3% tritium gas release are 6.5×10^{-6} Ci/hr, normal conditions, and 1.06 Ci/week, accident conditions. A gaseous release of over 90% of the 1.2 grams per rod tritium inventory is required to exceed normal condition allowables at the conservative seal temperature of 222°F. A 100% gaseous release and resulting tritium permeation through the cask seals meets accident condition limits. Reducing seal temperatures less than 5°F, to account for a significantly lower decay heat payload (0.127 kW for the waste container TPBARs versus 1.05 kW on which the 222°F temperature is based), permits a normal condition release of 100% of the tritium in gaseous form while meeting the 10-6 A2/hr allowable.

4.3.3 Tritium Contamination Issues

Precautions will be taken to minimize the risk of excessive contamination of NAC-LWT casks during the loading and unloading of TPBAR contents to ensure the reusability of the NAC-LWT casks for transport of non-TPBAR contents. In addition to ensuring the safe handling of TPBAR contents, additional cavity gas and internal and external removable contamination surveys for tritium contamination will be implemented at all TPBAR loading and unloading facilities. The specific monitoring methods and levels of contamination to which the cask surfaces must be decontaminated are defined in the TPBAR loading and unloading procedures in Chapter 7. In addition, the TPBAR procedures also include precautions for users to observe when loading, unloading and handling TPBARs.

The procedures and precautions comply with the recommended practices of NUREG-1609, Supplement 2. The results of previous loading and unloading experiences regarding the measurement of tritium gas and contamination levels are provided in the PNNL letter in Section 1.5, Appendix 1-G of this SAR.

NAC-LWT cask units used for TPBAR transports shall comply with the specified contamination levels, or other non-TPBAR users will be advised to incorporate tritium monitoring requirements into their survey procedures and radiological control program.

Table 4.3-1 A_2 Calculation for PWR Spent Fuel

	Crud	Gas	Volatiles	Fines	Total
Total Activity per Assembly (Ci)	2.931E+01	4.016E+03	1.955E+05	4.446E+05	6.441E+05
Releasable Activity per Cask (Ci)	2.931E+01	1.205E+03	3.910E+01	1.334E+01	1.287E+03
Cask Volumetric Activity (Ci/cm^3)	1.992E-04	8.188E-03	2.658E-04	9.065E-05	8.744E-03
A_2 Value (Ci)	11.00000	281.42094	8.72766	0.81991	3.020E+02
Fraction of Activity	0.02278	0.93646	0.03039	0.01037	---
Fraction of Activity / A_2 (1/Ci)	0.00207	0.00333	0.00348	0.01264	0.02152
Mixture A_2 Value (Ci)					46.458

Table 4.3-2 Standard Leak Rates for Accident Conditions

Fuel Type	Assembly Type	Volumetric Activity (Ci/cm^3)	L_A Allowable Leak Rate (cm^3/ sec)
BWR	GE 7×7	1.12E-02	3.88E-03
PWR	WE 15×15	8.74E-03	8.77E-03
MTR	HEU	1.64E-02	1.35E-03
DIDO	LEU	6.33E-03	1.20E-03
TRIGA	FLIP-LEU II	3.62E-04	2.81E-02
TRIGA Cluster Rods (Baseline Release)	LEU	4.77E-04	2.81E-02
TRIGA Cluster Rods (Increased Release)	LEU	9.26E-03	7.65E-04
25 High Burnup PWR Rods	CE 14×14[1]	4.77E-03	6.02E-03
25 High Burnup BWR Rods	Exxon 7×7[1]	7.97E-03	3.91E-03

[1] Based upon these assemblies, but the active fuel lengths and rod lengths are extended to 150 inches.

Table 4.3-3 A_2 Calculation for 25 High Burnup PWR Spent Fuel Rods

	Crud	Gas	Volatiles	Fines	Total
Total Activity per Assembly (Ci)	5.150E+00	1.159E+03	3.317E+05	1.411E+06	1.744E+06
Releasable Activity per Cask (Ci)	5.150E+00	3.477E+02	6.635E+01	4.234E+01	4.616E+02
Cask Volumetric Activity (Ci/cm^3)	5.320E-05	3.592E-03	6.853E-04	4.373E-04	4.768E-03
A_2 Value (Ci)	11.00000	283.63841	13.58800	2.12043	3.103E+02
Fraction of Activity	0.01116	0.75337	0.14374	0.09172	1.000
Fraction of Activity / A_2 (1/Ci)	0.00101	0.00266	0.01058	0.04326	0.05751
Mixture A_2 Value (Ci)					17.389

Table 4.3-4 A_2 Calculation for 25 High Burnup BWR Spent Fuel Rods

	Crud	Gas	Volatiles	Fines	Total
Total Activity per Assembly (Ci)	6.157E+01	1.746E+03	3.949E+05	1.568E+06	1.965E+06
Releasable Activity per Cask (Ci)	6.157E+01	5.238E+02	7.899E+01	4.705E+01	7.114E+02
Cask Volumetric Activity (Ci/cm^3)	6.894E-04	5.864E-03	8.844E-04	5.268E-04	7.965E-03
A_2 Value (Ci)	11.00000	283.89694	13.28843	1.93498	3.101E+02
Fraction of Activity	0.08655	0.73627	0.11104	0.06614	---
Fraction of Activity / A_2 (1/Ci)	0.00787	0.00259	0.00836	0.03418	0.05300
Mixture A_2 Value (Ci)					

Chapter 6

Table of Contents

6 CRITICALITY EVALUATION 6-1
6.1 Discussion and Results 6.1-1
6.2 Package Fuel Loading 6.2-1
6.2.1 PWR Fuel Assemblies 6.2.1-1
6.2.2 BWR Fuel Assemblies 6.2.2-1
6.2.3 MTR Fuel Elements 6.2.3-1
6.2.4 PWR and BWR Rods in a Rod Holder or Fuel Assembly Lattice 6.2.4-1
6.2.5 TRIGA Fuel Elements 6.2.5-1
6.2.6 TRIGA Fuel Cluster Rods 6.2.6-1
6.2.7 Metallic Fuel Rods 6.2.7-1
6.2.8 DIDO Fuel Assemblies 6.2.8-1
6.2.9 General Atomics Irradiated Fuel Material 6.2.9-1
6.2.10 PULSTAR Fuel Elements 6.2.10-1
6.2.11 Spiral Fuel Assemblies 6.2.11-1
6.2.12 MOATA Plate Bundles 6.2.12-1
6.3 Criticality Model Specifications 6.2.12-1
6.3.1 PWR Fuel Assemblies 6.3.1-1
6.3.2 BWR Fuel Assemblies 6.3.2-1
6.3.3 MTR Fuel Elements 6.3.3-1
6.3.4 PWR and BWR Rods in a Rod Holder or Fuel Assembly Lattice 6.3.4-1
6.3.5 TRIGA Fuel Elements and Cluster Rods 6.3.5-1
6.3.6 DIDO Fuel Assemblies 6.3.6-1
6.3.7 General Atomics Irradiated Fuel Material 6.3.7-1
6.3.8 PULSTAR Fuel Contents 6.3.8-1
6.3.9 ANSTO Basket Payload 6.3.9-1
6.4 Criticality Calculations 6.3.9-1
6.4.1 PWR Fuel Assemblies 6.4.1-1
6.4.2 BWR Fuel Assemblies 6.4.2-1
6.4.3 MTR Fuel Elements 6.4.3-1
6.4.4 PWR and BWR Rods in a Rod Holder or Fuel Assembly Lattice 6.4.4-1
6.4.5 TRIGA Fuel Elements 6.4.5-1
6.4.6 TRIGA Fuel Cluster Rods 6.4.6-1
6.4.7 DIDO Fuel Assemblies 6.4.7-1
6.4.8 General Atomics Irradiated Fuel Material 6.4.8-1
6.4.9 PULSTAR Fuel Contents 6.4.9-1
6.4.10 ANSTO Basket Payloads 6.4.10-1
6.5 Critical Benchmarks 6.4.10-1
6.5.1 PWR and BWR Fuel Assemblies 6.5.1-1
6.5.2 MTR and DIDO Fuel Elements 6.5.2-1
6.5.3 TRIGA Fuel Elements 6.5.3-1

Note: See separate Section 6.6 for Appendices to this chapter.

List of Figures

Figure 6.2.3-1 Design Basis HFBR MTR Fuel Element 6.2.3-2
Figure 6.2.5-1 Aluminum Clad TRIGA Fuel Element 6.2.5-2
Figure 6.2.5-2 Stainless Steel Clad TRIGA Fuel Element 6.2.5-3
Figure 6.2.6-1 TRIGA Fuel Cluster Rod Details 6.2.6-2
Figure 6.2.8-1 DIDO Fuel Assembly 6.2.8-2
Figure 6.2.10-1 PULSTAR Fuel Assembly 6.2.10-2
Figure 6.2.11-1 Spiral Fuel Assembly Cross-Section Sketch 6.2.11-2
Figure 6.2.12-1 MOATA Plate Bundle Sketch 6.2.12-2
Figure 6.3.1-1 KENO-Va Model of the NAC-LWT Cask Model with PWR Basket and 15×15 PWR Assembly 6.3.1-4
Figure 6.3.1-2 KENO-Va Model of the NAC-LWT Cask with PWR Basket and Westinghouse 17×17 OFA Assembly 6.3.1-5
Figure 6.3.2-1 KENO-Va Model of the NAC-LWT Cask Model with BWR Basket and 2 Exxon 9×9-2/80 Assemblies 6.3.2-3
Figure 6.3.3-1 KENO-Va Fuel/Basket Unit Cell Model for MTR Fuel 6.3.3-4
Figure 6.3.3-2 KENO-Va Model of NAC-LWT Cask with MTR Fuel 6.3.3-5
Figure 6.3.3-3 Intermediate MTR 42 Basket Module 6.3.3-6
Figure 6.3.3-4 Full Length NAC-LWT Cask Model with 42 MTR Fuel Elements 6.3.3-7
Figure 6.3.3-5 MTR Fuel Basket Module Loading Pattern 6.3.3-8
Figure 6.3.4-1 Triangular Pitch Lattice Formation of 25 PWR Rods 6.3.4-4
Figure 6.3.4-2 KENO-Va Model of the NAC-LWT Cask with 25 PWR Rods 6.3.4-5
Figure 6.3.4-3 Maximum Reactivity Triangular Pitch Lattice Formation of Damaged Fuel Rods 6.3.4-6
Figure 6.3.4-4 KENO-Va Model of the NAC-LWT Cask with Damaged Fuel Rods – Radial Detail 6.3.4-7
Figure 6.3.4-5 KENO-Va Model of the NAC-LWT Cask with Damaged Fuel Rods – Axial Detail 6.3.4-8
Figure 6.3.5-1 Fuel Rod Handling Insert for TRIGA Fuel Cluster Rods 6.3.5-5
Figure 6.3.5-2 Fuel/Basket Unit Cell Model for TRIGA Fuel Elements 6.3.5-6
Figure 6.3.5-3 NAC-LWT Cask with TRIGA Fuel, Nonpoisoned Basket - Radial View .. 6.3.5-7
Figure 6.3.5-4 KENO-Va Model of NAC-LWT with Poisoned Basket - Radial View 6.3.5-8
Figure 6.3.5-5 NAC-LWT Cask Model with TRIGA Fuel Elements, Nonpoisoned Basket - Axial View 6.3.5-9
Figure 6.3.5-6 Full-Length NAC-LWT Cask Model with TRIGA Fuel Elements, Nonpoisoned Basket - Axial View 6.3.5-10
Figure 6.3.6-1 Intermediate DIDO 42 Basket Module 6.3.6-3
Figure 6.3.6-2 KENO-Va DIDO Fuel in Fuel Tube and Basket Cross-Section 6.3.6-4
Figure 6.3.6-3 KENO-Va Model of NAC-LWT Cask Cross-Section with DIDO Fuel 6.3.6-5
Figure 6.3.6-4 Full Length NAC-LWT Cask Model with 42 DIDO Fuel Assemblies 6.3.6-6
Figure 6.3.7-1 PICTURE Representation of NAC-LWT Cavity with 'Rectangular' Array of GA IFM TRIGA Elements 6.3.7-2
Figure 6.3.7-2 PICTURE Representation of NAC-LWT Cavity with 'Square' Array of GA IFM TRIGA Elements 6.3.7-2

Figure 6.3.7-3 KENO-Va Model of NAC-LWT Cask Cross-Section with GA IFM 6.3.7-3
Figure 6.3.8-1 PICTURE Representation of NAC-LWT Cavity with PULSTAR Assemblies 6.3.8-3
Figure 6.3.8-2 PICTURE Representation of NAC-LWT Cavity with PULSTAR Elements in 4×4 Rod Insert 6.3.8-3
Figure 6.3.8-3 PICTURE Representation of NAC-LWT Cavity with Canned Discrete PULSTAR Elements 6.3.8-4
Figure 6.3.8-4 PICTURE Representation of NAC-LWT Cavity with Canned Homogenized PULSTAR Elements 6.3.8-4
Figure 6.3.8-5 KENO-Va Model of NAC-LWT Cask Cross-Section with 28 MTR 7-Element Basket 6.3.8-5
Figure 6.3.8-6 Finite Length KENO-Va Model of NAC-LWT Cask with 700 PULSTAR Fuel Elements 6.3.8-6
Figure 6.3.9-1 Intermediate ANSTO Basket Module 6.3.9-3
Figure 6.3.9-2 KENO-Va ANSTO Payloads and Basket Cross-Section 6.3.9-4
Figure 6.3.9-3 KENO-Va Model of NAC-LWT Cask Cross-Section with ANSTO Basket 6.3.9-5
Figure 6.4.3-1 Cask Interior Moderator Density and Blocked Cell Study Results 6.4.3-16
Figure 6.4.4-1 Maximum Reactivity Pitch Determination for Damaged BWR Rod Arrays – Water Exterior 6.4.4-8
Figure 6.4.4-2 Maximum Reactivity Pitch Determination for Damaged PWR Rod Arrays – Water Exterior 6.4.4-8
Figure 6.4.4-3 Maximum Reactivity Determination for Homogenized UO_2/Water Mixture 6.4.4-9
Figure 6.4.5-1 Finite Cask Array Reactivity versus Fuel Zirconium Mass (Dry Cask Cavity) 6.4.5-14
Figure 6.4.5-2 Finite Cask Array Reactivity versus H/Zr Ratio (Dry Cask Cavity) 6.4.5-14
Figure 6.4.5-3 Finite Cask Array Reactivity versus Fuel Mass (Study of ZrH Displacement of Fissile Material for a Fixed Fuel Geometry) 6.4.5-15
Figure 6.4.5-4 Intact Fuel Optimum Moderator Study – 70 wt % ^{235}U Various Zirconium Masses 6.4.5-15
Figure 6.4.5-5 Detailed Intact Fuel Optimum Moderator Study – H/Zr Ratio, Fuel Element Characteristics and Location Varied 6.4.5-16
Figure 6.4.5-6 Screened and Sealed Can Optimum Moderator Study – Maximum Reactivity Fuel Configuration – 70 wt% ^{235}U Steel Clad 6.4.5-16
Figure 6.4.5-7 Screened and Sealed Can Debris Height Study – Maximum Reactivity Fuel Configuration – 70 wt% ^{235}U Steel Clad 6.4.5-17
Figure 6.4.5-8 Screened Can – 4 Elements per Can – Maximum Reactivity Fuel Configuration – 70 wt% ^{235}U Steel Clad 6.4.5-17
Figure 6.4.6-1 HEU Cluster Rod Reactivity versus H/Zr Ratio – Accident Condition Cask Array 6.4.6-9
Figure 6.4.6-2 LEU Cluster Rod Reactivity versus H/Zr Ratio – Accident Condition Cask Array 6.4.6-9
Figure 6.4.6-3 HEU TRIGA Cluster Rod System Reactivity versus Cask Cavity Moderator 6.4.6-10

Figure 6.4.6-4 LEU TRIGA Cluster Rod System Reactivity versus Cask Cavity Moderator 6.4.6-10
Figure 6.4.6-5 TRIGA Cluster Rod Reactivity versus Damaged Fuel Can Moderator (Pref Flood – Dry Cask Cavity) 6.4.6-11
Figure 6.4.9-1 PICTURE Schematic of Modified PULSTAR Fuel Assembly Alignment Configuration 6.4.9-5
Figure 6.4.9-2 PULSTAR Intact Assembly Model Moderator Density Study Graphical Results 6.4.9-6
Figure 6.4.10-1 Spiral Fuel - Moderator Density Plot 6.4.10-7
Figure 6.4.10-2 MOATA Plate Bundle -Moderator Density Plot 6.4.10-8
Figure 6.5.1-1 KENO-Va Validation—27 Group Library Results: Frequency Distribution of k_{eff} Values 6.5.1-6
Figure 6.5.1-2 KENO-Va Validation—27-Group Library Results: k_{eff} versus Enrichment 6.5.1-7
Figure 6.5.1-3 KENO-Va Validation—27-Group Library Results: k_{eff} versus Rod Pitch .. 6.5.1-8
Figure 6.5.1-4 KENO-Va Validation—27-Group Library Results: k_{eff} versus H/U Volume Ratio 6.5.1-9
Figure 6.5.1-5 KENO-Va Validation—27-Group Library Results: k_{eff} versus Average Group of Fission 6.5.1-10

Note: See separate Section 6.6 for Appendices to this chapter, along with the List of Figures for the Appendices.

List of Tables

Table 6.2.1-1 B&W, CE and Westinghouse PWR Fuel Assembly Data 6.2.1-2
Table 6.2.1-2 Exxon/ANF PWR Fuel Assembly Data 6.2.1-3
Table 6.2.2-1 GE BWR Fuel Assembly Data 6.2.2-2
Table 6.2.2-2 Exxon BWR Fuel Assembly Data 6.2.2-2
Table 6.2.2-3 BWR Fuel Assembly Data 6.2.2-3
Table 6.2.3-1 Characteristics of Design Basis HEU MTR Fuels 6.2.3-3
Table 6.2.3-2 Characteristics of Design Basis LEU MTR Fuel 6.2.3-6
Table 6.2.3-3 Characteristics of Design Basis MEU MTR Fuel 6.2.3-7
Table 6.2.5-1 Characteristics of Design Basis TRIGA Fuels Elements 6.2.5-4
Table 6.2.5-2 Characteristics of Design Basis TRIGA Fuels -Fuel Compositions 6.2.5-5
Table 6.2.6-1 Characteristics of TRIGA Fuel Cluster Rods 6.2.6-3
Table 6.2.6-2 Characteristics of TRIGA Fuel Cluster Rods - Fuel Compositions 6.2.6-3
Table 6.2.7-1 Characteristics of Design-Basis Metallic Fuel Rods 6.2.7-2
Table 6.2.8-1 Characteristics of DIDO Fuel Assemblies 6.2.8-3
Table 6.2.8-2 DIDO Fuel Assembly Tolerances 6.2.8-3
Table 6.2.9-1 GA IFM RERTR/TRIGA Fuel Parameters 6.2.9-3
Table 6.2.9-2 GA IFM RERTR/TRIGA Fuel Composition 6.2.9-3
Table 6.2.9-3 GA IFM RERTR/TRIGA Clad Composition 6.2.9-3
Table 6.2.9-4 GA IFM Elemental Constituents 6.2.9-4
Table 6.2.9-5 GA IFM Primary and Secondary Enclosure Dimensions 6.2.9-4
Table 6.2.10-1 PULSTAR Fuel Characteristics 6.2.10-3
Table 6.2.11-1 Spiral Fuel Assemblies Characteristics 6.2.11-3
Table 6.2.11-2 Spiral Fuel Assemblies Tolerances Applied 6.2.11-3
Table 6.2.12-1 MOATA Plate Bundle Characteristics 6.2.12-3
Table 6.2.12-2 MOATA Plate Bundle Tolerances Applied 6.2.12-4
Table 6.3.1-1 Compositions and Number Densities Used in the Criticality Analysis of PWR Fuel Assemblies 6.3.1-6
Table 6.3.2-1 Compositions and Number Densities Used in the Criticality Analysis of BWR Fuel Assemblies 6.3.2-4
Table 6.3.3-1 Composition Densities Used in Criticality Analysis of MTR Fuel 6.3.3-9
Table 6.3.4-1 Compositions and Number Densities Used in the Criticality Analysis of PWR and BWR Rods 6.3.4-9
Table 6.3.5-1 Sample Compositions and Number Densities Used in Criticality Analysis of TRIGA Fuel Elements 6.3.5-11
Table 6.3.5-2 Sample Composition and Number Densities Used in Criticality Analysis of TRIGA Fuel Cluster Rods 6.3.5-12
Table 6.3.6-1 DIDO Fuel Parameters 6.3.6-7
Table 6.3.6-2 DIDO Basket and Cask Parameters 6.3.6-8
Table 6.3.6-3 Composition Densities Used in Criticality Analysis of DIDO Fuel 6.3.6-9
Table 6.3.7-1 Composition Densities Used in Criticality Analysis of GA IFM 6.3.7-4
Table 6.3.8-1 Composition Densities Used in Criticality Analysis of PULSTAR Fuel 6.3.8-7
Table 6.3.9-1 ANSTO Basket and Cask Parameters 6.3.9-6
Table 6.3.9-2 Composition Densities Used in Criticality Analysis of ANSTO Basket Payloads 6.3.9-7

List of Tables (Continued)

Table 6.4.1-1 PWR Fuel Assembly at 3.7% Enrichment Most Reactive Assembly Results 6.4.1-5
Table 6.4.1-2 PWR Fuel Assembly at 3.5% Enrichment Most Reactive Assembly Results 6.4.1-6
Table 6.4.1-3 Westinghouse 17×17 OFA Assembly Geometric Tolerances and Mechanical Perturbations Results 6.4.1-7
Table 6.4.1-4 Exxon 15×15 Geometric Tolerances and Mechanical Perturbations Results 6.4.1-7
Table 6.4.1-5 Reactivity with Design Basis PWR Fuel vs. Basket Moderator Density, Normal Conditions 6.4.1-8
Table 6.4.1-6 Reactivity with Design Basis PWR Fuel vs. Basket Moderator Density, Accident Conditions 6.4.1-9
Table 6.4.1-7 PWR Single Package 10 CFR 71.55(b)(3) Evaluation k_{eff} Summary for 3.5% Enrichment 6.4.1-10
Table 6.4.1-8 PWR Single Package 10 CFR 71.55(b)(3) Evaluation k_{eff} Summary for 3.7% Enrichment 6.4.1-10
Table 6.4.2-1 BWR Most Reactive Assembly Analysis Results 6.4.2-5
Table 6.4.2-2 BWR Basket Tolerances 6.4.2-6
Table 6.4.2-3 BWR Fuel Assembly Geometric Tolerances and Mechanical Perturbations Results 6.4.2-7
Table 6.4.2-4 Reactivity with BWR Fuel vs. Basket Moderator Density, Normal Conditions, Array of 20 Casks 6.4.2-8
Table 6.4.2-5 Reactivity with BWR Fuel vs. Basket Moderator Density, Accident Conditions, Array of 20 Casks 6.4.2-9
Table 6.4.2-6 BWR Single Package 10 CFR 71.55(b)(3) Evaluation k_{eff} Summary 6.4.2-10
Table 6.4.3-1 Fuel/Basket Unit Cell k_{eff} versus MTR Fuel Element Type 6.4.3-17
Table 6.4.3-2 Cask k_{eff} versus Fuel Plate Spacing 6.4.3-17
Table 6.4.3-3 MTR Basket Geometric Tolerances 6.4.3-18
Table 6.4.3-4 MTR Basket/Intact Fuel Element Geometric Tolerances and Mechanical Perturbations Results 6.4.3-18
Table 6.4.3-5 MTR Basket/Optimally Spaced Fuel Plates Geometric Tolerances and Mechanical Perturbations Results 6.4.3-18
Table 6.4.3-6 Reactivity with MTR Fuel vs. Basket Moderator Density, Normal Conditions, Dry Exterior, Infinite Array of Casks 6.4.3-19
Table 6.4.3-7 Reactivity with MTR Fuel vs. Basket Moderator Density, Accident Conditions, Dry Exterior, Infinite Array of Casks 6.4.3-20
Table 6.4.3-8 MTR Fuel Element Rotation Perturbation Study 6.4.3-21
Table 6.4.3-9 MTR Basket/Center Fuel Element Perturbation Study 6.4.3-21
Table 6.4.3-10 Mixed HEU/LEU MTR Fuel Perturbation Study 6.4.3-21
Table 6.4.3-11 MTR Single Package 10 CFR 71.55(b)(3) Evaluation k_{eff} Summary 6.4.3-21
Table 6.4.3-12 MTR Fuel Uranium Weight Percentage Perturbations 6.4.3-22
Table 6.4.3-13 MEU MTR Unit Cell k_{eff} Comparison (Enrichment Variation) 6.4.3-22
Table 6.4.3-14 MEU MTR Basket k_{eff} Comparison (Plate Location) 6.4.3-23

List of Tables (Continued)

Table 6.4.3-15 Physical Characteristics of McMaster MTR Fuels 6.4.3-23
Table 6.4.3-16 Reactivity of Various Parameter Variations for 10-Plate McMaster Element 6.4.3-24
Table 6.4.3-17 Reactivity of Various Parameter Variations for 18-Plate McMaster Element 6.4.3-24
Table 6.4.3-18 MTR Limiting Fuel Configurations 6.4.3-25
Table 6.4.3-19 Initial Fuel Configurations for MTR Bounding Evaluations 6.4.3-25
Table 6.4.3-20 Reactivity Impact of Parameter Variations in the Finite Cask Model 6.4.3-26
Table 6.4.3-21 Baseline MTR Bounding Configurations 6.4.3-27
Table 6.4.3-22 High Fissile Mass MTR Fuel – Bounding Parameter Analysis 6.4.3-28
Table 6.4.3-23 MTR High Fissile Content Loading Evaluation (460 g ^{235}U) 6.4.3-29
Table 6.4.3-24 LEU MTR Active Fuel Width Increase Evaluation 6.4.3-29
Table 6.4.3-25 Summary of LEU MTR Bounding Configurations 6.4.3-30
Table 6.4.3-26 Summary of Previous Bounding Configurations for Use in High Mass LEU Calculations 6.4.3-31
Table 6.4.3-27 High Fissile Mass LEU (32 g ^{235}U per Plate) Analysis Results 6.4.3-32
Table 6.4.3-28 LEU High Fissile Mass Bounding Configuration 6.4.3-33
Table 6.4.3-29 Cask Interior Moderator Density and Blocked Cell Study Results 6.4.3-34
Table 6.4.4-1 NAC-LWT Cask with 25 PWR Rods, k_{eff} versus Fuel Rod Pitch, 5.0 wt % ^{235}U Initial Enrichment 6.4.4-10
Table 6.4.4-2 Reactivity with 25 PWR Rods vs. Basket Moderator Density, Normal Conditions, Infinite Array of Casks 6.4.4-11
Table 6.4.4-3 Reactivity with 25 PWR Rods vs. Basket Moderator Density, Accident Conditions, Infinite Array of Casks 6.4.4-12
Table 6.4.4-4 PWR Rods, Single Package 10 CFR 71.55(b)(3) Evaluation k_{eff} Summary 6.4.4-13
Table 6.4.4-5 NAC-LWT Cask with 25 BWR rods, k_{eff} versus Fuel Rod Pitch, 5.0 wt % ^{235}U Initial Enrichment 6.4.4-13
Table 6.4.4-6 Reactivity with 25 BWR Rods vs. Basket Moderator Density, Normal Conditions, Infinite Array of Casks 6.4.4-14
Table 6.4.4-7 Reactivity with 25 BWR Rods vs. Basket Moderator Density, Accident Conditions, Infinite Array of Casks 6.4.4-15
Table 6.4.4-8 BWR Rods, Single Package 10 CFR 71.55(b)(3) Evaluation k_{eff} Summary 6.4.4-16
Table 6.4.4-9 Maximum Reactivity Pitch Determination for 25 BWR Rods – Water Exterior 6.4.4-16
Table 6.4.4-10 Maximum Reactivity Pitch Determination for 25 PWR Rods – Water Exterior 6.4.4-17
Table 6.4.4-11 Maximum Reactivity Pitch Determination for 37 BWR Rods – Water Exterior 6.4.4-17
Table 6.4.4-12 Maximum Reactivity Pitch Determination for 37 PWR Rods – Water Exterior 6.4.4-18

List of Tables (Continued)

Table 6.4.4-13 Maximum Reactivity Pitch Determination for 61 BWR Rods – Water Exterior 6.4.4-18
Table 6.4.4-14 Maximum Reactivity Pitch Determination for 61 PWR Rods – Water Exterior 6.4.4-19
Table 6.4.4-15 Maximum Reactivity Pitch Determination for 61 BWR Rods – Void Exterior 6.4.4-19
Table 6.4.4-16 Maximum Reactivity Pitch Determination for 61 PWR Rods – Void Exterior 6.4.4-20
Table 6.4.4-17 Maximum Reactivity Pitch Determination for 61 BWR Rods – Void Exterior and Preferential Flooding of Cask Cavity 6.4.4-20
Table 6.4.4-18 Maximum Reactivity Pitch Determination for 61 PWR Rods – Void Exterior and Preferential Flooding of Cask Cavity 6.4.4-21
Table 6.4.4-19 Damaged Rod Array Area Calculation – Flooded Cask Cavity 6.4.4-21
Table 6.4.4-20 Damaged Rod Array Area Calculation – Preferential Flooding 6.4.4-22
Table 6.4.4-21 Maximum Reactivity Determination for Homogenized UO_2/Water Mixture 6.4.4-22
Table 6.4.4-22 Homogenized UO_2/Water Cask Cavity Moderator Density Study Results - Void Exterior 6.4.4-22
Table 6.4.4-23 Homogenized UO_2/Water Cask Cavity Moderator Density Study Results - Water Exterior 6.4.4-23
Table 6.4.4-24 Homogenized UO_2/Water Exterior Moderator Density Study Results – Void Cask Cavity 6.4.4-23
Table 6.4.4-25 Homogenized UO_2/Water Exterior Moderator Density Study Results – Water Cask Cavity 6.4.4-24
Table 6.4.4-26 Single Cask Containment Reflected Results Comparison for Homogenized UO_2/Water Model 6.4.4-24
Table 6.4.5-1 Parametric Study – Fuel / Basket k-infinity versus TRIGA Fuel Element Type, Nonpoisoned Basket 6.4.5-18
Table 6.4.5-2 Parametric Study – Cask k_{eff} versus TRIGA Fuel Element Type, Poisoned Basket 6.4.5-19
Table 6.4.5-3 Axially Infinite Cask k_{eff} with TRIGA Fuel Elements- Fuel Element Placement Perturbations, Nonpoisoned Basket 6.4.5-20
Table 6.4.5-4 Axially Infinite Cask k_{eff} with TRIGA Fuel Elements - Fuel Element Placement Perturbations, Poisoned Basket 6.4.5-20
Table 6.4.5-5 Axially Infinite Cask k_{eff} with TRIGA Fuel Elements – Basket Manufacturing Tolerance Perturbations, Nonpoisoned Basket 6.4.5-21
Table 6.4.5-6 Axially Infinite Cask k_{eff} with TRIGA Fuel Elements – Basket Manufacturing Tolerance Perturbations, Poisoned Basket 6.4.5-21
Table 6.4.5-7 Screened Can Preferential Flooding and Partial Loading Reactivity Evaluations for TRIGA Fuel Elements, Nonpoisoned and Poisoned Baskets 6.4.5-22

List of Tables (Continued)

Table 6.4.5-8 Sealed Can Preferential Flooding and Partial Loading Reactivity Evaluations for TRIGA Fuel Elements, Nonpoisoned and Poisoned Baskets 6.4.5-23
Table 6.4.5-9 Summary of Most Reactive Configurations, TRIGA Fuel Elements, Nonpoisoned Basket 6.4.5-24
Table 6.4.5-10 Summary of Most Reactive Configurations, TRIGA Fuel Elements, Poisoned Basket 6.4.5-24
Table 6.4.5-11 Reactivity Results for TRIGA Fuel Elements, Sealed Cans, Normal Conditions, Nonpoisoned Basket 6.4.5-25
Table 6.4.5-12 Reactivity Results for TRIGA Fuel Elements, Sealed Cans, Accident Conditions, Nonpoisoned Basket 6.4.5-26
Table 6.4.5-13 Reactivity Results for TRIGA Fuel Elements, Screened Cans, Normal Conditions, Poisoned Basket 6.4.5-27
Table 6.4.5-14 Reactivity Results for TRIGA Fuel Elements, Screened Cans, Accident Conditions, Poisoned Basket 6.4.5-28
Table 6.4.5-15 Single Package 10 CFR 71.55(b)(3) Evaluation k_{eff} Summary, TRIGA Fuel Element, Nonpoisoned Basket 6.4.5-29
Table 6.4.5-16 Single Package 10 CFR 71.55(b)(3) Evaluation k_{eff} Summary, TRIGA Fuel Element, Poisoned Basket 6.4.5-29
Table 6.4.5-17 Fuel Element Physical Characteristics Evaluation 6.4.5-30
Table 6.4.5-18 Element Variation to Reduce k_s Below 0.95 ..... 6.4.5-31
Table 6.4.5-19 General Model Configuration – Dry to Wet System Reactivity Changes, 70 wt% ^{235}U Stainless Steel Clad Fuel - Nominal Fuel Parameters 6.4.5-31
Table 6.4.5-20 Primary Fuel Type Reactivity Comparison – Accident Conditions Eight-Cask Array (No Cans) 6.4.5-32
Table 6.4.5-21 Normal Condition Maximum System Reativities (No Cans)[2] 6.4.5-32
Table 6.4.6-1 Cask k_{eff} with TRIGA Fuel Cluster Rods – Fuel Rod Placement Perturbations, Nonpoisoned Basket 6.4.6-12
Table 6.4.6-2 Cask k_{eff} with TRIGA Fuel Cluster Rods – Fuel Rod Placement Perturbations, Poisoned Basket 6.4.6-12
Table 6.4.6-3 Axially Infinite Cask k_{eff} with TRIGA Fuel Cluster Rods – Basket and Insert Manufacturing Tolerance Perturbations, Nonpoisoned Basket 6.4.6-13
Table 6.4.6-4 Axially Infinite Cask k_{eff} with TRIGA Fuel Cluster Rods – Basket and Insert Manufacturing Tolerance Perturbations, Poisoned Basket 6.4.6-14
Table 6.4.6-5 Sealed Can Preferential Flooding and Partial Loading Reactivity Evaluations for TRIGA Fuel Rod Clusters, Nonpoisoned Basket 6.4.6-15
Table 6.4.6-6 Sealed Can Preferential Flooding and Partial Loading Reactivity Evaluations for TRIGA Fuel Rod Clusters, Poisoned Basket 6.4.6-15
Table 6.4.6-7 Summary of Most Reactive Configurations, TRIGA Fuel Cluster Rods, Nonpoisoned Basket 6.4.6-16
Table 6.4.6-8 Summary of Most Reactive Configurations, TRIGA Fuel Cluster Rods, Poisoned Basket 6.4.6-16

List of Tables (Continued)

Table 6.4.6-9 Reactivity Results for TRIGA Fuel Cluster Rods, Sealed Cans, Normal Conditions, Nonpoisoned Basket 6.4.6-17
Table 6.4.6-10 Reactivity Results for TRIGA Fuel Cluster Rods, Sealed Can, Accident Conditions, Nonpoisoned Basket 6.4.6-18
Table 6.4.6-11 Reactivity Results for TRIGA Fuel Cluster Rods, Sealed Cans, Normal Conditions, Poisoned Basket 6.4.6-19
Table 6.4.6-12 Reactivity Results for TRIGA Fuel Cluster Rods, Sealed Cans, Accident Conditions, Poisoned Basket 6.4.6-20
Table 6.4.6-13 Single Package 10 CFR 71.55(b)(3) Evaluation k_{eff} Summary, TRIGA Fuel Cluster Rod, Nonpoisoned Basket 6.4.6-21
Table 6.4.6-14 Single Package 10 CFR 71.55(b)(3) Evaluation k_{eff} Summary, TRIGA Fuel Cluster Rod, Poison Basket 6.4.6-21
Table 6.4.6-15 Increased Fuel Dimensional Parameter k_{eff} Summary, TRIGA Fuel Cluster Rod, Nonpoisoned Basket 6.4.6-21
Table 6.4.6-16 TRIGA Cluster Rod Reactivities – Accident Conditions 6.4.6-22
Table 6.4.6-17 TRIGA Cluster Rod Reactivities – Normal Conditions 6.4.6-22
Table 6.4.6-18 TRIGA Cluster Rod Reactivities – Single Cask with Containment Fully Water Reflected 6.4.6-22
Table 6.4.6-19 Summary of TRIGA Cluster Rod Maximum Reactivity Configuration ... 6.4.6-23
Table 6.4.6-20 Licensing Parameters for TRIGA Cluster Rods 6.4.6-23
Table 6.4.7-1 Normal Condition HEU, LEU, MEU DIDO Evaluation 6.4.7-7
Table 6.4.7-2 HEU DIDO Accident Evaluation – Radial Shift and Exterior Moderator Density Variation 6.4.7-8
Table 6.4.7-3 DIDO Heat Shunt and Aluminum Shell Evaluation Results 6.4.7-8
Table 6.4.7-4 DIDO Basket Geometric Tolerance Study Results 6.4.7-8
Table 6.4.7-5 DIDO Fuel Assembly Tolerance Study Results 6.4.7-9
Table 6.4.7-6 DIDO Fuel Maximum Reactivity Combinations 6.4.7-10
Table 6.4.7-7 Moderator Density Study for the Infinite Array of Casks (Nominal Fuel and Basket Configuration) 6.4.7-11
Table 6.4.7-8 DIDO Single Package 10 CFR 71.55(b)(3) Evaluation k_{eff} Summary 6.4.7-12
Table 6.4.7-9 DIDO Fuel Assembly Tolerance Study Results (Reduced Clad Thickness) 6.4.7-12
Table 6.4.7-10 DIDO Fuel Maximum Reactivity Combinations (Reduced Clad Thickness) 6.4.7-12
Table 6.4.7-11 DIDO Fuel Maximum Reactivity Combinations (Reduced Clad and Maximum Pitch) 6.4.7-13
Table 6.4.7-12 DIDO Bounding Configurations 6.4.7-14
Table 6.4.8-1 GA IFM Payload Evaluation Result Summary 6.4.8-5
Table 6.4.8-2 GA IFM TRIGA Rectangular Array Pitch Evaluation Result Summary 6.4.8-6
Table 6.4.8-3 GA IFM TRIGA Square Array Pitch Evaluation Result Summary 6.4.8-6
Table 6.4.8-4 GA IFM Interior Moderator Density Evaluation Result Summary 6.4.8-7
Table 6.4.8-5 GA IFM HTGR Matrix Moderator Density Evaluation Result Summary .. 6.4.8-8
Table 6.4.8-6 GA IFM Exterior Moderator Density Evaluation Result Summary 6.4.8-10

List of Tables (Continued)

Table 6.4.8-7 GA IFM Partial Flooding Comparison Result Summary....6.4.8-11
Table 6.4.8-8 GA IFM Partial Flooding Interior Moderator Density, Void Exterior Result Summary....6.4.8-11
Table 6.4.8-9 GA IFM Partial Flooding Interior Moderator Density, Water Exterior Result Summary....6.4.8-12
Table 6.4.8-10 GA IFM Partial Flooding Exterior Moderator Density, Void Interior Result Summary....6.4.8-13
Table 6.4.8-11 GA IFM Partial Flooding Exterior Moderator Density, Water Interior Result Summary....6.4.8-14
Table 6.4.8-12 GA IFM Partial Flooding Single Cask Result Comparison....6.4.8-14
Table 6.4.8-13 GA IFM Damaged TRIGA Fuel Result Summary....6.4.8-15
Table 6.4.9-1 PULSTAR Intact Assembly Shift Results....6.4.9-7
Table 6.4.9-2 PULSTAR Intact Assembly Mechanical Perturbation Results....6.4.9-7
Table 6.4.9-3 PULSTAR Intact Assembly Lattice Moderator Ratio Results....6.4.9-8
Table 6.4.9-4 PULSTAR Canned Intact Element Results....6.4.9-8
Table 6.4.9-5 PULSTAR Canned Homogenized Element Results....6.4.9-9
Table 6.4.9-6 PULSTAR Maximum Reactivity Summary....6.4.9-10
Table 6.4.10-1 Spiral Fuel Assembly - Base Data Comparisons....6.4.10-9
Table 6.4.10-2 Spiral Fuel Assembly - Basket Tolerance Evaluations....6.4.10-10
Table 6.4.10-3 Spiral Fuel Assembly – Fuel Tolerance Evaluations....6.4.10-11
Table 6.4.10-4 Spiral Fuel Assembly - Moderator Density Variations....6.4.10-12
Table 6.4.10-5 Spiral Fuel Assembly - Maximum Reactivity Case Summary....6.4.10-13
Table 6.4.10-6 MOATA Plate Bundle - Base Data Comparisons....6.4.10-14
Table 6.4.10-7 MOATA Plate Bundle – Basket Tolerance Evaluations....6.4.10-15
Table 6.4.10-8 MOATA Plate Bundle - Fuel Tolerance Evaluations....6.4.10-16
Table 6.4.10-9 MOATA Plate Bundle - Moderator Density Variations....6.4.10-17
Table 6.4.10-10 MOATA Plate Bundle - Maximum Reactivity Case Summary....6.4.10-18
Table 6.5.1-1 KENO-Va and 27-Group Library Validation Statistics....6.5.1-11
Table 6.5.2-1 Criticality Results for High Enrichment Uranium Systems....6.5.2-3

6.4.5 TRIGA Fuel Elements

This section presents the criticality evaluation for TRIGA fuel elements in the NAC-LWT with non-poisoned and poisoned basket modules for intact and failed fuel. In the non-poisoned configuration, up to 120 intact TRIGA fuel elements can be transported in the NAC-LWT cask. In the poisoned configuration, up to 140 intact TRIGA elements can be transported in the NAC-LWT cask. Up to four TRIGA fuel elements can be contained in screened canisters. Up to two failed TRIGA fuel elements can be contained in sealed canisters. The analyses are performed to satisfy the requirements of 10 CFR Parts 71.55 and 71.59 as well as IAEA Transportation Safety Standards (TS-R-1).

The most reactive TRIGA fuel element type in the NAC-LWT TRIGA basket is evaluated in Section 6.4.5.1. The most reactive basket and intact fuel configurations, including both geometric perturbations and manufacturing tolerances, under wet and dry conditions are evaluated in Section 6.4.5.2. The most reactive cask configuration with three baskets of intact design-basis TRIGA fuel and two baskets of fuel, either in screened cans or in sealed cans, is evaluated under normal and accident conditions in Section 6.4.5.3. Preferential flooding of the screened and sealed failed fuel cans is also evaluated. The maximum k_{eff} of the NAC-LWT cask loaded with design-basis TRIGA fuel is evaluated under normal and accident conditions in Section 6.4.5.4. A single package evaluation, in accordance with 10 CFR 71.55(b)(3), is performed in Section 6.4.5.5. The analyses demonstrate that, including all calculational and mechanical uncertainties, the NAC-LWT cask remains subcritical ($k_s < 0.95$) under normal and accident conditions.

Any combination of TRIGA fuel element types can be placed in the NAC-LWT TRIGA baskets. TRIGA fuel cluster rods are analyzed as separate loadings in Section 6.4.6 and will not be shipped with TRIGA fuel elements.

6.4.5.1 Most Reactive TRIGA Fuel Element

Of the four main types of TRIGA fuel elements (Table 6.2.5-1), three (aluminum clad, stainless steel clad, and FFCR) are explicitly analyzed to determine which element is bounding in terms of criticality. The ACPR fuel element and fuel follower control rod types are eliminated from consideration due to their low ^{235}U loading. For steel clad fuel, the standard, and FLIP LEU-I compositions (Table 6.2.5-2) are also eliminated from further consideration due to their low ^{235}U loading. These element types are bounded by this analysis. The two types of Al clad fuel elements, each with 20 wt % ^{235}U loading are analyzed, and the two types of stainless steel clad elements (standard streamlined and standard plain) both enriched to either 20 wt % or 70 wt % in

^{235}U are analyzed. The FFCR element is analyzed with FLIP LEU-I composition enriched to 20 wt % ^{235}U.

6.4.5.1.1 Nonpoisoned Basket Most Reactive TRIGA Fuel Element Evaluation

The parametric evaluation of the TRIGA fuel element types for the nonpoisoned basket is performed with the fuel/basket unit cell infinite array model. The reactivities of the seven candidate fuel types are presented in Table 6.4.5-1. The results show that the stainless steel clad, standard plain, TRIGA fuel element with FLIP composition at 70 wt % ^{235}U is the most reactive of all TRIGA fuel element types. Table 6.4.5-1 also includes the results for several combinations of steel FLIP LEU (20 wt % ^{235}U) and FLIP HEU (70 wt % ^{235}U) which are bounded by the results for four 70 wt % ^{235}U elements per basket cell.

6.4.5.1.2 Poisoned Basket Most Reactive TRIGA Fuel Element Evaluation

The parametric evaluation of TRIGA fuel element types for the poisoned basket is performed with an infinite cask array model. The reactivity of the candidate fuel types is presented in Table 6.4.5-2. Again, the results show that the stainless steel clad, standard plain, TRIGA fuel element with FLIP composition at 70 wt % ^{235}U is the most reactive of all TRIGA fuel element types, and combinations of steel FLIP LEU (20 wt % ^{235}U) and FLIP HEU (70 wt % ^{235}U) are bounded by the results for four 70 wt % ^{235}U elements per basket cell. Because of the low relative reactivity of the 14-inch aluminum clad and FFCR (Table 6.4.5-1) elements, it is not necessary to re-analyze these elements.

6.4.5.1.3 Summary of Most Reactive TRIGA Fuel Element Evaluation

The stainless steel clad, standard plain, TRIGA fuel element with FLIP composition at 70 wt% ^{235}U is the most reactive of all TRIGA fuel element types in the poisoned and non-poisoned baskets. Four of these elements in basket openings bound the other element types and any combination with other such elements. This TRIGA fuel element type and the TRIGA fuel cluster rods will be utilized in subsequent evaluations of the NAC-LWT cask with poisoned and non-poisoned baskets.

6.4.5.2 Most Reactive Fuel Element and Basket Configurations

The primary basket tolerances affecting system reactivity are geometric tolerances, including the positioning of the fuel elements in the cell opening, the size of the cell opening; and manufacturing tolerances, including the thickness of the steel plate dividing the basket openings. The effect of these tolerances is evaluated sequentially in this section.

6.4.5.2.1 Geometric Perturbations

The TRIGA fuel elements are held in place by basket modules. Each cell opening in the basket module can contain up to four TRIGA fuel elements. The TRIGA fuel elements are not constrained in the opening and, therefore, may shift to any location in the opening. Wet and dry conditions of the TRIGA fuel are evaluated to determine the most reactive fuel element and basket configuration.

Table 6.4.5-3 and Table 6.4.5-4 show the nonpoisoned and poisoned axially infinite basket cask k_{eff} with design-basis TRIGA fuel elements. The effects evaluated in the tables include fuel element movement and partial loading in wet and dry basket openings.

For each basket configuration, the most reactive wet configuration contains four design-basis TRIGA fuel elements moved outward to the corners of each cell opening, with $k_{eff} = 0.83468 \pm 0.00101$ and 0.87874 ± 0.00123 for nonpoisoned and poisoned basket configurations, respectively. Although the reactivity of the non-poisoned basket configurations with three fuel elements in a cell are similar to that with four rods, the four rod configuration is selected as the most reactive because it contains the greatest amount of ^{235}U. The wet configuration maximizes the moderation between TRIGA fuel elements within the wet cavity and is referred to as the wet configuration for TRIGA fuel elements.

The most reactive dry configuration, with no water in the neutron shield, contains four design-basis TRIGA fuel elements touching in each opening and moved inward to the basket center with $k_{eff} = 0.93434 \pm 0.00115$ and 0.88969 ± 0.00122 for nonpoisoned and poisoned basket configurations, respectively. This dry configuration minimizes the neutron leakage of TRIGA fuel elements within the dry basket and is referred to as the dry configuration for TRIGA fuel elements. The partial loading evaluations show a general decrease in reactivity with a decreasing number of fuel elements.

6.4.5.2.2 Manufacturing Tolerance Perturbations

In addition to geometric tolerances, the wet and dry configurations were evaluated to determine the effect of manufacturing tolerances. The dimensional ranges of the plate materials used to construct the basket openings are 0.28 inch minimum/0.3125 inch maximum for the center plate, 0.24 inch minimum/ 0.295 inch maximum for the outside divider plate, and 0.12 inch minimum/0.13 inch maximum for the outside plate. The cell opening is checked during fabrication to ensure a minimum cell opening of 3.38 inches square, and a maximum cell opening size of 3.48 inches square. The most reactive configurations based on geometric tolerances are utilized in this analysis.

Table 6.4.5-5 and Table 6.4.5-6 show the nonpoisoned and poisoned basket, cask k_{eff} with design-basis TRIGA fuel elements. The effects evaluated in the tables include perturbations on basket plate thickness and basket opening size. For the nonpoisoned basket, within statistical limits, the most reactive wet and dry configurations contain baskets with the minimum stainless steel thickness divider plates. The reactivity of these wet and dry configurations are k_{eff} = 0.86861 ± 0.00094 and k_{eff} = 0.90501 ± 0.00109, respectively. Furthermore, the most reactive dry configuration for manufacturing tolerances contains the minimum basket opening, k_{eff} = 0.90817 ± 0.00105. For the poisoned basket configuration, the perturbations do not significantly increase reactivity.

6.4.5.3 Sealed and Screened Cans Criticality Evaluation

Criticality calculations were performed in screened and sealed failed fuel cans in the top and base basket modules of the cask. Three cases are examined for each basket combination, an all dry system, a full wet system, and a preferentially wet system with water only in the screened or sealed failed fuel can. Fuel in sealed cans is modeled both homogeneously, heterogeneously, and with partial loadings. The three central modules contain intact fuel in the most reactive wet or dry configurations, as appropriate, as determined in Section 6.4.5.2. The reactivities of the failed fuel combinations are compared to the reactivities of respective intact fuel configurations, and moderator density studies are performed on the most reactive configurations in Section 6.4.5.4.

6.4.5.3.1 Screened Failed Fuel Can Evaluations

Table 6.4.5-7 shows the results of the preferential flooding and partial loading studies of the screened failed fuel can configurations with design-basis TRIGA fuel elements in non-poisoned and poisoned baskets. As seen in the table, the most reactive configurations for the NAC-LWT cask containing screened cans with TRIGA fuel elements is an infinite array of casks with dry cavities, loaded with preferentially flooded screened cans, with each can containing four fuel elements in the corners of the cans. The most reactive poisoned configuration also contains the maximum can opening size.

The reactivity, k_{eff}, for the nonpoisoned and poisoned configurations is 0.90926 ± 0.00126 and 0.90224 ± 0.00128, respectively. The reactivity of the screened cans in the nonpoisoned basket configuration is bounded by the sealed can evaluations presented in Section 6.4.5.3.2.

6.4.5.3.2 Sealed Failed Fuel Can Evaluations

Table 6.4.5-8 shows the results of the preferential flooding and partial loading studies of the sealed failed fuel can configurations with TRIGA fuel elements in non-poisoned and poisoned baskets. Included in the sealed can evaluations are homogenous fuel/moderator mixture cases,

representing fuel debris, with the mixture either being solid (no water), filling one half of the can or filling the whole can. Cases are evaluated for the solid in the mixture both with and without graphite.

As seen in the table, the most reactive configuration for the NAC-LWT cask with the non-poisoned basket containing sealed cans is for an infinite array of casks with dry cavities loaded with preferentially flooded, maximum diameter, sealed cans, each can containing a homogeneous mixture of water and the fissile material equivalent to two TRIGA fuel elements. The most reactive nonpoisoned configuration is $k_{eff} = 0.91355 \pm 0.00119$. The "Wet Cask / Wet Can, Elements Out" case for the non-poisoned basket was not analyzed because the reactivity of the element configurations is significantly lower than the homogenized mixture configurations.

The most reactive poisoned basket configuration is selected as the case containing flooded cask and cans with elements touching the can wall. The reactivity, k_{eff}, for this configuration is 0.88574 ± 0.00130. Since the screened can reactivity presented in Section 6.4.5.3.1 is higher, this configuration is bounded.

6.4.5.4 Moderator Density Criticality Evaluations for Intact TRIGA Fuel Elements

The evaluations for normal and accident conditions include moderator density variations in the cask cavity and external environment to the cask. One evaluation is performed for each basket (non-poisoned / poisoned) combination. Table 6.4.5-9 and Table 6.4.5-10 show the most reactive configurations for these combinations as determined in Section 6.4.5.3. The tables contain results for infinite axial length models for the intact fuel and finite axial length models with cask end caps for failed fuel. Comparing the reactivity of the more conservative infinite models with finite models is acceptable, provided the result with the highest k_{eff} is always selected. Alternately, converting conservative infinite axial length models to finite axial length models is equally acceptable.

As seen in Table 6.4.5-9, $k_{eff} = 0.93434 \pm 0.00115$ for the most reactive dry configuration with intact, TRIGA fuel elements in the non-poisoned basket. When reevaluated as a finite axial length cask model with end caps, the resulting $k_{eff} = 0.89731 \pm 0.00117$. As a result, the most reactive configuration of TRIGA fuel elements in the nonpoisoned basket becomes the configuration with two baskets with sealed cans preferentially flooded with a dry cask, $k_{eff} = 0.91355 \pm 0.00119$. This configuration is chosen for further moderator density variation evaluations. As seen in Table 6.4.5-10, the most reactive configuration of TRIGA fuel elements in the poisoned basket contains two screened cans preferentially flooded with a dry cask. This configuration is chosen for moderator density variations. Results of the moderator density

variation cases for normal and accident conditions for the two basket configurations are presented in Table 6.4.5-11 through Table 6.4.6-14.

As seen in Table 6.4.5-12, the most reactive configuration for the TRIGA fuel elements in the nonpoisoned basket contains two baskets with sealed cans, preferentially flooded, under accident conditions with no water in the cask interior, neutron shield, or exterior, $k_{eff} = 0.9136 \pm 0.0012$. Per Section 6.1.1, this corresponds to $k_s = 0.9328$.

As seen in Table 6.4.5-14, the most reactive configuration for the TRIGA fuel elements in the poisoned basket, contains two baskets with sealed cans, preferentially flooded, under accident conditions with no water in the cask interior, neutron shield, or exterior, $k_{eff} = 0.9022 \pm 0.0015$. Per Section 6.1.1, this corresponds to $k_s = 0.9220$.

6.4.5.5 Single Package Criticality Evaluation

To satisfy 10 CFR 71.55(b)(3), an analysis of the reflection of the containment system (inner shell) by water is performed on a single wet cask. Successive replacement of the cask radial shields with water reflection is also evaluated for each basket (nonpoisoned/poisoned) combination. As seen in Table 6.4.5-15 and Table 6.4.5-16, the reactivity of the system drops as each radial shield of the cask is replaced by water from the full cask surrounded by water, to the inner shell surrounded by water.

6.4.5.6 Revised TRIGA Fuel Element Characteristics for Nonpoisoned Baskets

The purpose of this section is to demonstrate reactivity results for a revised set of TRIGA fuel element characteristics.

The analysis is broken into three subsections. The first section establishes a minimum number of fuel characteristics meeting criticality safety limits for intact fuel (cask shipments with no cans). The next section evaluates severely damaged TRIGA fuel, including debris, in sealed and screened cans. The last section contains the evaluations for a screened can containing TRIGA elements with potential clad damage, but meeting structural requirements for transport. Unless otherwise indicated, all models represent the accident condition cask (i.e., no neutron shield) in a finite cask array of eight casks.

6.4.5.6.1 Intact Fuel Elements (No Can)

Basic TRIGA fuel element characteristics affecting system reactivity are itemized in the following paragraphs, with a qualitative description as to their effect on system reactivity.

Following the qualitative description are the result discussions of the KENO-Va calculations for the individual parameters.

Enrichment

TRIGA fuel elements are constructed at two basic enrichment levels (20 wt % and 70 wt % ^{235}U).

Fissile Material Mass

Maximum fissile material mass for each enrichment/fuel clad material combination is assigned to the models. Maximum fissile material mass will result in maximum system reactivity.

Zirconium Mass and Hydrogen-to-Zirconium (H/Zr) Ratio

The combination of zirconium mass and the H/Zr ratio determines the quantity of moderator (hydrogen) within the fuel matrix. Previous evaluations indicate that increasing the moderator quantity has the potential to increase system reactivity (i.e., the fuel element itself is under-moderated). Therefore, maximum system reactivity is obtained from a H/Zr ratio of 2.0 (maximum for zirconium hydride) and a maximum fuel zirconium content (limited by the fuel region volume).

Rod Diameter

Modifying rod diameter at a fixed fuel geometry and mass has a small negative effect for stainless steel clad elements, as it increases clad volume (stainless steel is a parasitic absorber). There is no significant effect on aluminum clad fuel. A secondary effect of a rod diameter increase is the separation of the fuel in the dry cavity cask case and reduction in water between elements in the wet cavity cask case. Both result in minor negative reactivity trends.

When allowing the fuel to expand to the clad inner surface, a maximum rod OD allows for additional moderator (in the form of ZrH), which more than offsets the minor reactivity effects discussed previously and, therefore, represents a bounding configuration.

Clad Thickness

Reducing clad thickness removes parasitic absorber for the stainless steel clad fuel element. At a fixed outer diameter, reduced clad thickness provides additional rod interior volume. For a fixed fuel mass, the reactivity effect of a reduced clad thickness is, therefore, limited to the parasitic absorber removal while, at a maximum fuel mass, the reduced thickness clad provides volume for additional ZrH.

Fuel Outer and Inner Diameter

Inner and outer fuel diameters have no effect on system reactivity at a fixed fuel mass. Maximum outer diameter (i.e., contact with the clad) and minimum inner diameter (i.e., contact with the center zirconium rod where applicable) provide for additional ZrH volume and, therefore, represent a bounding configuration.

Central Zirconium Rod Diameter

A change in the diameter of the central zirconium rod at a fixed fuel geometry has no significant system reactivity effect, as it involves neutronically transparent material. A minimum zirconium rod is bounding for the modified fuel dimensions (maximum ZrH).

Active Fuel Length

The reactivity variations associated with the active fuel length have distinctly different trends when considering a system at a fixed (nominal) ZrH quantity and for a system maximizing the ZrH quantity. At a fixed ZrH quantity, the minimum active fuel height compacts the fissile material region (potentially above theoretical density) and, therefore, increases system reactivity. At the maximum ZrH quantity, the effect of a compacted (reduced leakage) fuel region is offset by the reduced moderator ratio in the fuel region, resulting in a slight decrease in reactivity for a dry cask cavity and no statistically resolvable effect for a wet cask cavity (bounding for the finite array of casks modeled). Therefore, active fuel length variations have no significant effects on the highest system reactivity cases containing maximum ZrH.

Zirconium Content and H/Zr Ratio

The effect of zirconium mass changes at a fixed H/Zr ratio of 1.6 is illustrated in Figure 6.4.5-1 for a finite cask array of eight casks. Similar reactivity changes as a function of H/Zr ratio are shown in Figure 6.4.5-2. Both figures clearly demonstrate that maximum zirconium quantity and H/Zr ratio are bounding for the system. Analysis trends hold true for both wet and dry cask cavity cases. Note that the 20% enriched material curve indicates a higher reactivity than the 70% enriched curve for the H/Zr ratio study (dry cask cavity). This is the result of specifying an artificially high zirconium content of the fuel material. The composition for the 20 wt % rod with 2,300 grams of zirconium in the fuel results in a ZrH_x density of approximately 6.9 g/cm^3, well above the actual density of 5.61 g/cm3. The 2,300 grams base value is obtained from a fuel element with only 41 grams of ^{235}U versus 167 grams in the design basis element. Figure 6.4.5-3 demonstrates that a maximum fissile material content is bounding for fuel containing the maximum ZrH content feasible at a maximum H/Zr ratio of 2.0.

At the maximum ZrH quantity possible in the fuel rod, the 70 wt % case is bounding as demonstrated in Table 6.4.5-20 and discussed later in this section.

Maximum Reactivity Fuel Element Configuration

Fuel assembly characteristics are evaluated by allowing:

- Rod diameter to reach a maximum of 1.5 inches
- Clad to be reduced to 0.0001 cm (essentially a no clad case, allowing the basic KENO cells to be retained within the input file structure)
- Fuel outer diameter to be maximized into contact with the clad inner surface and be minimized by 0.1 inch (arbitrary value chosen for study purposes)
- Fuel inner diameter to be minimized into contact with the zirconium center rod (no maximum was evaluated as analysis trends all indicate a reduced fuel volume to be bounding)
- Zirconium inner rod to be reduced (minimum) to a 0.0001 cm radius (essentially a "no inner rod" case with the KENO cell for the rod retained) or increased (maximum) to contact the fuel inner diameter
- Active fuel length to be varied by 0.5 inch

As shown in Table 6.4.5-17, maximum system reactivity is achieved for a fuel element with the following characteristics:

- Maximum zirconium content

  Calculated based on the physical dimensions of the fuel region and zirconium hydride at full density (occupying all nonuranium volume)

- Maximum H/Zr atom ratio (2.0)

  Based on the H/Zr ratio study in the previous section having determined a maximum H/Zr ratio to be bounding for wet and dry cask configurations, all fuel element physical characteristic studies applied the maximum ratio of 2.0.

- Maximum rod outer diameter of 1.5 inches

  Fixed fuel mass cases show a slight decrease in reactivity due to the additional clad volume (stainless steel) associated with a larger fuel rod at a constant clad thickness. When considering increased fuel diameter and the associated increase in volume for zirconium hydride, a maximum rod diameter is bounding.

- Minimum clad thickness

Provides a significant increase in reactivity as the result of reduced parasitic absorber and increased volume for the fuel. Note that bias adjusted reactivities for a 0.0001 cm clad case

exceed a 0.95 limit. Further evaluations documented in Table 6.4.5-18 indicate a model containing a 0.01 inch clad is sufficient to demonstrate reactivity below the 0.95 limit. This model change is adopted for the screened and sealed can evaluations.

- Maximum fuel outer diameter, minimum inner diameter and a minimum (removed) central rod

  All three properties increase the potential fuel volume and, therefore, provide additional ZrH volume.

- No significant reactivity effect of fuel length for the bounding (wet) fuel configurations

  The maximum active fuel length is specified to be a bounding configuration as it provides the largest amount of integral fuel moderator (ZrH_x) to the system.

Optimum Moderation, Fuel Element Location and Basket Manufacturing Tolerances

Reference criticality calculations for TRIGA fuel in either an infinite basket cell or infinite cask array configuration indicate that maximum system reactivity is obtained from a dry cask cavity with fuel elements shifted toward the basket center in a minimum opening size basket. Finite cask array calculations on the fuel parameters evaluated herein indicate that this configuration is not bounding for a finite cask array. Water in the model not only thermalizes neutrons to support reactions with the fissile material, but also absorbs neutrons. Since the TRIGA elements contain moderator in the fuel matrix, independent of the water in the element-to-basket gaps, an infinite array of casks provides significant neutronic interactions on a dry cask basis. In the finite array models, the additional neutrons supplied by other casks are significantly reduced, resulting in a system with a water cavity being bounding.

A sample evaluation of reactivity trends as a function of model configuration is shown in Table 6.4.5-19. The data demonstrate a sharp drop-off in reactivity as the number of fuel units is reduced (infinite basket unit cell to finite cask model, to finite cask array, and finally to a single cask model) for a dry cask, while reactivity for a wet cask remains relatively constant across array sizes. Initial reactivity studies for the 70 wt % enriched steel clad fuel at various moderator quantities (accomplished by varying fuel zirconium quantity at a fixed H/Zr ratio) confirm that system reactivity increases with increased moderator density, but levels off at densities above 0.5 g/cm3 (see Figure 6.4.5-4). At this level, increased moderation between elements in a basket opening is offset by reduced interaction between the basket opening, baskets in the cask, and casks in the array. Detailed moderator density studies for the system considering various fuel element moderator quantities (adjusted by H/Zr ratio), TRIGA element configuration (nominal and most reactive element), rod locations (shifted in – optimal for dry system; shifted to basket

corners – optimal for wet system), and basket opening size (minimum and maximum) are illustrated in Figure 6.4.5-5. These studies demonstrate that maximum reactivity is the result of:

- Fully moderated cask cavity (water density 1 g/cm^3)
- Most reactive element configuration defined in the previous section
- Shifted out (to basket corners) fuel elements

No significant changes in reactivity occurred as the result of basket opening size changes for a fully flooded (maximum reactivity) basket configuration.

Maximum Intact Fuel Reactivity and Criticality Safety Index

Based on a 1.5-inch maximum rod diameter, a minimum clad thickness of 0.01 inch, a conservatively removed central zirconium rod, and a maximum ZrH content system, reactivities are calculated for each of the primary TRIGA fuel types. Results for the analyses are listed in Table 6.4.5-20. Maximum bias adjusted reactivity (k_s) for the revised TRIGA fuel description is 0.94842 (k_{eff} = 0.93024 ± 0.00069) under accident conditions with a cask array limited to eight casks (CSI = 12.5). Table 6.4.5-4 also illustrates the large reactivity increase associated with the move from a nominal fuel element to the bounding configuration specified here.

The normal condition (intact neutron shield) maximum reactivity for the system is shown in Table 6.4.5-21 for an infinite cask array. Therefore, the CSI for intact fuel shipments is 12.5.

6.4.5.6.2 Screened and Sealed Can Criticality Evaluations for Severely Damaged Fuel (Up to Two Elements per Can)

The NAC-LWT system may be loaded with screened or sealed cans in the top and bottom basket modules. The sealed can was previously evaluated for a damaged content of up to two equivalent intact rods. Based on an accident cask condition (i.e., no neutron shield), reactivity evaluations for a finite array of eight casks are repeated in this section for the revised TRIGA fuel element definition. In addition, the screened can is similarly evaluated to contain up to two equivalent intact rods.

Screened and sealed can reactivity evaluations are performed at various cask cavity and can moderator combinations for a solid fuel material and for a fuel mixture filling the can cavity. The results plotted in Figure 6.4.5-6 demonstrate that the reactivity of the system is controlled by the uncanned baskets with no significant feedback from the can locations regardless of can fuel height or moderator fraction. Note that the can contents are limited to the equivalent of two fuel elements, while uncanned basket locations contain up to four rods. Similar results are obtained from a study of debris height at various can moderator densities as shown in Figure 6.4.5-7. The study demonstrates no statistically significant effect of debris height on system reactivity.

Maximum system reactivity was calculated at a k_{eff} of 0.93159 ± 0.00066 for a k_s of 0.94971 after adjusting for a calculation bias uncertainty of 0.0168 (code bias is an approximately 0.02 Δk over-prediction and is, therefore, set to 0 for the bias adjusted reactivity). This reactivity is not statistically different from that of the intact fuel. As an eight-cask array was modeled under accident conditions, the system CSI is 12.5.

Maximum normal condition reactivity for an infinite array of casks containing cans with up to two TRIGA elements worth of fuel material is 0.92351 ± 0.00071 (wet cask and can).

The overall system CSI for casks containing cans with up to four fuel elements per can, including fuel debris, is 12.5.

6.4.5.6.3 Screened Can Criticality Evaluations (Four Elements per Can – Elements Retaining Structural Integrity)

The NAC-LWT system may be loaded with screened cans in the top and bottom basket modules. The screened can was previously evaluated for a content of up to four intact TRIGA elements. Based on an accident cask condition (i.e., no neutron shield), reactivity evaluations for a finite array of casks are repeated in this section for the revised TRIGA fuel element definition.

Reactivity evaluations are performed at various cask cavity and can moderator combinations for four elements per can in an eight-cask array. The results plotted in Figure 6.4.5-8 demonstrate that the maximum reactivity is achieved by a dry cask cavity with a full density, preferentially flooded can. Bias adjusted reactivity for this system is slightly above 0.95. Evaluations are, therefore, repeated for a four-cask array (CSI = 25) with the corresponding results added to the Figure 6.4.5-8 plot. Maximum system reactivity for the four-cask array is k_{eff} of 0.92798 ± 0.00070 for a k_s of 0.94618. Moderator condition for the maximum reactivity case is a wet (1 g/cm^3) cask and wet can at 0.4 g/cm^3 moderator density (note that there is no statistically significant change in system reactivity as a function of can cavity moderator density).

Maximum normal condition reactivity for an infinite array of casks containing the screened cans with four TRIGA elements is 0.92484 ± 0.00068 (wet cask/wet can).

The overall system CSI for casks containing cans with up to four fuel elements per can, including fuel debris, is 25.

6.4.5.6.4 Revised Fuel Parameter Reactivity Summary

The reactivity evaluation of the NAC-LWT cask containing up to 120 TRIGA elements demonstrates that subcritical margin ($k_s \leq 0.95$) can be maintained under the following condition:

Parameter	Value
Maximum Number of Elements per Basket Openings	4
Fuel Material	U-ZrH_x
Rod Diameter	≤ 1.5 inches
Clad Thickness	≥ 0.01 inch
^{235}U Content per Element	≤ 41g (20% enriched fuel – Al Clad)
	≤ 137g (20% enriched fuel – SS Clad)
	≤ 169g (70% enriched fuel – SS Clad)
Maximum Reactivity (k_s)	0.949

Due to limitations on the array size for accident conditions, the criticality safety index (CSI) for the package is 12.5 for loading of intact fuel and screened and sealed cans containing up to two fuel elements (in any condition, including severely damaged fuel and debris). Screened cans containing up to four elements are permitted with a CSI of 25. The four elements in the screened can may contain clad damage provided the elements maintain structural integrity through normal and accident conditions.

6.4.5.7 Conclusion

Thus, including all calculational and mechanical uncertainties, an infinite array of NAC-LWT casks remains sub-critical, and is below the 0.95 limit, corrected for bias and uncertainty, under normal and accident conditions with:

Nonpoisoned Baskets:

1. 120 TRIGA fuel elements,
2. Sealed and screened cans (top and bottom baskets only) with two damaged TRIGA fuel elements or fuel debris equivalent to two elements.

Poisoned Baskets:

1. 140 TRIGA fuel elements,
2. Sealed cans (top and bottom baskets only) with two damaged TRIGA fuel elements or fuel debris equivalent to two elements.

Figure 6.4.5-1 Finite Cask Array Reactivity versus Fuel Zirconium Mass (Dry Cask Cavity)

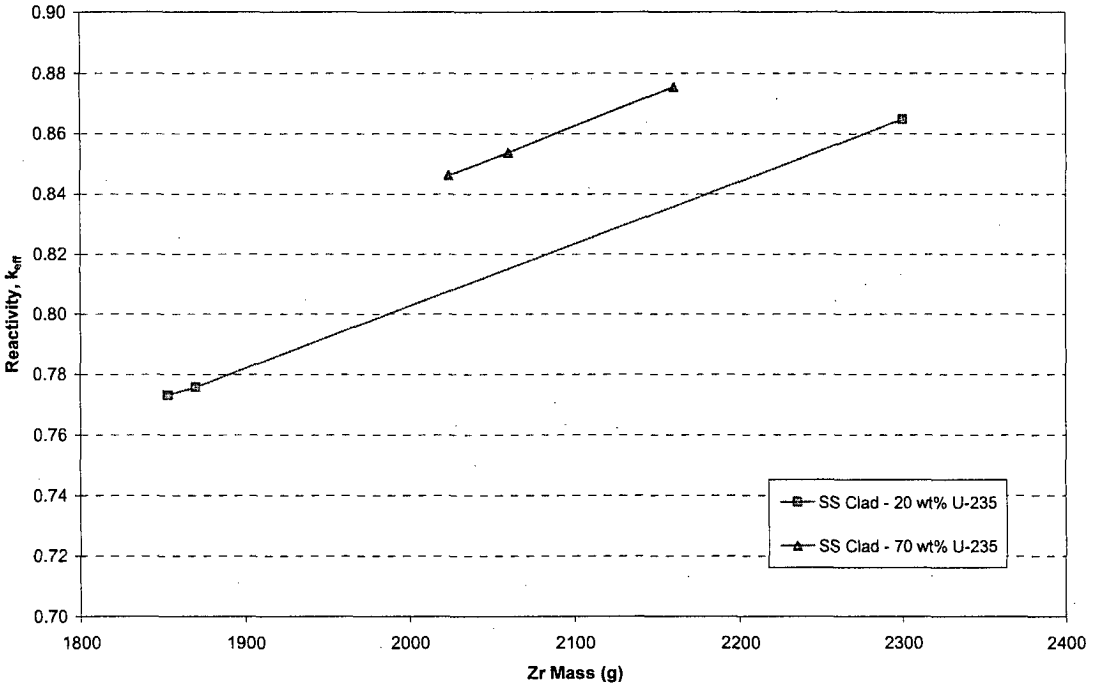

Figure 6.4.5-2 Finite Cask Array Reactivity versus H/Zr Ratio (Dry Cask Cavity)

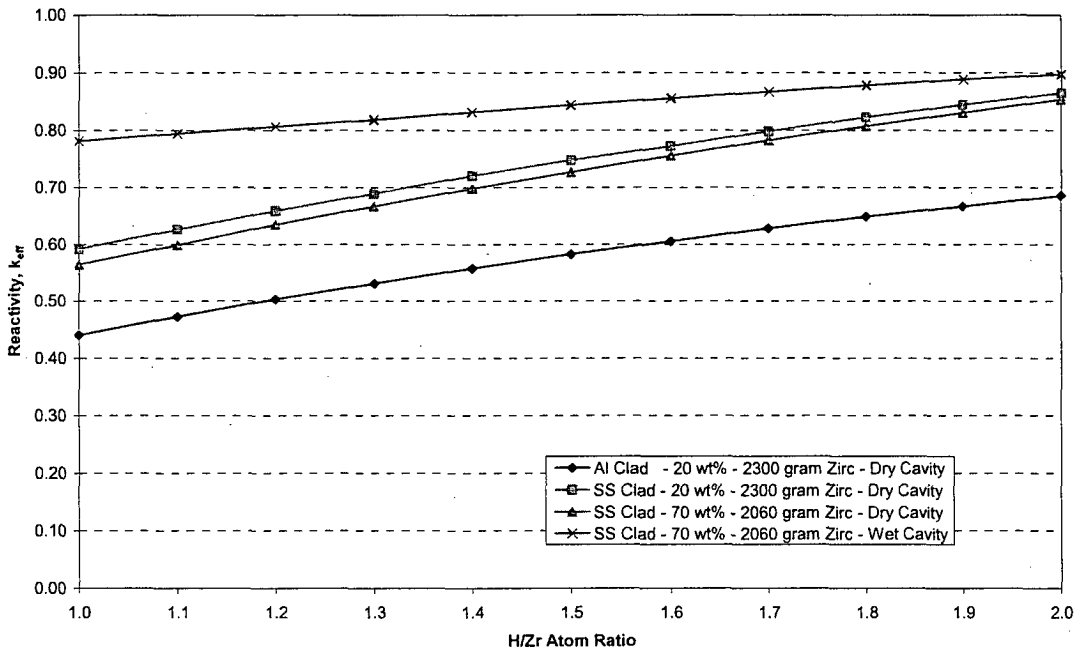

Figure 6.4.5-3 Finite Cask Array Reactivity versus Fuel Mass (Study of ZrH Displacement of Fissile Material for a Fixed Fuel Geometry)

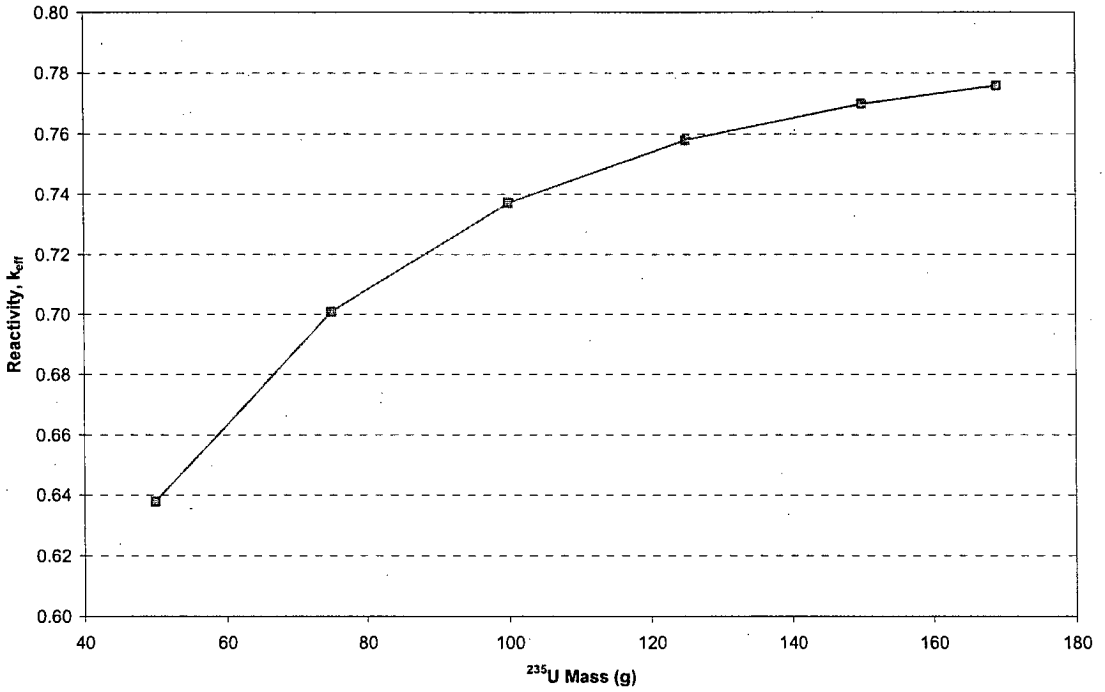

Figure 6.4.5-4 Intact Fuel Optimum Moderator Study – 70 wt % ^{235}U Various Zirconium Masses

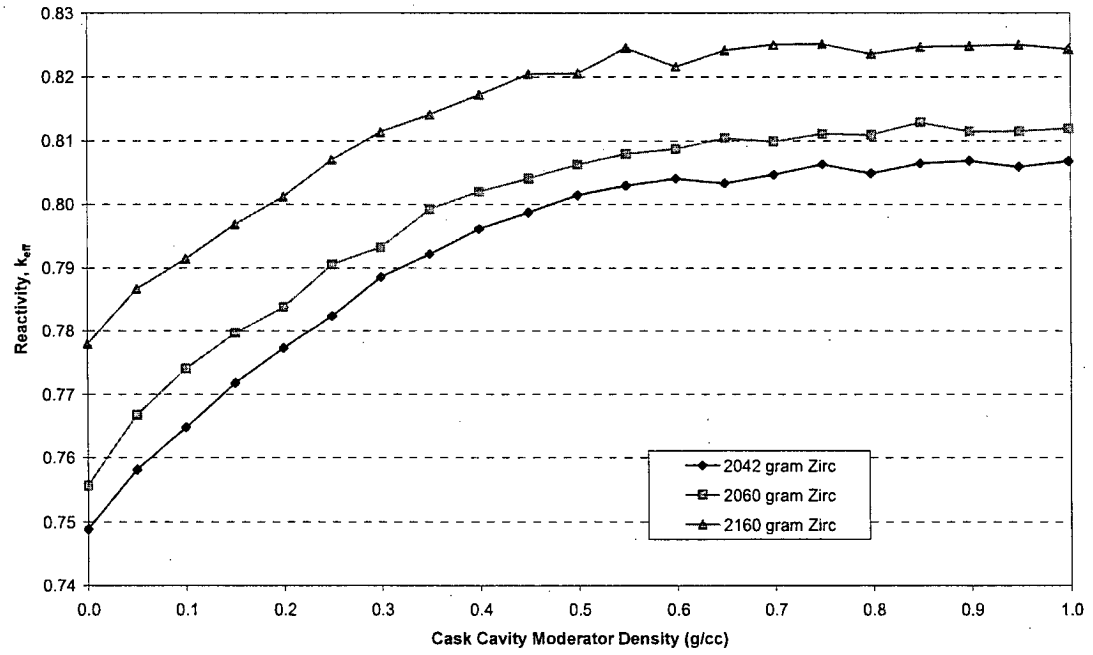

Figure 6.4.5-5 Detailed Intact Fuel Optimum Moderator Study – H/Zr Ratio, Fuel Element Characteristics and Location Varied

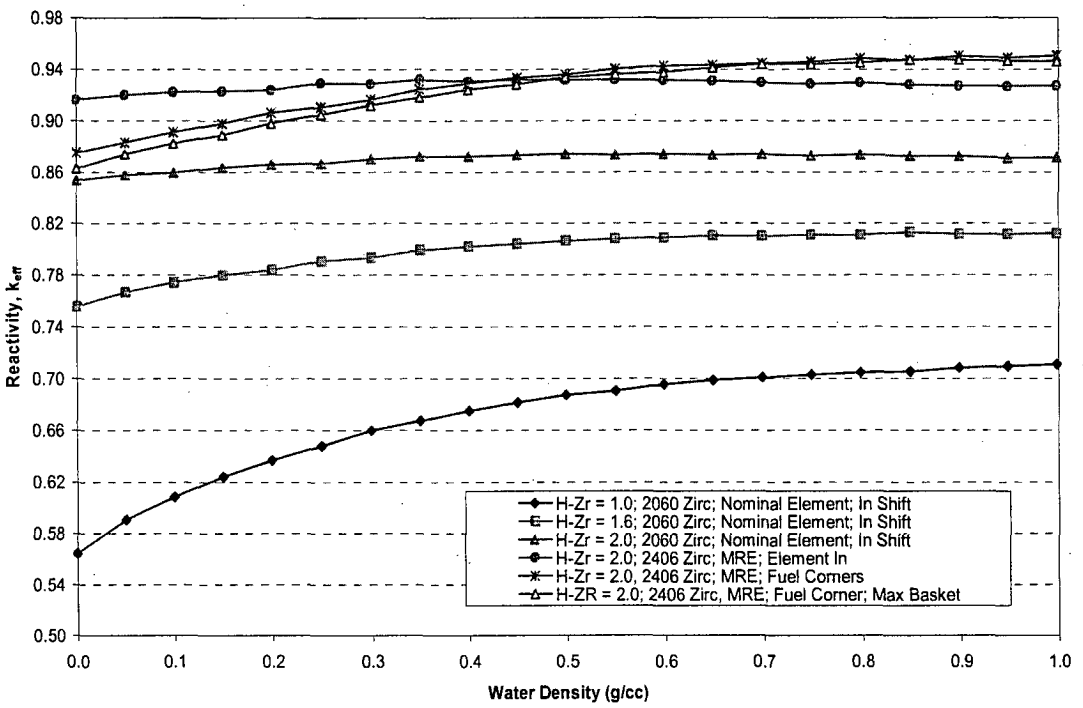

Figure 6.4.5-6 Screened and Sealed Can Optimum Moderator Study – Maximum Reactivity Fuel Configuration – 70 wt% ^{235}U Steel Clad

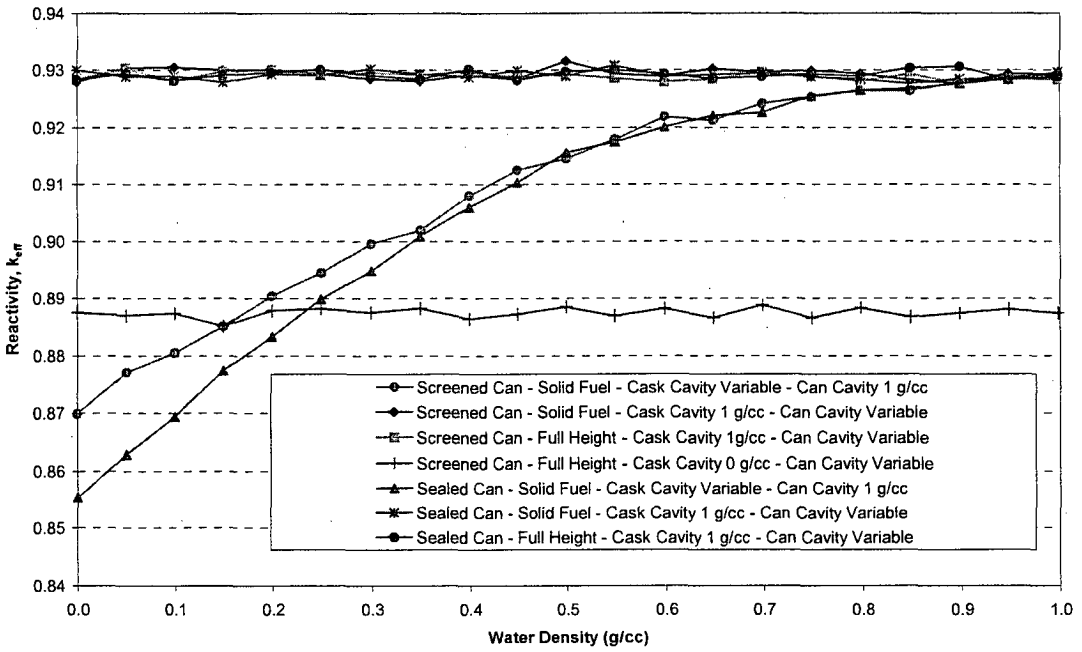

Figure 6.4.5-7 Screened and Sealed Can Debris Height Study – Maximum Reactivity Fuel Configuration – 70 wt% ^{235}U Steel Clad

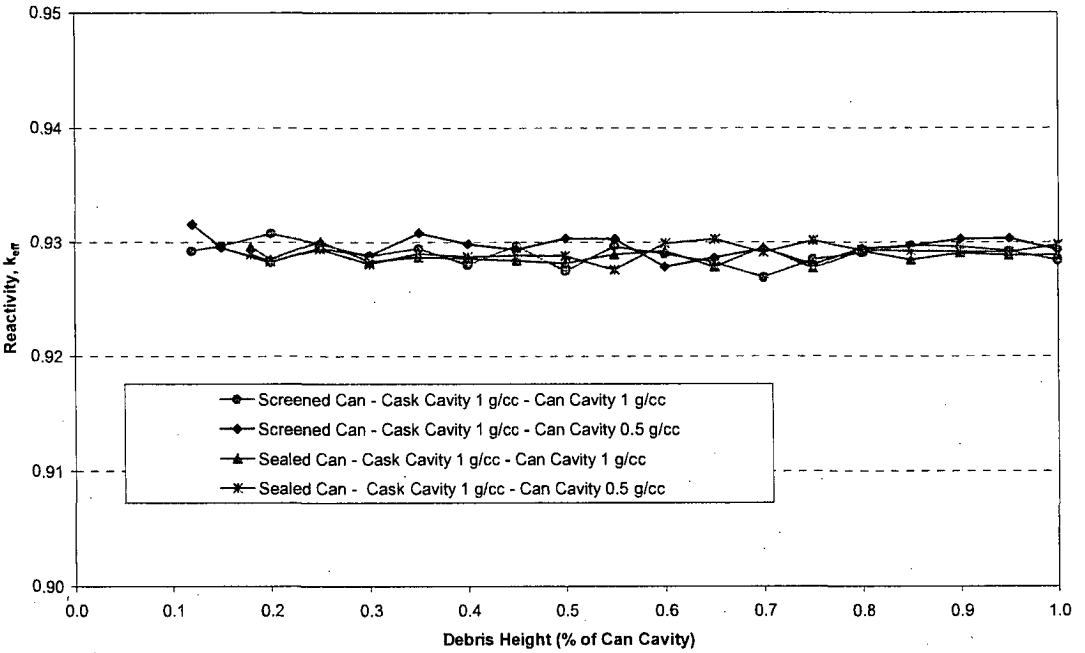

Figure 6.4.5-8 Screened Can – 4 Elements per Can – Maximum Reactivity Fuel Configuration – 70 wt% ^{235}U Steel Clad

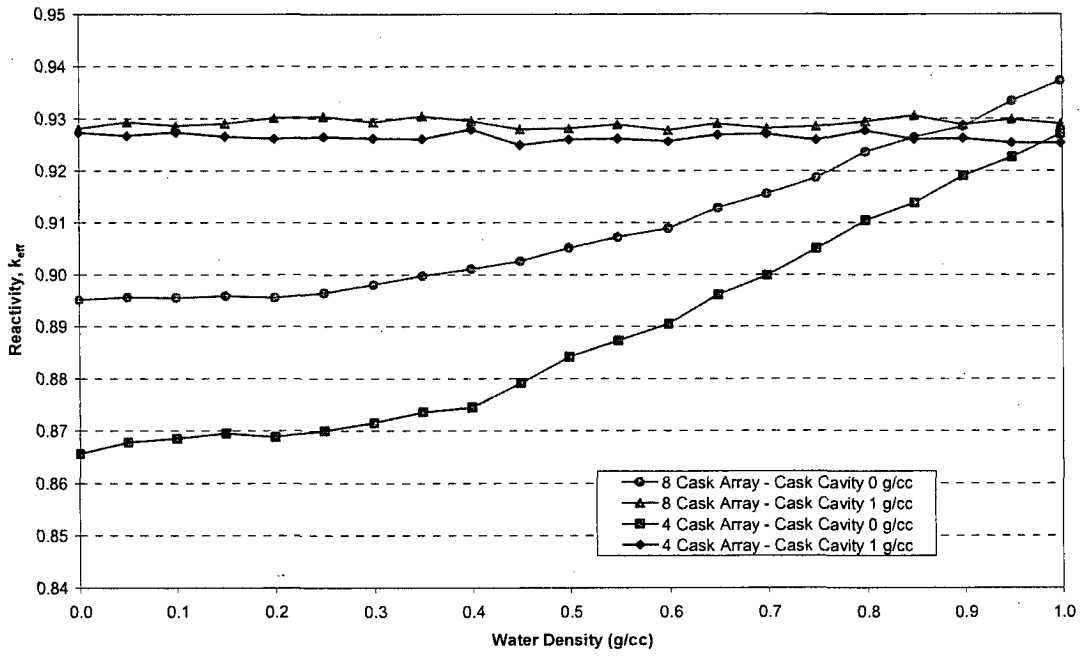

Table 6.4.5-1 Parametric Study – Fuel / Basket k-infinity versus TRIGA Fuel Element Type, Nonpoisoned Basket

(Infinite Array of Nonpoisoned TRIGA Basket Cells with Four (4) Elements)

Fuel Element Type	Initial U Content wt%	Total U grams	^{235}U wt%	Wet Case Results K(infinity) ± σ	Dry Case Results k(infinity) ± σ
Original Al Clad 14 inch Active Fuel	8-8.5	205	20.0	1.01740 ± 0.00081	1.04129 ± 0.00066
Original Al Clad 15 inch Active Fuel	8-8.5	205	20.0	1.00636 ± 0.00081	1.02634 ± 0.00065
Stand. Streamlined Steel Clad 15 inch Active Fuel (FLIP)	8.5	196	70.0	1.33900 ± 0.00094	1.43012 ± 0.00078
Stand. Plain Steel Clad 15 Active Fuel (FLIP)	8.5	196	70.0	1.33969 ± 0.00097	1.43009 ± 0.00077
Stand. Streamlined Steel Clad FLIP-LEU-II	30.6	845	20.0	1.28517 ± 0.00087	1.31180 ± 0.00073
Stand. Plain Steel Clad FLIP-LEU-II	30.6	845	20.0	1.28512 ± 0.00088	1.31198 ± 0.00072
FFCR Element FLIP-LEU-I	20.0	484	20.0	1.16407 ± 0.00086	1.23186 ± 0.00071
1-70 wt% ^{235}U + 3-20 wt% ^{235}U	--	--	--	1.30429 ± 0.00091	1.34060 ± 0.00071
3-70 wt% ^{235}U + 1-20 wt% ^{235}U	--	--	--	1.32896 ± 0.00092	1.40083 ± 0.00077
2-70 wt% ^{235}U + 2-20 wt% ^{235}U	--	--	--	1.31601 ± 0.00094	1.37156 ± 0.00076

LEU Low Enriched Uranium
FLIP Fuel Life Improvement Program
FFCR Fuel Follower Control Rod

* Resonance treatment for two different fuel types is included.

Table 6.4.5-2 Parametric Study – Cask k_{eff} versus TRIGA Fuel Element Type, Poisoned Basket

Fuel Element Type	Initial U Content wt%	Total U grams	^{235}U wt%	Wet Case Results $k_{eff} \pm \sigma$	Dry Case Results $K_{eff} \pm \sigma$
Original Al Clad 15 inch Active Fuel	8-8.5	205	20.0	0.58906 ± 0.00097	0.47118 ± 0.00076
Stand. Streamlined Steel Clad 15 inch Active Fuel (FLIP)	8.5	196	70.0	0.86504 ± 0.00134	0.85705 ± 0.00112
Stand. Plain Steel Clad 15 Active Fuel (FLIP)	8.5	196	70.0	0.86647 ± 0.00137	0.86610 ± 0.00115
Stand. Streamlined Steel Clad FLIP-LEU-II	30.6	845	20.0	0.83413 ± 0.00130	0.80073 ± 0.00103
Stand. Plain Steel Clad FLIP-LEU-II	30.6	845	20.0	0.83604 ± 0.00127	0.80492 ± 0.00099
1-70 wt% ^{235}U + 3-20 wt% ^{235}U	--	--	--	0.84391 ± 0.00133	0.81589 ± 0.00101
3-70 wt% ^{235}U + 1-20 wt% ^{235}U	--	--	--	0.85826 ± 0.00131	0.84917 ± 0.00108
2-70 wt% ^{235}U + 2-20 wt% ^{235}U	--	--	--	0.85162 ± 0.00129	0.83177 ± 0.00103

Table 6.4.5-3 Axially Infinite Cask k_{eff} with TRIGA Fuel Elements- Fuel Element Placement Perturbations, Nonpoisoned Basket

Basket Configuration	Wet Case Results $k_{eff} \pm \sigma$	Dry Case Results $k_{eff} \pm \sigma$
Elements Touching, Moved In	-	0.93434 ± 0.00115
Elements Touching, Centered	0.77382 ± 0.00109	0.92672 ± 0.00185
Elements Out	0.83468 ± 0.00101	0.90817 ± 0.00105
Elements Centered, Quadrants	0.81340 ± 0.00107	-
Three - 70 wt% ^{235}U Elements (Equilateral)	0.83646 ± 0.00112	-
Three - 70 wt% ^{235}U Elements (in corner)	0.83579 ± 0.00101	0.80629 ± 0.00110
Three - 70 wt% ^{235}U Elements (Isosceles)	0.83468 ± 0.00101	-
Two - 70 wt% ^{235}U Elements (Center)	0.67480 ± 0.00097	0.63503 ± 0.00108
One - 70 wt% ^{235}U Elements (Center)	0.44428 ± 0.00091	-

Table 6.4.5-4 Axially Infinite Cask k_{eff} with TRIGA Fuel Elements - Fuel Element Placement Perturbations, Poisoned Basket

Basket Configuration	Wet Case Results $k_{eff} \pm \sigma$	Dry Case Results $k_{eff} \pm \sigma$
Elements Touching, Moved In	-	0.88969 ± 0.00122
Elements Touching, Centered	0.82705 ± 0.00136	0.87833 ± 0.00122
Elements Touching, Moved Out	-	0.87871 ± 0.00112
Elements Centered, Quadrants	0.86647 ± 0.00134	0.86610 ± 0.00115
Elements Out	0.87874 ± 0.00123	0.85348 ± 0.00114
27 Elements, Touching	0.85014 ± 0.00131	0.66829 ± 0.00114
27 Elements, Corners	0.84686 ± 0.00124	-
26 Elements, Touching	0.82959 ± 0.00124	0.64354 ± 0.00117
26 Elements, Corners	0.81959 ± 0.00126	-
21 Elements, Touching	0.70693 ± 0.00127	0.55021 ± 0.00110
21 Elements, Corners	0.73134 ± 0.00133	-
14 Elements, Touching	0.58154 ± 0.00136	0.39354 ± 0.00097
14 Elements, Corners	0.55112 ± 0.00117	-

Table 6.4.5-5 Axially Infinite Cask k_{eff} with TRIGA Fuel Elements – Basket Manufacturing Tolerance Perturbations, Nonpoisoned Basket

Basket Configuration	Wet Case Results w/ Dry Neutron Shield $k_{eff} \pm \sigma$	Dry Case Results $k_{eff} \pm \sigma$
Base Case[1]	0.86190 ± 0.00089[3]	0.90053 ± 0.00115[4]
Thin SS Plates	0.86861 ± 0.00094	0.90501 ± 0.00109
Maximum Basket Opening[2]	0.86864 ± 0.00097	0.90023 ± 0.00107
Minimum Basket Opening[2]	0.86489 ± 0.00091	0.90817 ± 0.00105

Notes:

1. Both wet and dry base case configurations include elements out to corners of basket openings.
2. Incorporates minimum thickness stainless steel, basket divider plates.
3. Comparable to the "elements out," $k_{eff} = 0.83468 \pm 0.00101$, configuration of Table 6.4.5-3 except the neutron shield is dry.
4. Incorporates the "elements out" configuration.

Table 6.4.5-6 Axially Infinite Cask k_{eff} with TRIGA Fuel Elements – Basket Manufacturing Tolerance Perturbations, Poisoned Basket

Basket Configuration	Wet Case Results $k_{eff} \pm \sigma$	Dry Case Results $k_{eff} \pm \sigma$
Base Case[1]	0.87874 ± 0.00123	0.88969 ± 0.00122
Minimum Opening[2]	0.87832 ± 0.00127	0.89054 ± 0.00107
Increased Central Opening[2]	0.87981 ± 0.00133	0.88722 ± 0.00118
Increased Exterior Openings[2]	0.87875 ± 0.00134	0.88998 ± 0.00120
Increased Central Opening, Decreased Exterior Openings[2]	0.87475 ± 0.00134	0.88724 ± 0.00116

Notes:

1. Most reactive configurations from Table 6.4.5-4.
2. Incorporates minimum thickness stainless steel, basket divider plates.

Table 6.4.5-7 Screened Can Preferential Flooding and Partial Loading Reactivity Evaluations for TRIGA Fuel Elements, Nonpoisoned and Poisoned Baskets

Description	$k_{eff} \pm \sigma$ Nonpoisoned Basket	$k_{eff} \pm \sigma$ Poisoned Basket
Wet Cask / Wet Can	0.84040 ± 0.00132	0.88010 ± 0.00139
Dry Cask / Dry Can	0.89383 ± 0.00120	0.86228 ± 0.00128
Dry Cask / Wet Can – Elements To Center of Cask	0.89778 ± 0.00124	0.88272 ± 0.00124
Dry Cask / Wet Can – Elements To Center of Can	0.89435 ± 0.00124	0.87727 ± 0.00124
Dry Cask / Wet Can – Elements Quadrant Centered	0.89821 ± 0.00129	0.88737 ± 0.00123
Dry Cask / Wet Can – Elements in Corners	0.90926 ± 0.00126	0.89957 ± 0.00118
Dry Cask / Wet Can – Elements in Corners, Max. Can	0.90673 ± 0.00123	0.90224 ± 0.00128
18 Elements per Basket Module	0.84896 ± 0.00121	0.82527 ± 0.00114
12 Elements per Basket Module	0.82532 ± 0.00125	0.80281 ± 0.00119

Table 6.4.5-8 Sealed Can Preferential Flooding and Partial Loading Reactivity Evaluations for TRIGA Fuel Elements, Nonpoisoned and Poisoned Baskets

Description	$k_{eff} \pm \sigma$ Nonpoisoned Basket	$k_{eff} \pm \sigma$ Poisoned Basket
Wet Cask / Wet Can, Elements Out	-	0.88574 ± 0.00130
Wet Cask / Wet Can	0.84331 ± 0.00129	0.88036 ± 0.00125
Dry Cask / Dry Can	0.85693 ± 0.00121	0.83021 ± 0.00118
Dry Cask / Wet Can	0.84376 ± 0.00129	0.78084 ± 0.00114
2 Rods per Can - 3 Five Inch Fuel Pellets	0.84346 ± 0.00128	0.88212 ± 0.00133
Mixture Solid (No Moderator)- 2 Rods Per Can	0.87512 ± 0.00122	0.88371 ± 0.00125
Mixture Half Can Height - 2 Rods Per Can	0.90691 ± 0.00212	0.88564 ± 0.00146
Mixture Full Can Height - 2 Rods Per Can	0.91088 ± 0.00106	0.88411 ± 0.00129
Mixture - Solid (No Moderator) - 1 Rod Per Can	0.85868 ± 0.00132	0.88472 ± 0.00131
Mixture - Half Can Height - 1 Rod Per Can	0.87411 ± 0.00117	0.88204 ± 0.00130
Mixture - Full Can Height - 1 Rod Per Can	0.85913 ± 0.00117	0.88477 ± 0.00142
2 Rods Per Can + Graphite – Solid	0.87208 ± 0.00117	0.88616 ± 0.00138
2 Rods Per Can + Graphite – Full Can Height	0.89867 ± 0.00118	0.88431 ± 0.00129
Increased Can Diameter (+0.02 inch)[1]	0.91355 ± 0.00119	0.88436 ± 0.00138

Note:

1. The increased can diameter cases were analyzed using the most reactive cases for each basket configuration (nonpoisoned / poisoned). The "Wet Cask / Wet Can, Elements Out" case was selected for the poisoned basket configuration due to the lack of statistically significant differences in the above reported results.

Table 6.4.5-9 Summary of Most Reactive Configurations, TRIGA Fuel Elements, Nonpoisoned Basket

	Wet	Dry	Preferential
Intact Fuel	0.86861 ± 0.00094	0.93434 ± 0.00115 [1]	-
Screened Fuel Cans	0.84040 ± 0.00132	0.89383 ± 0.00120	0.90926 ± 0.00126
Sealed Fuel Cans	0.84331 ± 0.00129	0.85693 ± 0.00121	0.91355 ± 0.00199

Note:

1. As reported in Section 6.4.5.4, this case is reevaluated with a finite axial length model, making the preferentially flooded, sealed can case the most reactive.

Table 6.4.5-10 Summary of Most Reactive Configurations, TRIGA Fuel Elements, Poisoned Basket

	Wet	Dry	Preferential
Intact Fuel	0.87874 ± 0.00123	0.88969 ± 0.00122	-
Screened Fuel Cans	0.88010 ± 0.00139	0.86228 ± 0.00128	0.90224 ± 0.00128
Sealed Fuel Cans	0.88574 ± 0.00130	0.83021 ± 0.00118	0.88564 ± 0.00146

Table 6.4.5-11 Reactivity Results for TRIGA Fuel Elements, Sealed Cans, Normal Conditions, Nonpoisoned Basket

Moderator SG	Casks Touching ($k_{eff} \pm \sigma$)	8 Foot Center-To-Center ($k_{eff} \pm \sigma$)
Dry Exterior, Vary Internal Density		
0.00000	0.7239 ± 0.0012	0.7203 ± 0.0012
0.00100	0.7205 ± 0.0012	0.7212 ± 0.0012
0.00178	0.7231 ± 0.0013	0.7201 ± 0.0012
0.00316	0.7216 ± 0.0012	0.7202 ± 0.0012
0.00562	0.7227 ± 0.0012	0.7181 ± 0.0012
0.01000	0.7234 ± 0.0012	0.7224 ± 0.0012
0.01780	0.7205 ± 0.0012	0.7223 ± 0.0013
0.03160	0.7249 ± 0.0012	0.7242 ± 0.0012
0.05620	0.7263 ± 0.0012	0.7285 ± 0.0012
0.10000	0.7295 ± 0.0012	0.7303 ± 0.0012
0.17800	0.7446 ± 0.0012	0.7415 ± 0.0012
0.31600	0.7674 ± 0.0012	0.7647 ± 0.0013
0.56200	0.7887 ± 0.0013	0.7884 ± 0.0013
0.70000	0.7977 ± 0.0014	0.7961 ± 0.0014
0.80000	0.8009 ± 0.0013	0.7974 ± 0.0013
0.90000	0.8000 ± 0.0013	0.8008 ± 0.0012
1.00000	0.8020 ± 0.0013	0.8022 ± 0.0014
Optimally Moderated Cask Interior (SG = 1.0), Vary External Density		
0.00000	0.8020 ± 0.0013	0.8022 ± 0.0013
0.00100	0.8013 ± 0.0014	0.8010 ± 0.0013
0.00178	0.7993 ± 0.0014	0.8003 ± 0.0013
0.00316	0.8017 ± 0.0014	0.8024 ± 0.0013
0.00562	0.8041 ± 0.0014	0.8002 ± 0.0013
0.01000	0.8018 ± 0.0013	0.8032 ± 0.0013
0.01780	0.8025 ± 0.0013	0.8018 ± 0.0013
0.03160	0.8001 ± 0.0013	0.8023 ± 0.0013
0.05620	0.8004 ± 0.0014	0.7993 ± 0.0013
0.10000	0.8008 ± 0.0012	0.8000 ± 0.0013
0.17800	0.8018 ± 0.0014	0.8019 ± 0.0013
0.31600	0.8034 ± 0.0014	0.8019 ± 0.0013
0.56200	0.7996 ± 0.0013	0.8025 ± 0.0013
0.70000	0.8018 ± 0.0014	0.8026 ± 0.0014
0.80000	0.8013 ± 0.0013	0.8009 ± 0.0013
0.90000	0.7998 ± 0.0013	0.8009 ± 0.0012
1.00000	0.8019 ± 0.0015	0.8003 ± 0.0013
Vary Internal and External Density Simultaneously		
0.00000	0.7239 ± 0.0012	0.7203 ± 0.0013
0.00100	0.7212 ± 0.0012	0.7192 ± 0.0012
0.00178	0.7210 ± 0.0011	0.7236 ± 0.0012
0.00316	0.7202 ± 0.0012	0.7217 ± 0.0012
0.00562	0.7225 ± 0.0012	0.7218 ± 0.0012
0.01000	0.7229 ± 0.0012	0.7236 ± 0.0012
0.01780	0.7230 ± 0.0012	0.7239 ± 0.0012
0.03160	0.7253 ± 0.0013	0.7236 ± 0.0012
0.05620	0.7273 ± 0.0012	0.7261 ± 0.0013
0.10000	0.7311 ± 0.0012	0.7296 ± 0.0013
0.17800	0.7439 ± 0.0013	0.7429 ± 0.0012
0.31600	0.7634 ± 0.0013	0.7650 ± 0.0013
0.56200	0.7882 ± 0.0014	0.7898 ± 0.0013
0.70000	0.7950 ± 0.0014	0.7941 ± 0.0012
0.80000	0.7950 ± 0.0013	0.7973 ± 0.0013
0.90000	0.7984 ± 0.0012	0.8002 ± 0.0012
1.00000	0.8000 ± 0.0013	0.8029 ± 0.0014

Table 6.4.5-12 Reactivity Results for TRIGA Fuel Elements, Sealed Cans, Accident Conditions, Nonpoisoned Basket

Moderator SG	Casks Touching ($k_{eff} \pm \sigma$)	8 Foot Center-To-Center ($k_{eff} \pm \sigma$)
Dry Exterior and Neutron Shield, Vary Internal Moderator		
0.00000	0.9136 ± 0.0012	0.9057 ± 0.0011
0.00100	0.9119 + 0.0012	0.9054 + 0.0011
0.00178	0.9101 + 0.0012	0.9041 + 0.0011
0.00316	0.9110 + 0.0011	0.9040 + 0.0011
0.00562	0.9095 + 0.0012	0.9046 + 0.0011
0.01000	0.9059 + 0.0012	0.8999 + 0.0012
0.01780	0.9021 + 0.0012	0.8979 + 0.0012
0.03160	0.8965 + 0.0012	0.8908 + 0.0011
0.05620	0.8842 + 0.0013	0.8793 + 0.0012
0.10000	0.8660 + 0.0012	0.8622 + 0.0012
0.17800	0.8432 + 0.0012	0.8419 + 0.0012
0.31600	0.8275 + 0.0013	0.8222 + 0.0012
0.56200	0.8185 + 0.0013	0.8153 + 0.0014
0.70000	0.8144 + 0.0013	0.8124 + 0.0013
0.80000	0.8140 + 0.0013	0.8091 + 0.0013
0.90000	0.8154 + 0.0012	0.8082 + 0.0013
1.00000	0.8117 + 0.0013	0.8081 + 0.0013
Optimally Moderated Internal (SG = 0.0), Vary Neutron Shield and Exterior		
0.00000	0.9136 ± 0.0012	0.9057 ± 0.0011
0.00100	0.8950 + 0.0011	0.8208 + 0.0012
0.00178	0.8887 + 0.0011	0.7931 + 0.0012
0.00316	0.8732 + 0.0012	0.7651 + 0.0012
0.00562	0.8505 + 0.0012	0.7454 + 0.0011
0.01000	0.8210 + 0.0011	0.7311 + 0.0012
0.01780	0.7957 + 0.0012	0.7233 + 0.0012
0.03160	0.7655 + 0.0012	0.7192 + 0.0011
0.05620	0.7432 + 0.0012	0.7195 + 0.0013
0.10000	0.7325 + 0.0013	0.7177 + 0.0012
0.17800	0.7252 + 0.0011	0.7206 + 0.0012
0.31600	0.7216 + 0.0012	0.7213 + 0.0012
0.56200	0.7211 + 0.0012	0.7211 + 0.0012
0.70000	0.7199 + 0.0012	0.7190 + 0.0012
0.80000	0.7213 + 0.0012	0.7184 + 0.0012
0.90000	0.7183 + 0.0013	0.7196 + 0.0012
1.00000	0.7189 + 0.0011	0.7194 + 0.0013
Vary Interior, Exterior and Neutron Shield Simultaneously		
0.00000	0.9136 ± 0.0012	0.9057 ± 0.0011
0.00100	0.8964 + 0.0012	0.8189 + 0.0012
0.00178	0.8879 + 0.0011	0.7913 + 0.0013
0.00316	0.8726 + 0.0012	0.7673 + 0.0013
0.00562	0.8496 + 0.0011	0.7459 + 0.0012
0.01000	0.8223 + 0.0012	0.7345 + 0.0012
0.01780	0.7903 + 0.0012	0.7237 + 0.0012
0.03160	0.7685 + 0.0012	0.7223 + 0.0011
0.05620	0.7504 + 0.0012	0.7242 + 0.0012
0.10000	0.7415 + 0.0013	0.7296 + 0.0012
0.17800	0.7445 + 0.0013	0.7404 + 0.0013
0.31600	0.7674 + 0.0013	0.7658 + 0.0013
0.56200	0.7904 + 0.0013	0.7898 + 0.0013
0.70000	0.7972 + 0.0014	0.7936 + 0.0014
0.80000	0.7969 + 0.0013	0.7956 + 0.0014
0.90000	0.8003 + 0.0013	0.8007 + 0.0013
1.00000	0.8000 ± 0.0013	0.8013 ± 0.0013

Table 6.4.5-13 Reactivity Results for TRIGA Fuel Elements, Screened Cans, Normal Conditions, Poisoned Basket

Moderator SG	Casks Touching ($k_{eff} \pm \sigma$)	8 Foot Center-To-Center ($k_{eff} \pm \sigma$)
Dry Exterior, Vary Internal Density		
0.00000	0.8376 ± 0.0018	0.8381 ± 0.0017
0.00100	0.8408 + 0.0017	0.8418 + 0.0016
0.00178	0.8408 + 0.0018	0.8412 + 0.0018
0.00316	0.8390 + 0.0017	0.8432 + 0.0016
0.00562	0.8371 + 0.0017	0.8399 + 0.0017
0.01000	0.8420 + 0.0017	0.8397 + 0.0018
0.01780	0.8383 + 0.0017	0.8419 + 0.0017
0.03160	0.8413 + 0.0017	0.8427 + 0.0017
0.05620	0.8466 + 0.0017	0.8448 + 0.0017
0.10000	0.8433 + 0.0016	0.8479 + 0.0017
0.17800	0.8510 + 0.0017	0.8502 + 0.0017
0.31600	0.8497 + 0.0016	0.8505 + 0.0016
0.56200	0.8453 + 0.0017	0.8484 + 0.0017
0.70000	0.8444 + 0.0016	0.8464 + 0.0017
0.80000	0.8321 + 0.0017	0.8432 + 0.0017
0.90000	0.8458 + 0.0017	0.8437 + 0.0017
1.00000	0.8527 + 0.0017	0.8540 + 0.0017
Optimally Moderated Cask Interior (SG = 1.0), Vary External Density		
0.00000	0.8527 ± 0.0017	0.8540 ± 0.0017
0.00100	0.8482 + 0.0018	0.8513 + 0.0016
0.00178	0.8532 + 0.0017	0.8513 + 0.0016
0.00316	0.8516 + 0.0017	0.8531 + 0.0017
0.00562	0.8546 + 0.0017	0.8539 + 0.0017
0.01000	0.8521 + 0.0018	0.8517 + 0.0019
0.01780	0.8528 + 0.0018	0.8515 + 0.0018
0.03160	0.8543 + 0.0017	0.8526 + 0.0017
0.05620	0.8506 + 0.0018	0.8503 + 0.0017
0.10000	0.8523 + 0.0018	0.8542 + 0.0016
0.17800	0.8507 + 0.0018	0.8478 + 0.0016
0.31600	0.8539 + 0.0017	0.8518 + 0.0016
0.56200	0.8545 + 0.0017	0.8525 + 0.0017
0.70000	0.8512 + 0.0017	0.8534 + 0.0017
0.80000	0.8548 + 0.0017	0.8529 + 0.0017
0.90000	0.8523 + 0.0016	0.8522 + 0.0017
1.00000	0.8540 + 0.0018	0.8523 + 0.0017
Vary Internal and External Density Simultaneously		
0.00000	0.8376 ± 0.0018	0.8381 ± 0.0017
0.00100	0.8396 + 0.0017	0.8382 + 0.0017
0.00178	0.8404 + 0.0016	0.8404 + 0.0017
0.00316	0.8430 + 0.0016	0.8413 + 0.0017
0.00562	0.8448 + 0.0017	0.8391 + 0.0016
0.01000	0.8400 + 0.0017	0.8398 + 0.0017
0.01780	0.8419 + 0.0017	0.8424 + 0.0018
0.03160	0.8394 + 0.0017	0.8439 + 0.0017
0.05620	0.8437 + 0.0017	0.8385 + 0.0017
0.10000	0.8477 + 0.0017	0.8477 + 0.0017
0.17800	0.8502 + 0.0017	0.8469 + 0.0017
0.31600	0.8463 + 0.0017	0.8494 + 0.0018
0.56200	0.8484 + 0.0017	0.8513 + 0.0017
0.70000	0.8471 + 0.0017	0.8459 + 0.0018
0.80000	0.8440 + 0.0017	0.8462 + 0.0016
0.90000	0.8429 + 0.0017	0.8451 + 0.0017
1.00000	0.8540 ± 0.0018	0.8523 ± 0.0017

Table 6.4.5-14 Reactivity Results for TRIGA Fuel Elements, Screened Cans, Accident Conditions, Poisoned Basket

Moderator SG	Casks Touching ($k_{eff} \pm \sigma$)	8 Foot Center-To-Center ($k_{eff} \pm \sigma$)
Dry Exterior and Neutron Shield, Vary Internal Moderator		
0.00000	0.9022 ± 0.0015	0.9015 ± 0.0016
0.00100	0.9019 + 0.0016	0.9022 + 0.0016
0.00178	0.8998 + 0.0016	0.9003 + 0.0016
0.00316	0.8992 + 0.0016	0.9009 + 0.0016
0.00562	0.8995 + 0.0017	0.9015 + 0.0017
0.01000	0.8998 + 0.0017	0.8956 + 0.0017
0.01780	0.8979 + 0.0017	0.9003 + 0.0017
0.03160	0.8966 + 0.0018	0.8946 + 0.0016
0.05620	0.8949 + 0.0015	0.8889 + 0.0015
0.10000	0.8893 + 0.0018	0.8844 + 0.0017
0.17800	0.8843 + 0.0018	0.8822 + 0.0016
0.31600	0.8772 + 0.0017	0.8765 + 0.0016
0.56200	0.8635 + 0.0018	0.8640 + 0.0017
0.70000	0.8586 + 0.0017	0.8657 + 0.0017
0.80000	0.8620 + 0.0016	0.8594 + 0.0016
0.90000	0.8622 + 0.0016	0.8600 + 0.0017
1.00000	0.8662 + 0.0017	0.8629 + 0.0018
Optimally Moderated Internal (SG = 0.0), Vary Neutron Shield and Exterior		
0.00000	0.9022 ± 0.0015	0.9015 ± 0.0016
0.00100	0.8970 + 0.0016	0.8644 + 0.0017
0.00178	0.8910 + 0.0016	0.8596 + 0.0018
0.00316	0.8862 + 0.0015	0.8542 + 0.0016
0.00562	0.8789 + 0.0016	0.8457 + 0.0016
0.01000	0.8687 + 0.0015	0.8438 + 0.0017
0.01780	0.8618 + 0.0017	0.8409 + 0.0018
0.03160	0.8539 + 0.0016	0.8386 + 0.0017
0.05620	0.8482 + 0.0017	0.8403 + 0.0018
0.10000	0.8427 + 0.0015	0.8381 + 0.0017
0.17800	0.8433 + 0.0017	0.8418 + 0.0016
0.31600	0.8424 + 0.0018	0.8405 + 0.0018
0.56200	0.8422 + 0.0017	0.8391 + 0.0017
0.70000	0.8438 + 0.0017	0.8399 + 0.0016
0.80000	0.8429 + 0.0018	0.8407 + 0.0017
0.90000	0.8423 + 0.0017	0.8445 + 0.0016
1.00000	0.8398 + 0.0016	0.8383 + 0.0017
Vary Interior, Exterior and Neutron Shield Simultaneously		
0.00000	0.9022 ± 0.0015	0.9015 ± 0.0016
0.00100	0.8948 + 0.0016	0.8662 + 0.0016
0.00178	0.8932 + 0.0017	0.8577 + 0.0016
0.00316	0.8881 + 0.0016	0.8524 + 0.0017
0.00562	0.8762 + 0.0016	0.8429 + 0.0017
0.01000	0.8722 + 0.0017	0.8431 + 0.0017
0.01780	0.8628 + 0.0016	0.8412 + 0.0017
0.03160	0.8586 + 0.0016	0.8450 + 0.0017
0.05620	0.8533 + 0.0017	0.8448 + 0.0018
0.10000	0.8496 + 0.0017	0.8458 + 0.0017
0.17800	0.8494 + 0.0017	0.8489 + 0.0017
0.31600	0.8500 + 0.0017	0.8459 + 0.0017
0.56200	0.8489 + 0.0018	0.8488 + 0.0018
0.70000	0.8443 + 0.0017	0.8463 + 0.0017
0.80000	0.8459 + 0.0017	0.8407 + 0.0018
0.90000	0.8421 + 0.0017	0.8483 + 0.0017
1.00000	0.8540 ± 0.0018	0.8504 ± 0.0019

Table 6.4.5-15 Single Package 10 CFR 71.55(b)(3) Evaluation k_{eff} Summary, TRIGA Fuel Element, Nonpoisoned Basket

Description	$k_{eff} \pm \sigma$	k_s
Single Cask / Inner Shell Reflected with H_2O	0.80664 ± 0.00136	0.82616
Single Cask / Inner Shell and Lead Reflected with H_2O	0.84194 ± 0.00130	0.86134
Single Cask / Inner Shell, Lead & Outer Shell Reflected with H_2O	0.84398 ± 0.00128	0.86334
Single Intact Cask Reflected with H_2O	0.84446 ± 0.00126	0.86392

Table 6.4.5-16 Single Package 10 CFR 71.55(b)(3) Evaluation k_{eff} Summary, TRIGA Fuel Element, Poisoned Basket

Description	$k_{eff} \pm \sigma$	k_s
Single Cask / Inner Shell Reflected with H_2O	0.85480 ± 0.00135	0.87430
Single Cask / Inner Shell and Lead Reflected with H_2O	0.87788 ± 0.00136	0.89740
Single Cask / Inner Shell, Lead & Outer Shell Reflected with H_2O	0.88369 ± 0.00133	0.90315
Single Intact Cask Reflected with H_2O	0.88117 ± 0.00131	0.90059

Table 6.4.5-17 Fuel Element Physical Characteristics Evaluation

Parameter							Cask Cavity Moderator Condition/Fuel Location							
							Dry - In Shift		0.5 g/cc - In Shift		1 g/cc - In Shift		1 g/cc – Shifted Out	
Fuel Rod OD	Clad Thickness	Fuel OD	Fuel ID	Active Fuel Length	Zirc Interior Rod OD	Zirc Mass (gram)	k_{eff}	$\Delta k/\sigma$	k_{eff}	$\Delta k/\sigma$	k_{eff}	$\Delta k/\sigma$	k_{eff}	$\Delta k/\sigma$
Nominal	Nominal	Nominal	Nominal	Nominal	Nominal	2059	0.85521	-	0.87591	-	0.87217	-	0.89939	-
Max	Nominal	Nominal	Nominal	Nominal	Nominal	2059	0.85102	-2.8	0.87063	-5.6	0.86795	-4.4	0.89480	-4.8
Nominal	Min	Nominal	Nominal	Nominal	Nominal	2059	0.85966	6.2	0.88920	14.0	0.89067	19.4	0.92184	23.3
Nominal	Nominal	Min	Nominal	Nominal	Nominal	1765	0.78425	-72.2	0.82168	-58.1	0.82388	-51.7	0.85987	-42.6
Nominal	Nominal	Max	Nominal	Nominal	Nominal	2068	0.85611	2.6	0.87530	-0.6	0.87327	1.2	0.90107	1.8
Nominal	Nominal	Nominal	Min	Nominal	Nominal	2071	0.85409	0.4	0.87776	2.0	0.87334	1.2	0.90196	2.7
Nominal	Nominal	Nominal	Nominal	Min	Nominal	1988	0.84974	-4.2	0.87304	-3.0	0.87192	-0.3	0.89885	-0.6
Nominal	Nominal	Nominal	Nominal	Max	Nominal	2129	0.85762	4.2	0.87705	1.2	0.87078	-1.5	0.89995	0.6
Nominal	Nominal	Nominal	Nominal	Nominal	Min	2059	0.85370	0.0	0.87322	-2.8	0.87095	-1.3	0.89785	-1.6
Nominal	Nominal	Nominal	Nominal	Nominal	Max	2059	0.85360	-0.1	0.87502	-0.9	0.87125	-1.0	0.89966	0.3
Nominal	Min	Max	Nominal	Nominal	Nominal	2191	0.88846	36.9	0.91259	37.9	0.91057	39.6	0.93977	42.6
Max	Min	Max	Nominal	Nominal	Nominal	2261	0.89797	46.7	0.92086	47.8	0.91631	44.9	0.94365	46.4
Max	Min	Max	Nominal	Nominal	Min	2261	0.89729	45.3	0.92035	46.6	0.91583	46.1	0.94260	44.9
Max	Min	Max	Min	Nominal	Min	2327	0.91165	60.7	0.92950	55.7	0.92648	56.0	0.94983	51.3
Max	Min	Max	Min	Max	Min	2406	0.91646	66.2	0.93183	57.7	0.92716	56.3	0.95048	52.7
Max	Min	Max	Min	Min	Min	2248	0.90919	58.1	0.92962	57.1	0.92491	54.8	0.95030	52.2

Table 6.4.5-18 Element Variation to Reduce k_s Below 0.95

Variation	k_{eff}	σ	k_s	Δk
Base	0.95048	0.00069	0.9687	
Single Cask	0.94221	0.00068	0.9604	-0.00827
Min Clad 0.01 inch	0.93007	0.00068	0.9482	-0.02041
Center rod 0.1 inch	0.94559	0.00066	0.9637	-0.00489
Center Rod 0.1 inch and Clad 0.01 inch	0.92465	0.00069	0.9428	-0.02583

Table 6.4.5-19 General Model Configuration – Dry to Wet System Reactivity Changes, 70 wt% ^{235}U Stainless Steel Clad Fuel - Nominal Fuel Parameters

Model Type	Fuel Material	Dry Interior		Wet Interior		Dry to Wet	Dry to Wet
		k_{eff}	σ	k_{eff}	σ	Δk	Δk/σ
Unit Cell	2060 g Zirc 1.6 H/Zr	1.43854	0.00074	1.34434	0.00088	-0.0942	-82
Unit Cell	2060 g Zirc 2.0 H/Zr	1.47297	0.00072	1.37063	0.00095	-0.1023	-86
Infinite Cask Array	2060 g Zirc 1.6 H/Zr	0.91389	0.00058	0.82201	0.00069	-0.0919	-102
Infinite Cask Array	2060 g Zirc 2.0 H/Zr	0.99893	0.00060	0.87887	0.00069	-0.1201	-131
Finite Cask Array	2060 g Zirc 2.0 H/Zr	0.85371	0.00068	0.87160	0.00067	0.0179	19
Single Cask	2060 g Zirc 1.6 H/Zr	0.69491	0.00059	0.80561	0.00066	0.1107	125

Table 6.4.5-20 Primary Fuel Type Reactivity Comparison[1] – Accident Conditions Eight-Cask Array (No Cans)

Fuel Type	Cask Cavity Moderator	Fuel Characteristics	Rod Location	k_{eff}	σ	k_s	Δk/σ
Al Clad	Dry	Nominal	Shifted In	0.61831	0.00053	0.63617	-
14 inch	Wet	Nominal	Shifted In	0.67516	0.00056	0.69308	73.7
	Wet	Most Reactive	Shifted In	0.68914	0.00056	0.70706	91.9
	Wet	Most Reactive	Shifted Out	0.68690	0.00054	0.70478	90.7
Al Clad -	Dry	Nominal	Shifted In	0.60606	0.00051	0.62388	-
15 inch	Wet	Nominal	Shifted In	0.66104	0.00058	0.67900	71.2
	Wet	Most Reactive	Shifted In	0.68272	0.00055	0.70062	102.2
	Wet	Most Reactive	Shifted Out	0.67985	0.00052	0.69769	101.3
SS Clad -	Dry	Nominal	Shifted In	0.77575	0.00058	0.79371	-
20% Enriched	Wet	Nominal	Shifted In	0.82684	0.00064	0.84492	59.2
	Wet	Most Reactive	Shifted In	0.86114	0.00061	0.87916	101.4
	Wet	Most Reactive	Shifted Out	0.89909	0.00064	0.91717	142.8
SS Clad	Dry	Nominal	Shifted In	0.85521	0.00068	0.87337	-
70% Enriched	Wet	Nominal	Shifted In	0.87217	0.00067	0.89031	17.8
	Wet	Most Reactive	Shifted In	0.90587	0.00069	0.92405	52.3
	Wet	Most Reactive	Shifted Out	0.93024	0.00069	0.94842	77.4

Table 6.4.5-21 Normal Condition Maximum System Reativities (No Cans)[2]

Array Size	Neutron Shield	Cask Cavity	Fuel Config	k_{eff}	σ	k_s
Infinite	Yes	Dry	MRE	0.84554	0.00066	0.86366
Infinite	Yes	Wet	MRE	0.92398	0.00068	0.94214

[1] Fueled follower rods are not evaluated separately as their physical characteristics and fuel compositions are bounded by a stainless steel clad 20% enriched element.

[2] Most reactive element configuration as documented under accident conditions.

6.4.6 TRIGA Fuel Cluster Rods

This section presents the criticality evaluation for the NAC-LWT with nonpoisoned and poisoned basket modules for intact and failed TRIGA fuel cluster rods. In the nonpoisoned configuration, up to 480 intact TRIGA fuel cluster rods can be transported in the NAC-LWT cask. In the poisoned configuration, up to 560 intact TRIGA fuel cluster rods can be transported in the NAC-LWT cask. Up to six TRIGA fuel cluster rods can be contained in sealed canisters. The analyses are performed to satisfy the requirements of 10 CFR Parts 71.55 and 71.59, as well as IAEA Transportation Safety Standards (TS-R-1).

The design basis TRIGA fuel cluster rod is evaluated for the most reactive basket and intact fuel configurations, including both geometric perturbations and manufacturing tolerances, under wet and dry conditions in Section 6.4.6.1. The most reactive cask configuration with three baskets of intact design-basis TRIGA fuel and two baskets of fuel in sealed cans, is evaluated under normal and accident conditions in Section 6.4.6.2. Preferential flooding of the sealed failed fuel cans is also evaluated. The maximum k_{eff} of the NAC-LWT cask loaded with design-basis TRIGA fuel cluster rods is evaluated under normal and accident conditions in Section 6.4.6.3. A single package evaluation, in accordance with 10 CFR 71.55(b)(3), is performed in Section 6.4.6.4. The analyses demonstrate that, including all calculational and mechanical uncertainties, the NAC-LWT cask remains subcritical ($k_s < 0.95$) under normal and accident conditions.

The poisoned and nonpoisoned basket may contain both HEU and LEU cluster rods. The evaluations of LEU cluster rods are based on the analysis trends observed for the HEU rods. As the nonpoisoned basket is significantly more reactive than the poisoned basket configuration, expanded scope HEU and LEU evaluations are based on the nonpoisoned basket model. LEU evaluations, in conjunction with expanded HEU characteristics, are included in Section 6.4.6.5.

6.4.6.1 Most Reactive Fuel and Basket Configurations

The primary basket tolerances affecting system reactivity are geometric tolerances, including the positioning of the fuel cluster rods and aluminum tube insert in the cell opening, the size of the cell opening; and manufacturing tolerances, including the thickness of the steel plate dividing the basket openings. The effect of these tolerances is evaluated sequentially in this section.

6.4.6.1.1 Geometric Perturbations

The TRIGA fuel cluster rods are held in place by basket modules and a fuel rod insert (Figure 6.2.6-1) with a welded, 4 × 4 array of 0.75-inch OD aluminum tubes. The TRIGA fuel cluster rods, one per insert tube, may shift to any location in a tube. Wet and dry conditions of the

TRIGA fuel cluster rods are evaluated to determine the most reactive fuel and basket configuration.

Table 6.4.6-1 and Table 6.4.6-2 show the cask k_{eff} for the nonpoisoned and poisoned baskets with TRIGA fuel cluster rods. The effects evaluated in the tables include fuel movement within the fuel rod inserts and partial loadings under wet and dry moderation conditions.

The most reactive wet configuration contains 16 TRIGA fuel cluster rods moved outward from the center of each 4 × 4 insert array and the inserts moved to the center of the basket with k_{eff} = 0.7571 ± 0.0025 and 0.7995 ± 0.0026, for the nonpoisoned and poisoned basket configurations, respectively. This wet configuration maximizes the moderation between TRIGA fuel cluster rods within wet inserts and maximizes the interaction between inserts. It is referred to as the wet configuration for TRIGA fuel cluster rods.

The dry configuration selected as most reactive, including no water in the neutron shield, contains 16 TRIGA fuel cluster rods moved inward to the center of each 4 × 4 insert array and the inserts moved to the center of the basket with k_{eff} = 0.8047 ± 0.0020 and 0.7489 ± 0.0019 for the non-poisoned and poisoned basket configurations, respectively. This dry configuration minimizes the neutron leakage of TRIGA fuel cluster rods within the dry basket and is referred to as the dry configuration.

Finally, the effect of partial fuel element loading was examined. Table 6.4.6-1 and Table 6.4.6-2 show that partial loading of the elements in the basket generally serves to decrease the reactivity for both the wet and dry poisoned and non-poisoned baskets. Although the case with one rod removed from the wet, nonpoisoned basket has a higher k_{eff} than the most reactive full load configuration, the difference in k_{eff} values is significantly less than 2σ. This makes the result statistically insignificant, and the full loading cases can be selected for further evaluation as stated above.

6.4.6.1.2 Manufacturing Tolerance Perturbations

The manufacturing tolerance analyses were performed by sequentially analyzing perturbations to the most reactive configurations from Section 6.4.6.1.1 and retaining appropriate perturbations. First, the effect of reducing the basket plate thickness was examined. Table 6.4.6-3 and Table 6.4.6-4 show that, for the non-poisoned and poisoned baskets, reducing the thickness of the basket plates increases the reactivity of the system. Thus, this configuration is utilized for the subsequent analyses.

Next, the dimensional tolerances of the aluminum tube inserts were evaluated. Three different cases were examined. The first case examined an increase in the aluminum tube diameter, while

retaining the nominal thickness, the second case examined a decrease in the aluminum tube diameter while retaining the nominal wall thickness, and the third case examined the effect of reducing the aluminum tube thickness. The results presented in Table 6.4.6-3 and Table 6.4.6-4 show that, for the non-poisoned and poisoned basket configurations, the highest k_{eff} values are obtained for the aluminum tubes at maximum diameter, and for the dry case with the aluminum tubes at minimum thickness. While these cases produced the highest values of k_{eff}, it should be noted that the differences between these results and the previous case is insignificant because they are within 2σ of one another.

After incorporating the previously described modifications, the effect of minimizing the basket insert opening was examined. As shown in Table 6.4.6-3 and Table 6.4.6-4, this perturbation results in equal or higher k_{eff} values for 3 of the 4 cases, with the dry, non-poisoned case resulting in a slight decrease in k_{eff}. As previously described, these differences are considered insignificant because they differ by less than 2σ. Nevertheless, because this perturbation is expected to increase the interaction between the individual baskets, it is retained in the most reactive configuration for further analysis.

Therefore, the most reactive case for intact fuel in the poisoned basket is selected as a wet configuration consisting of the following features: fuel elements moved away from the center of the aluminum center, aluminum insert moved towards the basket center, minimum divider plate thickness, minimum basket opening, and maximum aluminum tube insert diameter. The resulting reactivity for this system is, $k_{eff} = 0.8025 \pm 0.0025$. Likewise, the most reactive case for intact fuel in the non-poisoned basket is selected as a dry configuration consisting of the following features: fuel elements moved toward the center of the aluminum insert, aluminum insert moved towards the basket center, minimum divider plate thickness, and minimum basket opening. The resulting reactivity for this system is, $k_{eff} = 0.8129 \pm 0.0021$.

6.4.6.2 Sealed Cans Criticality Evaluation

Criticality calculations were performed for sealed failed fuel cans in the top and base basket modules of the cask. Three cases are examined for each basket combination, an all dry system, a full wet system, and a preferentially wet system with water only in the sealed failed fuel can. Fuel in sealed cans is modeled homogeneously, heterogeneously, and with partial loadings. The three central modules contain intact fuel in the most reactive wet or dry configurations, as appropriate, as determined in Section 6.4.5.2. The reactivities of the failed fuel combinations are compared to the reactivities of respective intact fuel configurations, and moderator density studies are performed on the most reactive configurations in Section 6.4.6.3.

Table 6.4.6-5 and Table 6.4.6-6 show the results of the preferential flooding and partial loading studies of the sealed failed fuel can configurations with TRIGA fuel cluster rods in nonpoisoned and poisoned baskets. Each sealed can contains up to six equivalent TRIGA fuel cluster rods. The most reactive cases for the non-poisoned and poisoned baskets contain maximum outer diameter, preferential wet sealed fuel cans filled with a homogeneous mixture of fuel material and water. The most reactive non-poisoned and poisoned cases are $k_{eff} = 0.8669 \pm 0.0022$ and $k_{eff} = 0.8384 \pm 0.0021$, respectively.

6.4.6.3 Moderator Density Criticality Evaluations for TRIGA Fuel Cluster Rods

The evaluations for normal and accident conditions include moderator density variations in the cask cavity and external environment to the cask. One evaluation is performed for each basket (non-poisoned / poisoned) combination. Table 6.4.6-7 and Table 6.4.6-8 show the most reactive configurations for these combinations as determined in Section 6.4.6.2. The tables contain results for infinite axial length models for the intact fuel and finite models with cask end caps for failed fuel. Comparing the reactivity of the more conservative infinite models with finite models is acceptable, provided the result with the highest k_{eff} is always selected. Alternately, converting infinite models to finite models is equally acceptable.

As seen in Table 6.4.6-7 and Table 6.4.6-8, the most reactive non-poisoned and poisoned basket configurations with TRIGA fuel cluster rods contain two baskets with sealed cans preferentially flooded with a dry cask, $k_{eff} = 0.8669 \pm 0.0022$ and $k_{eff} = 0.8384 \pm 0.0021$, respectively. These configurations are chosen for moderator density variations.

Results of the moderator density variation cases for normal and accident conditions for the non-poisoned and poisoned basket configurations are presented in Table 6.4.6-9 through Table 6.4.6-12.

As seen in Table 6.4.6-10, the most reactive configuration for the TRIGA fuel cluster rods in the non-poisoned basket, analyzed conservatively without end caps, contains 5 baskets with intact fuel under accident conditions with no water in the cask interior, neutron shield, or exterior, $k_{eff} = 0.8756 \pm 0.0023$. Per Section 6.1.1, this corresponds to $k_s = 0.8970$.

As seen in Table 6.4.6-12, the most reactive configuration for the TRIGA fuel cluster rods in the poisoned basket, contains two baskets with maximum diameter sealed cans, preferentially flooded, under accident conditions with no water in the cask interior, neutron shield, or exterior, $k_{eff} = 0.8399 \pm 0.0021$. Per Section 6.1.1, this corresponds to $k_s = 0.8609$.

6.4.6.4 Single Package Criticality Evaluation

To satisfy 10 CFR 71.55(b)(3), an analysis of the reflection of the containment system (inner shell) by water is performed on a single wet cask. Successive replacement of the cask radial shields with water reflection is also evaluated for each basket (poisoned/nonpoisoned) configuration. As seen in Table 6.4.6-13 and Table 6.4.6-14, the reactivity of the system drops as each radial shield of the cask is replaced by water, from the full cask surrounded by water, to the inner shell surrounded by water.

6.4.6.5 Increased Content Scope for TRIGA Cluster Rods

The TRIGA cluster rod content is modified by first expanding on the HEU fuel characteristics, i.e., fuel volume and clad thickness, followed by evaluations increasing the allowed fuel composition range, i.e. changes in H/Zr ratio, ^{235}U enrichment, wt % U in the fuel matrix, and ^{235}U mass.

6.4.6.5.1 Increased Fuel Volume and Reduced Clad Thickness Evaluations for HEU Fuel

The HEU TRIGA fuel cluster rod contents evaluated previously in this section, and as presented in Table 6.2.6-1 and Table 6.2.6-2, are based on nominal, dimensional and compositional values. To ensure that criticality safety is maintained for parameter values slightly different from those listed in the tables, a set of calculations are performed with increased active fuel length, increased fuel pellet diameter, decreased cladding thickness, and corresponding increases in the uranium and zirconium masses due to the increased volume.

Calculations are performed for two cases based on the most reactive configuration presented in Section 6.4.6.3, which is for the nonpoisoned basket configuration. In each case, the active fuel length is increased to 22.5 inches, the cladding thickness is decreased to 0.015 inch, and the pellet diameter is set at 0.52 inch for the first case, then 0.53 inch for the second case. The results are presented in Table 6.4.6-15. As seen in the results, the increase in the fuel volume for the maximum pellet diameter (0.53 inch) results in an increase in k_s of 1.2 percent. The resulting value is well below the 0.95 limit. Note that for the dry system, reducing clad thickness allows the fuel rods to shift closer to the center of each cluster rod insert. For the wet system, a reduced clad thickness increases the moderator volume.

6.4.6.5.2 Variations in Fuel Material Compostions Including the Addition of LEU Fuel Material

Criticality evaluations for the fuel material composition changes are divided into three sets of analysis. The first analysis stage uses the HEU and LEU intact and damaged fuel models to determine the effect of the H/Zr ratio on system reactivity. Next, cask cavity moderator density studies confirm that the most reactive system configuration at the requested fissile material mass, enrichment, and H/Zr ratio remains the preferentially flooded cask with dry cask cavity. These evaluations all rely on an accident cask configuration with no neutron shield, coupling the casks in the infinite array modeled. The final set of evaluations runs normal condition models to demonstrate that the accident condition bounds and the criticality safety index (CSI) is 0 for all conditions. The set also includes the necessary analysis to demonstrate that the results from a single cask, containment reflected, is bounded. TRIGA fuel rod geometry for the HEU and LEU evaluations is based on the previously determined geometry summarized in Table 6.4.6-20. The maximum fuel mass (grams ^{235}U), maximum enrichment (wt % ^{235}U), and minimum weight percent uranium employed in the analysis are also contained in Table 6.4.6-20. In conjunction with the hydrogen to zirconium ratio, the minimum uranium weight percent in the fuel matrix determines the maximum quantity of moderator (hydrogen) within the fuel matrix.

Hydrogen to Zirconium Ratio Studies

For the accident condition cask array model, including loss of neutron shield with a dry cask exterior, the system reactivities are evaluated for H/Zr ratios from 1.5 to 1.7. The system is evaluated for intact fuel and damaged fuel with a flooded and a dry cask cavity. For the dry cavity, the fuel is placed in the maximum reactivity dry cavity geometry configuration, while for the flooded cavity, the wet cavity most reactive geometry configuration is used. Note that for the dry cask cavity damaged fuel case, a preferentially flooded (full density water) canister is modeled. As seen in Figure 6.4.6-1 and Figure 6.4.6-2, the maximum reactivity is associated with a maximum H/Zr ratio (1.7) for LEU and HEU fuel under both dry and wet conditions. The magnitude of the increase varies by configuration and ranges from Δk=0.011 to 0.045. Increases in reactivity are higher for the HEU material than for the LEU configuration. Therefore, a maximum H/Zr ratio of 1.7 is used for the optimum moderator density evaluation.

Maximum Reactivity Moderator / Optimum Moderator Condition Study

HEU and LEU configurations are evaluated at various cask cavity moderator density conditions. All models employ fuel at the maximum H/Zr ratio of 1.7. The maximum reactivity condition cask, i.e., preferentially flooded damaged fuel can (damaged fuel model only), cask accident model, and exterior moderator (dry), is used in these evaluations. HEU and LEU optimum moderator density plots for the dry cavity most reactive basket configuration ("Dry Cavity

MRC") and the wet cavity most reactive basket configuration ("Wet Cavity MRC") are included in Figure 6.4.6-3 and Figure 6.4.6-4. Maximum system reactivity is obtained from the damaged fuel can model with a dry cask cavity. Figure 6.4.6-5 confirms that the fully flooded damaged fuel can represents the bounding scenario.

The maximum system reactivities for the accident models are summarized in Table 6.4.6-16.

Single Cask Containment (Fully Reflected) and Normal Condition Array Evaluations

A normal condition infinite cask array is evaluated to demonstrate compliance with 10 CFR 71.55 and 71.59. Normal condition cask array results are summarized in Table 6.4.6-17. Reactivity of the normal condition array is lower, as the radial neutron shield reduces neutronic interaction between casks.

A single cask evaluation is performed to comply with 10 CFR 71.55(b)(3). The containment for the NAC-LWT is the cask inner shell. While no operating condition results in removal of the cask outer shell and lead gamma shield, the most reactive preferential flooded and fully flooded cases are reevaluated by removing the lead and outer shells (including neutron shield), and reflecting the system by 20 cm water at full density on the X, Y and Z faces. Single cask, with containment fully water reflected reactivities are summarized in Table 6.4.6-18.

Maximum Reactivities and Comparison to Limits

Based on the TRIGA bias k_s, the bias and uncertainty adjusted Monte Carlo-generated system reactivity is summarized in Table 6.4.6-19 for each of the three primary analysis groups.

The maximum adjusted neutron multiplication factor, (k_s), is 0.9303. The maximum reactivity is based on the following model characteristics:

- HEU rods
- 0.53-inch pellet diameter, 0.015-inch clad thickness and 22.5 inches active fuel length
- Maximum 95 wt % ^{235}U enriched material with a minimum 9.5 wt % U in the fuel meat (bounds LEU fuel material maximum 20 wt % ^{235}U enriched material with a minimum 43 wt % U in the fuel meat)
- Damaged fuel cans containing an equivalent 6 intact fuel rods per can
- Preferentially flooded can
- Void cask cavity and exterior
- Loss of neutron shield

The maximum reactivity is calculated under hypothetical accident conditions. As an infinite cask array remains subcritical under normal and accident conditions, the criticality safety index (CSI) is 0.

6.4.6.6 Conclusion

Thus, including all calculational and mechanical uncertainties, an infinite array of NAC-LWT casks remains subcritical, and is below the 0.95 limit, corrected for bias and uncertainty, under normal and accident conditions with fuel rod parameters as defined in Table 6.4.6-20 and the following defined quantity limits:

Nonpoisoned Baskets:

1. 480 TRIGA fuel cluster rods.
2. Sealed damaged fuel cans (DFCs), top and bottom baskets only, with up to six damaged TRIGA fuel cluster rods or fuel debris and remainder of baskets filled with undamaged fuel.

Poisoned Baskets:

1. 560 TRIGA fuel cluster rods.
2. Sealed DFCs, top and bottom baskets only, with up to six damaged TRIGA fuel cluster rods or fuel debris and remainder of baskets filled with undamaged fuel.

Figure 6.4.6-1 HEU Cluster Rod Reactivity versus H/Zr Ratio – Accident Condition Cask Array

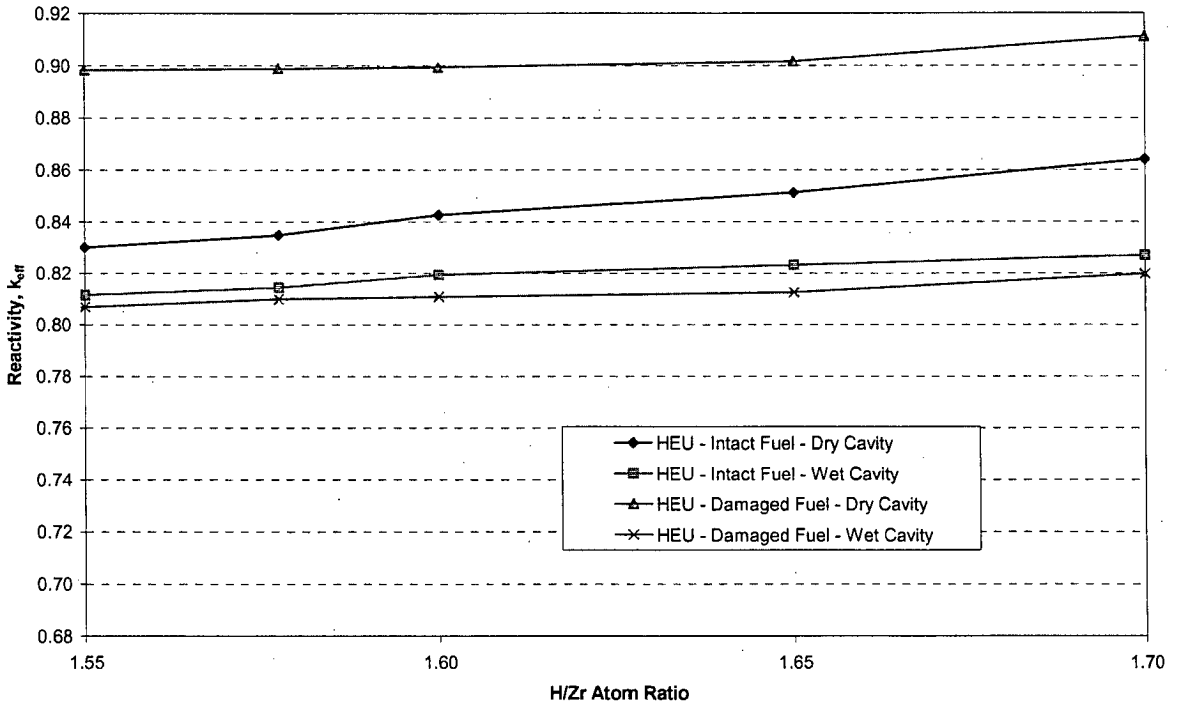

Figure 6.4.6-2 LEU Cluster Rod Reactivity versus H/Zr Ratio – Accident Condition Cask Array

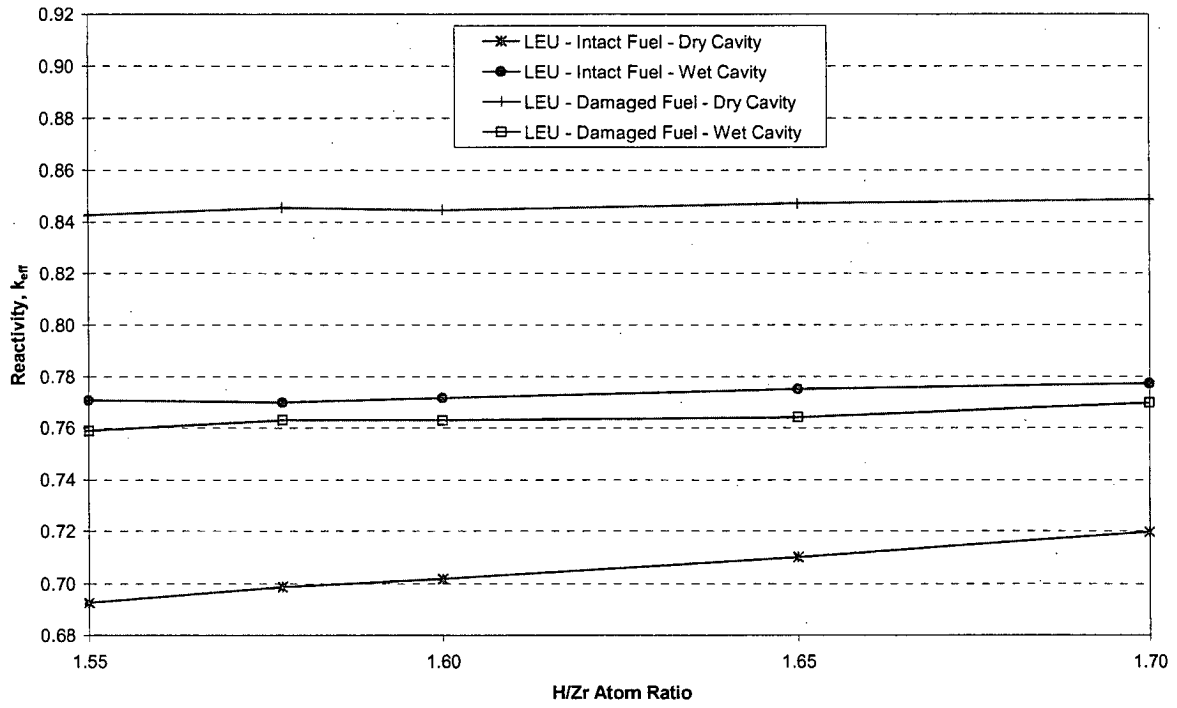

Figure 6.4.6-3 HEU TRIGA Cluster Rod System Reactivity versus Cask Cavity Moderator

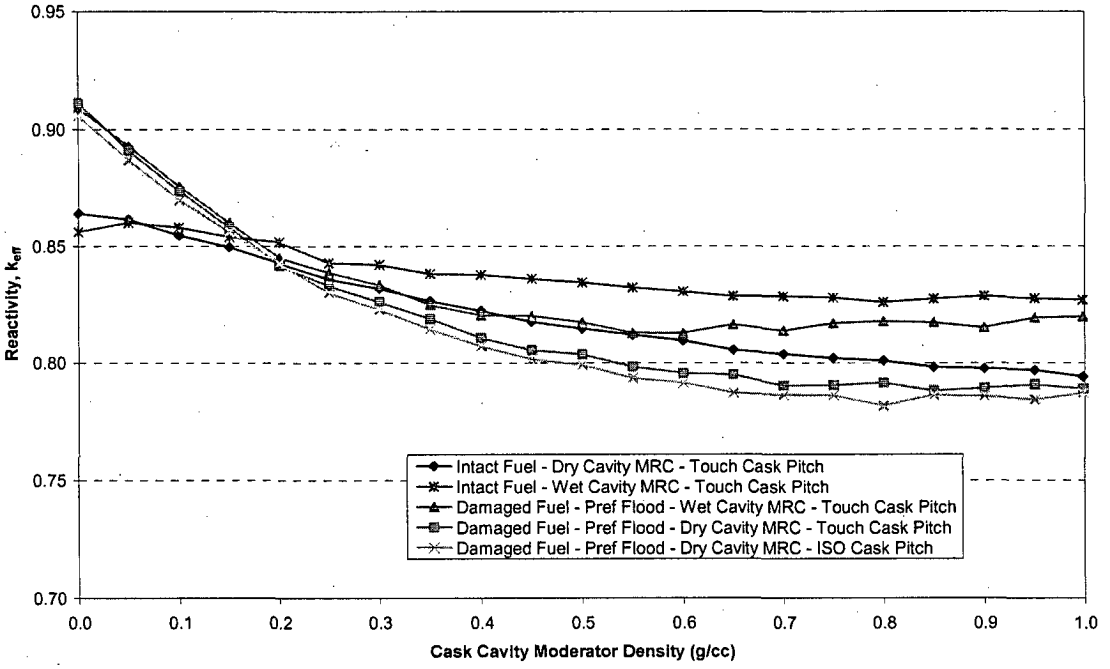

Figure 6.4.6-4 LEU TRIGA Cluster Rod System Reactivity versus Cask Cavity Moderator

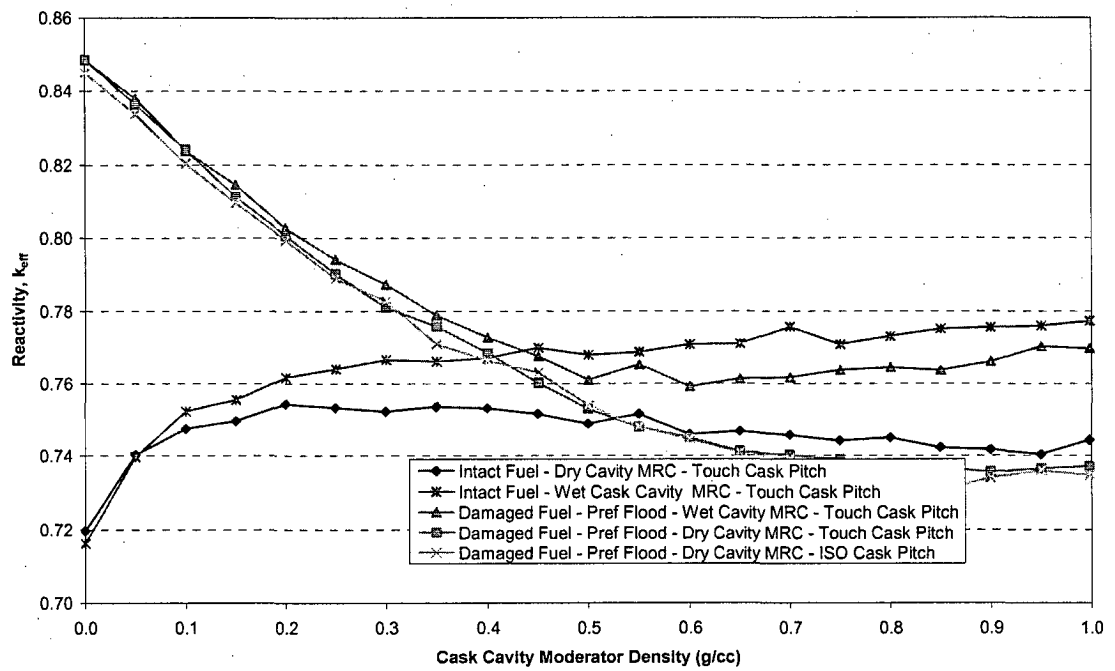

Figure 6.4.6-5 TRIGA Cluster Rod Reactivity versus Damaged Fuel Can Moderator (Pref Flood – Dry Cask Cavity)

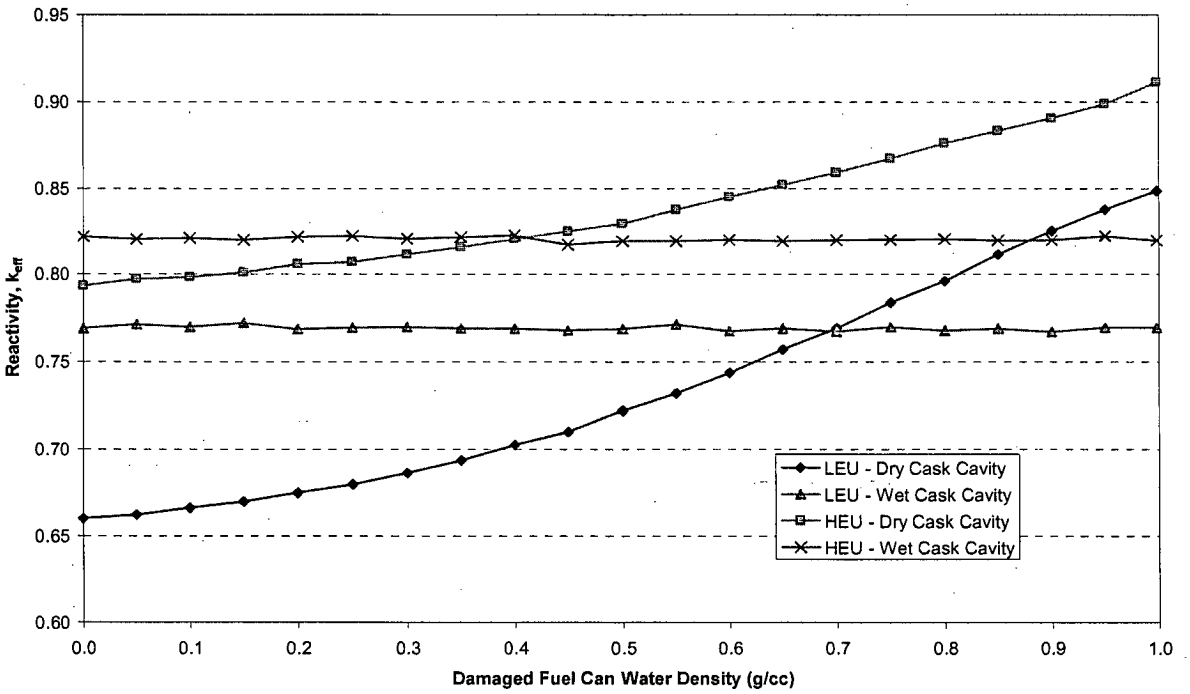

Table 6.4.6-1 Cask k_{eff} with TRIGA Fuel Cluster Rods – Fuel Rod Placement Perturbations, Nonpoisoned Basket

Basket Configuration	Wet Case Results $k_{eff} \pm \sigma$	Dry Case Results $k_{eff} \pm \sigma$
Nominal Centered Fuel and Al Insert	0.7340 ± 0.0026	0.8001 ± 0.0019
Elements Moved To Al Insert Center	0.7110 ± 0.0027	0.8076 ± 0.0019
Elements Moved Away From Al Insert Center	0.7458 ± 0.0026	0.8005 ± 0.0020
Al Insert Moved To Basket Center[1]	0.7571 ± 0.0025	0.8047 ± 0.0020
Al Insert Moved Away From Basket Center[1]	0.7391 ± 0.0025	0.8027 ± 0.0020
1 Rod Removed From Each Al Insert	0.7576 ± 0.0026	0.7782 ± 0.0020
2 Rods Removed From Each Al Insert	0.7558 ±0.0024	0.7503 ± 0.0020
3 Rods Removed From Each Al Insert	0.7414 ± 0.0022	-

Note:

[1] The most reactive fuel positioning is retained.

Table 6.4.6-2 Cask k_{eff} with TRIGA Fuel Cluster Rods – Fuel Rod Placement Perturbations, Poisoned Basket

Basket Configuration	Wet Case Results $k_{eff} \pm \sigma$	Dry Case Results $k_{eff} \pm \sigma$
Nominal Centered Fuel and Al Insert	0.7809 ± 0.0026	0.7435 ± 0.0020
Elements Moved To Al Insert Center	0.7654 ± 0.0025	0.7501 ± 0.0019
Elements Moved Away From Al Insert Center	0.7922 ± 0.0027	0.7468 ± 0.0020
Al Insert Moved To Basket Center[1]	0.7995 ± 0.0026	0.7489 ± 0.0019
Al Insert Moved Away From Basket Center[1]	0.7914 ± 0.0027	0.7476 ± 0.0022
1 Rod Removed From Each Al Insert	0.7956 ± 0.0027	0.7163 ± 0.0019
2 Rods Removed From Each Al Insert	0.7882 ± 0.0026	0.6831 ± 0.0019
3 Rods Removed From Each Al Insert	0.7764 ± 0.0026	-

Note:

[1] The most reactive fuel in tube motion is retained.

Table 6.4.6-3 Axially Infinite Cask k_{eff} with TRIGA Fuel Cluster Rods – Basket and Insert Manufacturing Tolerance Perturbations, Nonpoisoned Basket

Basket Configuration	Wet Case Results $k_{eff} \pm \sigma$	Dry Case Results $k_{eff} \pm \sigma$
Base Case[1]	0.7571 ± 0.0025	0.8047 ± 0.0020
Thin SS Basket Plates	0.7652 ± 0.0025	0.8140 ± 0.0020
Maximum Al Insert Tube Diameter[2]	0.7653 ± 0.0027	0.8146 ± 0.0022
Minimum Al Insert Tube Diameter[2]	0.7487 ± 0.0025	0.8084 ± 0.0019
Minimum Al Insert Tube Thickness[2]	0.7625 ± 0.0026	0.8157 ± 0.0021
Minimum Basket Opening[2]	0.7682 ± 0.0026 [3]	0.8129 ± 0.0021

Notes:

1 Most reactive configurations as determined in Section 6.4.6.1.1.

2 Incorporates minimum thickness stainless steel, basket divider plates.

3 Maximum aluminum tube diameter.

Table 6.4.6-4 Axially Infinite Cask k_{eff} with TRIGA Fuel Cluster Rods – Basket and Insert Manufacturing Tolerance Perturbations, Poisoned Basket

Basket Configuration	Wet Case Results $k_{eff} \pm \sigma$	Dry Case Results $k_{eff} \pm \sigma$
Base Case[1]	0.7995 ± 0.0026	0.7489 ± 0.0019
Thin SS Basket Plates	0.8019 ± 0.0024	0.7513 ± 0.0020
Maximum Al Insert Tube Diameter[2]	0.8055 ± 0.0027	0.7512 ± 0.0019
Minimum Al Insert Tube Diameter[2]	0.7969 ± 0.0026	0.7507 ± 0.0018
Minimum Al Insert Tube Thickness[2]	0.7995 ± 0.0023	0.7518 ± 0.0019
Minimum Basket Opening[2]	0.8025 ± 0.0025 [3]	0.7518 ± 0.0018 [4]

Notes:

1 Most reactive configurations as determined in Section 6.4.6.1.1.

2 Incorporates minimum thickness stainless steel, basket divider plates.

3 Maximum aluminum tube diameter.

4 Minimum aluminum tube thickness.

Table 6.4.6-5 Sealed Can Preferential Flooding and Partial Loading Reactivity Evaluations for TRIGA Fuel Rod Clusters, Nonpoisoned Basket

Description	$k_{eff} \pm \sigma$ Dry Cask/Dry Can	$k_{eff} \pm \sigma$ Wet Cask/Wet Can	$k_{eff} \pm \sigma$ Dry Cask/Wet Can
1 Solid Fuel Lump	0.7184 ± 0.0025	0.7654 ± 0.0024	0.6954 ± 0.0022
2 Solid Fuel Lumps	0.7053 ± 0.0021	0.7546 ± 0.0025	0.6721 ± 0.0020
3 Solid Fuel Lumps	0.6946 ± 0.0022	0.7597 ± 0.0025	0.6704 ± 0.0022
4 Solid Fuel Lumps	0.6983 ± 0.0020	0.7672 ± 0.0026	0.6714 ± 0.0023
5 Solid Fuel Lumps	0.6995 ± 0.0024	0.7620 ± 0.0028	0.6723 ± 0.0022
Mixture Full Can Height	0.6917 ± 0.0021	0.7592 ± 0.0024	0.8669 ± 0.0022
Mixture Half Can Height	0.6932 ± 0.0021	0.7582 ± 0.0025	0.7226 ± 0.0022
Mixture Full Can Height, 50 % mass	0.6807 ± 0.0022	0.7606 ± 0.0025	0.7416 ± 0.0021

Table 6.4.6-6 Sealed Can Preferential Flooding and Partial Loading Reactivity Evaluations for TRIGA Fuel Rod Clusters, Poisoned Basket

Description	$k_{eff} \pm \sigma$ Dry Cask/Dry Can	$k_{eff} \pm \sigma$ Wet Cask/Wet Can	$k_{eff} \pm \sigma$ Dry Cask/Wet Can
1 Solid Fuel Lump	0.6957 ± 0.0022	0.7937 ± 0.0025	0.6662 ± 0.0020
2 Solid Fuel Lumps	0.6704 ± 0.0021	0.7942 ± 0.0026	0.6405 ± 0.0022
3 Solid Fuel Lumps	0.6610 ± 0.0020	0.7959 ± 0.0026	0.6389 ± 0.0019
4 Solid Fuel Lumps	0.6592 ± 0.0020	0.7986 ± 0.0025	0.6389 ± 0.0022
5 Solid Fuel Lumps	0.6561 ± 0.0019	0.8001 ± 0.0023	0.6409 ± 0.0020
Mixture Full Can Height	0.6507 ± 0.0019	0.7993 ±0.0025	0.8384 ± 0.0021
Mixture Half Can Height	0.6575 ± 0.0019	0.8045 ± 0.0029	0.6741 ± 0.0022
Mixture Full Can Height, 50 % mass	0.6422 ± 0.0019	0.7992 ± 0.0027	0.6957 ± 0.0020

Table 6.4.6-7 Summary of Most Reactive Configurations, TRIGA Fuel Cluster Rods, Nonpoisoned Basket

	Wet	Dry	Preferential
Intact Fuel	0.7682 ± 0.0026	0.8129 ± 0.0021	-
Sealed Fuel Cans[1]	0.7672 ± 0.0026	0.7184 ± 0.0025	0.8669 ± 0.0022

Note:

[1] Remainder of baskets filled with intact fuel.

Table 6.4.6-8 Summary of Most Reactive Configurations, TRIGA Fuel Cluster Rods, Poisoned Basket

	Wet	Dry	Preferential
Intact Fuel	0.8025 ± 0.0025	0.7518 ± 0.0018	-
Sealed Fuel Cans[1]	0.8045 ± 0.0029	0.6957 ± 0.0022	0.8384 ± 0.0021

Note:

[1] Remainder of baskets filled with intact fuel.

Table 6.4.6-9 Reactivity Results for TRIGA Fuel Cluster Rods, Sealed Cans, Normal Conditions, Nonpoisoned Basket

Moderator SG	Casks Touching ($k_{eff} \pm \sigma$)	8 Foot Center-To-Center ($k_{eff} \pm \sigma$)
Dry Exterior, Vary Internal Density		
0.00000	0.7292 ± 0.0023	0.7270 ± 0.0025
0.00100	0.7294 + 0.0024	0.7258 + 0.0026
0.00178	0.7262 + 0.0025	0.7312 + 0.0025
0.00316	0.7267 + 0.0024	0.7316 + 0.0024
0.00562	0.7277 + 0.0024	0.7294 + 0.0024
0.01000	0.7240 + 0.0024	0.7312 + 0.0023
0.01780	0.7249 + 0.0025	0.7279 + 0.0025
0.03160	0.7307 + 0.0026	0.7322 + 0.0025
0.05620	0.7392 + 0.0024	0.7333 + 0.0024
0.10000	0.7345 + 0.0024	0.7349 + 0.0025
0.17800	0.7354 + 0.0025	0.7339 + 0.0024
0.31600	0.7298 + 0.0025	0.7285 + 0.0025
0.56200	0.7074 + 0.0024	0.7100 + 0.0026
0.70000	0.7064 + 0.0022	0.7055 + 0.0026
0.80000	0.7140 + 0.0027	0.7083 + 0.0024
0.90000	0.7137 + 0.0026	0.7201 + 0.0024
1.00000	0.7168 + 0.0026	0.7216 + 0.0027
Optimally Moderated Cask Interior (SG = 0.05620), Vary External Density		
0.00000	0.7292 ± 0.0023	0.7270 ± 0.0025
0.00100	0.7354 + 0.0024	0.7352 + 0.0028
0.00178	0.7351 + 0.0025	0.7360 + 0.0026
0.00316	0.7347 + 0.0024	0.7347 + 0.0023
0.00562	0.7329 + 0.0025	0.7372 + 0.0025
0.01000	0.7303 + 0.0023	0.7316 + 0.0024
0.01780	0.7306 + 0.0024	0.7296 + 0.0027
0.03160	0.7296 + 0.0025	0.7339 + 0.0024
0.05620	0.7321 + 0.0023	0.7324 + 0.0022
0.10000	0.7369 + 0.0023	0.7305 + 0.0021
0.17800	0.7325 + 0.0024	0.7343 + 0.0025
0.31600	0.7307 + 0.0026	0.7324 + 0.0024
0.56200	0.7297 + 0.0028	0.7359 + 0.0025
0.70000	0.7341 + 0.0021	0.7300 + 0.0022
0.80000	0.7316 + 0.0024	0.7359 + 0.0024
0.90000	0.7334 + 0.0025	0.7313 + 0.0026
1.00000	0.7308 + 0.0025	0.7318 + 0.0023
Vary Internal and External Density Simultaneously		
0.00000	0.7292 ± 0.0023	0.7270 ± 0.0025
0.00100	0.7291 + 0.0023	0.7275 + 0.0025
0.00178	0.7271 + 0.0026	0.7309 + 0.0024
0.00316	0.7316 + 0.0025	0.7271 + 0.0024
0.00562	0.7286 + 0.0027	0.7277 + 0.0023
0.01000	0.7288 + 0.0025	0.7254 + 0.0024
0.01780	0.7329 + 0.0024	0.7296 + 0.0024
0.03160	0.7309 + 0.0026	0.7300 + 0.0026
0.05620	0.7321 + 0.0023	0.7313 + 0.0026
0.10000	0.7364 + 0.0024	0.7299 + 0.0025
0.17800	0.7344 + 0.0026	0.7335 + 0.0023
0.31600	0.7299 + 0.0024	0.7301 + 0.0026
0.56200	0.7139 + 0.0026	0.7118 + 0.0025
0.70000	0.7024 + 0.0025	0.7025 + 0.0027
0.80000	0.7116 + 0.0024	0.7029 + 0.0023
0.90000	0.7177 + 0.0028	0.7142 + 0.0024
1.00000	0.7204 ± 0.0025	0.7187 ± 0.0026

Table 6.4.6-10 Reactivity Results for TRIGA Fuel Cluster Rods, Sealed Can, Accident Conditions, Nonpoisoned Basket

Moderator SG	Casks Touching ($k_{eff} \pm \sigma$)	8 Foot Center-To-Center ($k_{eff} \pm \sigma$)
Dry Exterior and Neutron Shield, Vary Internal Moderator		
0.00000	0.8669 ± 0.0022	0.8756 ± 0.0023
0.00100	0.8725 ± 0.0022	0.8687 ± 0.0022
0.00178	0.8737 ± 0.0022	0.8668 ± 0.0022
0.00316	0.8721 ± 0.0024	0.8744 ± 0.0024
0.00562	0.8703 ± 0.0022	0.8693 ± 0.0024
0.01000	0.8716 ± 0.0022	0.8646 ± 0.0021
0.01780	0.8658 ± 0.0022	0.8614 ± 0.0021
0.03160	0.8620 ± 0.0023	0.8620 ± 0.0021
0.05620	0.8536 ± 0.0022	0.8561 ± 0.0025
0.10000	0.8345 ± 0.0023	0.8373 ± 0.0023
0.17800	0.8138 ± 0.0022	0.8152 ± 0.0024
0.31600	0.7862 ± 0.0021	0.7830 ± 0.0024
0.56200	0.7570 ± 0.0025	0.7500 ± 0.0024
0.70000	0.7439 ± 0.0023	0.7424 ± 0.0027
0.80000	0.7383 ± 0.0025	0.7404 ± 0.0026
0.90000	0.7415 ± 0.0027	0.7391 ± 0.0025
1.00000	0.7398 ± 0.0026	0.7303 ± 0.0026
Optimally Moderated Internal (SG = 0.0), Vary Neutron Shield and Exterior		
0.00000	0.8669 ± 0.0022	0.8756 ± 0.0023
0.00100	0.8620 ± 0.0022	0.7950 ± 0.0023
0.00178	0.8488 ± 0.0022	0.7755 ± 0.0025
0.00316	0.8366 ± 0.0023	0.7509 ± 0.0024
0.00562	0.8209 ± 0.0022	0.7403 ± 0.0024
0.01000	0.7994 ± 0.0023	0.7341 ± 0.0024
0.01780	0.7795 ± 0.0022	0.7272 ± 0.0022
0.03160	0.7618 ± 0.0024	0.7270 ± 0.0025
0.05620	0.7497 ± 0.0025	0.7251 ± 0.0025
0.10000	0.7395 ± 0.0023	0.7238 ± 0.0025
0.17800	0.7300 ± 0.0023	0.7244 ± 0.0025
0.31600	0.7280 ± 0.0024	0.7285 ± 0.0022
0.56200	0.7311 ± 0.0025	0.7283 ± 0.0024
0.70000	0.7322 ± 0.0024	0.7243 ± 0.0025
0.80000	0.7305 ± 0.0025	0.7267 ± 0.0024
0.90000	0.7237 ± 0.0022	0.7324 ± 0.0023
1.00000	0.7286 ± 0.0024	0.7287 ± 0.0025
Vary Interior, Exterior and Neutron Shield Simultaneously		
0.00000	0.8669 ± 0.0022	0.8756 ± 0.0023
0.00100	0.8615 ± 0.0023	0.7989 ± 0.0022
0.00178	0.8550 ± 0.0023	0.7755 ± 0.0025
0.00316	0.8397 ± 0.0022	0.7520 ± 0.0024
0.00562	0.8268 ± 0.0022	0.7439 ± 0.0024
0.01000	0.7988 ± 0.0025	0.7333 ± 0.0025
0.01780	0.7788 ± 0.0024	0.7305 ± 0.0023
0.03160	0.7600 ± 0.0023	0.7259 ± 0.0024
0.05620	0.7510 ± 0.0024	0.7350 ± 0.0024
0.10000	0.7444 ± 0.0024	0.7349 ± 0.0024
0.17800	0.7397 ± 0.0025	0.7298 ± 0.0024
0.31600	0.7284 ± 0.0025	0.7297 ± 0.0024
0.56200	0.7106 ± 0.0022	0.7056 ± 0.0024
0.70000	0.7051 ± 0.0025	0.7004 ± 0.0025
0.80000	0.7146 ± 0.0025	0.7104 ± 0.0027
0.90000	0.7107 ± 0.0025	0.7195 ± 0.0026
1.00000	0.7204 ± 0.0025	0.7251 ± 0.0025

Table 6.4.6-11 Reactivity Results for TRIGA Fuel Cluster Rods, Sealed Cans, Normal Conditions, Poisoned Basket

Moderator SG	Casks Touching ($k_{eff} \pm \sigma$)	8 Foot Center-To-Center ($k_{eff} \pm \sigma$)
Dry Exterior, Vary Internal Density		
0.00000	0.7274 ± 0.0026	0.7319 ± 0.0024
0.00100	0.7342 + 0.0022	0.7283 + 0.0023
0.00178	0.7296 + 0.0024	0.7268 + 0.0023
0.00316	0.7286 + 0.0024	0.7328 + 0.0024
0.00562	0.7294 + 0.0023	0.7277 + 0.0023
0.01000	0.7309 + 0.0022	0.7338 + 0.0024
0.01780	0.7319 + 0.0023	0.7308 + 0.0023
0.03160	0.7338 + 0.0023	0.7334 + 0.0023
0.05620	0.7349 + 0.0024	0.7290 + 0.0023
0.10000	0.7328 + 0.0021	0.7339 + 0.0026
0.17800	0.7346 + 0.0024	0.7339 + 0.0023
0.31600	0.7332 + 0.0026	0.7315 + 0.0023
0.56200	0.7324 + 0.0024	0.7308 + 0.0024
0.70000	0.7245 + 0.0025	0.7304 + 0.0023
0.80000	0.7401 + 0.0025	0.7310 + 0.0024
0.90000	0.7455 + 0.0025	0.7375 + 0.0028
1.00000	0.7573 + 0.0027	0.7593 + 0.0026
Optimally Moderated Cask Interior (SG = 1.0), Vary External Density		
0.00000	0.7274 ± 0.0026	0.7319 ± 0.0024
0.00100	0.7667 + 0.0026	0.7623 + 0.0026
0.00178	0.7635 + 0.0024	0.7652 + 0.0025
0.00316	0.7636 + 0.0026	0.7596 + 0.0027
0.00562	0.7675 + 0.0028	0.7636 + 0.0027
0.01000	0.7697 + 0.0025	0.7661 + 0.0026
0.01780	0.7634 + 0.0025	0.7615 + 0.0029
0.03160	0.7664 + 0.0027	0.7641 + 0.0024
0.05620	0.7635 + 0.0030	0.7688 + 0.0026
0.10000	0.7599 + 0.0029	0.7676 + 0.0024
0.17800	0.7622 + 0.0024	0.7637 + 0.0024
0.31600	0.7620 + 0.0026	0.7690 + 0.0023
0.56200	0.7685 + 0.0030	0.7643 + 0.0028
0.70000	0.7632 + 0.0025	0.7684 + 0.0028
0.80000	0.7645 + 0.0028	0.7657 + 0.0027
0.90000	0.7615 + 0.0028	0.7624 + 0.0027
1.00000	0.7641 + 0.0028	0.7659 + 0.0025
Vary Internal and External Density Simultaneously		
0.00000	0.7274 ± 0.0026	0.7319 ± 0.0024
0.00100	0.7328 + 0.0022	0.7281 + 0.0024
0.00178	0.7279 + 0.0025	0.7297 + 0.0024
0.00316	0.7306 + 0.0023	0.7310 + 0.0023
0.00562	0.7323 + 0.0024	0.7331 + 0.0025
0.01000	0.7291 + 0.0026	0.7291 + 0.0024
0.01780	0.7306 + 0.0024	0.7309 + 0.0024
0.03160	0.7291 + 0.0022	0.7314 + 0.0023
0.05620	0.7292 + 0.0026	0.7299 + 0.0024
0.10000	0.7302 + 0.0026	0.7356 + 0.0025
0.17800	0.7363 + 0.0024	0.7288 + 0.0023
0.31600	0.7366 + 0.0025	0.7316 + 0.0025
0.56200	0.7296 + 0.0026	0.7300 + 0.0025
0.70000	0.7318 + 0.0023	0.7276 + 0.0025
0.80000	0.7350 + 0.0025	0.7385 + 0.0024
0.90000	0.7423 + 0.0027	0.7385 + 0.0024
1.00000	0.7641 ± 0.0028	0.7659 ± 0.0029

Table 6.4.6-12 Reactivity Results for TRIGA Fuel Cluster Rods, Sealed Cans, Accident Conditions, Poisoned Basket

Moderator SG	Casks Touching ($k_{eff} \pm \sigma$)	8 Foot Center-To-Center ($k_{eff} \pm \sigma$)
Dry Exterior and Neutron Shield, Vary Internal Moderator		
0.00000	0.8384 ± 0.0021	0.8375 ± 0.0023
0.00100	0.8394 + 0.0022	0.8343 + 0.0021
0.00178	0.8376 + 0.0022	0.8316 + 0.0022
0.00316	0.8373 + 0.0022	0.8319 + 0.0024
0.00562	0.8399 + 0.0021	0.8336 + 0.0025
0.01000	0.8356 + 0.0022	0.8321 + 0.0023
0.01780	0.8380 + 0.0022	0.8314 + 0.0022
0.03160	0.8302 + 0.0025	0.8208 + 0.0021
0.05620	0.8240 + 0.0021	0.8188 + 0.0024
0.10000	0.8127 + 0.0023	0.8112 + 0.0023
0.17800	0.7993 + 0.0024	0.7936 + 0.0022
0.31600	0.7773 + 0.0024	0.7738 + 0.0027
0.56200	0.7616 + 0.0026	0.7559 + 0.0023
0.70000	0.7570 + 0.0025	0.7578 + 0.0022
0.80000	0.7647 + 0.0026	0.7589 + 0.0025
0.90000	0.7728 + 0.0028	0.7671 + 0.0026
1.00000	0.7802 + 0.0026	0.7803 + 0.0026
Optimally Moderated Internal (SG = 0.0), Vary Neutron Shield and Exterior		
0.00000	0.8384 ± 0.0021	0.8375 ± 0.0023
0.00100	0.8282 + 0.0022	0.7710 + 0.0023
0.00178	0.8210 + 0.0021	0.7593 + 0.0024
0.00316	0.8150 + 0.0022	0.7532 + 0.0023
0.00562	0.7993 + 0.0023	0.7398 + 0.0024
0.01000	0.7882 + 0.0024	0.7336 + 0.0024
0.01780	0.7664 + 0.0026	0.7326 + 0.0024
0.03160	0.7546 + 0.0024	0.7290 + 0.0023
0.05620	0.7480 + 0.0022	0.7285 + 0.0023
0.10000	0.7387 + 0.0022	0.7267 + 0.0022
0.17800	0.7308 + 0.0023	0.7265 + 0.0026
0.31600	0.7324 + 0.0023	0.7310 + 0.0025
0.56200	0.7278 + 0.0025	0.7291 + 0.0022
0.70000	0.7320 + 0.0023	0.7317 + 0.0025
0.80000	0.7320 + 0.0024	0.7268 + 0.0026
0.90000	0.7313 + 0.0025	0.7291 + 0.0026
1.00000	0.7329 + 0.0025	0.7329 + 0.0025
Vary Interior, Exterior and Neutron Shield Simultaneously		
0.00000	0.8384 ± 0.0021	0.8375 ± 0.0023
0.00100	0.8269 + 0.0024	0.7802 + 0.0024
0.00178	0.8258 + 0.0021	0.7625 + 0.0022
0.00316	0.8089 + 0.0022	0.7525 + 0.0023
0.00562	0.7928 + 0.0022	0.7409 + 0.0025
0.01000	0.7825 + 0.0023	0.7308 + 0.0025
0.01780	0.7721 + 0.0023	0.7305 + 0.0026
0.03160	0.7552 + 0.0023	0.7327 + 0.0023
0.05620	0.7457 + 0.0023	0.7283 + 0.0025
0.10000	0.7420 + 0.0024	0.7343 + 0.0025
0.17800	0.7365 + 0.0023	0.7322 + 0.0026
0.31600	0.7379 + 0.0024	0.7333 + 0.0024
0.56200	0.7292 + 0.0026	0.7333 + 0.0022
0.70000	0.7286 + 0.0023	0.7307 + 0.0027
0.80000	0.7334 + 0.0023	0.7292 + 0.0023
0.90000	0.7516 + 0.0026	0.7517 + 0.0024
1.00000	0.7608 ± 0.0029	0.7608 ± 0.0029

Table 6.4.6-13 Single Package 10 CFR 71.55(b)(3) Evaluation k_{eff} Summary, TRIGA Fuel Cluster Rod, Nonpoisoned Basket

Description	$k_{eff} \pm \sigma$	k_s
Single Cask / Inner Shell Reflected with H_2O	0.73003 ± 0.00254	0.75191
Single Cask / Inner Shell and Lead Reflected with H_2O	0.76100 ± 0.00243	0.78266
Single Cask / Inner Shell, Lead & Outer Shell Reflected with H_2O	0.76366 ± 0.00240	0.78526
Single Intact Cask Reflected with H_2O	0.76360 ± 0.00273	0.78586

Table 6.4.6-14 Single Package 10 CFR 71.55(b)(3) Evaluation k_{eff} Summary, TRIGA Fuel Cluster Rod, Poison Basket

Description	$k_{eff} \pm \sigma$	k_s
Single Cask / Inner Shell Reflected with H_2O	0.76615 ± 0.00265	0.78825
Single Cask / Inner Shell and Lead Reflected with H_2O	0.80117 ± 0.00287	0.82371
Single Cask / Inner Shell, Lead & Outer Shell Reflected with H_2O	0.80106 ± 0.00250	0.82286
Single Intact Cask Reflected with H_2O	0.79815 ± 0.00228	0.81951

Table 6.4.6-15 Increased Fuel Dimensional Parameter k_{eff} Summary, TRIGA Fuel Cluster Rod, Nonpoisoned Basket

Description	$k_{eff} \pm \sigma$	k_s
Base Case (Section 6.4.6.3)	0.8756 ± 0.0023	0.8970
22.5-inch Active Fuel Height 0.015-inch Cladding Thickness 0.52-inch Fuel Pellet Diameter	0.8793 ± 0.0024	0.9009
22.5-inch Active Fuel Height 0.015-inch Cladding Thickness 0.53-inch Fuel Pellet Diameter	0.8876 ± 0.0021	0.9086

Table 6.4.6-16 TRIGA Cluster Rod Reactivities – Accident Conditions

	HEU			LEU		
	Cask Cavity	k_{eff}	σ	Cask Cavity	k_{eff}	σ
Intact Fuel	Dry (0 g/cc)	0.86414	0.00112	Wet (0.9882 g/cc)	0.77727	0.00121
Damaged Fuel	Dry (0 g/cc)	0.91119	0.00117	Dry (0 g/cc)	0.84872	0.00109

Table 6.4.6-17 TRIGA Cluster Rod Reactivities – Normal Conditions

Description	k_{eff}	σ
HEU - Dry Normal Condition Array	0.56007	0.00114
HEU - Dry Cask Cavity - Preferential Flooded Can - Normal Condition Array	0.74210	0.00132
LEU - Dry Normal Condition Array	0.44760	0.00094
LEU - Dry Cask Cavity - Preferential Flooded Can - Normal Condition Array	0.71750	0.00123

Table 6.4.6-18 TRIGA Cluster Rod Reactivities – Single Cask with Containment Fully Water Reflected

Description	k_{eff}	σ
HEU - Dry Cask Cavity - Preferential Flooded Can	0.74059	0.00120
LEU - Dry Cask Cavity - Preferential Flooded Can	0.71063	0.00117

Table 6.4.6-19 Summary of TRIGA Cluster Rod Maximum Reactivity Configuration

Fuel Material Configuration	HEU			LEU		
	k_{eff}	σ	k_s	k_{eff}	σ	k_s
Accident Array – Preferentially Flooded	0.91119	0.00117	0.93033	0.84872	0.00109	0.86770
Normal Array – Preferentially Flooded	0.74210	0.00132	0.76154	0.71750	0.00123	0.73676
Normal Array – Dry	0.56007	0.00114	0.57915	0.44760	0.00094	0.46628
Single Cask Fully (Water) Reflected	0.74059	0.00120	0.75979	0.71063	0.00117	0.72977

Table 6.4.6-20 Licensing Parameters for TRIGA Cluster Rods

Parameter	Value
Fuel Form	U-ZrH_x
Number of Rods Per Basket Opening	16
Clad Material	Incoloy
HEU Max. Enrichment (wt % ^{235}U)	95
HEU Min. U in Fuel Meat (wt %)	9.5[1]
HEU Max ^{235}U Per Rod (g)	46.5
LEU Max. Enrichment (wt % ^{235}U)	20
LEU Min. U in Fuel Meat (wt %)	43[2]
LEU Max ^{235}U Per Rod (g)	55
Maximum Hydrogen to Zirconium Ratio	1.70
Maximum Pellet Diameter (inch)	0.53
Minimum Clad Thickness (inch)	0.015
Maximum Active Fuel Length (inch)	22.5

[1] Equivalent to 457 grams zirconium.
[2] Equivalent to 357 grams zirconium

Chapter 7

Table of Contents

7 OPERATING PROCEDURES 7.1-1
7.1 Procedures for Loading Packages 7.1-2
7.1.1 Procedures for Wet Loading of LWR Fuel Assemblies and Canistered LWR Fuel Rods 7.1-3
7.1.2 Procedures for Dry Loading of Metallic Fuel 7.1-7
7.1.3 Procedures for Loading Metallic Fuel and Filters Containing Severely Damaged Metallic Fuel into Damaged Fuel Canisters 7.1-10
7.1.4 Procedures for Dry Loading of DIDO, Spiral, MOATA and MTR Fuel Elements in Basket Modules into the NAC-LWT Cask 7.1-13
7.1.5 MTR General and Preferential Loading Procedures 7.1-18
7.1.6 Procedure for Dry Loading of TRIGA Fuel Basket Modules and GA IFM Modules into the NAC-LWT Cask 7.1-33
7.1.7 Procedure for Loading TRIGA Damaged Fuel or Fuel Debris into a TRIGA Sealed Damaged Fuel Can (DFC) 7.1-38
7.1.8 Procedure for Wet Loading of PWR/BWR Fuel Rods into the PWR/BWR Transport Canister 7.1-39
7.1.9 Procedure for Wet Loading of TPBAR Consolidation Canister into the NAC-LWT Cask 7.1-40
7.1.10 Procedure for the Dry Loading of PULSTAR Fuel Into the NAC-LWT Cask 7.1-44
7.1.11 Procedure for Dry Loading of TPBAR Waste Container 7.1-48
7.2 Procedures for Unloading Package 7.2-1
7.2.1 Procedures for Wet Unloading of LWR Fuel 7.2-1
7.2.2 Procedures for Wet Unloading of Metallic Fuel 7.2-3
7.2.3 Procedure for Wet Unloading of MTR, TRIGA, DIDO, ANSTO or PULSTAR Fuel Basket Contents 7.2-5
7.2.4 Procedure for Dry Unloading of MTR, TRIGA, DIDO, ANSTO or PULSTAR Fuel Contents 7.2-8
7.2.5 Procedure for Dry Unloading of TPBAR Contents 7.2-10
7.3 Procedures for Preparation of the Empty Package for Transport 7.3-1

List of Figures

Figure 7.1-1 MTR Fuel Basket Module Loading Pattern (Top View) 7.1-22
Figure 7.1-2 LEU MTR Fuel Basket Loading Guidelines for 30 W Uniform Loading 7.1-23
Figure 7.1-3 MEU MTR Fuel Basket Loading Guidelines for 30 W Uniform Loading 7.1-24
Figure 7.1-4 HEU MTR Fuel Basket Loading Guidelines for 30 W Uniform Loading – Maximum 380 grams ^{235}U 7.1-25
Figure 7.1-5 HEU MTR Fuel Basket Loading Guidelines for 30 W Uniform Loading – Maximum 460 grams ^{235}U 7.1-26
Figure 7.1-6 HEU MTR Fuel Basket Loading Guidelines for Preferential Loading – Maximum 380 grams ^{235}U 7.1-27
Figure 7.1-7 HEU MTR Fuel Basket Loading Guidelines for Preferential Loading – Maximum 460 grams ^{235}U 7.1-28
Figure 7.1-8 DIDO LEU Cooling Time vs. Fuel Burnup Basket Module Loading Guidelines for Uniform Loading 7.1-29
Figure 7.1-9 DIDO MEU Cooling Time vs. Fuel Burnup Basket Module Loading Guidelines for Uniform Loading 7.1-30
Figure 7.1-10 DIDO HEU Cooling Time vs. Fuel Burnup Basket Module Loading Guidelines for Uniform Loading 7.1-31
Figure 7.1-11 Bounding DIDO Element Minimum Cool Time vs. wt % ^{235}U Depletion 7.1-32

List of Tables

Table 7.3-1 Bolt and Torque Table 7.3-2

7 OPERATING PROCEDURES

This chapter describes the generic operating procedures for loading, unloading and preparing the NAC-LWT package for transport. These procedures shall be implemented to ensure the package is used in accordance with Certificate of Compliance (CoC) No. 9225 for the NAC-LWT packaging.

These procedures are based on generic site conditions and assume that the package arrives at the handling site with the appropriate internals installed in the cask. Additional operations and/or modifications (i.e., sequence of operations, use of parallel operations, etc.) to these procedures to address site-specific conditions may be required for each user's facility. These additional operations and/or modifications will be documented in site-specific procedures.

In addition, site-specific procedures may incorporate signoffs for activities or operational sequences as they are performed. Oversight organizations, such as Quality Assurance or Quality Control, may participate in certain package handling operations. The use of signoffs can assist the user in assuring that critical steps are not overlooked, that the package is handled in accordance with the CoC and Safety Analysis Report (SAR), and that appropriate records are retained as required by 10 CFR 71.91.

The NAC-LWT package is designed and certified to transport numerous fissile and radioactive contents, as described in the CoC, as a Type B(U)F-96 package. Certain radioactive contents, such as damaged TRIGA fuel and fuel debris loaded in sealed damaged fuel cans (DFCs), are required to be transported in a NAC-LWT assembled and tested in a leaktight containment configuration.

The NAC-LWT is also certified for the transport of Tritium Producing Burnable Absorber Rod (TPBAR) contents, as described in the CoC, as a Type B(M)-96 package. NAC-LWT cask units designated for the transport of TPBAR contents shall be configured with Alternate B vent and drain port covers in accordance with the license drawings, and subjected to the additional hydrostatic test per the requirements of Section 8.1.2. TPBAR transports shall be performed with a leaktight containment boundary.

Loaded shipments received at U.S. Department of Energy (DOE) facilities shall be receipt surveyed and monitored in accordance with DOE regulations. As required, the shipper will be notified of any survey or shipping discrepancy and the shipper will ensure appropriate regulatory notifications are completed.

When the package is handled in accordance with the procedures provided herein, and is loaded within the conditions of the CoC and the SAR, the resulting occupational exposures will be maintained as low as reasonably achievable (ALARA), as required by 10 CFR 20.

7.1 Procedures for Loading Packages

For the shipment of loaded packages, the cavity shall be dry, the contents and nameplate package identification, corresponding to the contents, shall be verified as correct, and the other applicable conditions of the Certificate of Compliance (CoC) shall be verified as met. Site-specific procedures for dry handling and loading of fuel assemblies and other authorized contents will be prepared to incorporate the dry transfer system components required to safely and efficiently load the NAC-LWT at each loading facility. Dry loading and transfer procedures are not specifically described in the individual loading procedures due to these facility and required equipment variations. Content configurations may require spacers, baskets, basket inserts, canisters, etc., to support and/or control the content geometry during transport. The transport configurations identifying the specific contents and components required are specified in the license drawings. Solid, irradiated and contaminated hardware will generally be loaded wet utilizing the procedure guidance of Section 7.1.1. Alternatively, the solid, irradiated and contaminated hardware can be loaded dry utilizing dry loading procedures (i.e., per Section 7.1.2 or 7.1.1) modified to the requirements of the dry loading facilities.

Two port cover designs are available for use. The alternate port cover has an O-ring along the barrel and an O-ring on the inner end of the port cover. The alternate port cover was developed to facilitate ease of installation and removal in the field. The second port cover design is the Alternate B port cover that has two face seals on the inner end of the port cover. The Alternate B port cover was developed to provide a leaktight and high-pressure containment boundary seal per the requirements of ANSI N14.5-1997. The Alternate B port cover is required to be installed for the transport of TPBAR contents and other authorized contents requiring a leaktight containment capability (e.g. damaged TRIGA fuel and fuel debris). The two port cover designs can be used interchangeably for authorized contents not requiring a leaktight or high-pressure containment boundary capability.

The alternate port cover bolts are torqued to 100 ± 10 inch-pounds. The Alternate B port cover bolts are torqued to 285 ± 15 inch-pounds to ensure compression of the metallic containment O-ring seal.

As required for the specific contents, specific procedures will specify the use of the Alternate B port covers. In these loading procedures, the more restrictive Alternate B port cover helium leakage rate testing is described. For other content loading procedures, either port cover design

can be used. However, if the Alternate B port covers are used, the metallic O-ring seal will be replaced for each transport and the helium maintenance leakage rate test is required to be performed.

For cask loading operations performed under water or when water is introduced into the cask cavity, the cask cavity is required to be blown down to remove the cavity water, vacuum dried and verified as dry, and helium backfilled prior to final closure and leakage testing. The cavity is vacuum dried by attaching a vacuum pump to the vent and/or drain port and evacuating the cavity to a pressure of less than 10 torr (13 mbar), and continuing to vacuum pump for an additional 15 minutes. If the cavity pressure rise is less than 5 torr (6.7 mbar) during a 10-minute isolation and hold period, there is no free water in the cavity and the cask cavity is verified as dry. Final containment closure and leakage testing operations in preparation for transport can proceed. If the pressure rise is >5 torr (6.7 mbar), the vacuum drying will be continued until the dryness verification criteria are met. The successful performance of the dryness verification and backfilling the cavity with helium ensures that there is no free water in the cavity and oxidation of the cask's contents is precluded. When the cask is loaded in a dry cell or under other conditions where no water is introduced into the cask cavity, the procedure sequences for cavity blow down, vacuum drying and dryness verification can be eliminated and the loading sequence can proceed directly to final closure, containment boundary leakage testing and helium backfill operations.

7.1.1 Procedures for Wet Loading of LWR Fuel Assemblies and Canistered LWR Fuel Rods

The procedures for wet loading the NAC-LWT with LWR fuel are as follows:

1. Perform a receipt inspection of the empty cask and trailer/ISO container, inspecting for transport damage.
2. Position the trailer in the designated cask unloading area. Set the trailer brakes and chock the wheels to prevent unintended movement. If site-specific conditions exist that require the trailer to move to allow the cask to be uprighted on its rotation trunnions, release brakes and remove the chocks when required to complete uprighting operations. If an ISO container is used, it may be removed from the trailer and secured in the unloading area.
3. Remove the personnel barrier or the roof and roof cross-members from the ISO container.

   Note: Verify that the package nameplate displays the correct package identification number in accordance with the CoC.
4. Perform a Health Physics survey of the cask and adjacent surfaces of the trailer.

Note: A receiving survey of the cask and transporter must be performed as soon as practicable after arrival at the site to assure compliance with 10 CFR 20, 10 CFR 71.87(i) and 10 CFR 71.47, and to assure timely reporting of any reportable noncompliance.

5. Remove the top and bottom impact limiters.
6. Remove the cask tie-down strap.
7. Using the lifting yoke with the guides removed, engage the lifting trunnions. Raise the cask to vertical by rotating the cask rotation sockets on the rear cask supports, moving the crane and/or trailer as required to keep the lift yoke engaged to the trunnions and the cask engaged in the rear supports. When the cask is fully vertical, lift the cask from the supports and remove it from the trailer/container.
8. Place the cask in the cask preparation area or other designated location. Disengage the lifting yoke. Clean cask surfaces of road dirt as required for entry into the spent fuel pool.
9. Visually inspect the neutron shield tank fill, drain and level inspection plugs for signs of neutron shield fluid leakage. If leakage is detected or suspected, verify shield tank fluid level and correct, as required.
10. Remove the vent and drain valve port covers. Prior to reinstallation of the port covers, carefully inspect the valve port cover O-ring seals and, if the O-rings show any damage, replace them with approved spares. Ensure that the replacement O-rings are properly installed and seated. Visually inspect the valved quick-disconnect nipples and replace them, if necessary.

    Note: For Alternate B port covers, replace the metallic O-ring with an approved spare prior to reinstallation.

11. Remove closure lid bolts. Attach the lid lift slings to the closure lid. Remove the closure lid and set it on a support that is suitable for radiological control and for maintaining the cleanliness of the closure lid. Prior to reinstallation of the lid, carefully inspect the Teflon O-ring seal in the underside of the closure lid and, if it shows any damage, replace it. Remove the metallic O-ring and replace it with an approved spare. Ensure that the replacement O-rings are properly installed and seated. Inspect the lid bolts and replace any that are damaged.
12. Visually inspect the inner cavity for foreign material or damage. Install or verify the presence of the proper drain tube and basket assembly.
13. Fill the cask cavity with clean water.
14. Install lift yoke arm guides and remote actuation component on the cask lifting yoke.
15. Engage the cask lifting yoke with the cask lifting trunnions and pick up the cask. Carefully lower the cask to the bottom of the cask loading area. Rinse the cask surfaces with clean water to minimize cask surface contamination.
16. Disengage the lifting yoke from the cask and remove the yoke from the pool, if necessary, to provide fuel loading clearance.

17. Identify the fuel assembly(ies) or canistered LWR fuel rods to be loaded. Verify the identified materials comply with the content conditions and authorized quantities as specified in the CoC.

18. Pick up the fuel assembly or transport canister containing individual fuel rods, using the required grapple system.

    Note: See Section 7.1.8 procedures for instructions for loading and preparing PWR or BWR rods in a transport canister.

19. Position the fuel contents over the cask and carefully lower them into the cask to avoid damage to the cask sealing surfaces. Confirm that the fuel assembly (or transport canister and insert, or material container) is fully seated, then release the grapple from the fuel assembly (or transport canister and insert) and raise the grapple to the full up position. Repeat this step as necessary to load multiple assemblies or containers (if required).

20. Position the cask lifting yoke over the cask closure lid. Attach the slings to the closure lid and cask lifting yoke. Lower the yoke over the cask.

21. Position the closure lid over the cask and slowly lower it into place using the cask and lid match marks as guides. Visually confirm that the closure lid is seated.

22. Lower the cask handling yoke to slack the closure lid cables. Engage the cask lifting trunnions with the yoke and begin lifting.

    Note: Visually verify the yoke engagement before lifting the cask.

23. Raise the cask until the lid is slightly above the surface of the pool. At the option of the licensee/user, a number of closure lid bolts (i.e., 4 to 12) may be installed hand tight.

24. Raise the cask clear of the pool, rinsing the yoke and cask with clean water.

25. Transfer the cask to the decontamination pit or other work area. Remove the yoke and lid lift slings.

26. Install and tighten the 12 closure lid bolts to 260 ± 20 ft-lb in three passes, using the torque sequence stamped on the closure lid.

27. At the option of the licensee/user, a 25 to 50 gallon clean water flush of the cask cavity may be performed by connecting a valved, clean water line to the drain valve and a valved drain line to the vent valve. After the cavity flushing is completed, if performed, disconnect the water supply and drain lines.

28. Connect a gas supply line to the vent valve and the drain line to the drain valve.

29. Open the nitrogen or helium gas supply valve and pressurize the cask cavity (< 30 psig) to force any residual water out the drain line. Continue to supply pressurized gas to the cask for a minimum of five minutes after the last residual free water discharges from the drain. Remove the drain and gas supply lines and attach a vacuum drying system (VDS) to the vent.

30. Evacuate the cask cavity to less than or equal to 10 torr (13 mbar) and continue vacuum pumping for a minimum of 15 minutes.

31. At the end of the vacuum pumping period, isolate the cask cavity from the vacuum pump and stop the vacuum pump. Monitor the cask cavity pressure for a minimum of 10 minutes. If the pressure rise is less than 5 torr (6.7 mbar), the cavity is verified as dry of free water. If the pressure rise is >5 torr (6.7 mbar), repeat vacuum drying until the dryness verification results are satisfactory.

32. Backfill the cask cavity with helium to 0 psig (1 atmosphere, absolute), +1, -0 psi and disconnect the VDS from the vent valve.

33. Perform a helium leakage test of the closure lid containment O-ring using a Helium Mass Spectrometer Leak Detector (He MSLD) in accordance with the procedural requirements of Section 8.1.3.1, Steps 3 through 10.

34. Install the vent and drain alternate port covers and torque the bolts to 100 ±10 inch-pounds.

35. If an alternate port cover containment O-ring seal was replaced, perform a helium leakage test on the affected port cover using a He MSLD in accordance with the requirements of Section 8.1.3.2.2.

36. If the alternate port cover containment seal was inspected and accepted for reuse, perform a gas pressure drop leakage test on the affected port cover as follows.

    a. Install a pressure test fixture to the port cover test port, including a calibrated pressure gauge with a minimum sensitivity of 0.25 psi.

    b. Pressurize the port cover seal annulus to 15 psig, +1, -0 psi.

    c. Isolate the gas supply and observe the pressure gauge for a minimum of five minutes.

    d. The acceptance criterion for the test is no measurable drop in pressure during the minimum test time. An acceptable test assures that the minimum assembly verification leakage test sensitivity is achieved.

    Note: Alternate B port covers, if used, require the satisfactory completion of a helium maintenance leakage rate test to confirm a leaktight seal condition for each loaded transport. Install the Alternate B port cover, torque the high-strength bolts to 285 ± 15 inch-pounds, and perform the maintenance leakage rate test per the requirements of Section 8.1.3.3.

37. Decontaminate the cask surfaces. Survey the cask for surface contamination and radiation dose rates.

    Note: Ensure compliance with 10 CFR 71.87(i) and 10 CFR 71.47.

38. Remove lift yoke arm guides. Engage the cask lifting yoke to the lifting trunnions.

39. Lift the cask and position the cask rotation sockets in the rear rotation trunnions of the rear support structure. Carefully lower the cask to the horizontal transport orientation resting on the front saddle by moving the crane and/or the trailer as required to maintain cask engagement to the rear supports.

40. Disengage the lifting yoke from the lifting trunnions and remove it from the area.

41. Install the cask tie-down strap. Install the top and bottom impact limiters.
42. Install tamper seal wire and number seal on the top attachment point on the top impact limiter.
43. Install ISO container bracing and lid or personnel barrier.
44. Complete radiation and contamination surveys of the external surfaces of the package and record the data. Ensure removable contamination and radiation dose rate survey results comply with the limits specified in 10 CFR 71.87(i) and (j).
45. Measure the dose rate in millirems per hour at one meter from the package surface to determine the Transport Index (TI). Indicate the TI on the Radioactive Material labels applied to the package in accordance with 49 CFR 172, Subpart E.
46. Determine the appropriate Criticality Safety Index (CSI) assigned to the package contents in accordance with the CoC, and indicate the correct CSI on the Fissile Material label applied to the package per 49 CFR 172, Subpart E.
47. Apply appropriate placards to the transport vehicle in accordance with 49 CFR 172, Subpart F.
48. Complete the shipping documents and provide the carrier with instructions regarding the requirements for maintaining an exclusive use shipment.

7.1.2 Procedures for Dry Loading of Metallic Fuel

The procedures for dry loading the package with metallic fuel are as follows:

1. Perform a receipt inspection of the empty cask and trailer/ISO container, inspecting for transport damage.
2. Position the trailer in the designated cask unloading area. Set the trailer brakes and chock the wheels to prevent unintended movement. If site-specific conditions exist that require the trailer to move to allow the cask to be uprighted on its rotation trunnions, release brakes and remove the chocks when required to complete uprighting operations. If an ISO container is used, it may be removed from the trailer and secured in the unloading area.
3. Remove the roof from the ISO container and open the front and rear ISO doors. Remove roof cross-members, if installed.

   Note: Verify that the package nameplate displays the correct package identification number in accordance with the CoC.
4. Perform a Health Physics survey of the cask and adjacent surfaces of the container.

   Note: A receiving survey of the cask and transporter must be performed as soon as practicable after arrival at the site to ensure compliance with 10 CFR 20, 10 CFR 71.87(i) and 10 CFR 71.47, and to ensure timely reporting of any reportable noncompliance.
5. Remove the top and bottom impact limiters.

6. Remove the cask tie-down strap.

7. Using the lifting yoke with the guides removed, engage the lifting trunnions. Raise the cask to vertical by rotating the cask rotation sockets on the rear cask supports, moving the crane and/or trailer as required to keep the lift yoke engaged to the trunnions and the cask engaged in the rear supports. When the cask is fully vertical, lift the cask from the supports and remove it from the trailer/container.

8. Place the cask in the dry loading stand. Disengage the lifting yoke.

9. Remove the vent and drain valve port covers. Prior to reinstallation of the port covers, carefully inspect the O-rings and, if the O-rings show any damage, replace them with approved spares. Ensure that the replacement O-rings are properly installed and seated. Visually inspect the valved quick-disconnect nipples and replace them, if necessary.

   Note: For Alternate B port covers, replace the metallic O-ring with an approved spare prior to reinstallation.

10. Remove closure lid bolts. Attach the lid lift slings to the closure lid. Remove the closure lid and set it on a support that is suitable for radiological control and for maintaining the cleanliness of the closure lid. Prior to reinstallation of the lid, carefully inspect the Teflon O-ring seal in the underside of the closure lid and, if it shows any damage, replace it. Remove the metallic O-ring and replace it with an approved spare. Ensure that the replacement O-rings are properly installed and seated. Inspect the lid bolts and replace any that are damaged.

11. Visually inspect the inner cavity for foreign material or damage. Install, or verify the presence of the proper drain tube assembly and basket, as required.

12. Install the required dry transfer system components to the top of the cask.

13. Position the shielded transfer cask system components for fuel loading, as appropriate.

14. Identify the fuel to be loaded and verify that the fuel contents comply with the content conditions and authorized quantities as specified in the CoC. Up to five sound metallic fuel rods may be placed in an unsealed canister. Damaged rods may be placed in a sealed 2.75-inch or 4.0-inch failed fuel canister (FFC). Up to 10 filters containing oxide powder from severely damaged metallic fuel rods may be placed in one FFC. The FFC(s) containing filters may be loaded with up to two FFCs containing failed fuel rods to fill the three–element basket. The FFCs must be vacuum dried and sealed as described in Section 7.1.3.

15. Load the shielded transfer cask with the selected fuel contents.

16. Place the shielded transfer cask, containing a fuel canister, onto the dry transfer system components positioned on the top of the cask.

17. Lower the fuel canister from the transfer cask into the shipping cask.

18. Repeat the loading and transfer of fuel canisters until the approved cask loading plan is completed.

19. Install the closure lid onto the cask. Visually verify that the lid is properly seated.

20. Remove the dry transfer system components from the top of the cask.

21. Install and tighten the 12 closure lid bolts to 260 ± 20 ft-lb in three passes, using the torque sequence stamped on the closure lid.

22. This step applies only if the cask contains damaged metallic fuel or severely damaged metallic fuel.

    a. Attach the vacuum pump to the cask vent valve.

    b. Evacuate the cask cavity to ≤ 10 torr (13 mbar) and maintain for a minimum of 15 minutes.

    c. Stop the vacuum pump and monitor pressure for a minimum of 10 minutes. If the pressure rise is less than 5 torr (6.5 mbar), the cask is adequately dried for shipment. If not, repeat vacuum drying and pressure rise verification.

    d. Remove the vacuum pump and backfill the cask cavity with helium to 1 atmosphere (absolute) +1, -0 psi.

    e. Remove the gas supply line.

23. Perform the helium mass spectrometer leakage rate test on the cask lid in accordance with the requirements of Section 8.1.3.1, Steps 3 through 10.

24. Install the vent and drain alternate port covers and torque the bolts to 100 ±10 inch-pounds.

25. If an alternate port cover containment O-ring seal was replaced, perform a helium leakage test on the affected port cover using a He MSLD in accordance with the requirements of Section 8.1.3.2.2.

26. If the alternate port cover containment seal was inspected and accepted for reuse, perform a gas pressure drop leakage test on the affected port cover as follows.

    a. Install a pressure test fixture to the port cover test port, including a calibrated pressure gauge with a minimum sensitivity of 0.25 psi.

    b. Pressurize the port cover seal annulus to 15 psig, +1, -0 psi.

    c. Isolate the gas supply and observe the pressure gauge for a minimum of five minutes.

    d. The acceptance criterion for the test is no measurable drop in pressure during the minimum test time. An acceptable test assures that the minimum assembly verification leakage test sensitivity is achieved.

Note: Alternate B port covers, if used, require the satisfactory completion of a helium maintenance leakage rate test to confirm a leaktight seal condition for each loaded transport. Install the Alternate B port cover, torque the high-strength bolts to 285 ± 15 inch-pounds, and perform the maintenance leakage rate test per the requirements of Section 8.1.3.3.

27. Decontaminate the cask. Survey the cask for surface contamination and radiation dose rates.

    Note: Ensure compliance with 10 CFR 71.87(i) and 10 CFR 71.47.

28. Remove lift yoke arm guides. Engage the cask lifting yoke to the lifting trunnions.

29. Lift the cask and position the cask rotation sockets in the rear rotation trunnions of the rear support structure. Carefully lower the cask to the horizontal transport orientation resting on the front saddle by moving the crane and/or the trailer as required to maintain cask engagement to the rear supports.

30. Disengage the lifting yoke from the lifting trunnions and remove it from the area.

31. Install the cask tie-down strap. Install the top and bottom impact limiters.

32. Install tamper seal wire and number seal on the top attachment point on the top impact limiter.

33. Install ISO container bracing and lid or personnel barrier.

34. Complete radiation and contamination surveys of the external surfaces of the package and record the data. Ensure removable contamination and radiation dose rate survey results comply with the limits specified in 10 CFR 71.87(i) and (j).

35. Measure the dose rate in millirems per hour at one meter from the package surface to determine the Transport Index (TI). Indicate the TI on the Radioactive Material labels applied to the package in accordance with 49 CFR 172, Subpart E.

36. Determine the appropriate Criticality Safety Index (CSI) assigned to the package contents in accordance with the CoC, and indicate the correct CSI on the Fissile Material label applied to the package per 49 CFR 172, Subpart E.

37. Apply appropriate placards to the transport vehicle in accordance with 49 CFR 172, Subpart F.

38. Complete the shipping documents and provide the carrier with instructions regarding the requirements for maintaining an exclusive use shipment.

7.1.3 Procedures for Loading Metallic Fuel and Filters Containing Severely Damaged Metallic Fuel into Damaged Fuel Canisters

7.1.3.1 Small Diameter Canisters (Damaged Metallic Fuel)

1. Examine the small diameter failed fuel canister (FFC) and check it for damage.

2. Place the FFC inside the containment barrier portion of the pool. Position the FFC in the failed rod loading station.

3. After verifying the accountability records, place the designated failed fuel rod into the FFC. If the rod is broken into two or more pieces, verify that the lid thread and seal area is not fouled during rod insertion.

4. When the can is loaded, install the lid using the FFC Lid Installation Tool.
5. Using the FFC handling tool, move the loaded FFC through the containment barrier door and place the FFC horizontally into the upender.
6. Operate the hand winch to move the FFC to the vertical position.
7. Torque the FFC lid to 100 ± 10 ft-lb for the small canister.
8. Connect the nitrogen supply line to the vent valve.
9. Open nitrogen supply valve and pressurize the FFC to force out the water. Blow gas through the FFC for at least 5 minutes after the first visible bubbles appear. Remove the gas supply line.
10. Invert the FFC in the upender and install the pipe plug.
11. Re-invert the FFC in the upender.
12. Attach the vacuum pump to the FFC vent valve. Evacuate the FFC to a pressure below 25 torr (33 mbar) for a minimum of 15 minutes. Remove the vacuum pump and backfill with nitrogen.
13. Remove the FFC from the upender and place it into temporary storage.

7.1.3.2 Large Diameter Canisters (Damaged Metallic Fuel)

1. Examine the large diameter FFC and check it for damage.
2. Place the FFC inside the containment barrier portion of the pool. Position the FFC in the failed rod loading station.
3. This step is to be used when loading up to three uncanned or canned fuel rods into the large diameter canister. After verifying the accountability records, remove the ceramic filter from the top of the original failed rod can. Position the can plug with aluminum screen onto the open can. Install the plug.
4. Verify the accountability records for the fuel to be loaded.
5. Place the designated fuel into the FFC. If the rod is broken into two or more pieces, verify that the lid thread and seal area is not fouled during rod or can insertion. If more than one failed rod is to be installed, repeat steps 3 through 5.
6. After the canister is loaded with fuel, install the lid using the FFC Lid Installation Tool.
7. Using the FFC handling tool, move the loaded FFC through the containment barrier door and place the FFC horizontally into the upender.
8. Operate the hand winch to move the FFC to the vertical position.
9. Torque the FFC lid to 130 ± 10 ft-lb for the large canister.
10. Connect the nitrogen supply line to the vent valve.

11. Open the nitrogen supply valve and pressurize the FFC to force out the water. Blow gas through the FFC for at least 5 minutes after the first visible traces of bubbles appear. Remove the gas supply line.
12. Invert the FFC in the upender and install the pipe plug.
13. Reinvert the FFC in the upender.
14. Attach the vacuum pump to the FFC vent valve. Evacuate the FFC to a pressure below 25 torr (33 mbar) for a minimum of 15 minutes. Remove the vacuum pump and backfill with nitrogen.
15. Remove the FFC from the upender and place it into temporary storage.

7.1.3.3 Large Diameter Canisters (Severely Damaged Metallic Fuel)

1. Examine the large diameter FFC and check it for damage.
2. Place the FFC inside the containment barrier portion of the pool. Position the FFC in the failed rod loading station.
3. Verify the accountability records for the fuel in the filter set (up to 10 filters) to be loaded into the FFC.
4. After verifying the accountability records, load the filter set into the FFC and place aluminum wool on top of the last filter.
5. Verify that the lid thread and seal area is not fouled during insertion of the filter set.
6. After the canister is loaded with fuel, insert the lid using the FFC Lid Installation Tool.
7. Using the FFC handling tool, move the loaded FFC through the containment barrier door and place the FFC horizontally into the upender.
8. Operate the hand winch to move the FFC to the vertical position.
9. Torque the FFC lid to 130 ± 10 ft-lb for the large canister.
10. Connect the nitrogen supply line to the vent valve.
11. Open the nitrogen supply valve and pressurize the FFC to force out the water. Continue to blow gas through the FFC for at least 5 minutes after the first visible traces of bubbles appear. Remove the gas supply line.
12. Invert the FFC in the upender and install the pipe plug.
13. Re-invert the FFC in the upender.
14. Attach the vacuum pump to the FFC vent valve. Evacuate the FFC to a pressure below 25 torr (33 mbar) for a minimum of 15 minutes. Remove the vacuum pump and backfill with nitrogen.
15. Remove the FFC from the upender and place it into temporary storage.

7.1.4 Procedures for Dry Loading of DIDO, Spiral, MOATA and MTR Fuel Elements in Basket Modules into the NAC-LWT Cask

This procedure presents the steps for dry loading of fuel basket modules into the NAC-LWT cask using a transfer cask, which can contain various types of reactor fuel elements such as MTR, DIDO, spiral and plate assemblies (i.e., MOATA elements). The design, materials, use and function of the various modular fuel basket assemblies such as MTR, DIDO and ANSTO are similar, and all can be loaded into the NAC-LWT utilizing these procedures.

The modular fuel basket assemblies all consist of three types of modules: a base module, intermediate modules, and a top module. Each basket module contains seven fuel element locations, consisting of a center cell and six peripheral cells. The top basket module interfaces with the cask lid to limit the axial movement of the basket assembly. The base module interfaces with the bottom of the cask cavity. The base and intermediate modules are provided with guide pins to provide for and maintain the proper alignment between basket modules. Each of the basket module types is provided with a guide bar assembly to provide for the proper interface of the basket assembly with the drain tube assembly.

Depending on the fuel type, the basket assembly may consist of 4, 5 or 6 modules, with a varying number of intermediate modules. For the DIDO, MOATA and spiral fuel types, the DIDO and ANSTO (the basket assembly identification for MOATA and spiral fuel types) basket assemblies consist of a top module, four intermediate modules and a base module. In the case of MTR fuel elements, the basket assembly can include 2, 3 or 4 intermediate modules, depending on the length and conditions of the fuel contents. Axial fuel spacers and plates may be used as dunnage to axially position the MTR fuel elements in the basket module to facilitate fuel unloading operations.

The fuel content condition (i.e., heat load, fissile mass, minimum cool time, etc.) limits for the various fuel types are discussed or referenced in the following paragraphs.

MTR fuel elements shall be selected and loaded in accordance with the MTR General and Preferential Loading Procedures in Section 7.1.5. The MTR plate canister, if required, shall be loaded in accordance with Section 7.1.4.1.

DIDO fuel elements shall meet the following loading conditions:

- The maximum decay heat per DIDO fuel element shall not exceed 25 W.
- The maximum decay heat load for a loaded DIDO fuel basket assembly shall not exceed 1.05 kW.
- The heat load for each DIDO fuel element shall be verified by use of cool time versus burnup (MWd/MTU) curves in Figure 7.1-8 (LEU fuel), Figure 7.1-9 (MEU fuel), and Figure 7.1-10

(HEU fuel) or by use of minimum cool time versus ^{235}U depletion curves in Figure 7.1-11 (generic for LEU, MEU and HEU fuels). Note that significantly lower uranium content for a loaded assembly compared to the design basis assembly may result in a loaded assembly calculated burnup higher than that included in Figure 7.1-8 through Figure 7.1-10. Use of Figure 7.1-11 ^{235}U depletion curves is required for fuel assemblies in this category.

- An additional requirement for fuel element loading of the top module limits the heat load to 18 W per element, unless there is a spacer bolted to the underside of the closure lid, or there is sufficient fuel element hardware to ensure that axial movement of the fuel element is limited, to ensure that the active fuel region is radially shielded by the gamma shield lead layer. A lid spacer, if required, shall be as shown on NAC Drawing No. 315-40-113.

Spiral and MOATA fuel elements shall meet the content conditions specified in the Certificate of Compliance for loading into the ANSTO fuel basket assembly. Full spiral fuel loads or mixed spiral and MOATA fuel loads are authorized with separate basket modules containing the two fuel types.

The procedures for loading the NAC-LWT cask with MTR, DIDO or ANSTO fuel baskets in a dry configuration or using a dry transfer system are as follows:

1. Perform a receipt inspection of the empty cask and trailer/ISO container, inspecting for transport damage.
2. Position the trailer in the designated cask unloading area. Set the trailer brakes and chock the wheels to prevent unintended movement. If site-specific conditions exist that require the trailer to move to allow the cask to be uprighted on its rotation trunnions, release brakes and remove the chocks when required to complete uprighting operations. If an ISO container is used, it may be removed from the trailer and secured in the unloading area.
3. Remove the personnel barrier or the roof and roof cross-members from the ISO container.

   Note: Verify that the package nameplate displays the correct package identification number in accordance with the CoC.

4. Perform a Health Physics survey of the cask and adjacent surfaces of the trailer.

   Note: A receiving survey of the cask and transporter must be performed as soon as practicable after arrival at the site to assure compliance with 10 CFR 20, 10 CFR71.87(i) and 10 CFR 71.47, and to assure timely reporting of any reportable noncompliance.

5. Remove the top and bottom impact limiters.
6. Remove the cask tie-down strap.
7. Using the lifting yoke with the guides removed, engage the lifting trunnions. Raise the cask to vertical by rotating the cask rotation sockets on the rear cask supports, moving the crane and/or trailer as required to keep the lift yoke engaged to the trunnions and the

cask engaged in the rear supports. When the cask is fully vertical, lift the cask from the supports and remove it from the trailer/container.

8. Place the cask onto the dry loading station/stand. Disengage the lifting yoke and move clear.

9. Visually inspect the neutron shield tank fill, drain and level inspection plugs for signs of neutron shield fluid leakage. If leakage is detected or suspected, verify shield tank fluid level and correct, as required.

10. Remove the vent and drain valve port covers. Prior to reinstallation of the port covers, carefully inspect the O-ring seals and, if the O-rings show any damage, replace them with approved spares. Ensure that the replacement O-rings are properly installed and seated. Visually inspect the valved quick-disconnect nipples and replace them, if necessary.

    Note: For Alternate B port covers, replace the metallic O-ring with an approved spare prior to reinstallation.

11. Remove closure lid bolts. Attach the lid lift slings to the closure lid. Remove the closure lid and set it on a support that is suitable for radiological control and for maintaining the cleanliness of the closure lid. Prior to reinstallation of the lid, carefully inspect the Teflon O-ring seal in the underside of the closure lid and, if it shows any damage, replace it. Remove the metallic O-ring and replace it with an approved spare. Ensure that the replacement O-rings are properly installed and seated. Inspect the lid bolts and replace any that are damaged.

12. Visually inspect the inner cavity for foreign material or damage. Install or verify presence of a proper drain tube including drain tube alignment ring, as required.

13. Install the required dry transfer system components on the top of the cask.

14. Position the shielded transfer cask system components for fuel loading, as appropriate.

15. Identify the fuel to be loaded into each fuel basket module. Fuel elements loaded into each basket and/or module shall comply with the approved content conditions specified in Condition 5.(b)(1) and 5.(b)(2) of CoC No. 9225. Specific guidance on fuel selection, use of loading diagrams and preferential loading procedures is provided in Section 7.1.5. Perform an independent verification of the loading diagrams and fuel loading operations per Section 7.1.5.3.

    Note: If a basket module is to be loaded with a LEU MTR fuel element having ^{235}U content >470 g (>22 g ^{235}U per plate), cell black spacers, as shown on Drawing 315-40-085, shall be installed in basket module cell positions 1, 2 and 3 to prevent inadvertent loading of more than four LEU MTR fuel elements.

    Note: For the loading of HEU MTR fuel elements having ^{235}U content >380 g, a minimum of 2.0 cm of nonfuel hardware and /or spacer plates shall be provided at both ends of the fuel element to meet criticality control analysis requirements.

16. Load the shielded transfer cask and basket module with the selected fuel contents.

17. Place the shielded transfer cask containing a loaded fuel basket module onto the dry transfer system components positioned on the top of the cask.

18. Lower the loaded basket module from the transfer cask into the shipping cask.
19. Repeat the loading and transfer of loaded basket modules until the approved cask loading plan is completed.
20. Install the closure lid onto the cask using the dry transfer system. Visually verify that the lid is properly seated.
21. Remove the dry transfer system components from the top of the cask.
22. Install and tighten the 12 closure bolts to 260 ± 20 ft-lb in three passes, using the sequence stamped on the lid.
23. Connect a gas supply line to the vent valve and the drain line to the drain valve.
24. Open the air, nitrogen or helium gas supply valve and pressurize the cask cavity (< 30 psig) to force any residual water out the drain line. Continue to supply pressurized gas to the cask for a minimum of five minutes after the last residual free water discharges from the drain. Remove the drain and gas supply lines and attach a vacuum drying system (VDS) to the vent.
25. Evacuate the cask cavity to less than or equal to 10 torr (13 mbar) and continue vacuum pumping for a minimum of 15 minutes.
26. At the end of the vacuum pumping period, isolate the cask cavity from the vacuum pump and stop the vacuum pump. Monitor the cask cavity pressure for a minimum of 10 minutes. If the pressure rise is less than 5 torr (6.7 mbar), the cavity is verified as dry of free water. If pressure rise is >5 torr (6.7 mbar), repeat vacuum drying until the dryness verification results are satisfactory.
27. Backfill the cask cavity with helium to 0 psig (1 atmosphere, absolute), +1, -0 psi and disconnect the VDS from the vent valve.
28. Perform a helium leakage test of the closure lid containment O-ring using a Helium Mass Spectrometer Leak Detector (He MSLD) in accordance with the procedural requirements of Section 8.1.3.1, Steps 3 through 10.
29. Install the vent and drain alternate port covers and torque the bolts to 100 ±10 inch-pounds.
30. If an alternate port cover containment O-ring seal was replaced, perform a helium leakage test on the affected port cover using a He MSLD in accordance with the requirements of 8.1.3.2.2.
31. If the alternate port cover containment seal was inspected and accepted for reuse, perform a gas pressure drop leakage test on the affected port cover as follows.
    a. Install a pressure test fixture to the port cover test port including a calibrated pressure gauge with a minimum sensitivity of 0.25 psi.
    b. Pressurize the port cover seal annulus to 15 psig, +1, -0 psi.
    c. Isolate the gas supply and observe the pressure gauge for a minimum of five minutes.

d. The acceptance criterion for the test is no measurable drop in pressure during the minimum test time. An acceptable test assures that the minimum assembly verification leakage test sensitivity is achieved.

Note: Alternate B port covers, if used, require the satisfactory completion of a helium maintenance leakage rate test to confirm a leaktight seal condition for each loaded transport. Install the Alternate B port cover, torque the high-strength bolts to 285 ± 15 inch-pounds, and perform the maintenance leakage rate test per the requirements of Section 8.1.3.3.

32. Decontaminate the cask surfaces. Survey the cask for surface contamination and radiation dose rates.

Note: Ensure compliance with 10 CFR 71.87(i) and 10 CFR 71.47

33. Remove lift yoke arm guides. Engage the cask lifting yoke to the lifting trunnions.

34. Lift the cask and position the cask rotation sockets in the rear rotation trunnions of the rear support structure. Carefully lower the cask to the horizontal transport orientation resting on the front saddle by moving the crane and/or the trailer as required to maintain cask engagement to the rear supports.

35. Disengage the lifting yoke from the lifting trunnions and remove it from the area.

36. Install the cask tie-down strap. Install the top and bottom impact limiters.

37. Install tamper seal wire and number seal on the top attachment point on the top impact limiter.

38. Install ISO container bracing and lid, or personnel barrier.

39. Complete radiation and contamination surveys of the external surfaces of the package and record the data. Ensure removable contamination and radiation dose rate survey results comply with the limits specified in 10 CFR 71.87(i) and (j).

40. Measure the dose rate in millirems per hour at one meter from the package surface to determine the Transport Index (TI). Indicate the TI on the Radioactive Material labels applied to the package in accordance with 49 CFR 172, Subpart E.

41. Determine the appropriate Criticality Safety Index (CSI) assigned to the package contents in accordance with the CoC, and indicate the correct CSI on the Fissile Material label applied to the package per 49 CFR 172, Subpart E.

42. Apply appropriate placards to the transport vehicle in accordance with 49 CFR 172, Subpart F.

43. Complete the shipping documents and provide the carrier with instructions regarding the requirements for maintaining an exclusive use shipment.

7.1.4.1 Procedure for Loading MTR Fuel Plates into MTR Plate Canister

1. Examine the MTR plate canister and inspect for damage. Visually verify that one end of the canister is installed, the six associated bolts are installed and the other end is removed.
2. Place the can in the loading fixture.
3. Load the fuel plates into the canister. Verify that the number of fuel plates in the canister is no more than the maximum number of plates in an intact MTR fuel element of its type.
4. Install the lid and lid bolts.

7.1.5 MTR General and Preferential Loading Procedures

Up to 42 LEU, MEU, and HEU MTR fuel elements may be loaded into the NAC-LWT MTR Fuel Basket, i.e., 7 fuel elements per basket module × 6 basket modules per fuel basket, except for LEU MTR fuel elements with greater than 470 g ^{235}U, which are limited to 4 elements per basket module as detailed in the following paragraphs. Each MTR basket module has 7 fuel element positions. The MTR basket module loading diagram presented in Figure 7.1-1 has a center position (Position 1), two exterior positions (Positions 2 and 3) that are in line with the center position, and four exterior positions (Positions 4, 5, 6, and 7) that are adjacent to the center row positions. The basket module's fuel element locations are specifically identified to ensure loading of each location with the appropriate fuel element. Ensuring MTR fuel loadings are performed in strict accordance with the procedures presented herein will ensure that the MTR fuel content conditions of the Certificate of Compliance (CoC) are met and that the analyses presented in this SAR are bounded.

MTR fuel elements are selected for loading into specific fuel element locations based on the decay heat of each individual fuel element at the time of loading. Figure 7.1-2 through Figure 7.1-5 are provided to assist in determining the acceptability of a MTR fuel element for loading in a 30 W uniform loading pattern depending on enrichment (i.e., LEU, MEU or HEU) or ^{235}U content (i.e. 380 or 460 grams). For determining the acceptability of higher heat load HEU fuel elements, Figure 7.1-6 and Figure 7.1-7 are provided for 380 and 460 grams of ^{235}U, respectively. The use of the fuel element cool time versus fuel burnup figures are described in Section 7.1.5.4. LEU MTR fuel elements with a ^{235}U content greater than 470 grams, but not exceeding 640 grams, are restricted to baskets containing a maximum of four fuel elements (or an equivalent number of fuel plates per opening). The four element per basket module is in effect even if only one LEU MTR assembly exceeds 470 g per element. Specific basket locations and restrictions for the high load LEU elements are described in Section 7.1.5.1.

The procedural steps and sequence to ensure the MTR fuel loading and content condition limits are met are: 1) determine ^{235}U content weight per element; 2) determine fuel element decay heat load per Section 7.1.5.4; 3) determine basket module loading position for each element and overall basket loading pattern; and 4) individual basket module loading and assembly of the fuel basket in the NAC-LWT. Each of these steps is independently verified.

Attention to the overall cask loading pattern allows the decay heat load of the cask to be maintained as uniform, as is practical and within CoC total heat load limits. Loading diagrams for each individual module and the complete cask assembly shall be developed and used during the basket module and cask loading operations. After the decay heat load of each of the MTR fuel elements to be loaded and transported is calculated or determined and verified, the loading and content considerations of Sections 7.1.5.1 through 7.1.5.3 shall be met or complied with to establish the final acceptable loading pattern and sequence.

7.1.5.1 General Loading Requirements

1. The maximum decay heat load per MTR fuel basket module shall not exceed 210 W and the maximum decay heat load per cask (package) shall not exceed 1.26 kW. A MTR fuel element with a decay heat greater than 120 W shall not be loaded.
2. LEU, MEU and HEU MTR fuel elements with decay heat not exceeding 30 W per element may be loaded in any basket module fuel element location in any combination.
3. HEU MTR fuel elements with decay heats exceeding 30 W shall be preferentially loaded in a basket module in decreasing decay heat order according to the loading diagram in Figure 7.1-1, with the highest heat load element loaded in fuel location one. Fuel elements with heat loads of up to 120 W shall only be loaded in the center fuel element location of any MTR fuel basket module. The decay heat of the fuel element in either of the two fuel element locations (i.e., number 2 or 3), in line with the center fuel element location of a MTR fuel basket module, shall not exceed 70 W.
4. LEU MTR fuel elements (or canistered fuel plates) with a ^{235}U content greater than 470 g, and not exceeding 640 g, shall only be loaded into basket positions 4, 5, 6 and 7 shown in Figure 7.1-1. In order to ensure that baskets containing the high fissile mass LEU MTR elements (>470 g ^{235}U) will not be loaded with fuel elements (or fuel plates) in basket opening positions 1, 2 and 3, a cell block spacer shall be installed in each of these three basket openings. The cell block spacer, as shown on Drawing 315-40-085, is of sufficient height and diameter to ensure that LEU MTR fuel elements are prevented from being placed in these openings. The capacity limitation of a maximum of four MTR fuel elements per module is in effect even if a single LEU MTR fuel elements (or canistered fuel plates) having >470 g ^{235}U is to be loaded.
5. An MTR plate canister may be loaded into any fuel basket module fuel element location. The contents of each plate canister shall be limited to the number of fuel plates, dimensions and masses of an equivalent intact MTR fuel element.

6. MTR fuel elements with corrosion and/or mechanically damaged cladding may be loaded, provided that the total surface area of through-clad corrosion and/or mechanical damage does not exceed 2,775 cm^2 per package.

7.1.5.2 Determination of Basket Module Loading Pattern

1. Perform an evaluation of the full inventory of fuel elements to be loaded into the NAC-LWT cask(s) and develop an overall loading plan that minimizes overall dose rates to minimize general population dose and operator dose. The loading of LEU MTR fuel elements with greater than 470 g ^{235}U shall be governed by the loading restrictions in item 4 of Section 7.1.5.1, and cell block spacers shall be placed in basket loading positions 1, 2 and 3 to prevent inadvertent loading of more than four high fissile mass LEU MTR elements.
2. Select up to seven MTR fuel elements to be loaded in a basket module meeting the general loading requirements of Section 7.1.5.1. Identify if spacers or spacer plates are required to properly position the MTR elements axially in the basket module.
3. Rank the fuel elements in order of decreasing decay heat load from 1 to 7. (i.e., the assembly with the highest decay heat is designated number 1.)
4. Generate loading diagrams for each basket module based on Figure 7.1-1, by placing the numbered assemblies in the matching numbered basket module positions, except that fuel elements ranked 4,5,6 or 7 may be loaded in any of the outer (i.e., 4-7) basket module positions.
5. Repeat steps 1 through 4 for all of the basket modules to be loaded.
6. Independently verify the basket module loading diagrams.
7. The loading diagrams shall be used to direct the loading of the basket modules per Section 7.1.5.3.

Once the basket module loading charts are complete, they are used to direct the loading of the basket modules.

7.1.5.3 Basket Loading Procedure

1. Locate the MTR fuel element to be loaded into the basket module per the loading diagram prepared for that module type (i.e., base, intermediate or top).
2. Independently verify the element identification.
3. Load the element into the predetermined fuel basket module fuel element location using the loading diagram. Ensure spacers are installed in positions 1, 2 and 3 of any basket module containing a high fissile mass LEU MTR element.
4. Independently verify that the fuel element and spacer loading in the basket module complies with the loading diagram.
5. Repeat steps 1 through 4 until all identified fuel elements have been loaded into basket modules in compliance with the loading diagrams.

7.1.5.4 Estimating Assembly Decay Heat

When the decay heat of a fuel element is not known, the assembly burnup (MWd/MTU) and cooling time (years) can be used to define the allowable basket module positions using Figure 7.1-2 through Figure 7.1-7, depending on fuel enrichment (i.e., LEU, MEU or HEU) or ^{235}U content.

HEU MTR fuel elements may be loaded with heat loads greater than 30 W. HEU elements exceeding 30 W shall be preferentially loaded, and Figure 7.1-6 and Figure 7.1-7 identify the appropriate cooling times and burnup limits for 120 W, 70 W and 20 W HEU elements, having a ^{235}U mass of up to 380 grams and a ^{235}U mass of up to 460 grams, respectively. The following steps are used to develop the appropriate loading patterns.

1. Locate the point on Figure 7.1-6 or Figure 7.1-7 for the fuel element burnup and cooling time, and ^{235}U content.
2. If the located point is above the 20 W line, there are no restrictions on fuel element placement in the basket module.
3. If the located point is between the 20 W and 70 W lines, the element is loaded as a 70 W element.
4. If the located point is between the 70 W and 120 W lines, the element is loaded as a 120 W element.
5. If the located point is below the 120 W line, the element shall not be loaded in the NAC-LWT cask.
6. The maximum total decay heat load for a preferentially loaded basket module shall not exceed 210 W and 1.26 kW for a loaded NAC-LWT cask.
7. Each shipper shall ensure that the Certificate of Compliance maximum decay heat load limits of 210 W per basket module and 1.26 kW per cask are not exceeded.

Figure 7.1-1 MTR Fuel Basket Module Loading Pattern (Top View)

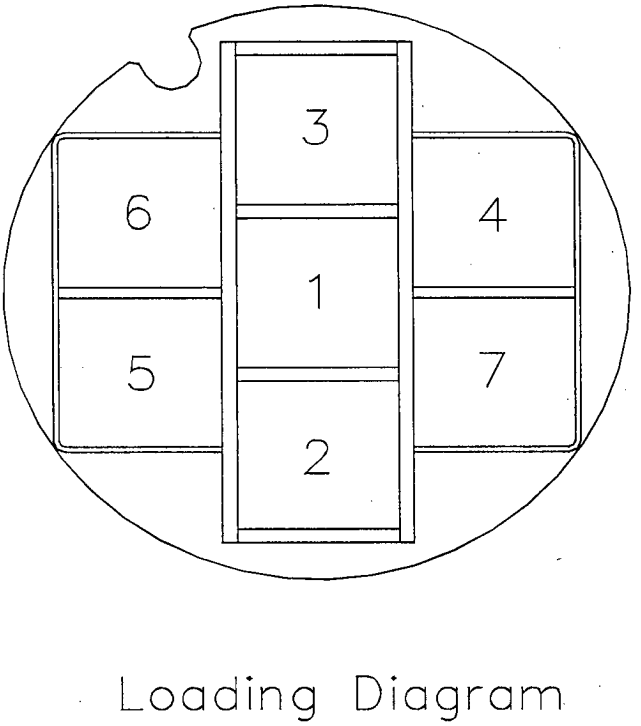

Figure 7.1-2 LEU MTR Fuel Basket Loading Guidelines for 30 W Uniform Loading

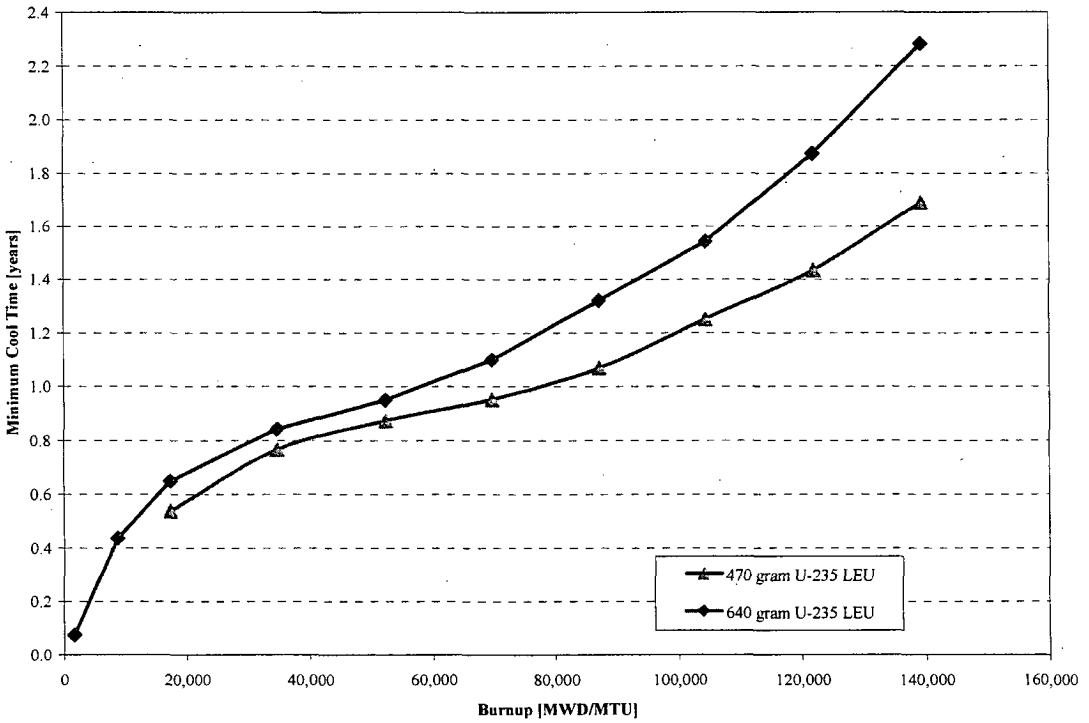

Figure 7.1-3 MEU MTR Fuel Basket Loading Guidelines for 30 W Uniform Loading

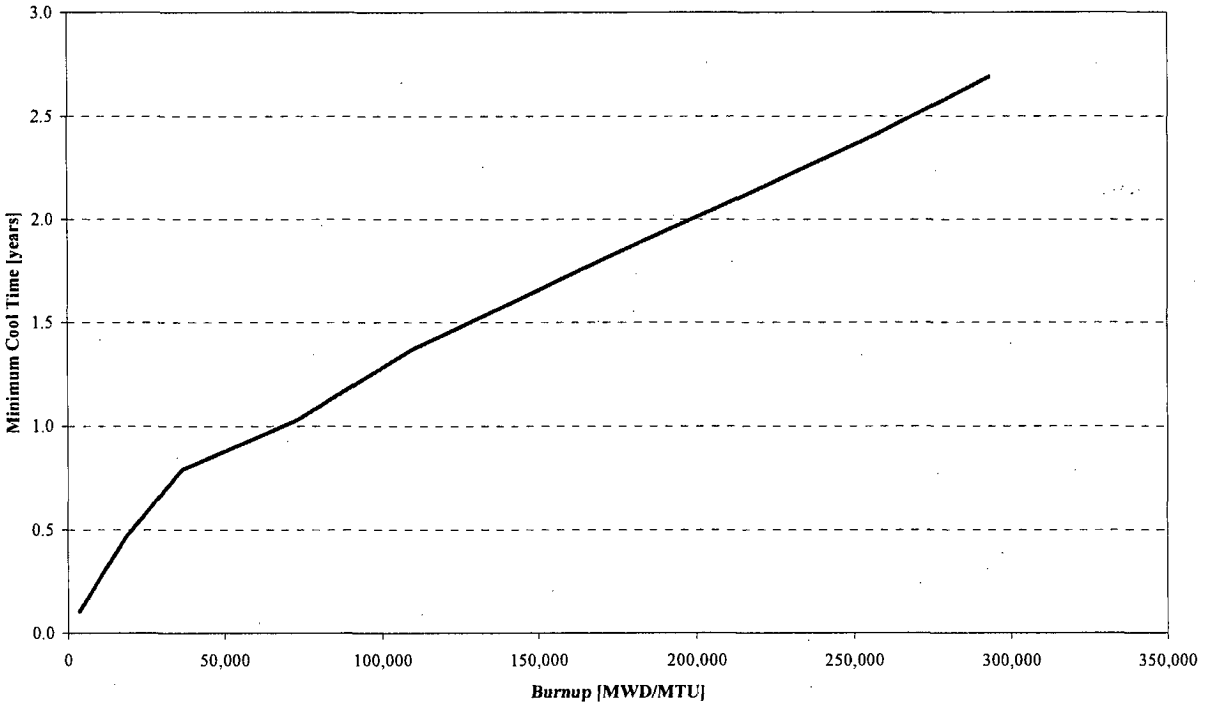

Figure 7.1-4 HEU MTR Fuel Basket Loading Guidelines for 30 W Uniform Loading – Maximum 380 grams ^{235}U

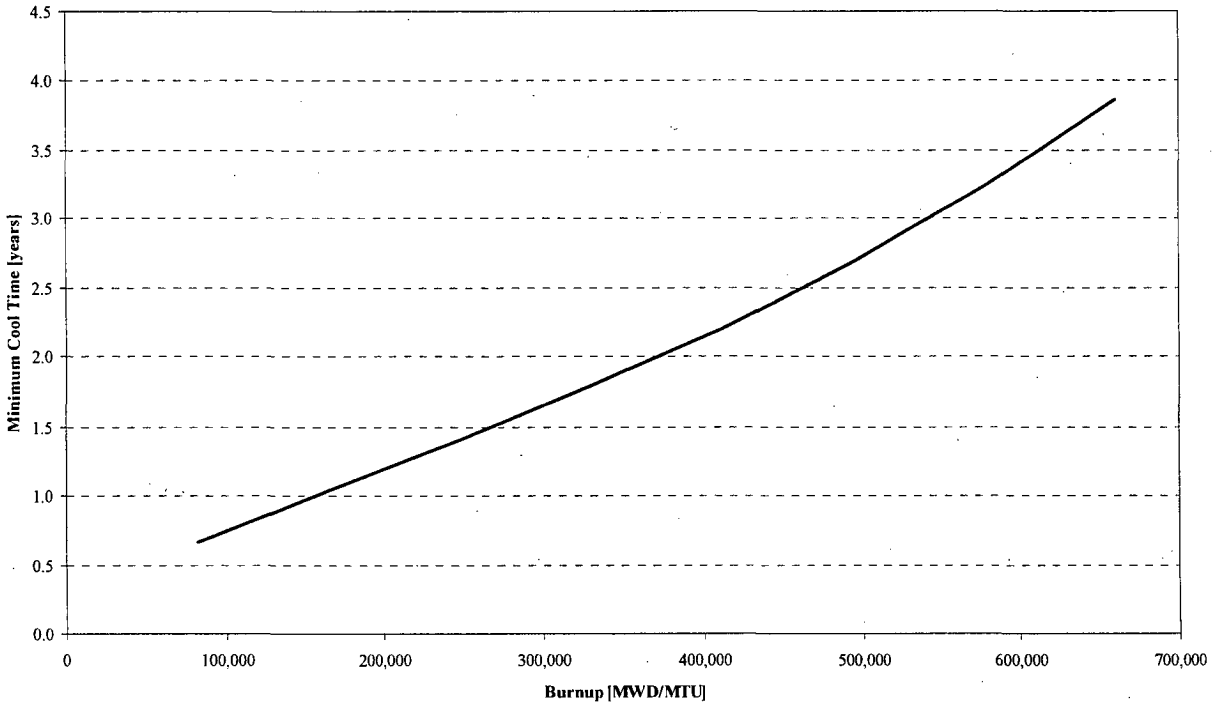

Figure 7.1-5 HEU MTR Fuel Basket Loading Guidelines for 30 W Uniform Loading – Maximum 460 grams ^{235}U

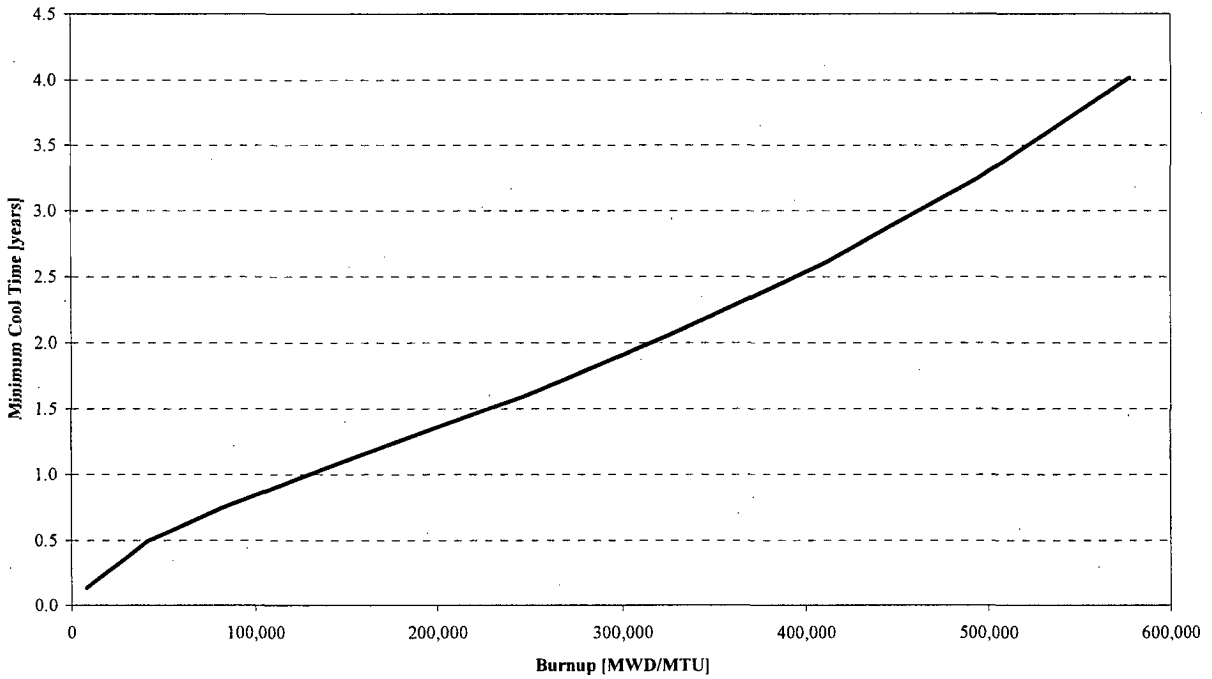

Figure 7.1-6 HEU MTR Fuel Basket Loading Guidelines for Preferential Loading – Maximum 380 grams ^{235}U

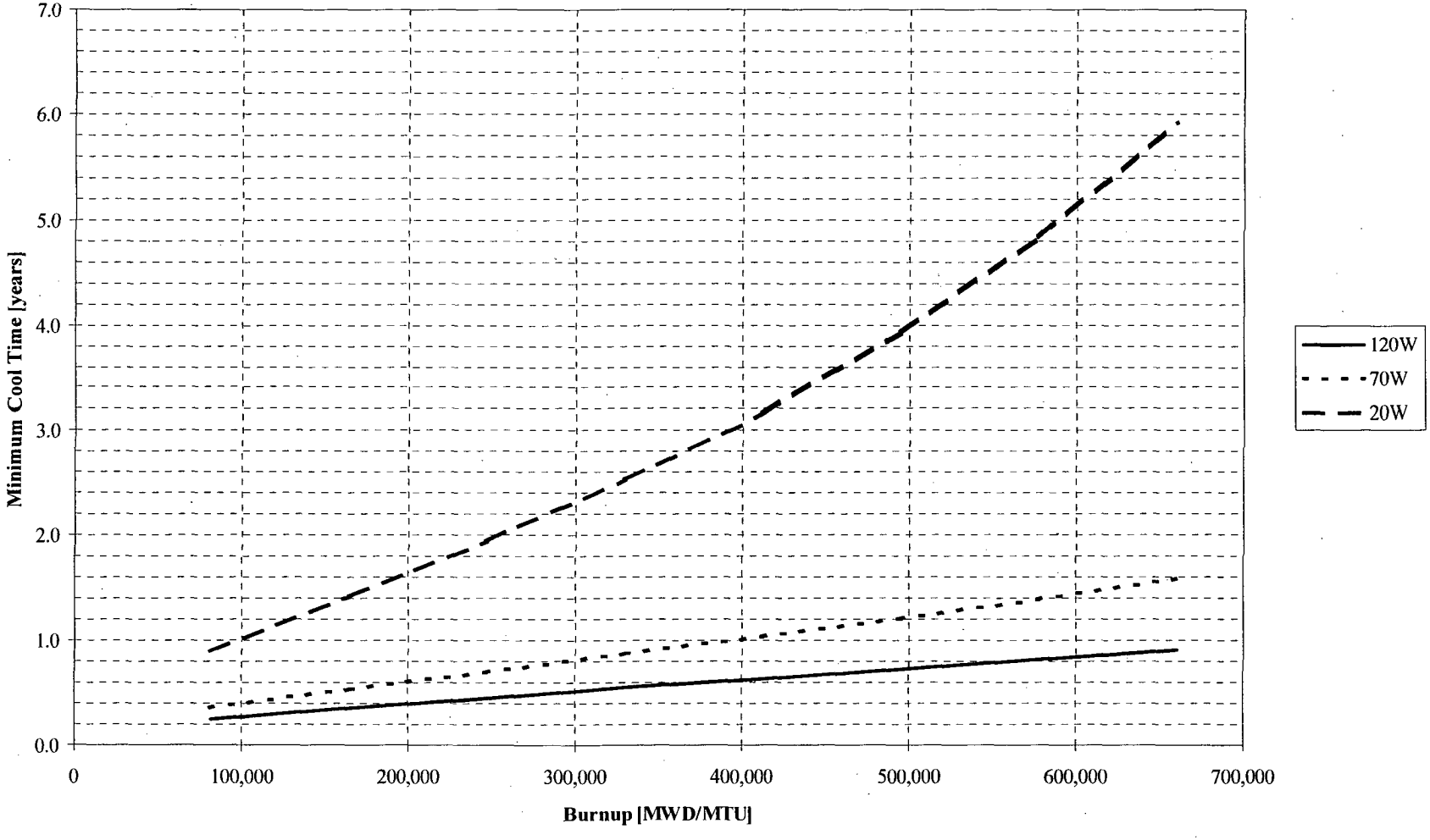

Figure 7.1-7 HEU MTR Fuel Basket Loading Guidelines for Preferential Loading – Maximum 460 grams ^{235}U

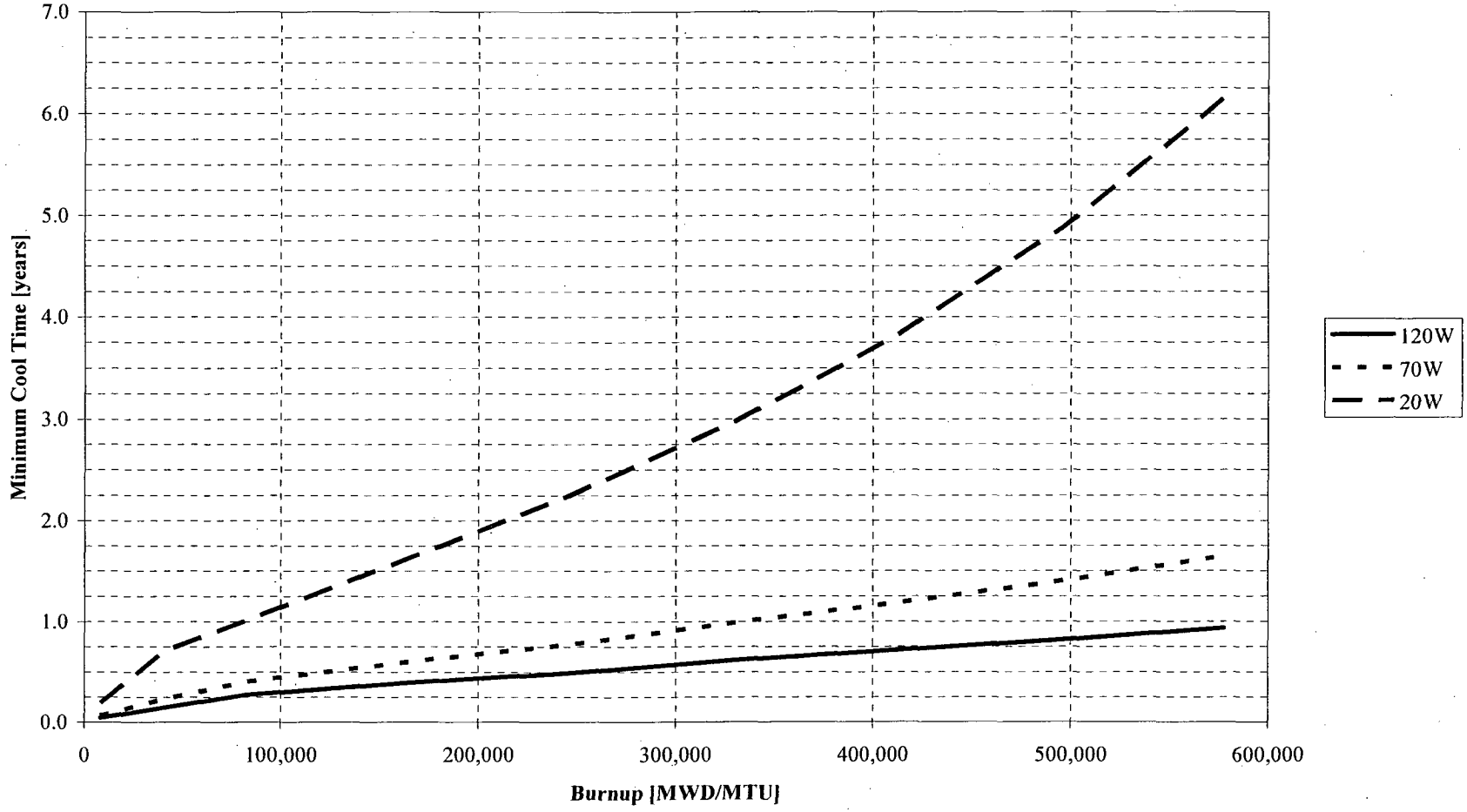

Figure 7.1-8 DIDO LEU Cooling Time vs. Fuel Burnup Basket Module Loading Guidelines for Uniform Loading

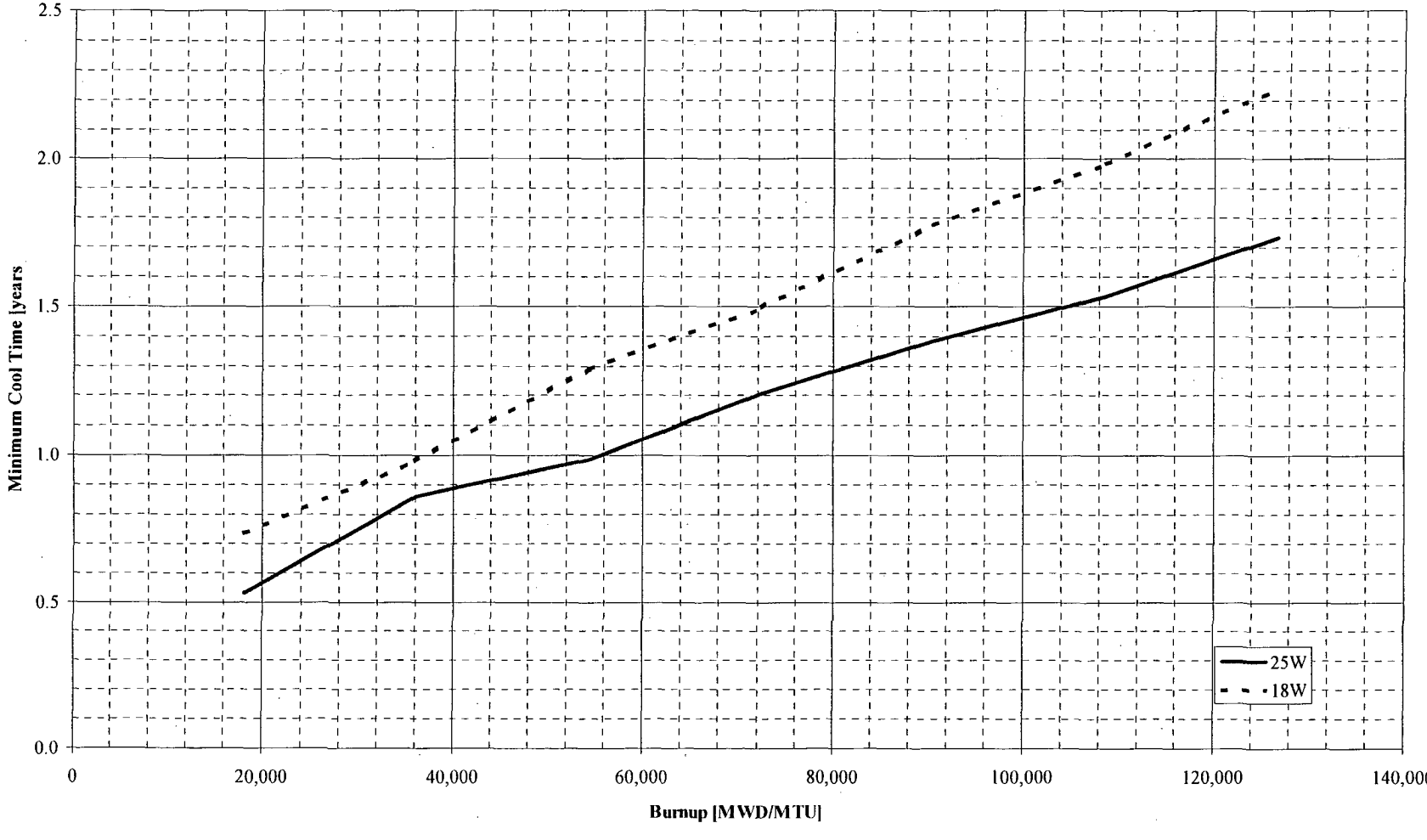

Figure 7.1-9 DIDO MEU Cooling Time vs. Fuel Burnup Basket Module Loading Guidelines for Uniform Loading

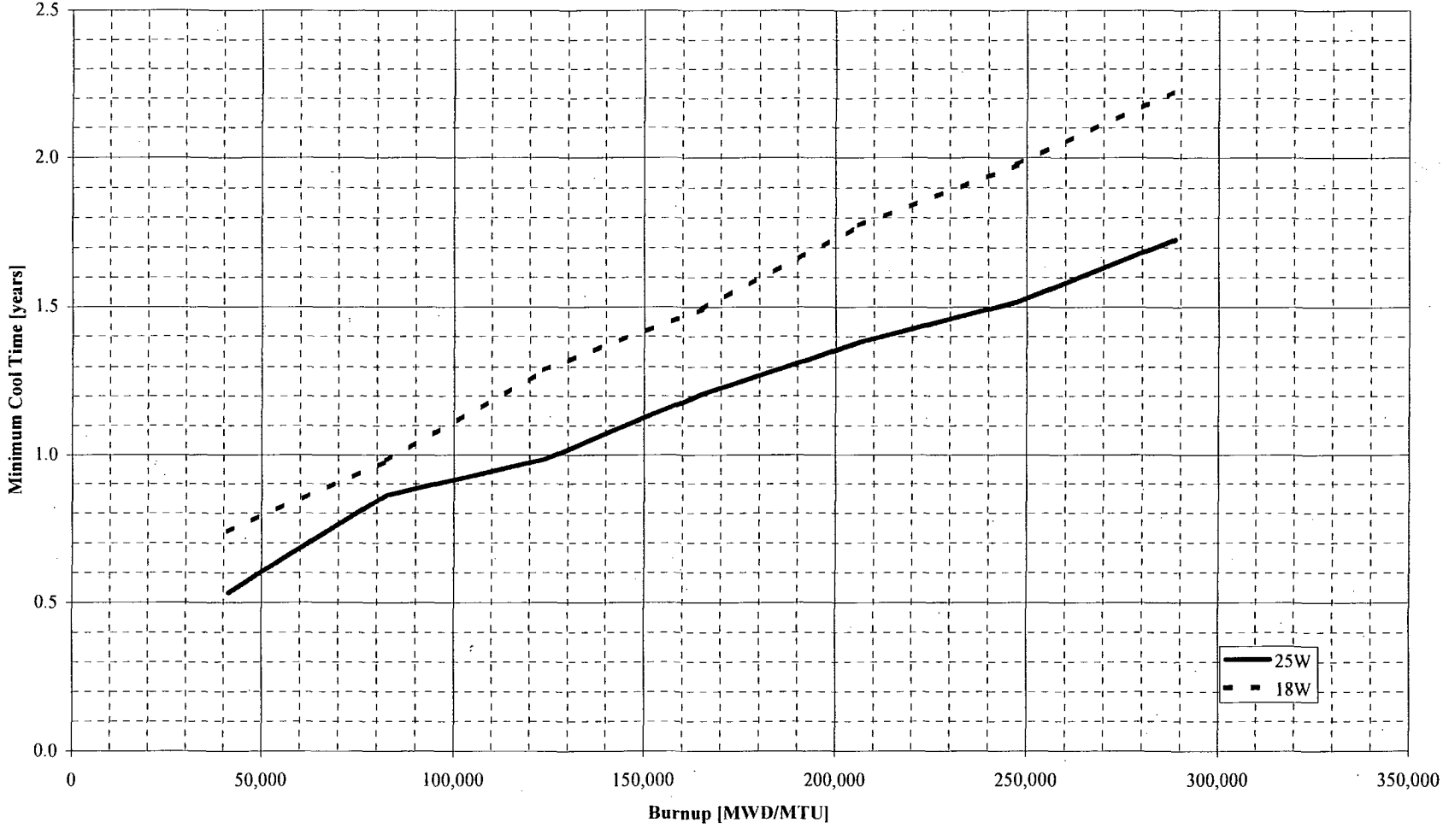

Figure 7.1-10 DIDO HEU Cooling Time vs. Fuel Burnup Basket Module Loading Guidelines for Uniform Loading

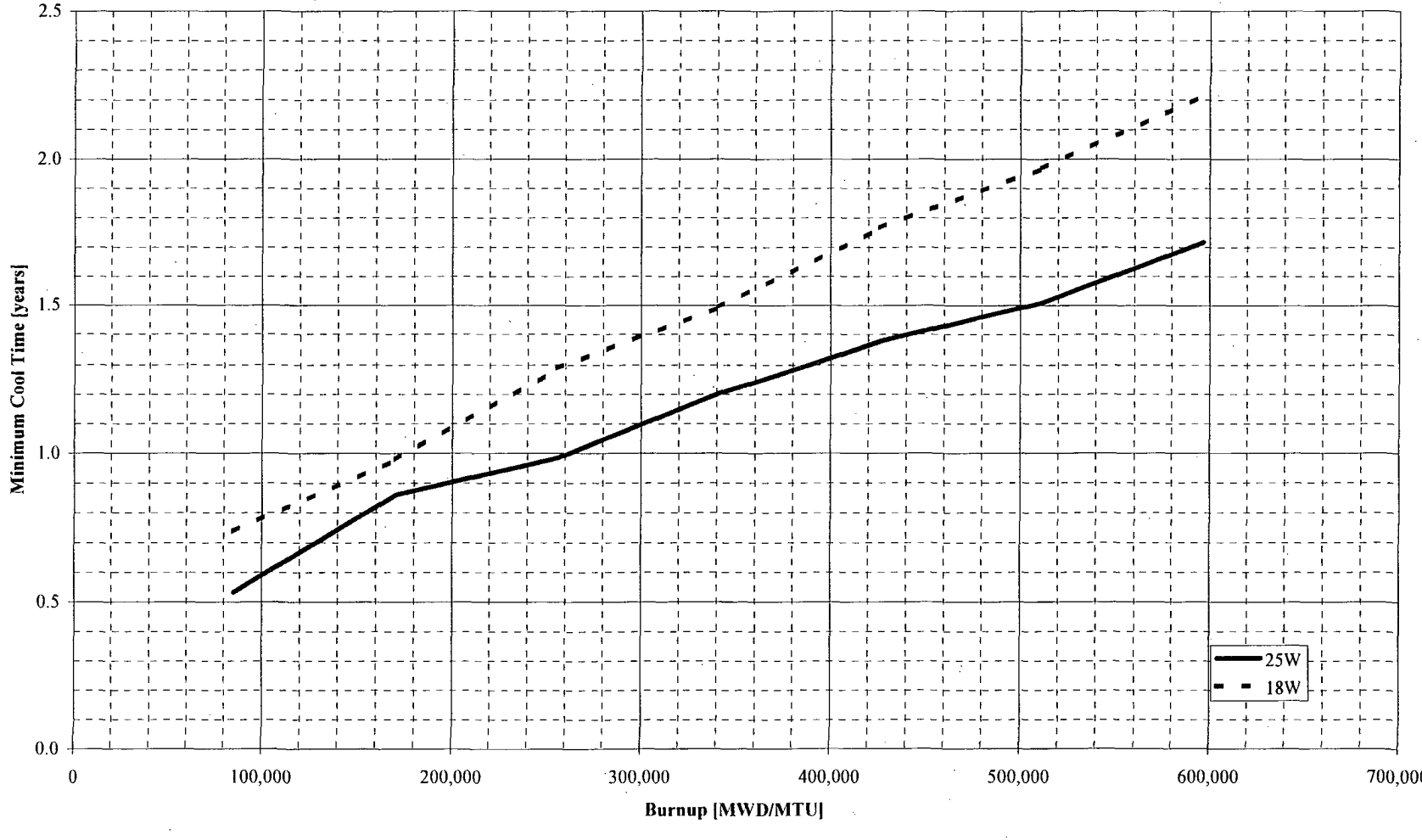

Figure 7.1-11 Bounding DIDO Element Minimum Cool Time vs. wt % ^{235}U Depletion

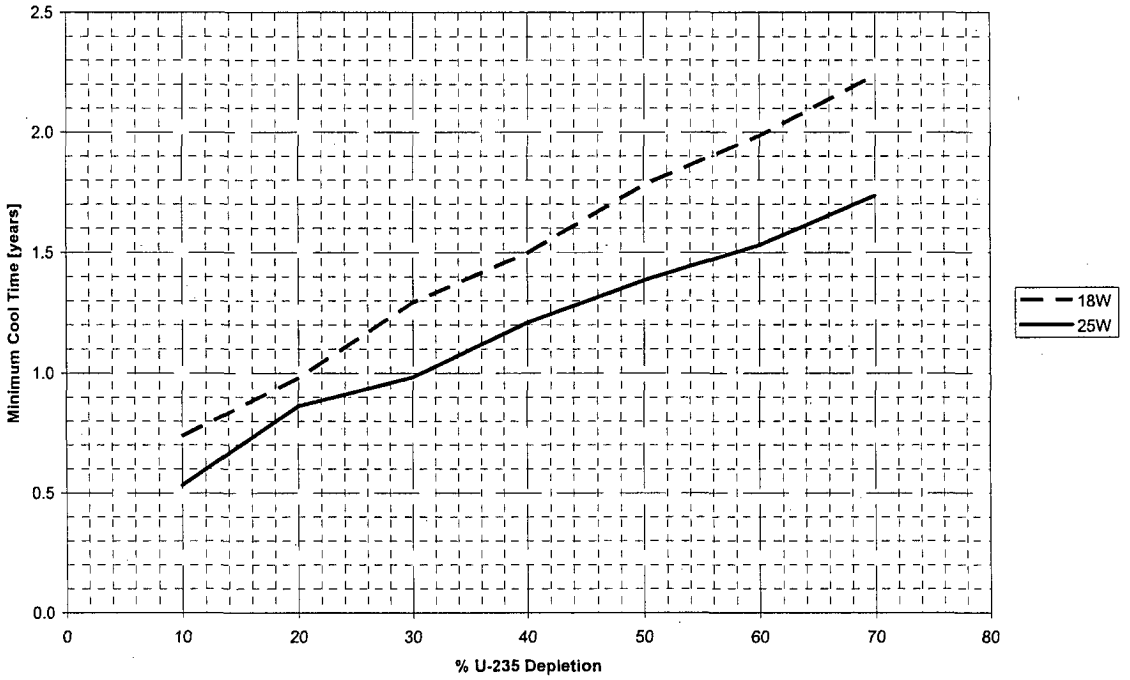

7.1.6 Procedure for Dry Loading of TRIGA Fuel Basket Modules and GA IFM Modules into the NAC-LWT Cask

This procedure presents the steps for dry loading, using a transfer cask, of the nonpoisoned or poisoned TRIGA fuel basket modules into the NAC-LWT. For transport, five TRIGA fuel basket modules, consisting of a top module, a base module, and three intermediate modules must be loaded into the NAC-LWT. An alternative loading option is available for the poisoned TRIGA basket modules. This configuration, Configuration 2, consists of 1 base module and 4 intermediate modules. A spacer attached to the underside of the NAC-LWT lid is used with Configuration 2. Each basket module consists of seven cells, a center cell, and six peripheral cells. The center cell of the nonpoisoned basket design is blocked and cannot be loaded. Each unblocked cell may contain up to four TRIGA fuel elements, or up to 16 TRIGA fuel cluster rods within a fuel rod insert placed into the cell prior to loading. Each nonpoisoned basket module may contain up to 24 TRIGA fuel elements, for a total of 120 elements, or up to 96 TRIGA fuel cluster rods, for a total of 480 rods per basket assembly. Each poisoned basket module may contain up to 28 TRIGA fuel elements, for a total of 140 elements, or up to 112 TRIGA fuel cluster rods, for a total of 560 rods per basket assembly. The maximum decay heat load of any TRIGA fuel element is 7.5 watts, while the maximum decay heat load of a TRIGA fuel cluster rod is 1.875 watts. An alternative loading option is available for the General Atomics (GA) Irradiated Fuel Material (IFM) Fuel Handling Units (FHU). This configuration consists of one GA IFM top module and one GA IFM spacer. The GA IFM top module, based on the TRIGA basket design, has two canister storage tubes that hold the GA IFM FHU.

TRIGA fuel elements may be transported directly in the basket module cell, or in a sealed damaged fuel can (DFC). TRIGA fuel cluster rods may be transported within the fuel rod insert in a basket cell, or a sealed DFC. The sealed DFCs fit in a module cell. The sealed DFC holds up to two equivalent TRIGA elements as damaged fuel or fuel debris, or up to six equivalent TRIGA fuel cluster rods as damaged rods or fuel debris. Damaged TRIGA fuel and fuel debris contained in sealed DFCs shall be loaded and transported in an NAC-LWT assembled and tested in a leaktight containment configuration.

When loading TRIGA fuel elements directly into the basket cells of a TRIGA basket module, the fuel elements may be loaded with either 4 elements per cell, or one element per cell, without shoring. If a basket cell is loaded with 2 or 3 intact elements, dummy rods will be inserted as necessary to fill the remaining space in the cell.

Damaged TRIGA fuel elements and cluster rods and fuel debris are required to be loaded into sealed DFCs. The sealed DFCs are provided in two lengths. The short sealed DFC may be used

in the base or top basket module. The long sealed DFC may be used in only the top module. The sealed DFCs are vacuum dried prior to loading into a TRIGA fuel basket (see sealed DFC loading procedure in Section 7.1.7). Damaged TRIGA fuel and fuel debris loaded in sealed DFCs shall be transported in an NAC-LWT having a leaktight containment configuration verified by helium leakage testing to be leaktight to 2×10^{-7} ref cm^3/s (helium).

There are two separate GA IFM FHU designs. One FHU is designed to hold research reactor fuel and the other is designed to hold High-Temperature Gas-Cooled Reactor fuel pellets. Each FHU consists of a sealed inner canister within a sealed outer canister. Each FHU contains irradiated fuel materials as described in Chapter 1. When loading the GA IFM FHUs, each individual sealed FHU will be loaded separately into a single GA IFM basket. This single basket containing two GA IFM FHUs and a spacer will comprise the entire cask load. Loading of the GA IFM basket into the NAC-LWT cask will utilize the TRIGA dry configuration loading procedure that is described in the following paragraphs.

TRIGA fuel elements that can be loaded into the cask are limited to a maximum decay heat of 7.5 watts per element, as discussed in Section 1.2.3. The decay heat load of the element must be calculated, and verified to be equal to or less than 7.5 watts per element prior to loading. TRIGA fuel cluster rods that can be loaded into the cask are limited to a maximum decay heat of 1.875 watts per element, as discussed in Section 1.2.3 (by reference to Table 5.1.1). The decay heat load of the fuel cluster rod must be calculated, and verified to be equal to or less than 1.875 watts per element prior to loading.

The procedure for loading the package with TRIGA fuel in a dry configuration is as follows:

1. Perform a receipt inspection of the empty cask and trailer/ISO container, inspecting for transport damage.
2. Position the trailer in the designated cask unloading area. Set the trailer brakes and chock the wheels to prevent unintended movement. If site-specific conditions exist that require the trailer to move to allow the cask to be uprighted on its rotation trunnions, release brakes and remove the chocks when required to complete uprighting operations. If an ISO container is used, it may be removed from the trailer and secured in the unloading area.
3. Remove the personnel barrier or the roof and roof cross-members from the ISO container.

   Note: Verify that the package nameplate displays the correct package identification number in accordance with the CoC.

4. Perform a Health Physics survey of the cask and adjacent surfaces of the trailer.

   Note: A receiving survey of the cask and transporter must be performed as soon as practicable after arrival at the site to assure compliance with 10 CFR 20,

10 CFR 71.87(i) and 10 CFR 71.47, and to assure timely reporting of any reportable noncompliance.

5. Remove the top and bottom impact limiters.

6. Remove the cask tie-down strap.

7. Using the lifting yoke with the guides removed, engage the lifting trunnions. Raise the cask to vertical by rotating the cask rotation sockets on the rear cask supports, moving the crane and/or trailer as required to keep the lift yoke engaged to the trunnions and the cask engaged in the rear supports. When the cask is fully vertical, lift the cask from the supports and remove it from the trailer/container.

8. Place the cask onto the dry loading station. Disengage the lifting yoke and move clear.

9. Visually inspect the neutron shield tank fill, drain and level inspection plugs for signs of neutron shield fluid leakage. If leakage is detected or suspected, verify shield tank fluid level and correct, as required.

10. Remove the vent and drain valve port covers. Prior to reinstallation of the port covers, carefully inspect the O-rings and, if the O-rings show any damage, replace them with approved spares. Ensure that the replacement O-rings are properly installed and seated. Visually inspect the valve quick-disconnect nipples and replace them, if necessary.

    Note: For Alternate B port covers, replace the metallic O-ring with an approved spare prior to reinstallation.

11. Remove closure lid bolts. Attach the lid lift slings to the closure lid. Remove the closure lid and set it on a support that is suitable for radiological control and for maintaining the cleanliness of the closure lid. Prior to reinstallation of the lid, carefully inspect the Teflon O-ring seal in the underside of the closure lid and, if it shows any damage, replace it. Remove the metallic O-ring and replace it with an approved spare. Ensure that the replacement O-rings are properly installed and seated. Inspect the lid bolts and replace any that are damaged.

12. Visually inspect the inner cavity for foreign material or damage. Install, or verify the presence of the proper drain tube and drain alignment ring.

13. Install the required dry transfer system components on the top of the cask.

14. Position the shielded transfer cask system components for fuel loading, as appropriate.

15. Identify the TRIGA fuel basket modules to be loaded. Modular baskets consisting of one base unit, three intermediate units, and one top unit, may be loaded into the cask cavity. The base unit must be the first unit loaded and the top unit must be the last unit loaded. The intermediate modules may be loaded in any of the other loading operations. If the poisoned basket Configuration 2 is used, ensure that the TRIGA spacer is bolted and torqued to 40 ft-lbs to the underside of the NAC-LWT lid. If TRIGA fuel cluster rods are to be transported, ensure that fuel rod inserts are placed

into each cell location that will contain fuel cluster rods. For the GA IFM basket load, install the GA IFM spacer, shown on NAC drawing 315-40-123, prior to inserting the loaded GA IFM top module.

Notes:
a. When utilizing nonpoisoned TRIGA baskets, visually verify that the center blocking plate is welded in place on each basket module.
b. When utilizing poisoned TRIGA baskets, visually inspect each cell of each basket module for foreign material or damage and verify the presence of the neutron poison material (borated stainless steel plates) as shown on NAC Drawings 315-40-080, -081, and -082.
c. When utilizing the GA IFM top module, follow the TRIGA loading procedure below, noting that this is a single basket load.

16. Identify the TRIGA fuel contents to be loaded and verify that the fuel contents comply with the content, heat load and quantity conditions as specified in the CoC.
17. Load a TRIGA fuel basket module into the shielded transfer cask.
18. Place the shielded transfer cask containing the loaded basket module onto the dry transfer system components positioned on the top of the cask.
19. Lower the fuel basket from the shielded transfer cask into the shipping cask.
20. Repeat the loading and transfer of loaded basket modules until the approved cask loading plan is completed.
21. Install the closure lid onto the cask. Visually verify that the lid is properly seated.
22. Remove the dry transfer system components from the top of the cask.
23. Install and tighten the 12 closure bolts to 260 ± 20 ft-lbs in three passes, using the torque sequence stamped on the closure lid.
24. Connect a gas supply line to the vent valve and the drain line to the drain valve.
25. Open the air, nitrogen or helium gas supply valve and pressurize the cask cavity (< 30 psig) to force any residual water out the drain line. Continue to supply pressurized gas to the cask for a minimum of five minutes after the last residual free water discharges from the drain. Remove the drain and gas supply lines and attach a vacuum drying system (VDS) to the vent.
26. Evacuate the cask cavity to less than or equal to 10 torr (13 mbar) and continue vacuum pumping for a minimum of 15 minutes.
27. At the end of the vacuum pumping period, isolate the cask cavity from the vacuum pump and stop the vacuum pump. Monitor the cask cavity pressure for a minimum of ten minutes. If the pressure rise is less than 5 torr (6.7 mbar), the cavity is verified as dry of free water. If pressure rise is >5 torr (6.7 mbar), repeat vacuum drying until the dryness verification results are satisfactory.
28. Backfill the cask cavity with helium to 0 psig (1 atmosphere, absolute), +1, -0 psi and disconnect the VDS from the vent valve.

29. Perform a helium leakage test of the closure lid containment O-ring using a Helium Mass Spectrometer Leak Detector (He MSLD) in accordance with the procedural requirements of Section 8.1.3.1, Steps 3 through 10. Ensure leaktight containment criteria are met.

30. Install the vent and drain alternate port covers and torque the bolts to 100 ±10 inch-pounds.

31. If an alternate port cover containment O-ring seal was replaced, perform a helium leakage test on the affected port cover using a He MSLD in accordance with the requirements of 8.1.3.2.2.

32. If the alternate port cover containment seal was inspected and accepted for reuse, perform a gas pressure drop leakage test on the affected port cover as follows.

    a. Install a pressure test fixture to the port cover test port including a calibrated pressure gauge with a minimum sensitivity of 0.25 psi.

    b. Pressurize the port cover seal annulus to 15 psig, +1, -0 psi.

    c. Isolate the gas supply and observe the pressure gauge for a minimum of five minutes.

    d. The acceptance criterion for the test is no measurable drop in pressure during the minimum test time. An acceptable test assures that the minimum assembly verification leakage test sensitivity is achieved.

    Note: Alternate B port covers, if used to provide a leaktight containment boundary, shall have a helium maintenance leakage rate test performed to confirm a leaktight containment closure. Install the Alternate B port cover, torque the high-strength bolts to 285 ± 15 inch-pounds, and perform the maintenance leakage rate test per the requirements of Section 8.1.3.3.

33. Decontaminate the cask surfaces. Survey the cask for surface contamination and radiation dose rates.

    Note: Ensure compliance with 10 CFR 71.87(i) and 10 CFR 71.47.

34. Engage the cask lifting yoke to the lifting trunnions.

35. Lift the cask and position the cask rotation sockets in the rear rotation trunnions of the rear support structure. Carefully lower the cask to the horizontal transport orientation resting on the front saddle by moving the crane and/or the trailer as required to maintain cask engagement to the rear supports.

36. Disengage the lifting yoke from the lifting trunnions and remove it from the area. Install the cask tie-down strap. Install the top and bottom impact limiters. Install tamper seal wire and number seal on the top attachment point on the top impact limiter.

37. Install ISO container bracing and lid, or personnel barrier.

38. Complete radiation and contamination surveys of the external surfaces of the package and record the data. Ensure removable contamination and radiation dose rate survey results comply with the limits specified in 10 CFR 71.87(i) and (j).

39. Measure the dose rate in millirems per hour at one meter from the package surface to determine the Transport Index (TI). Indicate the TI on the Radioactive Material labels applied to the package in accordance with 49 CFR 172, Subpart E.

40. Determine the appropriate Criticality Safety Index (CSI) assigned to the package contents in accordance with the CoC, and indicate the correct CSI on the Fissile Material label applied to the package per 49 CFR 172, Subpart E.

41. Apply appropriate placards to the transport vehicle in accordance with 49 CFR 172, Subpart F.

42. Complete the shipping documents and provide the carrier with instructions regarding the requirements for maintaining an exclusive use shipment.

7.1.7 Procedure for Loading TRIGA Damaged Fuel or Fuel Debris into a TRIGA Sealed Damaged Fuel Can (DFC)

1. Examine the sealed damaged fuel can (DFC) body and inspect for damage. Verify that the lid sealing surface is clean and free of defects. Visually verify that the drain plug seal is installed and the drain plug is partially threaded into the drain plug adapter to allow for draining.

2. Lower the DFC into the pool and position it for fuel loading.

3. Load the damaged TRIGA fuel cluster rods or fuel debris into the DFC. Verify that no more than the equivalent of 2 fuel elements, or 6 fuel cluster rods, as damaged fuel or fuel debris are loaded into the sealed DFC as specified in the CoC. Visually verify that there is no debris in the lid sealing surface and thread areas.

4. Examine the DFC lid and inspect for damage. Visually verify that the sealing surface is clean and free of defects. Lubricate the lid bolts, install the lid seal and verify that the lid valve is in the open position and the valve lock set screw is retracted.

5. Attach the testing hose to the lid test connection and ensure that the fitting is properly seated.

6. Install the lid and torque the lid bolts to 150 ± 10 inch-pound.

   Note: Torque any two diametrically opposed bolts first, then torque the remaining two bolts. Complete the torque sequence by verifying the torque of all four bolts in a clockwise direction.

7. Pressurize the sealed DFC with air or helium to 5-15 psig to remove the water. Continue the purge for at least 5 minutes after bubbles appear from the base of the DFC.

8. Access and torque the DFC drain plug to 50 ± 10 inch-pound.
9. Evacuate the DFC to a pressure below 10 torr (13 mbar) and continue vacuum pumping for 10 minutes.
10. Stop and isolate the vacuum pump and monitor the DFC vacuum pressure for a minimum of 10 minutes. If the pressure rise is <5 torr (6.7 mbar) in 10 minutes, the DFC is verified as dry of free water. If the pressure rise is >5 torr (6.7 mbar) in 10 minutes or less, the DFC is not considered dry of free water. Repeat vacuum drying and pressure rise testing until the dryness verification results are satisfactory.
11. Backfill the DFC with helium to a pressure of 1 atmosphere (0 psig), +1, -0 psi.
12. Shut and lock the lid diaphragm valve. The DFC is now sealed, dried and backfilled.
13. Disconnect the testing hose from the lid test connection.
14. The sealed DFC is now ready for loading into a TRIGA basket module.

7.1.8 Procedure for Wet Loading of PWR/BWR Fuel Rods into the PWR/BWR Transport Canister

The PWR/BWR transport canister has three configurations: sealed canister, screened canister, and free-flow canister. All three canister configurations may be used to contain either intact or damaged fuel rods, or a combination of both damaged and intact fuel rods. The loaded transport canisters are loaded into the NAC-LWT cask containing a LWT PWR basket assembly with an appropriate bottom weldment spacer. For transport canisters containing any damaged fuel rod contents, a can and an insert spacer are required to be installed and bolted to the underside of the closure lid to limit the axial movement of the canister. The use of the can and insert spacer requires the use of the PWR basket assembly fitted with the Alternate B spacer. Transport canisters containing intact rods may be placed in any of the three types of PWR basket assemblies. Upon completion of loading the transport canister, the canister and the insert spacer are loaded, either together or individually, into the basket assembly in a manner similar to loading a PWR assembly.

1. If the transport canister is to be shipped in a sealed configuration, verify the five drain plugs are installed and torqued to 50 ± 2 foot-pound. If the transport canister is to be shipped in the free flow configuration, verify the five drain plugs are not installed. If the transport canister is to be shipped in the screened configuration, verify the screened plugs are installed and torqued to 50 ± 2 foot-pound in the bottom of the canister.
2. Lower the transport canister (and insert) into the fuel pool for loading.
3. Load the spent fuel rods into the transport canister in accordance with site-specific procedures. Separate failed fuel rod capsules may be used to contain either intact or damaged fuel rods within the canister. The capsules are intended to limit dispersal

of radioactive material to the canister internals. Visually upon completion of loading, verify that there is no debris on the lid sealing surface and threaded areas.

4. Using the appropriate lid (sealed, screened or free-flow), examine and inspect for damage. Visually verify that the sealing surface is clean and free of defects. Lubricate the lid bolts.

5. Install the lid and torque the lid bolts to 35 ± 5 inch-pound.

   Note: Torque any two diametrically opposed bolts first, then torque the remaining six bolts. Complete the torque sequence by verifying the torque of all eight bolts in a clockwise direction.

6. If the transport canister is being shipped in either the screened or free-flow configuration, it is now ready for shipment and shall be loaded into the NAC-LWT cask in accordance with Section 7.1.1, Procedures for Wet Loading of LWR Fuel. If the transport canister is being shipped in the sealed configuration, complete steps 7-13 of this section.

7. Connect vent and drain lines to the respective quick-disconnect fittings on the sealed transport canister lid. The drain hose discharge should be directed to the plant drain system for radiological wastewater or another appropriate collection point.

8. Pressurize and purge the transport canister using helium. (Caution do not exceed 25 psig. while dewatering the transport canister.) Secure the purge once no fluid is observed exiting the discharge for at least 10 minutes.

9. Connect the vent line to a suitable vacuum pump. Maintain connection of drain line to the can, but isolate the line to allow vacuum drying of the sealed failed fuel can.

10. Evacuate the can to a pressure below 10 torr (13 mbar) and continue vacuum pumping for 10 minutes.

11. Stop and isolate the vacuum pump and monitor the cask cavity vacuum pressure for a minimum of 10 minutes. If the pressure rise is less than 5 torr (6.7 mbar), the cavity is verified as dry of free water. If the pressure rise is >5 torr (6.7 mbar), repeat vacuum drying until the dryness verification results are satisfactory.

12. Backfill the transport canister cavity with helium to 1 atmosphere (absolute), +1, -0 psi.

13. Disconnect the vent and drain lines from the transport canister.

14. The sealed transport canister is now ready for shipment and may be loaded into the NAC-LWT cask in accordance with Section 7.1.1.

7.1.9 Procedure for Wet Loading of TPBAR Consolidation Canister into the NAC-LWT Cask

This section describes the procedures for loading the NAC-LWT with a TPBAR consolidation canister. The consolidation canister can contain up to 300 TPBARs, two of which may be prefailed. Dunnage (i.e., spacer grids, stainless steel tubes, etc.) may be used in consolidation

canisters containing fewer than 300 TPBARs. The total weight and volume of the contents (i.e., dunnage and reduced number of TPBARs) must be less than, or equal to, the weight and volume of the full load of 300 TPBARs.

Appropriate radiological controls and procedures addressing tritium shall be utilized by the licensee, including appropriate personnel monitoring for tritium exposure.

NAC-LWT casks to be used for the transport TPBARs shall be configured as shown on Drawing No. 315-40-128, including Alternate B port covers.

1. Perform a receiving survey of the empty cask and inspect for damage. Verify, by cask serial number, that the cask is approved for TPBAR shipment.
2. Position a trailer in the designated cask unloading area. Set the trailer brakes and chock the wheels to prevent unintended movement. If site-specific conditions exist that require the trailer to move to allow the cask to be uprighted on its rotation trunnions, release brakes and remove the chocks when required to complete uprighting operations. If an ISO is used, it may be removed from the trailer and secured in the unloading area.
3. Remove the roof from the ISO container and open the front and rear ISO doors. Remove roof cross-members, if installed.

   Note: Verify that the package nameplate displays the package identification number, USA/9225/B(M)-96, as required by the CoC for TPBAR contents.
4. Perform a Health Physics survey of the cask and adjacent surfaces of the trailer.

   Note: A receiving survey of the cask and transporter must be performed as soon as practical after arrival at the site to assure compliance with 10 CFR 71.87(i) and 10 CFR 71.47, and to assure timely reporting of any reportable noncompliance.
5. Remove the top and bottom impact limiters.
6. Remove the cask tie-down strap.
7. Using the lifting yoke with the guides removed, engage the lifting trunnions. Raise the cask to vertical by rotating the cask rotation sockets on the rear cask supports, moving the crane and/or trailer as required to keep the lift yoke engaged to the trunnions and the cask engaged in the rear supports. When the cask is fully vertical, lift the cask from the supports and remove it from the trailer/container.
8. Place the cask in the decontamination pit or other designated area. Disengage the lifting yoke. Clean cask surfaces of road dirt as required for entry into the spent fuel pool.
9. Visually inspect the neutron shield tank fill, drain and level inspection plugs for signs of neutron shield fluid leakage. If leakage is detected, verify shield tank fluid level and correct, as required.
10. Remove the Alternate B vent and drain valve port covers. Prior to reinstallation of the port covers, replace the metallic O-ring seal with an approved spare and inspect

the Viton® O-ring seal for each port cover. If the Viton® O-ring shows any damage, replace it. Ensure that the replacement O-rings are properly installed and seated. Store the port covers to protect the seal surfaces. Visually inspect the valved quick-disconnect nipples and replace them, if necessary.

11. Remove closure lid bolts. Attach the lid lift slings to the closure lid. Remove the closure lid and set it on a support that is suitable for radiological control and for maintaining the cleanliness of the closure lid. Prior to reinstallation of the lid, carefully inspect the Teflon O-ring seal in the underside of the closure lid. If the O-ring shows any damage, replace it. Remove the metallic O-ring and replace it with an approved spare. Ensure that the replacement O-rings are properly installed and seated. Inspect the lid bolts and replace any that are damaged. Ensure that the TPBAR spacer is installed on the bottom of the cask lid and not damaged when the lid is set down.

12. Visually inspect the inner cavity for foreign material or damage. Install or verify the presence of the standard drain tube and the TPBAR basket assembly.

13 Fill the cask cavity with clean water. Install lift yoke arm guides and remote actuation components on the cask lifting yoke.

14. Engage the cask lifting yoke with the cask lifting trunnions and pick up the cask. Carefully lower the cask to the bottom of the cask loading area while spraying the cask down with clean water.

15. Disengage the lifting yoke from the cask and remove the yoke from the pool.

16. Identify the TPBAR consolidation canister to be loaded.

17. Pick up the consolidation canister using the required grapple system.

18. Position the container over the cask and then carefully lower it into the cask to avoid damage to the cask sealing surfaces. Orient the canister bail so that it is aligned with the drain tube location. Confirm that the container is fully seated, then release and raise the grapple to the full up position.

19. Position the cask lifting yoke over the cask closure lid. Attach the slings to the closure lid and cask lifting yoke. Lower the yoke over the cask.

20. Position the closure lid over the cask and slowly lower it into place allowing the consolidation canister bail to engage with the TPBAR spacer on the bottom of the lid. Use the cask and lid match marks as guides to properly align the lid. Visually confirm that the closure lid is seated.

21. Lower the cask handling yoke to slack the closure lid cables. Engage the lift yoke to the lifting trunnions and begin lifting.

    Note: Visually verify the yoke engagement before lifting the cask.

22. Raise the cask until the lid is slightly above the surface of the pool. At the option of the licensee/user, a number of closure lid bolts (4 to 12) may be installed hand tight.

23. Raise the cask clear of the pool, rinsing the yoke and cask with clean water.

24. Transfer the cask to the decontamination pit or other work area. Remove the yoke and lid lift slings.

25. Install and tighten the 12 closure lid bolts to 260 ± 20 ft-lb in three passes, using the torque sequence stamped on the closure lid.

26. At the option of the licensee/user, a 25 to 50 gallon clean water flush of the cask cavity may be performed by connecting a valved clean water line to the drain valve and a valved drain line to the vent valve. After the cavity flushing is completed, if performed, disconnect the water supply and drain lines.

27. Connect a gas supply line to the vent valve and the drain line to the drain valve.

28. Open the air, nitrogen or helium gas supply valve and pressurize the cask cavity (<30 psig) to force out the water. Continue to supply pressurized gas to the cask for a minimum of five minutes after the last residual free water discharges from the drain line. Remove the drain and gas supply lines and attach a vacuum drying system (VDS) to the cask vent valve.

29. Evacuate the cask cavity to a vacuum pressure of less than 10 torr (13 mbar) and continue vacuum pumping for a minimum of 15 minutes.

30. At the end of the vacuum pumping period, isolate the cask cavity from the vacuum pump and stop the pump. Monitor the cask cavity pressure for a minimum of ten (10) minutes. If the pressure rise is less than 5 torr (6.7 mbar), the cavity is verified as dry of free water. If the pressure rise >5 torr (6.7 mbar), repeat vacuum drying until the dryness verification results are satisfactory.

31. Backfill the cask cavity with helium to 0 psig (1 atmosphere, absolute), +1, -0 psi. Disconnect the VDS.

32. Perform the helium leakage test of the closure lid containment O-ring using a Helium Mass Spectrometer Leak Detector (He MSLD) in accordance with the requirements of Section 8.1.3.1, Steps 3 through 10.

33. Install, torque the high-strength bolts to 285 ± 15 inch-pounds, and helium leakage test the Alternate B vent and drain port covers to leaktight criteria in accordance with Section 8.1.3.3.

34. Decontaminate the cask. Survey the cask for surface contamination and radiation dose rates.

    Note: Ensure compliance with 10 CFR 71.87(i) and 10 CFR 71.47.

35. Remove lift yoke arm guides. Engage the cask lifting yoke to the lifting trunnions.

36. Lift the cask and position the cask rotation sockets in the rear rotation trunnions of the rear support structure. Carefully lower the cask to the horizontal transport orientation resting on the front saddle by moving the crane and/or trailer, as required, to maintain cask engagement to the rear supports.

37. Disengage the cask lifting yoke from the cask lifting trunnions and remove it from the area.

38. Install the cask tie-down strap. Install the top and bottom impact limiters.
39. Install tamper seal wire and number seal on the top attachment point of the top impact limiter.
40. Install roof cross-members, close ISO container doors, and replace ISO container roof.
41. Complete radiation and contamination surveys of the external surfaces of the package and record the data. Ensure removable contamination and radiation dose rate survey results comply with the limits specified in 10 CFR 71.87(i) and (j).
42. Measure the dose rate in millirems per hour at one meter from the package surface to determine the Transport Index (TI). Indicate the TI on the Radioactive Material labels applied to the package in accordance with 49 CFR 172, Subpart E.
43. Determine the appropriate Criticality Safety Index (CSI) assigned to the package contents in accordance with the CoC, and indicate the correct CSI on the Fissile Material label applied to the package per 49 CFR 172, Subpart E.
44. Apply appropriate placards to the transport vehicle in accordance with 49 CFR 172, Subpart F.
45. Complete the shipping documents and provide the carrier with instructions regarding the requirements for maintaining an exclusive use shipment.

7.1.10 Procedure for the Dry Loading of PULSTAR Fuel Into the NAC-LWT Cask

This section describes the procedures for loading the NAC-LWT cask with intact PULSTAR fuel assemblies, intact PULSTAR fuel rods in fuel rod inserts, and intact or damaged PULSTAR fuel assemblies, fuel rods, fuel debris, and nonfuel components of PULSTAR fuel assemblies in either sealed or screened PULSTAR cans. Up to 28 PULSTAR fuel assemblies, rod inserts, and sealed or screened cans can be loaded in the 28 MTR (four module × seven cells/module) basket assembly. The 28 MTR basket assembly consists of a base module, two intermediate modules, and a top module.

Damaged PULSTAR fuel assemblies, damaged fuel rods, fuel debris, and nonfuel components of fuel assemblies are required to be loaded in either a sealed failed fuel or screened PULSTAR can. Intact PULSTAR fuel rods may be loaded into either one of the cans at the option of the licensee. The PULSTAR cans are limited to being loaded in any cell in either the top or the base module. The top and base basket modules can also contain intact PULSTAR fuel assemblies and fuel rod inserts containing intact PULSTAR fuel rods.

The NAC-LWT cask will be loaded dry, utilizing a transfer cask for loading each of the four basket modules. The basket modules will be preloaded with the PULSTAR fuel contents. The

damaged fuel cans will be preloaded, closed, drained and dried, if applicable, prior to loading in either the top or base basket module. The PULSTAR cans shall be loaded and prepared for transport in accordance with the applicable steps of Section 7.1.7.

The NAC-LWT dry PULSTAR fuel loading and preparation for transport procedures are as follows.

1. Perform a receipt inspection of the empty cask and trailer/ISO container, inspecting for transport damage.
2. Position the trailer in the designated cask unloading area. Set the trailer brakes and chock the wheels to prevent unintended movement. If site-specific conditions exist that require the trailer to move to allow the cask to be uprighted on its rotation trunnions, release brakes and remove the chocks when required to complete uprighting operations. If an ISO container is used, it may be removed from the trailer and secured in the unloading area.
3. Remove the lid/top of the ISO container and remove any bracing.

   Note: Verify that the package nameplate displays the correct package identification number in accordance with the CoC.
4. Perform a Health Physics survey of the cask and adjacent surfaces of the trailer.

   Note: A receiving survey of the cask and transporter must be performed as soon as practical after arrival at the site to assure compliance with 10 CFR 71.87(i) and 10 CFR 71.47, and to assure timely reporting of any reportable noncompliance.
5. Remove the top and bottom impact limiters.
6. Remove the cask tie-down strap.
7. Using the lifting yoke with the guides removed, engage the lifting trunnions. Raise the cask to vertical by rotating the cask rotation sockets on the rear cask supports, moving the crane and/or trailer as required to keep the lift yoke engaged to the trunnions and the cask engaged in the rear supports. When the cask is fully vertical, lift the cask from the supports and remove it from the trailer/container.
8. Place the cask into the dry loading station.
9. Disengage the lift yoke.
10. Visually inspect the neutron shield tank fill, drain and level inspection plugs for signs of neutron shield fluid leakage. If leakage is detected or suspected, verify shield tank fluid level and correct, as required.
11. Remove the vent and drain port covers. Prior to reinstallation of the port covers, carefully inspect the port cover O-ring seals and, if the O-rings show any damage, replace them with approved spares. Ensure that the replacement O-rings are properly installed and seated. Visually inspect the vent and drain quick-disconnect nipples and replace them, if necessary.

Note: For Alternate B port covers, replace the metallic O-ring with an approved spare prior to reinstallation.

12. Remove closure lid bolts. Attach the lid lift slings to the closure lid. Remove the closure lid and set it on a support that is suitable for radiological control and for maintaining the cleanliness of the closure lid. Prior to reinstallation of the lid, carefully inspect the Teflon O-ring seal in the underside of the closure lid. If the O-ring shows any damage, replace it. Remove the metallic O-ring and replace it with an approved spare. Ensure that the replacement O-rings are properly installed and seated. Inspect the lid bolts and replace any that are damaged.

13. Visually inspect the cask cavity for foreign material or damage. Clean as necessary. Install or verify the presence of a correct drain tube assembly including alignment ring.

14. Install the required dry transfer system components to the top of the cask.

15. Position the shielded transfer cask components for basket module loading, as appropriate.

16. Identify the PULSTAR fuel assemblies, fuel rod holders, and fuel cans to be loaded, and verify that the PULSTAR fuel contents comply with the authorized content, heat load and quantity conditions of the CoC. Four basket modules (e.g., one base module, two intermediate modules, and a top module) constitute the 28 MTR basket assembly. Spacers will be used as provided to position the PULSTAR fuel contents, as required.

17. Each module is capable of containing up to seven intact fuel assemblies, fuel rod inserts or a PULSTAR fuel can. Fuel cans are restricted to being loaded into the top and base modules, where the cans may be loaded with intact fuel assemblies or fuel rod holders without loading preference. There are no limitations on loading location for intact fuel assemblies or fuel rod holders in any of the four basket modules.

    The base module is loaded into the cask first, followed by the two intermediate modules and the top module is loaded last.

18. Load the shielded transfer cask with the loaded base basket module.

19. Place the shielded transfer cask containing the base module unit onto the dry transfer system components positioned on the top of the cask.

20. Lower the fuel basket from the transfer cask into the NAC-LWT cask cavity.

21. Repeat the loading and transfer of loaded basket modules until the approved cask loading plan is completed.

22. Install the closure lid onto the cask using the dry transfer system. Visually verify that the lid is properly seated.

23. Remove the dry transfer cask system components from the top of the cask.

24. Install and torque the 12 closure lid bolts to 260 ± 20 ft-lb in three passes using the torquing sequence stamped on the lid.

25. Connect a gas supply line to the vent valve and a drain line to the drain valve.

26. Open the nitrogen or helium gas supply valve and pressurize the cask cavity (< 30 psig) to force any residual water out the drain line. Continue to supply pressurized gas to the cask for a minimum of five minutes after the last residual free water discharges form the drain. Remove the drain and gas supply lines and attach a vacuum drying system (VDS) to the vent.

27. Evacuate the cask cavity to less than or equal to 10 torr (13 mbar) and continue vacuum pumping for a minimum of 15 minutes.

28. At the end of the vacuum pumping period, isolate the cask cavity from the vacuum pump and stop the vacuum pump, and monitor the cask cavity pressure for a minimum of 10 minutes. If the pressure rise is less than 5 torr (6.7 torr), the cavity is verified dry of free water. If the pressure rise is >5 torr (6.7 mbar), continue vacuum drying until the dryness verification is completed satisfactorily.

29. Backfill the cask cavity with helium to 0 psig (1 atmosphere, absolute), +1, -0 psi. Disconnect the VDS from the vent valve.

30. Perform the helium leakage test of the closure lid containment O-ring using a Helium Mass Spectrometer Leak Detector (He MSLD) in accordance with the requirements of Section 8.1.3.1, Steps 3 through 10.

31. Install the vent and drain alternate port covers and torque the bolts to 100 ±10 inch-pounds.

32. If an alternate port cover containment O-ring seal was replaced, perform a helium leakage test on the affected port cover using a He MSLD in accordance with the requirements of Section 8.1.3.2.2.

33. If the alternate port cover containment seal was inspected and accepted for reuse, perform an air pressure drop leakage test on the affected port cover as follows.

    a. Install a pressure test fixture to the port cover test port, including a calibrated pressure gauge with a minimum sensitivity of 0.25 psi.

    b. Pressurize the port cover seal annulus to 15 psig, +1, -0 psi.

    c. Isolate the gas supply and observe the pressure gauge for a minimum of five minutes.

    d. The acceptance criterion for the test is no measurable drop in pressure during the minimum test time. An acceptable test assures that the minimum assembly verification leakage test sensitivity is achieved.

    Note: Alternate B port covers, if used, require the satisfactory completion of a helium maintenance leakage rate test to confirm the leaktight seal condition for each loaded transport. Install the Alternate B port cover, torque the high-strength bolts to 285 ± 15 inch-pounds, and perform the maintenance leakage rate test per the requirements of 8.1.3.3.

34. Decontaminate the cask. Survey the cask for surface contamination and radiation dose rates.

Note: Ensure compliance with 10 CFR 71.87(i) and 10 CFR 71.47.

35. Engage the cask lifting yoke to the lifting trunnions.
36. Lift the cask and position the cask rotation sockets in the rear rotation trunnions of the rear support structure. Carefully lower the cask to the horizontal transport orientation resting on the front saddle by moving the crane and/or the trailer as required to maintain cask engagement to the rear supports.
37. Disengage the lifting yoke from the lifting trunnions and remove it from the area.
38. Install the cask tie-down strap. Install the top and bottom impact limiters.
39. Install tamper seal wire and number seal on the top attachment point on the top impact limiter.
40. Install ISO container bracing and lid.
41. Complete radiation and contamination surveys of the external surfaces of the package and record the data. Ensure removable contamination and radiation dose rate survey results comply with the limits specified in 10 CFR 71.87(i) and (j).
42. Measure the dose rate in millirems per hour at one meter from the package surface to determine the Transport Index (TI). Indicate the TI on the Radioactive Material labels applied to the package in accordance with 49 CFR 172, Subpart E.
43. Determine the appropriate Criticality Safety Index (CSI) assigned to the package contents in accordance with the Certificate of Compliance, and indicate the correct CSI on the Fissile Material label applied to the package per 49 CFR 172, Subpart E.
44. Apply appropriate placards to the transport vehicle in accordance with 49 CFR 172, Subpart F.
45. Complete the shipping documents and provide the carrier with instructions regarding the requirements for maintaining an exclusive use shipment.

7.1.11 Procedure for Dry Loading of TPBAR Waste Container

This section describes the procedure for the loading of a TPBAR Waste Container into a NAC-LWT cask in a dry loading facility. Appropriate radiological controls and procedures addressing tritium shall be utilized by the licensee, including appropriate monitoring for tritium exposure.

NAC-LWT casks to be used for the transport of TPBARs shall be configured as shown on Drawing No. 315-40-128, including Alternate B port covers.

1. Perform a receiving survey of the ISO and trailer, and inspect for damage.
2. Position the trailer in the designated cask unloading area. Set the trailer brakes and chock the wheels to prevent unintended movement. If site-specific conditions exist that require the trailer to move to allow the cask to be uprighted on its rotation trunnions, release the brakes and remove the chocks when required to complete the uprighting operations. If

necessary, the ISO container may be removed from the trailer and secured in the unloading area.

3. Licensees shall receive and survey the package for radiation and removable contamination (for both gross beta-gamma and tritium) per 10 CFR 20 and 49 CFR 173. Record the survey results. If radiation or contamination levels exceed the limits of 49 CFR 173.441 or 173.443, respectively, the licensee shall notify the shipper and ensure the appropriate notifications are completed.
4. Remove the roof from the ISO container and open the front and rear ISO doors. Remove the ISO roof cross members, if installed.
5. Remove the top and bottom impact limiters.
6. Remove the cask tie-down strap. Complete the radiation and contamination surveys of the package as additional surfaces become accessible. Clean the cask surfaces as required for entry into the dry loading facility.
7. Using the cask lifting yoke with lift yoke arm guides removed, engage the lifting trunnions of the front end of the cask. Raise the cask to a vertical position on the rear cask supports, moving the crane and/or trailer, as required, to keep the cask engaged in the rear cask supports and the crane cable vertical. When the cask is vertical, block the trailer wheels and lift the cask from the container.
8. Place the cask in a transfer cart or a loading fixture. Disengage the lifting yoke.
9. Remove the weather seal from the cask lid.
10. Remove the Alternate B vent and drain valve port covers. Replace the metallic seal with an approved spare and inspect the Viton® O-ring seal on each cover. If the Viton® O-ring shows any damage, replace it. Ensure the replacement O-rings are properly installed and seated. Store the port cover to protect the seal surfaces. Visually inspect the vent and drain valved quick-disconnect nipples and replace, if necessary.
11. Loosen and remove all closure lid bolts.
12. Attach the lid removal fixture to the closure lid.
13. Use a transfer cart or loading fixture and move the cask into the loading position.
14. Remove the closure lid and set it on a support that is suitable for radiological control and for maintaining the cleanliness of the closure lid. Carefully inspect the Teflon O-ring seal in the underside of the closure lid. If the O-ring shows any damage, replace it. Remove the metallic O-ring and replace it with an approved spare. Ensure the replacement O-rings are properly installed and seated. Inspect the lid bolts and replace any that are damaged. Verify that the TPBAR spacer is installed on the bottom of the cask lid and not damaged when the lid is set down.
15. Install the seal surface protector in the lid cavity, if required.
16. Load the TPBAR Waste Container into the TPBAR basket positioned in the cask cavity using the required grapple or handling system. Verify the contents of the Waste Container comply with the CoC content conditions.

17. Remove the cask seal surface protector, if used, and install the cask closure lid.
18. Use the transfer cart or loading fixture and remove the cask from the loading area.
19. Inspect, install and tighten all 12 closure lid bolts to 260 ± 20 ft-lbs in three passes using the torque sequence indicated on the closure lid.
20. Connect a vacuum pump to the cask vent valve.
21. Install the drain port cover, if drain valve is not required for operations, and torque the port cover bolts to 285 ± 15 in-lbs.
22. Perform the helium mass spectrometer maintenance leakage rate test on the cask lid to leaktight criteria in accordance with the requirements of Section 8.1.3.1, Steps 3 through 10.
23. Following successful completion of the helium backfill and helium leak testing of the lid seal, monitor the cavity volume for tritium and record the results.

    Note: Tritium monitoring system shall have a minimum sensitivity of 5×10^{-3} micro curies/cc.
24. Install Alternate B port covers on the vent and drain openings and torque each port cover bolt to 285 ± 15 in-lbs. Perform a helium leakage rate test on each port cover to leaktight criteria in accordance with Section 8.1.3.3.
25. Decontaminate the cask. Survey the cask surface for gross beta-gamma and tritium removable contamination levels, and radiation dose rates.

    Note: Removable contamination levels and radiation levels shall comply with 49 CFR 173.443 and 173.441, respectively.

26. Using the cask lifting yoke with the guide arms removed, lift and position the cask in the rear cask supports on the ISO/trailer. Engage the trunnion pockets in the bottom end of the cask with the rotation trunnions. Lower the cask to rest on the front tiedown saddle, moving the crane, and/or trailer, as required, to keep the crane cables vertical. Disengage the cask lifting yoke from the cask lifting trunnions and set it aside.
27. Install and attach the cask tiedown strap. Install the cask top and bottom impact limiters.
28. Install a tamper-indicating seal to one of the top impact limiter ball lock pins.
29. Install roof cross members, close ISO container doors, and replace ISO container roof.
30. Complete a Health Physics survey on the external surface of the package and record the results. Complete dose rate measurements at the cask surface, at 1 meter from the cask surface, and at 2 meters from the vertical plane of the side of the transport vehicle. The maximum dose rate at 1 meter from the cask is the transport index (TI). Ensure compliance with 10 CFR 71.87(i) and observe the following criteria.

- If the dose rate is less than 2 mSv/h (200 mrem/hr) at all accessible points on the external surface of the cask, and the TI is less than 10, the package must meet the requirements of 10 CFR 71.47 (a).
- If the dose rate is greater than 2 mSv/h (200 mrem/hr), but is less than 10 mSv/h (1000 mrem/hr) at any point on the external surface of the package, or the TI is greater than 10, the package must be shipped as "exclusive use" and meet the requirements of 10 CFR 71.47 (b), (c) and (d). If the dose rate and shipping requirements of 10 CFR 71.47 (b), (1), (2), (3) and (4) cannot be met, the package cannot be shipped.

Note: 10 CFR 71.47 (c) and (d) require the shipper to provide the carrier with written instructions for maintenance of the exclusive use shipment. The instructions must be included with the shipping paper information. The instructions must be sufficient so that, when followed, they cause the carrier to avoid actions that unnecessarily delay delivery or unnecessarily result in increased radiation levels or radiation exposures to transport workers or members of the general public.

- If the dose rate is > 10 mSv/h (1000 mrem/hr) at any point on the external surface of the cask, the cask exceeds the limits of 10 CFR 71.47 and cannot be shipped.

31. Complete the shipping document, carrier instructions (if required), and apply appropriate placards and labels.

7.3 Procedures for Preparation of the Empty Package for Transport

The procedures for the preparation of the empty package for transport are as follows.

1. Verify that the closure lid bolts and the valve port cover bolts are torqued to the proper values as given in Table 7.3-1.
2. Verify that the cask cavity has been drained and is empty as directed in Section 7.2.
3. Decontaminate the cask and survey the cask for surface contamination and radiation dose rates.

   Note: Ensure compliance with 10 CFR 71.87(i) and 10 CFR 71.47.

4. Remove lift yoke arm guides, if installed. Engage the cask lifting yoke to the lifting trunnions.
5. Lift the cask and position the cask rotation sockets in the rear rotation trunnions of the rear support structure. Carefully lower the cask to the horizontal transport orientation resting on the front saddle by moving the crane and/or the trailer as required to maintain cask engagement to the rear supports.
6. Install the cask tie-down strap. Install the cask top and bottom impact limiters.
7. Install the personnel barrier on the trailer or close doors and install roof cross members (if provided) and roof on the ISO container.
8. Complete a Health Physics survey and record vehicle radiological compliance data. Ensure compliance with 10 CFR 71.87(i) and 10 CFR 71.47.
9. Complete the shipping documents and apply appropriate placards and labels.

Table 7.3-1 Bolt and Torque Table

Bolts[1]	No. Used	Fastener	Torque Value
Tiedown Bolts	8	1/2 - 13 UNC-2A Hex Head Bolt	410 ± 20 in-lb
Closure Lid Bolts	12	1 - 8 UNC-2A - Socket Head Cap Screw	260 ± 20 ft-lb
Closure Lid Test Port Plug	1	N/A	60 ± 6 in-lb
Alternate Port Cover Bolts	6	3/8 - 16 UNC-2A - Socket Head Cap Screws	100 ± 10 in-lb
Alternate B Port Cover Bolts	6	3/8 – 16 UNC – 2A - Socket Head Cap Screws	285 ± 15 in-lb
Port Cover Test Port Plug	2	N/A	60 ± 6 in-lb
Trunnion Plate Bolts	12	1/2 - 13 UNC-2A - Flat Socket Head Cap Screw	100 ± 5 in-lb

[1] All bolts shall be lightly lubricated using Nuclear Grade Pure Nickel NEVER-SEEZ or equivalent.

Chapter 8

Table of Contents

8 ACCEPTANCE TESTS AND MAINTENANCE PROGRAM 8.1-1
8.1 Acceptance Tests 8.1-1
8.1.1 Visual Inspection 8.1-1
8.1.2 Structural and Pressure Tests 8.1-2
8.1.3 Leak Tests 8.1-3
8.1.4 Component Tests 8.1-7
8.1.5 Tests for Shielding Integrity 8.1-9
8.1.6 Thermal Acceptance Tests 8.1-9
8.1.7 Neutron Absorber Tests 8.1-10
8.2 Maintenance Program 8.2-1
8.3 Appendix 8.3-1
8.3.1 General Description 8.3-1
8.3.2 Preparation 8.3-1
8.3.3 Pouring Procedure 8.3-2
8.3.4 Cooling Process 8.3-2

List of Figures

Figure 8.3-1 Lead Pour Configuration 8.3-3
Figure 8.3-2 Allowable Height Difference 8.3-4

List of Tables

Table 8.2-1 Maintenance Program Schedule 8.2-3

8 ACCEPTANCE TESTS AND MAINTENANCE PROGRAM

This chapter discusses the acceptance test and maintenance program to be used for the NAC-LWT cask, in compliance with 10 CFR 71, Subpart G.

Where required, specific procedures for testing will be developed in conjunction with the cask fabrication, in accordance with an approved Quality Assurance program.

8.1 Acceptance Tests

This section discusses the tests to be performed prior to first use of the cask.

Two port cover designs are available for use. The alternate port cover has a face seal containment boundary Viton® O-ring and a secondary test boundary O-ring seal along the barrel of the port cover. The alternate port cover was developed to facilitate ease in installation and removal in the field. The Alternate B port cover has two face seals on the inner end of the port cover, one metallic containment boundary seal and one Viton® test boundary seal. The Alternate B port cover was developed to provide a leaktight configuration for content conditions requiring a leaktight and/or high pressure containment boundary. The Alternate B port covers utilize higher strength bolts and a higher installed torque value.

To simplify the testing procedures below, when "port cover" or "port cover O-ring" is mentioned, it is intended to mean the port cover which has been chosen for that specific fabrication or cask configuration, either the alternate or the Alternate B and their respective O-rings. The different testing procedures are described in the applicable sections.

8.1.1 Visual Inspection

All components making up the cask lid, body, and baskets are to be visually inspected. This inspection verifies that all items are properly cleaned, free of nicks, gouges and damage, and are assembled in accordance with the license drawings. Each item is compared to the appropriate drawing to verify that it is in the correct orientation, position, and location.

All dirt, oil residue, metal chips or other forms of debris are removed by appropriate cleaning methods. Any entrapped water is removed. Any component found to deviate from its drawing is re-installed, replaced, or otherwise reworked as necessary in order to bring it into conformance.

Acceptance criteria require complete cask cleanliness, that foreign objects are removed, and that nicks or gouges that might preclude sealing or cask closure are not permitted. Valve and system components are visually inspected for leaks during pressure checks. Leaks are not permitted. Any case of noncompliance shall be corrected prior to final acceptance. All welds are visually inspected in accordance with the methods of Article 9, Section V of the "ASME Boiler and

Pressure Vessel Code." The acceptance criteria are in accordance with part NB-4424, Section III, and parts UW-35 or UW-36, Section VIII, of the "ASME Boiler and Pressure Vessel Code."

8.1.2 Structural and Pressure Tests

Following completion of fabrication, a hydrostatic test is performed on the cask cavity in accordance with the "ASME Boiler and Pressure Vessel Code," Section III, Subsection NB, Article NB-6000, to 209 (+5/-0) psig. This test is performed in accordance with a procedure prepared by the fabricator and approved by NAC International (NAC). For casks intended for transport of TPBARs, an additional post-fabrication hydrostatic test is performed to 450 +15/-0 psig (1.5 × MNOP of 289 psig = 434 psig). Alternate B port covers are installed for the 450 +15/-0 psig test. The test requirements and acceptance criteria for both tests are described below.

The cask cavity is hydrostatically tested using demineralized water. The test is conducted with the closure lid and valve port covers installed in accordance with the cask handling procedure for loaded casks, but with the quick-disconnect valves removed. During these two 30-minute pressure tests (conducted alternately with one port cover installed and the other removed for access to the cavity), an inspection is made to detect any visual or other evidence of leakage. Any evidence of leakage, including drop of gauge pressure, is cause for rejection.

Following the hydrostatic test, the cask cavity, lid, and port covers are dried and made ready for visual and dye penetrant testing (PT) inspections.

The cask cavity (containment boundary including lid and port covers) is visually inspected. All accessible welds within the cask cavity are examined by PT in accordance with ASME Code, Section V, Article 6, with acceptance criteria in accordance with ASME Code, Section III, Subsection NB, Article NB-5350. Any evidence of cracking, permanent deformation, or exceeding of material yield strength is cause for rejection.

Following completion of the fabrication pressure test or the postfabrication TPBAR-required pressure test, the cask containment boundary is leakage tested in accordance with the requirements of Section 8.1.3.

The neutron shield tank and the expansion tank are hydrostatically tested simultaneously, since they are joined by a siphon tube. The test is in accordance with the "ASME Boiler and Pressure Vessel Code," Section VIII, Division 1, to 248 (+5/-0) psig (165 psig maximum hypothetical accident pressure × 1.5). The neutron shield relief valve is replaced by a plug during the test. All tank seams and joints are inspected for evidence of leakage. The pressure is monitored by use of a pressure gauge. Any evidence of leakage or drop in pressure is cause for rejection. All accessible welds on the neutron shield structure are PT examined following the hydrostatic test.

Each of the two pairs of the cask lift trunnions is load tested. The load test is performed for one pair and, then, repeated for the other pair.

The test consists of applying a vertical load of 159,375 lbs + 3,000 lbs, -0 lbs (300 % of the maximum service load), to each trunnion pair. The load is applied in a vertical direction and equally distributed between the two trunnions.

This test may be carried out by the use of calibrated hydraulic rams combined with a beam, or the cask lifting yoke, and appropriate dead weight attached to the trunnion pair. The load is held for a minimum of 10 minutes.

Following the load test, all welds and material are visually inspected for plastic deformation and cracking and liquid penetrant inspected in accordance with the "ASME Boiler and Pressure Vessel Code," Section V, Article 6, and Section III, Division I, Subsection NF, Article NF-5350, as called for in ANSI N14.6-1993.

Any evidence of permanent deformation or any evidence of cracking, galling, or exceeding of yield strength is cause for rejection of that item.

The rotation sockets at the lower end of the cask are not load tested, being monolithic steel block with a suitably machined opening. Prior to first use, each socket is visually inspected for cleanliness and signs of deformation or other unsuitability. Accessible welds are inspected in accordance with the standards for the cask trunnions.

8.1.3 Leak Tests

The cask containment boundary is subjected to a fabrication leakage rate test, as described in the sections below, to verify containment following fabrication. The test is performed using helium inside the cask cavity and a helium mass spectrometer connected to the test port of the lid or one of the port covers. The mass spectrometer has a minimum sensitivity such that it is capable of detecting a leak rate of at least 1×10^{-9} ref cm^3/sec and is calibrated before and after the test with a standard having a known leak rate between 4×10^{-7} and 1×10^{-9} ref cm^3/sec. The procedure is performed between 40°F and 125°F and is temperature corrected. New O-rings are to be used. The basic procedures for the cask lid and for the vent and drain port covers are provided in the following sections.

A required maintenance leakage rate test adheres to the criteria listed above and follows the replacement of any containment component or seal. Containment components having single-use metallic containment seals (i.e., closure lid and Alternate B port covers) require a maintenance leakage rate test prior to each loaded transport. All containment components shall be subjected to a periodic leakage rate test annually while the cask is in service, or prior to returning the cask

to service if the period since the last leakage rate test exceeds 12 months. The acceptance criteria for the fabrication, maintenance, and periodic leakage rate tests appear in the following sections.

8.1.3.1 Closure Lid Leakage Rate Test

The following procedure shall be used to perform the fabrication, maintenance, periodic and pre-shipment leakage rate tests on the closure lid. Steps 1 and 2 are not performed for the pre-shipment leakage rate test performed during cask loading operations as described in Chapter 7.

1. Remove the vent and drain port covers and install the closure lid fitted with a new metallic seal on the cask body.
2. Install the 12 lid bolts and torque them to 260 ± 20 ft-lb in three passes, using the torque sequence stamped on the lid.
3. Connect the vacuum pump to the vent valve and evacuate the cask cavity to a pressure ≤100 torr (130 mbar).
4. Backfill the cask cavity with 99.9% (minimum) pure helium to atmospheric pressure.
5. Repeat Steps 3 and 4 to ensure that the cask cavity helium concentration is approximately 98%.
6. Remove the test port plug from the lid.
7. Connect a helium mass spectrometer leak detector (MSLD) to the cask lid test port. Start the helium MSLD.

   Note: The specific test procedure depends on the helium MSLD used. The test commences when a vacuum is pulled on the test port by the MSLD and the MSLD is placed in the "test" mode.

8. Monitor the test leakage rate until the leakage rate is stable or a minimum of 30 seconds.
9. The acceptance criteria for the helium leakage test for the various NAC-LWT contents are as follows:
   a. For contents not requiring a leaktight containment boundary, the measured leakage rate shall be $\leq 5.5 \times 10^{-7}$ cm^3/s (helium).
   b. For contents requiring a leaktight containment boundary (e.g., TPBAR contents, damaged TRIGA fuel and fuel debris in sealed damaged fuel cans [DFCs]), the measured leakage rate shall be $\leq 2 \times 10^{-7}$ cm^3/s (helium), (i.e., leaktight per ANSI N14.5-1997 under the test conditions).
10. Remove helium MSLD from test port plug and reinstall port plug and torque to 60 ± 6 inch-pounds.

8.1.3.2 Alternate Port Cover Leakage Rate Tests

8.1.3.2.1 Fabrication and Periodic Leakage Rate Tests

The following procedure shall be used to perform the fabrication and periodic leakage rate tests on the alternate port covers.

1. If the port cover leakage rate tests are not performed immediately following the closure lid leakage rate test of Section 8.1.3.1, evacuate the cask cavity to ≤ 100 torr (130 mbar) and backfill to atmospheric pressure with 99.9% (minimum) pure helium. Reevacuate to ≤ 100 torr (130 mbar) and perform the final helium backfill to atmospheric pressure.
2. Install new O-rings on the port cover.
3. Remove the port valve (either vent or drain valve) and install the port cover.
4. Install and torque the port cover bolts to 100 ± 10 inch-pounds.
5. Remove the test port plug from the port cover.
6. Connect a helium MSLD to the test port. Start the helium MSLD.
7. Monitor the test leakage rate until the leakage rate is stable or for a minimum of 30 seconds.
8. The acceptance criteria for the helium leakage rate test shall be $\leq 5.5 \times 10^{-7}$ cm^3/s.
9. Remove helium MSLD from the test port and reinstall port plug and torque to 60 ± 6 inch-pounds.
10. Repeat Steps 1 through 9 for the second port cover.

8.1.3.2.2 Maintenance Leakage Rate Test

The following procedure shall be used to perform the maintenance leakage rate test on the alternate port covers following the field replacement of a port cover containment face seal during cask loading operations.

1. Replace the affected seal(s).
2. Insert port cover in a plastic test bag and seal the bag to the cask body around the port opening using suitable tape.
3. Evacuate test bag and backfill with 99.9% (minimum) pure helium to one atmosphere absolute.
4. Reevacuate test bag and perform final helium backfill to one atmosphere absolute.
5. Without breaking the seal of the plastic bag to the cask body, insert the port cover into the port opening and hand tighten the bolts.
6. Torque the bolts to 100 ± 10 inch-pounds. Remove the plastic bag.
7. Remove the test port plug from the port plug.

8. Attach helium MSLD to the port cover test port and evacuate the volume between the seals.
9. Monitor the test leakage rate until stable or for a minimum of 30 seconds.
10. The test is acceptable if the measured leakage rate is $\leq 5.5 \times 10^{-7}$ cm^3/s, helium.
11. Remove helium MSLD from test port and reinstall the test port plug and torque to 60 ± 6 inch-pounds.

8.1.3.3 Alternate B Port Cover Leakage Rate Tests

8.1.3.3.1 Fabrication and Periodic Leakage Rate Tests

The following test procedure shall be used to perform the fabrication and periodic leakage rate tests for the Alternate B port cover. For NAC-LWT casks to be used to transport TPBARS, the fabrication leakage rate test shall be performed immediately following the post-fabrication hydrostatic test to 450 +15/-0 psig required for transport of TPBAR contents. The Alternate B port covers shall be installed for the 450 +15/-0 psig hydrostatic test. The periodic leakage rate test will be performed as part of a cask's annual maintenance and certification program.

1. If the Alternate B port cover leakage rate tests are not performed immediately after the closure lid leakage rate test in Section 8.1.3.1, evacuate the cask cavity to ≤ 100 torr (130 mbar) and perform the final helium backfill to atmospheric pressure with 99.9% (minimum) pure helium. Reevacuate to ≤ 100 torr (130 mbar) and perform final helium backfill to atmospheric pressure.
2. Install the new metallic O-ring on the Alternate B port cover.
3. Remove the port nipple (either vent or drain valve) and install the Alternate B port cover.
4. Install and torque the port cover bolts to 285 ± 15 inch-pounds.
5. Remove the test port plug from the port cover.
6. Connect a helium MSLD to the test port. Start the helium MSLD.
7. Monitor the test leakage rate until the leakage rate is stable or for a minimum of 30 seconds.
8. The acceptance criteria for the Alternate B port cover is that the measured leakage rate shall be $\leq 2 \times 10^{-7}$ cm^3/s (helium), i.e., leaktight per ANSI N14.5-1997.
9. Remove helium MSLD from the test port and reinstall the test port plug and torque to 60 ± 6 inch-pounds.
10. Repeat Steps 1 through 9 for the second Alternate B port cover.

8.1.3.3.2 Maintenance and Preshipment Leakage Rate Tests

The following maintenance leakage rate test procedure for the Alternate B port cover is used after metallic O-ring replacement during each cask loading operation, or if another containment component of an Alternate B port cover is replaced, for contents requiring leaktight containment per ANSI N14.5-1997, such as TPBARs and damaged TRIGA fuel in sealed DFCs.

1. Replace metallic seal.
2. Insert Alternate B port cover in plastic test bag and seal to cask body around port opening with suitable tape.
3. Evacuate test bag and backfill with 99.9% (minimum) pure helium to one atmosphere absolute.
4. Reevacuate test bag and perform final helium backfill to one atmosphere absolute.
5. Without breaking seal of plastic bag to the cask body, insert the Alternate B port cover into the port opening and tighten bolts hand tight.
6. Remove plastic bag and torque bolts to 285 ± 15 inch-pounds.
7. Remove test port plug from the Alternate B port cover.
8. Attach helium mass spectrometer to the Alternate B port cover test port and evacuate the volume between the seals.
9. Monitor the leakage rate test until stable or a minimum of 30 seconds.
10. The test is acceptable if the indicated leakage rate is $\leq 2 \times 10^{-7}$ cm^3/s (helium), i.e., leaktight per ANSI N14.5-1997.
11. Repeat Steps 1 through 10 for the second Alternate B port cover.

8.1.4 Component Tests

Tests performed on individual components are designed to ensure that the components meet the design requirements for correct operation of the cask system.

Acceptance criteria are functions of the purpose of the component being tested.

8.1.4.1 Valves, Pressure Relief Device, and Fluid Transport Devices

Overpressurization protection is afforded the neutron shield tank in the form of a relief valve that is designed to open at 165 psig (plus or minus 10 percent), and reseat. The relief valve is removed from the cask and hydraulically pressure tested using a calibrated system to verify relief valve opening and closing pressures. Failure to operate within tolerance is cause for rejection. Rejected valves are rebuilt or replaced and retested prior to use.

The cask cavity does not contain overpressurization protection because the maximum pressures developed in the worst case (fuel or TPBAR rupture) are well below the structural capability of the cask structure, lid, port covers, and seals.

The cask ports for vent/drain operations (two ports) contain valved quick disconnect fittings. These valves do not require testing to verify valved operation, because no credit is taken for these valves in the cask analyses. The valves provide a convenient method of attaching lines and fixtures, but serve no safety-related function.

The NAC-LWT cask package does not use rupture disks.

A siphon tube is used to connect the neutron shield tank to the neutron shield expansion tank. The tube is a passive device and allows expanding fluid to enter the expansion tank and returns the fluid as the liquid cools. It contains no moving parts and cannot be inspected after installation. The tube will be inspected for cleanliness and to verify that its passage is free of debris and clear prior to installation.

8.1.4.2 Gaskets

Cask closure lid and port cover O-rings will be hydrostatically pressure tested to verify suitability for use and for operation in the Maximum Normal Operating Pressure (MNOP) condition. The O-rings are arranged in pairs with an annulus between them. The annulus is connected by a drilled passageway to a test port. In the acceptance test, each of the three O-ring sets (one closure lid set, one vent port cover set, and one drain port cover set) is pressurized to 209 (+5/-0) psig for 30 minutes. Casks having TPBARs as approved contents are subjected to additional hydrostatic tests at 450 +15/-0 psig (one with the vent cover installed and one with the drain port cover installed). Loss of pressure or any other sign of leakage is cause for rejection.

A seal is installed at the outer edge of the lid, between the lid and the top cask forging, during transport. This seal is a weather seal and is not a pressure boundary. It is not pressure tested.

8.1.4.3 Sealed Canisters

Prior to underwater application of sealed canisters, each design shall be qualified by testing to demonstrate the ability of the canister to be vacuum dried and to stay sealed during subsequent underwater handling and storage. The qualification tests performed will simulate underwater vacuum drying and subsequent handling/storage. Acceptance criteria include no residual water in, or water ingress to, the sealed canister.

8.1.4.4 Miscellaneous

The cask impact limiter structures contain a two-part, aluminum honeycomb that is fabricated to have dynamic crush strengths of 3,500 psi. (plus 5 percent, minus 10 percent) and 250 psi (plus 10 percent, minus 10 percent), respectively. Sample lots of honeycomb material are subjected to dynamic crush testing to verify the crush strength of the impact limiter material. A dynamic crush strength of a sample outside of the allowable variation is cause for rejection of the batch lot of honeycomb material.

8.1.5 Tests for Shielding Integrity

A gamma scan inspection of all steel and lead shielding is conducted in order to verify shielding integrity. This inspection is performed on the cask body, including the cask bottom.

The test is conducted by continuous scanning or probing over 100 percent of all accessible surfaces, using a 3-inch detector and a ^{60}Co source of sufficient strength to produce a count rate that equals or exceeds three times the background count rate.

Scan path spacing is 2.5 inches. Scan speed is 4.5 feet-per-minute or less. All probing is on a 2-inch grid pattern (when using a 3-inch detector) and the count time is a minimum of one minute.

Acceptance is based on a lead and steel mock-up, where the material thicknesses are equivalent to the minimum thicknesses specified by the drawings. The lead and steel mock-up is produced using the same pouring technique as that approved for the cask.

Any area that produces a count rate over that established by the mock-up is considered rejected and must be corrected and retested prior to use.

Test equipment is checked before and after each use to ensure that shield test results are accurate.

8.1.6 Thermal Acceptance Tests

8.1.6.1 Thermal Test

A heat transfer acceptance test is conducted to test the integrity of the lead/stainless steel interface and to establish the heat rejection capability of the cask. The test is conducted with the neutron shield tank full[1] and the pressurized water reactor (PWR) basket located in the dry cask cavity.

[1] The neutron shield tank is filled with a liquid consisting of 58 weight percent ethylene glycol, 39 weight percent demineralized water and 3 weight percent potassium tetraborate ($K_2B_4O_7$).

The cask is internally heated at a rate of 8,500 BTU per hour (± 1,000 BTU per hour). A minimum of 12 internal and 12 external temperatures on the cask are measured with thermocouples. A test closure lid is used to allow penetrations for electric heaters and thermocouples. The steady state heat rate, transient cask temperatures, and ambient temperature are recorded. The test is conducted with the cask 3 feet (approximately) above the ground, horizontal and in still air.

8.1.6.2 Retest

If any equipment should fail during the test, such that the test must be aborted, the test is repeated.

8.1.6.3 Heat Source

The heat source for the thermal test is an electrical heater (cal-rod type) with an active length of 144 to 150 inches and is capable of generating at least 2.5 kilowatts.

8.1.7 Neutron Absorber Tests

8.1.7.1 General

Neutron absorber material in the form of borated stainless steel sheets is used in the TRIGA poison basket modules. After manufacturing, test samples from each batch of neutron absorber (poison) sheets shall be tested using neutron absorption techniques to verify the presence, proper distribution, and minimum weight percent of enriched boron. The tests shall be performed in accordance with approved written procedures.

8.1.7.2 Preparation of Samples for Spectroscopic Examination

Detailed written procedures to perform neutron absorption tests of each batch of neutron absorber sheets shall be established by the manufacturer and approved by NAC. For each batch of neutron absorber sheets, a sample shall be taken from each sheet. The samples shall be indelibly marked and recorded for identification.

At least 2 percent of the sheets in a batch shall be tested using a grid pattern of locations covering the entire surface of the sheet. Each of the remaining sheets in a batch shall be tested at one random location to ensure the presence of boron.

8.1.7.3 Neutron Absorption Test Performance

An approved facility with a neutron source and neutron detection capability shall be selected to perform the described tests. The tests will assure that the neutron absorption capacity of the material tested is equal to, or higher than, the given reference value and will verify the uniformity of boron distribution of a batch of neutron absorber sheets. The principle of measurement of neutron absorption is that the presence of boron results in a slowing down of neutron flux between the neutron sources, the reflector, and the neutron detector – depending on the material thickness and boron content.

Typical test equipment will consist of a neutron source/neutron detector, a reflector, and a counting instrument. The test equipment is calibrated using approved reference sheet(s), whose ^{10}B content has been checked and verified by an independent method such as chemical analysis. The highest permissible counting rate is determined from the neutron counting rates of the reference sheet(s), which should be ground to the minimum allowable plate thickness. This calibration process shall be repeated daily (at least once every 24 hours) while tests are being performed.

8.1.7.4 Acceptance Criteria

The neutron absorption test shall be considered acceptable if the neutron count determined for each test specimen is less than or equal to the highest permissible neutron count rate determined from the reference sheet(s). The poison sheets shall have a minimum of 1.04 weight-percent enriched boron content, with ^{10}B being a minimum of 93.88 atom percent. Any specimen not meeting the acceptance criteria for maximum neutron count shall be rejected and all of the sheets from that lot shall be similarly rejected.

8.2 Maintenance Program

Each NAC-LWT cask is subjected to a series of tests and inspections prior to each loaded shipment and annually, as shown in the Maintenance Program Schedule (Table 8.2-1).

Prior to each loaded transport, the metallic O-rings of the closure lid and Alternate B port covers, if used, are replaced. The O-ring seals of the alternate port covers are inspected and replaced as necessary. The cask cavity, trunnions, and all removable components (i.e., closure lid, port covers, attachment bolts, impact limiters, etc.) are visually inspected for damage. Following loading, the closure lid and port covers are installed and the bolting torqued. Leakage rate tests are performed on the closure lid and port covers as detailed in the cask loading procedures of Chapter 7.1. Depending on the port cover design and content conditions, helium leakage rate tests and air pressure drop tests verify the pre-shipment integrity of the containment boundary.

The completion of the annual maintenance and test program is required for each NAC-LWT cask while it is in service. The completion of the annual maintenance is documented on an annual inspection certification document. Each NAC-LWT cask must have a current annual certification before it can be used. The required annual cask maintenance test program is performed during or before the calendar month in which the annual program is due, but it is required to be performed no later than 30 days following the due date. During periods when the cask is not in use, the annual maintenance program may be deferred provided that the annual maintenance is completed and documented prior to the cask's next use.

For NAC-LWT casks to be used to transport TPBAR contents, a one-time post-fabrication hydrostatic test of the cask containment boundary shall be performed to a pressure of 450 + 15/-0 psig.

For NAC-LWT casks to be used to transport radioactive contents requiring a leaktight containment boundary (e.g., TPBARs, damaged TRIGA fuel in sealed DFCs, etc.), helium leakage rate testing to the leaktight criteria of ANSI N14.5-1997 is performed on the closure lid and Alternate B port cover containment seals.

The annual maintenance program certification documentation shall specifically identify that a NAC-LWT packaging has been qualified by testing for TPBAR contents and/or for a leaktight containment condition.

Engineering approval is required prior to making any repairs of damaged areas or areas that need refurbishing as a result of normal wear and tear. All such repairs shall be fully documented in accordance with NAC's approved Quality Assurance program. The replacement of valves, fittings, seals, thread fasteners, or use of calibrated pressure gauges are considered normal maintenance and do not require engineering approval.

Testing of the cask shielding and heat rejection capabilities is conducted during original packaging acceptance testing. The structures that provide shielding and heat rejection are passive and do not require verification during routine use of the package. Consequently, the efficiency of these systems is not tested during the annual maintenance program. Radiation surveys conducted at the time of cask loading provide verification of continued shielding effectiveness.

Testing of the neutron absorber material utilized in TRIGA poisoned basket modules are conducted prior to fabrication of the basket modules. The neutron absorber material is in the form of borated stainless steel sheets that are visually inspected for wear or damage prior to each use, and do not require routine maintenance.

Table 8.2-1 Maintenance Program Schedule

Cask Cavity (Including Port Cover and Lid Seals Annulus)	
Annually	Visual Inspection Lid and Port Cover Seal Replacement Helium Leak Tests (per Section 8.1.3)
Valve Port Covers	
Each Loaded Shipment	Visual Inspection Air Pressure Drop Test at 15 +1/-0 psig (Alternate port covers) Helium Leakage Testing (Alternate B port covers) Seal Replacement as Necessary[1]
Drain Line Gasket	
Each Shipment	Seal Replacement as Necessary
Annually	Seal Replacement
Water Jacket and Expansion Tank	
Annually	Visual Inspection Check Fluid Level, Specific Gravity, and Boron Concentration[2]
Each Shipment	Visually Inspect Fill, Drain and Inspection Port Plugs for Leakage
Cask Lid Bolts	
Each Shipment	Visually Inspect for Damage and Replace, as required.
Long Term Maintenance	Bolt replacement upon reaching 20-year life or 550 operational cycles.

[1] Helium leak testing (per Section 8.1.3.2.2) is required following replacement of alternate port cover seals. For Alternate B port covers, seal replacement and leak testing are required for each shipment per the requirements specified in the Operating Procedures in Chapter 7 and Section 8.1.3.2.2.

[2] The neutron shield fluid must be verified to contain greater than 1.0 wt % boron and the specific gravity must be such that the solution does not freeze at temperatures above -40°F.

Table 8.2-1 Maintenance Program Schedule (continued)

Water Jacket Relief Valve	
Annually	Replace With New Pre-set Valve, or Verify Opening and Reseating Pressure (Allowable variation is ± 10 psig of Nominal Valve Opening Pressure, 165 psig)
Fasteners, Valved Nipples, Washers, Reusable O-rings, and Helicoils	
Each Shipment	Inspect and Replace as necessary
Lid and Alternate B Port Cover Metallic O-rings	
Each Loaded Shipment	Replace and perform helium leakage rate testing to the criteria specified in Section 8.1.3, as applicable.

Chapter 9

Table of Contents

9.0 REFERENCES 9-1

9 REFERENCES

"AISC Manual of Steel Construction," 8th Edition, The American Institute of Steel Construction, Inc., 1990.

Alcoa Aluminum Handbook, Pittsburgh, PA, Aluminum Company of America, 1959.

"Aluminum Construction Manual," 2nd Edition, Section 3, The Aluminum Association, Washington, D.C., 1972.

"Annual Book of ASTM Standards," Section 3, Volume 03.01, American Society for Testing and Materials, 1986.

"'ANSYS' Computer Code for Large-Scale General Purpose Engineering Analysis," Swanson Analysis Systems, Inc., Houston, PA.

"ASME Boiler and Pressure Vessel Code," Section III, Subsection NG – Core Support Structures and Subsection NH – Class 1 – Components in Elevated Temperature Service, The American Society of Mechanical Engineers, 1995 with Addenda through 1997.

Baker, E.H., L. Kovalevsky, and F.L. Rish, Structural Analysis of Shells, New York, McGraw-Hill Book Co., December 1966.

Bates, O.K., "Thermal Conductivities of Aqueous Ethylene Glycol Solutions," St. Lawrence University, Canton, NY.

Baumeister, T. and L.S. Marks, Standard Handbook for Mechanical Engineers, 7th Edition, New York, McGraw-Hill Book Co., December 1966.

BAW-246, "NULIF – A Neutron Spectrum Generator, Few-Group Constant Calculator, and Depletion Code," Babcock & Wilcox, August 1976.

Bevington, P.R., Data Reduction and Error Analysis for the Physical Sciences, New York, McGraw-Hill Book Company.

Biggs, J.M., Introduction to Structural Dynamics, New York, McGraw-Hill Book Co., 1964.

Blake, A., "Charts Simplify Calculations for Moments and Deflections of Circular Arches," Machine Design, Cleveland, Penton Publishing Co., December 25, 1958.

Blodgett, O.W., Design of Welded Structures, Cleveland, James F. Lincoln Arc Welding Foundation, 1972.

Book of Standards, Part 7, American Society for Testing and Materials, 1970.

Bruhn, E.F., Analysis and Design of Flight Vehicle Structures, 1st Edition, Cincinnati, Tri-State Offset, Co., 1965.

Bucholz, J.A., "Scoping Design Analyses for Optimized Shipping Casks Containing 1-, 2-, 3-, 5-, 7-, or 10-year old PWR Spent Fuel," Oak Ridge National Laboratory, ORNL/CSD/TM-149, January 1983.

Bucholz, J.A., "XSDOSE: A Module for Calculating Fluxes and Dose Rates at Points Outside A Shield," Vol. 2, Sect. F4 of SCALE-4, August 1981.

Bucholz, J.A., et. Al., "SAS1: A One-Dimensional Shielding Analysis Module."

Cain, V.R. and R.E. Malenfant, "QAD-CG, The Combinatorial Geometry Version of the QAD-P5A Point Kernam Shielding Code," Bechtel Power Corporation, July 1977.

CCC-545, "SCALE-4, A Modular Code System for Performing Standardized Computer Analysis of Licensing Evaluation," ORNL, June 1990.

Chun, R., M. Witte, and M. Schwartz, "Dynamic Impact Effects on Spent Fuel Assemblies," UCID-21246, Lawrence Livermore National Laboratory, October 1987.

"Coefficient of Cubical Expansion for Glycol, Water, and Glycol-Water Solutions," E.I. du Pont de Nemours & Co., Inc., Wilmington, DE, 1963.

Cook, I. And R.S. Peckover, "Effective Thermal Conductivity of Debris Beds," Post Accident Debris Cooling, Proceedings of the Fifth Post Accident Heat Removal Information Exchange Meeting, 40-45, 1982.

Cragoe, C.S., "Properties of Ethylene Glycol and Its Aqueous Solutions," National Bureau of Standards.

DOE/ET/34014-10, "Extended Fuel Burnup Demonstration Program," U.S. Department of Energy, September 1983.

Ebner, M. A., "Stability of Uranium-Zirconium Hydride Spent Fuel in Wet Storage," INEL Report MAE-03-94, July, 1994.

Gallagher, C., "NL Industries Internal Test Report on Tensile Properties of Chemical Lead at Elevated Temperatures," Central Research Laboratory, Highstown, NJ, February 1976.

General Atomics Report UZR-28, "Uranium-Zirconium Hydride Fuels for TRIGA Reactors," 1997.

Gerard, G. and H. Becker, "Handbook of Structural Stability," Part III, TN3783, National Advisory Committee for Aeronautics, 1957.

Greene, N.M., J.L. Lucius, L.M. Petrie, W.E. Ford III, J.E. White, and R.Q. Wright, "AMPX – A Modular Code System for Generating Multigroup Neutron-Gamma Libraries from ENDF/B," ORNL/TM-3706, Oak Ridge National Laboratory, March 1976.

Greene, N.M. and L.M. Petrie, "XSDRNPM-S: A One-Dimensional Discrete Ordinates Code for Transport Analysis," Vol. 2, Sect. F3 of SCALE-4, January 1983.

Handbook of Chemistry and Physics, 49th Edition, Cleveland, OH, The Chemical Rubber Company, 1968.

Hermann, O.W. and R.M. Westfall, "ORIGEN-S: SCALE System Module to Calculate Fuel Depletion, Actinide Transmutation, Fission Product Buildup and Decay and Associated Radiation Source Terms," Vol. 2, Sect. F7 of SCALE-4, February 1989.

Hermann, O.W., "SAS2(H): A Coupled One-Dimensional Depletion and Shielding Analysis Code," Vol. 1, Sect. S2 of SCALE-4, June 1990.

IAEA Transportation Safety Standards (TS-R-1), "Regulations for the Safe Transport of Radioactive Material," June 2000.

Johnson, E.B. and R.K. Reedy, "Critical Experiments with SPERT-D Fuel Elements," ORNL-TM-1207, July 14, 1965.

Jordan, W.C., N.F. Landers, and L.M. Petrie, "Validation of KENO-Va Comparison with Critical Experiments," ORNL/CSD/TM-238, December 1986.

Juvinall, R.C., Stress, Strain, and Strength, New York, McGraw-Hill Book Co., 1967.

Kinsey, R., "Data Formats and Procedures for the Evaluated Nuclear Data File, ENDF," ENDF-102, Second Edition, Brookhaven National Laboratory, 1979.

Kreith, F., Principles of Heat Transfer,2nd Edition, Scranton, PA, International Textbook Company, 1965.

Manual of Steel Construction, 8th Edition, New York, American Institute of Steel Construction, Inc., 1990.

Mark's Standard Handbook for Mechanical Engineers, 9th Edition, McGraw-Hill Book Company, New York.

Merritt, F.S., Standard Handbook for Civil Engineers, McGraw-Hill Book Company, New York, 1968.

Metals Handbook, 9th Edition, American Society of Metals.

MIL-HDBK-5A, "Metallic Materials and Elements for Aerospace Vehicle Structures," Department of Defense, February 1966.

MIL-HDBK-5C, "Metallic Materials and Elements for Aerospace Vehicle Structures," Department of Defense, December 1978.

MIL-HDBK-5E, "Metallic Materials and Elements for Aerospace Vehicle Structures," Department of Defense, May 1989.

Nelms, H.A., "Effects of Jacket Physical Properties and Curvature on Puncture Resistance," Structural Analysis of Shipping Casks, Volume 3, ORNL/TM-1312, Oak Ridge National Laboratory, June 1968.

"Nuclear Systems Materials Handbook," Volume 1, Revision 1, Hanford Engineering Development Laboratories, Richland, WA, March 10, 1976.

NUREG-0612, "Control of Heavy Loads at Nuclear Power Plants," U.S. Nuclear Regulatory Commission, July 1980.

NUREG/CR-0733, "Critical Separation Between Sub-Critical Clusters of 4.29 w/o U^{235} Enriched UO_2 Rods in Water with Fixed Neutron Poisons," S.R. Bierman, B.M. Durst, E.D. Clayton, Battelle Pacific Northwest Laboratories, May 1978.

NUREG/CR-0200, Volume 2, Section F2, "SCALE-2 NITAWL-S, Resonance Self-Shielding by the Nordheim Method," N. M. Green and L. M. Petrie, Oak Ridge National Laboratory, October 1981.

NUREG/CR-6487, Anderson, B.L., Carlson, R.W., and Fisher, L.E., "Containment Analysis for Type B Packages Used to Transport Various Contents," Lawrence Livermore Laboratory, 1996.

NUREG/CR-0200, Volume 2, Section F3, "SCALE-2 XSDRNMP-S, A One Dimensional Discrete Ordinates Program for Transport Analysis," R.M. Westfall, L.M. Petrie, N.M. Greene, J.L. Lucius, Oak Ridge National Laboratory, June 1983.

NUREG/CR-0481, "An Assessment of Stress-Strain Data Suitable for Finite-Element Elastic-Plastic Analysis of Shipping Containers," H.J. Rack and G.A. Knorovsky, Sandia Laboratories, SAND77-1872, September 1978.

NUREG/CR-0796 PNL-2827, "Criticality Experiments with Sub-Critical Clusters of 2.35 and 4.29 w/o U^{235} Enriched UO_2 Rods in Water with Uranium or Lead Reflecting Walls," S.R. Bierman, B.M. Durst, E.D. Clayton, Battelle Pacific Northwest Laboratories, April 1979.

Paxton, H.C., Critical Dimensions of Systems Containing U^{235}, Pu^{239}, and U^{233}," TID-7028, June 1964.

Peery, D.J., Aircraft Structures, New York, McGraw-Hill Book Company, 1950.

Petrie, L.M. and N.F. Cross, "KENO-IV: An Improved Monte Carlo Criticality Program," ORNL-4938, Oak Ridge National Laboratory, November 1975.

PNL-2438, "Critical Separation Between Sub-Critical Clusters of 2.35 w/o U^{235} Enriched UO_2, Rods in Water with Fixed Neutron Poisons," S.R. Bierman, E.D. Clayton, B.M. Durst, Battelle Pacific Northwest Laboratories, October 1977.

Radiological Health Handbook, U.S. Department of Health, Education and Welfare, Rockville, MD, January 1970.

"Regulations for the Safe Transport of Radioactive Materials," Safety Series No. 6, Revised Edition, International Atomic Energy Agency, 1973.

"Research and Advanced Development Applied Mechanics," Volume 1, Engineering Data Sheets, Avco Corporation, 1962.

Resnick, R. and D. Halliday, Physics, 3rd Edition, Part 1, New York, John Wiley & Sons, 1977.

Roark, R.J., Formulas for Stress and Strain, 4th Edition, New York, McGraw-Hill, Inc., 1965.

Roark, R.J., and W.C. Young, Formulas for Stress and Strain, 5th Edition, New York, McGraw-Hill, Inc., 1975; 6th Edition, 1989.

Roddy, J.W., H.C. Claiborne, R.C. Ashline, P.J. Johnson, B.T. Rhyne, "Physical and Decay Characteristics of Commercial LWR Spent Fuel," ORNL/TM-9591/Vl-Rl, Oak Ridge National Laboratory, January 1986.

"Safety Analysis Report for the NLI-1/2 Spent Fuel Shipping Cask," Nuclear Assurance Corporation, USA/9010/B()F, December 12, 1985.

Schaeffer, N.M., Reactor Engineering for Nuclear Engineers, Springfield, VA, 1984.

"Screw-Thread Standards for Federal Services," U.S. Department of Commerce, 1957.

Shamban TFE O-Ring Seals, Spec. 22-53, Part No. S11214-460, W.S. Shamban & Co., Fort Wayne, IN, 1966.

Shappert, L.B., "Cask Designer's Guide: A Guide for the Design, Fabrication, and Operation of Shipping Casks for Nuclear Applications," ORNL-NSIC-68, Oak Ridge National Laboratories, February 1970.

Shappert, L.B., and W.D. Box, "The Drop Test Facility at the Oak Ridge National Laboratory: A Facility Available to Private Industry," Oak Ridge National Laboratory, Oak Ridge, TN.

Shigley, J.E., Mechanical Engineering Design, 3rd Edition, New York, McGraw-Hill, Inc., 1977.

Shigley, J.E., and C.R. Mischke, Standard Handbook of Machine Design, New York, 1986.

Singer, F.L., Strength of Materials, New York, Harper & Brothers, 1951.

"Table Speeds Calculation of Strength of Threads," Product Engineering, November 27, 1961.

Tang, J.S. "SAS4: A Monte Carlo Cask Shielding Analysis Module Using An Automated Biasing Procedure," March 1989.

"Test Plan: LWT Quarter-Scale Model Drop Tests," Document No. 315-P-01. Nuclear Assurance Corporation, May 31, 1988.

Tietz, T.E., "Determination of the Mechanical Properties of High Purity Lead and a 0.058% Copper-Lead Alloy," Stanford Research Institute, Menlo Park, CA, WADC Technical Report 57-695, ASTIA Document No. 151165, April 1958.

Timoshenko, S., Strength of Materials, 3rd Edition, New York, R. E. Krieger Publishing Co., 1976.

Timoshenko, S., Theory of Plates and Shells, 1st Edition, New York, McGraw-Hill Book Co., 1940.

Timoshenko and Gere, Theory of Elastic Stability, 2nd Edition, New York, McGraw-Hill, Inc., 1961.

Timoshenko, S. and Young, Theory of Structures, New York, McGraw-Hill Book Co., 1965.

Turner, W.D., D.C. Elrod, and I.I. Simon-Tov, "HEATING 5 - An IBM 360 Heat Conduction Program," Oak Ridge National Laboratory, ORNL/CSD/TM-15, March 1977.

Williamson, R.A. and R.R. Alvy, "Impact Effect of Fragments Striking Structural Elements," Holmes and Harver, Inc., 1973.

Childs, K.W., HEATING 7.2 User's Manual, Oak Ridge National Laboratory, ORNL/NUREG/CSD-2/V2/R5, September 1995.

Avallone, E. and T. Baumeister, Marks' Standard Handbook for Mechanical Engineers, 9th Edition, New York, McGraw-Hill Book Company, 1987.

"SCALE 4.3 Modular Code System for Performing Standardized Computer Analyses for Licensing Evaluation for Workstations and Personal Computers," CCC-545, September 1995.

Herman, O.W., "SAS2H: A Coupled One-Dimensional Depletion and Shielding Analysis Module," and C.V. Parks, ORNL/NUREG/CSD-2/V1/R5, Volume 1, Section S2, September. 1995.

Tang, S., "SAS4: A Monte Carlo Cask Shielding Analysis Module Using an Automated Biasing Procedure," ORNL/NUREG/CSD-2/V1/R5, Volume 1, Section S4, September, 1995.

Bucholz, J.A., Landers, N.F., and Petrie, L.M., ORNL/NUREG/CSD-2/V3/R5, Section M7, "The Material Information Processor For Scale," September 1995.

Greene, M., Westfall, R.M., and L.M. Petrie, ORNL/NUREG/CSD-2/V2/R5, "NITAWL-II: Scale System Module For Performing Resonance Shielding And Working Library Production" September 1995.

Jordan, W.C., ORNL/NUREG/CSD-2/V3/R5, Section M4, "Scale Cross-Section Libraries," September 1995.

Landers, N. F., and Petrie L.M, ORNL/NUREG/CSD-2/V1/R5, Section C4, "CSAS: Control Module For Enhanced Criticality Safety Analysis Sequences," September 1995.

Mele, Ravink and Trkov, "TRIGA Mark II Benchmark Experiment, Part I Steady State Operation," Jozef Stefan Institute, Nuclear Technology, Vol. 105, January 1994.

Petrie L.M., and Landers, N.F., ORNL/NUREG/CSD-2/V2/R5, Section F11, "KENO-Va: An Improved Monte Carlo Criticality Program with Supergrouping," September 1995.

Tomsio, M., "Characterization of Triga Fuel," ORNL/Sub/86-22047/3, GA-C18542, Oak Ridge National Laboratory, Oak Ridge, Tennessee, October 1986.

Krieth, F., and Bohn, M.S., "Principals of Heat Transfer," 5th Edition, West Publishing Company, 1993.

Incropera, F.P., and DeWitt, D.P., "Fundamentals of Heat and Mass Transfer," 4th Edition, John Wiley and Sons, 1996.

Owen, D.B., "Factors for One-Sided Tolerance Limits and for Variables Sampling Plans," SCR-607, 1963.

ANSI N14.5-1987, "American National Standard for Radioactive Materials - Leakage Tests on Packages for Shipment," American National Standards Institute, 1987.

ANSI/ANS - 8.1-1983, "Nuclear Criticality Safety in Operations with Fissionable Materials Outside Reactors."

ANSI/ANS - 8.17-1984, "Criticality Safety Criteria for the Handling, Storage, and Transportation of LWR Fuel Outside Reactors."

Bierman, S.R., Clayton, E.D., "Criticality Experiments with Subcritical Clusters of 2.35 w/o and 4.31 w/o ^{235}U Enriched UO_2 Rods in Water at a Water-to-Fuel Volume Ratio of 1.6," NUREG/CR-1547, July 1980.

Baldwin, N.M., Hoovler, G.S., Eng, R.L., and Welfare, F.G., "Critical Experiments Supporting Close Proximity Water Storage of Power Reactor Fuel," B&W-1484-7, July 1979.

Bierman, S.R., and E.D. Clayton, "Criticality Experiments with Subcritical Clusters of 2.35 w/o and 4.31 w/o ^{235}U Enriched UO_2 Rods in Water with Steel Reflecting Walls," Nuclear Technology, Volume 54, pp. 131-144, August 1981.

Bierman, S.R., Durst, B.M., and Clayton, E.D., "Criticality Experiments with Subcritical Clusters of 2.35 and 4.31 w/o ^{235}U Enriched UO_2 Rods in Water with Uranium or Lead Reflecting Walls," NUREG/CR-0796, April 1979.

Bierman, S.R., "Criticality Experiments to Provide Benchmark Data on Neutron Flux Traps," PNL-6205/UC-714, June 1988.

Manaranche, J.C. et al, "Dissolution and Storage Experiment with 4.75 w/o ^{235}U Enriched UO_2 Rods," Nuclear Technology, Volume 50, September 1980.

Machinery's Handbook, 25th Edition, Industrial Press, Inc., New York, NY, 1996.

BISCO Products Data, "FPC Fireblock Silicone Foam," BISCO Products, Inc., Park Ridge, IL, February 1988.

Letter from Rogers Corporation, Bisco Materials Unit, dated February 2, 1999, from Daniel J. Kubrick.

Interim Staff Guidance-11 (ISG-11), Revision 1, "Transportation and Storage of Spent Fuel Having Burnups in Excess of 45 GWd/MTU," Nuclear Regulatory Commission, May 2000.

Holometrix Micromet test report NCN-2, dated May 2000.

Ugural, A.C. and Fenster, S.K., "Advanced Strength and Applied Elasticity," Second Edition, Elsevier Science Publishing Company, New York, New York, 1987.

NAC Specification 315-S-09, "O-Ring Temperature Testing for the LWT Alternate Port Cover," Revision 0, February 2000.

"HTGR/RERTR Fuel Materials Characterization and Packaging Report," PC-00384/1, General Atomics, San Diego, CA, April 2002.

UNIFRAX Product Specifications, Fiberfrax® Ceramic Fiber Paper, C-1423, Unifrax Corporation, Niagara Falls, NY, June 1996.

LLNL Report UCRL-53441, "Review of Hydrogen Isotope Permeability Through Materials"

RSIC Computer Code Collection, *ORIGEN2.1; Isotope Generation and Depletion Code – Matrix Exponential Method,* CCC-371, Oak Ridge National Laboratory, Oak Ridge TN, 1996.

Y.K. Sakamoto and M. Sugisaki, "Fusion Science and Technology," Vol. 41, pp 912-914, May 2002.

"Aluminum Standards and Data," Table 2.2, The Aluminum Association, Washington, DC, 1997.

Blake, Alexander, "Practical Stress Analysis in Engineering Design," 2nd Edition, Marcel Dekker Inc., New York, 1990.