NAC INTERNATIONAL

Atlanta Corporate Headquarters
3930 East Jones Bridge Road, Suite 200
Norcross, GA 30092
Phone 770-447-1144
Fax 770-447-1797
www.nacintl.com

September 29, 2009

U.S. Nuclear Regulatory Commission
11555 Rockville Pike
Rockville, MD 20852-2738

Attn: Document Control Desk

Subject: Request for an Amendment of Certificate of Compliance (CoC) No. 1015 for the NAC-UMS® Universal Storage System to Incorporate the NAC UNITAD Storage System

Docket No. 72-1015

References:
1. Certificate of Compliance No. 1015 for the NAC International, Inc. Universal Storage System (NAC-UMS®), U.S. Nuclear Regulatory Commission (NRC), Amendment 5, January 12, 2009
2. Final Safety Analysis Report (FSAR) for the UMS® Universal Storage System, Revision 8, NAC International, February, 2009

NAC International (NAC) herewith submits a request for approval of an Amendment to the NAC-UMS® CoC (Reference 1) and applicable Technical Specifications to incorporate, under Amendment 6, the UNITAD Storage System.

The United States Department of Energy (DOE) Office of Civilian Radioactive Waste Management (OCRWM) has contracted NAC to design, license (obtain NRC 10 CFR 72 Certificate or Amendment), and demonstrate a Transportation, Aging and Disposal (TAD) Canister-Based System for commercial PWR spent nuclear fuel. NAC has developed the UNITAD Storage System based on its currently licensed NAC-UMS® Universal Storage System. The UNITAD Storage System design characteristics and NAC's design approach was presented to the NRC Staff in a presubmittal meeting on September 23, 2009.

This submittal includes eight copies of the UNITAD Revision 09A changed pages for the UMS® FSAR. NAC has prepared this amendment request based on Revision 8 of the UMS® FSAR. The UNITAD Storage System specific information is contained in a specific appendix in each chapter of the UMS® FSAR with the exception of Chapter 12, Technical Specifications, where the UNITAD Storage System's requirements and limitations are incorporated into the existing text and revision bars mark the requested changes. Since all the UNITAD specific appendices represent new text, no revision bars have been added to these requested changes. UNITAD Revision 09A pages of the UMS® FSAR chapter Table of Contents are also provided with revision bars to indicate the UNITAD appendices.

ED20090094

NMSS01
NMSS

The UNITAD appendices incorporate the requested amendment changes. This submittal also includes 18 new license drawings provided as part of Appendix 1.A depicting the UNITAD Storage System and its components.

In accordance with NAC licensing document control procedures, the proposed FSAR revision is numbered to uniquely identify the applicable changed pages (UNITAD Revision 09A). An updated List of Effective Pages is provided for the entire UMS® FSAR. Upon final approval, the changed pages will be reformatted, assigned the next appropriate revision number, and incorporated into an updated revision of the NAC-UMS® FSAR.

Approval and incorporation of the proposed changes will provide a TAD Canister Based System for PWR licensees in accordance with the requirements of the Department of Energy and 10 CFR 72, and provide licensees/cask users greater operational flexibility in preparing canisters for storing their spent fuel. The proposed changes will have no impact on current NAC-UMS® System users.

Based on current acceptance review practices and the NRC's timeliness goals, as published in RIS 2005-27, Rev. 1, NAC hereby requests receipt acknowledgment of this amendment request within 60 days of receipt of this submittal, a draft CoC and SER/draft Technical Specifications to be completed by December 2010, and a final rule to be effective in May 2011 (Direct Final Rule).

If you have any comments or questions, please contact me on my direct line at (678) 328-1274.

Sincerely,

Anthony L. Patko
Director, Licensing
Engineering

Enclosures

September 2009

Revision 09A

NAC-UMS®

Universal MPC System

FINAL SAFETY ANALYSIS REPORT

UNITAD Storage Amendment

Docket No. 72-1015

NAC INTERNATIONAL

Atlanta Corporate Headquarters: 3930 East Jones Bridge Road, Norcross, Georgia 30092 USA
Phone 770-447-1144, Fax 770-447-1797, www.nacintl.com

List of Effective Pages

Chapter 1

1-i ..... UNITAD Revision 09A
1-ii ..... UNITAD Revision 09A
1-1 ..... Revision 0
1-2 ..... Revision 5
1-3 ..... Revision 8
1-4 ..... Revision 8
1-5 ..... Revision 8
1-6 ..... Revision 8
1-7 ..... Revision 8
1-8 ..... Revision 8
1-9 ..... Revision 8
1.1-1 ..... Revision 3
1.1-2 ..... Revision 4
1.1-3 ..... Revision 3
1.1-4 ..... Revision 0
1.2-1 ..... Revision 3
1.2-2 ..... Revision 3
1.2-3 ..... Revision 8
1.2-4 ..... Revision 3
1.2-5 ..... Revision 3
1.2-6 ..... Revision 3
1.2-7 ..... Revision 8
1.2-8 ..... Revision 3
1.2-9 ..... Revision 3
1.2-10 ..... Revision 8
1.2-11 ..... Revision 6
1.2-12 ..... Revision 6
1.2-13 ..... Revision 8
1.2-14 ..... Revision 6
1.2-15 ..... Revision 6
1.2-16 ..... Revision 6
1.2-17 ..... Revision 6
1.2-18 ..... Revision 6
1.2-19 ..... Revision 6
1.2-20 ..... Revision 6
1.2-21 ..... Revision 6
1.2-22 ..... Revision 6
1.2-23 ..... Revision 6
1.2-24 ..... Revision 6
1.2-25 ..... Revision 6
1.2-26 ..... Revision 6
1.2-27 ..... Revision 6
1.2-28 ..... Revision 7
1.2-29 ..... Revision 6
1.3-1 ..... Revision 4
1.3-2 ..... Revision 5
1.3-3 ..... Revision 4
1.4-1 ..... Revision 0
1.4-2 ..... Revision 0
1.5-1 ..... Revision 0
1.5-2 ..... Revision 8
1.5-3 ..... Revision 0
1.5-4 ..... Revision 0
1.5-5 ..... Revision 8
1.5-6 ..... Revision 0
1.5-7 ..... Revision 0
1.5-8 ..... Revision 6
1.5-9 ..... Revision 3
1.5-10 ..... Revision 0
1.5-11 ..... Revision 3
1.5-12 ..... Revision 0
1.5-13 ..... Revision 0
1.5-14 ..... Revision 0
1.5-15 ..... Revision 0
1.5-16 ..... Revision 0
1.5-17 ..... Revision 3
1.5-18 ..... Revision 0

List of Effective Pages (continued)

1.5-19 ..... Revision 0
1.5-20 ..... Revision 0
1.5-21 ..... Revision 6
1.5-22 ..... Revision 4
1.5-23 ..... Revision 0
1.5-24 ..... Revision 0
1.5-25 ..... Revision 0
1.5-26 ..... Revision 0
1.5-27 ..... Revision 3
1.5-28 ..... Revision 8
1.5-29 ..... Revision 0
1.5-30 ..... Revision 8
1.5-31 ..... Revision 0
1.5-32 ..... Revision 0
1.5-33 ..... Revision 3
1.5-34 ..... Revision 5
1.5-35 ..... Revision 0
1.5-36 ..... Revision 3
1.5-37 ..... Amendment 2
1.5-38 ..... Revision 8
1.5-39 ..... Revision 0
1.5-40 ..... Revision 0
1.5-41 ..... Revision 0
1.5-42 ..... Revision 0
1.5-43 ..... Revision 0
1.5-44 ..... Revision 8
1.5-45 ..... Revision 0
1.5-46 ..... Revision 0
1.5-47 ..... Revision 3
1.5-48 ..... Revision 8
1.5-49 ..... Revision 0
1.5-50 ..... Revision 0
1.5-51 ..... Revision 0
1.5-52 ..... Revision 0
1.5-53 ..... Revision 0
1.5-54 ..... Revision 0
1.6-1 ..... Revision 8
1.7-1 ..... Revision 3
1.7-2 ..... Revision 4
1.7-3 ..... Revision 4
1.8-1 ..... Revision 8
1.8-2 ..... Revision 7

31 drawings (see Section 1.8)

Appendix 1.A

1.A-i & 1.A-ii
UNITAD Revision 09A
1.A-1 through 1.A-6
UNITAD Revision 09A
1.A.1-1 through 1.A.1-4
UNITAD Revision 09A
1.A.2-1 through 1.A.2-13
UNITAD Revision 09A
1.A.3-1 UNITAD Revision 09A
1.A.4-1 & 1.A.4-2
UNITAD Revision 09A
1.A.5-1 & 1.A.5-2
UNITAD Revision 09A
1.A.6-1 UNITAD Revision 09A

18 drawings (see Section 1.A.6)

Chapter 2

2-i ..... UNITAD Revision 09A
2-ii ..... UNITAD Revision 09A
2-iii ..... UNITAD Revision 09A
2-iv ..... UNITAD Revision 09A
2-1 ..... Revision 8

List of Effective Pages (continued)

2-2 ..... Revision 5
2-3 ..... Revision 3
2.1-1 ..... Revision 5
2.1.1-1 ..... Revision 8
2.1.1-2 ..... Revision 8
2.1.1-3 ..... Revision 8
2.1.1-4 ..... Revision 8
2.1.2-1 ..... Revision 8
2.1.2-2 ..... Revision 8
2.1.2-3 ..... Revision 8
2.1.3-1 ..... Revision 8
2.1.3-2 ..... Revision 8
2.1.3-3 ..... Revision 8
2.1.3-4 ..... Revision 8
2.1.3-5 ..... Revision 3
2.1.3-6 ..... Revision 8
2.1.3-7 ..... Revision 3
2.1.3-8 ..... Revision 3
2.1.3-9 ..... Revision 5
2.1.3-10 ..... Revision 3
2.1.3-11 ..... Revision 3
2.1.3-12 ..... Revision 3
2.1.3-13 ..... Revision 3
2.1.3-14 ..... Revision 3
2.2-1 ..... Amendment 1
2.2-2 ..... Revision 0
2.2-3 ..... Revision 0
2.2-4 ..... Revision 5
2.2-5 ..... Revision 3
2.2-6 ..... Revision 0
2.2-7 ..... Revision 0
2.2-8 ..... Revision 0
2.2-9 ..... Revision 0
2.2-10 ..... Revision 0
2.2-11 ..... Revision 3
2.3-1 ..... Amendment 2
2.3-2 ..... Amendment 2
2.3-3 ..... Revision 3
2.3-4 ..... Revision 3
2.3-5 ..... Revision 6
2.3-6 ..... Revision 6
2.3-7 ..... Revision 0
2.3-8 ..... Revision 3
2.3-9 ..... Revision 3
2.3-10 ..... Revision 0
2.3-11 ..... Revision 5
2.3-12 ..... Revision 3
2.3-13 ..... Revision 3
2.3-14 ..... Revision 3
2.3-15 ..... Revision 3
2.3-16 ..... Revision 3
2.3-17 ..... Revision 3
2.3-18 ..... Revision 7
2.3-19 ..... Revision 3
2.3-20 ..... Revision 3
2.4-1 ..... Revision 3
2.4-2 ..... Revision 0
2.4-3 ..... Revision 0
2.4-4 ..... Revision 0
2.5-1 ..... Revision 3
2.5-2 ..... Revision 3

Appendix 2.A

2.A-i & 2.A-ii
UNITAD Revision 09A
2.A-1 UNITAD Revision 09A
2.A.1-1 UNITAD Revision 09A
2.A.2-1 through 2.A.2-7
UNITAD Revision 09A

List of Effective Pages (continued)

2.A.3-1 UNITAD Revision 09A
2.A.4-1 & 2.A.4-2 UNITAD Revision 09A
2.A.5-1 UNITAD Revision 09A
2.A.6-1 UNITAD Revision 09A

Chapter 3

3-i ..... UNITAD Revision 09A
3-ii ..... UNITAD Revision 09A
3-iii ..... UNITAD Revision 09A
3-iv ..... UNITAD Revision 09A
3-v ..... UNITAD Revision 09A
3-vi ..... UNITAD Revision 09A
3-vii ..... UNITAD Revision 09A
3-viii ..... UNITAD Revision 09A
3.1-1 ..... Revision 3
3.1-2 ..... Revision 3
3.1-3 ..... Revision 3
3.1-4 ..... Revision 3
3.1-5 ..... Revision 3
3.1-6 ..... Revision 3
3.1-7 ..... Revision 3
3.2-1 ..... Revision 0
3.2-2 ..... Revision 3
3.2-3 ..... Revision 3
3.2-4 ..... Revision 3
3.3-1 ..... Revision 3
3.3-2 ..... Revision 3
3.3-3 ..... Revision 3
3.3-4 ..... Revision 3
3.3-5 ..... Revision 3
3.3-6 ..... Revision 3
3.3-7 ..... Revision 3
3.3-8 ..... Revision 3
3.3-9 ..... Revision 3
3.3-10 ..... Revision 3
3.3-11 ..... Revision 3
3.3-12 ..... Revision 3
3.3-13 ..... Revision 3
3.3-14 ..... Revision 3
3.3-15 ..... Revision 3
3.3-16 ..... Revision 8
3.4.1-1 ..... Amendment 2
3.4.1-2 ..... Revision 4
3.4.1-3 ..... Amendment 2
3.4.1-4 ..... Amendment 2
3.4.1-5 ..... Revision 3
3.4.1-6 ..... Revision 4
3.4.1-7 ..... Revision 4
3.4.1-8 ..... Revision 4
3.4.1-9 ..... Revision 3
3.4.1-10 ..... Revision 3
3.4.1-11 ..... Revision 3
3.4.1-12 ..... Revision 3
3.4.2-1 ..... Revision 8
3.4.2-2 ..... Revision 4
3.4.3-1 ..... Revision 4
3.4.3-2 ..... Revision 3
3.4.3-3 ..... Revision 3
3.4.3-4 ..... Revision 0
3.4.3-5 ..... Revision 3
3.4.3-6 ..... Revision 3
3.4.3-7 ..... Revision 3
3.4.3-8 ..... Revision 3
3.4.3-9 ..... Revision 3
3.4.3-10 ..... Revision 3
3.4.3-11 ..... Revision 3
3.4.3-12 ..... Revision 3
3.4.3-13 ..... Revision 3
3.4.3-14 ..... Revision 3

List of Effective Pages (continued)

3.4.3-15 ..... Revision 3
3.4.3-16 ..... Revision 3
3.4.3-17 ..... Revision 3
3.4.3-18 ..... Revision 3
3.4.3-19 ..... Revision 3
3.4.3-20 ..... Revision 3
3.4.3-21 ..... Revision 3
3.4.3-22 ..... Revision 3
3.4.3-23 ..... Revision 6
3.4.3-24 ..... Revision 6
3.4.3-25 ..... Revision 6
3.4.3-26 ..... Revision 6
3.4.3-27 ..... Revision 3
3.4.3-28 ..... Revision 4
3.4.3-29 ..... Revision 3
3.4.3-30 ..... Revision 3
3.4.3-31 ..... Revision 3
3.4.3-32 ..... Revision 3
3.4.3-33 ..... Revision 3
3.4.3-34 ..... Revision 3
3.4.3-35 ..... Revision 3
3.4.3-36 ..... Revision 3
3.4.3-37 ..... Revision 3
3.4.3-38 ..... Revision 3
3.4.3-39 ..... Revision 3
3.4.3-40 ..... Revision 3
3.4.3-41 ..... Revision 3
3.4.3-42 ..... Revision 3
3.4.3-43 ..... Revision 3
3.4.3-44 ..... Revision 3
3.4.3-45 ..... Revision 3
3.4.3-46 ..... Revision 3
3.4.3-47 ..... Revision 3
3.4.3-48 ..... Revision 3
3.4.3-49 ..... Revision 3
3.4.3-50 ..... Revision 3
3.4.3-51 ..... Revision 3
3.4.3-52 ..... Revision 3
3.4.3-53 ..... Revision 3
3.4.3-54 ..... Revision 3
3.4.3-55 ..... Revision 3
3.4.3-56 ..... Revision 3
3.4.3-57 ..... Revision 3
3.4.3-58 ..... Revision 3
3.4.3-59 ..... Revision 3
3.4.3-60 ..... Revision 3
3.4.3-61 ..... Revision 3
3.4.3-62 ..... Revision 3
3.4.3-63 ..... Revision 3
3.4.3-64 ..... Revision 3
3.4.3-65 ..... Revision 3
3.4.3-66 ..... Revision 3
3.4.3-67 ..... Revision 3
3.4.3-68 ..... Revision 3
3.4.3-69 ..... Revision 3
3.4.3-70 ..... Revision 3
3.4.3-71 ..... Revision 3
3.4.3-72 ..... Revision 3
3.4.3-73 ..... Revision 3
3.4.3-74 ..... Revision 3
3.4.3-75 ..... Revision 3
3.4.3-76 ..... Revision 3
3.4.3-77 ..... Revision 3
3.4.3-78 ..... Revision 3
3.4.3-79 ..... Revision 3
3.4.3-80 ..... Revision 3
3.4.3-81 ..... Revision 3
3.4.3-82 ..... Revision 3
3.4.3-83 ..... Revision 3
3.4.3-84 ..... Revision 3

List of Effective Pages (continued)

3.4.3-85 ..... Revision 3
3.4.3-86 ..... Revision 3
3.4.3-87 ..... Revision 3
3.4.3-88 ..... Revision 3
3.4.3-89 ..... Revision 3
3.4.3-90 ..... Revision 3
3.4.3-91 ..... Revision 3
3.4.3-92 ..... Revision 3
3.4.3-93 ..... Revision 3
3.4.3-94 ..... Revision 3
3.4.3-95 ..... Revision 3
3.4.3-96 ..... Revision 3
3.4.3-97 ..... Revision 3
3.4.3-98 ..... Revision 3
3.4.4-1 ..... Revision 0
3.4.4-2 ..... Revision 3
3.4.4-3 ..... Revision 3
3.4.4-4 ..... Revision 3
3.4.4-5 ..... Revision 3
3.4.4-6 ..... Revision 3
3.4.4-7 ..... Revision 3
3.4.4-8 ..... Revision 0
3.4.4-9 ..... Revision 3
3.4.4-10 ..... Revision 0
3.4.4-11 ..... Revision 3
3.4.4-12 ..... Revision 3
3.4.4-13 ..... Revision 3
3.4.4-14 ..... Revision 3
3.4.4-15 ..... Revision 3
3.4.4-16 ..... Revision 3
3.4.4-17 ..... Revision 3
3.4.4-18 ..... Revision 3
3.4.4-19 ..... Revision 8
3.4.4-20 ..... Revision 3
3.4.4-21 ..... Revision 0
3.4.4-22 ..... Revision 0
3.4.4-23 ..... Revision 0
3.4.4-24 ..... Revision 0
3.4.4-25 ..... Revision 0
3.4.4-26 ..... Revision 0
3.4.4-27 ..... Revision 0
3.4.4-28 ..... Revision 0
3.4.4-29 ..... Revision 0
3.4.4-30 ..... Revision 0
3.4.4-31 ..... Revision 0
3.4.4-32 ..... Revision 0
3.4.4-33 ..... Revision 0
3.4.4-34 ..... Revision 0
3.4.4-35 ..... Revision 0
3.4.4-36 ..... Revision 0
3.4.4-37 ..... Revision 0
3.4.4-38 ..... Revision 0
3.4.4-39 ..... Revision 3
3.4.4-40 ..... Revision 3
3.4.4-41 ..... Revision 3
3.4.4-42 ..... Revision 3
3.4.4-43 ..... Revision 3
3.4.4-44 ..... Revision 3
3.4.4-45 ..... Revision 3
3.4.4-46 ..... Revision 3
3.4.4-47 ..... Revision 3
3.4.4-48 ..... Revision 3
3.4.4-49 ..... Revision 0
3.4.4-50 ..... Revision 0
3.4.4-51 ..... Revision 0
3.4.4-52 ..... Revision 3
3.4.4-53 ..... Revision 3
3.4.4-54 ..... Revision 3
3.4.4-55 ..... Revision 3
3.4.4-56 ..... Revision 3

List of Effective Pages (continued)

3.4.4-57 ..... Revision 3
3.4.4-58 ..... Revision 3
3.4.4-59 ..... Revision 3
3.4.4-60 ..... Revision 3
3.4.4-61 ..... Revision 3
3.4.4-62 ..... Revision 3
3.4.4-63 ..... Revision 3
3.4.4-64 ..... Revision 3
3.4.4-65 ..... Revision 0
3.4.4-66 ..... Revision 3
3.4.4-67 ..... Revision 3
3.4.4-68 ..... Revision 3
3.4.4-69 ..... Revision 3
3.4.4-70 ..... Revision 0
3.4.4-71 ..... Revision 0
3.4.4-72 ..... Revision 0
3.4.4-73 ..... Revision 0
3.4.4-74 ..... Revision 0
3.4.4-75 ..... Revision 3
3.4.4-76 ..... Revision 3
3.4.4-77 ..... Revision 3
3.4.5-1 ..... Revision 3
3.5-1 ..... Revision 4
3.6-1 ..... Revision 8
3.6-2 ..... Revision 4
3.6-3 ..... Revision 8
3.6-4 ..... Revision 3
3.6-5 ..... Revision 3
3.6-6 .....Amendment 1
3.6-7 ..... Revision 3
3.6-8 ..... Revision 3
3.7-1 ..... Revision 3
3.7-2 ..... Revision 3
3.7-3 ..... Revision 8
3.7-4 ..... Revision 8
3.8-1 .....DCR(L) 790-FSAR-8A
3.8-2 .....DCR(L) 790-FSAR-8A
3.8-3 .....DCR(L) 790-FSAR-8A
3.8-4 .....DCR(L) 790-FSAR-8A
3.8-5 .....DCR(L) 790-FSAR-8A
3.8-6 .....DCR(L) 790-FSAR-8A
3.8-7 .....DCR(L) 790-FSAR-8A
3.8-8 .....DCR(L) 790-FSAR-8A
3.8-9 .....DCR(L) 790-FSAR-8A
3.8-10 .....DCR(L) 790-FSAR-8A
3.8-11 .....DCR(L) 790-FSAR-8A
3.8-12 .....DCR(L) 790-FSAR-8A
3.8-13 .....DCR(L) 790-FSAR-8A
3.8-14 .....DCR(L) 790-FSAR-8A
3.8-15 .....DCR(L) 790-FSAR-8A
3.8-16 .....DCR(L) 790-FSAR-8A

Appendix 3.A

3.A-i through 3.A-iv
UNITAD Revision 09A
3.A-1 UNITAD Revision 09A
3.A.1-1 through 3.A.1-4
UNITAD Revision 09A
3.A.2-1 through 3.A.2-3
UNITAD Revision 09A
3.A.3-1 through 3.A.3-3
UNITAD Revision 09A
3.A.4-1 through 3.A.4-53
UNITAD Revision 09A
3.A.5-1 through 3.A.5-55
UNITAD Revision 09A
3.A.6-1 UNITAD Revision 09A
3.A.7-1 UNITAD Revision 09A
3.A.8-1 UNITAD Revision 09A

List of Effective Pages (continued)

3.A.9-1 UNITAD Revision 09A

Chapter 4

4-i ..... UNITAD Revision 09A
4-ii ..... UNITAD Revision 09A
4-iii ..... UNITAD Revision 09A
4-iv ..... UNITAD Revision 09A
4-v ..... UNITAD Revision 09A
4-vi ..... UNITAD Revision 09A
4.1-1 ..... Revision 3
4.1-2 ..... Revision 8
4.1-3 ..... Revision 8
4.1-4 ..... Revision 0
4.1-5 ..... Revision 4
4.1-6 ..... Revision 7
4.1-7 ..... Revision 5
4.1-8 ..... Revision 5
4.2-1 ..... Revision 3
4.2-2 ..... Revision 3
4.2-3 ..... Revision 3
4.2-4 ..... Revision 0
4.2-5 ..... Revision 4
4.2-6 ..... Revision 0
4.2-7 ..... Revision 7
4.3-1 ..... Revision 3
4.3-2 ..... Revision 3
4.3-3 ..... Revision 3
4.4-1 ..... Revision 3
4.4.1-1 ..... Revision 3
4.4.1-2 ..... Revision 4
4.4.1-3 ..... Revision 7
4.4.1-4 ..... Revision 0
4.4.1-5 ..... Revision 0
4.4.1-6 ..... Revision 0
4.4.1-7 ..... Revision 0
4.4.1-8 ..... Amendment 2
4.4.1-9 ..... Revision 5
4.4.1-10 ..... Revision 3
4.4.1-11 ..... Revision 3
4.4.1-12 ..... Revision 3
4.4.1-13 ..... Revision 3
4.4.1-14 ..... Revision 3
4.4.1-15 ..... Revision 3
4.4.1-16 ..... Revision 3
4.4.1-17 ..... Revision 3
4.4.1-18 ..... Revision 3
4.4.1-19 ..... Revision 3
4.4.1-20 ..... Revision 3
4.4.1-21 ..... Revision 3
4.4.1-22 ..... Revision 3
4.4.1-23 ..... Revision 3
4.4.1-24 ..... Revision 3
4.4.1-25 ..... Revision 3
4.4.1-26 ..... Revision 3
4.4.1-27 ..... Revision 4
4.4.1-28 ..... Revision 5
4.4.1-29 ..... Revision 3
4.4.1-30 ..... Revision 4
4.4.1-31 ..... Revision 3
4.4.1-32 ..... Revision 3
4.4.1-33 ..... Revision 3
4.4.1-34 ..... Revision 3
4.4.1-35 ..... Revision 4
4.4.1-36 ..... Revision 3
4.4.1-37 ..... Revision 3
4.4.1-38 ..... Revision 7
4.4.1-39 ..... Revision 3
4.4.1-40 ..... Revision 3
4.4.1-41 ..... Revision 4
4.4.1-42 ..... Revision 4

List of Effective Pages (continued)

4.4.1-43 ..... Revision 4
4.4.1-44 ..... Revision 3
4.4.1-45 ..... Revision 3
4.4.1-46 ..... Revision 3
4.4.1-47 ..... Revision 3
4.4.1-48 ..... Revision 3
4.4.1-49 ..... Revision 3
4.4.2-1 ..... Revision 0
4.4.3-1 ..... Revision 8
4.4.3-2 ..... Revision 4
4.4.3-3 ..... Revision 4
4.4.3-4 ..... Revision 4
4.4.3-5 ..... Revision 3
4.4.3-6 ..... Revision 3
4.4.3-7 ..... Revision 3
4.4.3-8 ..... Revision 3
4.4.3-9 ..... Revision 3
4.4.3-10 ..... Revision 3
4.4.3-11 ..... Revision 3
4.4.3-12 ..... Revision 3
4.4.3-13 ..... Revision 3
4.4.3-14 ..... Revision 5
4.4.3-15 ..... Revision 5
4.4.3-16 ..... Revision 3
4.4.3-17 ..... Revision 4
4.4.3-18 ..... Revision 3
4.4.3-19 ..... Revision 3
4.4.3-20 ..... Revision 3
4.4.3-21 ..... Revision 3
4.4.3-22 ..... Revision 3
4.4.4-1 ..... Revision 0
4.4.5-1 ..... Revision 8
4.4.5-2 ..... Revision 5
4.4.5-3 ..... Revision 5
4.4.5-4 ..... Revision 8
4.4.5-5 ..... Revision 3
4.4.6-1 ..... Revision 0
4.4.7-1 ..... Revision 3
4.5-1 ..... Revision 5
4.5-2 ..... Revision 4
4.5-3 ..... Revision 4
4.5-4 ..... Amendment 2
4.5-5 ..... Revision 3
4.5-6 ..... Revision 4
4.5-7 ..... Revision 3
4.5-8 ..... Revision 8
4.5-9 ..... Revision 3
4.5-10 ..... Revision 3
4.5-11 ..... Amendment 2
4.5-12 ..... Amendment 2
4.5-13 ..... Amendment 2
4.5-14 ..... Amendment 2
4.5-15 ..... Amendment 2
4.5-16 ..... Amendment 2
4.5-17 ..... Revision 7
4.5-18 ..... Revision 3
4.5-19 ..... Revision 3
4.6-1 ..... Revision 3
4.6-2 ..... Revision 3
4.6-3 ..... Revision 0
4.6-4 ..... Revision 8

Appendix 4.A

4.A-i through 4.A-iii
UNITAD Revision 09A
4.A-1 UNITAD Revision 09A
4.A.1-1 & 4.A.1-2
UNITAD Revision 09A

List of Effective Pages (continued)

4.A.2-1 UNITAD Revision 09A
4.A.3-1 UNITAD Revision 09A
4.A.4-1 through 4.A.4-44
UNITAD Revision 09A
4.A.5-1 UNITAD Revision 09A

Chapter 5

5-i ..... UNITAD Revision 09A
5-ii ..... UNITAD Revision 09A
5-iii ..... UNITAD Revision 09A
5-iv ..... UNITAD Revision 09A
5-v ..... UNITAD Revision 09A
5-vi ..... UNITAD Revision 09A
5-vii ..... UNITAD Revision 09A
5-viii ..... UNITAD Revision 09A
5-ix ..... UNITAD Revision 09A
5.1-1 ..... Revision 3
5.1-2 ..... Revision 7
5.1-3 ..... Revision 7
5.1-4 ..... Revision 7
5.1-5 ..... Revision 7
5.1-6 ..... Revision 7
5.1-7 ..... Revision 7
5.1-8 ..... Revision 7
5.1-9 ..... Revision 7
5.1-10 ..... Revision 7
5.1-11 ..... Revision 7
5.1-12 ..... Revision 7
5.2-1 ..... Revision 8
5.2-2 ..... Revision 8
5.2-3 ..... Revision 8
5.2-4 ..... Revision 8
5.2-5 ..... Revision 8
5.2-6 ..... Revision 8
5.2-7 ..... Revision 8
5.2-8 ..... Revision 8
5.2-9 ..... Revision 8
5.2-10 ..... Revision 8
5.2-11 ..... Revision 8
5.2-12 ..... Revision 8
5.2-13 ..... Revision 8
5.2-14 ..... Revision 8
5.2-15 ..... Revision 8
5.2-16 ..... Revision 8
5.2-17 ..... Revision 8
5.2-18 ..... Revision 8
5.2-19 ..... Revision 8
5.2-20 ..... Revision 8
5.2-21 ..... Revision 8
5.2-22 ..... Revision 8
5.2-23 ..... Revision 8
5.2-24 ..... Revision 8
5.2-25 ..... Revision 8
5.2-26 ..... Revision 8
5.2-27 ..... Revision 8
5.2-28 ..... Revision 8
5.2-29 ..... Revision 8
5.2-30 ..... Revision 8
5.2-31 ..... Revision 8
5.2-32 ..... Revision 8
5.2-33 ..... Revision 8
5.2-34 ..... Revision 8
5.2-35 ..... Revision 8
5.2-36 ..... Revision 8
5.3-1 ..... Revision 3
5.3-2 ..... Revision 3
5.3-3 ..... Revision 3
5.3-4 ..... Revision 3
5.3-5 ..... Revision 3
5.3-6 ..... Revision 3

List of Effective Pages (continued)

5.3-7 ..... Revision 3
5.3-8 ..... Revision 3
5.3-9 ..... Revision 3
5.3-10 ..... Revision 3
5.3-11 ..... Revision 4
5.3-12 ..... Revision 4
5.3-13 ..... Revision 3
5.3-14 ..... Revision 3
5.3-15 ..... Revision 3
5.3-16 ..... Revision 3
5.3-17 ..... Revision 3
5.3-18 ..... Revision 3
5.3-19 ..... Revision 3
5.3-20 ..... Revision 3
5.3-21 ..... Revision 3
5.3-22 ..... Revision 4
5.3-23 ..... Revision 4
5.3-24 ..... Revision 3
5.3-25 ..... Revision 4
5.3-26 ..... Revision 4
5.3-27 ..... Revision 3
5.3-28 ..... Revision 3
5.3-29 ..... Revision 3
5.3-30 ..... Revision 3
5.3-31 ..... Revision 3
5.3-32 ..... Revision 3
5.4-1 ..... Revision 3
5.4-2 ..... Revision 3
5.4-3 ..... Revision 3
5.4-4 ..... Revision 3
5.4-5 ..... Revision 7
5.4-6 ..... Revision 3
5.4-7 ..... Revision 3
5.4-8 ..... Revision 3
5.4-9 ..... Revision 3
5.4-10 ..... Revision 3
5.4-11 ..... Revision 3
5.4-12 ..... Revision 3
5.4-13 ..... Revision 3
5.4-14 ..... Revision 3
5.4-15 ..... Revision 3
5.4-16 ..... Revision 3
5.4-17 ..... Revision 3
5.4-18 ..... Revision 3
5.4-19 ..... Revision 3
5.4-20 ..... Revision 3
5.4-21 ..... Revision 3
5.4-22 ..... Revision 3
5.4-23 ..... Revision 3
5.4-24 ..... Revision 3
5.4-25 ..... Revision 3
5.4-26 ..... Revision 3
5.4-27 ..... Revision 3
5.5-1 ..... Revision 8
5.5-2 ..... Revision 3
5.5-3 ..... Revision 7
5.5-4 ..... Revision 7
5.5-5 ..... Revision 3
5.5-6 ..... Revision 3
5.5-7 ..... Revision 3
5.5-8 ..... Revision 8
5.5-9 ..... Revision 8
5.5-10 ..... Revision 8
5.6-1 ..... Amendment 1
5.6.1-1 ..... Revision 4
5.6.1-2 ..... Amendment 1
5.6.1-3 ..... Revision 4
5.6.1-4 ..... Amendment 1
5.6.1-5 ..... Revision 4
5.6.1-6 ..... Revision 3

List of Effective Pages (continued)

5.6.1-7 ..... Revision 3
5.6.1-8 ..... Revision 3
5.6.1-9 ..... Amendment 1
5.6.1-10 ..... Amendment 1
5.6.1-11 ..... Revision 8
5.6.1-12 ..... Revision 8
5.6.1-13 ..... Amendment 2
5.6.1-14 ..... Amendment 2
5.6.1-15 ..... Amendment 2
5.6.1-16 ..... Amendment 2
5.6.1-17 ..... Amendment 2
5.6.1-18 ..... Amendment 2
5.6.1-19 ..... Amendment 2
5.6.1-20 ..... Amendment 2
5.6.1-21 ..... Amendment 2
5.6.1-22 ..... Amendment 2
5.6.1-23 ..... Revision 3
5.6.1-24 ..... Revision 3
5.6.1-25 ..... Amendment 2
5.6.1-26 ..... Revision 3
5.6.1-27 ..... Revision 3
5.6.1-28 ..... Amendment 2
5.6.1-29 ..... Amendment 2
5.6.1-30 ..... Amendment 2
5.6.1-31 ..... Amendment 2
5.6.1-32 ..... Amendment 2
5.6.1-33 ..... Amendment 2
5.6.1-34 ..... Amendment 2
5.7-1 ..... Revision 0
5.7-2 ..... Revision 0
5.7-3 ..... Revision 8

Appendix 5.A

5.A-i through 5.A-v
UNITAD Revision 09A
5.A-1 UNITAD Revision 09A
5.A.1-1 through 5.A.1-7
UNITAD Revision 09A
5.A.2-1 through 5.A.2-10
UNITAD Revision 09A
5.A.3-1 through 5.A.3-5
UNITAD Revision 09A
5.A.4-1 through 5.A.4-4
UNITAD Revision 09A
5.A.5-1 through 5.A.5-16
UNITAD Revision 09A
5.A.6-1 through 5.A.6-12
UNITAD Revision 09A
5.A.7-1 through 5.A.7-82
UNITAD Revision 09A
5.A.8-1 through 5.A.8-3
UNITAD Revision 09A

Chapter 6

6-i ..... UNITAD Revision 09A
6-ii ..... UNITAD Revision 09A
6-iii ..... UNITAD Revision 09A
6-iv ..... UNITAD Revision 09A
6-v ..... UNITAD Revision 09A
6-vi ..... UNITAD Revision 09A
6-vii ..... UNITAD Revision 09A
6.1-1 ..... Revision 8

List of Effective Pages (continued)

6.1-2 ..... Revision 8
6.1-3 ..... Revision 3
6.1-4 ..... Revision 3
6.1-5 ..... Revision 3
6.1-6 ..... Revision 3
6.2-1 ..... Revision 5
6.2-2 ..... Revision 3
6.2-3 ..... Revision 3
6.3-1 ..... Revision 3
6.3-2 ..... Revision 3
6.3-3 ..... Revision 5
6.3-4 ..... Revision 3
6.3-5 ..... Revision 3
6.3-6 ..... Revision 3
6.3-7 ..... Revision 7
6.3-8 ..... Revision 4
6.3-9 ..... Revision 3
6.3-10 ..... Revision 3
6.3-11 ..... Revision 3
6.3-12 ..... Revision 3
6.3-13 ..... Revision 3
6.3-14 ..... Revision 3
6.3-15 ..... Revision 3
6.3-16 ..... Revision 3
6.3-17 ..... Revision 3
6.3-18 ..... Revision 3
6.4-1 ..... Revision 4
6.4-2 ..... Revision 3
6.4-3 ..... Revision 3
6.4-4 ..... Revision 3
6.4-5 ..... Revision 3
6.4-6 ..... Revision 3
6.4-7 ..... Revision 3
6.4-8 ..... Revision 3
6.4-9 ..... Revision 3
6.4-10 ..... Revision 3
6.4-11 ..... Revision 3
6.4-12 ..... Revision 3
6.4-13 ..... Revision 3
6.4-14 ..... Revision 3
6.4-15 ..... Revision 3
6.4-16 ..... Revision 3
6.4-17 ..... Revision 0
6.4-18 ..... Revision 3
6.4-19 ..... Revision 3
6.4-20 ..... Revision 3
6.4-21 ..... Revision 3
6.4-22 ..... Revision 3
6.4-23 ..... Revision 3
6.4-24 ..... Revision 3
6.4-25 ..... Revision 3
6.4-26 ..... Revision 3
6.4-27 ..... Revision 3
6.4-28 ..... Revision 3
6.4-29 ..... Revision 3
6.4-30 ..... Revision 3
6.4-31 ..... Revision 3
6.4-32 ..... Revision 3
6.4-33 ..... Revision 3
6.4-34 ..... Revision 3
6.4-35 ..... Revision 3
6.4-36 ..... Revision 3
6.4-37 ..... Revision 3
6.4-38 ..... Revision 3
6.4-39 ..... Revision 3
6.4-40 ..... Revision 3
6.5-1 ..... Revision 3
6.5-2 ..... Revision 3
6.5-3 ..... Revision 3
6.5-4 ..... Revision 3

List of Effective Pages (continued)

6.5-5 ..... Revision 3
6.5-6 ..... Revision 3
6.5-7 ..... Revision 3
6.5-8 ..... Revision 3
6.5-9 ..... Revision 3
6.5-10 ..... Revision 3
6.5-11 ..... Revision 3
6.5-12 ..... Revision 3
6.5-13 ..... Revision 3
6.5-14 ..... Revision 3
6.5-15 ..... Revision 3
6.5-16 ..... Revision 3
6.5-17 ..... Revision 3
6.5-18 ..... Revision 3
6.5-19 ..... Revision 3
6.5-20 ..... Revision 3
6.5-21 ..... Revision 3
6.5-22 ..... Revision 3
6.5-23 ..... Revision 3
6.5-24 ..... Revision 3
6.5-25 ..... Revision 3
6.5-26 ..... Revision 3
6.5-27 ..... Revision 3
6.5-28 ..... Revision 3
6.5-29 ..... Revision 3
6.5-30 ..... Revision 3
6.5-31 ..... Revision 3
6.5-32 ..... Revision 3
6.5-33 ..... Revision 3
6.5-34 ..... Revision 3
6.5-35 ..... Revision 3
6.5-36 ..... Revision 3
6.5-37 ..... Revision 3
6.5-38 ..... Revision 3
6.5-39 ..... Revision 3
6.5-40 ..... Revision 3
6.5-41 ..... Revision 3
6.5-42 ..... Revision 3
6.5-43 ..... Revision 3
6.5-44 ..... Revision 3
6.5-45 ..... Revision 3
6.5-46 ..... Revision 3
6.5-47 ..... Revision 3
6.5-48 ..... Revision 3
6.5-49 ..... Revision 3
6.6-1 ..... Amendment 2
6.6.1-1 ..... Revision 8
6.6.1-2 ..... Revision 8
6.6.1-3 ..... Amendment 2
6.6.1-4 ..... Revision 4
6.6.1-5 ..... Revision 8
6.6.1-6 ..... Revision 8
6.6.1-7 ..... Revision 8
6.6.1-8 ..... Revision 3
6.6.1-9 ..... Amendment 2
6.6.1-10 ..... Amendment 2
6.6.1-11 ..... Revision 8
6.6.1-12 ..... Amendment 2
6.6.1-13 ..... Amendment 2
6.6.1-14 ..... Amendment 2
6.6.1-15 ..... Revision 4
6.6.1-16 ..... Amendment 2
6.6.1-17 ..... Amendment 2
6.6.1-18 ..... Amendment 2
6.6.1-19 ..... Amendment 2
6.6.1-20 ..... Amendment 2
6.6.1-21 ..... Amendment 2
6.6.1-22 ..... Revision 3
6.6.1-23 ..... Amendment 2
6.6.1-24 ..... Amendment 2

List of Effective Pages (continued)

6.7-1 ..... Revision 0
6.7-2 ..... Revision 5
6.8-1 ..... Revision 7
6.8-2 ..... Revision 0
6.8-3 ..... Revision 0
6.8-4 ..... Revision 0
6.8-5 ..... Revision 0
6.8-6 ..... Revision 0
6.8-7 ..... Revision 0
6.8-8 ..... Revision 0
6.8-9 ..... Revision 0
6.8-10 ..... Revision 0
6.8-11 ..... Revision 0
6.8-12 ..... Revision 0
6.8-13 ..... Revision 0
6.8-14 ..... Revision 0
6.8-15 ..... Revision 0
6.8-16 ..... Revision 0
6.8-17 ..... Revision 0
6.8-18 ..... Revision 0
6.8-19 ..... Revision 0
6.8-20 ..... Revision 0
6.8-21 ..... Revision 0
6.8-22 ..... Revision 0
6.8-23 ..... Revision 0
6.8-24 ..... Revision 0
6.8-25 ..... Revision 0
6.8-26 ..... Revision 0
6.8-27 ..... Revision 0
6.8-28 ..... Revision 0
6.8-29 ..... Revision 0
6.8-30 ..... Revision 0
6.8-31 ..... Revision 0
6.8-32 ..... Revision 0
6.8-33 ..... Revision 0
6.8-34 ..... Revision 0
6.8-35 ..... Revision 0
6.8-36 ..... Revision 0
6.8-37 ..... Revision 0
6.8-38 ..... Revision 0
6.8-39 ..... Revision 0
6.8-40 ..... Revision 0
6.8-41 ..... Revision 0
6.8-42 ..... Revision 0
6.8-43 ..... Revision 0
6.8-44 ..... Revision 0
6.8-45 ..... Revision 0
6.8-46 ..... Revision 0
6.8-47 ..... Revision 0
6.8-48 ..... Revision 0
6.8-49 ..... Revision 0
6.8-50 ..... Revision 0
6.8-51 ..... Revision 0
6.8-52 ..... Revision 3
6.8-53 ..... Revision 3
6.8-54 ..... Revision 3
6.8-55 ..... Revision 3
6.8-56 ..... Revision 3
6.8-57 ..... Revision 3
6.8-58 ..... Revision 3
6.8-59 ..... Revision 3
6.8-60 ..... Revision 3
6.8-61 ..... Revision 3
6.8-62 ..... Revision 3
6.8-63 ..... Revision 3
6.8-64 ..... Revision 3
6.8-65 ..... Revision 3
6.8-66 ..... Revision 3

List of Effective Pages (continued)

Appendix 6.A

6.A-i through 6.A-iii
UNITAD Revision 09A
6.A-1 UNITAD Revision 09A
6.A.1-1 through 6.A.1-4
UNITAD Revision 09A
6.A.2-1 & 6.A.2-2
UNITAD Revision 09A
6.A.3-1 through 6.A.3-10
UNITAD Revision 09A
6.A.4-1 through 6.A.4-19
UNITAD Revision 09A
6.A.5-1 through 6.A.5-36
UNITAD Revision 09A
6.A.6-1 UNITAD Revision 09A
6.A.7-1 through 6.A.7-16
UNITAD Revision 09A

Chapter 7

7-i ..... UNITAD Revision 09A
7-ii ..... UNITAD Revision 09A
7.1-1 ..... Revision 8
7.1-2 ..... Revision 8
7.1-3 ..... Revision 4
7.1-4 ..... Revision 8
7.1-5 ..... Revision 4
7.1-6 ..... Revision 8
7.1-7 ..... Revision 4
7.1-8 ..... Revision 4
7.1-9 ..... Revision 4
7.2-1 ..... Revision 3
7.2-2 ..... Revision 8
7.3-1 ..... Revision 8
7.4-1 ..... Revision 8
7.5-1 ..... Revision 4

Appendix 7.A

7.A-i & 7.A-ii
UNITAD Revision 09A
7.A-1 UNITAD Revision 09A
7.A.1-1 through 7.A.1-6
UNITAD Revision 09A
7.A.2-1 & 7.A.2-2
UNITAD Revision 09A
7.A.3-1 UNITAD Revision 09A
7.A.4-1 UNITAD Revision 09A

Chapter 8

8-i ..... UNITAD Revision 09A
8-ii ..... UNITAD Revision 09A
8-1 ..... Revision 5
8-2 ..... Revision 5
8.1-1 ..... Revision 8
8.1.1-1 ..... Revision 8
8.1.1-2 ..... Revision 5
8.1.1-3 ..... Revision 4
8.1.1-4 ..... Revision 8
8.1.1-5 ..... Revision 8
8.1.1-6 ..... Revision 8
8.1.1-7 ..... Revision 8
8.1.1-8 ..... Revision 5
8.1.1-9 ..... Revision 5
8.1.1-10 ..... Revision 5
8.1.1-11 ..... Revision 6
8.1.2-1 ..... Revision 8
8.1.2-2 ..... Revision 8
8.1.3-1 ..... Revision 8
8.1.3-2 ..... Revision 8

List of Effective Pages (continued)

8.2-1 ..... Revision 6
8.2-2 ..... Revision 5
8.3-1 ..... Revision 4
8.3-2 ..... Revision 3
8.3-3 ..... Revision 3
8.3-4 ..... Revision 3
8.4-1 ..... Revision 0

Appendix 8.A

8.A-i & 8.A-ii
UNITAD Revision 09A
8.A-1 & 8.A-2
UNITAD Revision 09A
8.A.1-1 through 8.A.1-8
UNITAD Revision 09A
8.A.2-1 through 8.A.2-3
UNITAD Revision 09A
8.A.3-1 through 8.A.3-6
UNITAD Revision 09A
8.A.4-1 through 8.A.4-4
UNITAD Revision 09A
8.A.5-1 UNITAD Revision 09A

Chapter 9

9-i ..... UNITAD Revision 09A
9.1-1 ..... Revision 4
9.1-2 ..... Revision 8
9.1-3 ..... Revision 4
9.1-4 ..... Revision 5
9.1-5 ..... Revision 4
9.1-6 ..... Revision 4
9.1-7 ..... Revision 8
9.1-8 ..... Revision 7
9.1-9 ..... Revision 4
9.1-10 ..... Revision 6
9.2-1 ..... Revision 7
9.2-2 .....DCR(L) 790-FSAR-8A
9.2-3 ..... Revision 7
9.3-1 ..... Revision 8
9.3-2 ..... Revision 5

Appendix 9.A

9.A-i & 9.A-ii
UNITAD Revision 09A
9.A-1 UNITAD Revision 09A
9.A.1-1 through 9.A.1-16
UNITAD Revision 09A
9.A.2-1 through 9.A.2-3
UNITAD Revision 09A
9.A.3-1 & 9.A.3-2
UNITAD Revision 09A

Chapter 10

10-i ..... UNITAD Revision 09A
10-ii ..... UNITAD Revision 09A
10.1-1 ..... Revision 3
10.1-2 ..... Revision 6
10.2-1 ..... Revision 3
10.2-2 ..... Revision 3
10.3-1 ..... Revision 3
10.3-2 ..... Revision 6
10.3-3 ..... Revision 6
10.3-4 ..... Revision 0
10.3-5 ..... Revision 3
10.3-6 ..... Revision 3
10.3-7 ..... Revision 0
10.3-8 ..... Revision 3
10.3-9 ..... Revision 3

List of Effective Pages (continued)

10.4-1 ..... Revision 3
10.4-2 ..... Revision 3
10.4-3 ..... Revision 3
10.4-4 ..... Revision 3
10.4-5 ..... Revision 3
10.5-1 ..... Amendment 1
10.6-1 ..... Revision 0

Appendix 10.A

10.A-i UNITAD Revision 09A
10.A.1-1 & 10.A.1-2
UNITAD Revision 09A
10.A.2-1 UNITAD Revision 09A
10.A.3-1 through 10.A.3-5
UNITAD Revision 09A
10.A.4-1 UNITAD Revision 09A
10.A.5-1 UNITAD Revision 09A

Chapter 11

11-i ..... UNITAD Revision 09A
11-ii ..... UNITAD Revision 09A
11-iii ..... UNITAD Revision 09A
11-iv ..... UNITAD Revision 09A
11-v ..... UNITAD Revision 09A
11-vi ..... UNITAD Revision 09A
11-vii ..... UNITAD Revision 09A
11-viii ..... UNITAD Revision 09A
11-ix ..... UNITAD Revision 09A
11-x ..... UNITAD Revision 09A
11-1 ..... Revision 0
11.1.1-1 ..... Revision 6
11.1.1-2 ..... Revision 3
11.1.1-3 ..... Revision 0
11.1.1-4 ..... Revision 0
11.1.1-5 ..... Revision 0
11.1.1-6 ..... Revision 0
11.1.2-1 ..... Revision 6
11.1.2-2 ..... Revision 0
11.1.2-3 ..... Revision 3
11.1.3-1 ..... Revision 3
11.1.3-2 ..... Revision 3
11.1.3-3 ..... Revision 3
11.1.3-4 ..... Revision 3
11.1.3-5 ..... Revision 3
11.1.3-6 ..... Revision 3
11.1.3-7 ..... Revision 3
11.1.3-8 ..... Revision 3
11.1.3-9 ..... Revision 3
11.1.3-10 ..... Revision 3
11.1.3-11 ..... Revision 3
11.1.3-12 ..... Revision 3
11.1.3-13 ..... Revision 3
11.1.3-14 ..... Revision 3
11.1.3-15 ..... Revision 3
11.1.3-16 ..... Revision 3
11.1.4-1 ..... Revision 6
11.1.4-2 ..... Revision 6
11.1.5-1 ..... Revision 0
11.1.5-2 ..... Revision 0
11.1.6-1 ..... Amendment 1
11.2-1 ..... Amendment 1
11.2.1-1 ..... Revision 3
11.2.1-2 ..... Revision 3
11.2.1-3 ..... Revision 3
11.2.1-4 ..... Revision 3
11.2.1-5 ..... Revision 3
11.2.1-6 ..... Revision 3
11.2.1-7 ..... Revision 3
11.2.2-1 ..... Revision 8

List of Effective Pages (continued)

11.2.3-1 ..... Revision 3
11.2.3-2 ..... Revision 0
11.2.4-1 ..... Revision 3
11.2.4-2 ..... Revision 3
11.2.4-3 ..... Revision 3
11.2.4-4 ..... Revision 3
11.2.4-5 ..... Revision 3
11.2.4-6 ..... Revision 3
11.2.4-7 ..... Revision 3
11.2.4-8 ..... Revision 3
11.2.4-9 ..... Revision 3
11.2.4-10 ..... Revision 3
11.2.4-11 ..... Revision 3
11.2.4-12 ..... Revision 6
11.2.4-13 ..... Revision 0
11.2.4-14 ..... Revision 0
11.2.4-15 ..... Revision 0
11.2.4-16 ..... Revision 0
11.2.4-17 ..... Revision 0
11.2.4-18 ..... Revision 0
11.2.4-19 ..... Revision 0
11.2.4-20 ..... Revision 0
11.2.4-21 ..... Revision 0
11.2.4-22 ..... Revision 3
11.2.4-23 ..... Revision 3
11.2.4-24 ..... Revision 3
11.2.4-25 ..... Revision 7
11.2.4-26 ..... Revision 3
11.2.4-27 ..... Revision 3
11.2.5-1 ..... Revision 0
11.2.6-1 ..... Revision 3
11.2.6-2 ..... Revision 3
11.2.6-3 ..... Revision 6
11.2.6-4 ..... Revision 0
11.2.6-5 ..... Revision 3
11.2.7-1 ..... Revision 6
11.2.7-2 ..... Revision 3
11.2.8-1 ..... Revision 5
11.2.8-2 ..... Revision 0
11.2.8-3 ..... Revision 3
11.2.8-4 ..... Revision 3
11.2.8-5 ..... Revision 3
11.2.8-6 ..... Revision 5
11.2.8-7 ..... Revision 3
11.2.8-8 ..... Revision 5
11.2.8-9 ..... Revision 5
11.2.8.-10 ..... Revision 5
11.2.8-11 ..... Revision 6
11.2.8-12 ..... Revision 6
11.2.9-1 ..... Revision 0
11.2.9-2 ..... Revision 3
11.2.9-3 ..... Revision 3
11.2.9-4 ..... Revision 3
11.2.9-5 ..... Revision 6
11.2.9-6 ..... Revision 3
11.2.9-7 ..... Revision 3
11.2.10-1 ..... Revision 0
11.2.10-2 ..... Revision 0
11.2.10-3 ..... Revision 0
11.2.10-4 ..... Revision 6
11.2.11-1 ..... Revision 0
11.2.11-2 ..... Revision 3
11.2.11-3 ..... Revision 3
11.2.11-4 ..... Revision 3
11.2.11-5 ..... Revision 0
11.2.11-6 ..... Revision 0
11.2.11-7 ..... Revision 0
11.2.11-8 ..... Revision 3
11.2.11-9 ..... Revision 3
11.2.11-10 ..... Revision 3

List of Effective Pages (continued)

11.2.11-11 ..... Revision 3
11.2.11-12 ..... Revision 0
11.2.11-13 ..... Revision 6
11.2.11-14 ..... Revision 3
11.2.12-1 ..... Revision 0
11.2.12-2 ..... Revision 7
11.2.12-3 ..... Revision 3
11.2.12-4 ..... Revision 3
11.2.12-5 ..... Revision 3
11.2.12-6 ..... Revision 3
11.2.12-7 ..... Revision 3
11.2.12-8 ..... Revision 3
11.2.12-9 ..... Revision 3
11.2.12-10 ..... Revision 3
11.2.12-11 ..... Revision 0
11.2.12-12 ..... Revision 0
11.2.12-13 ..... Revision 3
11.2.12-14 ..... Revision 3
11.2.12-15 ..... Revision 3
11.2.12-16 ..... Revision 0
11.2.12-17 ..... Revision 0
11.2.12-18 ..... Revision 0
11.2.12-19 ..... Revision 3
11.2.12-20 ..... Revision 3
11.2.12-21 ..... Revision 0
11.2.12-22 ..... Revision 3
11.2.12-23 ..... Revision 0
11.2.12-24 ..... Revision 3
11.2.12-25 ..... Revision 3
11.2.12-26 ..... Revision 3
11.2.12-27 ..... Revision 3
11.2.12-28 ..... Revision 3
11.2.12-29 ..... Revision 3
11.2.12-30 ..... Revision 3
11.2.12-31 ..... Revision 3
11.2.12-32 ..... Revision 3
11.2.12-33 ..... Revision 3
11.2.12-34 ..... Revision 3
11.2.12-35 ..... Revision 3
11.2.12-36 ..... Revision 3
11.2.12-37 ..... Revision 3
11.2.12-38 ..... Revision 3
11.2.12-39 ..... Revision 3
11.2.12-40 ..... Revision 3
11.2.12-41 ..... Revision 3
11.2.12-42 ..... Revision 3
11.2.12-43 ..... Revision 3
11.2.12-44 ..... Revision 3
11.2.12-45 ..... Revision 3
11.2.12-46 ..... Revision 3
11.2.12-47 ..... Revision 3
11.2.12-48 ..... Revision 3
11.2.12-49 ..... Revision 3
11.2.12-50 ..... Revision 3
11.2.12-51 ..... Revision 3
11.2.12-52 ..... Revision 3
11.2.12-53 ..... Revision 3
11.2.12-54 ..... Revision 3
11.2.12-55 ..... Revision 3
11.2.12-56 ..... Revision 3
11.2.12-57 ..... Revision 3
11.2.12-58 ..... Revision 3
11.2.12-59 ..... Revision 3
11.2.12-60 ..... Revision 3
11.2.12-61 ..... Revision 3
11.2.12-62 ..... Revision 3
11.2.12-63 ..... Revision 3
11.2.12-64 ..... Revision 3
11.2.12-65 ..... Revision 3
11.2.12-66 ..... Revision 3

List of Effective Pages (continued)

11.2.12-67 ..... Revision 3
11.2.12-68 ..... Revision 3
11.2.12-69 ..... Revision 3
11.2.12-70 ..... Revision 3
11.2.12-71 ..... Revision 6
11.2.13-1 ..... Revision 6
11.2.13-2 ..... Revision 6
11.2.13-3 ..... Revision 0
11.2.14-1 ..... Revision 8
11.2.14-2 ..... Revision 3
11.2.15-1 ..... Revision 3
11.2.15-2 ..... Revision 3
11.2.15-3 ..... Amendment 1
11.2.15-4 ..... Amendment 2
11.2.15-5 ..... Revision 8
11.2.15-6 ..... Revision 8
11.2.15-7 ..... Amendment 1
11.2.15-8 ..... Amendment 1
11.2.15-9 ..... Amendment 1
11.2.15-10 ..... Amendment 1
11.2.15-11 ..... Amendment 1
11.2.15-12 ..... Amendment 1
11.2.15-13 ..... Amendment 1
11.2.15-14 ..... Revision 3
11.2.15-15 ..... Revision 3
11.2.15-16 ..... Revision 3
11.2.15-17 ..... Revision 3
11.2.15-18 ..... Amendment 1
11.2.15-19 ..... Amendment 1
11.2.15-20 ..... Amendment 1
11.2.15-21 ..... Amendment 1
11.2.15-22 ..... Amendment 1
11.2.15-23 ..... Amendment 2
11.2.15-24 ..... Amendment 2
11.2.15-25 ..... Revision 4
11.2.15-26 ..... Amendment 2
11.2.15-27 ..... Amendment 1
11.2.15-28 ..... Amendment 2
11.2.15-29 ..... Revision 4
11.2.15-30 ..... Revision 3
11.2.15-31 ..... Revision 3
11.2.15-32 ..... Revision 4
11.2.15-33 ..... Amendment 2
11.2.15-34 ..... Amendment 2
11.2.15-35 ..... Amendment 2
11.2.16-1 ..... Revision 8
11.2.16-2 ..... Revision 8
11.2.16-3 ..... Revision 8
11.2.16-4 ..... Revision 8
11.2.16-5 ..... Revision 8
11.2.16-6 ..... Revision 8
11.2.16-7 ..... Revision 8
11.2.16-8 ..... Revision 8
11.2.16-9 ..... Revision 8
11.2.16-10 ..... Revision 8
11.3-1 ..... Revision 3
11.3-2 ..... Revision 0
11.3-3 ..... Revision 0
11.3-4 ..... Revision 3
11.3-5 ..... Revision 8

Appendix 11.A

11.A-i through 11.A-iv
UNITAD Revision 09A
11.A-1 UNITAD Revision 09A
11.A.1-1 through 11.A.1-17
UNITAD Revision 09A
11.A.2-1 through 11.A.2-82
UNITAD Revision 09A

List of Effective Pages (continued)

11.A.3-1 UNITAD Revision 09A

Chapter 12

12-i ..... UNITAD Revision 09A
12-ii ..... UNITAD Revision 09A
12-1 ..... UNITAD Revision 09A
12-2 ..... UNITAD Revision 09A
12-3 ..... UNITAD Revision 09A
12.A-1 ..... UNITAD Revision 09A
12.A-2 ..... UNITAD Revision 09A
12.A-3 ..... UNITAD Revision 09A
12.A-4 ..... UNITAD Revision 09A
12.A.1-1 ..... UNITAD Revision 09A
12.A.1-2 ..... UNITAD Revision 09A
12.A.1-3 ..... UNITAD Revision 09A
12.A.1-4 ..... UNITAD Revision 09A
12.A.1-5 ..... UNITAD Revision 09A
12.A.1-6 ..... UNITAD Revision 09A
12.A.1-7 ..... UNITAD Revision 09A
12.A.1-8 ..... UNITAD Revision 09A
12.A.1-9 ..... UNITAD Revision 09A
12.A.1-10 ..... UNITAD Revision 09A
12.A.1-11 ..... UNITAD Revision 09A
12.A.1-12 ..... UNITAD Revision 09A
12.A.1-13 ..... UNITAD Revision 09A
12.A.1-14 ..... UNITAD Revision 09A
12.A.1-15 ..... UNITAD Revision 09A
12.A.1-16 ..... UNITAD Revision 09A
12.A.1-17 ..... UNITAD Revision 09A
12.A.1-18 ..... UNITAD Revision 09A
12.A.1-19 ..... UNITAD Revision 09A
12.A.2-1 ..... UNITAD Revision 09A
12.A.3-1 ..... UNITAD Revision 09A
12.A.3-2 ..... UNITAD Revision 09A
12.A.3-3 ..... UNITAD Revision 09A
12.A.3-4 ..... UNITAD Revision 09A
12.A.3-5 ..... UNITAD Revision 09A
12.A.3-6 ..... UNITAD Revision 09A
12.A.3-7 ..... UNITAD Revision 09A
12.A.3-8 ..... UNITAD Revision 09A
12.A.3-9 ..... UNITAD Revision 09A
12.A.3-10 ..... UNITAD Revision 09A
12.A.3-11 ..... UNITAD Revision 09A
12.A.3-12 ..... UNITAD Revision 09A
12.A.3-13 ..... UNITAD Revision 09A
12.A.3-14 ..... UNITAD Revision 09A
12.A.3-15 ..... UNITAD Revision 09A
12.A.3-16 ..... UNITAD Revision 09A
12.A.3-17 ..... UNITAD Revision 09A
12.A.3-18 ..... UNITAD Revision 09A
12.A.3-19 ..... UNITAD Revision 09A
12.A.3-20 ..... UNITAD Revision 09A
12.A.3-21 ..... UNITAD Revision 09A
12.A.3-22 ..... UNITAD Revision 09A
12.A.4-1 ..... UNITAD Revision 09A
12.A.5-1 ..... UNITAD Revision 09A
12.A.5-2 ..... UNITAD Revision 09A
12.A.5-3 ..... UNITAD Revision 09A
12.A.5-4 ..... UNITAD Revision 09A
12.A.5-5 ..... UNITAD Revision 09A
12.B-1 ..... UNITAD Revision 09A
12.B-2 ..... UNITAD Revision 09A
12.B-3 ..... UNITAD Revision 09A
12.B-4 ..... UNITAD Revision 09A
12.B.1-1 ..... UNITAD Revision 09A
12.B.2-1 ..... UNITAD Revision 09A
12.B.2-2 ..... UNITAD Revision 09A
12.B.2-3 ..... UNITAD Revision 09A
12.B.2-4 ..... UNITAD Revision 09A
12.B.2-5 ..... UNITAD Revision 09A

List of Effective Pages (continued)

12.B.2-6 ..... UNITAD Revision 09A
12.B.2-7 ..... UNITAD Revision 09A
12.B.2-8 ..... UNITAD Revision 09A
12.B.2-9 ..... UNITAD Revision 09A
12.B.2-10 ..... UNITAD Revision 09A
12.B.2-11 ..... UNITAD Revision 09A
12.B.2-12 ..... UNITAD Revision 09A
12.B.2-13 ..... UNITAD Revision 09A
12.B.2-14 ..... UNITAD Revision 09A
12.B.2-15 ..... UNITAD Revision 09A
12.B.2-16 ..... UNITAD Revision 09A
12.B.2-17 ..... UNITAD Revision 09A
12.B.2-18 ..... UNITAD Revision 09A
12.B.2-19 ..... UNITAD Revision 09A
12.B.2-20 ..... UNITAD Revision 09A
12.B.2-21 ..... UNITAD Revision 09A
12.B.2-22 ..... UNITAD Revision 09A
12.B.2-23 ..... UNITAD Revision 09A
12.B.2-24 ..... UNITAD Revision 09A
12.B.3-1 ..... UNITAD Revision 09A
12.B.3-2 ..... UNITAD Revision 09A
12.B.3-3 ..... UNITAD Revision 09A
12.B.3-4 ..... UNITAD Revision 09A
12.B.3-5 ..... UNITAD Revision 09A
12.B.3-6 ..... UNITAD Revision 09A
12.B.3-7 ..... UNITAD Revision 09A
12.B.3-8 ..... UNITAD Revision 09A
12.B.3-9 ..... UNITAD Revision 09A
12.B.3-10 ..... UNITAD Revision 09A
12.B.3-11 ..... UNITAD Revision 09A
12.B.3-12 ..... UNITAD Revision 09A
12.B.3-13 ..... UNITAD Revision 09A
12.C-1 ..... UNITAD Revision 09A
12.C-2 ..... UNITAD Revision 09A
12.C.1-1 ..... UNITAD Revision 09A
12.C.2-1.....UNITAD Revision 09A
12.C.2-2.....UNITAD Revision 09A
12.C.3-1.....UNITAD Revision 09A
12.C.3-2.....UNITAD Revision 09A
12.C.3-3.....UNITAD Revision 09A
12.C.3-4..... UNITAD Revision 09A
12.C.3-5..... UNITAD Revision 09A
12.C.3-6..... UNITAD Revision 09A
12.C.3-7..... UNITAD Revision 09A
12.C.3-8..... UNITAD Revision 09A
12.C.3-9..... UNITAD Revision 09A
12.C.3-10..... UNITAD Revision 09A
12.C.3-11..... UNITAD Revision 09A
12.C.3-12..... UNITAD Revision 09A
12.C.3-13..... UNITAD Revision 09A
12.C.3-14..... UNITAD Revision 09A
12.C.3-15..... UNITAD Revision 09A
12.C.3-16..... UNITAD Revision 09A
12.C.3-17..... UNITAD Revision 09A
12.C.3-18..... UNITAD Revision 09A
12.C.3-19..... UNITAD Revision 09A
12.C.3-20..... UNITAD Revision 09A
12.C.3-21..... UNITAD Revision 09A
12.C.3-22..... UNITAD Revision 09A
12.C.3-23..... UNITAD Revision 09A
12.C.3-24..... UNITAD Revision 09A
12.C.3-25..... UNITAD Revision 09A
12.C.3-26..... UNITAD Revision 09A
12.C.3-27..... UNITAD Revision 09A
12.C.3-28..... UNITAD Revision 09A
12.C.3-29..... UNITAD Revision 09A
12.C.3-30..... UNITAD Revision 09A
12.C.3-31..... UNITAD Revision 09A
12.C.3-32..... UNITAD Revision 09A
12.C.3-33..... UNITAD Revision 09A

List of Effective Pages (continued)

12.C.3-34 ..... UNITAD Revision 09A
12.C.3-35 ..... UNITAD Revision 09A
12.C.3-36 ..... UNITAD Revision 09A
12.C.3-37 ..... UNITAD Revision 09A
12.C.3-38 ..... UNITAD Revision 09A
12.C.3-39 ... UNITAD Revision 09A 8
12.C.3-40 ..... UNITAD Revision 09A

Chapter 13

13-i ..... UNITAD Revision 09A
13-ii..... UNITAD Revision 09A
13.1-1 ..... Revision 0
13.1-2 ..... Revision 0
13.2-1 ..... Revision 0
13.2-2 ..... Revision 0
13.2-3 ..... Revision 0
13.2-4 ..... Revision 0
13.2-5 ..... Revision 0
13.2-6 ..... Revision 0
13.2-7 ..... Revision 0
13.2-8 ..... Revision 3
13.3-1 ..... Revision 3

Appendix 13.A

13.A-i UNITAD Revision 09A
13.A-ii UNITAD Revision 09A
13.A-1 & 13.A-2
UNITAD Revision 09A

Table of Contents

1.0 GENERAL DESCRIPTION 1-1

1.1 Introduction 1.1-1

1.2 General Description of the Universal Storage System 1.2-1
- 1.2.1 Universal Storage System Components 1.2-1
  - 1.2.1.1 Transportable Storage Canister 1.2-2
  - 1.2.1.2 Fuel Baskets 1.2-3
  - 1.2.1.3 Vertical Concrete Cask 1.2-6
  - 1.2.1.4 Transfer Cask 1.2-7
  - 1.2.1.5 Auxiliary Equipment 1.2-9
  - 1.2.1.6 Universal Transport Cask 1.2-11
- 1.2.2 Operational Features 1.2-12

1.3 Universal Storage System Contents 1.3-1
- 1.3.1 Design Basis Spent Fuel 1.3-1
- 1.3.2 Site Specific Spent Fuel 1.3-2
  - 1.3.2.1 Maine Yankee Site Specific Spent Fuel 1.3-3

1.4 Generic Vertical Concrete Cask Arrays 1.4-1

1.5 UMS® Universal Storage System Compliance with NUREG-1536 ..... 1.5-1

1.6 Identification of Agents and Contractors 1.6-1

1.7 References 1.7-1

1.8 License Drawings 1.8-1
- 1.8.1 License Drawings for the UMS® Universal Storage System 1.8-1
- 1.8.2 Site Specific Spent Fuel License Drawings 1.8-2

Appendix 1.A GENERAL DESCRIPTION
UNITAD Storage System 1.A-i

List of Figures

Figure 1.1-1 Major Components of the Universal Storage System (in Vertical Concrete Cask Loading Configuration) 1.1-3
Figure 1.1-2 Transportable Storage Canister Containing PWR Spent Fuel Basket 1.1-4
Figure 1.1-3 Transportable Storage Canister Containing BWR Spent Fuel Basket 1.1-4
Figure 1.2-1 Vertical Concrete Cask 1.2-15
Figure 1.2-2 Transfer Cask 1.2-16
Figure 1.2-3 Transport Configuration of the Universal Transport Cask 1.2-17
Figure 1.2-4 Transfer Cask and Canister Arrangement 1.2-18
Figure 1.2-5 Vertical Concrete Cask and Transfer Cask Arrangement 1.2-19
Figure 1.2-6 Major Component Configuration for Loading the Vertical Concrete Cask ... 1.2-20
Figure 1.4-1 Typical ISFSI Storage Pad Layout 1.4-2

List of Tables

Table 1-1 Terminology 1-3
Table 1.2-1 Design Characteristics of the UMS® Universal Storage System 1.2-21
Table 1.2-2 Major Physical Design Parameters of the Transportable Storage Canister 1.2-24
Table 1.2-3 Transportable Storage Canister Fabrication Specification Summary 1.2-25
Table 1.2-4 Major Physical Design Parameters of the Fuel Basket 1.2-26
Table 1.2-5 Major Physical Design Parameters of the Vertical Concrete Cask 1.2-27
Table 1.2-6 Vertical Concrete Cask Fabrication Specification Summary 1.2-28
Table 1.2-7 Major Physical Design Parameters of the Transfer Casks 1.2-29
Table 1.5-1 NUREG-1536 Compliance Matrix 1.5-2

Appendix 1.A GENERAL DESCRIPTION
UNITAD Storage System

Table of Contents

Table of Contents 1.A-i
List of Figures 1.A-ii
List of Tables 1.A-ii

1.A GENERAL DESCRIPTION 1.A-1

1.A.1 Introduction 1.A.1-1

1.A.2 General Description of the UNITAD Storage System 1.A.2-1
1.A.2.1 UNITAD Storage System Components 1.A.2-1
1.A.2.1.1 Canister 1.A.2-2
1.A.2.1.2 PWR Fuel Basket 1.A.2-3
1.A.2.1.3 Vertical Concrete Cask 1.A.2-4
1.A.2.1.4 Transfer Cask 1.A.2-6
1.A.2.2 Operational Features 1.A.2-6

1.A.3 UNITAD Storage System Contents 1.A.3-1
1.A.3.1 Design Basis Spent Fuel 1.A.3-1

1.A.4 Vertical Concrete Cask Arrays 1.A.4-1

1.A.5 References 1.A.5-1

1.A.6 UNITAD Storage System Drawings 1.A.6-1

List of Figures

Figure 1.A.1-1 Major Components of the UNITAD Storage System (in Vertical Concrete Cask Loading Configuration) 1.A.1-3
Figure 1.A.1-2 Canister Containing PWR Spent Fuel Basket 1.A.1-4
Figure 1.A.2-1 Vertical Concrete Cask 1.A.2-9
Figure 1.A.4-1 Typical ISFSI Storage Pad Layout 1.A.4-2

List of Tables

Table 1.A-1 Terminology 1.A-2
Table 1.A.2-1 Design Characteristics of the UNITAD Storage System 1.A.2-10
Table 1.A.2-2 Physical Design Parameters of the Canister and Fuel Baskets 1.A.2-11
Table 1.A.2-3 Canister Fabrication Specification Summary 1.A.2-12
Table 1.A.2-4 Concrete Cask Fabrication Specification Summary 1.A.2-13

1.A GENERAL DESCRIPTION

This Safety Analysis Report (SAR) describes the Universal NAC International Transportation, Aging and Disposal (UNITAD) System for the storage of spent fuel. It demonstrates that the UNITAD Storage System satisfies the requirements of the U.S. Nuclear Regulatory Commission (NRC) for spent nuclear fuel storage as prescribed in Title 10 of the Code of Federal Regulations, Part 72 (10 CFR 72) and NUREG-1536.

NAC International's (NAC) Transportation, Aging and Disposal (TAD) System has been designed to comply with the requirements of U.S. Department of Energy (DOE) "Transportation, Aging and Disposal Canister System Performance Specification" (DOE/RW-0585) to provide an integrated system for the safe storage, transport and aging of undamaged pressurized water reactor (PWR) commercial spent nuclear fuel (CSNF). The at-reactor storage component of the UNITAD System is designated the UNITAD Storage System (the Storage System). The transportation package component of the UNITAD System is designated the UNITAD Transportation System (the Transportation System) or Transport Cask. Future disposal of the UNITAD canister at the U.S. Department of Energy Monitored Geological Disposal (MGD) facility will be certified in accordance with 10 CFR 63.

UNITAD is an integrated dry, canister-based spent nuclear fuel Transportation, Aging and Disposal (TAD) system for selected undamaged pressurized water reactor (PWR) commercial spent nuclear fuel (CSNF).

This Safety Analysis Report is formatted in accordance with U.S. NRC Regulatory Guide 3.61. This appendix provides a general description of the major components of the UNITAD Storage System and a description of system operation. Definitions of terminology used throughout this report are summarized in Table 1.A-1. The term "Concrete Cask" or "Cask" is routinely used to refer to the Vertical Concrete Cask (VCC).

Table 1.A-1 Terminology

This section lists and defines the terms used in the UNITAD Storage System related sections of this SAR.

Adapter Plate

A carbon steel plate assembly positioned on the top of the Concrete Cask and used to align the Transfer Cask. It supports the operating mechanism for opening and closing the Transfer Cask shield doors.

Assembly Average Fuel Enrichment

Value calculated by averaging the ^{235}U wt % enrichment over the entire fuel region (UO_2) of an individual fuel assembly, including axial blankets, if present.

Assembly Defect

Any change in the physical as-built condition of the assembly, with the exception of normal in-reactor changes such as elongation from irradiation growth or assembly bow. Example of assembly defects include: (a) missing rods, (b) broken or missing grids or grid straps (spacer), and (c) missing or broken grid springs, etc. An assembly with a defect is damaged only if it cannot meet its fuel-specific and system-related functions.

Breached Spent Fuel Rod

Spent fuel with cladding defects that permit the release of gas from the interior of the fuel rod. A fuel rod breach may be a minor defect (i.e., hairline crack or pinhole), allowing the rod to be classified as undamaged, or be a gross breach requiring a damaged fuel classification.

Burnup

Amount of energy generated during irradiation – measured in MWd/MTU.

Assembly Average Burnup

Value calculated by averaging the burnup over the entire fuel region (UO_2) of an individual fuel assembly, including axial blankets, if present.

Peak Average Rod Burnup

Value calculated by averaging the burnup in any rod over the length of the rod, then using the highest burnup calculated as the peak average rod burnup.

Table 1.A-1 Terminology (continued)

Confinement System

The components of the TSC assembly that retain the spent fuel during storage.

Contents

Up to 21 PWR fuel assemblies. The fuel assemblies are confined in a TSC. Nonfuel hardware may be inserted into PWR fuel assemblies.

Damaged Fuel

Spent nuclear fuel (SNF) that cannot fulfill its fuel-specific or system-related function. Spent fuel is classified as damaged under the following conditions.

1) There is visible deformation of the rods in the SNF assembly.

   Note: This is not referring to the uniform bowing that occurs in the reactor; this refers to bowing that significantly opens up the lattice spacing.

2) Individual fuel rods are missing from the assembly and the missing rods are not replaced by a solid dummy rod that displaces a volume equal to, or greater than, the original fuel rod.

3) The SNF assembly has missing, displaced or damaged structural components such that:

   3.1) Radiological and/or criticality safety is adversely affected (e.g., significantly changed rod pitch); or

   3.2) The assembly cannot be handled by normal means (i.e., crane and grapple); or

   3.3) The assembly contains fuel rods with damaged or missing grids, grid straps, and/or grid springs producing an unsupported length greater than 60 inches.

   Note: Assemblies with the following structural defects meet system-related functional requirements and are, therefore, classified as undamaged: Assemblies with missing or damaged grids, grid straps and/or grid springs resulting in an unsupported fuel rod length not to exceed 60 inches.

4) Any SNF assembly that contains fuel rods for which reactor operating records (or other records or tests) cannot support the conclusion that they do not contain gross breaches.

   Note: Breached fuel rods with minor cladding defects (i.e, pinhole leaks or hairline cracks that will not permit significant release of particulate matter from the spent fuel rod) meet system-related functional requirements and are, therefore, classified as undamaged.

Table 1.A-1 Terminology (continued)

5) The SNF assembly is no longer in the form of an intact fuel bundle (e.g., consists of or contains debris such as loose fuel pellets or rod segments).

Factor of Safety

An analytically determined value defined as the allowable stress or displacement of a material divided by its calculated stress or displacement.

Fuel Basket (Basket)

The tube-and-disk structure located within the UNITAD Canister that provides structural support, criticality control and primary heat transfer paths for the contents.

Support Disk

The primary lateral load-bearing component of the fuel basket. The PWR support disk is a circular stainless steel plate with 21 square holes machined in a symmetrical pattern. Each square hole is a location for a fuel tube.

Heat Transfer Disk

A circular aluminum plate with 21 square holes machined in a symmetrical pattern. The heat transfer disk enhances heat transfer in the fuel basket.

Fuel Tube

A square cross-section, borated stainless steel tube constructed of four interlocking plates. One fuel tube is inserted through each square hole in the support disks and heat transfer disks. Cask fuel assemblies are loaded into the fuel tubes.

Tie Rod

One of eight stainless steel rods used to align, retain and support the support disks and the heat transfer disks in the fuel basket structure. The tie rods extend from the top weldment to the bottom weldment.

Split Spacer/Spacer

Installed on the tie rods between the support disks, the heat transfer disks, and the top and bottom weldments to properly position the aluminum heat transfer disks and to provide axial support for the support disks.

Grossly Breached Spent Fuel Rod

A breach in the spent fuel cladding that is larger than a pinhole or hairline crack. A gross cladding breach may be established by visual examination with the capability to determine if the fuel pellet can be seen through the cladding, or through a review of reactor operating records indicating the presence of heavy metal isotopes.

Table 1.A-1 Terminology (continued)

Intact Fuel (Assembly or Rod)

Any fuel that can fulfill all fuel-specific and system-related functions and that is not breached.

Spent Nuclear Fuel (or Spent Fuel)

Irradiated fuel assemblies with the same configuration as when originally fabricated, consisting generally of the end fittings, fuel rods, guide tubes, and integral hardware. For PWR fuel, a thimble plug, an in-core instrument thimble, a burnable poison rod insert, or a control element assembly (CEA) is considered to be a component of standard fuel. For BWR fuel, the channel is considered to be integral hardware. Solid filler rods, burnable poison rods, burnable poison rod assemblies, thimble plugs, control element assemblies and stainless steel rod inserts may be inserted in PWR fuel assemblies.

Transfer Cask

A shielded device used to lift and handle the TSC during fuel loading and closure operations, as well as to transfer the TSC in/out of the concrete cask during storage or in/out of a transport cask. The transfer cask includes two lifting trunnions and two shield doors that can be opened to permit the vertical transfer of the TSC.

Trunnions

Two low-alloy steel components used to lift the transfer cask in a vertical orientation via a lifting assembly.

TSC (Transportable Storage Canister)

The stainless steel cylindrical shell, bottom-end plate, closure lid, closure ring, and redundant port covers that contain the fuel basket structure and the spent fuel contents.

Closure Lid

A thick, stainless steel disk installed directly above the fuel basket following fuel loading. The closure lid provides the confinement boundary for storage and operational shielding during TSC closure.

Drain and Vent Ports

Penetrations located in the closure lid to permit draining, drying, and helium backfilling of the TSC.

Port Cover

The stainless steel plates covering the vent and drain ports that are welded in place following draining, drying, and backfilling operations.

Closure Ring

A stainless steel ring welded to the closure lid and TSC shell to provide a double weld redundant sealing closure of the TSC satisfying 10 CFR 72.236(e) requirements.

Table 1.A-1 Terminology (continued)

Undamaged Fuel

Spent nuclear fuel that can meet all fuel-specific and system-related functions. Undamaged fuel is spent nuclear fuel that is not Damaged Fuel, as defined herein, and does not contain assembly structural defects that adversely affect radiological and/or criticality safety. As such, undamaged fuel may contain:

a) Breached spent fuel rods (i.e, rods with minor defects up to hairline cracks or pinholes), but cannot contain grossly breached fuel rods;

b) Grid, grid strap and/or grid spring damage, provided that the unsupported length of the fuel rod does not exceed 60 inches.

UNITAD Storage System

The at-reactor storage component of the UNITAD System designed by NAC for the storage of selected PWR CSNF assemblies.

Vertrical Concrete Cask (VCC) (Concrete Cask)

A concrete cylinder that holds the TSC during storage. The Concrete Cask is formed around a steel inner liner and base and is closed by a lid.

Base

A carbon steel weldment incorporating the air inlets and the pedestal that supports the TSC inside of the Concrete Cask.

Lid

A thick concrete and carbon steel closure for the concrete cask. The lid precludes access to the TSC and provides radiation shielding.

Liner

A carbon steel shell that forms the inside diameter of the concrete cask. The liner serves as the inner form during concrete pouring and provides radiation shielding and structural protection for the TSC.

Standoffs (Channels)

Carbon steel weldments attached to the liner that assist in centering the TSC in the concrete cask and supporting the TSC and its contents in a nonmechanistic tip-over event.

1.A.1 Introduction

The UNITAD Storage System (Storage System) is a spent fuel dry storage system that uses a Vertical Concrete Cask (VCC) and a stainless steel Canister with a double welded closure to safely store spent fuel. The Canister is stored in the central cavity of the Concrete Cask and is compatible with the UNITAD Transportation System Cask for future off-site shipment. The Concrete Cask provides radiation shielding and structural protection for the stored canister, and contains internal air flow paths that allow the decay heat from the Canister contents to be removed by natural air circulation around the canister shell. The Storage System is designed and analyzed for a minimum 100-year at-reactor maintainable service lifetime. The Storage System design and analyses are performed in accordance with 10 CFR 72, ANSI/ANS 57.9 and the applicable sections of the ASME Boiler and Pressure Vessel Code and the American Concrete Institute Code.

The principal components of the Storage System are the Canister, the Concrete Cask, and the Transfer Cask. The loaded Canister is moved to and from the Concrete Cask by using the Transfer Cask. The Transfer Cask provides radiation shielding while the Canister is being closed and sealed and while the Canister is being transferred. The Canister is placed in the Concrete Cask by positioning the Transfer Cask with the loaded Canister on top of the Concrete Cask and lowering the Canister into the Concrete Cask. Figure 1.A.1-1 depicts the major components of the Storage System in such a canister transfer operation configuration.

In at-reactor storage, the Canister is placed in the Concrete Cask, which provides passive radiation shielding and natural convection cooling. The Concrete Cask also provides structural protection for the Canister during accidents and under adverse environmental conditions. The Canister employs a double-welded closure design and dual, welded port covers to preclude loss of contents and to preserve the general health and safety of the public during at-reactor storage of commercial spent nuclear fuel (CSNF).

The UNITAD Storage System is designed to safely store up to 21 PWR fuel assemblies. The fuel specifications and parameters that serve as the design basis for the UNITAD Storage System are presented in Table 2.A.2-1. The CSNF considered in the design basis includes fuel assemblies that have different overall lengths. The range of overall lengths of the PWR fuel assembly population is grouped into two lengths. To accommodate the two fuel lengths, the Storage System principal components—the Canister, Transfer Cask and Concrete Cask—are provided in two different lengths. The length designations of these principal components, and corresponding lengths, are shown on the License Drawings. The identification of representative

fuel assemblies is shown in Table 6.A.2-1. Fuel assemblies are grouped to facilitate licensing evaluations and bounding configurations are evaluated. Fuel assemblies may include nonfuel-bearing components. The two Canister lengths to accommodate the various PWR fuel assemblies and nonfuel bearing components are designated Type 1 with a Canister cavity length of 185 inches and Type 2 with a cavity length of 175 inches. Each of the Canisters is stored in a Concrete Cask of a length designed to accommodate that specific Canister length. The fuel is loaded into the appropriate Canister prior to movement of the Canister into the Concrete Cask. Figure 1.A.1-2 depicts a Canister containing a PWR spent fuel basket.

The Transfer Cask is used to lift and handle the Canister during fuel loading and to move the Canister from the workstations where the Canister is loaded and closed to the Concrete Cask. The Transfer Cask is also used to transfer the Canister from the Concrete Cask to the Transport Cask for transport.

Figure 1.A.1-1 Major Components of the UNITAD Storage System (in Vertical Concrete Cask Loading Configuration)

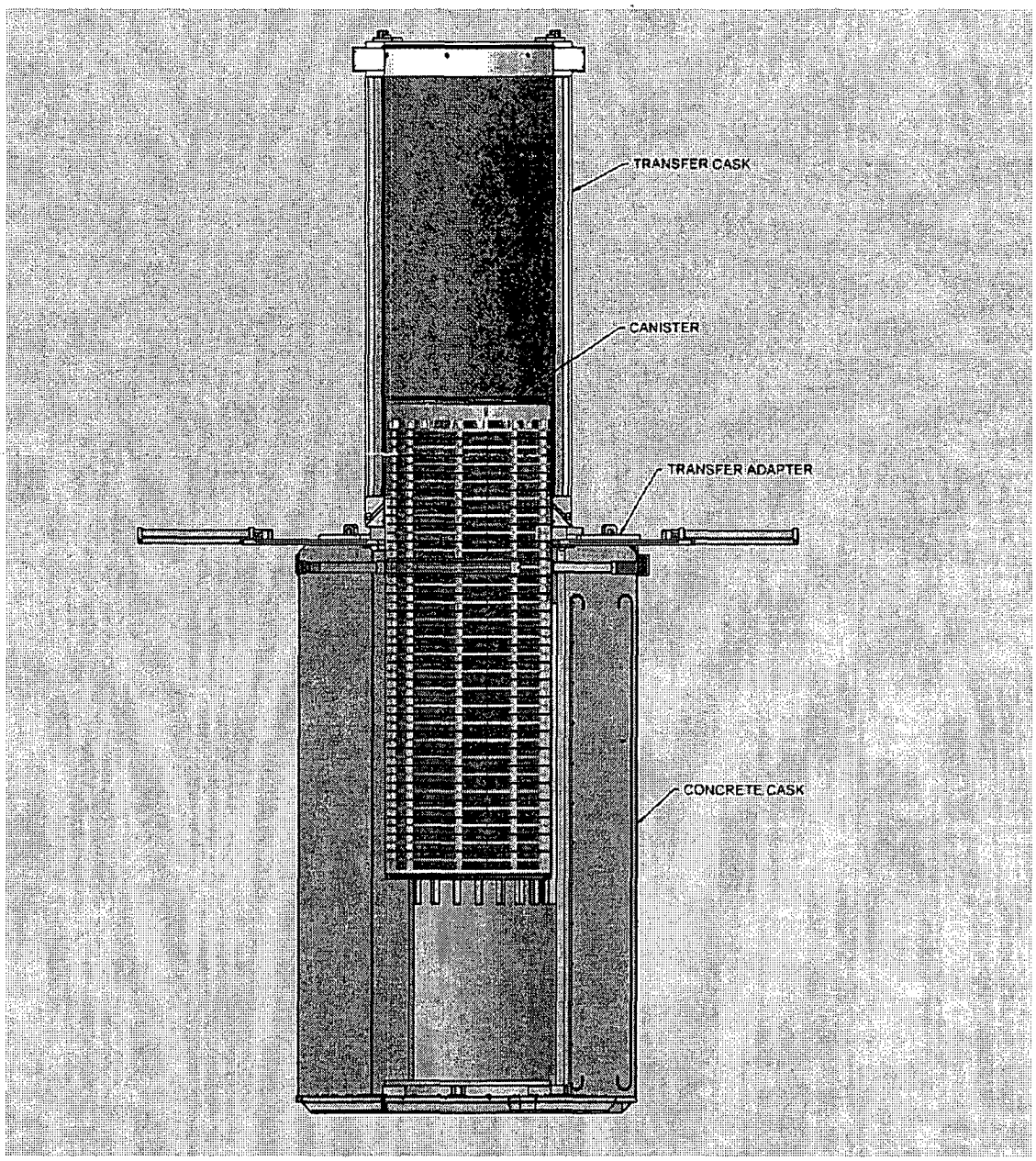

Figure 1.A.1-2 Canister Containing PWR Spent Fuel Basket

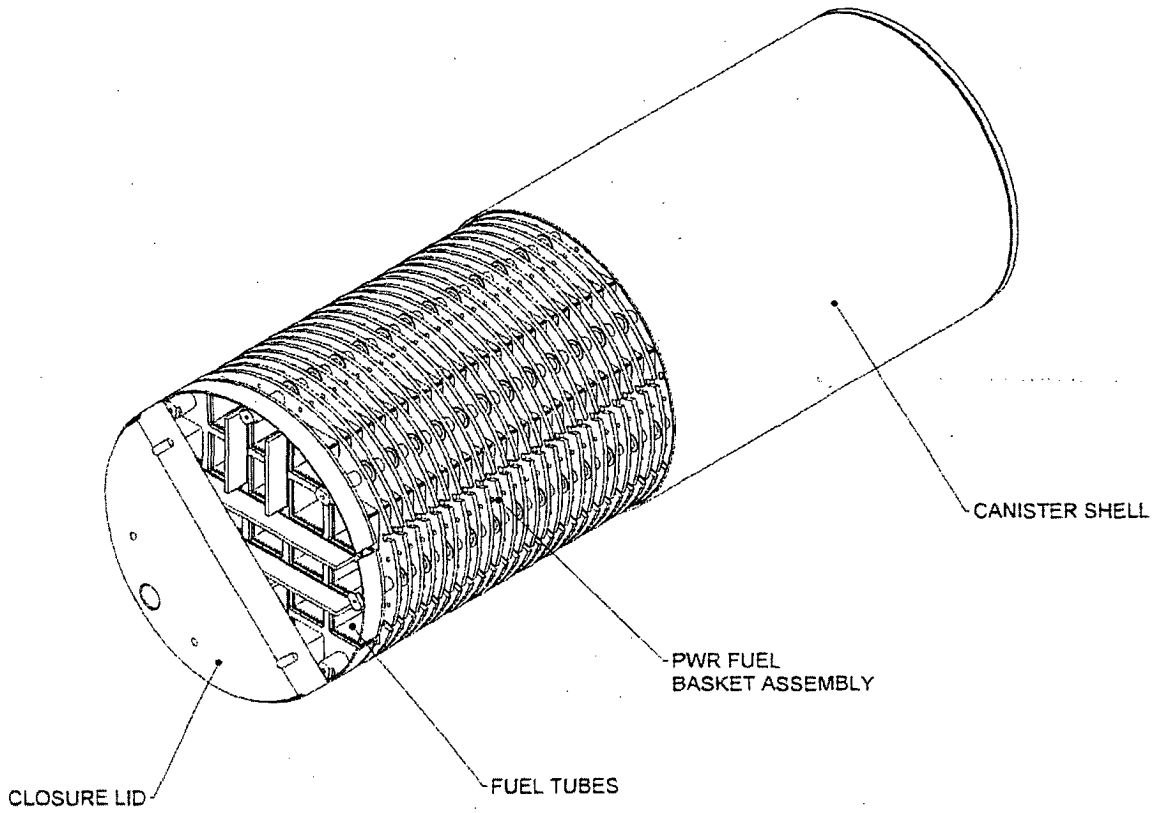

1.A.2 General Description of the UNITAD Storage System

The UNITAD Storage System provides long-term storage for two lengths (Type 1 and Type 2) of PWR fuel for subsequent transport using a UNITAD Transport Cask. During at-reactor storage, the Storage System provides an inert environment, passive shielding, structural protection, cooling, criticality control and a confinement boundary closed by welding. The structural integrity of the UNITAD Storage System precludes the release of contents in any of the design basis normal conditions and off-normal or accident events, thereby assuring public health and safety during use of the system.

1.A.2.1 UNITAD Storage System Components

The design and operation of the principal components of the UNITAD Storage System and the associated ancillary equipment are described in the following sections. The calculated weights of the principal components are provided in Section 3.A.2.

The UNITAD Storage System consists of three principal components:

- Canister (including PWR fuel basket)
- Vertical Concrete Cask
- Transfer Cask

The design characteristics of these components are presented in Table 1.A.2-1.

Ancillary equipment needed to use the Storage System includes:

- Automated or manual welding equipment
- Suction pump, vacuum drying, helium backfill and leak detection equipment
- A vertical cask transporter, or heavy-haul trailer and air pads (for transport of the loaded Concrete Cask to the storage pad)
- An adapter plate, hardware and hydraulic system to position the Transfer Cask with respect to the Storage or Transport Cask
- A lift yoke for the Transfer Cask
- Lifting slings for handling of the Canister, closure lid and other system components

In addition to these items, the Storage System requires utility services (electric, helium, air and water), common tools and fittings, welding materials and miscellaneous hardware.

1.A.2.1.1 Canister

Two lengths of Canisters accommodate the PWR fuel assemblies. The Canister is designed to be transported in the UNITAD Transport Cask. Transport conditions establish the design basis load conditions for the Canister, except for Canister lifting. The transport load conditions produce higher stresses in the Canister than would be produced by the storage load conditions. Consequently, the Canister design is conservative with respect to storage conditions.

The Canister Assembly consists of a stainless steel canister that contains the fuel basket structure and contents. The Canister is defined as confinement for the spent fuel during storage and is provided with a double-welded closure system and is designed, fabricated and tested/inspected to meet the requirements of ISG-15 and ISG-18. The welded closure system prevents the release of contents in any design basis normal conditions and off-normal or accident events. The basket assembly in the Canister provides the structural support and primary heat transfer path for the fuel assemblies, while maintaining a subcritical configuration for all normal conditions of storage, off-normal events and hypothetical accident events. The PWR fuel basket is discussed in Section 1.A.2.1.2.

The major components of the Canister are the shell and bottom plate, basket assembly, closure lid, port covers and closure ring. The Canister, closure lid, and inner port covers provide: a confinement boundary during storage; shielding; and a means for lifting the basket and contents. The Canister design parameters for the two lengths (types) are provided in Table 1.A.2-2.

The Canister consists of a cylindrical, 1/2-inch thick Type 304 stainless steel shell with a 2-inch thick Type 304/304L stainless steel bottom plate and four (4) Type 304 stainless steel lifting lugs for (empty basket and canister) handling. The maximum outside diameter of the Canister shell is 66.5 inches. A basket assembly is placed inside the Canister. The closure lid assembly is an 8-inch thick Type 304 stainless steel disk that is positioned on the lifting lugs above the basket assembly. The closure lid is welded to the Canister after the Canister is loaded and moved to the workstation for completion of Canister closure activities. Two penetrations through the closure lid are provided for draining, vacuum drying and backfilling the Canister with helium. The drain pipe is threaded into the closure lid after the Canister is moved to the workstation. The vent penetration in the closure lid is used to aid water removal and for vacuum drying and backfilling the Canister with helium. After the closure lid is welded in place, it is pressure tested.

The closure ring is a 3/4-inch Type 304 stainless steel bar positioned on top of the closure lid at its outer diameter and welded to the Canister shell and closure lid after the closure lid is welded in place and the Canister is drained, dried, and backfilled with helium. Removable lifting fixtures, installed in the six (6) closure lid, threaded holes are used to lift and lower the loaded Canister.

The Canister is designed, fabricated and inspected to the requirements of the ASME Boiler and Pressure Vessel Code (ASME Code), Section III, Division I, Subsection NB, except as noted in the Alternatives to the ASME Code provided in Table 2.A.2-2. A summary of the Canister fabrication specifications is presented in Table 1.A.2-3.

1.A.2.1.2 PWR Fuel Basket

The Canister contains a fuel basket that positions and supports the stored fuel (up to 21 PWR fuel assemblies) in an aligned configuration for normal conditions and off-normal and accident events. The fuel basket is designed and fabricated to the requirements of ASME Code, Section III, Division I, Subsection NG, except as noted in the alternative to the ASME Code provided in Table 2.A.2-2.

The PWR fuel basket is constructed of Type 304 stainless steel, but incorporates aluminum disks for enhanced heat transfer. The fuel basket design is a right-circular cylinder configuration with square fuel tubes laterally supported by a series of support disks. The basket design parameters for the two lengths (types) of Canisters are provided in Table 1.A.2-2. The stainless steel and aluminum disks are retained by eight tie rods connecting the top and bottom weldments and are secured by top nuts and bottom pads. The top nut is torqued at installation prior to seal welding to provide a solid load path in compression between the support disks. The support disks are fabricated of Type 304 stainless steel, are spaced axially at 6.5 inches center-to-center and contain 10.07-inch square holes for the fuel tubes. The Type 1 basket contains 27 support disks and the Type 2 basket contains 25 support disks.

The top and bottom weldments are fabricated from Type 304 stainless steel and are geometrically similar to the support disks. The tie rods, top nuts and bottom pads are fabricated from Type 304 stainless steel. The 9.88-inch outside (9.00-inch inside) square cross-section fuel tubes are fabricated from four 0.44-inch thick interlocking plates of A887-89, Grade A, borated stainless steel. No welding is required. The borated stainless steel acts as a neutron absorber to provide criticality control in the basket. No credit is taken for the fuel tubes for structural strength of the basket.

The holes in the top weldment are 8.95-inches square. The holes in the bottom weldment are 8.95-inches square. The basket design retains the fuel tube between the top and bottom weldments, thereby preventing axial movement of the fuel tube. The support disk configuration includes webs between the fuel tubes with variable widths depending on location.

The PWR basket design incorporates Type 6061-T651aluminum alloy heat transfer disks to enhance heat transfer in the basket. Twenty-six heat transfer disks are contained in the Type 1 basket and the Type 2 basket contains 24 heat transfer disks. The heat transfer disks are spaced and supported by the tie rods and split-spacers, which also support and locate the support disks. The heat transfer disks, located at the center of the axial spacing between the support disks, are sized to eliminate contact with the Canister inner shell and the fuel tubes due to differential thermal expansion.

The Canister is designed to facilitate filling with water and subsequent draining. Water fills and drains freely between the support and heat transfer disks through three separate paths. One path is the gaps that exist between the disks and the Canister shell. The second path is through the gaps between the fuel tubes and the disks that surround the fuel tubes. The third path is through eight 1.00-inch diameter holes in each of the support disks and eight 1.00-inch diameter holes in each of the heat transfer disks that are intended to provide additional paths for water flow between disks. The basket bottom weldment supports the fuel tubes above the Canister bottom plate. The fuel tubes are open at the top and bottom ends, allowing the free flow of water from the bottom of the fuel tube. The bottom weldment is positioned by supports one inch above the Canister bottom plate to facilitate water flow to the sump and drain line. These design features ensure that water flows freely in the basket so that the Canister fills and drains evenly. The fuel assemblies are loaded into each fuel tube and sit directly on the Canister bottom plate.

1.A.2.1.3 Vertical Concrete Cask

The Vertical Concrete Cask is the storage overpack for the Canister. Two Concrete Casks of different lengths are designed to store two different length Canisters containing PWR fuel assemblies. The Concrete Cask provides structural support, shielding, protection from environmental conditions, and natural convection cooling of the Canister during at-reactor storage. Table 1.A.2-1 lists the principal physical design parameters of the Concrete Cask.

The Concrete Cask is a reinforced concrete (Type II Portland cement) structure with a structural steel inner liner. The concrete wall and steel liner provide the neutron and gamma radiation shielding. Inner and outer reinforcing steel (rebar) assemblies are contained within the concrete.

The reinforced concrete wall provides the structural strength to protect the Canister and its contents in natural phenomena events such as tornado wind loading and wind-driven missiles. The Concrete Cask incorporates reinforced chamfered corners at the edges to facilitate construction. The Vertical Concrete Cask is shown in Figure 1.A.2-1.

The Vertical Concrete Cask forms an annular air passage to allow the natural circulation of air around the Canister to remove the decay heat from the spent fuel. The air inlets and outlets are steel-lined penetrations that take non-planar paths to the Concrete Cask cavity to minimize radiation streaming. A baffle assembly directs inlet air upward and around the pedestal that supports the Canister. The weldment structure includes the baffle assembly configuration, as shown in Drawing 630050-561. The decay heat is transferred from the fuel assemblies to the tubes in the fuel basket and through the heat transfer disks to the Canister wall. Heat flows by radiation and convection from the Canister wall to the air circulating through the Concrete Cask annular air passage and is exhausted through the air outlets. This passive cooling system is designed to maintain the peak cladding temperature of the zirconium alloy-clad fuel well below acceptable limits during long-term storage. This design also maintains the bulk concrete temperature below 150°F and localized concrete temperatures below 200°F in normal operating conditions. The inner liner of the Concrete Cask incorporates standoffs that provide lateral support to the Canister in side impact accident events (e.g., non-mechanistic tip-over).

The top of the Vertical Concrete Cask is closed by a carbon steel and concrete lid. The lid is approximately 6.80-inches thick. The carbon steel plates provide gamma radiation shielding and the concrete provides neutron radiation shielding. The lid reduces skyshine radiation and provides a cover and seal to protect the Canister from the environment and postulated tornado missiles. The lid assembly is designed to limit the maximum contact dose rate on the horizontal top surfaces of the Vertical Concrete Cask to less than or equal to 150 mrem/hr.

Fabrication of the Concrete Cask involves no unique or unusual forming, concrete placement or reinforcement requirements. The concrete portion of the Concrete Cask is constructed by placing concrete between a reusable, exterior form and the inner metal liner. Reinforcing bars are used near the inner and outer concrete surfaces to provide structural integrity. The inner liner and base of the Concrete Cask are shop fabricated. The principal fabrication specifications for the Concrete Cask are shown in Table 1.A.2-4.

1.A.2.1.4 Transfer Cask

The Transfer Cask is designed, fabricated and tested to meet the requirements of ANSI N14.6 as a special lifting device. The Transfer Cask provides biological shielding and structural protection for a loaded Canister, and is used to lift and move the Canister between workstations. The Transfer Cask is also used to place a Canister into a Concrete Cask or a Transport Cask. There are two lengths of Transfer Casks designed to accommodate the two Canister lengths.

The Transfer Cask design incorporates three retaining blocks, pin-locked in place, to prevent a loaded Canister from being inadvertently lifted through its top opening. The Transfer Cask has retractable bottom shield doors. During Canister loading and handling operations, the shield doors are closed and secured. After placement of the Transfer Cask on the Transfer Adapter on top of the Concrete Cask, the doors are retracted using hydraulic cylinders and a hydraulic supply provided by the Transfer Adapter. The Canister is then lowered into the Concrete Cask for storage. Refer to Figure 1.A.1-1 for the general arrangement of the Transfer Cask, Canister and Concrete Cask during loading, and Table 1.A.2-1 for the principal dimensions and materials of fabrication of the Transfer Cask.

Sixteen penetrations, eight at the top and eight at the bottom, are available to provide a water supply to the Transfer Cask annulus. Penetrations not used for water supply or draining are capped. The Transfer Cask annulus is isolated using inflatable seals located between the Transfer Cask inner shell and the Canister near the upper and lower ends of the Transfer Cask. Clean or demineralized spent fuel pool water flow into the annulus is used during in-pool fuel loading to minimize the potential for contamination of the Canister exterior surfaces.

The Transfer Cask penetrations can also be used for the introduction of auxiliary forced air or gas to cool the exterior of the Canister. Alternately, if auxiliary cooling is required to lower fuel cladding or Canister component temperatures, the loaded Canister may be returned to the spent fuel pool floor or shelf for cooling.

1.A.2.2 Operational Features

In storage, the UNITAD Storage System does not require any active operational systems. The principal Storage System operational activities are loading, welding and preparing the Canister for storage, and transferring the Canister to the Concrete Cask. The Transfer Cask is designed to meet the requirements of these operations. The Transfer Cask holds the Canister during fuel

loading operations, provides biological shielding during Canister closure and preparation operations, and positions the Canister for transfer into the Concrete Cask.

The detailed generic step-by-step operating procedures for the loading and transferring of the Canister are presented in Chapter 8. Following is an overview of the major loading activities. This overview general operational sequence assumes that the empty Canister is installed in the Transfer Cask.

- Fill the Canister with water, or borated water, if required.
- Lift the Transfer Cask over the pool, start the flow of clean water to the annulus and lower the cask to the bottom of the pool.
- Load the selected spent fuel assemblies into the Canister.
- Lower the closure lid into position in the Canister.
- Remove the Transfer Cask from the pool and place it in the cask preparation workstation.
- Decontaminate the Transfer Cask.
- Lower the Canister water level and weld the closure lid to the Canister shell. Examine the weld.
- Hydrostatically test the Canister.
- Install and weld the closure ring. Examine the welds.
- Drain the remaining pool water from the Canister.
- Dry the Canister cavity. Verify cavity dryness.
- Establish a helium backfill.
- Install and weld the inner vent and drain port covers. Examine the welds.
- Helium leak test the inner vent and drain port covers.
- Install and weld the outer vent and drain port covers. Examine the welds.
- Install the Canister lifting system.
- Install the transfer adapter on top of the Concrete Cask.
- Lift and place the Transfer Cask on the transfer adapter on top of the Concrete Cask.
- Attach the Canister lifting system to the crane hook and raise the Canister just off of the shield doors.
- Open the shield doors.
- Lower the Canister into the Concrete Cask (see Figure 1.A.1-1).
- Remove the Transfer Cask, transfer adapter and Canister lifting systems.

- Install the lid on the Concrete Cask.
- Move the loaded Concrete Cask to its designated location on the storage pad.

The Canister unloading and spent fuel removal from the Canister are essentially the reverse of these steps, except that weld removal and cooldown of the contents is required. This typical sequence of operations, and individual steps, may be modified by the approved site procedure to accommodate specific site requirements, as long as the requirements of the Technical Specifications and the Certificate of Compliance are met.

Figure 1.A.2-1 Vertical Concrete Cask

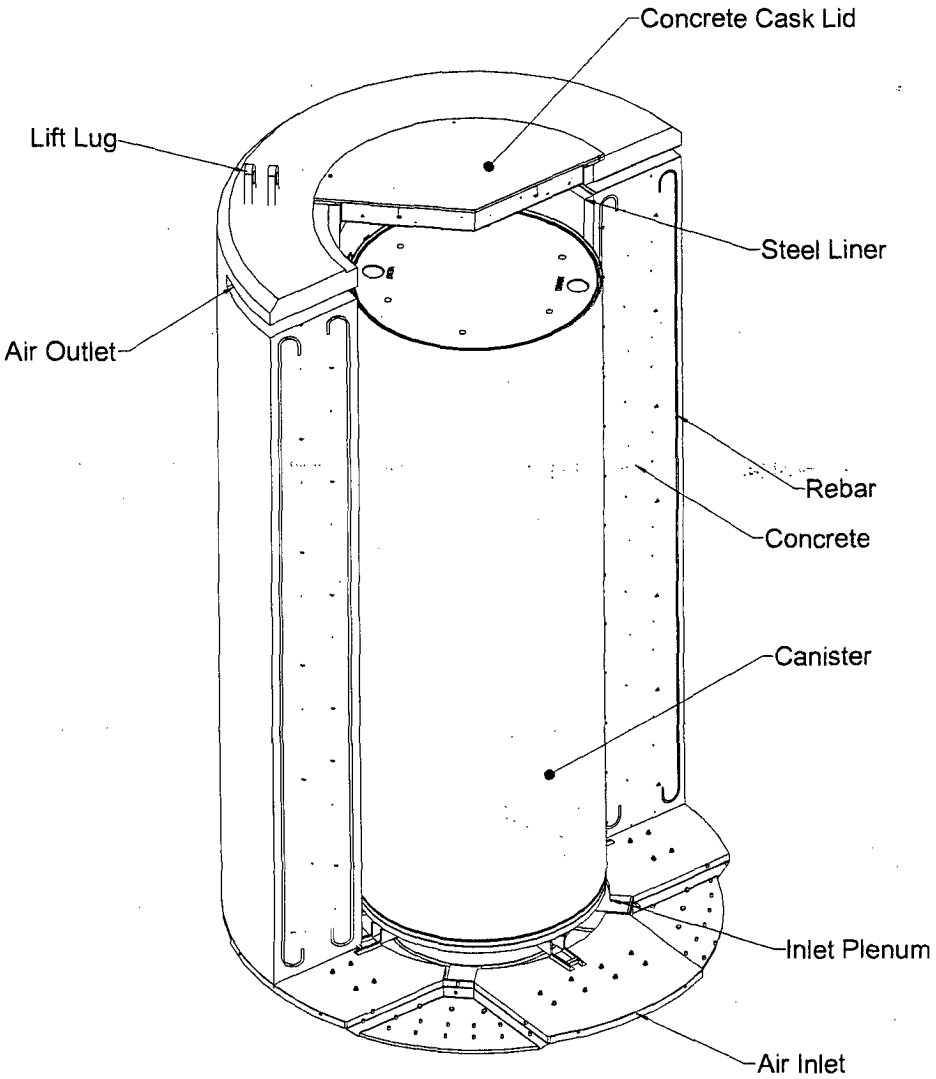

Table 1.A.2-1 Design Characteristics of the UNITAD Storage System

	Design Characteristic	Nominal Value (in)[a]	Material
Canister	Shell	0.5 × 66.5 O.D.	Stainless Steel
	Bottom	2.0	Stainless Steel
	Closure Lid	8.0	Stainless Steel
	Closure Ring	0.75 square	Stainless Steel
	Length - Overall		
	Type 1	193.0	
	Type 2	183.0	
Fuel Basket	PWR Fuel Tube Wall	0.44	Borated Stainless Steel
	Support Disks	1.0	Stainless Steel
	Heat Transfer Disks	1.0	Aluminum
	Length		
	Type 1	182.5	
	Type 2	172.5	
	Assembly dia.	65.25	
	# of Fuel Tubes/Fuel Loading Positions	21	
Transfer Cask	Outer Shell	1.25 × 82.5 dia.	Low Alloy Steel
	Inner Shell	0.75 × 67.5 dia.	Low Alloy Steel
	Retaining Block	8 × 8.75 × 1.50	17-4PH Stainless Steel
	Trunnions	9.0 dia.	Low Alloy Steel
	Bottom Ring	12 × 82.5 dia.	Low Alloy Steel
	Top Ring	14 × 82.5 dia.	Low Alloy Steel
	Shield Doors	5.0	Low Alloy Steel
	Door Rails	5.25 × 7.5 × 52.0	Low Alloy Steel
	Gamma Shield	3.1	Lead
	Neutron Shield	2.4	NS-4-FR, Solid Synthetic Polymer
Transfer Adapter	Base Plate	2.0	Carbon Steel
	Guide Ring	2.5 × 79 dia.	Carbon Steel
Vertical Concrete Cask	**Weldment Structures**		
	Liner	3.0 × 80 O.D.	Carbon Steel
	Top Flange	1 × 86 dia.	Carbon Steel
	Standoffs (Channels)	3 × 7.5 (S-beam)	Carbon Steel
	Pedestal Plate	2 × 66.5 dia.	Carbon Steel
	Bottom Weldment	1 × 128 in	Carbon Steel
	Inlet Top	2 × 136 dia.	Carbon Steel
	Concrete Cask		
	Concrete Shell	28 × 136 dia.	Type II Portland Cement
	Lid	6.75 × 86 dia.	Carbon Steel
			Type II Portland Cement
	Rebar	various lengths	Carbon Steel

[a] Thickness unless otherwise indicated.

Table 1.A.2-2 Physical Design Parameters of the Canister and Fuel Baskets

Component	Characteristic	Parameter	Nominal Value
Canister	Canister Weldment	Shell Outside Diameter (in) Shell Thickness (in) Bottom Thickness (in)	66.5 0.5 2.0
	Length (in.)	Type 1 Type 2	193.0 183.0
Fuel Basket	Length (in)	Type 1 Type 2	182.5 172.5
	Diameter	Assembly Diameter (in)	65.25
	Number of Fuel Tubes/Fuel Loading Positions	PWR	21

Table 1.A.2-3 Canister Fabrication Specification Summary

Materials

- All materials shall be governed by the referenced drawings and meet the applicable ASME Code sections.

Welding

- Welds shall be in accordance with the referenced drawings.
- Filler metals shall be appropriate ASME Code materials.
- Welders and welding operators shall be qualified in accordance with ASME Code Section IX.
- Welding procedures shall be written and qualified in accordance with ASME Code Section IX.
- Personnel performing weld examinations shall be qualified in accordance with the NAC International Quality Assurance Program and SNT-TC-1A.
- Weld inspection and examination requirements and acceptance criteria are specified in Chapter 9.

Fabrication

- Cutting, welding and forming shall be in accordance with ASME Code, Section III, NB-4000 unless otherwise specified.
- Surfaces shall be cleaned to a surface cleanness classification C, or better, as defined in ANSI N45.2.1, Section 2.
- Fabrication tolerances shall meet the requirements of the referenced drawings after fabrication.

Packaging

- Packaging and shipping shall be in accordance with ANSI N45.2.2.

Quality Assurance

- The Canister shall be fabricated under a quality assurance program that meets 10 CFR 72, Subpart G, and 10 CFR 71, Subpart H.

Table 1.A.2-4 Concrete Cask Fabrication Specification Summary

Materials

- Concrete mix shall be in accordance with the requirements of ACI 318 and ASTM C94.
- Type II Portland Cement, ASTM C150.
- Fine aggregate ASTM C33 or C637.
- Coarse aggregate ASTM C33.
- Admixtures
  - Water Reducing and Superplasticizing ASTM C494.
  - Pozzolanic Admixture (loss on ignition 6% or less) ASTM C618.
- Compressive strength 4,000 psi per ACI 318.
- Specified air entrainment per ACI 318.
- All steel components shall be of the material as specified in the referenced drawings.
- Steel construction shall be in accordance with AWS D1.1 or ASME Code Section VIII requirements.

Construction

- A minimum of two samples for each concrete cask shall be taken in accordance with ASTM C172 and ASTM C31 for the purpose of obtaining concrete slump, density, air entrainment, and compressive strength values. The two samples shall not be taken from the same batch or truck load.
- Test specimens shall be tested in accordance with ASTM C39.
- Formwork shall be in accordance with ACI 318.
- All sidewall formwork shall remain in place in accordance with the requirements of ACI 318.
- Grade, type and details of all reinforcing steel shall be in accordance with the referenced drawings.
- Embedded items shall conform to ACI 318 and the referenced drawings.
- The placement of concrete shall be in accordance with ACI 318.
- Surface finish shall be in accordance with ACI 318.
- Welding and inspection requirements and acceptance criteria are specified in Chapter 9.

Quality Assurance

- The Concrete Cask shall be constructed under a quality assurance program that meets 10 CFR 72, Subpart G.

THIS PAGE INTENTIONALLY LEFT BLANK

1.A.3 UNITAD Storage System Contents

The UNITAD Storage System is designed to store up to 21 intact PWR fuel assemblies. PWR fuel assemblies may be stored with inserted burnable poison rod assemblies, thimble plugs or control element assemblies. The design basis spent fuel contents are subject to the limits presented in Section 1.A.3.1.

1.A.3.1 Design Basis Spent Fuel

The UNITAD Storage System is evaluated based on a set of PWR fuel assembly parameters that establishes bounding conditions for the system. The bounding fuel parameters are provided in Table 2.A.2-1. Fuel assembly designs having parameters bounded by those in Table 2.A.2-1 are acceptable for loading. Four different assembly array sizes – 14×14, 15×15, 16×16 and 17×17 – produced by several different fuel vendors were evaluated in the development of the PWR design basis spent fuel description.

The UNITAD Storage System fuel limits are:

1. The characteristics of the PWR fuel to be stored shall be in accordance with Tables 2.A.2-1.
2. The total decay heat of the PWR fuel shall not exceed 22.0 kW.
3. The maximum initial enrichment shall not exceed 5.0 wt % ^{235}U.
4. The maximum initial enrichment of the PWR fuel is based on a pool/canister water boron content 1,000 parts per million for some fuel parameter combinations.
5. The maximum fuel assembly burnup (MWd/MTU) and minimum cooling time (years) shall be as defined by Table 2.A.2-1.
6. Radiation levels shall not exceed the requirements of 10 CFR 72.104 and 10 CFR 72.106.
7. An inert atmosphere shall be maintained within the Canister.
8. Stainless steel spacers may be used to axially position PWR fuel assemblies that are shorter than the Canister cavity length to facilitate handling.
9. Flow mixers (thimble plugs), in-core instrument thimbles, control element assemblies, burnable poison rods or solid stainless steel rods may be placed in PWR guide tubes as long as the maximum fuel assembly weights listed in Table 2.A.2-1 are not exceeded and no credit for soluble boron is taken.

THIS PAGE INTENTIONALLY LEFT BLANK

1.A.4 Vertical Concrete Cask Arrays

A typical ISFSI storage pad layout for 20 Concrete Casks is provided in Figure 1.A.4-1. As shown in this figure, roads lead to the pad and also run parallel to the sides of the pad to facilitate transfer of the Concrete Cask from the transfer vehicle, or the vertical cask transporter, to the designated storage position on the pad. Loaded Concrete Casks are placed in the vertical orientation on the pad in a linear array. Array sizes could accommodate from 1 to more than 200 casks. Figure 1.A.4-1 shows typical spacing and representative site dimensions. Actual spacing and dimensions are dependent on the general site layout, access roads, site boundaries and transfer equipment selection, but must conform to the spacing or dimension requirements established in Section 8.A.3 of the Operating Procedures.

The reinforced concrete foundation is capable of sustaining the transient loads from the air pads, or the vertical cask transporter, and the general loads of the stored casks. If necessary, the pad can be constructed in phases to meet utility-required expansions.

Figure 1.A.4-1 Typical ISFSI Storage Pad Layout

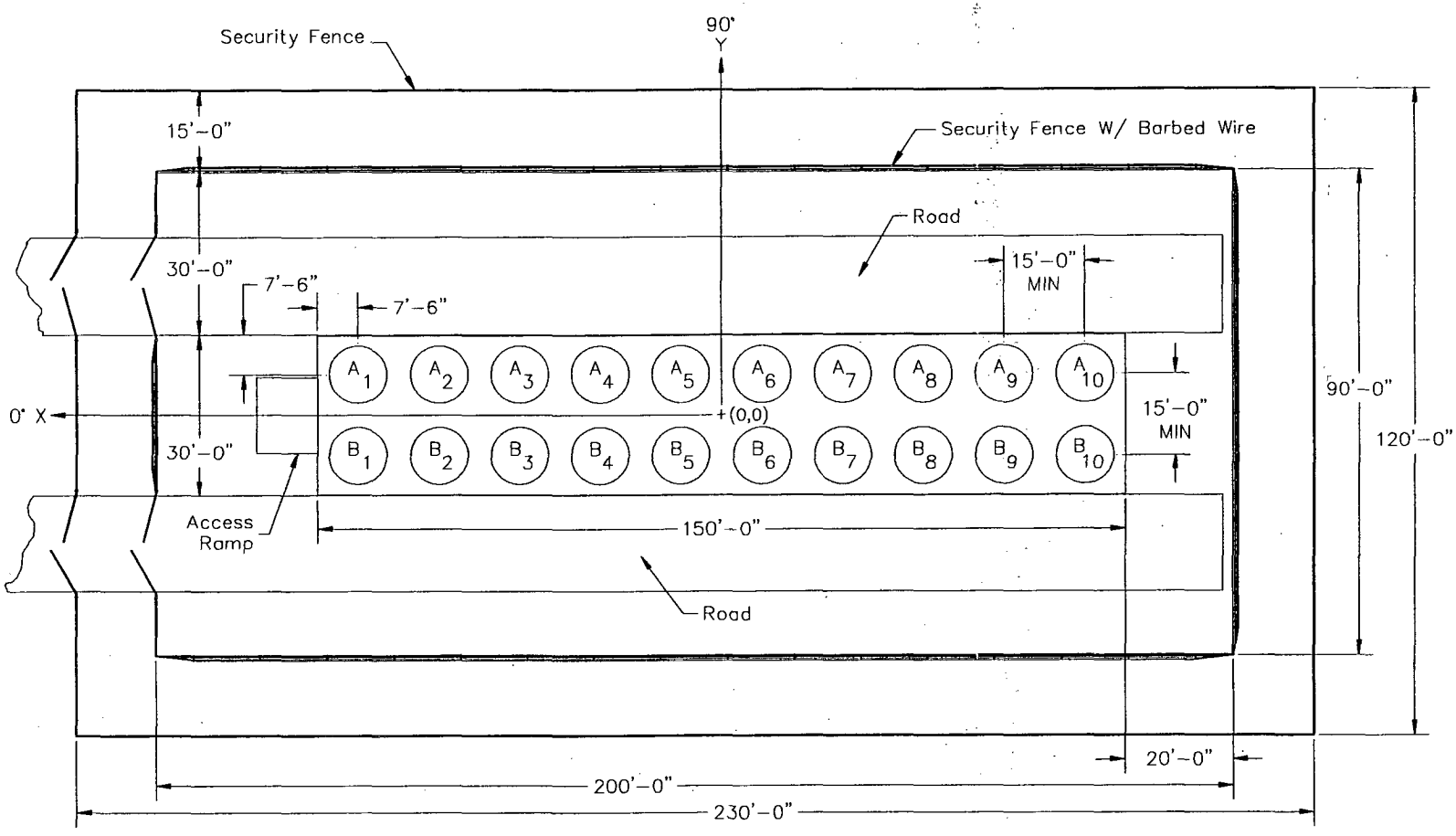

1.A.5 References

1. 10 CFR 72, "Licensing Requirements for the Independent Storage of Spent Nuclear Fuel and High-Level Radioactive Waste and Reactor-Related Greater Than Class C Waste".
2. NUREG-1536, "Standard Review Plan for Dry Cask Storage Systems," 1997, and applicable Interim Staff Guidance documents.
3. 10 CFR 71, "Packaging and Transportation of Radioactive Materials".
4. Regulatory Guide 3.61, "Standard Format and Content for a Topical Safety Analysis Report for a Spent Fuel Dry Concrete Cask".
5. ISG-15, "Materials Evaluation," Revision 0, January 10, 2001.
6. ANSI/ANS 57.9-1992, "Design Criteria for an Independent Spent Fuel Storage Installation (Dry Type)," 1992.
7. ACI 318, "Building Code Requirements for Structural Concrete".
8. ASME Boiler and Pressure Vessel Code, Section III, Subsection NB, "Class I Components," 2004 Edition with 2006 Addenda.
9. ASME Boiler and Pressure Vessel Code, Section III, Subsection NG, "Core Support Structures," 2004 Edition with 2006 Addenda.
10. ISG-11, "Cladding Considerations for the Transport and Storage of Spent Fuel," Revision 3, November 17, 2003.
11. ANSI N14.6-1999, "American National Standard for Radioactive Materials – Special Lifting Devices for Shipping Containers Weighing 10,000 Pounds (4,500 kg) or More," June 1993.
12. ASME Boiler and Pressure Vessel Code, Section IX, "Qualification Standards for Welding and Brazing Procedures, Welders, Brazers, and Welding and Brazing Operators," 2004 Edition with 2006 Addenda.
13. SNT-TC-1A, "Recommended Practices, Nondestructive Testing, Personnel Qualification and Certification, 1992.
14. ANSI N45.2.1, "Cleaning of Fluid Systems and Associated Components During Construction Phase of Nuclear Power Plants," 1994
15. ANSI N45.2.2-1978, "Packaging, Shipping, Receiving, Storage, and Handling of Items for Nuclear Power Plants".

16. ASTM C94[a], "Standard Specification for Ready-Mixed Concrete".

17. ASTM C150[a], "Standard Specification for Portland Cement".

18. ASTM C33[a], "Standard Specification for Concrete Aggregates".

19. ASTM C637[a], "Specification for Aggregates for Radiation-Shielding Concrete".

20. ASTM C494[a], "Standard Specification for Chemical Admixtures for Concrete".

21. ASTM C618[a], "Specification for Fly Ash and Raw or Calcined Natural Pozzolan for Use as a Mineral Admixture in Portland Cement Concrete".

22. ASTM C172[a], "Standard Practice for Sampling Freshly Mixed Concrete".

23. ASTM C31[a], "Method of Making and Curing Concrete Test Specimens in the Field".

24. ASTM C39[a], "Standard Test Method for Compressive Strength of Cylindrical Concrete Specimens".

[a] Current edition of testing standards at time of fabrication/construction is to be used.

1.A.6 UNITAD Storage System Drawings

This section presents the list of drawings for the UNITAD Storage System.

Drawing Number	Title	Revision No.
630050-554	Transfer Cask Assembly, UNITAD	1
630050-561	Structural Weldments, Vertical Concrete Cask, UNITAD	3
630050-562	Reinforcement and Concrete Construction, Vertical Concrete Cask, UNITAD	2
630050-563	Lid Assembly, Vertical Concrete Cask, UNITAD	1
630050-564	Loaded Cask Assembly, Vertical Concrete Cask, UNITAD	2
630050-571	Fuel Tube, PWR Fuel Basket, UNITAD	2
630050-572	Support Disk, PWR Fuel Basket, UNITAD	1
630050-573	Heat Transfer Disk, PWR Fuel Basket, UNITAD	1
630050-574	Top Weldment, PWR Fuel Basket, UNITAD	1
630050-575	Bottom Weldment, PWR Fuel Basket, UNITAD	1
630050-576	Miscellaneous Parts, PWR Fuel Basket, UNITAD	1
630050-577	Assembly, PWR Fuel Basket, UNITAD	1
630050-581	Shell Weldment, Canister, UNITAD	3
630050-582	Drain Tube Assembly, Canister, UNITAD	1
630050-584	Closure Lid Assembly, Canister, UNITAD	2
630050-585	Lift Ring, Canister, UNITAD	1
630050-586	Canister Assembly, Storage, UNITAD	2
630050-588	Port Cover, Canister, UNITAD	1

THIS PAGE INTENTIONALLY LEFT BLANK

Figure Withheld Under 10 CFR 2.390

NAC INTERNATIONAL			
TRANSFER CASK ASSEMBLY, UNITAD (1)			
PROJECT 630050		DRAWING 554	REV 1
SCALE N.T.S.	WEIGHT AS NOTED	SHEET 1 OF 7	4/29/2009

Figure Withheld Under 10 CFR 2.390

NAC INTERNATIONAL

TRANSFER CASK ASSEMBLY, UNITAD (1)

PROJECT 630050		DRAWING 554	REV 1
SCALE N.T.S.	WEIGHT ASNOTED	SHEET 2 OF 7	4/29/2009

Figure Withheld Under 10 CFR 2.390

NAC INTERNATIONAL

TRANSFER CASK ASSEMBLY, UNITAD (1)

PROJECT	DRAWING	REV
630050	554	1

SCALE	WEIGHT	SHEET
N.T.S.	AS NOTED	3 OF 7 4/29/2009

Figure Withheld Under 10 CFR 2.390

NAC INTERNATIONAL

TRANSFER CASK ASSEMBLY, UNITAD (1)

PROJECT 630050		DRAWING 554	REV 1
SCALE N.T.S.	WEIGHT AS NOTED	SHEET 4 OF 7 4/29/2009	

Figure Withheld Under 10 CFR 2.390

NAC INTERNATIONAL

TRANSFER CASK ASSEMBLY, UNITAD (1)

PROJECT 630050		DRAWING 554	REV 1
SCALE N.T.S.	WEIGHT AS NOTED	SHEET 5 OF 7 4/29/2009	

Figure Withheld Under 10 CFR 2.390

NAC INTERNATIONAL

TRANSFER CASK ASSEMBLY, UNITAD (1)

PROJECT	630050	DRAWING	554	REV 1
SCALE N.T.S.	WEIGHT AS NOTED	SHEET 6 OF 7	4/29/2009	

Figure Withheld Under 10 CFR 2.390

NAC INTERNATIONAL

TRANSFER CASK ASSEMBLY, UNITAD (1)

PROJECT 630050		DRAWING 554	REV 1
SCALE N.T.S.	WEIGHT AS NOTED	SHEET 7 OF 7	4/29/2009

Figure Withheld Under 10 CFR 2.390

NAC INTERNATIONAL			
STRUCTURAL WELDMENTS, VERTICAL CONCRETE CASK, UNITAD			
PROJECT 630050		DRAWING 561	REV 3
SCALE N.T.S.	WEIGHT AS NOTED	SHEET 1 OF 5	6/28/2006

Figure Withheld Under 10 CFR 2.390

NAC INTERNATIONAL

STRUCTURAL WELDMENTS,
VERTICAL CONCRETE CASK,
UNITAD

PROJECT	DRAWING	REV
630050	561	3

SCALE	WEIGHT	SHEET
N.T.S.	AS NOTED	2 OF 5 6/26/2009

Figure Withheld Under 10 CFR 2.390

NAC INTERNATIONAL

STRUCTURAL WELDMENTS,
VERTICAL CONCRETE CASK,
UNITAD

PROJECT	630050	DRAWING	561	REV 3
SCALE N.T.S.	WEIGHT AS NOTED	SHEET 3 OF 5	6/26/2009	

Figure Withheld Under 10 CFR 2.390

NAC INTERNATIONAL

STRUCTURAL WELDMENTS, VERTICAL CONCRETE CASK, UNITAD

PROJECT 630050		DRAWING 561	REV 3
SCALE N.T.S.	WEIGHT AS NOTED	SHEET 4 OF 5	8/26/2009

Figure Withheld Under 10 CFR 2.390

NAC INTERNATIONAL

STRUCTURAL WELDMENTS,
VERTICAL CONCRETE CASK,
UNITAD

PROJECT	DRAWING	REV
630050	561	3

SCALE	WEIGHT	SHEET 5 OF 5 6/26/2009
N.T.S.	AS NOTED	

Figure Withheld Under 10 CFR 2.390

NAC INTERNATIONAL			
REINFORCEMENT AND CONCRETE CONSTRUCTION, VERTICAL CONCRETE CASK, UNITAD			
PROJECT 630050		DRAWING 562	REV 2
SCALE N.T.S.	WEIGHT AS NOTED	SHEET 1 OF 4	7/14/2005

Figure Withheld Under 10 CFR 2.390

NAC INTERNATIONAL

REINFORCEMENT AND CONCRETE CONSTRUCTION, VERTICAL CONCRETE CASK, UNITAD

PROJECT 630050		DRAWING 562	REV 2
SCALE N.T.S.	WEIGHT AS NOTED	SHEET 2 OF 4	7/14/2009

Figure Withheld Under 10 CFR 2.390

NAC INTERNATIONAL			
REINFORCEMENT AND CONCRETE CONSTRUCTION, VERTICAL CONCRETE CASK, UNITAD			
PROJECT 630050		DRAWING 562	REV 2
SCALE N.T.S.	WEIGHT AS NOTED	SHEET 3 OF 4 7/14/2009	

Figure Withheld Under 10 CFR 2.390

NAC INTERNATIONAL

REINFORCEMENT AND CONCRETE CONSTRUCTION, VERTICAL CONCRETE CASK, UNITAD

PROJECT 630050		DRAWING 562	REV 2
SCALE	WEIGHT	SHEET 4 OF 4 7/14/2009	

Figure Withheld Under 10 CFR 2.390

NAC INTERNATIONAL

LID ASSEMBLY,
VERTICAL CONCRETE CASK,
UNITAD (1)

PROJECT	DRAWING	REV
630050	563	1

SCALE N.T.S. | WEIGHT AS NOTED | SHEET 1 OF 1 | 4/27/2006

Figure Withheld Under 10 CFR 2.390

NAC INTERNATIONAL

LOADED CASK ASSEMBLY,
VERTICAL CONCRETE CASK,
UNITAD

PROJECT 630050		DRAWING 564	REV 2
SCALE N. T. S.	WEIGHT AS NOTED	SH 1 OF 2	7/17/2009

Figure Withheld Under 10 CFR 2.390

NAC INTERNATIONAL

LOADED CASK ASSEMBLY,
VERTICAL CONCRETE CASK,
UNITAD

PROJECT 630050		DRAWING 564	REV 2
SCALE N. T. S.	WEIGHT AS NOTED	SH 2 OF 2	7/17/2009

Figure Withheld Under 10 CFR 2.390

NAC INTERNATIONAL			
FUEL TUBE, PWR FUEL BASKET, UNITAD			
PROJECT 630050		DRAWING 571	REV 2
SCALE N.T.S.	WEIGHT AS NOTED	SHEET 1 OF 2	6/8/2009

Figure Withheld Under 10 CFR 2.390

NAC INTERNATIONAL

FUEL TUBE,
PWR FUEL BASKET,
UNITAD

PROJECT 630050		DRAWING 571	REV 2
SCALE N.T.S.	WEIGHT AS NOTED	SHEET 2 OF 2 6/8/2009	

Figure Withheld Under 10 CFR 2.390

NAC INTERNATIONAL

SUPPORT DISK,
PWR FUEL BASKET,
UNITAD

PROJECT 630050			DRAWING 572	REV 1
SCALE N.T.S.	WEIGHT 340#		SHEET 1 OF 1	3/13/2009

Figure Withheld Under 10 CFR 2.390

NAC INTERNATIONAL

HEAT TRANSFER DISK,
PWR FUEL BASKET,
UNITAD

PROJECT 630050		DRAWING 573	REV 1
SCALE N.T.S.	WEIGHT 110#	SHEET 1 OF 1	3/13/2009

Figure Withheld Under 10 CFR 2.390

NAC INTERNATIONAL

TOP WELDMENT,
PWR FUEL BASKET,
UNITAD

PROJECT	630050		DRAWING 574	REV 1
SCALE N.T.S		WEIGHT AS NOTED	SHEET 1 OF 1	3/13/2009

Figure Withheld Under 10 CFR 2.390

NAC INTERNATIONAL

BOTTOM WELDMENT,
PWR FUEL BASKET,
UNITAD

PROJECT	DRAWING	REV
630050	575	1
SCALE N.T.S. WEIGHT 520#	SHEET 1 OF 1 3/13/2009	

Figure Withheld Under 10 CFR 2.390

NAC INTERNATIONAL

MISCELLANEOUS PARTS,
PWR FUEL BASKET,
UNITAD

PROJECT	630050	DRAWING	576	REV 1
SCALE N.T.S.	WEIGHT AS NOTED	SHEET 1 OF 2	3/13/2008	

Figure Withheld Under 10 CFR 2.390

NAC INTERNATIONAL

MISCELLANEOUS PARTS,
PWR FUEL BASKET,
UNITAD

PROJECT	630050	DRAWING	576	REV 1
SCALE N.T.S.	WEIGHT AS NOTED	SHEET 2 OF 2	3/13/2009	

Figure Withheld Under 10 CFR 2.390

NAC INTERNATIONAL

ASSEMBLY,
PWR FUEL BASKET,
UNITAD

PROJECT 630050		DRAWING 577	REV 1
SCALE N.T.S.	WEIGHT AS NOTED	SHEET 1 OF 2	3/16/2000

Figure Withheld Under 10 CFR 2.390

NAC INTERNATIONAL

ASSEMBLY,
PWR FUEL BASKET,
UNITAD

PROJECT 630050		DRAWING 577	REV 1
SCALE N.T.S.	WEIGHT AS NOTED	SHEET 2 OF 2 3/16/2009	

Figure Withheld Under 10 CFR 2.390

NAC INTERNATIONAL			
SHELL WELDMENT, CANISTER, UNITAD			
PROJECT 630050		DRAWING 581	REV 3
SCALE N.T.S.	WEIGHT AS NOTED	SHEET 1 OF 2	9/16/2009

Figure Withheld Under 10 CFR 2.390

NAC INTERNATIONAL			
SHELL WELDMENT, CANISTER, UNITAD			
PROJECT 630050		DRAWING 581	REV 3
SCALE N.T.S.	WEIGHT AS NOTED	SHEET 2 OF 2 6/18/2009	

Figure Withheld Under 10 CFR 2.390

NAC INTERNATIONAL

DRAIN TUBE ASSEMBLY,
CANISTER,
UNITAD

PROJECT	DRAWING	REV
630050	582	1

SCALE	WEIGHT	SHEET	DATE
N.T.S.	AS NOTED	1 OF 1	3/13/2001

Figure Withheld Under 10 CFR 2.390

NAC INTERNATIONAL

CLOSURE LID ASSEMBLY,
CANISTER,
UNITAD

PROJECT 630050			DRAWING 584	REV 2
SCALE N.T.S.	WEIGHT 7800#		SHEET 1 OF 2	6/4/2000

Figure Withheld Under 10 CFR 2.390

NAC INTERNATIONAL

CLOSURE LID ASSEMBLY,
CANISTER,
UNITAD

PROJECT 630050		DRAWING 584	REV 2
SCALE N.T.S.	WEIGHT AS NOTED	SHEET 2 OF 2 6/4/2000	

Figure Withheld Under 10 CFR 2.390

NAC INTERNATIONAL			
LIFT RING, CANISTER, (1) UNITAD			
PROJECT 630050		DRAWING 585	REV 1
SCALE N.T.S.	WEIGHT 1320#	SHEET 1 OF 1	3/13/2009

Figure Withheld Under 10 CFR 2.390

NAC INTERNATIONAL

CANISTER ASSEMBLY,
STORAGE,
UNITAD

PROJECT	DRAWING	REV
630050	586	2
SCALE N.T.S. WEIGHT AS NOTED	SHEET 1 OF 2	6/4/2009

Figure Withheld Under 10 CFR 2.390

NAC INTERNATIONAL

CANISTER ASSEMBLY,
STORAGE,
UNITAD

PROJECT 630050		DRAWING 586	REV 2
SCALE N.T.S.	WEIGHT AS NOTED	SHEET 2 OF 2 6/4/2009	

Figure Withheld Under 10 CFR 2.390

NAC INTERNATIONAL

PORT COVER,
CANISTER,
UNITAD

PROJECT 630050		DRAWING 588	REV 1
SCALE N.T.S.	WEIGHT AS NOTED	SHEET 1 OF 1	3/13/2009

Table of Contents

2.0 PRINCIPAL DESIGN CRITERIA 2-1

2.1 Spent Fuel To Be Stored 2.1-1
2.1.1 PWR Fuel Evaluation 2.1.1-1
2.1.2 BWR Fuel Evaluation 2.1.2-1
2.1.3 Site Specific Spent Fuel 2.1.3-1
2.1.3.1 Maine Yankee Site Specific Spent Fuel 2.1.3-1

2.2 Design Criteria for Environmental Conditions and Natural Phenomena 2.2-1
2.2.1 Tornado and Wind Loadings 2.2-1
2.2.1.1 Applicable Design Parameters 2.2-1
2.2.1.2 Determination of Forces on Structures 2.2-2
2.2.1.3 Tornado Missiles 2.2-2
2.2.2 Water Level (Flood) Design 2.2-3
2.2.2.1 Flood Elevations 2.2-3
2.2.2.2 Phenomena Considered in Design Load Calculations 2.2-3
2.2.2.3 Flood Force Application 2.2-3
2.2.2.4 Flood Protection 2.2-4
2.2.3 Seismic Design 2.2-4
2.2.3.1 Input Criteria 2.2-4
2.2.3.2 Seismic - System Analyses 2.2-4
2.2.4 Snow and Ice Loadings 2.2-5
2.2.5 Combined Load Criteria 2.2-6
2.2.5.1 Load Combinations and Design Strength -Vertical Concrete Cask 2.2-6
2.2.5.2 Load Combinations and Design Strength - Canister and Basket 2.2-6
2.2.5.3 Design Strength - Transfer Cask 2.2-7
2.2.6 Environmental Temperatures 2.2-7

Table of Contents (continued)

2.3 Safety Protection Systems 2.3-1
2.3.1 General 2.3-1
2.3.2 Protection by Multiple Confinement Barriers and Systems 2.3-2
2.3.2.1 Confinement Barriers and Systems 2.3-2
2.3.2.2 Cask Cooling 2.3-3
2.3.3 Protection by Equipment and Instrumentation Selection 2.3-3
2.3.3.1 Equipment 2.3-4
2.3.3.2 Protection by Instrumentation 2.3-5
2.3.4 Nuclear Criticality Safety 2.3-5
2.3.4.1 Control Methods for Prevention of Criticality 2.3-5
2.3.4.2 Error Contingency Criteria 2.3-7
2.3.4.3 Verification Analyses 2.3-7
2.3.5 Radiological Protection 2.3-7
2.3.5.1 Access Control 2.3-7
2.3.5.2 Shielding 2.3-8
2.3.5.3 Ventilation Off-Gas 2.3-8
2.3.5.4 Radiological Alarm Systems 2.3-9
2.3.6 Fire and Explosion Protection 2.3-10
2.3.6.1 Fire Protection 2.3-10
2.3.6.2 Explosion Protection 2.3-10
2.3.7 Ancillary Structures 2.3-10

2.4 Decommissioning Considerations 2.4-1

2.5 References 2.5-1

Appendix 2.A PRINCIPAL DESIGN CRITERIA
UNITAD Storage System 2.A-i

List of Figures

Figure 2.1.3.1-1 Preferential Loading Diagram for Maine Yankee Site Specific Spent Fuel 2.1.3-8

List of Tables

Table 2-1 Summary of Universal Storage System Design Criteria 2-2
Table 2.1.1-1 PWR Fuel Assembly Characteristics 2.1.1-2
Table 2.1.1-2 Minimum Cooling Time Versus Burnup/Initial Enrichment for PWR Fuel 2.1.1-3
Table 2.1.2-1 BWR Fuel Assembly Characteristics 2.1.2-2
Table 2.1.2-2 Minimum Cooling Time Versus Burnup/Initial Enrichment for for BWR Fuel 2.1.2-3
Table 2.1.3.1-1 Maine Yankee Site Specific Fuel Population 2.1.3-9
Table 2.1.3.1-2 Maine Yankee Fuel Can Design and Fabrication Specification Summary 2.1.3-10
Table 2.1.3.1-3 Major Physical Design Parameters of the Maine Yankee Fuel Can 2.1.3-11
Table 2.1.3.1-4 Loading Table for Maine Yankee Fuel without Nonfuel Material 2.1.3-12
Table 2.1.3.1-5 Loading Table for Maine Yankee Fuel Containing a CEA 2.1.3-14
Table 2.2-1 Load Combinations for the Vertical Concrete Cask 2.2-9
Table 2.2-2 Load Combinations for the Transportable Storage Canister 2.2-10
Table 2.2-3 Structural Design Criteria for Components Used in the Transportable Storage Canister 2.2-11
Table 2.3-1 Safety Classification of Universal Storage System Components 2.3-12
Table 2.4-1 Activity Concentration Summary for the Concrete Cask - PWR Design Basis Fuel (Ci/m^3) 2.4-3
Table 2.4-2 Activity Concentration Summary for the Canister - PWR Design Basis Fuel (Ci/m^3) 2.4-3
Table 2.4-3 Activity Concentration Summary for the Concrete Cask - BWR Design Basis Fuel (Ci/m^3) 2.4-4
Table 2.4-4 Activity Concentration Summary for the Canister - BWR Design Basis Fuel (Ci/m^3) 2.4-4

Appendix 2.A PRINCIPAL DESIGN CRITERIA
UNITAD Storage System

Table of Contents

Table of Contents 2.A-i
List of Tables 2.A-ii

2.A PRINCIPAL DESIGN CRITERIA 2.A-1

2.A.1 UNITAD Storage System Design Criteria 2.A.1-1

2.A.2 Spent Fuel to be Stored 2.A.2-1

2.A.3 Design Criteria for Environmental Conditions and Natural Phenomena 2.A.3-1

2.A.4 Safety Protection Systems 2.A.4-1

2.A.5 Decommissioning Considerations for the UNITAD Storage System 2.A.5-1

2.A.6 References 2.A.6-1

List of Tables

Table 2.A.2-1 PWR Fuel Assembly Characteristics 2.A.2-3
Table 2.A.2-2 ASME Code Alternatives for UNITAD Components 2.A.2-4

2.A PRINCIPAL DESIGN CRITERIA

The UNITAD Storage System is a canister-based spent fuel dry storage cask system designed in accordance with the requirements of 10 CFR 72, Subpart L, Approval of Spent Fuel Storage Casks. It is designed to store a variety of undamaged PWR spent fuel assemblies. This chapter presents the principal design criteria for the Storage System components.

THIS PAGE INTENTIONALLY LEFT BLANK

2.A.1 UNITAD Storage System Design Criteria

The design of the UNITAD Storage System ensures that the stored spent fuel is maintained subcritical in an inert environment, within allowable temperature limits, and is retrievable. The acceptance testing and maintenance program specified in the NAC-UMS® Storage System FSAR, Chapter 9 ensures that the system is, and remains, suitable for the intended purpose. The Storage System design criteria are the same as those for the NAC-UMS® Storage System presented in FSAR Table 2-1.

Proposed alternatives to ASME Code, Section III, 2004 Edition may be used when authorized by the Director of the Office of Nuclear Material Safety and Safeguards or designee. The request for such alternatives should demonstrate the following:

- The proposed alternatives would provide an acceptable level of quality and safety, or compliance with the specified requirements of ASME Code, Section III, Subsections NB and NG, 2004 Edition including 2006 Addenda, would result in hardship or unusual difficulty without a compensating increase in the level of quality and safety.
- Requests for alternatives shall be submitted in accordance with 10 CFR 72.

THIS PAGE INTENTIONALLY LEFT BLANK

2.A.2 Spent Fuel To Be Stored

The UNITAD Storage System is designed to safely store up to 21 PWR Commercial Spent Nuclear Fuel (CSNF) assemblies, contained within a Canister. The fuel assemblies are assigned to two types of PWR fuel assemblies on the basis of fuel assembly length. Refer to Chapter 1 for the fuel assembly length types. For Canister spent fuel content loads less than a full basket, empty fuel positions shall include an empty fuel cell insert.

PWR fuel assemblies having parameters as shown in Table 2.A.2-1 may be stored in the UNITAD Storage System. The minimum initial enrichment limits are also shown in Table 2.A.2-1 for PWR fuel and exclude the loading of fuel assemblies enriched to less than 1.3 wt % ^{235}U, including unenriched fuel assemblies.

PWR Fuel Evaluation

The UNITAD Storage System evaluations are based on bounding PWR fuel assembly parameters that maximize the source terms for the shielding evaluations, the reactivity for the criticality evaluations, the decay heat load for the thermal evaluations, and the fuel weight for the structural evaluations. These bounding parameters are selected from the various spent fuel assemblies that are candidates for storage in the Storage System. The bounding fuel assembly values are established based primarily on how the principal parameters are combined, and on the loading conditions (or restrictions) established for a group of fuel assemblies based on its parameters.

The limiting parameters of the PWR fuel assemblies authorized for loading in the Storage System are shown in Table 2.A.2-1. The maximum initial enrichments listed are based on a minimum soluble boron concentration of 700 ppm in the spent fuel pool water. The maximum initial enrichment authorized represents the peak fuel pellet enrichment for variably enriched PWR fuel assemblies. At the minimum specified soluble boron level, each fuel type produces reactivities below the upper subcritical limit (USL). The maximum Canister decay heat load for the storage of PWR fuel assemblies is 22 kW. The bounding thermal evaluations are based on the Westinghouse 17×17 fuel assembly. The minimum cool times are determined based on the maximum decay heat load of the contents. The fuel assemblies and source terms that produce the maximum storage cask dose rates are summarized in Table 5.A.1-3. A bounding weight of 1,700 pounds, which bounds a B&W 15×15 fuel assembly with control components inserted, has been structurally evaluated in each location of the PWR fuel basket.

As noted in Table 2.A.2-1, the evaluation of PWR fuel assemblies includes thimble plugs (flow mixers), burnable poison rod assemblies (BPRAs), control element assemblies (CEAs), and/or solid filler rods. Empty fuel rod positions are filled with a solid filler rod or a solid neutron absorber rod that displaces a volume not less than that of the original fuel rod.

Table 2.A.2-1 PWR Fuel Assembly Characteristics

Fuel Class	**14 × 14**	**14 × 14**	**15 × 15**	**15 × 15**	**15 × 15**	**16 × 16**	**17 × 17**
Fissile Isotopes	UO_2	UO_2	UO_2	UO_2	UO_2	UO_2	UO_2
Max Initial Enrichment (wt % ^{235}U)[1]	5.0	5.0	5.0	5.0	5.0	5.0	5.0
Number of Fuel Rods	176	179	204	208	216	236	264
Number of Water Holes	5	17	21	17	9	5	25
Max Assembly Average Burnup (MWd/MTU)	45,000	45,000	45,000	45,000	45,000	45,000	45,000
Min Cool Time (years)	5	5	5	5	5	5	5
Min Average Enrichment (wt % ^{235}U)	1.3	1.3	1.3	1.3	1.3	1.3	1.3
Cladding Material	Zirconium Alloy	Zirconium Alloy	Zirconium Alloy	Zirconium Alloy	Zirconium Alloy	Zirconium Alloy	Zirconium Alloy
Nonfuel Hardware	CEA	FM, BPR, CEA	FM, BPR, CEA	FM, BPR, CEA	CEA	CEA	FM, BPR, CEA
Max Weight (lb) per Storage Location[2]	1,700	1,700	1,700	1,700	1,700	1,700	1,700
Max Decay Heat (Watts) per Storage Location	1,047	1,047	1,047	1,047	1,047	1,047	1,047
Fuel Condition	Undamaged	Undamaged	Undamaged	Undamaged	Undamaged	Undamaged	Undamaged

General Notes:

1. Maximum initial enrichment taking credit for a minimum soluble boron concentration of 700 ppm in the spent fuel pool water. Represents the maximum fuel rod enrichment for variably enriched assemblies. Assemblies meeting this limit may contain a flow mixer (FM) (thimble plug), a burnable poison rod insert (BPR), a solid filler rod insert, or a control element assembly (CEA).
2. Bounding weight for analysis purposes.

Table 2.A.2-2 ASME Code Alternatives for UNITAD Components

Component	Reference ASME Code Section/Article	Code Requirement	Exception, Justification and Compensatory Measures
CANISTER	NB-1100	Statement of requirements for Code stamping of components.	CANISTER is designed and will be fabricated in accordance with ASME Code, Section III, Subsection NB to the maximum practical extent, but Code stamping is not required. The completion of an ASME Design Specification, Design Report and Overpressure Protection Report is not required.
CANISTER	NB-2000	Requirements for materials to be supplied by ASME-approved material supplier.	Materials will be supplied by NAC-approved suppliers with Certified Material Test Reports (CMTRs) in accordance to NB-2000 requirements.
CANISTER	NB-2500	Repairs to pressure-retaining material from which a defect(s) has been removed are to be examined by magnetic particle or dye penetrant methods. If the depth of the repair exceeds the lesser of 3/8-inch or 10% of the section thickness, examination is to be by radiography.	In accordance with ASME Code Case N-595-4, a loaded CANISTER shell examination of a weld repair of material within 1/2-inch of a closure weld may be done by progressive magnetic particle or dye penetrant examination methods for each weld layer ≤1/4-inch and final surface.
CANISTER Shield Lid and Structural Lid Welds (Closure Lid and Closure Ring Welds for UNITAD STORAGE SYSTEM)	NB-4243	Full penetration welds required for Category C joints (flat head to main shell per NB-3352.3).	Shield lid and structural lid, or closure lid and closure ring welds for the UNITAD SYSTEM, to CANISTER shell welds are not full penetration welds. These field welds are performed independently to provide a redundant closure.
CANISTER Structural Lid Weld (Not applicable for UNITAD STORAGE SYSTEM)	NB-4421	Requires removal of backing ring.	Structural lid to CANISTER shell weld uses a backing ring that is not removed. The backing ring permits completion of the groove weld; it is not considered in any analyses; and it has no detrimental effect on CANISTER function.

Table 2.A.2-2 ASME Code Alternatives for UNITAD Components (continued)

Component	Reference ASME Code Section/Article	Code Requirement	Exception, Justification and Compensatory Measures
CANISTER Vent Port Cover and Drain Port Cover to Shield Lid (Port Cover Plates to Closure Lid for UNITAD STORAGE SYSTEM) Welds; Shield Lid to Shell Weld; and Closure Ring to Shell and Closure Lid Welds	NB-5230	Radiographic (RT) or ultrasonic (UT) examination required.	Root and final surface liquid penetrant examination to be performed per ASME Code Section V, Article 6, with acceptance in accordance with ASME Code, Section III, NB-5350. If port cover, port cover plate and closure ring welds are completed in a single pass, only final surface examinations are required. Inner port cover plates of the UNITAD STSTEM CANISTER are leak tested to verify the absence of helium leakage as described in Chapter 9.
CANISTER Structural Lid to Shell Weld (Closure Lid to Shell Weld for UNITAD STORAGE SYSTEM)	NB-5230	Radiographic (RT) or ultrasonic (UT) examination required.	The CANISTER structural lid to CANISTER shell closure weld (or Closure Lid to CANISTER shell closure weld) is performed in the field following fuel assembly loading. The structural lid-to-shell weld (or closure lid-to-shell weld) will be verified by either ultrasonic (UT) or progressive liquid penetrant (PT) examination. If progressive PT examination is used, at a minimum, it must include the root and final layers and each approximately 3/8 inch of weld depth for the Structural Lid to Shell Weld (or root, mid-plane and final weld layers for the Closure Lid to Shell Weld for the UNITAD SYSTEM CANISTER). If UT examination is used, it will be followed by a final surface PT examination. For either UT or PT examination, the maximum, undetectable flaw size is demonstrated to be smaller than the critical flaw size. The critical flaw size is determined in accordance with ASME Code, Section XI methods. The examination of the weld will be performed by qualified personnel per ASME Code Section V, Articles 5 (UT) and 6 (PT) with acceptance per ASME Code Section III, NB-5332 (UT), and NB-5350 for (PT).

Table 2.A.2-2 ASME Code Alternatives for UNITAD Components (continued)

Component	Reference ASME Code Section/Article	Code Requirement	Exception, Justification and Compensatory Measures
CANISTER Vessel and Shield Lid (Closure Lid to Shell Weld for UNITAD STORAGE SYSTEM)	NB-6111	All completed pressure retaining systems shall be pressure tested.	The CANISTER shield lid, or closure lid, to shell weld is performed in the field following fuel assembly loading. The CANISTER is then pneumatically (air/nitrogen/ helium-over-water) pressure tested as defined in Chapter 9 (for Shield Lid to Shell Weld) or hydrostatically tested (for Closure Lid to Shell Weld) as described and specified in Chapters 8 and 9. The Shield Lid-to-Shell Weld is also leak tested to the leak-tight criteria of ANSI N14.5. The Closure Lid-to-Shell Weld and UNITAD SYSTEM CANISTER are compliant with ISG-15 and ISG-18 requirements and no leakage test of the Closure Lid-to-Shell Weld is required.
CANISTER Vessel	NB-7000	Vessels are required to have overpressure protection.	No overpressure protection is provided. The function of the CANISTER is to confine radioactive contents under normal, off-normal, and accident conditions of storage. The CANISTER vessel is designed to withstand a maximum internal pressure considering 100% fuel rod failure and maximum accident temperatures.
CANISTER Vessel	NB-8000	States requirements for nameplates, stamping and reports per NCA-8000.	The NAC-UMS® SYSTEM is marked and identified in accordance with 10 CFR 72 requirements. Code stamping is not required. The QA data package will be in accordance with NAC's approved QA program. The completion of an ASME Design Specification, Design Report and Overpressure Protection Report is not required.

Table 2.A.2-2 ASME Code Alternatives for UNITAD Components (continued)

Component	Reference ASME Code Section/Article	Code Requirement	Exception, Justification and Compensatory Measures
CANISTER Basket Assembly	NG-2000	Requires materials to be supplied by ASME approved material supplier.	Materials to be supplied by NAC-approved suppliers with CMTRs in accordance with NG-2000 requirements.
CANISTER Basket Assembly	NG-8000	States requirements for nameplates, stamping and reports per NCA-8000.	The NAC-UMS® SYSTEM will be marked and identified in accordance with 10 CFR 72 requirements. No Code stamping is required. The CANISTER basket data package will be in accordance with NAC's approved QA program.
CANISTER Vessel and Basket Assembly Material	NB-2130/ NG-2130	States requirements for certification of material organizations and materials to NCA-3861 and NCA-3862, respectively.	The NAC-UMS® CANISTER and Basket Assembly component materials are procured in accordance with the specifications for materials in ASME Code Section II with Certified Material Test Reports. The component materials will be obtained from NAC approved Suppliers in accordance with NAC's approved QA program.

THIS PAGE INTENTIONALLY LEFT BLANK

2.A.3 Design Criteria for Environmental Conditions and Natural Phenomena

The design criteria for site environmental conditions and natural phenomena applied in the design basis analyses of the UNITAD Storage System are those presented in the NAC-UMS® Storage System FSAR, Section 2.2. Analyses to demonstrate that the design basis system meets the design criteria defined in this section are presented in the appropriate chapters.

The use of the UNITAD Storage System at a specific site requires that the site either meet the design criteria of this section or be separately evaluated against the site-specific conditions to ensure the acceptable performance of the system.

THIS PAGE INTENTIONALLY LEFT BLANK

2.A.4 Safety Protection Systems

The UNITAD Storage System is designed for safe, long-term storage of commercial spent nuclear fuel. The Storage System relies upon passive systems to ensure the protection of public health and safety, except in the case of fire or explosion. The system will withstand all of the evaluated normal conditions and the off-normal and postulated accident events without release of radioactive material or excessive radiation exposure to workers or the general public. As discussed in the NAC-UMS® Storage System FSAR, Section 2.3.6, fire and explosion events are effectively precluded by site administrative controls that prevent the introduction of flammable and explosive materials. The use of passive systems provides protection from mechanical or equipment failure.

The general confinement design considerations for the UNITAD Storage System are as described in FSAR Section 2.3.1 for the NAC-UMS® Storage System.

Protection by Multiple Confinement Barriers and Systems

The UNITAD Storage System confinement barriers and systems are effectively the same as those described in FSAR Section 2.3.2 for the NAC-UMS® Storage System, except that the UNITAD Canister has a single closure lid rather than the NAC-UMS® shield lid and structural lid combination.

Protection by Equipment and Instrumentation Selection

The UNITAD Storage System protection by equipment and instrumentation is as described in FSAR Section 2.3.3 for the NAC-UMS® Storage System.

Nuclear Criticality Safety

The UNITAD Storage System control methods for criticality safety are as described for the NAC-UMS® Storage System in FSAR Section 2.3.4, except that there are 21 fuel tubes constructed of four interlocking sides of borated stainless steel (A887-89, Grade A) with boron loading of 1.1 to 1.2 wt %.

Radiological Protection

Radiological protection provided by the UNITAD Storage System is essentially the same as that described in FSAR Section 2.3.5 for the NAC-UMS® Storage System.

Fire and Explosion Protection

The fire and explosion protection provided by the UNITAD Storage System is effectively the same as that described in FSAR Section 2.3.6 for the NAC-UMS® Storage System.

Ancillary Structures

Required ancillary structures for the operation of the UNITAD Storage System are the same as, or similar to, that described for the NAC-UMS® Storage System in FSAR Section 2.3.7.

2.A.5 Decommissioning Considerations for the UNITAD Storage System

The decommissioning considerations for the UNITAD Storage System are essentially the same as those described in the NAC-UMS® Storage System FSAR, Section 2.4, except that only PWR fuel is considered.

THIS PAGE INTENTIONALLY LEFT BLANK

2.A.6 References

The UNITAD Storage System references are the same as those for the NAC-UMS® Storage System in FSAR Section 2.5, except that ASME Boiler and Pressure Vessel Code, 2004 Edition, 2006 Addenda, is used.

THIS PAGE INTENTIONALLY LEFT BLANK

Table of Contents

3.0 STRUCTURAL EVALUATION 3.1-1

3.1 Structural Design 3.1-1
- 3.1.1 Discussion 3.1-2
- 3.1.2 Design Criteria 3.1-6

3.2 Weights and Centers of Gravity 3.2-1

3.3 Mechanical Properties of Materials 3.3-1
- 3.3.1 Primary Component Materials 3.3-1
- 3.3.2 Fracture Toughness Considerations 3.3-16

3.4 General Standards 3.4.1-1
- 3.4.1 Chemical and Galvanic Reactions 3.4.1-1
  - 3.4.1.1 Component Operating Environment 3.4.1-1
  - 3.4.1.2 Component Material Categories 3.4.1-2
  - 3.4.1.3 General Effects of Identified Reactions 3.4.1-12
  - 3.4.1.4 Adequacy of the Canister Operating Procedures 3.4.1-12
  - 3.4.1.5 Effects of Reaction Products 3.4.1-12
- 3.4.2 Positive Closure 3.4.2-1
- 3.4.3 Lifting Devices 3.4.3-1
  - 3.4.3.1 Vertical Concrete Cask Lift Evaluation 3.4.3-5
  - 3.4.3.2 Canister Lift 3.4.3-28
  - 3.4.3.3 Standard Transfer Cask Lift 3.4.3-35
  - 3.4.3.4 Advanced Transfer Cask Lift 3.4.3-66
- 3.4.4 Normal Operating Conditions Analysis 3.4.4-1
  - 3.4.4.1 Canister and Basket Analyses 3.4.4-1
  - 3.4.4.2 Vertical Concrete Cask Analyses 3.4.4-63
- 3.4.5 Cold 3.4.5-1

3.5 Fuel Rods 3.5-1

Table of Contents (continued)

3.6 Structural Evaluation of Site Specific Spent Fuel 3.6-1
3.6.1 Structural Evaluation of Maine Yankee Site Specific Spent Fuel for Normal Operating Conditions 3.6-1
3.6.1.1 Maine Yankee Undamaged Spent Fuel 3.6-1
3.6.1.2 Maine Yankee Damaged Spent Fuel 3.6-2

3.7 References 3.7-1

3.8 Carbon Steel Coatings Technical Data 3.8-1
3.8.1 Carboline 890 ..... 3.8-2
3.8.2 Keeler & Long E-Series Epoxy Enamel 3.8-4
3.8.3 Description of Electroless Nickel Coating 3.8-8
3.8.4 Keeler & Long Kolor-Poxy Primer No. 3200 ..... 3.8-12
3.8.5 Acrythane Enamel Y-1 Series Top Coating 3.8-14

Appendix 3.A STRUCTURAL EVALUATION UNITAD Storage System 3.A-i

List of Figures

Figure 3.1-1 Principal Components of the Universal Storage System 3.1-7
Figure 3.4.2-1 Universal Storage System Welded Canister Closure 3.4.2-2
Figure 3.4.3-1 Standard Transfer Cask Lifting Trunnion 3.4.3-3
Figure 3.4.3-2 Canister Hoist Ring Design 3.4.3-4
Figure 3.4.3.1-1 Base Weldment Finite Element Model 3.4.3-27
Figure 3.4.3.2-1 Canister Lift Finite Element Model 3.4.3-33
Figure 3.4.3.2-2 Canister Lift Model Stress Intensity Contours (psi) 3.4.3-34
Figure 3.4.3.3-1 Finite Element Model for Standard Transfer Cask Trunnion and Shells 3.4.3-55
Figure 3.4.3.3-2 Node Locations for Standard Transfer Cask Outer Shell Adjacent to Trunnion 3.4.3-56
Figure 3.4.3.3-3 Node Locations for Standard Transfer Cask Inner Shell Adjacent to Trunnion 3.4.3-57
Figure 3.4.3.3-4 Stress Intensity Contours (psi) for Standard Transfer Cask Outer Shell Element Top Surface 3.4.3-58
Figure 3.4.3.3-5 Stress Intensity Contours (psi) for Standard Transfer Cask Outer Shell Element Bottom Surface 3.4.3-59
Figure 3.4.3.3-6 Stress Intensity Contours (psi) for Standard Transfer Cask Inner Shell Element Top Surface 3.4.3-60
Figure 3.4.3.3-7 Stress Intensity Contours (psi) for Standard Transfer Cask Inner Shell Element Bottom Surface 3.4.3-61
Figure 3.4.3.4-1 Advanced Transfer Cask Finite Element Model 3.4.3-83
Figure 3.4.3.4-2 Node Locations for Advanced Transfer Cask Outer Shell Adjacent to Trunnion 3.4.3-84
Figure 3.4.3.4-3 Node Locations for Advanced Transfer Cask Inner Shell Adjacent to Trunnion 3.4.3-85
Figure 3.4.3.4-4 Node Locations for Advanced Transfer Cask Stiffener Plate Above Trunnion 3.4.3-86
Figure 3.4.3.4-5 Stress Intensity Contours (psi) for Advanced Transfer Cask Outer Shell Element Top Surface 3.4.3-87
Figure 3.4.3.4-6 Stress Intensity Contours (psi) for Advanced Transfer Cask Outer Shell Element Bottom Surface 3.4.3-88

List of Figures (continued)

Figure 3.4.3.4-7 Stress Intensity Contours (psi) for Advanced Transfer Cask Inner Shell Element Top Surface 3.4.3-89
Figure 3.4.3.4-8 Stress Intensity Contours (psi) for Advanced Transfer Cask Inner Shell Element Bottom Surface 3.4.3-90
Figure 3.4.3.4-9 Stress Intensity Contours (psi) for Advanced Transfer Cask Stiffener Plate Element Top Surface 3.4.3-91
Figure 3.4.3.4-10 Stress Intensity Contours (psi) for Advanced Transfer Cask Stiffener Plate Element Bottom Surface 3.4.3-92
Figure 3.4.4.1-1 Canister Composite Finite Element Model 3.4.4-20
Figure 3.4.4.1-2 Weld Regions of Canister Composite Finite Element Model at Structural and Shield Lids 3.4.4-21
Figure 3.4.4.1-3 Bottom Plate of the Canister Composite Finite Element Model 3.4.4-22
Figure 3.4.4.1-4 Locations for Section Stresses in the Canister Composite Finite Element Model 3.4.4-23
Figure 3.4.4.1-5 BWR Fuel Assembly Basket Showing Typical Fuel Basket Components 3.4.4-24
Figure 3.4.4.1-6 PWR Fuel Basket Support Disk Finite Element Model 3.4.4-25
Figure 3.4.4.1-7 PWR Fuel Basket Support Disk Sections for Stress Evaluation (Left Half) 3.4.4-26
Figure 3.4.4.1-8 PWR Fuel Basket Support Disk Sections for Stress Evaluation (Right Half) 3.4.4-27
Figure 3.4.4.1-9 PWR Class 3 Fuel Tube Configuration 3.4.4-28
Figure 3.4.4.1-10 PWR Top Weldment Plate Finite Element Model 3.4.4-29
Figure 3.4.4.1-11 PWR Bottom Weldment Plate Finite Element Model 3.4.4-30
Figure 3.4.4.1-12 BWR Fuel Basket Support Disk Finite Element Model 3.4.4-31
Figure 3.4.4.1-13 BWR Fuel Basket Support Disk Sections for Stress Evaluation (Quadrant I) 3.4.4-32
Figure 3.4.4.1-14 BWR Fuel Basket Support Disk Sections for Stress Evaluation (Quadrant II) 3.4.4-33
Figure 3.4.4.1-15 BWR Fuel Basket Support Disk Sections for Stress Evaluation (Quadrant III) 3.4.4-34
Figure 3.4.4.1-16 BWR Fuel Basket Support Disk Sections for Stress Evaluation (Quadrant IV) 3.4.4-35

List of Figures (continued)

Figure 3.4.4.1-17 BWR Class 5 Fuel Tube Configuration 3.4.4-36
Figure 3.4.4.1-18 BWR Top Weldment Plate Finite Element Model 3.4.4-37
Figure 3.4.4.1-19 BWR Bottom Weldment Plate Finite Element Model 3.4.4-38
Figure 3.4.4.2-1 Concrete Cask Thermal Stress Model 3.4.4-70
Figure 3.4.4.2-2 Concrete Cask Thermal Stress Model - Vertical and Horizontal Rebar Detail 3.4.4-71
Figure 3.4.4.2-3 Concrete Cask Thermal Stress Model Boundary Conditions 3.4.4-72
Figure 3.4.4.2-4 Concrete Cask Thermal Model Axial Stress Evaluation Locations 3.4.4-73
Figure 3.4.4.2-5 Concrete Cask Thermal Model Circumferential Stress Evaluation Locations 3.4.4-74

List of Tables

Table 3.2-1 Universal Storage System Weights and CGs – PWR Configuration 3.2-2
Table 3.2-2 Universal Storage System Weights and CGs – BWR Configuration 3.2-3
Table 3.2-3 Calculated Under-Hook Weights for the Standard Transfer Cask 3.2-4
Table 3.3-1 Mechanical Properties of SA-240 and A-240, Type 304 Stainless Steel ... 3.3-3
Table 3.3-2 Mechanical Properties of SA-479, Type 304 Stainless Steel 3.3-4
Table 3.3-3 Mechanical Properties of SA-240, Type 304L Stainless Steel 3.3-5
Table 3.3-4 Mechanical Properties of SA-564 and SA-693, Type 630, 17-4 PH Stainless Steel 3.3-6
Table 3.3-5 Mechanical Properties of A-36 Carbon Steel 3.3-7
Table 3.3-6 Mechanical Properties of A615, Grade 60, A615, Grade 75 and A-706 Reinforcing Steel 3.3-7
Table 3.3-7 Mechanical Properties of SA-533, Type B, Class 2 Carbon Steel 3.3-8
Table 3.3-8 Mechanical Properties of A-588, Type A or B Low Alloy Steel 3.3-9
Table 3.3-9 Mechanical Properties of SA-350/A-350, Grade LF 2, Class 1 Low Alloy Steel 3.3-10
Table 3.3-10 Mechanical Properties of SA-193, Grade B6, High Alloy Steel Bolting Material 3.3-11
Table 3.3-11 Mechanical Properties of 6061-T651 Aluminum Alloy 3.3-12
Table 3.3-12 Mechanical Properties of Concrete 3.3-13
Table 3.3-13 Mechanical Properties of NS-4-FR and NS-3 ..... 3.3-14
Table 3.3-14 Mechanical Properties of SA-516, Grade 70 Carbon Steel 3.3-15
Table 3.4.3.3-1 Top 30 Stresses for Standard Transfer Cask Outer Shell Element Top Surface 3.4.3-62
Table 3.4.3.3-2 Top 30 Stresses for Standard Transfer Cask Outer Shell Element Bottom Surface 3.4.3-63
Table 3.4.3.3-3 Top 30 Stresses for Standard Transfer Cask Inner Shell Element Top Surface 3.4.3-64
Table 3.4.3.3-4 Top 30 Stresses for Standard Transfer Cask Inner Shell Element Bottom Surface 3.4.3-65

List of Tables (continued)

Table 3.4.3.4-1 Top 30 Stresses for Advanced Transfer Cask Outer Shell Element Top Surface 3.4.3-93
Table 3.4.3.4-2 Top 30 Stresses for Advanced Transfer Cask Outer Shell Element Bottom Surface 3.4.3-94
Table 3.4.3.4-3 Top 30 Stresses for Advanced Transfer Cask Inner Shell Element Top Surface 3.4.3-95
Table 3.4.3.4-4 Top 30 Stresses for Advanced Transfer Cask Inner Shell Element Bottom Surface 3.4.3-96
Table 3.4.3.4-5 Top 30 Stresses for Advanced Transfer Cask Stiffener Plate Element Top Surface 3.4.3-97
Table 3.4.3.4-6 Top 30 Stresses for Advanced Transfer Cask Stiffener Plate Element Bottom Surface 3.4.3-98
Table 3.4.4.1-1 Canister Secondary (Thermal) Stresses (ksi). 3.4.4-39
Table 3.4.4.1-2 Canister Dead Weight Primary Membrane (P_m) Stresses (ksi), $P_{internal}$ = 0 psig 3.4.4-40
Table 3.4.4.1-3 Canister Dead Weight Primary Membrane plus Bending ($P_m + P_b$) Stresses (ksi), $P_{internal}$ = 0 psig 3.4.4-41
Table 3.4.4.1-4 Canister Normal Handling With No Internal Pressure Primary Membrane (P_m) Stresses, (ksi) 3.4.4-42
Table 3.4.4.1-5 Canister Normal Handling With No Internal Pressure Primary Membrane plus Bending ($P_m + P_b$) Stresses (ksi) 3.4.4-43
Table 3.4.4.1-6 Summary of Canister Normal Handling plus Normal Internal Pressure Primary Membrane (P_m) Stresses (ksi). 3.4.4-44
Table 3.4.4.1-7 Summary of Canister Normal Handling, Plus Normal Pressure Primary Membrane plus Bending ($P_m + P_b$) Stresses (ksi). 3.4.4-45
Table 3.4.4.1-8 Summary of Maximum Canister Normal Handling, plus Normal Pressure, plus Secondary (P + Q) Stresses (ksi) 3.4.4-46
Table 3.4.4.1-9 Canister Normal Internal Pressure Primary Membrane (P_m) Stresses (ksi) 3.4.4-47
Table 3.4.4.1-10 Canister Normal Internal Pressure Primary Membrane plus Bending ($P_m + P_b$) Stresses (ksi) 3.4.4-48
Table 3.4.4.1-11 Listing of Sections for Stress Evaluation of PWR Support Disk 3.4.4-49
Table 3.4.4.1-12 $P_m + P_b$ Stresses for PWR Support Disk - Normal Conditions (ksi)..... 3.4.4-52

List of Tables (continued)

Table 3.4.4.1-13 $P_m + P_b + Q$ Stresses for the PWR Support Disk - Normal Conditions (ksi) 3.4.4-53
Table 3.4.4.1-14 Listing of Sections for Stress Evaluation of BWR Support Disk 3.4.4-54
Table 3.4.4.1-15 $P_m + P_b$ Stresses for BWR Support Disk - Normal Conditions (ksi) 3.4.4-60
Table 3.4.4.1-16 $P_m + P_b + Q$ Stresses for BWR Support Disk - Normal Conditions (ksi) 3.4.4-61
Table 3.4.4.1-17 Summary of Maximum Stresses for PWR and BWR Fuel Basket Weldments - Normal Conditions (ksi) 3.4.4-62
Table 3.4.4.2-1 Summary of Maximum Stresses for Vertical Concrete Cask Load Combinations 3.4.4-75
Table 3.4.4.2-2 Maximum Concrete and Reinforcing Bar Stresses 3.4.4-76
Table 3.4.4.2-3 Concrete Cask Average Concrete Axial Tensile Stresses 3.4.4-77
Table 3.4.4.2-4 Concrete Cask Average Concrete Hoop Tensile Stresses 3.4.4-77

Appendix 3.A STRUCTURAL EVALUATION UNITAD Storage System

Table of Contents 3.A-i
List of Figures 3.A-ii
List of Tables 3.A-iii

Table of Contents

3.A STRUCTURAL EVALUATION 3.A-1

3.A.1 Structural Design of UNITAD Storage System 3.A.1-1
3.A.1.1 Discussion 3.A.1-1
3.A.1.2 Design Criteria 3.A.1-4

3.A.2 Weights and Centers of Gravity 3.A.2-1

3.A.3 Mechanical Properties of Materials 3.A.3-1
3.A.3.1 Primary Component Materials 3.A.3-1
3.A.3.2 Fracture Toughness Considerations 3.A.3-2

3.A.4 General Standards for Casks 3.A.4-1
3.A.4.1 Chemical and Galvanic Reactions 3.A.4-1
3.A.4.2 Positive Closure 3.A.4-1
3.A.4.3 Lifting Devices 3.A.4-1

3.A.5 Structural Evaluation of the UNITAD Storage System for Normal Conditions of Storage 3.A.5-1
3.A.5.1 Canister and Basket Analyses 3.A.5-1
3.A.5.2 Vertical Concrete Cask Analyses 3.A.5-36

3.A.6 Cold 3.A.6-1

3.A.7 Fuel Rods 3.A.7-1

3.A.8 References 3.A.8-1

3.A.9 Coatings Specifications 3.A.9-1

List of Figures

Figure 3.A.4-1 Canister Lift Half-Symmetry Finite Element Model 3.A.4-18
Figure 3.A.4-2 Base Weldment Finite Element Model 3.A.4-19
Figure 3.A.4-3 Nelson Studs – Base Weldment Finite Element Model 3.A.4-20
Figure 3.A.4-4 Gap Elements, View 1 – Base Weldment Finite Element Model 3.A.4-21
Figure 3.A.4-5 Gap Elements, View 2 – Base Weldment Finite Element Model 3.A.4-22
Figure 3.A.4.3.3-1 Finite Element Model for the Vertical Lifting Analysis 3.A.4-49
Figure 3.A.4.3.3-2 Definition of Stress Cross-Sections on the Top Ring 3.A.4-50
Figure 3.A.4.3.3-3 Retaining Block ANSYS Model for Evaluation of Inadvertent Canister Lift 3.A.4-51
Figure 3.A.4.3.3-4 Linearized Section Stresses of Retaining Block 3.A.4-52
Figure 3.A.5-1 Canister Finite Element Model for the Storage Evaluation 3.A.5-14
Figure 3.A.5-2 Location of Sections for Linearized Stresses for the Storage Evaluation 3.A.5-15
Figure 3.A.5-3 Basket Support Disk Finite Element Model 3.A.5-16
Figure 3.A.5-4 Basket Support Disk Sections for Stress Evaluations 3.A.5-17
Figure 3.A.5-5 VCC Reinforcing Bar Arrangement 3.A.5-48
Figure 3.A.5-6 VCC Axisymmetric Model Geometry 3.A.5-49
Figure 3.A.5-7 Radial Stress Distribution through VCC Wall 3.A.5-50

List of Tables

Table 3.A.2-1 UNITAD Storage System Weights and CGs 3.A.2-2
Table 3.A.2-2 Under-Hook Weights for the Transfer Cask 3.A.2-3
Table 3.A.3-1 Mechanical Properties of A-887-89, Grade A, Borated Stainless Steel 3.A.3-3
Table 3.A.4-1 Base Weldment Stresses, P_m, ksi 3.A.4-23
Table 3.A.4-2 Base Weldment Stresses, $P_m + P_b$, ksi 3.A.4-24
Table 3.A.4-3 Base Weldment, Weld Forces, lbs 3.A.4-25
Table 3.A.4-4 Nelson Stud Loads 3.A.4-26
Table 3.A.4.3.3-1 Primary Stress Intensities in the Trunnions and the Top Ring 3.A.4-53
Table 3.A.4.3.3-2 Primary Membrane Plus Bending Stress Intensities in the Outer Shell, the Inner Shell and the Bottom Ring 3.A.4-53
Table 3.A.5-1 Canister Secondary (Thermal) Stresses (ksi) 3.A.5-18
Table 3.A.5-2 Canister Deadweight Primary Membrane (P_m) Stresses (ksi), $P_{internal}$ = 0 psig 3.A.5-19
Table 3.A.5-3 Canister Deadweight Primary Membrane plus Bending ($P_m + P_b$) Stresses (ksi), $P_{internal}$ = 0 psig 3.A.5-20
Table 3.A.5-4 Canister Normal Internal Pressure Primary Membrane (P_m) Stresses (ksi) 3.A.5-21
Table 3.A.5-5 Canister Normal Internal Pressure Primary Membrane plus Bending ($P_m + P_b$) Stresses (ksi) 3.A.5-22
Table 3.A.5-6 Canister Normal Handling with No Internal Pressure Primary Membrane (Pm) Stresses (ksi) 3.A.5-23
Table 3.A.5-7 Canister Normal Handling with No Internal Pressure Primary Membrane plus Bending ($P_m + P_b$) Stresses (ksi) 3.A.5-24
Table 3.A.5-8 Summary of Canister Normal Handling plus Normal Internal Pressure Primary Membrane (P_m) Stresses (psi) 3.A.5-25
Table 3.A.5-9 Summary of Canister Normal Handlinig plus Normal Pressure Primary Membrane plus Bending ($P_m + P_b$) Stresses (ksi) 3.A.5-26
Table 3.A.5-10 Summary of Canister Deadweight plus Normal Pressure Primary Membrane (Pm) Stresses (ksi) 3.A.5-27
Table 3.A.5-11 Summary of Canister Deadweight plus Normal Pressure Primary Membrane plus Bending ($P_m + P_b$) Stresses (ksi) 3.A.5-28
Table 3.A.5-12 Summary of Maximum Canister Normal Pressure, plus Deadweight, plus Secondary (P + Q) Stresses (ksi) 3.A.5-29

List of Tables (continued)

Table 3.A.5-13 Summary of Maximum Canister Normal Handling plus Normal Pressure, plus Secondary (P + Q) Stresses (ksi) 3.A.5-30
Table 3.A.5-14 Listing of Sections for Stress Evaluation of Support Disk 3.A.5-31
Table 3.A.5-15 Pm + Pb Stresses for Support Disk, Normal Handling (ksi) 3.A.5-35
Table 3.A.5-16 Pm + Pb + Q Stresses for Support Disk, Normal Handling (ksi) 3.A.5-35
Table 3.A.5-17 Load Combinations for Concrete Cask 3.A.5-52
Table 3.A.5-18 Summary of Maximum Stresses for VCC Load Combinations 3.A.5-53
Table 3.A.5-19 Maximum Concrete Stresses 3.A.5-55
Table 3.A.5-20 Maximum Reinforcing Bar Loads 3.A.5-55

3.A STRUCTURAL EVALUATION

This chapter describes the design and analysis of the principal structural components of the UNITAD Storage System under normal operating conditions. It demonstrates that the Storage System meets the structural requirements for confinement of contents, criticality control, radiological shielding and contents retrievability required by 10 CFR 72 for the design basis normal operating conditions. Off-normal and accident events are evaluated in Chapter 11.0 of the NAC-UMS® Storage System FSAR.

THIS PAGE INTENTIONALLY LEFT BLANK

3.A.1 Structural Design of UNITAD Storage System

The structural design of the UNITAD Storage System is very similar to that of the NAC-UMS®, except that only PWR fuel is considered and the components are provided in just two different lengths for that fuel type.

3.A.1.1 Discussion

The Canister is designed to be transported in the UNITAD Transport System and the Canister diameter is the same for both of the component lengths. The outside diameter of the Vertical Concrete Cask (Concrete Cask) is established by the shielding requirement for the design basis fuel used for the shielding evaluation. The shielding required for the design basis fuel is conservatively applied to both of the Concrete Cask lengths.

Vertical Concrete Cask

The Vertical Concrete Cask is a reinforced concrete cylinder with an outside diameter of 136 inches and an overall height (including the lid) of either 228.1 inches or 218.1 inches, depending upon the canister type and configuration. The internal cavity of the Concrete Cask is lined by a 3.0-inch thick carbon steel liner shell having an inside diameter of 74 inches. The 3-inch standoffs on the inside diameter of the inner shell limit the available contents diameter to less than 68 inches. The liner shell thickness is primarily determined by radiation shielding requirements, but is also related to the need to establish a practical limit for the diameter of the concrete shell. The concrete shell is constructed using Type II Portland Cement, and has a nominal density of 145 lb/ft^3 and a nominal compressive strength of 4,000 psi. The inner and outer rebar assemblies are formed by vertical hook bars and horizontal hoop bars.

A ventilation air-flow path is formed by inlets at the bottom of the Concrete Cask, the annular space between the cask inner shell and the Canister, and outlets near the top of the cask. The passive ventilation system operates by natural convection as cool air enters the bottom inlets, is heated by the canister, and exits from the top outlets. The Concrete Cask lid assembly, consisting of 0.75 inch of carbon steel and 5.8 inches of concrete, is installed in the Concrete Cask cavity above the Canister. The lid is bolted in place and provides a cover to protect the Canister from adverse environmental conditions and postulated tornado-driven missiles. The lid provides the shielding required to reduce the skyshine radiation.

Canister

The Canister consists of a cylindrical shell assembly closed at its top end by a closure lid. The canister forms the confinement boundary for the basket assembly that contains the PWR spent fuel. Two Canister types accommodate the PWR fuel assemblies. The Canister is fabricated from Type 304 stainless steel. The Canister closure lid is 8-inch thick, SA-240 Type 304 stainless steel. SA-182 Type 304 stainless steel may be substituted for the SA-240 Type 304 stainless steel used in the closure lid, provided that the SA-182 material has yield and ultimate strengths equal to, or greater than, those of the SA-240 material. The closure lid is welded to the Canister shell to close the Canister. The closure ring is a 3/4-inch Type 304 stainless steel bar positioned on top of the closure lid at its outer diameter and welded to the Canister shell after the closure lid is welded in place. The closure ring provides a welded, redundant closure. Removable lifting fixtures, installed in the closure lid, are used to lift and lower the loaded Canister. The closure lid is supported by lifting lugs above the fuel basket prior to welding. The bottom of the Canister is a 2-inch thick SA-240, Type 304 stainless steel plate that is welded to the Canister shell. The Canister is also described in Section 1.A.2.1.1.

PWR Fuel Basket

The fuel basket assembly provides for up to 21 PWR fuel assemblies. The PWR basket is comprised of Type 304 stainless steel support disks, Type 6061-T651 aluminum alloy heat transfer disks, and A887-89, Grade A, borated stainless steel fuel tubes. The remaining structural components are Type 304 stainless steel. The PWR basket assembly is more fully described in Section 1.A.2.1.2.

The fuel basket support disks, heat transfer disks and fuel tubes, together with the top and bottom weldments, are positioned by tie rods (with spacers and washers) that extend the length of the basket and hold the assembly together. The support disks provide structural support for the fuel tubes. They also help to remove heat from the fuel tubes. The heat transfer disks provide the primary heat removal capability and are not considered to be structural components. The heat transfer disks are sized so that differential thermal expansion does not result in disk contact with the Canister shell. The number of heat transfer disks and support disks varies depending upon the length of the fuel to be confined in the basket. The fuel tubes house the spent fuel assemblies. The top and bottom weldments provide longitudinal support for the fuel tubes. The fuel tubes are fabricated as four interlocking plates of A887-89, Grade A, borated stainless steel. No structural credit is taken for the presence of the fuel tubes in the basket assembly analysis.

The PWR assembly fuel tubes have a nominal inside dimension of 9-inches square and a wall thickness of 0.44 inch.

As mentioned above, two lengths of Canisters are provided for the storage of PWR spent fuel. The analysis is based on the identification of bounding conditions and the application of those conditions to determine the maximum stresses.

The Canister is designed to be transported in the UNITAD Transport System. Transport conditions establish the design basis loading, except for lifting, because the hypothetical accident transport conditions produce higher stresses in the Canister and basket than do the design basis storage conditions. Consequently, the Canister and basket design is conservative with respect to storage conditions.

Transfer Cask

The Transfer Cask, with its lifting yoke, is primarily a lifting device used to move the Canister. It provides biological shielding when it contains a loaded Canister. The Transfer Cask is a heavy lifting device that is designed, fabricated and load-tested to the requirements of NUREG-0612 and ANSI N14.6. The Transfer Cask design incorporates a set of three retaining assemblies that are positioned to prevent a loaded Canister from being inadvertently lifted through the top of the Transfer Cask. The Transfer Cask has retractable bottom shield doors. During loading operations, the doors are closed and secured by stops so they cannot inadvertently open. During unloading, the doors are retracted using hydraulic cylinders to allow the Canister to be lowered into the storage or transport cask. The principal design parameters of the Transfer Cask are shown in Table 1.A.2-1.

The Transfer Cask is provided in two different lengths to accommodate the two Canister lengths. The Transfer Cask is used for the vertical transfer of the Canister between workstations and the Concrete Cask or Transport Cask. It incorporates a multiwall (steel/lead/NS-4-FR/steel) design to provide radiation shielding.

Component Evaluation

The following components are evaluated in this chapter:

- Canister lifting devices
- Canister shell, bottom and closure lid
- Canister lifting lugs

- Fuel basket assembly
- Transfer Cask trunnions, shells, retaining assemblies, bottom doors and support rails,
- Vertical Concrete Cask body
- Concrete Cask steel components (reinforcement, inner shell, lid, bottom plate, bottom, etc.).

Other UNITAD Storage System components shown on the UNITAD System drawings in Chapter 1 are included as loads in the evaluation of the components listed above, as appropriate.

The structural evaluations in this chapter demonstrate that the UNITAD Storage System components meet their structural design criteria and are capable of safely storing the design basis PWR spent fuel.

3.A.1.2 Design Criteria

The UNITAD Storage System structural design criteria are described in Section 2.A.1. Load combinations for normal, off-normal, and accident loads are evaluated in accordance with ANSI/ANS 57.9 and ACI-349 for the Concrete Cask (see NAC-UMS® Storage System FSAR, Table 2.2-1), and in accordance with the ASME Code, Section III, Division I, Subsection NB for Class 1 components of the Canister (see FSAR Table 2.2-2). The basket is evaluated in accordance with ASME Code, Section III, Subsection NG, and NUREG-6322. The Transfer Cask and the lifting yoke are lifting devices that are designed to NUREG-0612 and ANSI N14.6.

3.A.2 Weights and Centers of Gravity

The weights and centers of gravity (CGs) for the UNITAD Storage System and components are summarized in Table 3.A.2-1. The weights and CGs presented in this section are calculated on the basis of nominal design dimensions.

Table 3.A.2-1 UNITAD Storage System Weights and CGs

	Type 1		Type 2	
Description	**Calculated Weight (lb)**	**Center of Gravity[1]**	**Calculated Weight (lb)**	**Center of Gravity[1]**
Fuel Contents (including inserts)	35,700		35,700	
Poison Rods (Inserts)	1,225		1,225	
Canister (empty, w/o lids)	7,800	73	7,500	68
Canister Closure Lid	7,700		7,700	
Transfer Adapter Plate	~11,000		~11,000	
Transfer Cask Lifting Yoke[2]	~3,000		~3,000	
Water in Canister	13,200		12,200	
Basket	33,000		31,000	
Canister (with basket, without fuel or closure lid)	40,700	88	38,400	83
Canister (with fuel, water and closure lid)	97,200	97	94,000	92
Canister (with fuel, closure lid, and dry)	84,100	97	81,800	92
Transfer Cask (empty)	98,600	94	93,900	89
Transfer Cask and Canister, basket (empty, without lid)	139,200	94	132,300	88
Transfer Cask and Canister (with fuel, water and lid)	195,700	98	187,900	93
Transfer Cask and Canister (with fuel, dry with lids)	182,600	99	175,700	93
Concrete Cask Lid	3,700		3,700	
Concrete Cask (empty, with lid; includes optional lift lugs) – 145 pcf concrete	241,100	113	229,400	108
Concrete Cask (with loaded Canister and lids; includes optional lift lugs)	325,100	113	311,200	108

General Note: All weights are rounded up. Therefore, assembly weights cannot be computed using rounded value of component weights. Weights and CGs are calculated from nominal design dimensions.

[1] Center of gravity is measured from the bottom of each component.
[2] Transfer cask lifting yoke weight for specific sites may vary from listed weight. The site-specific yoke weight should be used for site-specific applications.

Table 3.A.2-2 Under-Hook Weights for the Transfer Cask

Configuration	PWR Type 1	PWR Type 2
Transfer cask (empty)	98,600	93,900
Transfer cask, canister (empty, without lid) and yoke[1]	144,900	137,900
Transfer cask; loaded canister wet (fuel, water and closure lid); and yoke[1]	201,400	193,500
Transfer cask, loaded canister dry (fuel and closure lid) and yoke[1]	188,300	181,300

General Note: All weights are rounded to the next 100 lb.

[1] Transfer cask lifting yoke weight for specific sites may vary from listed weight.

THIS PAGE INTENTIONALLY LEFT BLANK

3.A.3 Mechanical Properties of Materials

The mechanical properties of materials used in the fabrication of the UNITAD Storage System components are included in the UMS® FSAR, Tables 3.3-1 through 3.3-14. The primary steel, Type 304 stainless steel, was selected because of its high strength, ductility, resistance to corrosion and brittle fracture, and metallurgical stability for long-term storage.

3.A.3.1 Primary Component Materials

The steels and aluminum alloy used in the fabrication of the Canister and basket are:

Canister shell	ASME SA-240, Type 304 stainless steel
Canister bottom plate	ASME SA-240, Type 304 stainless steel
Canister closure lid	ASME SA-240/182, Type 304 stainless steel
Support disks	ASME SA-240. Type 304 stainless steel
Heat transfer disks	ASME SB-209, Type 6061-T651 aluminum alloy
Spacers	ASME SA-479, Type 304 stainless steel
Tie rods	ASME SA-479, Type 304 stainless steel
Basket end weldments	ASME SA-240, Type 304 stainless steel
Fuel tubes	ASTM A887-89, Grade A borated stainless steel

The mechanical properties of Type 6061-T651 aluminum heat transfer disks in the fuel basket are shown in UMS® FSAR Table 3.3-11. The mechanical properties of borated stainless steel are presented in Table 3.A.3-1.

Steels used in the fabrication of the Vertical Concrete Cask are:

Inner shell	ASTM A36 carbon steel
Pedestal and base	ASTM A36 carbon steel
Lid assembly	ASTM A36 carbon steel
Reinforcing bar	ASTM A615, Grade 60 carbon steel

The mechanical properties of concrete are listed in FSAR Table 3.3-12.

The steels used in the fabrication of the Transfer Cask are:

Inner shell	ASTM A588 low alloy steel
Outer shell	ASTM A588 low alloy steel
Bottom forging	ASTM A350, LF2

Top forging	ASTM A350, LF2
Retaining block	17-4 PH stainless steel
Trunnions	ASTM A350, LF2 low alloy steel
Shield doors and rails	ASTM A350, LF2 low alloy steel
Retaining block pins	ASTM A516, Grade 70

3.A.3.2 Fracture Toughness Considerations

The primary structural materials of the UNITAD Canister and basket are a series of stainless steels. These stainless steel materials do not undergo a ductile-to-brittle transition in the temperature range of interest for the NAC-UMS® System. Therefore, fracture toughness is not a concern for these materials.

Table 3.A.3-1 Mechanical Properties of A-887-89, Grade A, Borated Stainless Steel [46]

Property	**Value**		
Temperature (°F)	73	325	752
Tensile Yield Stress (ksi)	75	75	75
Modulus of Elasticity (ksi)	30.5 E03	30.5 E03	30.5 E03
Coefficient of Thermal Expansion α (in/in/°F)	9.80 E-06		
Density (lb/in^3)	0.280		

THIS PAGE INTENTIONALLY LEFT BLANK

3.A.4 General Standards for Casks

3.A.4.1 Chemical and Galvanic Reactions

The materials used in the fabrication and operation of the UNITAD Storage System are effectively the same as those used for the NAC-UMS® Storage System, so the evaluation presented in FSAR Section 3.4.1 to determine whether chemical, galvanic or other reactions among the materials, contents and environments can occur is applicable. For criticality control, the UNITAD Storage System uses borated stainless steel. However, like other stainless steels, no reactions are expected.

Material testing summarized in the ASM Handbook, Volume 13, Corrosion [19], reports that exposure of type 304 stainless steel to a marine atmosphere produces an average corrosion rate of less than 0.001 mil/year. Local pitting of an average depth of 1.2 mils had been observed after 15 years. Considering this performance for a 50-year design life leads to consideration of a maximum wall thickness variance of 0.00005 inch and postulated local pitting of 0.004 inch. This level of variance in shell thickness is insignificant relative to safe operational performance of the TSC for normal and accident condition loads.

3.A.4.2 Positive Closure

The UNITAD Storage System employs similar positive closures to those of the NAC-UMS® Storage System.

3.A.4.3 Lifting Devices

3.A.4.3.1 Vertical Concrete Cask Lift Evaluation

The Vertical Concrete Cask (VCC) may be lifted and moved using an air pad system under the base of the cask or two lifting anchors provided at the top of the cask. The weight of the heaviest, loaded concrete cask to be lifted by the jacking air pad system is 325,100 pounds with loaded canister and lids.

The lifting lugs are analyzed in accordance with ANSI N14.6 [9] and ACI-349-85 [4].

3.A.4.3.1.1 Bottom Lift by Air Pads

The VCC is designed to be capable of being transported by the use of air pallets inserted in the air inlet vents. The layout of the inlet vents provides four locations for air pallets, each with a surface area of at least 50 inches × 28 inches. Four air pallets must be used for stability.

The required total air pallet capacity for the four pallets, including a lift load factor of 10% is:

$$F = W \times DLF = 330{,}000 \times 1.1 = 363{,}000 \text{ lbs}$$

where:

W = 330,000----------Bounding maximum weight of VCC, with loaded canister, lids, & optional lifting lugs

DLF = 1.1----------Dynamic Load Factor

The minimum required concrete bearing capacity at each of four locations is:

$$U = (W \times DLF \times LF_d)/4 = (330{,}000 \times 1.1 \times 1.4)/4 = 127{,}050 \text{ lb}$$

where:

W = 330,000----------Bounding maximum weight of VCC, with loaded canister, lids, & optional lifting lugs

DLF = 1.1----------Dynamic Load Factor

LF_d = 1.4----------Load Factor for Dead Loads [4]

To ensure that the concrete bearing stress at the air pad locations due to lifting the cask does not exceed the allowable stress, the area of the surface needed to adequately spread the load is determined in this section. This evaluation is applicable to either air pallets or hydraulic jacks.

The allowable bearing capacity of the concrete is:

$$U_b = \phi(0.85) f_c' A \qquad [4]$$

where:

φ = 0.70----------Strength reduction factor for bearing on concrete [4]

f'_c = 4000 psi ----------Compressive Strength, Concrete, 200 °F

Solving the equation for A determines the minimum required bearing area at the concrete-steel interface for each of the four locations:

$$A \geq \frac{U}{\phi(0.85)f_c'} = \frac{127{,}050}{0.70(0.85)(4000)} = 53.4 \text{ in}^2$$

The required bearing area at the concrete-steel interface can be obtained by square, rectangular or circular shapes, as follows:

For a square bearing area:

Length of one side of the square = $\sqrt{A} = \sqrt{53.4} = 7.31$ inches square

or

For a circular bearing area:

Diameter = $\sqrt{\frac{4A}{\pi}} = \sqrt{\frac{4 \times 53.4}{\pi}} = 8.25$ inches

The force exerted by either an air pallet or a jack is applied through the 2.0-inch thick steel air inlet top plate. This increases the effective bearing area on the concrete due to the spreading out of the load through the steel plate. Assuming a 45° spread angle, the minimum required top surface area for each of the four air pallets (or jacks) is:

For a square or rectangular bearing area:

Minimum required size of top surface of a square or rectangular air pallet or jack, after adjustment for the 45° spread through the 2-inch thick inlet top plate is:

(7.31 in. – 2.0 in. – 2.0 in.) × (7.31 in. – 2.0 in.– 2.0 in.) = 3.31 inch × 3.31 inch

Therefore, a square or rectangular air pallet or jack must have a minimum top surface area of:

A = 3.31 inch x 3.31 inch = 11.0 square inches

For a circular bearing area:

Minimum required diameter of top surface of circular air pallet or jack, after adjustment for the 45° spread through the 2 inch thick inlet top plate is:

8.25 inch diameter – 2(2.0) = 4.25 inch diameter

Therefore, a circular air pallet or jack must have a minimum top surface area of:

$$A = \frac{\pi d^2}{4} = \frac{\pi(4.25)^2}{4} = 14.2 \text{ in}^2$$

3.A.4.3.1.2 Top Lift by Lift Lugs

Each of the two lifting fixtures located in the top of the VCC body is a steel embedment type concrete anchor with two lugs extending external to the concrete. The steel lugs are evaluated per AFFDL-TR-69-42 [32]. The adequacy of the concrete in resisting pull out of the embedment anchor is evaluated per ACI-349-85 [4].

The VCC lug lift analysis is based on a maximum bounding weight for the VCC (with loaded canister and lids) of 330,000 lbs, plus a dynamic load factor of 10%. There are 2 anchors x 2 lugs/anchor = 4 lugs in use. With 10% dynamic load factor, the load (P) on each lug is:

$$P = \frac{330{,}000 \times 1.1}{4} = 90{,}750 \text{ lb}$$

Lifting Lug Axial Load

The lugs are evaluated for adequate strength under a uniform axial load. The bearing stresses and loads for lug failure involving bearing, shear-tear-out, or hoop tension in the region forward of the net section are determined using an allowable load coefficient (K). Actual lug failures may involve more than one failure mode, but such interaction effects are accounted for in the values of K (from AFFDL-TR-69-42 [32]).

The lug yield bearing stress (F_{bryL}) is

$$F_{bryL} = K\frac{a}{D}(F_{ty}) = 1.46\left(\frac{2.97}{4.06}\right)53.0 = 56.6 \text{ ksi} \quad [32]$$

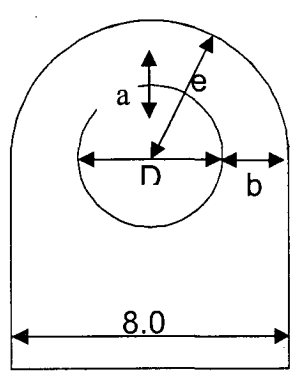

where:

K	=	1.46 [32]
a	=	2.97 in--Dist, edge of hole to edge of lug
D	=	4.06 in
e/D	=	5.0/4.06 = 1.23 < 1.5
e	=	5.0 in
F_{ty}	=	53.0 ksi Yield strength, SA 537 CL 2, 200°F

The allowable lug ultimate bearing load (P_{bruL}) for lug failure in bearing, shear-out, or hoop tension is:

$$P_{bruL} = 1.304 \times F_{bryL} \times D \times t = 1.304(56.6)(4.06)(2.0) = 599.3 \text{ kip} \quad [32]$$

where:

$$\frac{F_{tu}}{F_{ty}} = \frac{80\ ksi}{53\ ksi} = 1.51 > 1.304$$

t	=	2.0 in	Thickness of lug
F_{tu}	=	80.0 ksi	Ultimate strength, SA 537 CL 2, 200°F
F_{ty}	=	53.0 ksi	Yield strength, SA 537 CL 2, 200°F

The allowable failure load (P_{bryL}) for yield is:

$$P_{bryL} = F_{bryL} \times D \times t = 56.6(4.06)(2.0) = 459.6 \text{ kip}$$

For redundant lifting systems, ANSI N14.6 [9] requires that load-bearing members be capable of lifting three times the load without exceeding the tensile yield strength of the material and five times the load without exceeding the ultimate tensile strength of the material.

The factors of safety for the lugs are:

Ultimate:

$$FS = \frac{599.3}{90.75} = 6.6 > 5.0$$

Yield:

$$FS = \frac{459.6}{90.75} = 5.1 > 3.0$$

The net cross-sectional area of the lifting lugs is also evaluated. The tensile stress (σ) in the net cross sectional area is:

$$\sigma = \frac{P}{A} = \frac{90.75}{7.88} = 11.5 \text{ ksi}$$

where:

P	= 90.75 kip	Lug load
A	$= 2 \times b \times t = 2 \times 1.97 \times 2.00 = 7.88 \text{ in}^2$	
b	= 1.97 inches ----------	(width of net cross-section on one side of hole)

The factors of safety (FS) are:

Ultimate:

$$FS = \frac{80.0}{11.5} = 7.0 > 5.0$$

Yield:

$$FS = \frac{53.0}{11.5} = 4.6 > 3.0$$

Embedded Plates

The embedded plates are evaluated. The cross-section of the embedded plates is 2 inches × 8 inches. The maximum load on each embedded plate is 90.75 kip.

The stress in the embedded plate is:

$$\sigma = \frac{P}{A} = \frac{90.75}{16.0} = 5.67 \text{ ksi}$$

where:

$$A = t \times w = 2.0 \times 8.0 = 16.0 \text{ in}^2$$

$$t = 2.0 \text{ in}$$

$$w = 8.0 \text{ in}$$

The factors of safety (FS) are:

Ultimate:

$$FS = \frac{80.0}{5.67} = 14.0 > 5.0$$

Yield:

$$FS = \frac{53.0}{5.67} = 9.3 > 3.0$$

where:

F_{tu} = 80.0 ksi Ultimate strength, SA 537 CL 2, 200°F (Ref. 10)

F_{ty} = 53.0 ksi Yield strength, SA 537 CL 2, 200°F (Ref. 10)

Concrete Anchors

The steel embedment is evaluated per Appendix B of ACI-349-85 [4]. The allowable load (P_d) on the concrete anchor is determined per ACI-349-85, Appendix B, Section B.4.2. The concrete anchor embedment length is 68.6 inches. The projected area of a single embedment anchor is determined by creating a cone that projects 45° from the base plate of the anchor extending toward the top of the cask, and subtracting the projected area of the base plate. In this case, the shear cone in the concrete surrounding an anchor spreads out radially to (and is limited by) the inner and outer surfaces of the concrete shell. However, the cone also spreads circumferentially. The effect of the circumferential spread is to allocate ½ of the top concrete surface area of the cask to the projected cone area for each of the two anchors. However, the evaluation conservatively considers only ¼ of the top concrete surface to be allocated to each of the two anchors. The evaluation of the steel embedment conservatively ignores the contribution of the tension reinforcements (vertical and circumferential rebar) within the concrete cask.

The maximum pullout strength of the concrete (P_d) for a single concrete anchor is:

$$P_d = 4 \times \Phi \times \sqrt{f_c'} \times A_{cd} = 4 \times 0.85 \times \sqrt{3800} \times 2255 = 472{,}626 \text{ lb} = 472.6 \text{ kips} \quad [4]$$

where:

Φ = 0.85 Strength reduction factor [4]

f_c' = 3,800 psi Concrete compression strength, 300°F

$A_{cd} = A_{cone} - A_{head} = 2375 - 120 = 2255 \text{ in}^2$

$A_{cone} = 0.25\left(\pi\left(R_o^2 - R_i^2\right)\right) = 0.25 \times (\pi) \times ((68.0)^2 - (40.0)^2) = 2375 \text{ in}^2$-

(Projected cone area at concrete surface for one anchor, considering 1/4 of total surface area at the top of the cask allocated to each of the two anchors).

R_o = 136.0 / 2 = 68.0 inches ----------Outer radius of concrete cask

R_i = 80 / 2 = 40.0 inches ----------Inner radius of concrete cask

$A_{head} = 12 \times 10 = 120 \text{ in}^2$----------Bearing area of anchor base plate (conservatively ignoring chamfers)

The maximum load on a single anchor is twice the load on a lug:

$$W = 2 \times 90.75 \text{ kip} = 181{,}500 \text{ lb} = 181.5 \text{ kips}$$

The factor of safety for a single anchor is:

$$FS = \frac{P_d}{W} = \frac{472.6}{181.5} = 2.6$$

Base Weldment Lift Evaluation

The weight of the Canister and its contents rests on the pedestal portion of the base weldment. When the VCC is lifted using the lifting fixtures on the top of the concrete shell, the weight of the Canister and contents is transferred through the base weldment into the concrete shell via 44 Nelson studs. The base weldment is evaluated per ASME Section III-NF. The Nelson studs are evaluated per ACI-349-85.

The base weldment structure stress results were evaluated using the following criteria:

ASME III-NF (NF-3220)	
Membrane	$1.0S_m$
Membrane plus Bending	$1.5S_m$
Shear	$0.6S_m$

A quarter-symmetry ANSYS finite element model of the VCC base weldment is used to perform the structural evaluation. The model is constructed using SOLID45 elements for structural steel components. COMBIN14 elements are used to model the Nelson studs. Figure 3.A.4-2 illustrates the base weldment finite element model. Nelson stud locations are shown in Figure 3.A.4-3.

The geometry of the applied load on the pedestal top plate, in relation to the restraining forces of the Nelson studs, results in a prying action between the concrete surfaces of the VCC versus the surfaces of the inlet vent top plate, inlet vent side plate and baseplate. The prying action generates localized bearing forces between the concrete wall and the weldment, and therefore will result in an increased total force reacted by the Nelson studs and will also change the distribution of forces within the Nelson stud groups. CONTAC52 gap elements are used to model surface behavior in areas where the base weldment may be restrained (during lifting) by adjacent concrete surfaces. The gap elements allow the steel weldment surfaces to deflect away from the concrete wall, while being constrained from deflecting into the concrete. The analysis indicated that some gap elements do close during the lifting and bearing forces on the concrete occur in those locations. Figures 3.A.4-4 and 3.A.4-5 illustrate the locations of the gap elements.

The pedestal cylinder is not welded to the pedestal top plate or to the rails. For the finite element analysis, a vertical gap is left between the pedestal cylinder and both the pedestal top plate and rails, in order to properly model the base weldment behavior with respect to the cylinder.

A weight of 84,100 pounds for the loaded canister, plus a ten percent dynamic load factor, is applied as a pressure to the pedestal top plate. The diameter of the pedestal top plate is 66.5 inches.

$$P_{can} = \frac{1.1 \times W_{can}}{A_{ped}} = \frac{1.1 \times (84{,}100)}{\pi(66.5^2)/4} = \frac{92510}{3473} = 26.64 \text{ psi}$$

An inertia load of 1.1g (Z-direction) is applied to the finite element model for dynamic load factor (DLF), per ANSI/ASME N45.2.15.

The loads applied to the pedestal transfer to the Nelson studs, which distribute the load into the concrete shell.

VCC Base Weldment – Stresses in Base Material

The maximum stresses in base material (not welds) of the base weldment occur in the rails, in the free spans between the pedestal top plate and the inlet vent top plates. Stress values are summarized in Tables 3.A.4-1 and 3.A.4-2 for several locations. The maximum membrane stress is 8.1 ksi. The maximum membrane plus bending stress is 13.7 ksi.

The base weldment structure stress results were evaluated using the following criteria per ASME III-NF (NF-3220):

Membrane	$1.0S_m$
Membrane plus Bending	$1.5S_m$
Shear	$0.6S_m$

The factors of safety are:

Membrane:

$$FS = \frac{S_m}{\sigma_m} = \frac{19.3}{8.1} = 2.38$$

Membrane plus Bending:

$$FS = \frac{1.5S_m}{\sigma_m} = \frac{28.95}{13.7} = 2.11$$

where:

S_m=19.3 ksi----------Design Stress Intensity, A-36 Carbon Steel, 300°F

VCC Base Weldment – Stresses in Welds

The base is a welded assembly. The structural welds were evaluated using an allowable stress of $0.6S_m$. Forces on welds were determined from the finite element analysis. Weld force values are summarized in Table 3.A.4-3.

VCC Base Weldment – Stresses in Welds – Pedestal Top Plate to Rails

The pedestal top plate is welded to the rails with 3/8 inch fillet welds on both sides of each rail.

Forces on the welds are determined from the ANSYS analysis, by summing all nodal forces on the relevant contact areas. Forces, weld length, and weld areas were based on the ¼ symmetry model. Forces on welds were determined at the interface between the pedestal top plate and each rail (separately). Pedestal top-plate-to-rails weld force values are summarized in Table 3.A.4-3. "Rail A" designates the rail(s) which pass continuously (in one piece) from inlet top plate to inlet top plate. "Rail B" refers to the rail that is interrupted by Rail A.

The weld stress calculation shown in detail below is for the Pedestal-Top-Plate-to-Rail-A connection, since this weld location has greater resultant weld force and a lower factor of safety than the Pedestal-Top-Plate-to-Rail-B connection. Additionally, the weld stress calculation conservatively uses the weld throat area to determine a maximum shear stress; then uses design stress intensity for the base material (rather than the weld material) for determining factor of safety. The maximum stress in pedestal-top-plate-to-rails welds is:

$$\tau = \frac{F_w}{A} = \frac{32{,}857}{17.63} = 1.86 \text{ ksi}$$

where:

$$F_w = \sqrt{F_x^2 + F_y^2 + F_z^2} = \sqrt{(-32{,}481)^2 + (3877)^2 + (3090)^2} = 32{,}857 \text{ lb}$$

F_x = -32,481 lb Weld force, X-direction
F_y = 3877 lb Weld force, Y-direction
F_z = 3090 lb Weld force, Z-direction
$A = l_w \times (t_w \times 0.707) = 66.5 \times (0.375 \times 0.707) = 17.63\ in^2$---Weld area
$l_w = 2 \times l_{Rail\ A} = 2 \times (33.25) = 66.5$ inch-------Weld length
$l_{Rail\ A} = 66.5 / 2 = 33.25$ inch ----------Rail-A length, in quarter symmetry model
$t_w = 0.375$ inch----------Weld size

The Factor of Safety is:

$$FS = \frac{0.6S_m}{\tau} = \frac{0.6 \times 19.3}{1.86} = 6.2$$

where:

S_m=19.3 ksi----------Design Stress Intensity, A-36 Carbon Steel, 300°F

VCC Base Weldment – Stresses in Welds – Rails to Inlet Vent Top Plates

The rails are attached to the inlet vent top plates using 5/8 inch fillet welds on all sides on each rail.

Forces on the welds are determined from the ANSYS analysis, by summing all nodal forces on the relevant contact areas. Forces, weld length, and weld areas were based on the ¼ symmetry model. The highest force on welds occurs on the weld between Rail-A and an inlet top plate. The weld stress calculation conservatively uses the weld throat area to determine a maximum shear stress; then uses design stress intensity for the base material (rather than the weld material) for determining factor of safety. Rail-to-inlet-vent-top-plate weld force values are summarized in Table 3.A.4-3.

The stress in the weld is:

$$\tau = \frac{F_w}{A} = \frac{17{,}366}{4.42} = 3.93\ ksi$$

where:

$$F_w = \sqrt{F_x^2 + F_y^2 + F_z^2} = \sqrt{(14{,}992)^2 + (4762)^2 + (-7359)^2} = 17{,}366\ lb$$

$F_x =$ 14,992 lb Weld force, X-direction
$F_y =$ 4762 lb Weld force, Y-direction
$F_z =$ -7359 lb Weld force, Z-direction
$A = l_w \times t_w = 10.0 \times 0.625 \times 0.707 = 4.42 \text{ in}^2$
$l_w = 2 \times ((84/2) - 37.0) = 2 \times 5.0 = 10.0$ inch weld length (ignoring rail end)
$t_w = 0.625$ in---------- Weld size

The Factor of Safety is:

$$FS = \frac{0.6S_m}{\tau} = \frac{0.6 \times 19.3}{3.93} = \frac{11.58}{3.93} = 2.95$$

where:

Sm = 19.3 ksi----------Design Stress Intensity, A-36 Carbon Steel, 300°F

VCC Base Weldment – Stresses in Welds – Inlet Vent Top Plate to Inlet Vent Side Plate

The inlet vent top plates are attached to the inlet vent side plates using 1/8 inch fillet welds and ¼ inch partial groove welds.

Forces on the welds are determined from the ANSYS analysis, by summing all nodal forces on the relevant contact areas. Forces, weld length, and weld areas were based on the ¼ symmetry model. The highest force on welds occurs on the weld between the inlet top plate and side plate on the Rail-A side of the model. For conservatism, the weld allowable is calculated using base material properties rather than weld properties. Inlet-vent-top-plate-to-inlet-vent-side-plate weld force values are summarized in Table 3.A.4-3.

The stress in the weld is:

$$\tau = \frac{F_w}{A} = \frac{20{,}676}{10.73} = 1.93 \text{ ksi}$$

where:

$$F_w = \sqrt{F_x^2 + F_y^2 + F_z^2} = \sqrt{(-20{,}580)^2 + (-921)^2 + (-1766)^2} = 20{,}676 \text{ lb}$$

$F_x =$ -20,580 lb Weld force, X-direction
$F_y =$ -921 lb Weld force, Y-direction
$F_z =$ -1776 lb Weld force, Z-direction

$$A = (l_w \times t_{w-fillet}) + (l_w \times t_{w-groove}) = (31.7 \times 0.125 \times 0.707) + (31.7 \times 0.25) = 10.73 \text{ in}^2$$

l_w = 31.7 inch----------Weld length (for both fillet and groove welds)

$t_{w\text{-}fillet}$ = 0.125 in ---------- Fillet weld size

$t_{w\text{-}groove}$ =0.25 in---------- Partial groove weld size

The Factor of Safety is:

$$FS = \frac{0.6S_m}{\tau} = \frac{0.6 \times 19.3}{1.93} = \frac{11.58}{1.93} = 6.0$$

where:

Sm = 19.3 ksi----------Design Stress Intensity, A-36 Carbon Steel, 300°F

VCC Base Weldment – Stresses in Welds – Inlet Vent Side Plates to Baseplate

The inlet vent side plates are attached to the baseplate using 1/4 inch fillet welds on one side of each side plate.

Forces on the welds are determined from the ANSYS analysis, by summing all nodal forces on the relevant contact areas. Forces, weld length, and weld areas were based on the ¼ symmetry model. The highest force on welds occurs on the weld on the Rail-A side of the model. For conservatism, the weld allowable is calculated using base material properties rather than weld properties. Inlet-vent-side-plate-to-baseplate weld force values are summarized in Table 3.A.4-3.

The stress in the weld is:

$$\tau = \frac{F_w}{A} = \frac{18{,}679}{4.88} = 3.83 \text{ ksi}$$

where:

$$F_w = \sqrt{F_x^2 + F_y^2 + F_z^2} = \sqrt{(16{,}978)^2 + (-7787)^2 + (168)^2} = 18{,}679 \text{ lb}$$

F_x = 16,978 lb Weld force, X-direction

F_y = -7787 lb Weld force, Y-direction

F_z = 168 lb Weld force, Z-direction

$A = l_w \times t_w = 27.6 \times 0.25 \times 0.707 = 4.88 \text{ in}^2$ ----Weld area

l_w = (31.76 – 4) = 27.76 inch > 27.6 inch ------Weld length

t_w = 0.25 in-- ---------- ----------Weld size

The Factor of Safety is:

$$FS = \frac{0.6S_m}{\tau} = \frac{0.6 \times 19.3}{3.83} = \frac{11.58}{3.83} = 3.02$$

where:

Sm = 19.3 ksi----------Design Stress Intensity, A-36 Carbon Steel, 300°F

Therefore, the minimum factor of safety for welds within the base weldment is 2.95.

VCAM Base Weldment – Nelson Studs

During a top end VCC lift, the Nelson studs transmit the weight of a loaded canister to the concrete shell of the VCC. The ability of the Nelson studs to transfer load to the concrete VCC is evaluated per "Code Requirements for Nuclear Safety Related Concrete Structures" (ACI-349-85) [4].

The maximum pullout strength of the concrete (P_d) for a single Nelson stud is:

$$P_d = 4 \times \Phi \times \sqrt{f_c'} \times A_{cd} = 4 \times 0.85 \times \sqrt{3800} \times 115.1 = 24{,}124 \text{ lb}$$

where:

Φ = 0.85---------- Strength reduction factor

f_c' = 3,800 psi ---------- Concrete compression strength, 300°F,

A_{cd} = 115.1 in^2----------Projected cone area of a single Nelson stud, less the head area, considering proximity to symmetry line (Determined by ANSYS macro)

l_e= (h - h_h) = (6.0 – 0.375) = 5.625 in-Effective length of Nelson Stud embedment

h = 6.00 in ----------Height of Nelson Stud

d = 0.75 in ----------Diameter of Nelson Stud

h_h = 0.375 in ----------Head Height of Nelson Stud

d_h =1.250 in ----------Head Diameter of Nelson Stud

Table 3.A.4-4 lists the loads in each Nelson stud. The maximum load on a single Nelson stud is F = 7,899 pounds. A load factor of 1.4 for dead loads is applied per ACI-349-85. The factored load is 1.4 × 7,899 lb = 11,059 pounds.

The Factor of Safety for the single most highly loaded Nelson stud is:

$$FS = \frac{P_d}{F} = \frac{24,124}{11,059} = 2.18$$

The geometry of the Nelson stud grouping is such that the projected cones intersect and overlap each other. Net effective projected cone areas for the groups of two to four studs were determined in accordance with on ACI-349-85, considering the spacing of the studs and proximity to a line of symmetry in the model. The worst grouping case, based on factor of safety, was shown to be for the two most highly loaded Nelson studs.

The combined net effective cone area (A_{cd}), for the two relevant Nelson studs is 223.8 in^2. The load on the two relevant adjacent Nelson studs is (7899 + 3802) = 11,701 pounds. The factored load is 1.4 × 11,701 lb = 16,381 pounds.

The allowable concrete pullout strength for the group of two studs is:

$$P_{cd} = 4 \times 0.85 \times \sqrt{3800} \times 223.8 = 46,906 \text{ lb}$$

The Factor of Safety for the worst case grouping of (two) Nelson studs is:

$$FS = \frac{P_{cd}}{F} = \frac{46,906}{16,381} = 2.86$$

The maximum tensile stress within a Nelson stud based on the maximum factored load in a single Nelson stud (1.4 x 7899 lb = 11,059 lb.) is:

$$\sigma = \frac{F}{A_s} = \frac{11,059}{0.44} = 25.1 \text{ ksi}$$

where:

$$A_s = \frac{\pi}{4} D^2 = \frac{\pi}{4} 0.75^2 = 0.44 \text{ in}^2$$

The design tensile strength for embedment steel is based on a maximum steel stress of the lesser of ΦS_y or 0.8 S_u, where $\Phi = 0.9$ [4].

The properties of the Nelson stud material (from "Nelson Stud Welding Specification: S3L Shear Connectors (SC)" are:

S_y = 51.0 ksi----------Yield Strength, Mild Steel S3L Nelson stud
S_u = 65.0 ksi----------Ultimate Tensile Strength, Mild Steel S3L Nelson stud

$\Phi S_y = 0.9 \times 51.0$ ksi = 45.9 ksi and $0.8\ S_u = 0.8 \times 65.0 = 52.0$ ksi. Therefore,

$\Phi S_y = 0.9 \times 51.0$ ksi = 45.9 ksi is the maximum allowable embedment steel stress.

The Factor of Safety is:

$$FS = \frac{\phi S_y}{\sigma} = \frac{45.9}{25.1} = 1.83$$

The minimum factor of safety for the Nelson studs is 1.83; therefore, the Nelson Stud design is structurally adequate.

VCC Base Weldment – Bearing Force on Concrete at Gap Element Locations

Deformation of the base weldment during lifting results in bearing forces applied to the concrete by the steel weldment. The highest bearing force was found to be 769 pounds. The effective area associated with this bearing load force is $0.88 \times 0.88 = 0.77$ sq inches. The factored bearing force is $F_{brg} = 1.4 \times 769 = 1{,}077$ pounds.

The design bearing strength (for 0.77 square inches) is:

$$S_{brg} = \Phi \times (0.85 \times f_c' \times A\ ) = 0.70(0.85 \times 3800 \times 0.77) = 1741 \text{ lb}$$

where:

Φ = 0.70---------- Strength Reduction Factor for Concrete
f_c' = 3,800 psi ---------- Concrete Compression Strength, 300°F

The Factor of Safety is:

$$FS = \frac{S_{brg}}{F_{brg}} = \frac{1741}{1077} = 1.62$$

Figure 3.A.4-1 Canister Lift Half-Symmetry Finite Element Model

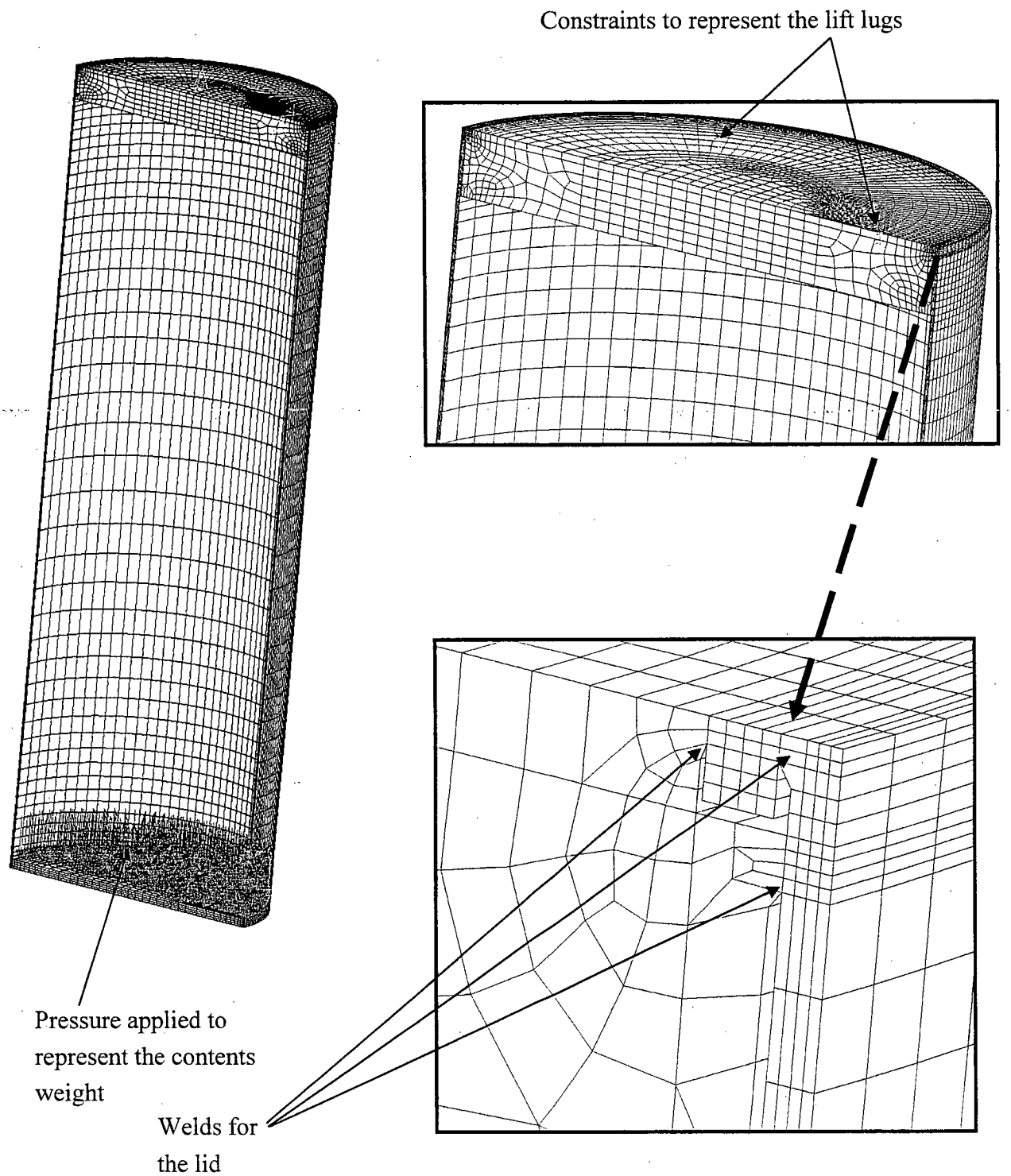

Figure 3.A.4-2 Base Weldment Finite Element Model

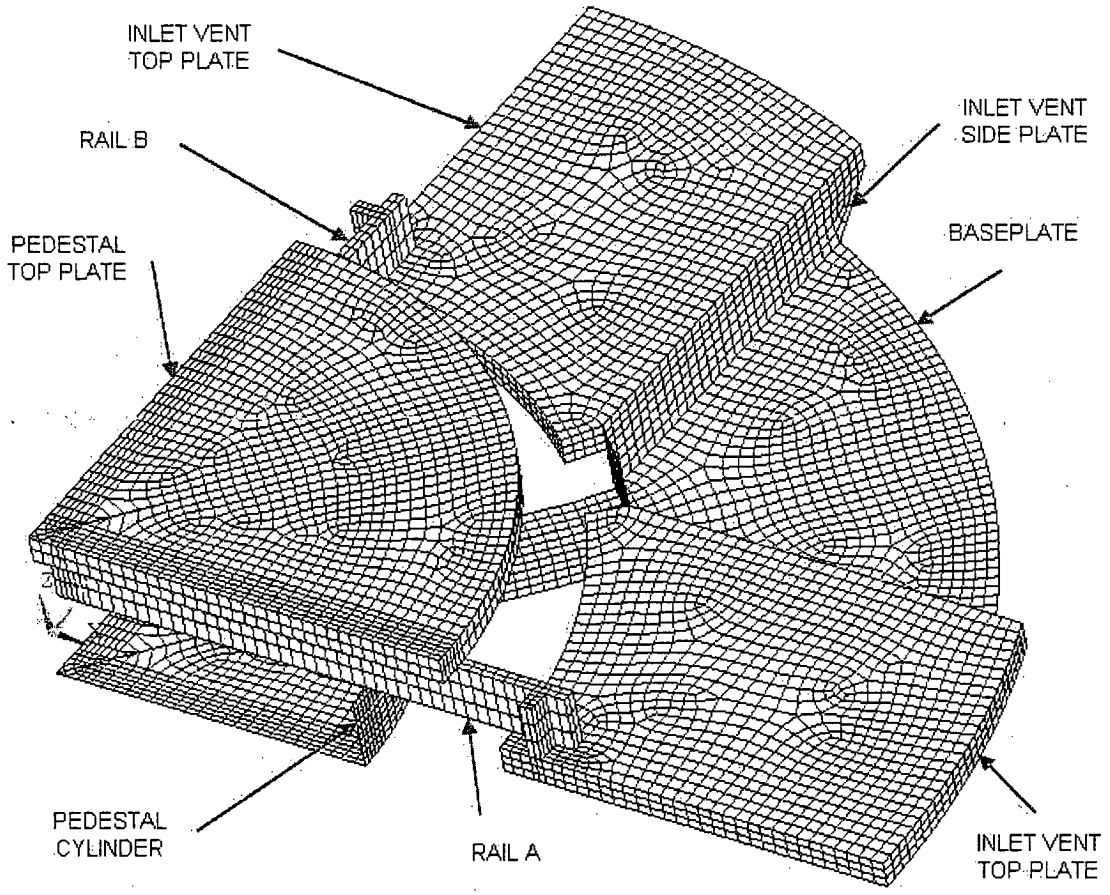

Table 3.A.4-3 Nelson Studs – Base Weldment Finite Element Model

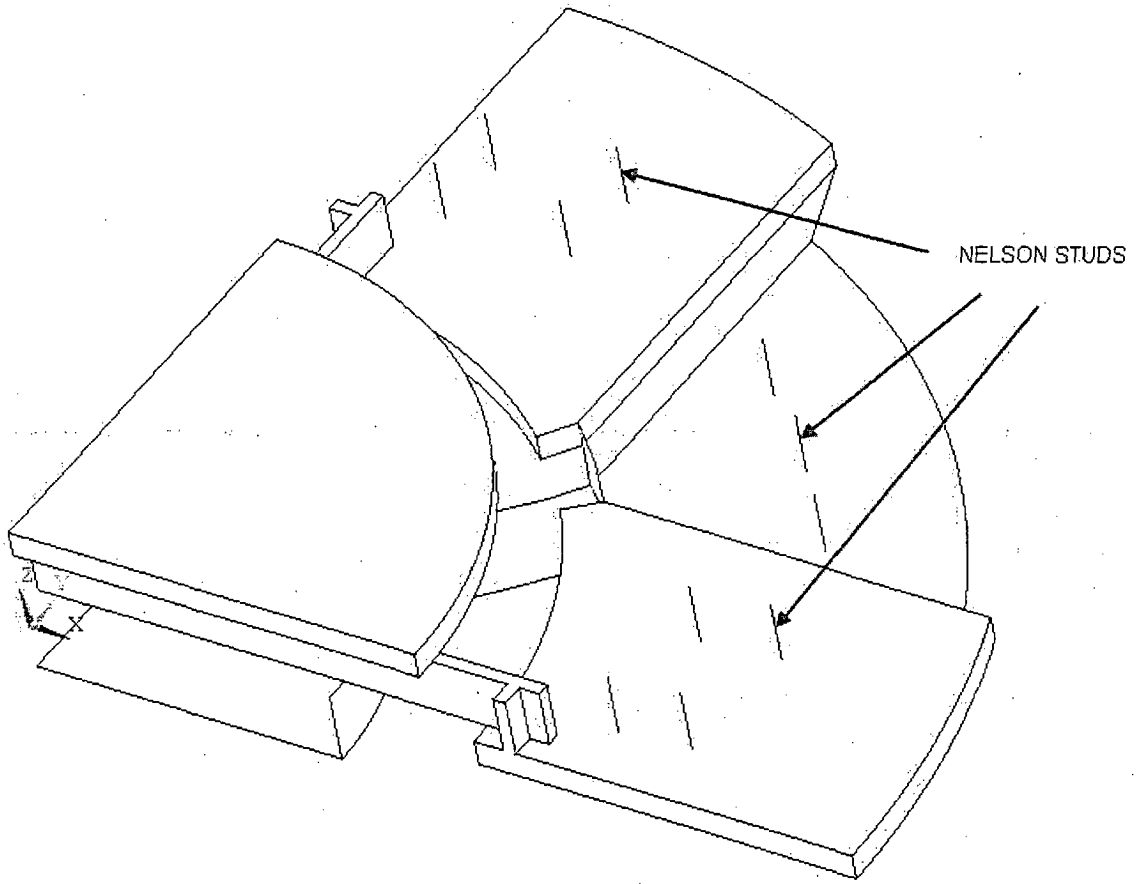

Figure 3-A.4-4 Gap Elements, View 1 – Base Weldment Finite Element Model

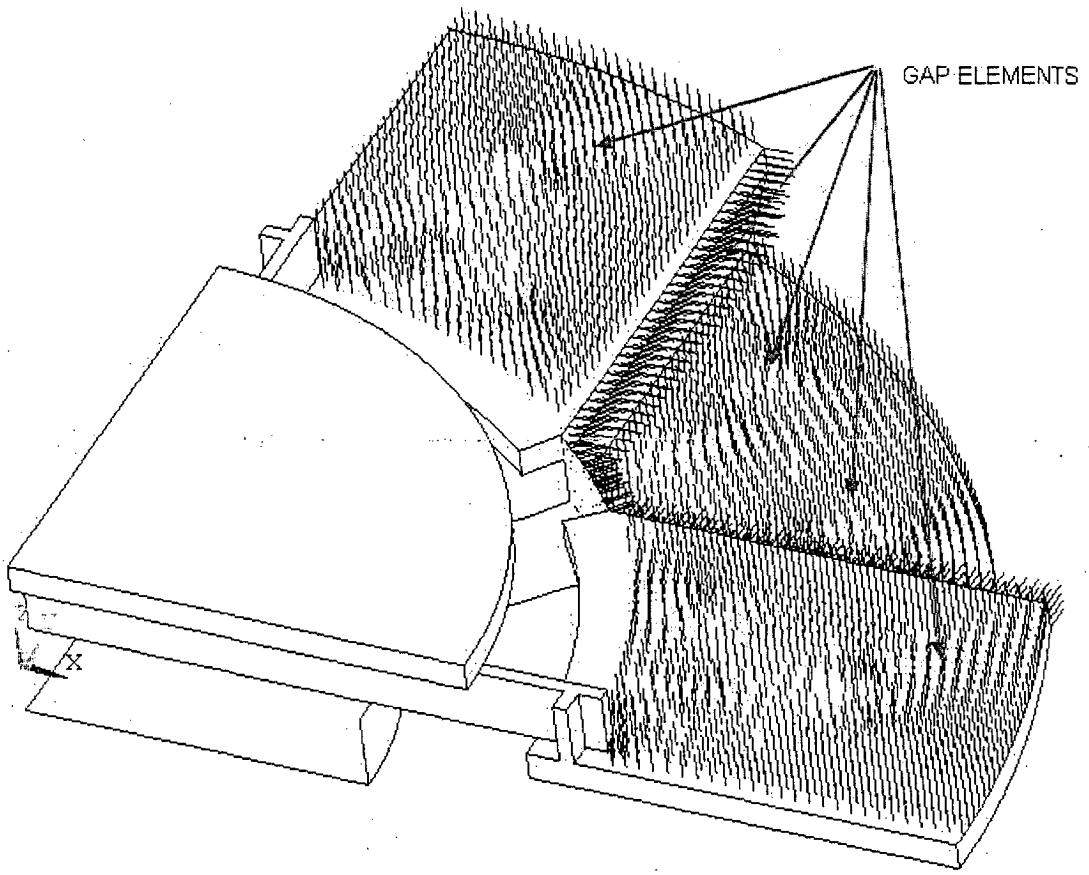

Figure 3.A.4-5 Gap Elements, View 2 – Base Weldment Finite Element Model

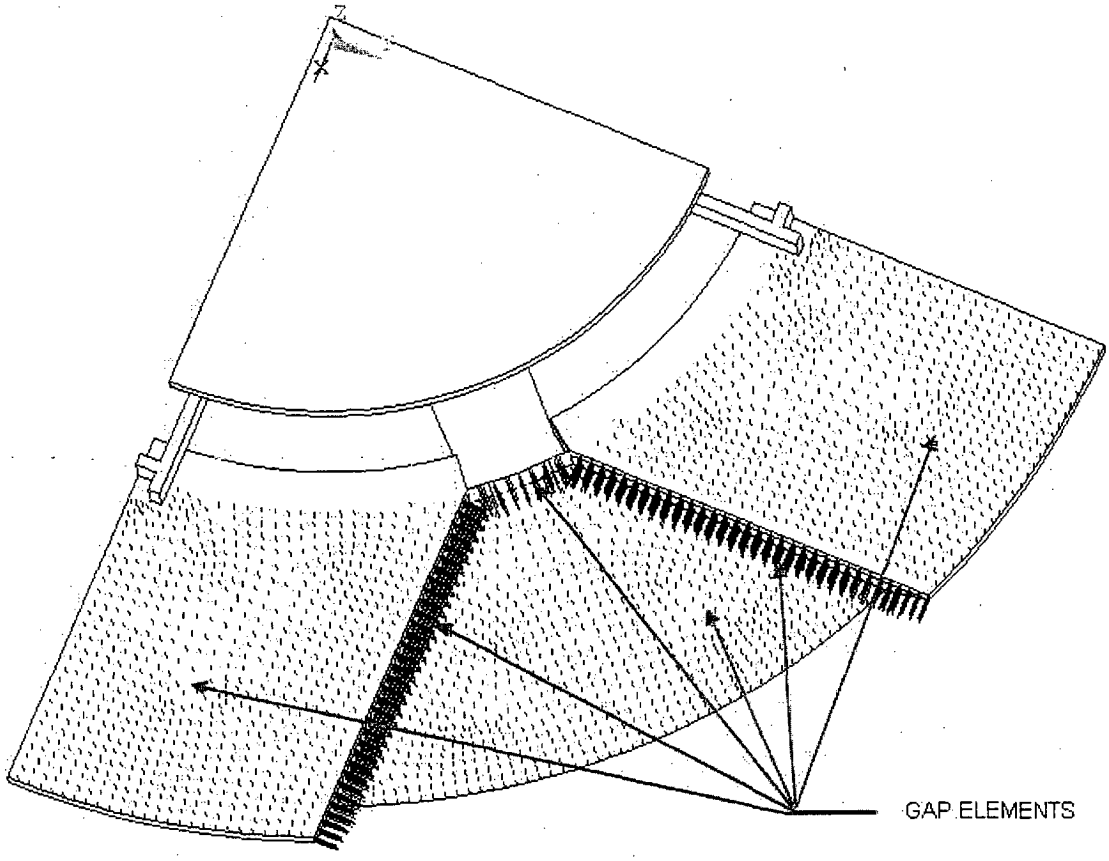

Table 3.A.4-1 Base Weldment Stresses, P_m, ksi

Component	Node 1	Node 2	Stress Components						S_{int}
			S_x	S_y	S_z	S_{xy}	S_{yz}	S_{xz}	
Pedestal Top Plate near Rail A	3745	4195	-4.1	-4.0	-0.6	-1.1	0.2	1.8	5.9
Pedestal Top Plate near Rail B	11434	11900	-3.9	-3.8	-0.5	-1.0	1.6	0.2	5.4
Rail A (inboard side)	3750	3678	-6.4	0.2	-1.3	0	-0.1	3.1	8.1
Rail A (outboard side)	3748	3676	-5.7	0.1	-0.7	0	0.1	2.4	7.0
Rail B (inboard side)	11453	11447	0.2	-6.2	-1.2	0	2.9	-0.1	7.8
Rail B (outboard side)	11437	11433	0.1	-5.7	-0.7	0	2.2	0.1	6.7
Inlet Vent Top Plate at Nelson Stud A1	1706	1679	3.6	1.7	5.1	0.4	0.1	0.2	3.6
Inlet Vent Top Plate at Nelson Stud B1	9631	9604	1.5	3.1	4.7	0.4	0.2	0.1	3.3
Inlet Vent Top Plate adjacent to Rail A	926	988	-5.6	-4.4	0.1	1.2	-0.2	2.0	7.7
Inlet Vent Top Plate adjacent to Rail B	7706	7794	-4.1	-5.6	0.1	1.2	2.0	-0.2	7.5

Table 3.A.4-2 Base Weldment Stresses, $P_m + P_b$, ksi

Component	Node 1	Node 2	Stress Components						S_{int}
			S_x	S_y	S_z	S_{xy}	S_{yz}	S_{xz}	
Pedestal Top Plate near Rail A	3745	4195	-7.3	-5.6	-1.7	-2.1	0.4	2.6	8.9
Pedestal Top Plate near Rail B	11434	11900	-5.1	-6.3	-1.4	-1.9	2.3	0.3	7.9
Rail A (inboard side)	3750	3678	-10.3	0.9	-1.2	0	-0.3	4.5	13.3
Rail A (outboard side)	3748	3676	-9.8	0.6	-0.5	0.1	0.1	3.2	11.5
Rail B (inboard side)	11453	11447	0.9	-11.0	-1.1	-0.8	4.3	-0.3	13.7
Rail B (outboard side)	11437	11433	0.6	-10.7	-0.5	0.1	3.0	0.1	12.2
Inlet Vent Top Plate at Nelson Stud A1	1706	1679	2.9	1.2	5.5	0.4	0.3	1.4	5.0
Inlet Vent Top Plate at Nelson Stud B1	9631	9604	1.1	2.5	5.0	0.4	1.3	0.2	4.6
Inlet Vent Top Plate adjacent to Rail A	926	988	-8.2	-5.4	0.5	3.0	-0.3	3.3	12.6
Inlet Vent Top Plate adjacent to Rail B	7706	7794	-5.1	-8.5	0.3	2.9	3.3	-0.3	12.4

Table 3.A.4-3 Base Weldment, Weld Forces, lbs

Component	Weld Location	Force Components			$F_w = \sqrt{F_x^2 + F_y^2 + F_z^2}$
		F_x	F_y	F_z	
Pedestal-Top-Plate-to-Rails	Pedestal Top Plate to Rail A	-32481	3877	3090	32857
	Pedestal Top Plate to Rail B	489	-20413	11068	23226
Rails-to-Inlet-Vent-Top-Plate	Rail A to Rail B	65	-375	28	382
	Rail A & Item 9 to Inlet Vent Top Plate	14992	4762	-7359	17366
	Rail B & Item 9 to Inlet Vent Top Plate	4295	14207	-6490	16199
Inlet-Vent-Top-Plates-to-Side-Plates	Inlet Vent Top A to Side Plate A	-20580	-921	-1766	20676
	Inlet Vent Top B to Side Plate B	-625	-20137	-1808	20228
Inlet-Vent-Side-Plates-to-Baseplate	Side Plate A to Base Plate	16978	-7787	168	18679
	Side Plate B to Base Plate	-7994	16405	148	18250
	Side Plate Corner to Base Plate	-1678	-1533	4154	4735

Table 3.A.4-4 Nelson Stud Loads

Element	Load [1], lb
13930	7,899
13931	2,741
13932	3,802
13933	1,591
13934	77
13935	0
13936	7,193
13937	2,532
13938	3,549
13939	1619
13940	110

[1] Compressive loads are indicated with negative sign.

3.A.4.3.1.3 VCC Lid Assembly Lift

The VCC (concrete cask) lid assembly is lifted using three threaded holes located on the top plate of the lid assembly. The threaded holes in the lid plate are 5/8-11 UNC-2B × 0.75 inch deep.

The adequacy of the lid assembly lift components is demonstrated by evaluating bolts and the threaded holes against the criteria in NUREG-0612 [8] and ANSI N14.6 [9]. For nonredundant systems, ANSI N14.6 requires that load-bearing members be capable of lifting six times the load without exceeding the yield strength of the material and 10 times the load without exceeding the ultimate tensile strength of the material. The lid assembly lift is evaluated as a nonredundant system.

The bounding weight of the lid assembly is 4,000 pounds. A 10% dynamic load factor is added. Therefore, the load per bolt is:

$$P = \frac{4000 \times 1.1}{6} = 1467 \text{ lb}$$

From Machinery's Handbook, 25th Edition [40], the tensile stress area of the bolt is:

$$A_t = 3.1416\left(\frac{E_s \min}{2} - \frac{0.16238}{n}\right)^2 = 0.2201 \text{ in.}^2$$ --------Tensile area of 5/8-11 UNC-2A for S_u over 100 ksi

where:

$E_{smin} = 0.5589$ Min. pitch dia. of external thrd for Class 2A [40]
$n = 11$ threads/inch

The tensile stress in the bolt is:

$$\sigma = P / A_t = \frac{1467}{0.2201} = 6665 \text{ psi}$$

The bolt material is not specified. The bolt material is defined to have as a minimum the ultimate tensile and yield strengths of SA-193 Grade B6. Using tensile allowables of 1.0 S_y and 1.0 S_u at a temperature of 300°F, the tensile stress of 967 psi results in factors of safety of:

$$(F.S.)_y = \frac{1.0 \times S_y}{\sigma} = \frac{1.0 \text{ x } 78{,}400 \text{ psi}}{6665 \text{ psi}} = 12 > 6$$

$$(F.S.)_u = \frac{1.0 \times S_u}{\sigma} = \frac{1.0 \text{ x } 101{,}500 \text{ psi}}{6665 \text{ psi}} = 15 > 10$$

where:

S_y	= 78.4 ksi = 78,400 psi	Yield strength, SA-193 Grade B6, 300°F
S_u	= 101.5 ksi = 101,500 psi	Ultimate strength, SA-193 Grade B6, 300°F

The bolt external threads are evaluated considering a 0.75-inch actual length of engagement in the 0.75-inch thick plate.

From the Machinery's Handbook [40], the shear area, A_s, for the bolt threads is calculated as:

$$A_s = 3.1416\, n\, L_e K_n \max\left[\frac{1}{2n} + 0.57735(E_s \min - K_n \max)\right]$$

$$= 3.1416(11)(0.75 \text{ in.})(0.546 \text{ in.})\left[\frac{1}{2(11)} + 0.57735(0.5589 \text{ in.} - 0.546 \text{ in.})\right]$$

$$= 0.7486 \text{ in}^2$$

where:

n = 11 threads per in,
L_e = 0.75-in. bolt thread engagement length
E_{smin} = 0.5589 Min. pitch dia. of external thrd for Class 2A [40]
K_{nmax} = 0.546 Max. minor dia. of internal thrd for Class 2B [40]

The shear stress, τ, in the bolt threads is calculated as:

$$\tau = \frac{F_y}{A_n} = \frac{1467 \text{ lb}}{0.7486 \text{ in}^2} = 1960 \text{ psi}$$

The bolt material is defined to have the minimum properties of SA-193 Grade B6. Using shear allowables of 0.6 S_y and 0.5 S_u (to meet NUREG criteria for critical lift) at a temperature of 300°F, the shear stress of 1,960 psi results in factors of safety of:

$$(F.S.)_y = \frac{0.6 \text{ x } 78{,}400 \text{ psi}}{1960 \text{ psi}} = 24 > 6$$

$$(F.S.)_u = \frac{0.5 \text{ x } 101{,}500 \text{ psi}}{1960 \text{ psi}} = 26 > 10$$

The lid plate internal threads are evaluated considering a 0.75-inch actual length of engagement in the 0.75- inch thick plate.

From the Machinery's Handbook [40], the shear area, A_n, in the structural lid bolt hole threads is calculated as:

$$\begin{aligned} A_n &= 3.1416\, n\, L_e D_s \min\left[\frac{1}{2n} + 0.57735(D_s \min - E_n \max)\right] \\ &= 3.1416(11)(0.75 \text{ in.})(0.6113 \text{ in.})\left[\frac{1}{2(11)} + 0.57735(0.6113 \text{ in.} - 0.5732 \text{ in.})\right] \\ &= 1.0687 \text{ in}^2 \end{aligned}$$

where:

n	=	11 threads per in,
L_e	=	0.75-in. bolt thread engagement length
$D_s$min	=	0.6113 in., Min.major dia. of class 2A bolt threads [40]
$E_n$max	=	0.5732 in., Max. pitch dia. of class 2B lid threads [40]

The shear stress, τ, in the lid plate bolt hole threads is calculated as:

$$\tau = \frac{F_y}{A_n} = \frac{1467 \text{ lb}}{1.0687 \text{ in}^2} = 1373 \text{ psi}$$

The concrete cask lid plate is constructed of A36 carbon steel. Using shear allowables of 0.6 S_y and 0.5 S_u (to meet NUREG criteria for critical lift) at a temperature of 300°F, the shear stress of 1373 psi results in factors of safety of:

$$(F.S.)_y = \frac{0.6 \text{ x } 31{,}800 \text{ psi}}{1373 \text{ psi}} = 14 > 6$$

$$(F.S.)_u = \frac{0.5 \text{ x } 58{,}000 \text{ psi}}{1373 \text{ psi}} = 21 > 10$$

where:

S_y	= 31.8 ksi	Yield strength, A 36 Carbon Steel, 300°F
S_y	= 58.0 ksi	Ultimate strength, A 36 Carbon Steel, 300°F

The criteria of NUREG-0612 and ANSI N14.6 for a nonredundant system are met. The bolt and plate materials are adequate. The 0.75-inch length of thread engagement is adequate.

Evaluation of Nelson Studs within Lid Assembly

The weight of the concrete portion of the lid assembly is transferred to the lid assembly top plate by eight Nelson studs. The ability of the Nelson studs to transfer load from the concrete to the plate is evaluated per ACI-349-85 [4].

The maximum pullout strength of the concrete (P_d) for a single Nelson stud is:

$$P_d = 4 \times \Phi \times \sqrt{f_c'} \times A_{cd} = 4 \times 0.85 \times \sqrt{3800} \times 47.67 = 9991 \text{ lb} \quad [4]$$

where:

Φ = 0.85 ---------- Strength reduction factor [4]

f_c' = 3,800 psi ---------- Concrete compression strength, 300°F,

$A_{cd} = \pi(l_e(l_e + d_h)) = \pi(3.32(3.32 + 1.25)) = 47.67 \text{ in}^2$

(Projected cone area of Nelson stud less head area)

$l_e = (h - h_h) = (3.69 - 0.375) = 3.32$ in-Effective length of Nelson Stud embedment

h = 3.69 in ----------Height of Nelson Stud

d = 0.75 in ----------Diameter of Nelson Stud

h_h = 0.375 in ----------Head Height of Nelson Stud

d_h =1.250 in ----------Head Diameter of Nelson Stud

The Nelson studs are evaluated considering a bounding maximum weight of 4,000 lbs. for the lid assembly. A 10% dynamic load factor is added. There are eight Nelson studs. A load factor of 1.4 for dead loads is applied per ACI-349-85 [4]. The geometry of the Nelson stud grouping is

such that the projected cones do not intersect or overlap each other. Therefore, the evaluation of a single Nelson stud is controlling.

The factored load (F) on a single Nelson stud is:

$$F = 1.1 \times 1.4 \times 4000 \text{ lb} / 8 \text{ studs} = 770 \text{ lb.}$$

The factor of safety for a single Nelson stud is:

$$FS = \frac{P_d}{F} = \frac{9991}{770} = 13$$

Allowable Stress in a Single Nelson Stud in the Lid Assembly

The maximum tensile stress within a Nelson stud, based on maximum factored load in a single Nelson stud is:

$$\sigma = \frac{F}{A_s} = \frac{770}{0.44} = 1750 \text{ psi} = 1.75 \text{ ksi}$$

where:

$$A_s = \frac{\pi}{4} d^2 = \frac{\pi}{4} 0.75^2 = 0.44 \text{ in}^2$$

The design tensile strength for embedment steel is based on a maximum steel stress of the lesser of ΦS_y or $0.8\ S_u$, where $\Phi = 0.9$ [4].

The properties of the Nelson stud material are:

S_y = 51.0 ksi--------Yield Strength, Mild Steel S3L Nelson stud
S_u = 65.0 ksi--------Ultimate Tensile Strength, Mild Steel S3L Nelson stud

$\Phi S_y = 0.9 \times 51.0$ ksi = 45.9 ksi and $0.8\ S_u = 0.8 \times 65.0 = 52.0$ ksi. Therefore,

$\Phi S_y = 0.9 \times 51.0$ ksi = 45.9 ksi is the maximum allowable embedment steel stress.

The factor of safety is:

$$FS = \frac{\phi S_y}{\sigma} = \frac{45.9}{1.75} = 26$$

Bearing Capacity of the Concrete under the Nelson Stud Head in the Lid Assembly

The Nelson studs meet the requirements of ACI-349-85 Section B.4.5.2 [4]; therefore, detailed evaluation of bearing capacity under the head is not required:

3.A.4.3.2 Canister Lift Evaluation

The adequacy of the canister lifting devices is demonstrated by evaluating the hoist rings, the canister structural lid, and the weld that joins the structural lid to the canister shell against the criteria in NUREG-0612 [8] and ANSI N14.6 [9]. The lifting configuration for the PWR canister consists of six hoist rings threaded into the structural lid at equally spaced angular intervals. The hoist rings are analyzed as a redundant system with two 3-legged lifting slings. For redundant lifting systems, ANSI N14.6 requires that load-bearing members be capable of lifting three times the load without exceeding the tensile yield strength of the material and five times the load without exceeding the ultimate tensile strength of the material. The canister lid is evaluated for lift conditions as a redundant system that demonstrates a factor of safety greater than three based on yield strength and a factor of safety greater than five based on ultimate strength. The canister lift analysis is based on a load of 84,400 lb, which bounds the weight of the heaviest loaded canister configuration, plus a dynamic load factor of 10 percent. Alternative canister lifting system designs may be used based on a site-specific analysis and evaluation.

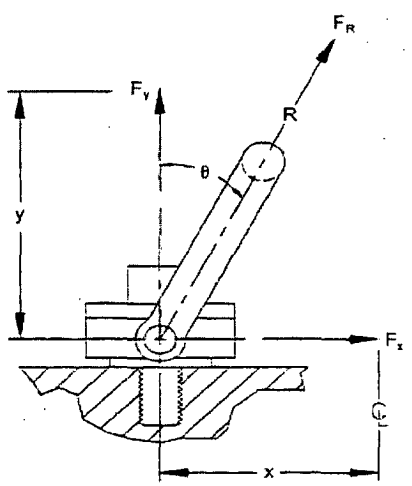

The vertical load on each hoist ring, F_y, assuming a 10% dynamic load factor, is:

$$F_y = \frac{84{,}400 \text{ lbs x } 1.1}{3 \text{ lift points}} = 30{,}950 \text{ lbs}$$

Assuming a maximum sling angle (θ) of 30°, the resultant load on the hoist ring is:

$$F_R = \frac{F_y}{\cos(\theta)} = \frac{30{,}950 \text{ lbs}}{\cos(30°)} = 35{,}738 \text{ lbs}$$

A maximum sling angle (θ) of 30° corresponds to a minimum sling length (R) of:

$$R = \frac{x}{\sin(\theta)} = \frac{25.0\,\text{in}}{\sin(30°)} = 50.0\,\text{in}$$

Which places the lift hook about 43.3 in (R×cos(θ) = 50.0in×cos(30°)) above the top of the canister.

Therefore, in order to use hoist rings to lift the canister, six hoist rings must be used, each with a rated capacity greater than 35,738 lbs (assuming a design safety factor of 5 on ultimate strength). The slings used to connect the hoist rings to the crane lift hook must have an ultimate strength greater than 178,690 lbs (5×35,738 lbs) each and have a length of at least 50.0 inches.

From the Machinery's Handbook [24], The shear area, A_n, in the structural lid bolt hole threads is calculated as

$$\begin{aligned} A_n &= 3.1416\,n\,L_e D\ \min\left[\frac{1}{2n} + 0.57735(D_s\min - E_n\max)\right] \\ &= 3.1416(4.5)(3.25\,\text{in.})(1.9751\,\text{in.})\left[\frac{1}{2(4.5)} + 0.57735(1.9751\,\text{in.} - 1.8681\,\text{in.})\right] \\ &= 15.69\,\text{in}^2 \end{aligned}$$

where:

n	=	4.5 UNC threads per in,
L_e	=	3.25-in. bolt thread engagement length
$D_s$min =		1.9751 in., minimum major diameter of class 2A bolt threads
$E_n$max =		1.8681 in., maximum pitch diameter of class 2B lid threads

The shear stress, τ, in the structural lid bolt hole threads is calculated as:

$$\tau = \frac{F_y}{A_n} = \frac{30{,}950\,\text{lb}}{15.69\,\text{in}^2} = 1{,}973\text{psi}$$

The canister structural lid is constructed of SA-240, Type 304L stainless steel. Using shear allowables of 0.6 S_y and 0.5 S_u at a temperature of 300°F, the shear stress of 1,973 psi results in factors of safety of:

$$(F.S.)_y = \frac{0.6 \text{ x } 22{,}400 \text{ psi}}{1{,}973 \text{psi}} = 6.8 > 3$$

$$(F.S.)_u = \frac{0.5 \text{ x } 66{,}200 \text{ psi}}{1{,}973 \text{psi}} = 16.8 > 5$$

The criteria of NUREG-0612 and ANSI N14.6 for a redundant system are met. Therefore, the 3.25-inch length of thread engagement is adequate.

The structural adequacy of the canister closure lid and weld is evaluated using a finite element model of the upper portion of the canister. As shown in Figure 3.A.4-1, the model represents one-half of the canister, including the lid.

Boundary conditions were applied to enforce symmetry at the boundary of the model (in the x-y plane). All nodes on the x-y symmetry plane were restrained perpendicular to the symmetry plane (UZ). To represent the points of lifting the canister the nodes at the location of the lift points were restrained in the Y direction (UY).

The weight of the basket and contents was applied as a pressure to the top surface of the canister bottom plate. The total weight applied (including 1.1 for the DLF) and a factor of ½ for the symmetry of the model was:

$$\text{Load} = \frac{1.1 \times (W_{\text{basket}} + 21 \times W_{\text{fuel assembly}})}{2} = \frac{1.1 \times (33{,}000 + 21 \times 1{,}700)}{2} = 37{,}785 \text{ pounds}$$

A static inertial acceleration of 1.1 g's was applied to the canister model to account for the weight of the canister with a 10% dynamic load factor, as shown modeled in Figure 3.A.4-1.

To evaluate the canister lid welds during lift conditions, nodal stress intensities are used. Stress results are compared to material allowables at a temperature of 300°F. For conservatism, the weld allowable is taken as the base material.

The maximum nodal stress intensity in the weld is 1,911 psi. The corresponding factors of safety are:

$$(F.S.)_{yield} = \frac{\text{yield strength}}{\text{maximum nodal stress intensity}} = \frac{22{,}400\ \text{psi}}{1{,}911\ \text{psi}} = 11.7\ (>6)$$

$$(F.S.)_{ultimate} = \frac{\text{ultimate strength}}{\text{maximum nodal stress intensity}} = \frac{66{,}200\ \text{psi}}{1{,}911\ \text{psi}} = 34.6\ (>10)$$

Therefore, the canister meets the criteria of NUREG-0612 and ANSI N14.6 for nonredundant systems.

3.A.4.3.3 Standard Transfer Cask Lift

The evaluation of the standard transfer cask presented here shows that the design meets NUREG-0612 [8] and ANSI N14.6 [9] requirements for nonredundant lift systems. The adequacy of the standard transfer cask is shown by evaluating the stress levels in all of the load-path components against the NUREG-0612 criteria.

3.A.4.3.3.1 Standard Transfer Cask Shell and Trunnion

The adequacy of the trunnions and the cask shell in the region around the trunnions during lifting conditions is evaluated in this section in accordance with NUREG-0612 and ANSI N14.6.

A three-dimensional finite element model is used to evaluate the lifting of a fully loaded UNITAD transfer cask. Because of symmetry, it was necessary to model only one-quarter of the UNITAD transfer cask, including the trunnions and the top forging ring at the trunnion region. The inner and outer shells, the bottom forging, the lead and the neutron shields between the inner and outer shells of the transfer cask are also modeled. SOLID45 (8-node brick element) is used to model the transfer cask. The trunnions are not fully welded to the top forging ring; therefore, CONTAI74 elements are used to connect the trunnion to the top forging ring. The 3/4-inch effective throat weld attaching the trunnion to the top forging ring at the inner surface of the cask is represented by coupled nodes between the two components, while the small groove weld attaching the trunnion to the outer surface of the top ring is neglected. The finite element model is shown in Figure 3.A.4.3.3-1.

The total weight of the heaviest loaded UNITAD transfer cask is less than 195,700 pounds. A load of 195,700 pounds, plus a 10% dynamic load factor, is used in the model. The load used in the quarter-symmetry model is (195,700 × 1.1)/4 = 53,900 pounds. The load is applied upward at the trunnion as a "surface pressure load" whose location is determined by the lifting yoke dimensions. The magnitude of the surface pressure load is calculated so that the total upward force is equal to the load of 53,900 pounds. The model is restrained along two planes of symmetry with symmetry boundary conditions. Vertical restraints are applied to the bottom of the model to resist the force applied to the trunnion.

Table 3.A.4.3.3-1 provides the tensile stress intensity summaries of the seven cross-sectional locations in the load path of the trunnion and top forging ring. The stresses are calculated based on the total nodal forces and moments over the selected cross-sectional areas. The maximum primary bending tensile stress, $P_m + P_b$, is used to compare with the stress acceptance criteria. Table 3.A.4.3.3-2 provides the stress summaries for locations in the inner shell, outer shell and bottom forging ring, with the maximum nodal stress intensity in each cask component. The maximum stress intensity, $P_m + P_b$, is used to compare with the tensile stress acceptance criteria.

The cross-section of the trunnion is circular. Two cross-sectional areas are examined as shown in Figure 3.A.4.3.3-2. For the portion of the trunnion extending beyond the cask body, the maximum bending stress occurs at the cross-section (x = 41.48 inches) nearest to the intersection with the top forging ring. The maximum stress occurs at the radial surface. At the surface, the stress intensity is equal to the tensile stress because the shear stress is zero. The tensile stress is the combination of the averaged axial stress, σ_x, and bending stress due to the moment about the Y-axis, M_y. The linearized bending stress in the trunnion is 2.35 ksi. Comparing the stress to the material (SA350 LF2) allowable yield and ultimate strength at 200°F, the factor of safety on yield strength is 14.0 (>6) and on ultimate strength is 29.7 (>10).

In the top forging ring, the five cross-sectional areas selected for stress examination are shown in Figure 3.A.4.3.3.-2. The maximum bending stress occurs at the radial cross-section (topring-A1) above the trunnion. The linearized bending stress through this cross-sectional area is 3.58 ksi. Comparing the stress to the material (SA350 LF2) allowable yield and ultimate strength at 200°F, the factor of safety on yield strength is 9.21 (>6) and on ultimate strength is 19.55 (>10).

In the inner shell, the maximum stress intensity occurs at the nodal location ($\theta = 0°$, z = 179.75 inches), which is outside the intersection just below the trunnion. The linearized stress intensity through the shell thickness is 0.35 ksi. Comparing the stress to the material (A588) allowable

yield and ultimate strength at 200°F, the factor of safety on yield strength is 135 (>6) and on ultimate strength is 200 (>10).

In the outer shell, the maximum stress intensity occurs at the nodal location (θ = 8.25°, z = 179.75 inches), which is outside the intersection just below the trunnion. The linearized stress intensity through the shell thickness is 1.6 ksi. Comparing the stress to the material (A588) allowable yield and ultimate strength at 200°F, the factor of safety on yield strength is 29.6 (>6) and on ultimate strength is 43.7 (>10).

In the bottom forging, the maximum stress intensity occurs at the nodal location (θ = 90°, z = 12 inches), which is outside the intersection just below the inner and outer shells. The linearized stress intensity through the ring thickness is 0.05 ksi. Comparing the stress to the material (SA-350 LF2) allowable yield and ultimate strength at 200°F, the factor of safety on yield strength is 660 (>6) and on ultimate strength is 1,400 (>10).

The inner 3/4-inch effective throat weld attaching the trunnion to the inner shell is evaluated by computing a stress intensity considering the geometry of the weld and the load induced on the coupled nodes representing the weld. The force acting on the weld was determined by using the nodal forces for the nodes representing the weld..

The stress intensity for the weld is:

$$\sigma = \sqrt{(\sigma_n)^2 + 4\tau^2} = \sqrt{(0)^2 + 4\times(0.06)^2} = 0.12 \text{ ksi}$$

where:

τ = P_s / A_s = 0.06 ksi ---------- the shear stress acting on the weld

P_s = 2 ×0.528 =1.1 kips ---------- shear force acting on the weld. Value is taken from the simulation results. Because of symmetry, half of the weld is modeled and the total shear force is two times the nodal forces for the weld.

A_s = $2\pi \times D \times r$ = 21.20 in ---------- shear area of the weld

D = 9 in ---------- diameter of the trunnion

h = 3.4 in ---------- effective throat of the weld

The acceptability of the weld is evaluated by comparing the allowable stress limits to the calculated weld stress intensity. The factor of safety (FS) based on the yield strength is:

$$FS = \frac{S_y}{\sigma} = \frac{33.0}{0.12} = 275 > 6$$

where:

S_y = 33.0 ksi ----------yield strength at 200°F for SA350 LF2

The factor of safety based on the ultimate strength is:

$$FS = \frac{S_u}{\sigma} = \frac{70.0}{0.12} = 583 > 10$$

where:

S_u = 70.0ksi ----------ultimate strength at 200°F for SA350 LF2

As shown in Table 3.A.4.3.3-1 and Table 3.A.4.3.3-2 and the calculation for the weld factor safety (see previous data), all stresses meet the NUREG-0612 and ANSI N14.6 criteria. The minimum factor of safety is 9.21; it occurs in the top forging ring.

3.A.4.3.3.2 Transfer Cask Shield Door Rails and Welds

This section demonstrates the adequacy of the transfer cask shield doors, door rails and welds in accordance with the guidelines provided in NUREG-0612 and ANSI N14.6. For the evaluation of the transfer cask, the criteria requires safety factors of 6 and 10 on yield and ultimate strengths of material, respectively.

The shield door rails support the weight of a wet, fully loaded canister and the shield doors. The shield doors are 5-inch thick plates that slide on the door rails. The rails are 7.50 inches wide × 52 inches long and are welded to the bottom ring of the transfer cask. The doors and the rails are constructed of SA350 LF2 steel.

A design weight of 121,000 pounds (110,000 × 1.1) is used to evaluate the rails. This weight bounds the weight of the heaviest loaded canister, the weight of the water in the canister, and the

weight of the shield doors and rails. The 10% dynamic load factor is included to ensure that the evaluation bounds all normal operating conditions.

Allowable stresses for the material are taken at 200°F, which bounds the maximum temperature of the transfer cask under normal conditions.

Lower Portion of Transfer Cask Body

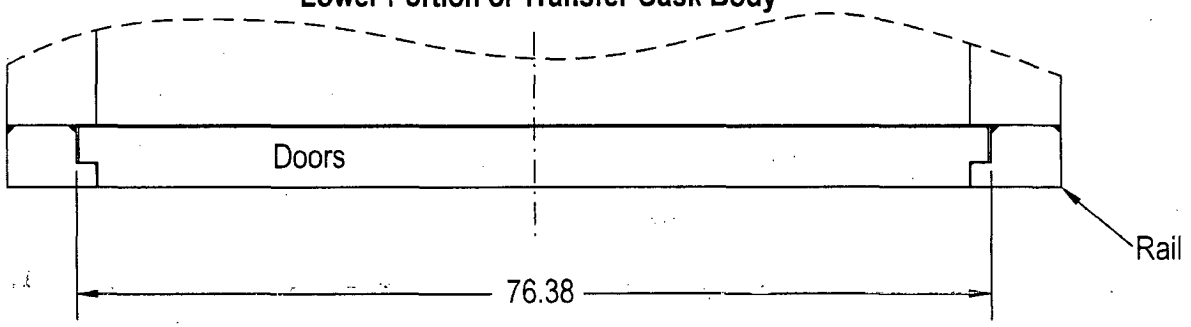

Rail Details

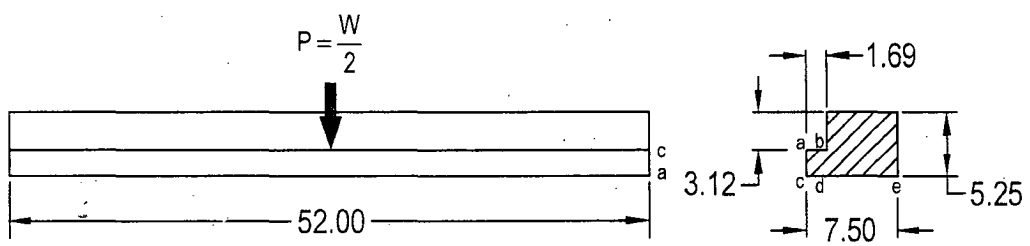

All Dimensions in Inches

Stress Evaluation for Door Rail

Each rail is assumed to carry one-half of the load as shown in the previous sketch.

The average shear stress in each door rail bottom plate (section b-d) due to the applied load is:

$$\tau = \frac{P}{A} = \frac{60.5}{110.8} = 0.55 \text{ ksi}$$

where:

$A = (5.25 - 3.12) \times 52 = 110.8 \text{ in}^2$ ---------- shear area

$P = W / 2 = 121 / 2 = 60.5$ kips ---------- half total weight

The bending stress in each rail bottom section b-d due to the applied load, P, is:

$$\sigma_b = \frac{6M}{Lt_{b\text{-}d}^{\,2}} = 2.6 \text{ ksi}$$

where:

$M = P \times L_{a\text{-}b} = 60.5 \times 1.69 = 102.25$ in-kip --- moment about point "b"

$L_{a\text{-}b} = 1.69$ in ---------- applied load moment arm, from edge of rail "a" to corner of the groove "b"

$L = 52$ in ---------- length of the rail

$t_{b\text{-}d} = 2.13$ in ---------- thickness of the rail

The maximum stress intensity in the bottom section of the rail is:

$$\sigma = \sqrt{(\sigma_b)^2 + 4\tau^2} = \sqrt{(2.6)^2 + 4 \times (0.55)^2} = 2.9 \text{ ksi}$$

The acceptability of the rail design is evaluated by comparing the allowable stress limits to the maximum calculated stresses. The factor of safety (FS) based on the yield strength is:

$$FS = \frac{S_y}{\sigma} = \frac{33.0}{2.9} = 11.3 > 6$$

where:

$S_y = 33.0$ ksi ---------- yield strength at 200°F for SA350 LF2

The factor of safety based on the ultimate strength is:

$$FS = \frac{S_u}{\sigma} = \frac{70.0}{2.9} = 24.13 > 10$$

where:

S_u = 70.0 ksi ---------- ultimate strength at 200°F for SA350 LF2

The rails meet the transfer cask criteria. Therefore, the rails are structurally adequate.

Stress Evaluation for the Shield Doors

The shield doors are 5-inches thick at the center and step down to 2.94-inches thick at the edges where they rest on the rails. The stepped edges of the two door leaves are designed to interlock at the center. Therefore, the doors are analyzed as a single simply supported plate. The engagement length of the door with the rail is 52 inches. The average shear stress at the edge of the shield door where the door contacts the rail is:

$$\tau = \frac{P}{A_S} = \frac{60.5}{152.9} = 0.4 \text{ ksi}$$

where:

$A_S = t_d \times L = 152.9 \text{ in}^2$ ---------- the total shear area

$t_d = 5.0 - 2.06 = 2.94$ in ---------- thickness of the door at edge

$L = 52.0$ in ---------- length of engagement at rail

The maximum bending stress, σ_b, at the center of the doors, is:

$$\sigma_b = \frac{Mc}{I} = \frac{9.69\times10^5 \times 2.5}{819} = 2.96 \text{ ksi}$$

where:

$M = \frac{Wl}{8} = \frac{110{,}000\times70.5}{8} = 9.69 \times 10^5$ in-lb --- the maximum moment, M, of a simply supported beam with uniform loading

$W = wl = 110{,}000$ lb ---------- total weight

$l = 70.5$ in ---------- span length

$h = 5$ in ---------- height of door

$$c = \frac{h}{2} = 2.5$$ ---------- distance to outer fiber

$$I = \frac{bh^3}{12} = 819 \text{ in}^4$$ ---------- moment of inertia

$$b = 39.81 \times 2 - 0.945 = 78.68 \text{ in}$$ ---------- treating both doors as a single beam

The maximum stress intensity in the door is:

$$\sigma = \sqrt{(\sigma_b)^2 + 4\tau^2} = \sqrt{(2.96)^2 + 4\times(0.4)^2} = 3.07 \text{ ksi}$$

The acceptability of the door design is evaluated by comparing the yield and ultimate strengths to the calculated stress intensity. The factor of safety based on the yield strength is:

$$FS = \frac{S_y}{\sigma} = \frac{33.0}{3.07} = 10.7 > 6$$

where:

S_y = 33.0 ksi ---------- yield strength at 200°F for SA350 LF2

The factor of safety based on the ultimate strength is:

$$FS = \frac{S_u}{\sigma} = \frac{70.0}{3.07} = 22.8 > 10$$

where:

S_u = 70.0 ksi ---------- ultimate strength at 200°F for SA350 LF2

The doors meet the lift criteria. Therefore, the doors are structurally adequate.

Door Rail Weld Evaluation

The door rails are attached to the bottom ring of the transfer cask by 0.75-inch partial penetration bevel groove welds. The loaded canister weight is conservatively assumed to act at a point on the inside edge of the rail. The outer weld follows the arc of the bottom ring on the outside, and the inner weld extends the length of each door rail on the inside. The outer weld forms an arc and the inner weld is straight. Both welds enclose an area as shown in the following sketch.

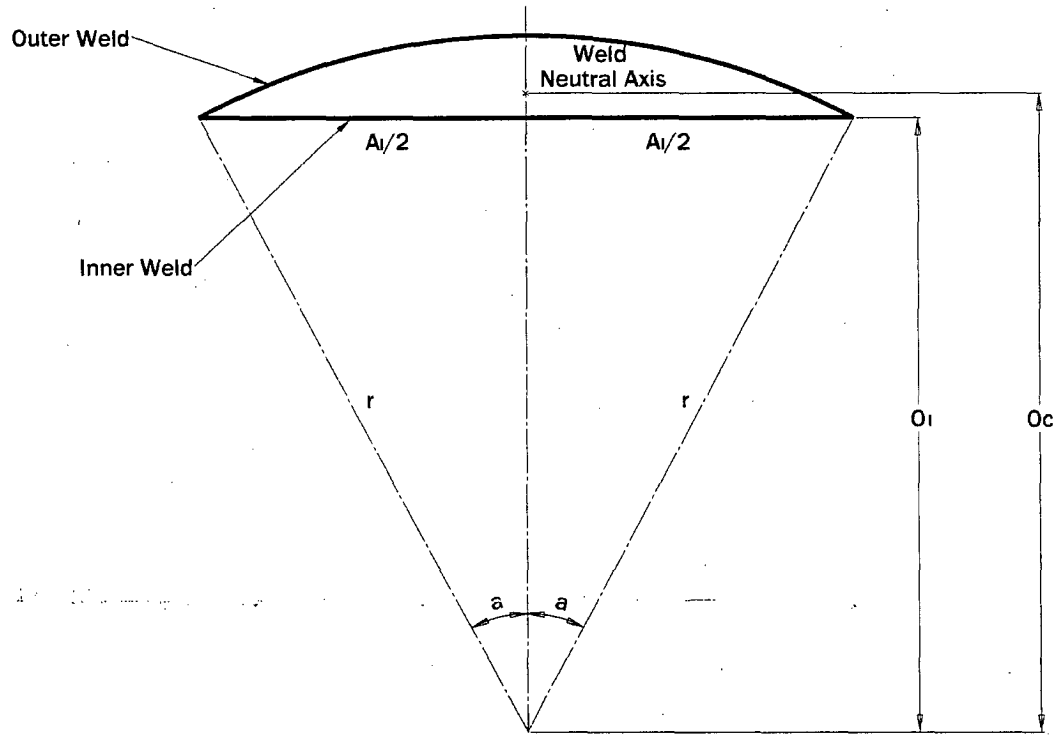

Key Parameters:

P	= 60.5 kip ----------	load in a single rail
D	= 82.5 in ----------	bottom ring outer diameter
t	= 0.75 in ----------	weld thickness
w	= 7.5 - 1.69 = 5.81 in-----	door rail top section width, which is the distance between the inside of the inner weld and the outside of the outer weld at the center of the weld

Weld Properties:

Each weld is treated as a line and the properties are calculated using the mid weld location.

r	= D/2 - t/2 = 40.87 in ----------	outer weld radius
O_i	= D/2 - w + t/2 = 35.81 in ----------	inner weld offset
A_i	$= 2 (r^2 - O_i^2)^{1/2} = 39.40$ in ----------	inner weld area
a	= Acos(O_i / r) = 0.5028 rad ----------	outer weld half angle
O_o	= r Sin(a) / a = 39.17 in ----------	outer weld offset

(Tuma [45], section 21.09, sub-section (2))

A_o	= 2 r a = 41.10 in ----------	outer weld area

I_o $= (a + \text{Sin}(a)\ \text{Cos}(a) - 2\ \text{Sin}^2(a) / a)\ r^3$

$= 94.12\ \text{in}^3$ ---------- outer weld inertia

(Tuma [45],, section 21.09, sub-section (3))

O_c $= (A_i\ O_i + A_o\ O_o) / (A_i + A_o) = 37.53$ in --- combined weld offset

A_c $= A_i + A_o = 80.50$ in ---------- combined weld area

I_c $= I_o + A_o(O_o - O_c)^2 + A_i(O_i - O_c)^2 = 321.11\ \text{in}^3$ combined weld inertia

C_i $= O_c - O_i + t/2 = 2.09$ in ---------- inner weld offset from weld neutral axis

Z_c $= I_c / C_i = 153.62\ \text{in}^2$ ---------- inner weld section modulus

M $= P\ (1.69 + C_i) = 228.7$ kip-in ---------- moment about weld neutral axis

The vertical load, P, exerts tensile load on both the inner weld and the outer weld. The moment, M, exerts tensile load on the inner weld and compressive load on the outer fiber of the outer weld. Therefore, the inner weld stress is bounding since the exerted stresses are both tensile and additive.

S_P $= P / A_c = 60.5 / 83.23 = 0.75$ kip/in ------- weld stress (per inch) due to P

S_M $= M / Z_c = 228.7 / 153.62 = 1.48$ kip/in --- weld stress (per inch) due to M

S_C $= S_P + S_M = 0.75 + 1.48 = 2.24$ kip/in ----- combined weld stress (per inch)

S $= S_C / t = 2.24 / 0.75 = 2.98$ ksi ---------- combined weld stress

FS $= S_y / S = 33.0 / 2.98 = 11 > 6$ ---------- factor of safety for yield strength

where $S_y = 33.0$ ksi ---------- yield strength at 200°F for SA350 Type LF2 Steel

FS $= S_u / S = 70.0 / 2.98 = 23.4 > 10$ ---------- factor of safety for ultimate strength

where $S_u = 70.0$ ksi ---------- ultimate strength at 200°F for SA350 Type LF2 Steel

3.A.4.3.3.3 Inadvertent Lift of Transfer Cask by TSC

The purpose of the retaining block is to prevent inadvertent lifting of the Canister out of the transfer cask. In the event the transfer cask is lifted by the Canister instead of by the transfer cask trunnions, the weight of the transfer cask is supported by the three 17-4 PH stainless steel retaining blocks mounted on top of the transfer cask top ring. In this case, the retaining block must have sufficient strength to support the weight of the transfer cask. The locations of the three retaining blocks on the top ring are illustrated in the following sketch.

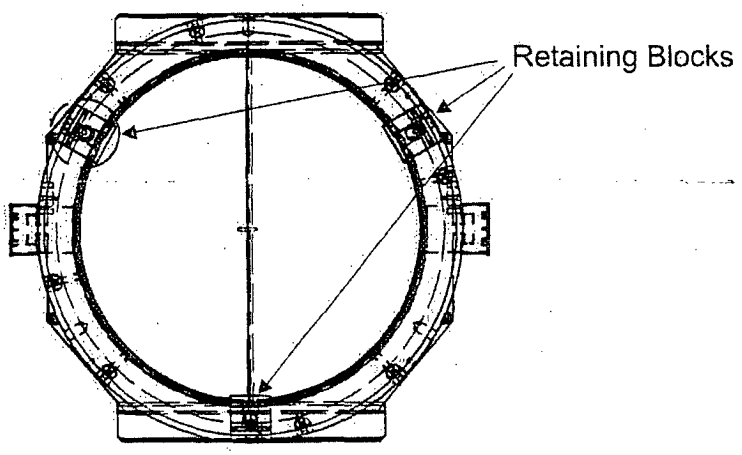

An inadvertent lift of the transfer cask by the Canister is an ASME Service Level C condition. The allowable stresses based on ASME Code, Section III for the Service Level C condition is used in this analysis. The temperature of the cask at the top is less than 200°F. A temperature of 200°F is assumed for allowable stress limits.

A finite element model is made in ANSYS to analyze the stresses in the components of the retaining block assembly. This model is a solid model of a section of the retaining block. A picture of the model is shown in Figure 3.A.4.3.3-3. The model uses SOLID45 brick elements for the retaining block top ring and retaining pin. Gap elements (CONTA174) connect the retaining block to the retaining pin head. Gap elements are also used between the retaining block and top ring and between the retaining pin and top ring. The model is constrained by restraining the base of the retaining pin and top ring and by restraining the ends of the top ring to not displace in the angular direction.

The block is loaded by the weight of the transfer cask. Therefore, the load required on the one-half symmetry model is:

$$\text{Load} = \frac{W_{TFR} \times DLF}{2 \times N} = 18{,}080 \text{ lbs}$$

where:

W_{TFR} = weight of the transfer cask = 98,600 lbs.
DLF = dynamic load factor = 1.1
N = number of retaining blocks = 3

The model is loaded by applying a pressure force to the bottom side of the retaining block equal to the required load divided by the area of the elements that are loaded. The elements that are inside the canister radius are loaded.

Linearized section stresses through the section shown in Figure 3.A.4.3.3-4 are calculated for the block and pin. This section was chosen as it gives the highest linearized stress through the component and therefore gives a bounding result for the average section stress.

The allowable value for membrane stresses in the retaining block and retaining pin are given as:

$S_{allow} = 1.5S_{m1} = 1.5(45) = 67.5$ ksi ---------- Retaining block
$S_{allow} = 1.5S_{m2} = 1.5(23.2) = 34.8$ ksi ---------- Retaining pin

The allowable value for membrane plus bending stresses in the retaining block and pin are:

$S_{allow} = 1.5(1.5)\ S_{m1} = 2.25(45) = 101.25$ ksi ---------- Retaining block
$S_{allow} = 1.5(1.5)\ S_{m2} = 2.25(23.2) = 52.2$ ksi ---------- Retaining pin

where:

S_{m1} = Design stress intensity at 200°F for SA-693/564 Stainless Steel = 45 ksi
S_{m2} = Design stress intensity at 200°F for SA-516 Stainless Steel = 23.2 ksi

Stresses at Section R1 and R2 in the retaining block and Sections P1 and P2 in the pin (see 3.A.4.3.3-4) are computed using nodal forces from the ANSYS solution. Section R2 in the retaining block is checked analytically using the theoretical bending moment at the section. At cross-sections R1 and R2, the moments are 70.5 and 49.2 in-kips, respectively, and the bending stresses induced by these moments are 63.7 and 53.0 ksi at Sections R1 and R2, respectively. The stress at Section R1 controls, but R2 is included in the evaluation in order to check results at the minimum net section.

Membrane and membrane plus bending stresses are summarized in the following table for the retaining block and pin.

Location (Note 1)	Part	P_m ksi	P_b Ksi	$P_m + P_b$ ksi	Material Spec.	Allowable P_m Stress ksi	Allowable $P_m + P_b$ Stress ksi	F.S. for P_m Stress	F.S. for $P_m + P_b$ Stress
Retainer - R1	Retaining Block	0.0001	63.14	63.14	17-4 PH	67.5	101.25	1.07	1.60
Retainer – R2	Retaining Block	0.0001	53.0	53.0	17-4 PH	67.5	101.25	1.27	1.91
Pin - P1	Pin - Neck	22.9	9.12	32.01	SA516 Gr-70	34.8	52.2	3.81	1.63
Pin - P2	Pin - Base	10.16	0.31	10.48		34.8	52.2	112.2	4.98

Note 1: Sections are defined in Figure 3.A.4.3.3-4

The bearing force on the ring is calculated in the ANSYS model as 24,410 pounds. This force is distributed over that portion of the pin head in contact with the retaining block. Conservatively approximating the bearing area as half the area of the underside of the head, the bearing stress is:

$$S = \frac{F}{A} = \frac{24410 \times 2}{1.963} = 24.9\,\text{ksi}$$

D = 3 in ---------- Outer diameter of pin head

d = 2 in ---------- Outer diameter of pin

$$A = \frac{\pi(D^2 - d^2)}{4 \times 2} = \frac{\pi(3^2 - 2^2)}{4 \times 2} = 1.963$$ ------- Bearing area of the pin head

This gives a safety factor of:

$$FS = \frac{S_y}{S} = \frac{97.1}{24.9} = 3.89 > 1$$

where:

S_y = 97.1 ksi ---------- yield strength at 200°F for 17-4 PH

The retaining pin is welded to the top ring forging at the base. The forces acting on the weld were determined by using the nodal forces at weld. Due to symmetry of the model, the total forces acting on the weld are equal to two times the sum of the nodal values.

For SA516 Grade steel material:

$S_y = 34.8$ ksi
$S_u = 70.0$ ksi
$S_m = 23.2$ ksi

The allowable stresses are:

$S_{_shear} = 18.0$ ksi shear stress allowable

$\tau = P_s / A = 10.2$ ksi ---------- Shear stress acting on the weld

$P_s = 2 \times 35.918 = 71.84$ kips ---------- Shear force acting on the weld. Value is taken from the results. Because of symmetry, half of the weld is modeled and the total shear force is two times the nodal forces for the weld.

$A = 2 \times \pi \times h \times r = 7.06\ in^2$ ---------- Shear area of the weld

$r = 1.5$ in ---------- Radius of the retaining pin

$h = 3/4$ in ---------- Effective throat of the weld

$$FS = \frac{S_{shear}}{\tau} = \frac{18.0}{10.2} = 1.76 > 1$$

The factors of safety for all parts in the load path of the retaining assembly are greater than unity. The smallest factor of safety is 1.07 > 1. Therefore, the design of the retaining assembly meets the structural requirements of the ASME Code, Section III.

Figure 3.A.4.3.3-1 Finite Element Model for the Vertical Lifting Analysis

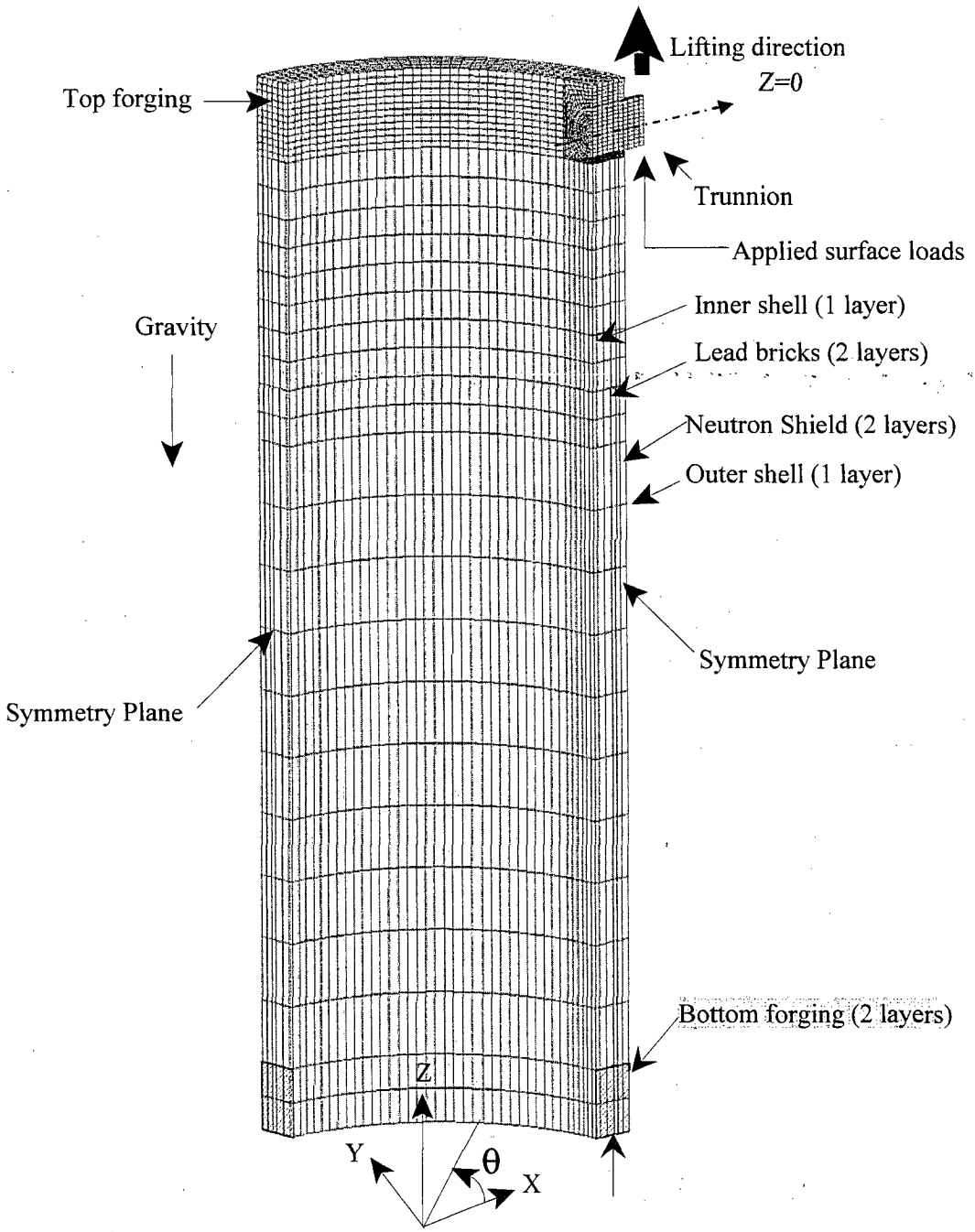

Figure 3.A.4.3.3-2 Definition of Stress Cross-Sections on the Top Ring

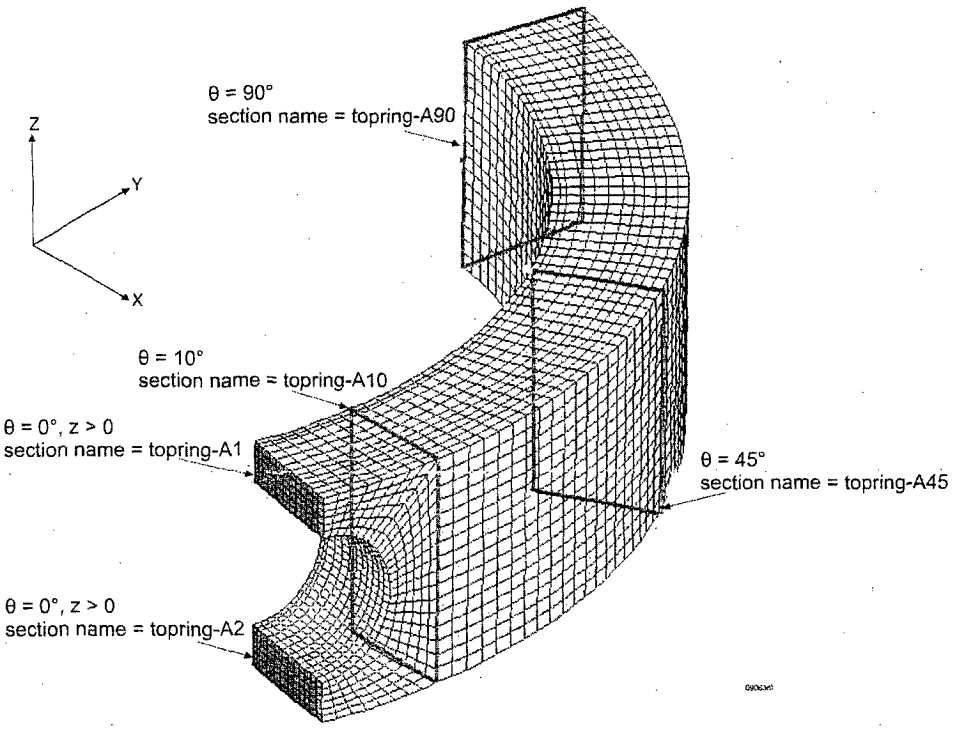

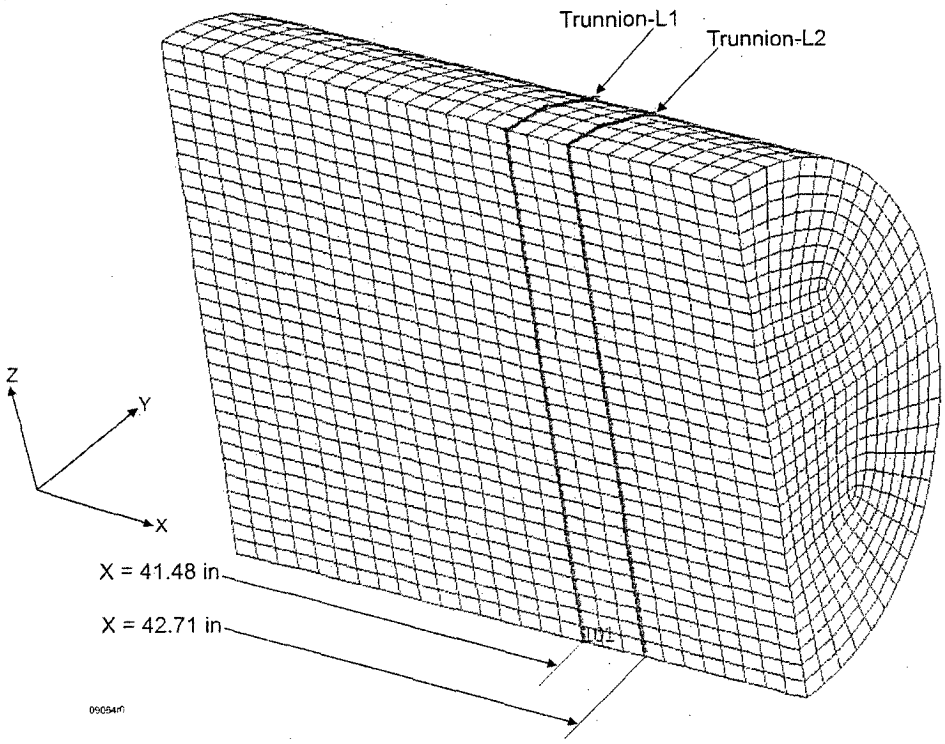

Figure 3.A.4.3.3-3 Retaining Block ANSYS Model for Evaluation of Inadvertent Canister Lift

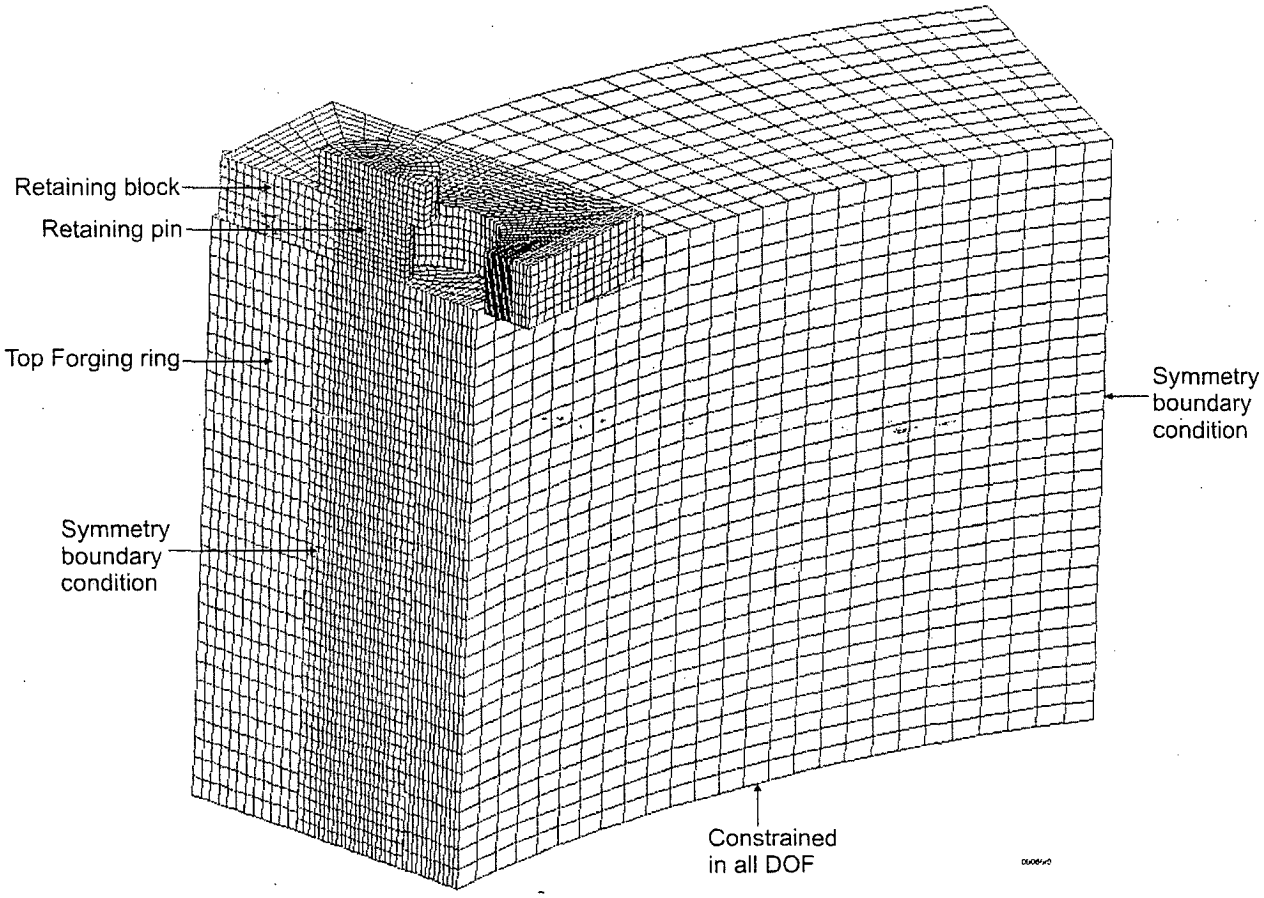

Figure 3.A.4.3.3-4 Linearized Section Stresses of Retaining Block

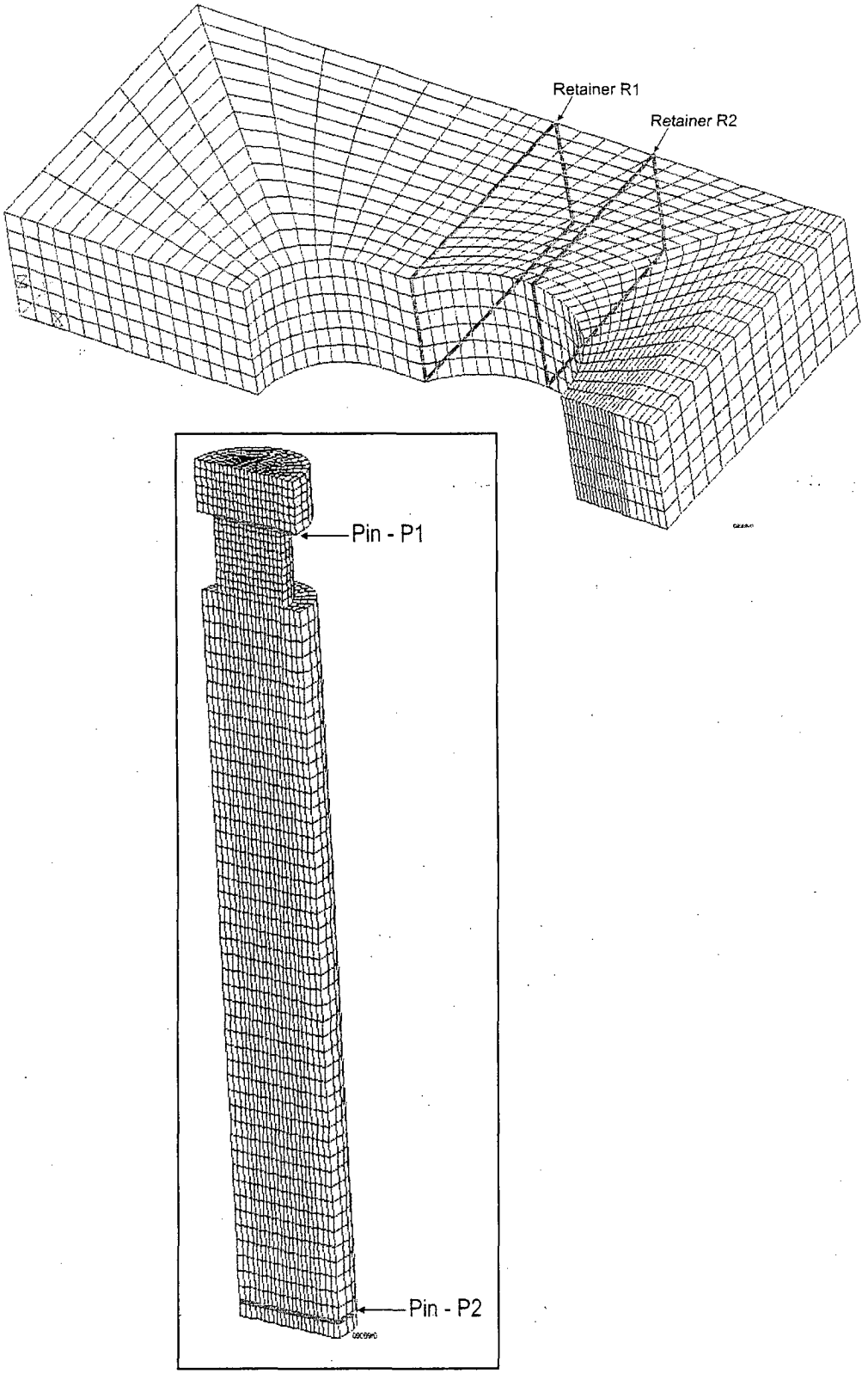

Table 3.A.4.3.3-1 Primary Stress Intensities in the Trunnions and the Top Ring

Location (note 1)	Position Coord	P_m ksi	P_b Ksi	$P_m + P_b$ ksi	Material Spec.	Allowable Yield Strength, ksi	Allowable Ultimate Strength, ksi	F.S. for Yield Stress	F.S. for Ultimate Stress
Trunnion-L1	x =41.48. in	0.001	2.35	2.35	SA350 LF2	33.0	70.0	14.0	29.7
Trunnion-L2	x = 42.71 in	0.0007	0.95	0.95		33.0	70.0	34.7	73.6
Top Ring-A1	$\theta = 0°, z > 0$	2.5	1.08	3.58	SA350 LF2	33.0	70.0	9.21	19.55
Top Ring-A2	$\theta = 0°, z < 0$	0.12	0.68	0.81		33.0	70.0	40.74	86.4
Top Ring-A11	$\theta = 11°$	0.72	0.56	0.63		33.0	70.0	52.3	111.1
Top Ring-A45	$\theta = 45°$	0.10	0.39	0.5		33.0	70.0	66	140
Top Ring-A90	$\theta = 90°$	0.10	0.5	0.60		33.0	70.0	55	116.66

Note: 1. The locations are defined in Figure 3.A.4.3.3-2

Table 3.A.4.3.3-2 Primary Membrane Plus Bending Stress Intensities in the Outer Shell, the Inner Shell and the Bottom Ring

Location (note 1)	Position Coord	$P_m + P_b$ ksi	Material Spec.	Allowable Yield Strength, ksi	Allowable Ultimate Strength, ksi	F.S. for Yield Stress	F.S. for Ultimate Stress
Inner Shell	$\theta = 0°$, z= 179.75 in	0.35	A588	47.5	70.0	135	200
Outer Shell	$\theta = 8.25°$, z= 179.75 in	1.6		47.5	70.0	29.6	43.7
Bottom Ring	$\theta = 90°$, z= 12 in	0.05	SA350 LF2	33.0	70.0	660	1400

Note: 1. The positions correspond to the axis shown in Figure 3.A.4.3.3-1

THIS PAGE INTENTIONALLY LEFT BLANK

3.A.5 Structural Evaluation of the UNITAD Storage System for Normal Conditions of Storage

Due to the similarity of the systems, the structural evaluation of the UNITAD Storage System evaluation using individual finite element models for the fuel basket, Canister and Vertical Concrete Cask will follow the methodology used in the NAC-UMS® FSAR. Because the individual components are free to expand without interference, the structural finite element models need not be connected.

3.A.5.1 Canister and Basket Analyses

3.A.5.1.1 Canister Thermal Stress Analysis

A three-dimensional finite element model of the Canister was constructed using ANSYS SOLID45 elements. By taking advantage of the symmetry of the Canister, the model represents one-half (180° section) of the Canister including the canister shell, bottom plate, structural lid and shield lid. The three-dimensional finite element model of the Canister used in the thermal stress evaluation is shown in Figure 3.A.5-1.

The model is constrained in the Z-direction for all nodes in the plane of symmetry. For the stability of the solution, one node at the center of the bottom plate is constrained in the Y-direction, and a node at the centerline of the canister lid is constrained in the X-direction. The directions of the coordinate system are shown in Figure 3.A.5-1.

The finite element thermal stress analysis is performed with canister temperatures that envelope the canister temperature gradients for off-normal storage (106°F and -40°F ambient temperatures) and transfer conditions for all canister configurations. Prior to performing the thermal stress analysis, the steady-state temperature distribution is determined using temperature data from the storage and transfer thermal analyses (Appendix 4.A). This is accomplished by converting the SOLID45 structural elements of the canister model to SOLID70 thermal elements and using the material properties from the thermal analyses. Nodal temperatures are applied at 10 key locations for the steady-state heat transfer analysis.

The temperatures (°F) at the key locations are:

Location	Temperature (°F)
Top center of closure lid (A)	220
Top OD of closure lid (C)	200
Bottom center of the closure lid (B)	225
Bottom center of the bottom plate (J)	265
Bottom outer diameter of the bottom plate (I)	230
25% elevation of the canister shell (G)	335
Bottom OD of the closure lid (D)	200
Top of bottom plate OD (H)	235
50% elevation of the canister shell (F)	370
75% elevation of the canister shell (E)	325

Temperatures used for determining allowable stress values were selected to envelope the maximum temperatures experienced by the canister components during storage and transfer conditions.

The resulting maximum (secondary) thermal stresses in the Canister are summarized in Table 3.A.5-1. The sectional stresses at 15 axial locations are obtained for each angular division of the model (a total of 35 angular locations for each axial location). Material allowables are determined based on the maximum temperature along the section for each axial location. The locations of the stress sections are shown in Figure 3.A.5-2. After solving for the canister temperature distribution, the thermal stress analysis was performed by converting the SOLID70 elements back to SOLID45 structural elements.

3.A.5.1.2 Canister Dead Weight Load Analysis

The Canister is structurally analyzed for dead weight load using the finite element model described in Section 3.A.5.1.1. The canister temperature distribution discussed in Section 3.A.5.1.1 is used in the dead load structural analysis to evaluate the material properties at temperature. The fuel and fuel basket assembly contained within the Canister are not explicitly modeled, but are included in the analysis by applying a uniform pressure load representing their combined weight to the top surface of the canister bottom plate. The nodes on the bottom surface of the bottom plate are restrained in the axial direction in conjunction with the constraints described in Section 3.A.5.1.1 to simulate the Canister resting on the pedestal plate of the

concrete cask. The evaluation is based on the weight of the longer Canister, which has the highest weight, and the boundary length of the PWR canisters. An acceleration of 1g is applied to the model in the axial direction (Y) to simulate the dead load.

The resulting maximum canister dead load stresses are summarized in Table 3.A.5-2 and Table 3.A.5-3 for primary membrane and primary membrane plus bending stresses, respectively. The sectional stresses at 15 axial locations are obtained for each angular division of the model (a total of 35 angular locations for each axial location). The locations for the stress sections are shown in Figure 3.A.5-2.

Before the closure lid is welded to the canister shell, it is supported by four lifting lugs, which are evaluated for the dead load condition using classical methods. The lifting lug, which is made of ASME SA-240 Type 304 stainless steel, is welded to the inner surface of the canister shell to support the lid. For conservatism, a temperature of 400°F, which is higher than the anticipated temperature at this location, is used to determine the material allowable stress. The total weight, W, imposed on the lid support ring is bounded by a weight of 8,000 pounds. A 10% load factor is also applied to ensure that the analysis bounds all normal operating loads. The stresses on the lifting lug are the bearing stresses and shear stresses at its weld to the canister shell.

The bearing stress $\sigma_{bearing}$ is:

$$\sigma_{bearing} = \frac{W}{area} = \frac{8{,}800\ \text{lb}}{7.6\ \text{in}^2} = 1.2\ \text{ksi}$$

where:

$$W = (8{,}000\ \text{lb}) \times 1.1 = 8{,}800\ \text{lb}$$

$$\text{Area} = 4\ \text{lugs} * 1.25*(2.02-0.5) = 7.6\ \text{in}^2$$

The yield strength, S_y, for Type 304 stainless steel = 20.7 ksi at 400°F. The allowable bearing stress is 1.0 S_y per ASME Code, Section III, Subsection NB. The acceptability of the lifting lug design is evaluated by comparing the allowable stresses to the maximum calculated stress:

$$MS = \frac{20.7\ \text{ksi}}{1.2\ \text{ksi}} - 1 = +\text{Large}$$

Therefore, the support ring is structurally adequate.

The attachment weld for the lid support ring is a 3/8-in. partial penetration bevel groove weld. The total shear force on the weld is considered to be the weight of the closure lid. The total

effective area of each weld is $A_{eff} = \{4\times2\times(5.4in+1.25in)\}\times0.375in = 20.0\ in^2$. The average shear stress in the weld is:

$$\sigma_w = \frac{W}{A_{eff}} = \frac{8{,}800\ lb}{20.0\ in^2} = 440\ psi$$

The allowable stress on the weld is 0.30 × the nominal tensile strength of the weld material [23]. However, for conservatism, S_u for the base metal at 400°F is used. The acceptability of the lifting lug weld is evaluated by comparing the allowable stress to the maximum calculated stress:

$$MS = \frac{0.3\times64{,}000\ psi}{440\ psi} - 1 = +Large$$

Therefore, the lifting lug weld is structurally adequate.

3.A.5.1.3 Canister Maximum Internal Pressure Analysis

The Canister is structurally analyzed for a maximum internal pressure load using the finite element model and temperature distribution and restraints described in Section 3.A.5.1.1. A maximum internal pressure of 15 psig is applied as a surface load to the elements along the internal surface of the canister shell, bottom plate and lid. This pressure bounds the calculated pressure that occurs in either canister under normal conditions.

The resulting maximum canister stresses for maximum internal pressure load are summarized in Table 3.A.5-4 and Table 3.A.5-5 for primary membrane and primary membrane plus primary bending stresses, respectively. The sectional stresses at 15 axial locations are obtained for each angular division of the model (a total of 35 angular locations for each axial location). The locations of the stress sections are shown in Figure 3.A.5-2.

3.A.5.1.4 Canister Handling Analysis

The canister is structurally analyzed for handling loads using the finite element model and conditions described in Section 3.A.5.1.1. Normal handling is simulated by restraining the model at nodes on the structural lid simulating three lift points and applying a 1.1g acceleration, which includes a 10% dynamic load factor, to the model in the axial direction. The Canister is lifted at six points; however, a three-point lifting configuration is conservatively used in the handling analysis. Since the model represents a one-half section of the Canister, the three-point lift is simulated by restraining two nodes 120° apart (one node at the symmetry plane and a

second node 120° from the first) along the bolt diameter at the top of the structural lid in the axial direction. Additionally, the nodes along the centerline of the lids and bottom plate are restrained in the radial direction, and the nodes along the symmetry face are restrained in the direction normal to the symmetry plane.

The maximum stresses during Canister handling occur for the heaviest weight canister. Therefore, this analysis bounds all handling configurations.

The resulting maximum stresses in the canister are summarized in Table 3.A.5-6 and Table 3.A.4-7 for primary membrane and primary membrane plus primary bending stresses, respectively. The sectional stresses at 15 axial locations are obtained for each angular division of the model (a total of 35 angular locations for each axial location). The locations of the stress sections are shown in Figure 3.A.5-2.

3.A.5.1.5 Canister Load Combinations

The Canister is structurally analyzed for varying combinations of thermal, dead weight, maximum internal pressure and handling loads using the finite element model and the conditions described in Section 3.A.5.1.1. Loads are applied to the model as discussed in Sections 3.A.5.1.1 through 3.A.5.1.4. A maximum internal pressure of 15.0 psi is used in conjunction with a positive axial acceleration of 1.1g. Two nodes 120° apart (one node at the symmetry plane and a second node 120° from the first) are restrained along the bolt diameter at the top of the closure lid in the axial direction. Additionally, the nodes along the symmetry face are restrained in the direction normal to the symmetry plane.

The resulting maximum stresses in the canister for combined loads are summarized in Table 3.A.5-8 through Table 3.A.5-13 for primary membrane, primary membrane plus primary bending, and primary plus secondary stresses, respectively. The sectional stresses at 15 axial locations are obtained for each angular division of the model (a total of 35 angular locations for each axial location). The locations for the stress sections are shown in Figure 3.A.5-2.

As shown in Table 3.A.5-8 through Table 3.A.5-13, the Canister maintains positive margins of safety for the combined load conditions.

3.A.5.1.6 Canister and Basket Fatigue Evaluation

The purpose of this section is to evaluate whether an analysis for cyclic service is required for the UNITAD Storage System components. The requirements for analysis for cyclic operation of components designed to ASME Code criteria are presented in ASME Section III, Subsection NB-3222.4 [5] for the Canister and Subsection NG-3222.4 [6] for the fuel basket. Guidance for components designed to AISC standards is in the Manual of Steel Construction, Table A-K4.1 [23].

During storage conditions, the Canister is housed in the Vertical Concrete Cask (VCC). The VCC is a shielded, reinforced concrete overpack designed to hold a Canister during long-term storage conditions. The VCC is constructed of a thick inner steel shell surrounded by 28 inches of reinforced concrete. The VCC inner shell is not subjected to cyclic mechanical loading. Thermal cycles are limited to changes in ambient air temperature. Because of the large thermal mass of the VCC and the relatively minor changes in ambient air temperature (when compared to the steady-state heat load of the cask contents), fatigue as a result of cycles in ambient air is not significant, and no further fatigue evaluation of the inner shell is required.

ASME criteria for determining whether cyclic loading analysis is required are comprised of six conditions, which, if met, preclude the requirement for further analysis:

1. Atmospheric to Service Pressure Cycle
2. Normal Service Pressure Fluctuation
3. Temperature Difference — Startup and Shutdown
4. Temperature Difference — Normal Service
5. Temperature Difference — Dissimilar Materials
6. Mechanical Loads

Evaluation of these conditions follows.

Condition 1 — Atmospheric to Service Pressure Cycle

This condition is not applicable. The ASME Code defines a cycle as an excursion from atmospheric pressure to service pressure and back to atmospheric pressure. Once sealed, the canister remains closed throughout its operational life and no atmospheric to service pressure cycles occur.

Condition 2 — Normal Service Pressure Fluctuation

This condition is not applicable. The condition establishes a maximum pressure fluctuation as a function of the number of significant pressure fluctuation cycles specified for the component, the design pressure, and the allowable stress intensity of the component material. Operation of the canister is not cyclic, and no significant cyclic pressure fluctuation is anticipated.

Condition 3 — Temperature Difference — Startup and Shutdown

This condition is not applicable. The UNITAD Storage System is a passive, long-term storage system that does not experience cyclic startups and shutdowns.

Condition 4 — Temperature Difference — Normal and Off-Normal Service

The ASME Code specifies that temperature excursions are not significant if the change in ΔT between two adjacent points does not experience a cyclic change of more than the quantity:

$$\Delta T = \frac{S_a}{2E\alpha} = 56°F,$$

where, for Type 304 stainless steel,

S_a = 28,200 psi, the value obtained from the fatigue curve for service cycles $< 10^6$,
E = 26.5×10^6 psi, modulus of elasticity at 400 °F,
α = 9.5×10^{-6} in./in.-°F.

Because of the large thermal mass of the canister and the concrete cask and the relatively constant heat load produced by the canister's contents, cyclic changes in ΔT greater than 56°F will not occur.

Condition 5 — Temperature Difference Between Dissimilar Materials

The Canister and its internal components contain several materials. However, the design of all components considers thermal expansion, thus precluding the development of unanalyzed thermal stress concentrations.

Condition 6 — Mechanical Loads

This condition does not apply. Cyclic mechanical loads are not applied to the Vertical Concrete Cask and Canister during storage conditions. Therefore, no further cyclic loading evaluation is required.

The criteria in ASME Code Subsections NB-3222.4 and NG-3222.4 are met and no fatigue analysis is required.

3.A.5.1.7 Canister Pressure Test

The Canister is designed and fabricated to the requirements of ASME Code, Subsection NB, to the extent possible. A 35 psia (35 – 14.7 = 20.3 psig) hydrostatic pressure test is performed in accordance with the requirements of ASME Code Subsection NB-6220 [5]. The pressure test is performed after the shield lid-to-canister shell weld is completed. The test pressure slightly exceeds 1.25 × design pressure (1.25 × 15 psig = 18.75 psig). Considering head pressure for the tallest canister (193.00 × 0.036 = 6.9 psig), the maximum canister pressure developed during the pneumatic pressure test is bounded by using 27.2 psig in the structural evaluation for the canister test pressure.

The ASME Code requires that the pressure test loading comply with the following criteria from Subsection NB-3226:

(a) P_m shall not exceed $0.9S_y$ at test temperature. For convenience, the stress intensities developed in the analysis of the Canister due to a normal internal pressure of 15 psig (Tables 3.A.5-4 and 3.A.5-5) are ratioed to demonstrate compliance with this requirement. From Table 3.A.5-4, the maximum primary stress intensity, P_m, is 2.12 ksi. The canister material is ASME SA-240, Type 304 stainless steel, and the test temperature will be less than 200°F for the design basis heat load (Appendix 4.A). Since yield strength decreases with increasing temperature, for purposes of this calculation, the minimum material yield strength at the bounding canister temperature of 200°F is used for the structural critical limit.

$$(P_m)_{test} = \left(27.2/15\right) \times 2.12\,\text{ksi} = 3.84\,\text{ksi}, \text{ which is} < 0.9\,S_y = 0.9 \times 21.4\text{ ksi} = 19.3\text{ ksi}$$

Thus, criterion (a) is met.

(b) For $P_m < 0.67S_y$ (see criterion a), the primary membrane plus bending stress intensity, $P_m + P_b$, shall be $\leq 1.35S_y$. From Table 3.A.5-5, $P_m + P_b = 7.03$ ksi.

$$(P_m + P_b)_{test} = \left(27.2/15\right) \times 7.03\,\text{ksi} = 12.75\,\text{ksi}, \text{ which is} \leq 1.35S_y = 1.35 \times 21.4\text{ ksi} = 28.9\text{ ksi}.$$

Thus, criterion (b) is met.

(c) The external pressure shall not exceed 135% of the value determined by the rules of NB-3133. The exterior of the canister is at atmospheric pressure at the time the pressure test is conducted. Therefore, this criterion is met.

(d) For the 1.25 Design Pressure pneumatic test of NB-6221, the stresses shall be calculated and compared to the limits of criteria (a), (b), and (c). This calculation and the fatigue evaluation of (e) need not be revised unless the actual hydrostatic test pressure exceeds 1.25 Design Pressure by more than 6%.

The test pressure (20.3 psig) slightly exceeds 1.25 × Design Pressure (18.75 psig). However, the stresses used in this evaluation are ratioed to the test pressure. Thus, the stresses at the test pressure are calculated.

(e) Tests, with the exception of the first 10 hydrostatic tests in accordance with NB-6220, shall be considered in the fatigue evaluation of the component.

The Canisters are not reused, and the hydrostatic test will be conducted only once. Thus, the pressure test is not required to be considered in the fatigue analysis.

The Canister hydrostatic pressure tests comply with all NB-3226 criteria. These results bound the performance of a pneumatic pressure test performed in accordance with NB-6220, since the pneumatic pressure test pressure is lower (1.2 × the design pressure or 1.2 × 15 psig = 18 psig).

3.A.5.1.8 Fuel Basket Support Disk Evaluation

The structural evaluation for the PWR support disks for the normal conditions of storage is presented in this section. Note that the Canister may be handled in a vertical or horizontal position. The evaluation is performed for the governing configuration in which the Canister is handled in a vertical position. During normal conditions, the support disk is subjected to its self-weight only (in the Canister axial direction) and is supported by the tie rods/spacers at eight locations for the PWR configuration. To account for the condition when the Canister is handled, a handling load, defined as 10% of the dead load, is considered. Finite element analyses using the ANSYS program are performed for the support disk for the PWR configuration. In addition to the dead load and handling load (10% of dead load), thermal stresses are also considered

based on conservative temperatures that envelop those experienced by the support disk during normal, off-normal (106°F and –40°F ambient temperatures) and transfer conditions. The stress criteria is defined according to ASME Code, Section III, Subsection NG. For the normal condition of storage, the Level A allowable stresses from Subsection NG as shown in the following table are used.

Stress Category	Normal (Level A) Allowable Stresses
P_m	S_m
P_m+P_b	1.5 S_m
P+Q	3.0 S_m

As shown in Figure 3.A.5-3, a finite element model is generated to analyze the PWR fuel basket support disks. The model is constructed using the ANSYS three-dimensional SHELL63 elements and corresponds to a single support disk with a thickness of 1.0 inch. The only loading on the model is the inertial load (1.1g) that includes the dead load and handling load in the out-of-plane direction (Global Z) for normal conditions of storage. The model is constrained in eight locations in the out-of-plane direction to simulate the supports of the tie rods/spacers. Two additional tangential constraints (in the plane of the disk) are considered to eliminate rigid body motion of the model during solution.

Note that a full model is generated because this model is also used for the evaluation of the support disk for the off-normal handling condition in which nonsymmetric loading (side load) is present. In addition, this model is used for the evaluation of a support disk for the 24-inch end drop accident condition of the Vertical Concrete Cask.

The model accommodates thermal expansion effects by using the temperature data from the thermal analysis and the coefficient of thermal expansion. Prior to performing the structural analyses, the temperature distribution in the support disk is determined by executing a steady-state thermal conduction analysis. This is accomplished by converting the SHELL63 structural elements to SHELL57 thermal elements. A maximum temperature of 700°F is applied to the nodes at the center slot of the disk model, and a minimum temperature 400°F is applied to the nodes around the outer circumferential edge of the disk, thus providing a bounding temperature delta of 300°F for the support disk. All other nodal temperatures are then obtained by the steady-state conduction solution. Note that the applied temperatures are conservatively selected to envelope the maximum temperature, as well as the maximum radial temperature gradient (ΔT) of the disk for all normal, off-normal and accident conditions of storage and for transfer

conditions. For normal conditions of storage, stress allowables throughout the basket disk are evaluated on the temperatures calculated from the thermal analysis.

To evaluate the most critical regions of the support disk, a series of cross-sections are considered. The locations of these sections are shown in Figure 3.A.5-4. Table 3.A.5-14 lists the cross-section versus Point 1 and Point 2, which spans the cross section of the ligament on the plane of the support disk.

The stress evaluation results for the support disks for the normal handling condition are presented in Tables 3.A.5-15 and 3.A.5-16. The tables list the 15 highest $P_m + P_b$ and $P + Q$ stress intensities. The Level A allowable stresses from the ASME Code, Section III, Subsection NG, $1.5S_m$ and $3.0S_m$ of the SA240 type 304 stainless steel at the highest nodal temperature at each section, are used for the $P_m + P_b$ and $P + Q$ stresses, respectively. Note that the P_m stresses for the support disk for normal conditions are essentially zero, since there are no loads in the plane of the support disk.

The primary source of the stresses in the disk for the normal condition is the thermal stress. The gradient used in the disk evaluation significantly bounds the thermal gradients in the end weldments since the end weldments are not in the active fuel region, and essentially the entire heat load is rejected in the radial direction of the basket. Therefore, the support disk stresses bound the stresses occurring in the end weldments. This confirms that the basket design is acceptable for the normal condition of storage.

3.A.5.1.9 Canister Closure Weld Evaluation

The minimum closure weld for the Canister is a 0.5-inch groove weld between the closure lid and the canister shell. The evaluation of this weld incorporates a 0.8 stress reduction factor in accordance with NRC Interim Staff Guidance (ISG) No. 15 [44], since the strength of the weld material (E308) is greater than that of the base material (Type 304 stainless steel).

The stresses for the canister closure weld are evaluated using sectional stresses as permitted by Subsection NB of the ASME Code. The location of the section for the canister closure weld evaluation is shown in Figure 3.A.5-2 and corresponds to Section 11 of this figure. The governing P_m, P_m+P_b, and $P+Q$ stress intensities for Section 11, and the associated allowables, are listed in Table 3.A.5-11, Table 3.A.5-12, and Table 3.A.5-13, respectively. The factored allowables, incorporating the 0.8 stress reduction factor, and the resulting controlling Margins of Safety follow.

This evaluation confirms that the canister closure weld is acceptable for normal operation conditions.

Stress Category	Analysis Stress Intensity (ksi)	0.8 × Allowable Stress (ksi)	Margin of Safety
Pm	1.44	16.00	10.11
P_m+P_b	1.93	24.00	11.44
P+Q	1.98	48.00	23.24

Critical Flaw Size for the Canister Closure Weld

The closure weld for the Canister is comprised of multiple weld beads using a compatible weld material for Type 304 stainless steel. An allowable (critical) flaw evaluation has been performed to determine the critical flaw size in the weld region. The result of the flaw evaluation is used to define the minimum weld layer, which defines an upper limit for the nondestructive examination of the weld. Due to the inherent toughness associated with Type 304 stainless steel, a limit load analysis is used in conjunction with a J-integral/tearing modulus approach. The safety factor used in this evaluation is that defined in Section XI of the ASME Code [43].

The stress component used in the evaluation for the critical flaw size is the radial stress component in the weld region of the closure lid. For the normal operation condition, in accordance with ASME Code Section XI, a safety factor of 3 is required. For the purpose of identifying the stress for the flaw evaluation, the weld region corresponding to Section 11 in Figure 3.A.5-2 is considered. The radial stress corresponds to S_X in Tables 3.A.5-1 through 3.A.5-13. The maximum reported radial tensile stress is 0.54 ksi.

To perform the flaw evaluation, a 10 ksi stress is conservatively used, resulting in a significantly larger actual safety factor than the required safety factor of 3. Using a 10 ksi stress as the basis for the evaluation of the structural lid weld, the critical flaw size is 0.44 inch for a flaw that extends 360 degrees around the circumference of the structural lid weld. Stress components for the circumferential (Z) and axial (Y) directions are also reported in Tables 3.A.5-1 through 3.A.5-13, which would be associated with flaws oriented in the radial or horizontal directions, respectively. As shown in Table 3.A.5-13 at Section No. 11 (the closure lid weld), the maximum tensile stress reported for these components (SY and SZ) is 0.99 ksi, which is also enveloped by the value of 10 ksi used in the critical flaw evaluation for stresses in the radial direction.

The 360-degree flaw employed for the circumferential direction is considered to be bounding with respect to any partial flaw in the weld, which could occur in the radial and horizontal directions. Therefore, using a minimum detectable flaw size of 0.375 inch is acceptable, since it is less than the very conservatively determined 0.44-inch critical flaw size.

Figure 3.A.5-1 Canister Finite Element Model for the Storage Evaluation

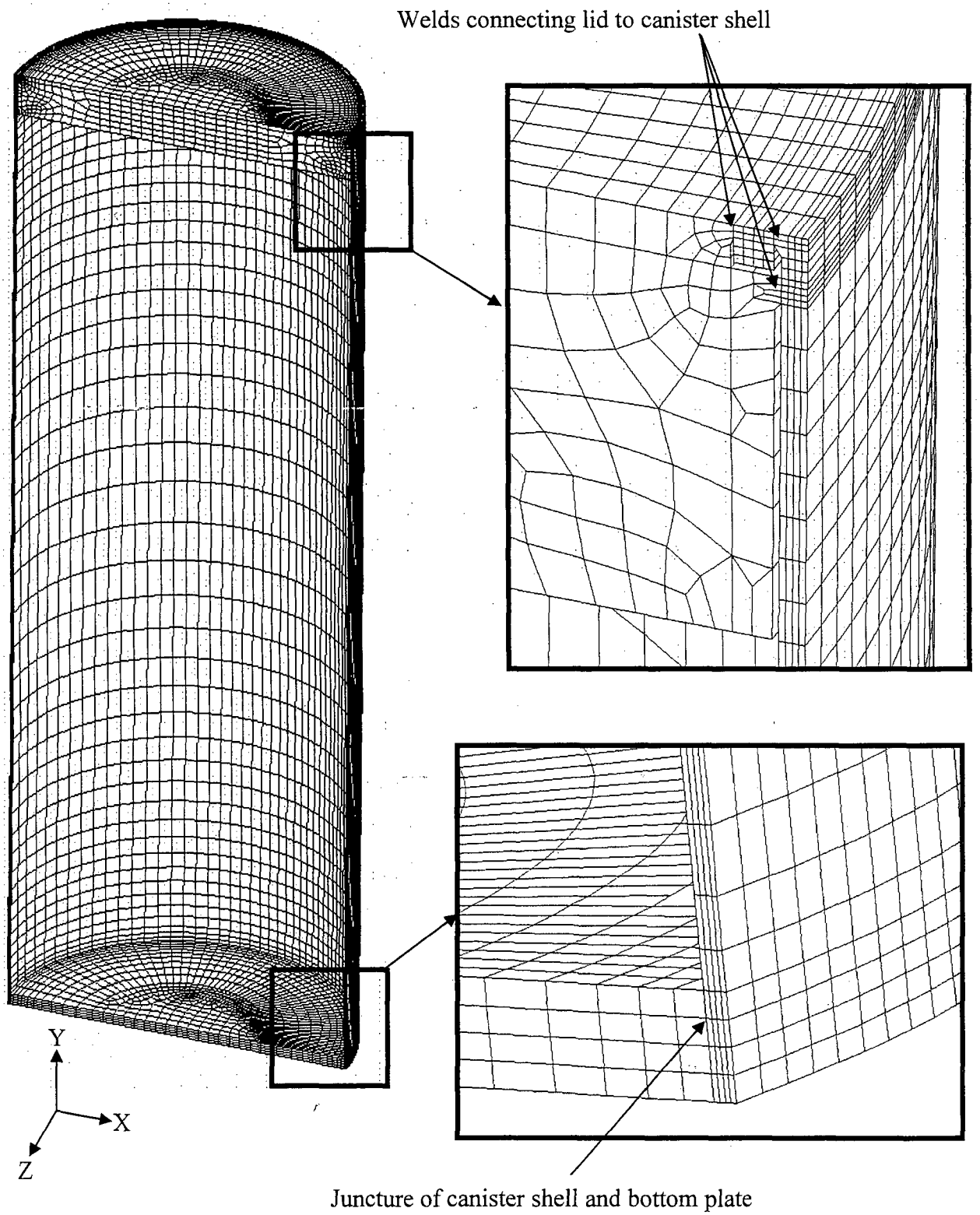

Figure 3.A.5-2 Location of Sections for Linearized Stresses for the Storage Evaluation

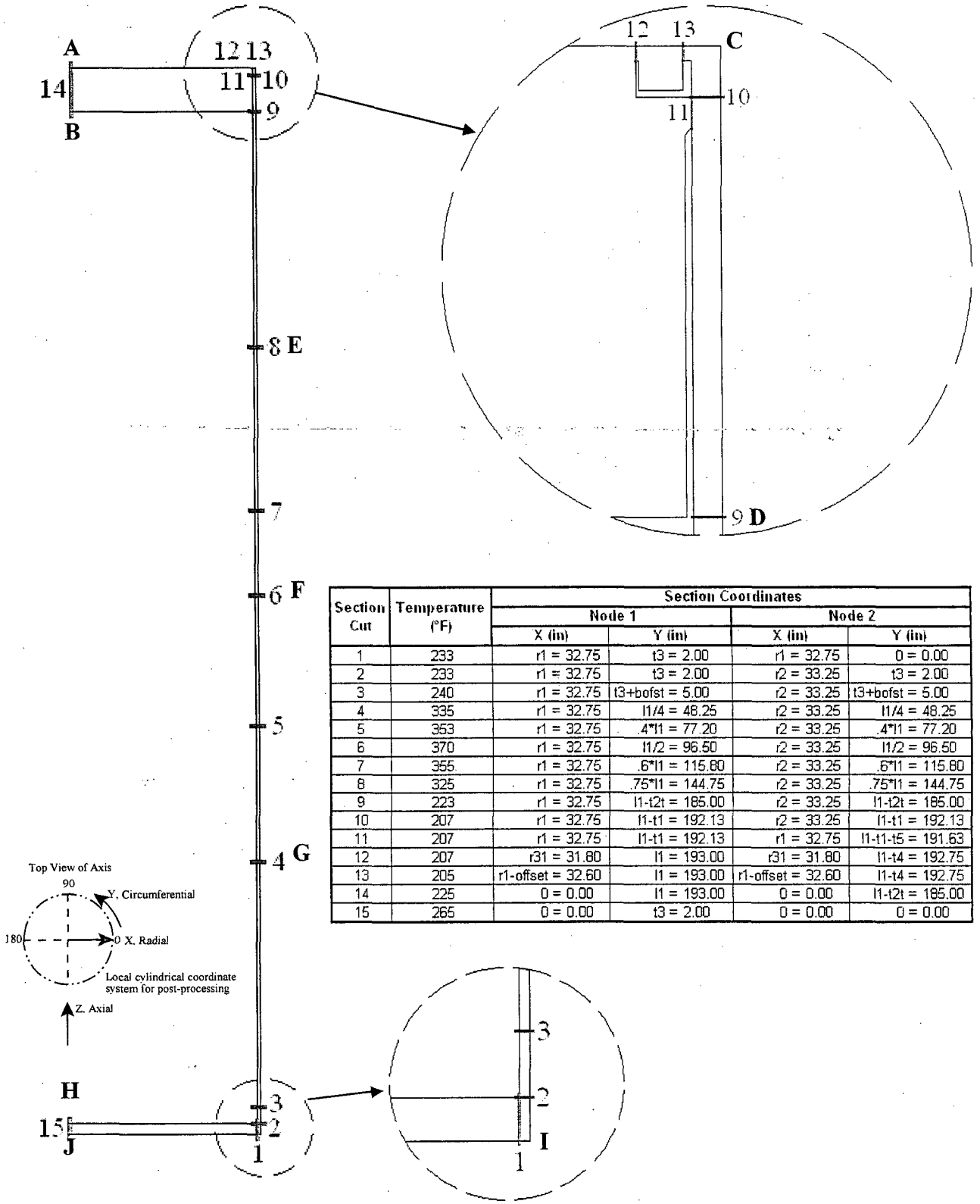

Section Cut	Temperature (°F)	Section Coordinates			
		Node 1		Node 2	
		X (in)	Y (in)	X (in)	Y (in)
1	233	r1 = 32.75	t3 = 2.00	r1 = 32.75	0 = 0.00
2	233	r1 = 32.75	t3 = 2.00	r2 = 33.25	t3 = 2.00
3	240	r1 = 32.75	t3+bofst = 5.00	r2 = 33.25	t3+bofst = 5.00
4	335	r1 = 32.75	l1/4 = 48.25	r2 = 33.25	l1/4 = 48.25
5	353	r1 = 32.75	.4*l1 = 77.20	r2 = 33.25	.4*l1 = 77.20
6	370	r1 = 32.75	l1/2 = 96.50	r2 = 33.25	l1/2 = 96.50
7	355	r1 = 32.75	.6*l1 = 115.80	r2 = 33.25	.6*l1 = 115.80
8	325	r1 = 32.75	.75*l1 = 144.75	r2 = 33.25	.75*l1 = 144.75
9	223	r1 = 32.75	l1-t2t = 185.00	r2 = 33.25	l1-t2t = 185.00
10	207	r1 = 32.75	l1-t1 = 192.13	r2 = 33.25	l1-t1 = 192.13
11	207	r1 = 32.75	l1-t1 = 192.13	r1 = 32.75	l1-t1-t5 = 191.63
12	207	r31 = 31.80	l1 = 193.00	r31 = 31.80	l1-t4 = 192.75
13	205	r1-offset = 32.60	l1 = 193.00	r1-offset = 32.60	l1-t4 = 192.75
14	225	0 = 0.00	l1 = 193.00	0 = 0.00	l1-t2t = 185.00
15	265	0 = 0.00	t3 = 2.00	0 = 0.00	0 = 0.00

Figure 3.A.5-3 Basket Support Disk Finite Element Model

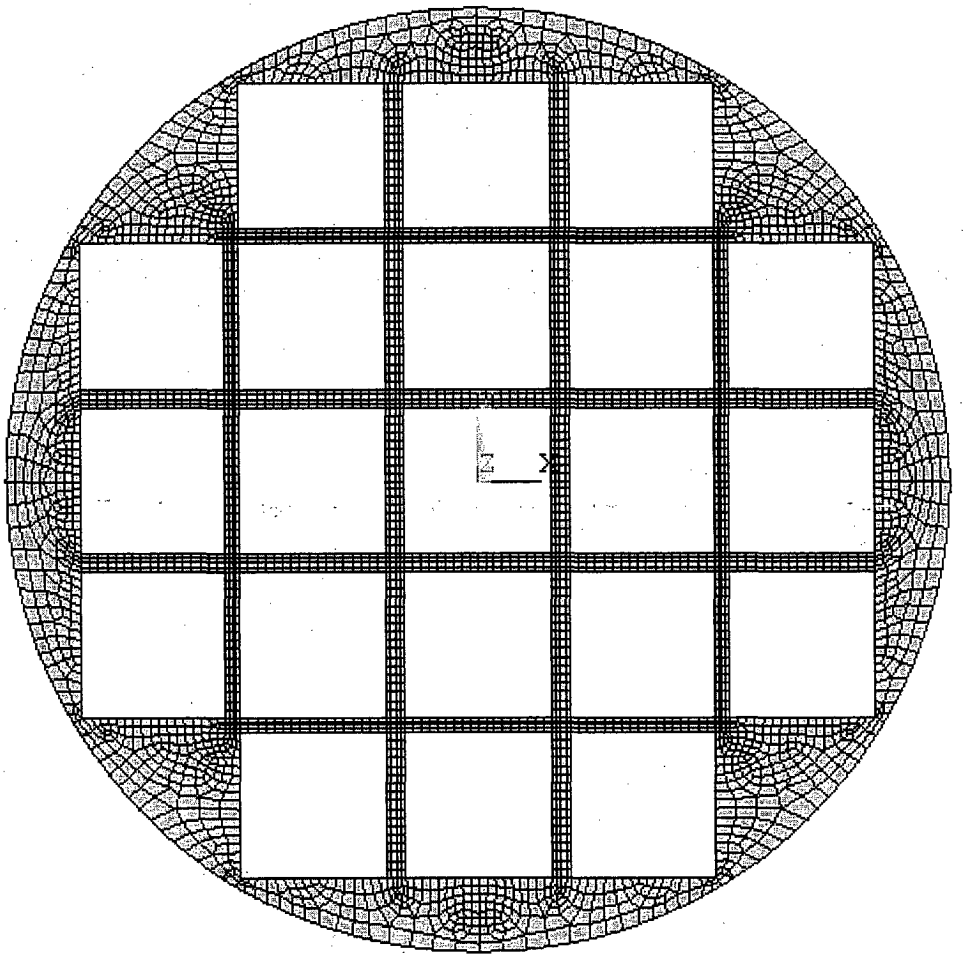

Figure 3.A.5-4 Basket Support Disk Sections for Stress Evaluations

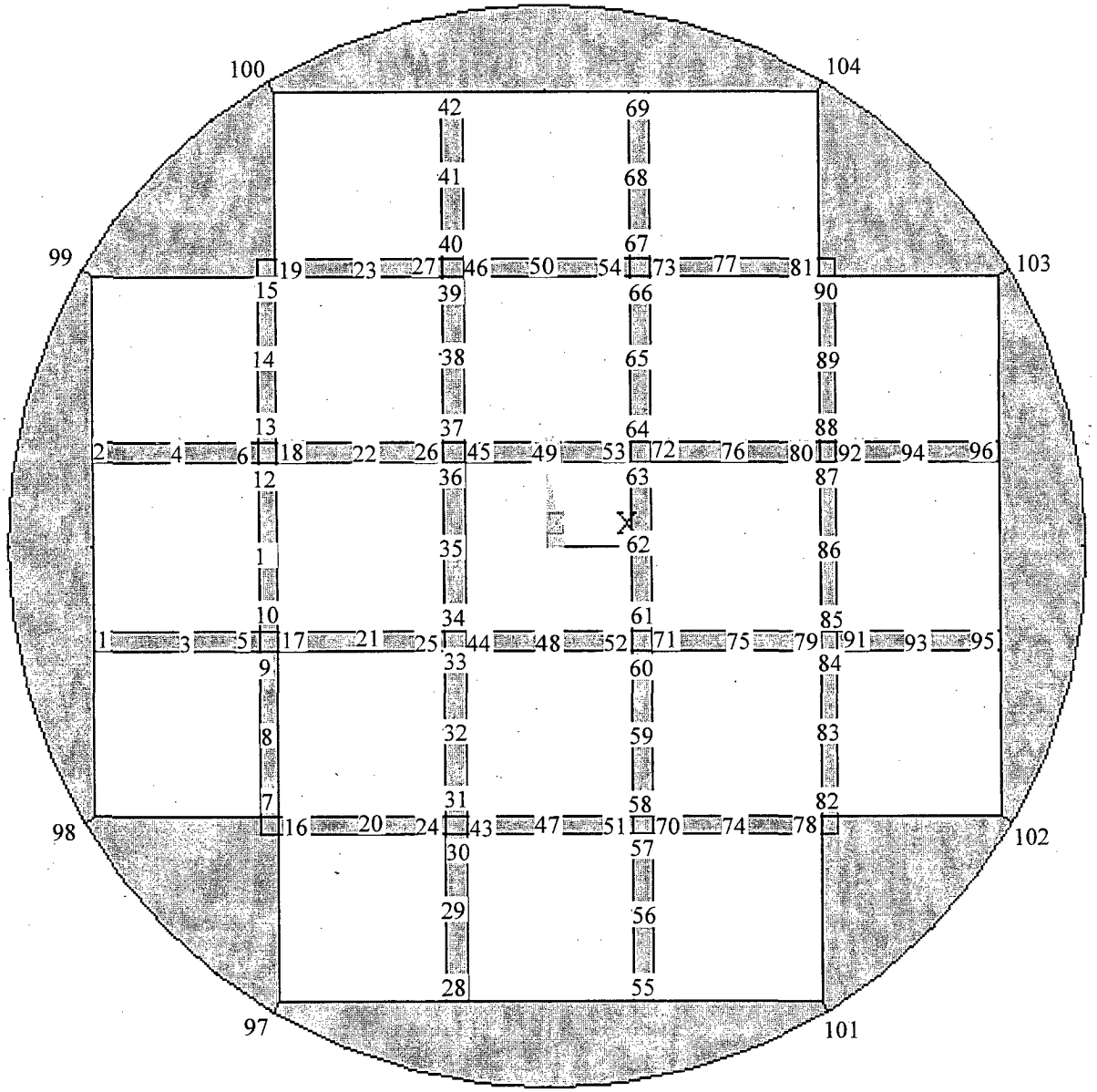

Table 3.A.5-1 Canister Secondary (Thermal) Stresses (ksi)

Section[1]	Component Stresses (ksi)						S_{int}
	S_x	S_y	S_z	S_{xy}	S_{yz}	S_{xz}	
1	-0.03	1.76	-0.05	0.09	0.00	-0.02	1.82
2	0.03	0.91	-0.66	0.04	0.00	-0.08	1.58
3	0.00	-0.14	-0.81	-0.01	0.00	0.01	0.82
4	-0.04	-0.18	0.44	0.00	0.00	0.00	0.61
5	0.03	0.06	-0.13	0.00	0.00	0.00	0.19
6	-0.08	-0.30	0.63	0.00	0.00	0.00	0.93
7	0.04	-0.10	-0.37	0.00	0.01	0.00	0.42
8	-0.24	-3.11	-3.78	0.12	0.00	0.00	3.55
9	0.00	-0.13	-0.31	0.00	0.00	-0.01	0.31
10	0.02	0.73	-0.66	-0.01	0.00	0.06	1.40
11	-0.37	0.80	0.22	-0.01	0.00	0.13	1.20
12	-0.36	0.81	0.00	-0.01	0.00	0.00	1.17
13	-0.29	1.06	-0.05	-0.01	0.00	0.04	1.35
14	-1.47	-1.56	0.08	0.01	0.02	0.00	1.64
15	-3.47	-3.38	0.25	0.02	-0.01	0.01	3.72

[1] See Figure 3.A.5.1-2 for definition of locations of stress sections and the components shown are in the cylindrical coordinate system.

Table 3.A.5-2 Canister Deadweight Primary Membrane (P_m) Stresses (ksi), $P_{internal}$ = 0 psig

Section[1]	Component Stresses (ksi)						S_{int}
	S_x	S_y	S_z	S_{xy}	S_{yz}	S_{xz}	
1	0.00	-0.01	-0.07	0.00	0.00	-0.01	0.07
2	0.01	-0.02	-0.12	0.00	0.00	0.00	0.13
3	0.00	-0.01	-0.13	0.00	0.00	0.00	0.13
4	0.00	0.00	-0.12	0.00	0.00	0.00	0.12
5	0.00	0.00	-0.11	0.00	0.00	0.00	0.11
6	0.00	0.00	-0.10	0.00	0.00	0.00	0.10
7	0.00	0.00	-0.10	0.00	0.00	0.00	0.10
8	0.00	0.00	-0.09	0.00	0.00	0.00	0.09
9	0.00	0.00	-0.08	0.00	0.00	0.00	0.08
10	0.01	-0.02	-0.02	0.00	0.00	0.02	0.04
11	0.00	0.00	0.04	0.00	0.00	0.03	0.07
12	-0.03	-0.03	0.01	0.00	0.00	0.00	0.04
13	-0.02	-0.03	-0.02	0.00	0.00	0.01	0.02
14	0.00	0.00	0.00	0.00	0.00	0.00	0.00
15	0.00	0.00	-0.02	0.00	0.00	0.00	0.02

[1] See Figure 3.A.5.1-2 for definition of locations of stress sections and the components shown are in the cylindrical coordinate system.

Table 3.A.5-3 Canister Deadweight Primary Membrane plus Bending ($P_m + P_b$) Stresses (ksi), $P_{internal} = 0$ psig

Section[1]	Component Stresses (ksi)						S_{int}
	S_x	S_y	S_z	S_{xy}	S_{yz}	S_{xz}	
1	0.01	-0.01	-0.07	0.00	0.00	-0.01	0.08
2	0.00	-0.04	-0.15	0.00	0.00	0.00	0.15
3	0.00	-0.01	-0.14	0.00	0.00	0.00	0.14
4	0.00	0.00	-0.12	0.00	0.00	0.00	0.12
5	0.00	0.00	-0.11	0.00	0.00	0.00	0.11
6	0.00	0.00	-0.10	0.00	0.00	0.00	0.10
7	0.00	0.00	-0.10	0.00	0.00	0.00	0.10
8	0.00	0.00	-0.09	0.00	0.00	0.00	0.09
9	0.00	0.00	-0.08	0.00	0.00	0.00	0.08
10	0.00	-0.05	-0.10	0.00	0.00	0.00	0.10
11	0.02	0.00	0.03	0.00	0.00	0.04	0.09
12	-0.07	-0.04	0.01	0.00	0.00	0.00	0.07
13	0.03	-0.02	-0.01	0.00	0.00	0.00	0.05
14	0.05	0.05	0.00	0.00	0.00	0.00	0.05
15	0.00	0.00	-0.02	0.00	0.00	0.00	0.02

[1] See Figure 3.A.5.1-2 for definition of locations of stress sections and the components shown are in the cylindrical coordinate system.

Table 3.A.5-4 Canister Normal Internal Pressure Primary Membrane (P_m) Stresses (ksi)

Section[1]	Component Stresses (ksi)						S_{int}
	S_x	S_y	S_z	S_{xy}	S_{yz}	S_{xz}	
1	-0.02	0.37	1.01	0.00	0.00	-0.07	1.03
2	0.89	-1.18	-0.34	-0.09	0.01	-0.23	2.12
3	0.01	-1.39	0.49	0.02	0.00	0.14	1.92
4	-0.01	0.98	0.49	0.05	0.00	0.00	0.99
5	-0.01	0.98	0.49	0.05	0.00	0.00	0.99
6	-0.01	0.98	0.49	-0.01	0.00	0.00	0.99
7	-0.01	0.98	0.49	-0.01	0.00	0.00	0.99
8	-0.01	0.98	0.49	0.05	0.00	0.00	0.99
9	-0.01	0.94	0.49	0.05	0.00	0.00	0.95
10	-0.15	0.08	0.05	0.01	0.00	-0.02	0.23
11	0.01	0.14	0.10	0.00	0.00	-0.18	0.37
12	0.10	0.16	-0.06	0.00	0.00	-0.01	0.22
13	0.02	0.17	0.08	0.01	0.00	-0.02	0.16
14	-0.01	-0.01	-0.01	0.00	0.00	0.00	0.00
15	0.10	0.10	-0.01	0.00	0.00	0.00	0.10

[1] See Figure 3.A.5.1-2 for definition of locations of stress sections and the components shown are in the cylindrical coordinate system.

Table 3.A.5-5 Canister Normal Internal Pressure Primary Membrane plus Bending ($P_m + P_b$) Stresses (ksi)

Section[1]	Component Stresses (ksi)						S_{int}
	S_x	S_y	S_z	S_{xy}	S_{yz}	S_{xz}	
1	0.39	-0.31	3.11	-0.03	0.00	0.13	3.43
2	0.38	-3.25	-6.55	0.04	-0.01	-0.59	7.03
3	0.13	-0.97	1.79	0.01	0.00	0.17	2.77
4	-0.01	0.99	0.49	-0.01	0.00	0.00	1.00
5	-0.01	0.99	0.49	-0.01	0.00	0.00	1.00
6	-0.01	0.99	0.49	-0.01	0.00	0.00	1.00
7	-0.01	0.99	0.49	-0.01	0.00	0.00	1.00
8	-0.01	0.99	0.49	0.05	0.00	0.00	1.00
9	0.00	1.01	0.72	0.05	0.00	0.00	1.01
10	-0.29	0.01	-0.04	0.00	0.00	-0.06	0.32
11	0.17	0.26	0.36	0.01	0.01	-0.30	0.62
12	0.28	0.23	-0.04	0.00	0.00	0.00	0.32
13	-0.21	0.10	0.05	0.01	0.00	-0.01	0.30
14	0.32	0.32	0.00	0.00	0.00	0.00	0.32
15	4.17	4.18	0.00	0.00	0.00	0.00	4.18

[1] See Figure 3.A.5.1-2 for definition of locations of stress sections and the components shown are in the cylindrical coordinate system.

Table 3.A.5-6 Canister Normal Handling with No Internal Pressure Primary Membrane (P_m) Stresses (ksi)

Section[1]	Component Stresses (ksi)						S_{int}
	S_x	S_y	S_z	S_{xy}	S_{yz}	S_{xz}	
1	-0.03	0.52	1.43	-0.01	0.00	-0.08	1.47
2	1.23	-1.98	-0.41	0.03	0.00	-0.35	3.29
3	0.02	-3.09	0.75	0.04	0.00	0.20	3.89
4	0.00	0.00	0.77	0.00	0.00	0.00	0.77
5	0.00	0.00	0.79	0.00	0.00	0.00	0.80
6	0.00	0.00	0.82	0.00	0.00	0.00	0.83
7	0.00	0.00	0.85	0.00	0.00	0.00	0.85
8	0.00	0.00	0.91	0.00	0.00	0.00	0.92
9	0.00	-0.06	1.10	0.00	0.00	-0.01	1.16
10	-0.23	0.40	0.23	-0.01	0.00	-0.23	0.73
11	-0.04	0.17	-0.56	0.00	-0.01	-0.51	1.14
12	0.49	0.66	-0.15	-0.01	0.00	-0.03	0.82
13	0.25	0.69	0.26	-0.01	0.00	-0.09	0.52
14	0.00	0.00	0.00	0.00	0.00	0.00	0.00
15	0.12	0.12	-0.01	0.00	0.00	0.00	0.13

[1] See Figure 3.A.5.1-2 for definition of locations of stress sections and the components shown are in the cylindrical coordinate system.

Table 3.A.5-7 Canister Normal Handling with No Internal Pressure Primary Membrane plus Bending ($P_m + P_b$) Stresses (ksi)

Section[1]	Component Stresses (ksi)						S_{int}
	S_x	S_y	S_z	S_{xy}	S_{yz}	S_{xz}	
1	0.51	-0.77	4.41	0.01	0.00	0.18	5.19
2	0.53	-4.89	-9.18	0.06	-0.01	-0.85	9.86
3	0.19	-2.33	3.13	0.03	0.00	0.24	5.48
4	0.00	-0.07	0.75	0.00	0.00	0.00	0.82
5	0.00	-0.10	0.76	0.00	0.00	0.00	0.86
6	0.00	-0.12	0.78	0.00	0.00	0.00	0.91
7	0.00	-0.14	0.80	0.00	0.00	0.00	0.94
8	0.00	-0.14	0.86	0.00	0.00	0.00	1.00
9	0.00	-0.06	1.16	0.00	0.00	-0.01	1.23
10	-0.04	0.82	1.42	-0.01	0.00	-0.06	1.47
11	-0.27	0.09	-0.40	0.00	-0.01	-0.67	1.34
12	1.02	0.87	-0.10	0.00	0.00	0.00	1.12
13	-0.49	0.46	0.18	-0.01	0.00	-0.05	0.96
14	-0.30	-0.30	0.00	-0.01	0.00	0.00	0.31
15	6.56	6.57	-0.01	0.00	0.00	0.00	6.58

[1] See Figure 3.A.5.1-2 for definition of locations of stress sections and the components shown are in the cylindrical coordinate system.

Table 3.A.5-8 Summary of Canister Normal Handling plus Normal Internal Pressure Primary Membrane (P_m) Stresses (ksi)

Section[1]	Component Stresses (ksi)						S_{int}	S_{allow}	MS
	S_x	S_y	S_z	S_{xy}	S_{yz}	S_{xz}			
1	-0.05	0.89	2.44	-0.01	0.00	-0.15	2.50	20.00	6.99
2	2.13	-3.16	-0.75	0.06	-0.01	-0.58	5.41	20.00	2.70
3	0.02	-4.48	1.25	0.05	0.00	0.34	5.82	20.00	2.44
4	-0.01	0.98	1.26	-0.01	0.00	0.00	1.27	19.54	14.41
5	-0.01	0.98	1.28	-0.01	0.00	0.00	1.29	19.31	13.98
6	-0.01	0.98	1.31	-0.01	0.00	0.00	1.32	19.09	13.48
7	-0.01	0.98	1.34	-0.01	0.00	0.00	1.34	19.39	13.44
8	-0.01	0.98	1.40	0.00	0.00	0.00	1.41	19.68	12.98
9	-0.01	0.88	1.58	-0.01	0.00	0.00	1.59	20.00	11.57
10	-0.38	0.49	0.28	-0.01	0.00	-0.25	0.95	20.00	20.02
11	-0.03	0.31	-0.46	-0.01	-0.01	-0.69	1.44	16.00[2]	10.11
12	0.60	0.82	-0.21	-0.01	0.00	-0.04	1.04	20.00	18.26
13	0.27	0.86	0.34	-0.01	0.00	-0.11	0.68	20.00	28.55
14	-0.01	-0.01	-0.01	0.00	0.00	0.00	0.00	20.00	+LARGE
15	0.22	0.22	-0.02	0.00	0.00	0.00	0.23	20.00	84.41

[1] See Figure 3.A.5.1-2 for definition of locations of stress sections and the components shown are in the cylindrical coordinate system.

[2] Allowable stress includes reduction factor for closure lid weld, 0.8 × allowable stress.

Table 3.A.5-9 Summary of Canister Normal Handling, plus Normal Pressure Primary Membrane plus Bending ($P_m + P_b$) Stresses (ksi)

Section[1]	Component Stresses (ksi)						S_{int}	S_{allow}	MS
	S_x	S_y	S_z	S_{xy}	S_{yz}	S_{xz}			
1	0.90	-1.08	7.52	0.02	0.00	0.31	8.62	30.00	2.48
2	0.91	-8.13	-15.72	0.10	-0.02	-1.44	16.88	30.00	0.78
3	0.31	-3.30	4.92	0.04	0.00	0.40	8.25	30.00	2.63
4	-0.01	1.05	1.27	0.05	0.00	0.00	1.28	29.32	21.85
5	0.00	1.07	1.31	-0.01	0.00	0.00	1.31	28.97	21.06
6	0.00	1.09	1.35	-0.01	0.00	0.00	1.35	28.63	20.18
7	0.00	1.10	1.38	-0.01	0.00	0.00	1.38	29.08	20.05
8	0.00	1.11	1.45	-0.01	0.00	0.00	1.45	29.51	19.35
9	0.00	0.95	1.75	-0.01	-0.01	0.00	1.76	30.00	16.08
10	-0.05	0.97	1.56	-0.01	0.00	-0.03	1.61	30.00	17.59
11	-0.10	0.35	-0.04	-0.01	-0.01	-0.96	1.93	24.00[2]	11.44
12	1.30	1.10	-0.14	0.00	0.00	0.00	1.45	30.00	19.75
13	-0.70	0.56	0.22	-0.01	0.00	-0.06	1.26	30.00	22.72
14	-0.63	-0.63	-0.02	-0.01	0.00	0.00	0.63	30.00	46.75
15	10.72	10.75	-0.01	0.00	0.00	0.00	10.76	30.00	1.79

[1] See Figure 3.A.5.1-2 for definition of locations of stress sections and the components shown are in the cylindrical coordinate system.

[2] Allowable stress includes reduction factor for closure lid weld, 0.8 × allowable stress.

Table 3.A.5-10 Summary of Canister Deadweight plus Normal Pressure, Primary Membrane (P_m) Stresses (ksi)

Section[1]	Component Stresses (ksi)						S_{int}	S_{allow}	MS
	S_x	S_y	S_z	S_{xy}	S_{yz}	S_{xz}			
1	0.00	0.10	0.24	0.00	0.00	0.02	0.24	20.00	82.27
2	0.11	0.12	0.21	0.00	0.00	0.00	0.11	20.00	185.47
3	0.00	0.54	0.36	0.03	0.00	0.02	0.55	20.00	35.25
4	-0.01	0.98	0.37	0.05	0.00	0.00	0.99	19.54	18.75
5	-0.01	0.98	0.38	0.05	0.00	0.00	0.99	19.31	18.51
6	-0.01	0.98	0.38	-0.01	0.00	0.00	0.99	19.09	18.29
7	-0.01	0.98	0.39	-0.01	0.00	0.00	0.99	19.39	18.59
8	-0.01	0.98	0.40	0.05	0.00	0.00	0.99	19.68	18.87
9	-0.01	0.94	0.41	0.05	0.00	0.00	0.95	20.00	19.99
10	-0.14	0.06	0.04	0.00	0.00	0.00	0.20	20.00	99.01
11	0.01	0.14	0.14	0.00	0.00	-0.15	0.32	16.00[2]	49.00
12	0.07	0.13	-0.05	0.00	0.00	-0.01	0.18	20.00	111.32
13	0.00	0.14	0.06	0.01	0.00	-0.02	0.14	20.00	141.14
14	-0.01	-0.01	-0.01	0.00	0.00	0.00	0.00	20.00	+LARGE
15	0.02	0.02	-0.04	0.00	0.00	0.00	0.05	20.00	374.20

[1] See Figure 3.A.5.1-2 for definition of locations of stress sections and the components shown are in the cylindrical coordinate system.

[2] Allowable stress includes reduction factor for closure lid weld, 0.8 × allowable stress.

Table 3.A.5-11 Summary of Canister Deadweight plus Normal Pressure, Primary Membrane plus Bending ($P_m + P_b$) Stresses (ksi)

Section[1]	Component Stresses (ksi)						S_{int}	S_{allow}	MS
	S_x	S_y	S_z	S_{xy}	S_{yz}	S_{xz}			
1	0.03	0.19	0.53	0.00	0.00	0.07	0.52	30.00	57.12
2	0.16	0.35	0.92	0.01	0.00	0.06	0.77	30.00	37.82
3	-0.02	0.57	0.49	0.03	0.00	0.01	0.60	30.00	49.17
4	-0.01	0.99	0.37	-0.01	0.00	0.00	1.00	29.32	28.20
5	-0.01	0.99	0.38	-0.01	0.00	0.00	1.00	28.97	27.84
6	-0.01	0.99	0.39	-0.01	0.00	0.00	1.00	28.63	27.53
7	-0.01	0.99	0.39	-0.01	0.00	0.00	1.00	29.08	27.96
8	-0.01	0.99	0.40	0.05	0.00	0.00	1.00	29.51	28.39
9	0.00	1.01	0.65	0.05	0.00	0.00	1.01	30.00	28.56
10	-0.27	0.02	0.03	0.00	0.00	-0.04	0.30	30.00	97.59
11	0.19	0.26	0.38	0.00	0.01	-0.25	0.55	24.00[2]	42.64
12	0.22	0.18	-0.03	0.00	0.00	0.00	0.25	30.00	120.46
13	-0.17	0.08	0.04	0.01	0.00	-0.01	0.26	30.00	116.37
14	0.27	0.27	0.00	0.00	0.00	0.00	0.27	30.00	109.89
15	0.02	0.02	-0.04	0.00	0.00	0.00	0.05	30.00	560.32

[1] See Figure 3.A.5.1-2 for definition of locations of stress sections and the components shown are in the cylindrical coordinate system.

[2] Allowable stress includes reduction factor for closure lid weld, 0.8 × allowable stress.

Table 3.A.5-12 Summary of Maximum Canister Normal Pressure, plus Deadweight, plus Secondary (P + Q) Stresses (ksi)

Section[1]	Component Stresses (ksi)						S_{int}	S_{allow}	MS
	S_x	S_y	S_z	S_{xy}	S_{yz}	S_{xz}			
1	-0.01	1.79	-0.06	0.09	0.00	-0.01	1.86	60.00	31.23
2	0.09	0.76	-1.26	0.03	0.01	-0.15	2.04	60.00	28.43
3	0.01	0.86	1.11	0.00	-0.01	0.04	1.10	60.00	53.68
4	-0.04	0.84	0.79	0.00	0.02	0.00	0.89	58.63	65.23
5	-0.03	1.04	0.45	0.00	0.02	0.00	1.08	57.93	52.83
6	-0.08	0.69	1.03	0.00	0.00	0.00	1.11	57.27	50.61
7	-0.06	0.99	0.63	0.00	0.00	0.00	1.04	58.17	54.73
8	-0.25	-2.12	-3.39	0.10	0.00	0.00	3.14	59.02	17.77
9	0.00	0.90	0.50	0.00	-0.04	0.00	0.91	60.00	65.23
10	0.02	0.84	-0.60	-0.01	0.00	0.10	1.46	60.00	40.01
11	-0.54	0.81	0.11	-0.02	0.00	0.09	1.36	48.00[2]	34.29
12	-0.23	0.95	-0.04	-0.01	0.00	-0.02	1.18	60.00	49.90
13	-0.30	1.17	0.03	0.07	0.00	0.00	1.48	60.00	39.59
14	-1.76	-1.84	0.06	0.01	0.01	0.00	1.91	60.00	30.49
15	-4.34	-4.28	0.31	0.01	-0.04	0.01	4.65	60.00	11.90

1 See Figure 3.A.5.1-2 for definition of locations of stress sections and the components shown are in the cylindrical coordinate system.

2 Allowable stress includes reduction factor for closure lid weld, 0.8 × allowable stress.

Table 3.A.5-13 Summary of Maximum Canister Normal Handling, plus Normal Pressure, plus Secondary (P + Q) Stresses (ksi)

Section[1]	Component Stresses (ksi)						S_{int}	S_{allow}	MS
	S_x	S_y	S_z	S_{xy}	S_{yz}	S_{xz}			
1	0.86	0.12	7.75	0.00	0.00	0.30	7.64	60.00	6.85
2	0.93	-7.24	-16.38	0.09	-0.02	-1.52	17.58	60.00	2.41
3	0.31	-2.94	5.72	0.04	0.01	0.42	8.69	60.00	5.90
4	-0.04	0.76	1.68	0.00	0.01	0.00	1.72	58.63	33.14
5	-0.03	1.10	1.34	0.00	-0.01	0.00	1.37	57.93	41.13
6	-0.09	0.83	1.90	0.00	-0.01	0.00	1.99	57.27	27.85
7	-0.06	1.08	1.49	0.00	-0.02	0.00	1.55	58.17	36.51
8	-0.25	-2.26	-2.44	0.10	0.00	0.00	2.19	59.02	25.97
9	0.00	0.83	1.68	0.00	-0.02	-0.01	1.68	60.00	34.63
10	-0.89	0.84	-0.75	0.00	0.00	-0.41	2.08	60.00	27.91
11	-0.24	0.99	-0.82	0.00	0.00	-0.36	1.98	48.00[2]	23.24
12	0.95	1.91	-0.14	-0.02	0.01	0.00	2.06	60.00	28.15
13	-0.76	1.71	0.19	-0.03	0.00	-0.04	2.47	60.00	23.26
14	-2.10	-2.19	0.07	0.00	0.01	0.00	2.25	60.00	25.63
15	-13.56	-13.56	-0.06	0.03	0.03	0.00	13.53	60.00	3.43

1 See Figure 3.A.5.1-2 for definition of locations of stress sections and the components shown are in the cylindrical coordinate system.

2 Allowable stress includes reduction factor for closure lid weld, 0.8 × allowable stress.

Table 3.A.5-14 Listing of Sections for Stress Evaluation of Support Disk

Section Number[1]	Point 1	Point 2	Point 1		Point 2	
			X	Y	X	Y
1	3786	3803	-27.425	-6.285	-27.425	-5.035
2	1325	1308	-27.425	5.035	-27.425	6.285
3	4044	4029	-22.094	-6.285	-22.094	-5.035
4	1551	1566	-22.094	5.035	-22.094	6.285
5	3748	3744	-17.355	-6.285	-17.355	-5.035
6	1266	1270	-17.355	5.035	-17.355	6.285
7	4102	4101	-17.355	-16.355	-16.355	-16.355
8	4489	4474	-17.355	-11.616	-16.355	-11.616
9	3748	3752	-17.355	-6.285	-16.355	-6.285
10	3744	3743	-17.355	-5.035	-16.355	-5.035
11	1907	1898	-17.355	0.000	-16.355	0.000
12	1266	1265	-17.355	5.035	-16.355	5.035
13	1270	1274	-17.355	6.285	-16.355	6.285
14	2011	1996	-17.355	11.616	-16.355	11.616
15	1624	1623	-17.355	16.355	-16.355	16.355
16	4110	4101	-16.355	-17.355	-16.355	-16.355
17	3752	3743	-16.355	-6.285	-16.355	-5.035
18	1265	1274	-16.355	5.035	-16.355	6.285
19	1623	1632	-16.355	16.355	-16.355	17.355
20	4554	4569	-11.616	-17.355	-11.616	-16.355
21	4195	4178	-11.616	-6.285	-11.616	-5.035
22	1700	1717	-11.616	5.035	-11.616	6.285
23	2091	2076	-11.616	16.355	-11.616	17.355
24	3916	3912	-6.285	-17.355	-6.285	-16.355
25	3533	3529	-6.285	-6.285	-6.285	-5.035
26	1241	1245	-6.285	5.035	-6.285	6.285
27	1434	1438	-6.285	16.355	-6.285	17.355
28	3936	3953	-6.285	-27.425	-5.035	-27.425
29	3945	3964	-6.285	-22.094	-5.035	-22.094
30	3916	3920	-6.285	-17.355	-5.035	-17.355
31	3912	3911	-6.285	-16.355	-5.035	-16.355
32	4274	4259	-6.285	-11.616	-5.035	-11.616
33	3533	3537	-6.285	-6.285	-5.035	-6.285

[1] Section locations are shown in Figure 3.A.5-4.

Table 3.A.5-14 Listing of Sections for Stress Evaluation of Support Disk (continued)

Section Number[1]	Point 1	Point 2	Point 1		Point 2	
			X	Y	X	Y
34	3529	3528	-6.285	-5.035	-5.035	-5.035
35	1657	1648	-6.285	0.000	-5.035	0.000
36	1241	1240	-6.285	5.035	-5.035	5.035
37	1245	1249	-6.285	6.285	-5.035	6.285
38	1796	1781	-6.285	11.616	-5.035	11.616
39	1434	1433	-6.285	16.355	-5.035	16.355
40	1438	1442	-6.285	17.355	-5.035	17.355
41	1467	1486	-6.285	22.094	-5.035	22.094
42	1458	1475	-6.285	27.425	-5.035	27.425
43	3920	3911	-5.035	-17.355	-5.035	-16.355
44	3537	3528	-5.035	-6.285	-5.035	-5.035
45	1240	1249	-5.035	5.035	-5.035	6.285
46	1433	1442	-5.035	16.355	-5.035	17.355
47	3182	3191	0.000	-17.355	0.000	-16.355
48	3092	3101	0.000	-6.285	0.000	-5.035
49	623	614	0.000	5.035	0.000	6.285
50	713	704	0.000	16.355	0.000	17.355
51	2681	2672	5.035	-17.355	5.035	-16.355
52	2488	2479	5.035	-6.285	5.035	-5.035
53	1	10	5.035	5.035	5.035	6.285
54	194	203	5.035	16.355	5.035	17.355
55	2714	2697	5.035	-27.425	6.285	-27.425
56	2725	2706	5.035	-22.094	6.285	-22.094
57	2681	2677	5.035	-17.355	6.285	-17.355
58	2672	2673	5.035	-16.355	6.285	-16.355
59	3020	3035	5.035	-11.616	6.285	-11.616
60	2488	2484	5.035	-6.285	6.285	-6.285
61	2479	2480	5.035	-5.035	6.285	-5.035
62	409	418	5.035	0.000	6.285	0.000
63	1	2	5.035	5.035	6.285	5.035
64	10	6	5.035	6.285	6.285	6.285
65	542	557	5.035	11.616	6.285	11.616
66	194	195	5.035	16.355	6.285	16.355

[1] Section locations are shown in Figure 3.A.5-4.

Table 3.A.5-14 Listing of Sections for Stress Evaluation of Support Disk (continued)

Section Number[1]	Point 1	Point 2	Point 1		Point 2	
			X	Y	X	Y
67	203	199	5.035	17.355	6.285	17.355
68	247	228	5.035	22.094	6.285	22.094
69	236	219	5.035	27.425	6.285	27.425
70	2677	2673	6.285	-17.355	6.285	-16.355
71	2484	2480	6.285	-6.285	6.285	-5.035
72	2	6	6.285	5.035	6.285	6.285
73	195	199	6.285	16.355	6.285	17.355
74	3315	3330	11.616	-17.355	11.616	-16.355
75	2956	2939	11.616	-6.285	11.616	-5.035
76	461	478	11.616	5.035	11.616	6.285
77	852	837	11.616	16.355	11.616	17.355
78	2871	2862	16.355	-17.355	16.355	-16.355
79	2513	2504	16.355	-6.285	16.355	-5.035
80	26	35	16.355	5.035	16.355	6.285
81	384	393	16.355	16.355	16.355	17.355
82	2862	2863	16.355	-16.355	17.355	-16.355
83	3235	3250	16.355	-11.616	17.355	-11.616
84	2513	2509	16.355	-6.285	17.355	-6.285
85	2504	2505	16.355	-5.035	17.355	-5.035
86	659	668	16.355	0.000	17.355	0.000
87	26	27	16.355	5.035	17.355	5.035
88	35	31	16.355	6.285	17.355	6.285
89	757	772	16.355	11.616	17.355	11.616
90	384	385	16.355	16.355	17.355	16.355
91	2509	2505	17.355	-6.285	17.355	-5.035
92	27	31	17.355	5.035	17.355	6.285
93	2805	2790	22.094	-6.285	22.094	-5.035
94	312	327	22.094	5.035	22.094	6.285
95	2547	2564	27.425	-6.285	27.425	-5.035
96	86	69	27.425	5.035	27.425	6.285
97	4627	4659	-16.710	-28.021	-16.355	-27.425

[1] Section locations are shown in Figure 3.A.5-4.

Table 3.A.5-14 Listing of Sections for Stress Evaluation of Support Disk (Continued)

Section Number[1]	Point 1	Point 2	Point 1		Point 2	
			X	Y	X	Y
98	3769	3784	-28.021	-16.710	-27.425	-16.355
99	1291	1306	-28.021	16.710	-27.425	16.355
100	2149	2181	-16.710	28.021	-16.355	27.425
101	3388	3420	16.710	-28.021	16.355	-27.425
102	2530	2545	28.021	-16.710	27.425	-16.355
103	52	67	28.021	16.710	27.425	16.355
104	910	942	16.710	28.021	16.355	27.425

[1] Section locations are shown in Figure 3.A.5-4

Table 3.A.5-15 $P_m + P_b$ Stresses for Support Disk, Normal Handling (ksi)

Number	Section Location	Sx	Sy	Sxy	Sint	Allowable Stress	Margin of Safety
1	97	0.58	0.25	-0.35	0.81	28.05	33.75
2	101	0.58	0.25	0.35	0.81	28.05	33.75
3	100	0.58	0.25	0.35	0.81	28.05	33.75
4	104	0.58	0.25	-0.35	0.81	28.05	33.75
5	102	0.29	0.56	0.35	0.79	28.05	34.42
6	98	0.29	0.56	-0.35	0.79	28.05	34.42
7	103	0.29	0.56	-0.35	0.79	28.05	34.42
8	99	0.29	0.56	0.35	0.79	28.05	34.42
9	71	0.36	0.24	0.20	0.51	24.71	47.68
10	25	0.36	0.24	-0.20	0.51	24.71	47.68
11	26	0.36	0.24	0.20	0.51	24.71	47.68
12	72	0.36	0.24	-0.20	0.51	24.71	47.68
13	60	0.24	0.36	0.20	0.51	24.71	47.68
14	33	0.24	0.36	-0.20	0.51	24.71	47.68
15	37	0.24	0.36	0.20	0.51	24.71	47.68

1. Section cut locations shown in Figure 3.A.5-4
2. Allowable stress based on highest computed temperature at section

Table 3.A.5-16 $P_m + P_b + Q$ Stresses for Support Disk, Normal Handling (ksi)

Number	Section Location	Sx	Sy	Sxy	Sint	Allowable Stress	Margin of Safety
1	97	44.91	21.78	-15.86	52.97	56.10	0.06
2	100	44.91	21.78	15.86	52.97	56.10	0.06
3	101	44.91	21.78	15.86	52.97	56.10	0.06
4	104	44.91	21.78	-15.86	52.97	56.10	0.06
5	98	18.44	38.58	-15.20	46.74	56.10	0.20
6	99	18.44	38.58	15.20	46.74	56.10	0.20
7	102	18.44	38.58	15.20	46.74	56.10	0.20
8	103	18.44	38.58	-15.20	46.74	56.10	0.20
9	24	-17.52	-9.84	-1.18	17.69	52.88	1.99
10	27	-17.52	-9.84	1.18	17.69	52.88	1.99
11	70	-17.52	-9.84	1.18	17.69	52.88	1.99
12	73	-17.52	-9.84	-1.18	17.69	52.88	1.99
13	13	-9.83	-17.50	1.17	17.67	52.88	1.99
14	9	-9.83	-17.50	-1.17	17.67	52.88	1.99
15	84	-9.83	-17.50	1.17	17.67	52.88	1.99

1. Section cut locations shown in Figure 3.A.5-4
2. Allowable stress based on highest computed temperature at section

3.A.5.2 Vertical Concrete Cask Analyses

The stresses in the Vertical Concrete Cask (VCC) to be evaluated in this section are for normal conditions of storage. The design of the VCC for the UNITAD Storage System closely follows the concrete cask design for the NAC-UMS® Storage System. Given that the margins of safety reported in UMS® FSAR Table 3.4.4.2-2 for the normal condition are large, the similarity of the two designs confirms that the concrete cask design for the UNITAD Storage System will also be acceptable.

3.A.5.2.1 Dead Load

The VCC dead load evaluation is based on a bounding weight of the VCC. The dead load of the VCC is resisted by the lower concrete surface only. The concrete compression stress due to the weight of the VCC (dead load) is:

$$\sigma_v = -W/A = -26 \text{ psi (compression)}$$

where:

W = 250,000 lb bounding maximum weight for empty VCC, with lid and optional lifiting lugs

OD = 136.0 in. concrete exterior diameter

ID = 80 in. concrete interior diameter

$A = \pi (OD^2 - ID^{2)} / 4 = 9500 \text{ in.}^2$

This evaluation of stress at the base of the concrete conservatively considers the total weight of the empty concrete cask, rather than the concrete alone. (This approach conservatively includes the weight of the base weldment, which is not supported by the concrete). The weight of the Canister is not supported by the concrete.

The concrete compressive stress due to dead load is evaluated in the combined loadings analysis in Tables 3.A.5-17 through 3.A.5-19.

3.A.5.2.2 Live Load

The VCC is subjected to three live loads: the volcanic ash load, snow load and the weight of the fully loaded transfer cask resting atop the module. These loads are conservatively assumed to be applied to the concrete portion of the module. No loads are assumed to be taken by the VCC's steel liner. The loads from the Canister and its contents are transferred to the steel support (base

weldment) inside the module and are not applied to the concrete. The stress in the steel support (base weldment) is evaluated in Section 3.4.3.1. Under these conditions, the only stress component is the vertical compression stress.

Volcanic Ash Load

The calculated volcanic ash load and the resulting stresses are the same for all of the VCC configurations because the top surface area is the same for all configurations. The volcanic ash load is = 21.0 lb/ft^2 per DOE/RW-0585 "Transportation, Aging and Disposal Canister System Performance, Rev.1," Section 3.3.2 (4).

The uniformly distributed volcanic ash load w_{ash} on the top of the concrete cask is

$$w_{ash} = 21.0 \text{ lb/ft}^2 = 21.0 / 144 = 0.1458 \text{ lb/ in}^2$$

The concrete cask top area is

$$A_{top} = \pi (D/2)^2 = 14{,}527 \text{ in}^2 = 100.9 \text{ ft}^2$$

The maximum ash load, W_{ash} is

$$W_{ash} = w_{ash} \times A_{top} = 0.1458 \text{ lbf/in}^2 \times (14{,}527 \text{ in}^2) = 2118 \text{ lbf.}$$

Snow Load

The calculated snow load and the resulting stresses are the same for all of the VCC configurations because the top surface area is the same for all configurations. The snow load on the VCC is 100 lb/ft^2, for a daily snowfall of 6.0 inches.

$$w_{snow} = 100.0 \text{ lb/ft}^2 = 100.0 / 144 = 0.6944 \text{ lb/ in}^2$$ --Snow load, for 6.0 inch depth of snow

An upper bound on the depth of snow on the cask top is taken as the maximum monthly snowfall.

$$d_{snow} = 6.6 \text{ inches} = 0.55 \text{ ft}$$

The concrete cask top area is

$$A_{top} = \pi (D/2)^2 = 14{,}527 \text{ in.}^2$$

The weight of snow for the maximum monthly snowfall of 6.6 inches is

$$W_{snow} = 0.6944 \text{ lb/in}^2 \text{ x } (6.6/6.0) \text{ x } 14{,}527 \text{ in}^2 = 11{,}096 \text{ lb}$$

The snow load is uniformly distributed over the top surface of the concrete cask.

Transfer Cask Load

The live load of the heaviest loaded transfer cask is bounded by the weight used in this analysis. The calculated transfer cask load and the resulting stresses are the same for all of the VCC configurations because the top surface area is the same for each configuration.

$$W_{Transfer\ Cask} = 200{,}000 \text{ lb-bounding transfer cask weight (fully loaded)}$$

The concrete cask cross-sectional area is:

D = 136.0 in.-concrete exterior diameter
ID = 80 in.-concrete interior diameter
A $= \pi (D^2 - ID^2)/4 = 9500 \text{ in.}^2$

The sum of live loads is:

$$W = (W_{Transfer\ Cask} + W_{ash} + W_{snow}) = (200{,}000 + 2118 + 11{,}096) = 213{,}214 \text{ lb}$$

Compression stress at the base of the concrete due to the live load is:

$$\sigma_v = (W_{Transfer\ Cask} + W_{ash} + W_{snow})/A = 213{,}214 \text{ lb} / 9500 \text{ in}^2. = -22.0 \text{ psi (compressive)}$$

The concrete compressive stress due to live loads is evaluated in the combined loadings analysis in Tables 3.A.5-17 through 3.A.5-19.

3.A.5.2.3 Thermal Load

Thermal stresses in the concrete cask are determined by hand calculation using formulas presented in Roark 6th Ed., Chapter 15, "Dynamic and Temperature Stress" for the case of a hollow cylinder with thick walls, with its outer surface at a uniform temperature T and the inner surface at a uniform temperature T + ΔT. The formulas determine the maximum tension and compression stresses in the hollow cylinder, which occur at the outer and inner surfaces of the hollow cylinder, respectively. The values calculated are true for both circumferential and longitudinal stress. The formulas are applied assuming the cask to consist only of concrete, ignoring the rebar and steel inner liner.

Additionally, the effect of expansion of the steel liner due to temperature change from its stress-free condition was determined using a finite element analysis. Expansion of the steel liner exerts pressure on the inner concrete surface, resulting in a radial stress in the concrete.

Thermal stresses in the VCC were evaluated for a Normal Condition, 76°F ambient with insolation, and an Accident Condition, 133°F ambient with insolation.

The thermal stress evaluations are based on the temperature difference (ΔT) between the outer surface temperature of the concrete and the inner surface temperature of the concrete, at the cask height location where the temperature difference is greatest. Temperature distributions were determined in Section 4.A.4.1.1.

	CASE 1 Normal Condition 76°F ambient, with insolation	**CASE 2** Accident Condition 133°F ambient, with insolation
Maximum ΔT, between inner and outer concrete surfaces, at the cask height where ΔT is maximum	67 °F	88 °F

Thermal Compressive Stresses

The concrete component of the shell carries the compressive loads in both the circumferential and the vertical direction. All compressive loads are assumed to be carried by the concrete; the contributions of the steel inner liner and the inner reinforcing bars in resisting compressive loads

are conservatively ignored. The compressive stress determined by the Roark equation is the maximum circumferential and longitudinal (vertical) compressive stress in the hollow concrete cylinder. The maximum compressive stress value occurs at the inner surface of the hollow concrete cylinder.

The maximum compressive stress for the normal condition is:

$$\sigma_c = \frac{\Delta T \alpha E}{2(1-v)(\log_e(c/b))}\left[1-\frac{2c^2}{c^2-b^2}\log_e\frac{c}{b}\right] = -0.914 \text{ ksi} = -914 \text{ psi}$$

where:

$\Delta T = 67°F$ ---------- Temperature difference between inner and outer surfaces of the hollow concrete cylinder, for the normal condition

$\alpha = 5.5\times10^{-6}$ in/in/°F ----------Coefficient of Thermal Expansion, for concrete

$E = 3.38\times10^{3}$ ksi ----------Modulus of Elasticity, for concrete at 200°F

$v = 0.20$----------Poisson's ratio

$b = 80 \text{ in} / 2 = 40.0 \text{ in}$----------Inner radius of concrete

$c = 136.0 \text{ in} / 2 = 68.0 \text{ in}$----------Outer radius of concrete

The maximum compressive stress for the accident condition is:

$$\sigma_c = \frac{\Delta T \alpha E}{2(1-v)(\log_e(c/b))}\left[1-\frac{2c^2}{c^2-b^2}\log_e\frac{c}{b}\right] = -1.200 \text{ ksi} = -1200 \text{ psi}$$

where:

$\Delta T = 88°F$ ---------- Temperature difference between inner and outer surfaces of the hollow concrete cylinder, for the accident condition

$\alpha = 5.5\times10^{-6}$ in/in/°F ----------Coefficient of Thermal Expansion, for concrete

$E = 3.38\times10^{3}$ ksi ----------Modulus of Elasticity, for concrete at 200°F

$v = 0.20$----------Poisson's ratio

b = 80 in / 2 = 40.0 in----------Inner radius of concrete
c = 136.0 in / 2 = 68.0 in----------Outer radius of concrete

The concrete compressive stresses due to normal and accident thermal loads are evaluated in the combined loadings analysis in Tables 3.A.5-17 through 3.A.5-19.

Thermal Tensile Stresses

The VCC concrete module carries tensile loads in both the circumferential and the vertical direction. All tensile loads are assumed to be carried by the reinforcing bars; the contribution of the concrete in resisting tensile loading is conservatively ignored. Therefore, the maximum tensile stress calculated by the Roark equation is converted to circumferential and longitudinal (vertical) tensile loads, which are applied to the nearest hoop and vertical rebars, respectively.

An illustration of the reinforcement bars is shown in Figure 3.A.5-5. The VCC has two sets of vertical reinforcement. Near the inner radius of the module there are 24 vertical reinforcement bars. Near the outer radius, there are 56 vertical reinforcement bars. There are two sets of circumferential reinforcement. Near the inner radius of the module, there are 13 circumferential (hoop) reinforcement bars spaced 16 inches apart for the Type 1 configuration (12 circumferential (hoop) reinforcement bars spaced 16 inches apart for the Type 2 configuration). Near the outer radius, there are 50 circumferential (hoop) reinforcement bars spaced 4 inches apart for the Type 1 configuration (48 circumferential (hoop) reinforcement bars spaced 16 inches apart for the Type 2 configuration).

The load centers of the circumferential tensile loads are located close to the outer hoop rebar locations, and similarly, the load centers of the longitudinal (vertical) tensile loads are located close to the outer vertical rebar locations.

The tensile stress determined by the Roark equation is the maximum circumferential and longitudinal (vertical) tensile stress in the hollow concrete cylinder.

The maximum tensile stress for the normal condition is:

$$\sigma_t = \frac{\Delta T \alpha E}{2(1-v)(\log_e(c/b))}\left[1 - \frac{2b^2}{c^2 - b^2}\log_e\frac{c}{b}\right] = 0.643 \text{ ksi} = 643 \text{ psi}$$

where:

$\Delta T = 67°F$ ---------- Temperature difference for normal condition

$\alpha = 5.5x10^{-6}$ in/in/°F ----------Coefficient of Thermal Expansion, for concrete

$E = 3.38x10^{3}$ ksi ----------Modulus of Elasticity, for concrete at 200°F

$v = 0.20$ ----------Poisson's ratio

$b = 80$ in / 2 = 40.0 in----------Inner radius of concrete

$c = 136.0$ in / 2 = 68.0 in----------Outer radius of concrete

The maximum tensile stress for the accident condition is:

$$\sigma_t = \frac{\Delta T \alpha E}{2(1-v)(\log_e(c/b))}\left[1-\frac{2b^2}{c^2-b^2}\log_e\frac{c}{b}\right] = 0.845 \text{ ksi} = 845 \text{ psi}$$

where:

$\Delta T = 88°F$ ---------- Temperature difference for normal condition

$\alpha = 5.5x10^{-6}$ in/in/°F ----------Coefficient of Thermal Expansion, for concrete

$E = 3.38x10^{3}$ ksi ----------Modulus of Elasticity, for concrete at 200°F

$v = 0.20$ ----------Poisson's ratio

$b = 80$ in / 2 = 40.0 in----------Inner radius of concrete

$c = 136.0$ in / 2 = 68.0 in----------Outer radius of concrete

The maximum tensile stress value occurs at the outer concrete surface. The maximum tensile stress calculated was converted to circumferential and longitudinal (vertical) tensile loads which were applied to the outer circumferential (hoop) and vertical reinforcing bars, respectively. The tensile loads were proportioned based on rebar spacing, to determine the maximum load on a single hoop and a single vertical reinforcing bar.

The maximum circumferential tensile load acting on a single outer hoop bar for the normal condition is:

$$F_{t\theta\ applied} = 14{,}868 \text{ lbf}$$

The allowable stress for rebar is:

$$S_{rebar} = \phi F_r = 0.9 \times 60.0 = 54.0 \text{ ksi}$$

where:

ϕ = 0.9 Strength Reduction Factor

F_r = 60.0 ksi Yield Stress, A615 Grade 60 Rebar

The rebar tensile load capacity is:

$$F_{rebar\,\theta} = S_{rebar}\, A_{\#6} = (54{,}000)\,(0.44) = 23{,}760 \text{ lbf}$$

where

$A_{\#6}$ = Cross Section Area of #6 Rebar = 0.44 in^2

A 1.05 load factor is applied for thermal loads for normal conditions. Accordingly,

$$1.05\, F_{t\theta\ applied} = 1.05(14{,}868) = 15{,}611 \text{ lbf}$$

The Factor of Safety for outer hoop rebar, for circumferential tensile loads with load factor for the normal condition is:

$$FS = \frac{F_{rebar\theta}}{1.05 F_{t\theta applied}} = (23760 / 15{,}611) = 1.52$$

The maximum circumferential tensile load acting on a single outer hoop bar for the accident condition is:

$$F_{t\theta\ applied} = 19{,}552 \text{ lbf}$$

The allowable stress for rebar is:

$$S_{rebar} = \phi F_r = 0.9 \times 60.0 = 54.0 \text{ ksi}$$

where:

ϕ = 0.9 Strength Reduction Factor

F_r = 60.0 ksi Yield Stress, A615 Grade 60 Rebar

The rebar tensile load capacity is:

$$F_{rebar\ \theta} = S_{rebar}\ A_{\#6} = (54{,}000)\ (0.44) = 23{,}760 \text{ lbf}$$

where

$A_{\#6}$ = Cross Section Area of #6 Rebar = 0.44 in^2

A 1.00 load factor is applied for thermal loads for accident conditions. Accordingly,

$$1.00\ F_{t\theta\ applied} = 1.00(19{,}552) = 19{,}552 \text{ lbf}$$

The Factor of Safety for outer hoop rebar, for circumferential tensile loads with load factor for the accident condition is:

$$FS = \frac{F_{rebar\theta}}{1.00F_{t\theta applied}} = (23760 / 19{,}552) = 1.22$$

The maximum vertical tensile load acting on a single outer hoop bar for the normal condition is:

$F_{v\ applied}$ = F_v' / 56 = 26,783 lbf, per outer vertical rebar.

The allowable stress for rebar is:

S_{rebar} = $\phi F_r = 0.9 \times 60.0 = 54.0$ ksi

where:

ϕ = 0.9

F_r = 60.0 ksi Yield Stress, A615 Grade 60 Rebar

The rebar tensile load capacity of #8 rebar is:

$$F_{rebar\ v} = S_{rebar}\ A_{\#8} = (54{,}000)\ (0.7854) = 42{,}412 \text{ lbf}$$

where

$A_{\#8}$ = #8 Rebar area = 0.7854 in.^{2}

$\sigma_{v\ allowable}$ =Uc = $\phi\ S_y$ =0.90 (60) = 54 ksi

A 1.05 load factor is applied for thermal loads for normal conditions. Accordingly,

$1.05\ F_{tv\ applied} = 1.05(26{,}783) = 28{,}122$ lbf

The Factor of Safety for outer vertical rebar, for vertical tensile loads with load factor for the normal condition is:

$$FS = \frac{F_{rebarv}}{1.05F_{tvapplied}} = (42{,}412 / 28{,}122) = 1.51$$

The maximum vertical tensile load acting on a single outer hoop bar for the accident condition is:

$F_{v\ applied} = F_v' / 56 = 35{,}211$ lbf, per outer vertical rebar.

The allowable stress for rebar is:

$S_{rebar} = \phi F_r = 0.9 \times 60.0 = 54.0$ ksi

where:

ϕ = 0.9

F_r = 60.0 ksi Yield Stress, A615 Grade 60 Rebar

The rebar tensile load capacity of #8 rebar is:

$F_{rebar\ v} = S_{rebar}\ A_{\#8} = (54{,}000)\ (0.7854) = 42{,}412$ lbf

where

$A_{\#8}$ = #8 Rebar area = 0.7854 in.^{2}

$\sigma_{v\ allowable} = Uc = \phi\ S_y = 0.90\ (60) = 54$ ksi

A 1.00 load factor is applied for thermal loads for accident conditions. Accordingly,

$1.00\ F_{tv\ applied} = 1.00(35{,}211) = 35{,}211$ lbf

The Factor of Safety for outer vertical rebar, for vertical tensile loads with load factor for the accident condition is:

$$FS = \frac{F_{rebarv}}{1.00F_{tvapplied}} = (42{,}412 / 35{,}211) = 1.20$$

The tensile loads in reinforcing bars and related factors of safety are summarized in Table 3.A.5-20.

Radial Stress due to Expansion of the Steel Liner

Expansion of the steel liner due to temperature change from its stress-free condition exerts pressure on the inner concrete surface, resulting in a radial stress in the concrete.

Radial stresses were determined by finite element analysis. A simple axisymmetric finite element model was developed which consists of two-dimensional solid elements for the steel liner and concrete shell. The model considers the inner steel liner and concrete shell. The inner radius of the steel liner is 37.0 inches, the steel liner thickness is 3.0 inches, and the outer concrete radius is 68.0 in. The nodes at the steel liner /concrete interface are coincident and are connected analytically by coupling the radial displacement degree of freedom. The model geometry is shown in Figure 3.A.5-6.

This model obtains both a thermal solution and a structural solution. ANSYS PLANE55 elements are used for the thermal solution. PLANE42 elements are used for the structural solution.

The thermal model uses temperature data from Section 4.A.4.1.1, for the accident condition (133°F ambient). The reference temperature (for stress-free condition) is 70°F. For the steady state temperature condition, the steel liner is set to the temperature of concrete inner surface (274°F) at the cask height which has the greatest temperature difference between the inner and outer surfaces of the concrete. For the steady-state temperature condition, a linear temperature distribution is imposed on the concrete, ranging from the concrete inner surface temperature of 274°F to the concrete outer surface temperature of 186°F. (Both temperatures are at the cask height which has the greatest temperature difference between the inner and outer surfaces of the concrete).

The structural solution uses the same axisymmetric model with two-dimensional solid structural elements.

The structural model is subject to the following Displacement Boundary Conditions:

Along y = 0:

$U_y = 0$

Along y=1 (the top edge of the model):

Uy of all steel liner nodes are coupled together

Uy of all concrete nodes are coupled together

At the steel liner/concrete interface:

Ux (radial) degree of freedom is coupled for all coincident nodes at the steel/concrete interface.

The radial stress varies through the concrete wall, from maximum at the concrete inner surface, to zero at the concrete outer surface. The maximum interior stress of -477 psi occurs at the inner concrete surface. This is a bearing compressive stress due to applied loading from the steel liner. The radial compressive stress is varies to lower magnitudes through the wall thickness. The radial stress distribution through the VCC wall is illustrated in Figure 3.A.5-7.

Allowable concrete bearing stress is:

$$S_{bearing} = \phi F_c = (0.70)(3800) = 2{,}660 \text{ psi}$$

where:

$\phi = 0.70$

$F_c = 3800$ psi

Although the radial stress evaluation used a temperature distribution from the accident condition, the Factor of Safety will be conservatively calculated using the load factor for thermal loads for normal conditions (LF_{normal} = 1.05, rather than the load factor for accident conditions ($LF_{accident}$ = 1.00).

The thermally induced load radial stress of -477 psi when factored by 1.05 load factor represents a peak potential stress of -501 psi at the inner concrete shell surface.

The Factor of Safety is:

$$FS = (2{,}660 / 501) = 5.3$$

Therefore, the maximum radial stress at the inner section is of small magnitude compared to the allowable.

Figure 3.A.5-5 VCC Reinforcing Bar Arrangement

Figure Withheld Under 10 CFR 2.390

Figure 3.A.5-6 VCC Axisymmetric Model Geometry

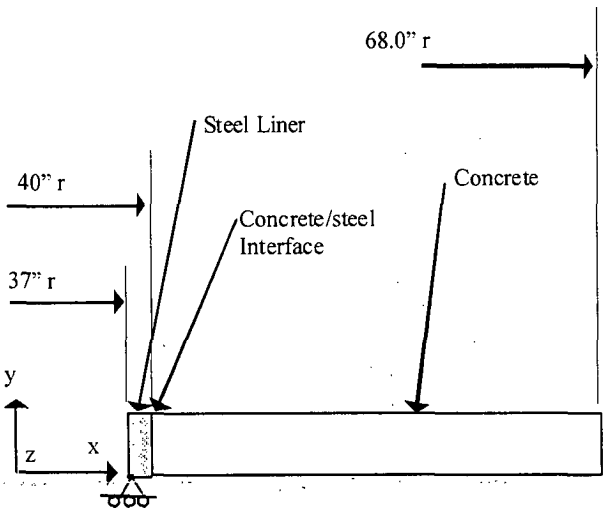

Figure 3.A.5-7 Radial Stress Distribution through VCC Wall

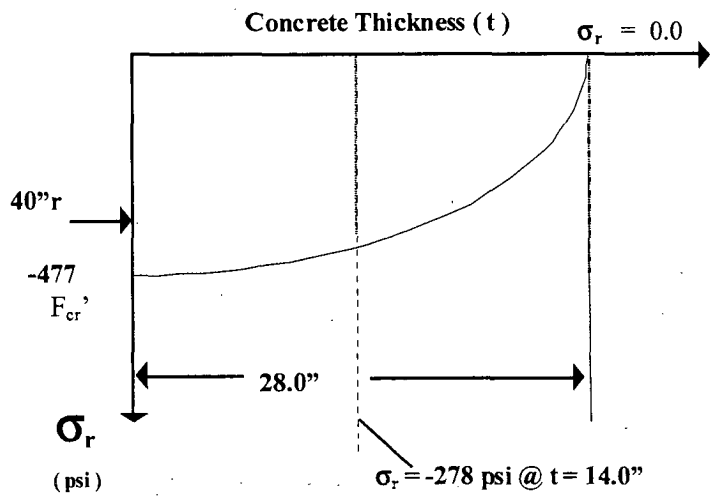

3.A.5.2.4 Combined Loads and Maximum Concrete and Rebar Stresses

Load combinations for concrete stresses are from ANSI 349-85 Section 9.2 [4] and are contained in the following tables:

Table 3.A.5-17	Load Combinations for Concrete Cask
Table 3.A.5-18	Summary of Maximum Stresses for VCC Load Combinations
Table 3.A.5-19	Maximum Concrete Stresses
Table 3.A.5-20	Maximum Reinforcing Bar Loads

Table 3.A.5-17 Load Combinations for Concrete Cask

Load Combination	Dead	Live	Wind	Temperature (Normal)	Temperature (Due to pipe breakage)	Seismic (operating basis earthquake)	Seismic (safe shutdown / extreme)	Tornado	Flood
1	1.4D	1.7L							
2	1.4D	1.7L				1.7Eo			
3	1.4D	1.7L	1.7W						
4	1.0D	1.0L		$1.0T_O$			$1.0E_{ss}$		
5	1.0D	1.0L		$1.0T_O$				$1.0W_t$	
5A	1.0D	1.0L		$1.0T_O$					1.0FL
6	1.0D	1.0L			$1.0T_A$				
7	1.0D	1.0L			$1.0T_A$	1.15Eo			
8	1.0D	1.0L			$1.0T_A$		$1.0E_{ss}$		
9	1.05D	1.3L		$1.05T_O$					
10	1.05D	1.3L		$1.05T_O$		1.3Eo			
11	1.05D	1.3L	1.3W	$1.05T_O$					

D = Dead load
E_o = Earthquake, operating basis
E_{ss} = Earthquake, safe shutdown
FL = Flood load
L = Live load
T_A = Accident temperature
T_O = Normal Temperature
W = Wind load
W_t = Tornado

Note: The following loads referenced in ANSI 349-85 Section 9.2 are all zero for the VCC structural evaluation, and therefore have not been included in the load combination table:

F – Pressure of Liquids
H – Lateral earth pressure
Ro – Piping and Equipment reactions
Ra – Piping and Equipment reactions under pipe breakage
Pa – Differential pressure load due to pipe breakage
Yj – Jet impingement due to pipe breakage
Ym – Missile impact load due to pipe breakage
Yr – Reaction loads during pipe breakage

Table 3.A.5-18 Summary of Maximum Stresses for VCC Load Combinations

Load Combi-nation	Stress Direction	Stress [b] (psi)								
		Dead	Live	Wind[c]	Thermal To[d]	Thermal Ta	Seismic (obe)[f]	Seismic (ss)[g]	Tornado[h] / Flood	Total
Concrete Outside Surface:										
1	Vertical	-36	-37							-73
2	Vertical	-36	-37				-296			-369
3	Vertical	-36	-37	-43						-116
4	Vertical	-26	-22		0			-174		-222
5	Vertical	-26	-22		0				-25	-73
5A	Vertical	-26	-22		0				-17	-65
6	Vertical	-26	-22			0				-48
7	Vertical	-26	-22			0	-200			-248
8	Vertical	-26	-22			0		-174		-222
9	Vertical	-27	-29		0					-56
10	Vertical	-27	-29		0		-226			-282
11	Vertical	-27	-29	-33	0					-89
Concrete Inside Surface:										
1	Vertical	-36	-37							-73
	Circumferential	0	0							0
2	Vertical	-36	-37				-211			-284
	Circumferential	0	0				0			0
3	Vertical	-36	-37	-26						-99
	Circumferential	0	0	0						0
4	Vertical	-26	-22		-914			-124		-1086
	Circumferential	0	0		-914			0		-914
5	Vertical	-26	-22		-914				-15	-977
	Circumferential	0	0		-914				0	-914
5A	Vertical	-26	-22		-914				-10	-972
	Circumferential	0	0		-914				0	-914
6	Vertical	-26	-22			-1200				-1248
	Circumferential	0	0			-1200				-1200
7	Vertical	-26	-22			-1200	-143			-1391
	Circumferential	0	0			-1200	0			-1200
8	Vertical	-26	-22			-1200		-124		-1372
	Circumferential	0	0			-1200		0		-1200
9	Vertical	-27	-29		-960					-1016
	Circumferential	0	0		-960					-960
10	Vertical	-27	-29		-960		-161			-1177
	Circumferential	0	0		-960		0			-960

Table 3.A.5-18 Summary of Maximum Stresses for VCC Load Combinations (cont'd)

Load Combi-nation	Stress Direction	Stress [b] (psi)								
		Dead	Live	Wind[c]	Thermal To[d]	Thermal Ta	Seismic (obe)[f]	Seismic (ss)[g]	Tornado[h] / Flood	Total
Concrete Inside Surface:										
11	Vertical	-27	-29	-20	-960					-1036
	Circumferential	0	0	0	-960					-960

Notes:

[a] Not used.

[b] Positive stress values indicate tensile stresses and negative values indicate compressive stresses.

[c] Stress results from Appendix 11.A for Tornado Wind loads are conservatively used with a load factor of 1.7 for Wind for load combination No.3 and a load factor of 1.3 for Wind for load combination No. 11.

[d] Tensile stresses are taken by the steel reinforcing bars and, therefore, are not shown in this Table.

[e] Not used.

[f] No separate evaluation was performed for an Operating Basis Earthquake. It is assumed that the magnitude of an OBE will be lower than the 0.5g seismic event used to calculate Safe Shutdown Earthquake Loads. It is conservative to set $E_o = E_{ss}$, because higher load factors (multipliers) are used for E_o which result in higher combined stresses.

[g] Stress results are obtained from Appendix 11.A (Earthquake). Earthquake loads are determined based on a 0.5g seismic event, which results in greater stresses than the specified 0.25g seismic event. Earthquake stresses determined based on the 0.5g seismic event are treated as E_{ss} – Safe Shutdown Earthquake Loads for the purposed of calculating load combinations.

[h] Stress results are obtained from Appendix 11.A. Tornado Wind loads are applicable to load combination #5. Flood loads are applicable to load combination #5A.

Table 3.A.5-19 Maximum Concrete Stresses

	Calculated (psi)	Allowable[1] (psi)	Factor of Safety
Concrete	1391	2660	+1.91

[1] Allowable compressive stress for concrete is (0.7)(3,800 psi)=2660 psi, where 0.7 is the strength reduction factor per ACI-349-85, Section 9.3, and 3800 psi is the nominal concrete strength at 300°F.

Table 3.A.5-20 Maximum Reinforcing Bar Loads

	Calculated (lb)	Allowable[1] (lb)	Factor of Safety
Reinforcing Bar			
Normal - vertical	28,122	42,412	1.51
- hoop	15,611	23,760	1.52
Accident - vertical	35,211	42,412	1.20
- hoop	19,552	23,760	1.22

[1] Allowable loads for reinforcing bars are determined earlier in this Section.

THIS PAGE INTENTIONALLY LEFT BLANK

3.A.6 Cold

The cold environment evaluation of the NAC-UMS® Storage System contained in FSAR Section 3.4.5 envelops that of the UNITAD Storage System.

Severe cold environments are evaluated in Section 11.A.1.1. Stress intensities corresponding to thermal loads in the Canister are evaluated by using a finite element model as described in Section 3.A.5.1.1. The thermal stresses that occur in the Canister as a result of the maximum off-normal temperature gradients in the Canister are bounded by the analysis of extreme cold in Section 11.A.1.1.

The PWR Canister and basket are fabricated from stainless steel and aluminum, which are not subject to a ductile-to-brittle transition in the temperature range of interest. The transfer cask is fabricated using carbon steel, and the low temperature handling limits for the transfer cask are defined in ANSI 14.6 and NUREG 0612.

THIS PAGE INTENTIONALLY LEFT BLANK

3.A.7 Fuel Rods

The fuel cladding temperature evaluation of the NAC-UMS® Storage System contained in FSAR Section 3.5 is representative of that of the UNITAD Storage System.

The UNITAD is designed to limit fuel cladding temperatures to levels below those where zirconium alloy degradation is expected to lead to fuel clad failure. As shown in Chapter 4, fuel cladding temperature limits for PWR fuel have been established at 400°C defined in ISG-11 ([37] in Chapter 4) for normal conditions of storage and 570°C for short-term off-normal and accident conditions.

As shown in Table 4.A.1-1, the calculated maximum fuel cladding temperatures are well below the temperature limits for all design conditions of storage.

THIS PAGE INTENTIONALLY LEFT BLANK

3.A.8 References

The UNITAD Storage System references are the same as those for the NAC-UMS® Storage System in FSAR Section 3.7, except that ASME Boiler and Pressure Vessel Code, 2004 Edition, including 2006 Addenda, will be used.

44. ISG-15, "Materials Evaluation," Interim Staff Guidance-15, Nuclear Regulatory Commission, January 2001.

45. Tuma, J.J., "Engineering Mathematics Handbook, 1987," McGraw-Hill Book Company.

46. Carpenter Technologies Specification Sheet for MicroMelt NeutroSorb Plus Borated Stainless Steel Alloys – UNS Number S30460-47, Edition Date: September 8, 2003.

THIS PAGE INTENTIONALLY LEFT BLANK

3.A.9 Coatings Specifications

The carbon steel coatings technical data presented in FSAR Section 3.8 for the NAC-UMS® Storage System also covers the UNITAD Storage System components, as applicable.

THIS PAGE INTENTIONALLY LEFT BLANK

Table of Contents

4.0 THERMAL EVALUATION 4.1-1

4.1 Discussion 4.1-1

4.2 Summary of Thermal Properties of Materials 4.2-1

4.3 Technical Specifications for Components 4.3-1

4.4 Thermal Evaluation for Normal Conditions of Storage 4.4-1
- 4.4.1 Thermal Models 4.4.1-1
  - 4.4.1.1 Two-Dimensional Axisymmetric Air Flow and Concrete Cask Models 4.4.1-3
  - 4.4.1.2 Three-Dimensional Canister Models 4.4.1-14
  - 4.4.1.3 Three-Dimensional Transfer Cask and Canister Models 4.4.1-27
  - 4.4.1.4 Three-Dimensional Periodic Canister Internal Models 4.4.1-31
  - 4.4.1.5 Two-Dimensional Fuel Models 4.4.1-35
  - 4.4.1.6 Two-Dimensional Fuel Tube Models 4.4.1-38
  - 4.4.1.7 Two-Dimensional Forced Air Flow Model for Transfer Cask Cooling 4.4.1-44
- 4.4.2 Test Model 4.4.2-1
- 4.4.3 Maximum Temperatures for PWR and BWR Fuel 4.4.3-1
  - 4.4.3.1 Maximum Temperatures at Reduced Total Heat Loads 4.4.3-2
- 4.4.4 Minimum Temperatures 4.4.4-1
- 4.4.5 Maximum Internal Pressures 4.4.5-1
  - 4.4.5.1 Maximum Internal Pressure for PWR Fuel Canister 4.4.5-1
  - 4.4.5.2 Maximum Internal Pressure for BWR Fuel Canister 4.4.5-3
- 4.4.6 Maximum Thermal Stresses 4.4.6-1
- 4.4.7 Evaluation of System Performance for Normal Conditions of Storage 4.4.7-1

Table of Contents (Continued)

4.5 Thermal Evaluation for Site Specific Spent Fuel 4.5-1
4.5.1 Maine Yankee Site Specific Spent Fuel 4.5-1
4.5.1.1 Thermal Evaluation for Maine Yankee Site Specific Spent Fuel 4.5-3
4.5.1.2 Preferential Loading with Higher Heat Load (1.05 kW) at the Basket Periphery 4.5-17

4.6 References 4.6-1

Appendix 4.A THERMAL EVALUATION UNITAD Storage System 4.A-i

List of Figures

Figure 4.3-1 PWR Heat Transfer Disk Model for Normal Handling Condition 4.3-2
Figure 4.3-2 BWR Heat Transfer Disk Model for Normal Handling Condition 4.3-3
Figure 4.4.1.1-1 Two-Dimensional Axisymmetric Air Flow and Concrete Cask Model: PWR 4.4.1-10
Figure 4.4.1.1-2 Two-Dimensional Axisymmetric Air Flow and Concrete Cask Finite Element Model: PWR 4.4.1-11
Figure 4.4.1.1-3 Axial Power Distribution for PWR Fuel 4.4.1-12
Figure 4.4.1.1-4 Axial Power Distribution for BWR Fuel 4.4.1-13
Figure 4.4.1.2-1 Three-Dimensional Canister Model for PWR Fuel 4.4.1-19
Figure 4.4.1.2-2 Three-Dimensional Canister Model for PWR Fuel - Cross Section 4.4.1-20
Figure 4.4.1.2-3 Three-Dimensional Canister Model for BWR Fuel 4.4.1-21
Figure 4.4.1.2-4 Three-Dimensional Canister Model for BWR Fuel - Cross Section 4.4.1-22
Figure 4.4.1.3-1 Three-Dimensional Transfer Cask and Canister Model - PWR 4.4.1-29
Figure 4.4.1.3-2 Three-Dimensional Transfer Cask and Canister Model - BWR 4.4.1-30
Figure 4.4.1.4-1 Three-Dimensional Periodic Canister Internal Model - PWR 4.4.1-33
Figure 4.4.1.4-2 Three-Dimensional Periodic Canister Internal Model - BWR 4.4.1-34
Figure 4.4.1.5-1 Two-Dimensional PWR (17 × 17) Fuel Model 4.4.1-37
Figure 4.4.1.6-1 Two-Dimensional Fuel Tube Model: PWR Fuel 4.4.1-41
Figure 4.4.1.6-2 Two-Dimensional Fuel Tube Model: BWR Fuel Tube with Neutron Absorber 4.4.1-42
Figure 4.4.1.6-3 Two-Dimensional Fuel Tube Model: BWR Fuel Tube without Neutron Absorber 4.4.1-43
Figure 4.4.1.7-1 Two-Dimensional Axisymmetric Finite Element Model for Transfer Cask Forced Air Cooling 4.4.1-45
Figure 4.4.1.7-2 Two-Dimensional Axisymmetric Outlet Air Flow Model for Transfer Cask Cooling 4.4.1-46
Figure 4.4.1.7-3 Two-Dimensional Axisymmetric Inlet Air Flow Model for Transfer Cask Cooling 4.4.1-47
Figure 4.4.1.7-4 Nonuniform Heat Load from Canister Contents 4.4.1-48

List of Figures (continued)

Figure 4.4.1.7-5 Maximum Canister Temperature Versus Air Volume Flow Rate 4.4.1-49
Figure 4.4.3-1 Temperature Distribution (°F) for the Normal Storage Condition: PWR Fuel 4.4.3-6
Figure 4.4.3-2 Air Flow Pattern in the Concrete Cask in the Normal Storage Condition: PWR Fuel 4.4.3-7
Figure 4.4.3-3 Air Temperature (°F) Distribution in the Concrete Cask During the Normal Storage Condition: PWR Fuel 4.4.3-8
Figure 4.4.3-4 Concrete Temperature (°F) Distribution During the Normal Storage Condition: PWR Fuel 4.4.3-9
Figure 4.4.3-5 History of Maximum Component Temperature (°F) for Transfer Conditions for PWR Fuel with Design Basis 23 kW Uniformly Distributed Heat Load 4.4.3-10
Figure 4.4.3-6 History of Maximum Component Temperature (°F) for Transfer Conditions for BWR Fuel with Design Basis 23 kW Uniformly Distributed Heat Load 4.4.3-11
Figure 4.4.3-7 Basket Location for the Thermal Analysis of PWR Reduced Heat Load Cases 4.4.3-12
Figure 4.4.3-8 BWR Fuel Basket Location Numbers 4.4.3-13
Figure 4.5.1.1-1 Quarter Symmetry Model for Maine Yankee Consolidated Fuel 4.5-12
Figure 4.5.1.1-2 Maine Yankee Three-Dimensional Periodic Canister Internal Model 4.5-13
Figure 4.5.1.1-3 Evaluated Locations for the Maine Yankee Consolidated Fuel Lattice in the PWR Fuel Basket 4.5-14
Figure 4.5.1.1-4 Active Fuel Region in the Three-Dimensional Canister Model 4.5-15
Figure 4.5.1.1-5 Fuel Debris and Damaged Fuel Regions in the Three-Dimensional Canister Model 4.5-16
Figure 4.5.1.2-1 Canister Basket Preferential Loading Plan 4.5-19

List of Tables

Table 4.1-1 Summary of Thermal Design Conditions for Storage 4.1-4
Table 4.1-2 Summary of Thermal Design Conditions for Transfer 4.1-5
Table 4.1-3 Maximum Allowable Material Temperatures 4.1-6
Table 4.1-4 Summary of Thermal Evaluation Results for the Universal Storage System: PWR Fuel 4.1-7
Table 4.1-5 Summary of Thermal Evaluation Results for the Universal Storage System: BWR Fuel 4.1-8
Table 4.2-1 Thermal Properties of Solid Neutron Shield (NS-4-FR and NS-3) 4.2-2
Table 4.2-2 Thermal Properties of Stainless Steel 4.2-2
Table 4.2-3 Thermal Properties of Carbon Steel 4.2-3
Table 4.2-4 Thermal Properties of Chemical Copper Lead 4.2-3
Table 4.2-5 Thermal Properties of Type 6061-T651 Aluminum Alloy 4.2-3
Table 4.2-6 Thermal Properties of Helium 4.2-4
Table 4.2-7 Thermal Properties of Dry Air 4.2-4
Table 4.2-8 Thermal Properties of Zirconium Alloy Cladding 4.2-5
Table 4.2-9 Thermal Properties of Fuel (UO_2) 4.2-5
Table 4.2-10 Thermal Properties of BORAL Composite Sheet 4.2-6
Table 4.2-11 Thermal Properties of Concrete 4.2-6
Table 4.2-12 Thermal Properties of Water 4.2-7
Table 4.4.1.2-1 Effective Thermal Conductivities for PWR Fuel Assemblies 4.4.1-23
Table 4.4.1.2-2 Effective Thermal Conductivities for BWR Fuel Assemblies 4.4.1-24
Table 4.4.1.2-3 Effective Thermal Conductivities for PWR Fuel Tubes 4.4.1-25
Table 4.4.1.2-4 Effective Thermal Conductivities for BWR Fuel Tubes 4.4.1-26
Table 4.4.3-1 Maximum Component Temperatures for the Normal Storage Condition - PWR 4.4.3-14
Table 4.4.3-2 Maximum Component Temperatures for the Normal Storage Condition - BWR 4.4.3-15
Table 4.4.3-3 Maximum Component Temperatures for the Transfer Condition – PWR Fuel with Design Basis 23 kW Uniformly Distributed Heat Load 4.4.3-16

List of Tables (continued)

Table 4.4.3-4 Maximum Component Temperatures for the Transfer Condition – BWR Fuel with Design Basis 23 kW Uniformly Distributed Heat Load 4.4.3-16
Table 4.4.3-5 Maximum Limiting Component Temperatures in Transient Operations for the Reduced Heat Load Cases for PWR Fuel 4.4.3-17
Table 4.4.3-6 Maximum Limiting Component Temperatures in Transient Operations for the Reduced Heat Load Cases for PWR Fuel after In-Pool Cooling 4.4.3-18
Table 4.4.3-7 Maximum Limiting Component Temperatures in Transient Operations for the Reduced Heat Load Cases for PWR Fuel after Forced-Air Cooling 4.4.3-18
Table 4.4.3-8 Maximum Limiting Component Temperatures in Transient Operations for BWR Fuel 4.4.3-19
Table 4.4.3-9 Maximum Limiting Component Temperatures in Transient Operations after Vacuum for BWR Fuel after In-Pool Cooling 4.4.3-20
Table 4.4.3-10 Maximum Limiting Component Temperatures in Transient Operations after Vacuum for BWR Fuel after Forced-Air Cooling 4.4.3-20
Table 4.4.3-11 Maximum Limiting Component Temperatures in Transient Operations after Helium for BWR Fuel after In-Pool Cooling 4.4.3-21
Table 4.4.3-12 Maximum Limiting Component Temperatures in Transient Operations after Helium for BWR Fuel after Forced-Air Cooling .. 4.4.3-21
Table 4.4.3-13 Maximum Limiting Component Temperatures in Transient Operations after Helium for PWR Fuel after In-Pool Cooling 4.4.3-21
Table 4.4.3-14 Maximum Limiting Component Temperatures in Transient Operations after Helium for PWR Fuel after Forced-Air Cooling .. 4.4.3-22
Table 4.4.5-1 PWR Per Assembly Fuel Generated Gas Inventory (Fission Gas Basis – 60 GWd/MTU, 1.9 wt % ^{235}U) 4.4.5-4
Table 4.4.5-2 PWR Canister Free Volume (No Fuel or Inserts) 4.4.5-4
Table 4.4.5-3 PWR Maximum Normal Condition Pressure Summary 4.4.5-4
Table 4.4.5-4 BWR Per Assembly Fuel Generated Gas Inventory 4.4.5-5
Table 4.4.5-5 BWR Canister Free Volume (No Fuel or Inserts) 4.4.5-5
Table 4.4.5-6 BWR Maximum Normal Condition Pressure Summary 4.4.5-5

Appendix 4.A THERMAL EVALUATION
UNITAD Storage System

Table of Contents

Table of Contents 4.A-i
List of Figures 4.A-ii
List of Tables 4.A-iii

4.A THERMAL EVALUATION 4.A-1

4.A.1 Discussion – Thermal Design of the UNITAD Storage System 4.A.1-1

4.A.2 Summary of Thermal Properties of Materials 4.A.2-1

4.A.3 Specifications for Components 4.A.3-1

4.A.4 Thermal Evaluation of the UNITAD Storage System for Normal Conditions of Storage 4.A.4-1
4.A.4.1 Thermal Models 4.A.4-1
4.A.4.2 Test Model 4.A.4-26
4.A.4.3 Maximum Temperatures for PWR Fuel 4.A.4-27
4.A.4.4 Minimum Temperatures 4.A.4-30
4.A.4.5 Maximum Internal Pressures 4.A.4-31
4.A.4.6 Maximum Thermal Stresses 4.A.4-34
4.A.4.7 Evaluation of System Performance for Normal Conditions of Storage 4.A.4-35
4.A.4.8 Benchmark Evaluation of the Two-Dimensional Axisymmetric Methodology for Annular Cooling in the Concrete Cask for UNITAD 4.A.4-36

4.A.5 References 4.A.5-1

List of Figures

Figure 4.A.4.1.1-1 Solid Model for UNITAD Storage System (Canister and Concrete Cask) 4.A.4-7
Figure 4.A.4.1.1-2 FLUENT Computational Fluid Dynamics Model for UNITAD Storage System (Canister and Concrete Cask) 4.A.4-8
Figure 4.A.4.1.1-3 Fuel Power Distribution Curve 4.A.4-9
Figure 4.A.4.1.2-1 Quarter-Symmetry Three-Dimensional Transfer Cask and Canister Model 4.A.4-14
Figure 4.A.4.1.2-2 Model of the Transfer Cask 4.A.4-15
Figure 4.A.4.1.2-3 Modeling Details of the Quarter Symmetry Transfer Cask Model 4.A.4-16
Figure 4.A.4.1.3-1 Three-Dimensional Periodic Canister Internal Model 4.A.4-20
Figure 4.A.4.1.4-1 Two-Dimensional PWR (17×17) Fuel Model 4.A.4-22
Figure 4.A.4.1.4-2 Pin and Pellet Fuel Model 4.A.4-23
Figure 4.A.4.1.5-1 Two-Dimensonal Fuel Tube Model: PWR Fuel 4.A.4-25
Figure 4.A.4.8-1 Two-Dimensional Axisymmetric FLUENT Model of the VSC-17 ..... 4.A.4-41
Figure 4.A.4.8-2 ANSYS Model for Effective Properties Calculation 4.A.4-42
Figure 4.A.4.8-3 Temperature Profiles for the Canister Surface 4.A.4-43
Figure 4.A.4.8-4 Temperature Profiles for the Concrete Liner Surface 4.A.4-44

List of Tables

Table 4.A.1-1 Summary of Thermal Evaluation Results for the UNITAD Storage System Containing PWR Fuel 4.A.1-2
Table 4.A.4.1.1-1 Effective Thermal Properties for the Homogenized Basket 4.A.4-10
Table 4.A.4.1.2-1 Effective Thermal Properties for PWR Fuel Assemblies 4.A.4-17
Table 4.A.4.1.2-2 Effective Thermal Conductivities for PWR Fuel Tubes 4.A.4-18
Table 4.A.4.1.2-3 Borated Stainless Steel Thermal Properties 4.A.4-18
Table 4.A.4.3-1 Maximum Component Temperatures for the Normal Storage Condition 4.A.4-28
Table 4.A.4.3-2 Maximum Component Temperatures for the Transfer Condition (22kW) 4.A.4-29
Table 4.A.4.5-1 PWR Per Assembly Fuel Generated Gas Inventory 4.A.4-33
Table 4.A.4.5-2 PWR Canister Free Volume (No Fuel or Inserts) 4.A.4-33

THIS PAGE INTENTIONALLY LEFT BLANK

4.A THERMAL EVALUATION

This appendix presents the thermal design and analyses of the UNITAD Storage System for normal conditions of storage of design basis PWR spent nuclear fuel. Results of the analyses demonstrate that with the design basis contents, the UNITAD Storage System meets the thermal performance requirements of 10 CFR 72.

THIS PAGE INTENTIONALLY LEFT BLANK

4.A.1 Discussion – Thermal Design of the UNITAD Storage System

The discussion of the thermal design of the NAC-UMS® Storage System presented in FSAR Section 4.1 is applicable to the UNITAD Storage System.

The UNITAD Storage System design basis heat load is 22 kW for up to 21 PWR spent fuel assemblies. A summary of the thermal design conditions for storage and for transfer is presented in NAC-UMS® Storage System FSAR, Tables 4.1-1 and 4.1-2, respectively. The maximum allowable material temperatures are tabulated in FSAR Table 4.1-3. A summary of the thermal evaluation results for PWR fuel in the UNITAD Storage System is presented in Table 4.A.1-1.

The results demonstrate that the calculated temperatures are below the allowable component temperatures for all normal (long-term) storage conditions and for short-term events. The thermally induced stresses, combined with pressure and mechanical load stresses, are also within the allowable levels, as demonstrated in Appendix 3.A.

Table 4.A.1-1 Summary of Thermal Evaluation Results for the UNITAD Storage System Containing PWR Fuel

Long-Term Condition:						
	Maximum Temperatures (°F)					
Design Condition	Concrete Bulk	Concrete Local	Heat Transfer Disks	Support Disks	Canister	Fuel Clad
Normal (76°F Ambient)	137	195	644	649	380	691
Allowable	150	200	650	800	800	752

Short-Term Condition:					
	Maximum Temperatures (°F)				
Design Condition	Concrete	Heat Transfer Disks	Support Disks	Canister	Fuel Clad
Off-Normal - Half Inlets Blocked (76°F Ambient)	199	645	650	381	692
Off-Normal - Severe Heat (106°F Ambient)	235	666	671	407	713
Off-Normal - Severe Cold (-40°F Ambient)	32	557	562	271	604
Accident - Extreme Heat (133°F Ambient)	274	687	692	433	734
Accident - Fire	244	685	689	420	731
Allowable	350	750	800	800	1058
	Maximum Temperatures (°F)				
Transfer - Vacuum Drying and Backfilled with Helium	N/A	697	701	478	744
Allowable	N/A	750	800	800	752

4.A.2 Summary of Thermal Properties of Materials

The material thermal properties used in the thermal analyses of the UNITAD Storage System are the same as those shown in FSAR Tables 4.2-1 through 4.2-12 for the NAC-UMS® Storage System with the exception of borated stainless steel. The thermal properties for this material are contained in Table 4.A.4.1.2-3. Only the materials that form the heat transfer pathways employed in the thermal analysis models are included in the tables. Materials for small components, which are not directly modeled, are not included in the property tabulation. Derivation of effective conductivities is described in the Sections 4.A.4.1.3 through 4.A.4.1.5.

THIS PAGE INTENTIONALLY LEFT BLANK

4.A.3 Specifications for Components

Five major components of the UNITAD Storage System must be maintained within their safe operating temperature ranges: the concrete in the Vertical Concrete Cask; the lead gamma shield and the NS-4-FR solid neutron shield in the Transfer Cask; and the aluminum heat transfer disks and the stainless steel support disks in the basket structure inside the Canister. The safe operating spans for these components range from a minimum temperature of -40°F to the maximum temperatures as shown in NAC-UMS® Storage System FSAR, Table 4.1-3.

The discussion of specifications for components presented in the NAC-UMS® Storage System FSAR, Section 4.3, is applicable to the UNITAD Storage System.

THIS PAGE INTENTIONALLY LEFT BLANK

4.A.4 Thermal Evaluation of the UNITAD Storage System for Normal Conditions of Storage

The finite element method and the finite volume method are used to evaluate the thermal performance of the UNITAD Storage System for normal conditions of storage. The finite element analysis program, ANSYS-Revision 10, and finite volume analysis program, FLUENT-Revision 6.3.26 [2], are used to perform the thermal evaluations.

4.A.4.1 Thermal Models

The following finite element and finite volume models are utilized for the thermal evaluation of the UNITAD Storage System:

1. Two-Dimensional Axisymmetric Concrete Cask and Canister Models
2. Three-Dimensional Transfer Cask and Canister Models
3. Three-Dimensional Periodic Canister Internal Models
4. Two-Dimensional Fuel Models
5. Two-Dimensional Fuel Tube Models

The overall functionality of the individual components of the passive cooling system described in FSAR Section 4.1 for the NAC-UMS® Storage System also applies to the UNITAD Storage System. The difference between the two systems is primarily in the dimensions of the components. The design similarities ensure that the thermal performance will also be similar. Therefore, using the same modeling procedure for UNITAD as for UMS® is acceptable. Both systems employ a Computational Fluid Dynamics (CFD) method for the annular flow region. Both designs are similar, ensuring that the flow regime up through the annular region would be the same for both systems. Licensing precedence has resulted in a change in the modeling technique for the annular flow between the Canister and the Vertical Concrete Cask (Concrete Cask). While both systems can employ an axisymmetric model for the air flow in the annular region between the Canister and the Concrete Cask, the UMS® relied upon a fully turbulent model referred to as the k-ε turbulence model. Recent tests and benchmarks (see Section 4.A.4.8) suggest that a transitional k-ω turbulence model is to be used. In the UNITAD evaluation, a k-ω turbulence model is used in conjunction with a CFD code based on finite volume formulation (FLUENT) as opposed to a finite element formulation (ANSYS-Flotran) as was used for the UMS® Storage System.

With respect to heat conduction and radiation, there is no difference in the two systems. Therefore, for the models listed in items 2 through 5, the same modeling methodology is employed for the UNITAD Storage System. These models are described in the UMS® Storage System FSAR, Section 4.4.1. For the annular flow evaluation, since the methodology was changed, the revised methodology is described in the following sections.

4.A.4.1.1 Two-Dimensional Axisymmetric Concrete Cask and Canister Models

This section describes the finite volume model used to evaluate the thermal performance of the Concrete Cask and the Canister for the PWR fuel configuration. As shown in Figures 4.A.4.1.1-1 and 4.A.4.1.1-2, the two-dimensional axisymmetric Concrete Cask and the Canister model includes the following:

- Concrete Cask, including lid, liner, pedestal and stand
- Air in the air inlets, the annulus and the air outlet
- Canister shell, lid and bottom plate
- Canister internals and fuel using effective thermal properties

The fuel basket, fuel and fuel tube are modeled as homogeneous regions with effective properties. The effective thermal conductivities for the Canister internals in the radial and axial directions are determined using the three-dimensional models as detailed in Section 4.A.4.1.3.

The two-dimensional axisymmetric Concrete Cask and Canister model is used to perform CFD analyses to determine the component temperature, the mass flow rate, velocity and temperature of the air flow in the annulus region. Since the Concrete Cask and its components are contained in the model, the temperature distributions in the concrete and the concrete cask steel liner are also determined. Figure 4.A.4.1.1-2 shows an overall view of the cells employed in the model representing both the Concrete Cask and the Canister containing a design basis fuel heat load.

Modeling of the Concrete Cask and Loaded Canister

The concrete cask body has four air inlets at the bottom and four air outlets at the top. Since the configuration and heat loads are symmetrical, they can be simplified into a two-dimensional axisymmetric model by using equivalent dimensions for the air inlets and outlets, which are assumed to extend around the Concrete Cask periphery. The vertical air gap is an annulus, with a radial width of 3.75 inches. This radial dimension of the air annulus between the Canister shell and the Concrete Cask liner is modified to a smaller effective value to account for the reduction of the air flow cross-sectional area due to the standoffs welded to the liner. The bottom ends of

the standoffs are more than 63 inches from the bottom of the Canister, which means that for over 30% of the length of the annulus, the standoffs do not exist. The model conservatively represents them as being the full length of the Canister. The additional axial conductance from the standoffs is conservatively neglected. Thermal radiation across the annulus gap is considered in the model. Heat being radiated to the concrete cask liner is transferred into the annulus by convection, as well as being conducted through the concrete cask wall.

The most significant mechanism for rejecting heat into the environment is through the movement of air up through the annulus. The air flow in the vertical annulus is modeled as transitional turbulent flow using the k-ω turbulence model in FLUENT [2]. This determination was made through the use of a thermal test of PWR canistered fuel contained in a Vertical Concrete Cask, which is described in EPRI Report TR-100305 [3] and provides a description of the test canister, the Concrete Cask, the fuel assemblies and the boundary conditions employed in a series of tests. The total heat load of the fuel used in the tests was 14.9 kW. Extensive temperature measurements were made for the basket, fuel, Canister and Concrete Cask for each test conducted. The thermal test of interest employed the vacuum condition for the Canister. This test was selected since it removed the influence of convection inside the Canister and simplified the thermal model inside the Canister. FLUENT was used to perform a two-dimensional steady-state axisymmetric analysis of the system described in Reference 3 using two turbulent flow models: a low Reynold's number turbulence model (low Re k-ε) and a transitional turbulence model (k-ω). Technical details for these turbulence models are contained in the documentation for FLUENT. The thermal models and boundary conditions used in the analyses are detailed in Section 4.A.4.8. Results for the temperature profiles for the canister surface and the concrete liner surfaces for both turbulence models are shown in Figure 4.A.4.8-3 and Figure 4.A.4.8-4. The results indicate that both turbulence models yield conservative predictions for the temperature profiles and that both the low Reynold's number k-ε and the k-ω models are appropriate for use in the analysis of air flow up through the annulus between the Canister and the Concrete Cask. Since the use of the k-ω model provides conservative results for the Canister shell and Concrete Cask for a test corresponding to 14.9 kW, the use of the k-ω model is also considered to be appropriate for analyses having larger heat loads. As the heat load is increased, the turbulence in the annulus air flow is also expected to increase. The results of the analysis for the thermal tests are considered as validation for the use of the k-ω turbulence model for the annulus region of the UNITAD Storage System.

The mesh corresponding to the annulus for the analysis is shown in Figure 4.A.4.1.1-2. Increased cell density is used in the annulus region adjacent to the wall to allow the y+ at the wall to be on the order of unity, ensuring proper turbulence modeling.

Thermal radiation is modeled in all air regions (i.e., between all surfaces separated by air), and in the annulus between the canister shell and the VCC liner. The discrete ordinates (DO) radiation model [2] is used for the heat transfer computations in the continuum regions. Emissivity values are applied on the solid surfaces.

The Canister model is included with the Concrete Cask model as shown in Figure 4.A.4.1.1-1. Boundary conditions at the edges of the model to the ambient are applied to the Concrete Cask surfaces. The heat being transferred from the basket internal to the Canister through the Canister shell and into the air annulus region is not considered to be a boundary condition for the Concrete Cask since all of these components are included in the same model.

The loaded Canister consists of the following parts in the CFD model:

- Canister shell, lid and bottom plate
- Canister contents, including support disk, heat transfer disk, fuel tube, the PWR fuel assembly, and helium inside the Canister

The canister lid, shell and bottom plate are modeled as stainless steel. The contents inside the Canister are modeled in four regions: basket below the active fuel; basket at the active fuel region; basket above the active fuel region; and a helium gap between the basket top and the canister lid. The material properties for the homogeneous regions are computed using the three-dimensional periodic canister internal model, as described in Section 4.A.4.1.3. The effective properties for the basket are listed in Table 4.A.4.1.1-1

Conduction is the only heat transfer mode considered inside the canister in the CFD model, except the helium gap between the basket and the canister lid. Radiation in the basket regions is considered in the effective property calculation as shown in Section 4.A.4.1.3. Both radiation and conduction are considered in the helium gap between the basket and the canister lid. No flow is considered in this helium gap.

The boundary conditions applied to the outer surface of the Concrete Cask include the following.

<u>Loads and Boundary Conditions</u>

1. Active fuel region
   The fuel heat load of 22 kW is applied to the active fuel region of the basket. The heat source varies in the axial direction as shown in Figure 4.A.4.1.1-3.

2. Vent inlets and outlets
   At the vent inlets and outlets, the ambient temperature is applied for conditions analyzed.

3. Bottom surfaces
   Ambient temperature is applied to the outer bottom surfaces of the VCC bottom plate. Adiabatic boundary condition is applied to the bottom surface of the VCC that is not above the base plate.

4. VCC side and top lid surfaces for normal cases
   Natural convection and thermal radiation between the VCC outer surfaces and the ambient, and solar insolance are applied, as described in the following paragraphs.

4a. Thermal radiation

Surface emissivity values of 0.1638 and 0.9 are used for concrete side and concrete lid top, respectively. The effective emissivity of 0.1638 for the side is concrete emissivity of 0.9 multiplied by a view factor of 0.182 due to the effect of surrounding casks.

Surface emissivity values of 0.1456 and 0.8 are used for side carbon steel plates and top carbon steel lid, respectively. The same view factor of 0.182 for the concrete side is used to determine the effective side emissivity of the carbon steel side surfaces.

4b. Natural convection heat transfer

The natural convection heat transfer coefficients for the VCC side and top surfaces are applied using the same heat transfer correlation for vertical and horizontal plates described in Section 4.4.1.1 of the NAC-UMS® Storage System FSAR.

4c. Solar insolance

The incident solar energy, which is specified as a heat flux (W/m^2), is applied to the VCC outer surfaces. The average values are obtained based on 24 hours as shown in the following equations (Section 4.4.1.1 of the UMS® FSAR).

Side surfaces: $qsun_{side} = (1475/24)\ (1/.3171)\ W/m^2 = 193.81\ W/m^2$

Top surfaces: $qsun_{top} = (2950/24)\ (1/.3171)\ W/m^2 = 387.63\ W/m^2$

The applied heat flux in the model is the product of above heat flux and surface absorptivity, which are 0.6 for concrete and 0.8 for carbon steel.

5. All solid surfaces bounding the air regions

   Emissivity values, 0.36 for stainless steel and 0.8 for carbon steel, are applied on solid surfaces facing air for radiation heat transfer modeling.

   Emissivity of 0.36 is also applied on the bottom of the canister lid and bottom of the helium gap (solid region with helium properties) below the lid to model radiation heat transfer between the top of the basket and bottom of the lid.

Figure 4.A.4.1.1-1 Solid Model for UNITAD Storage System (Canister and Concrete Cask)

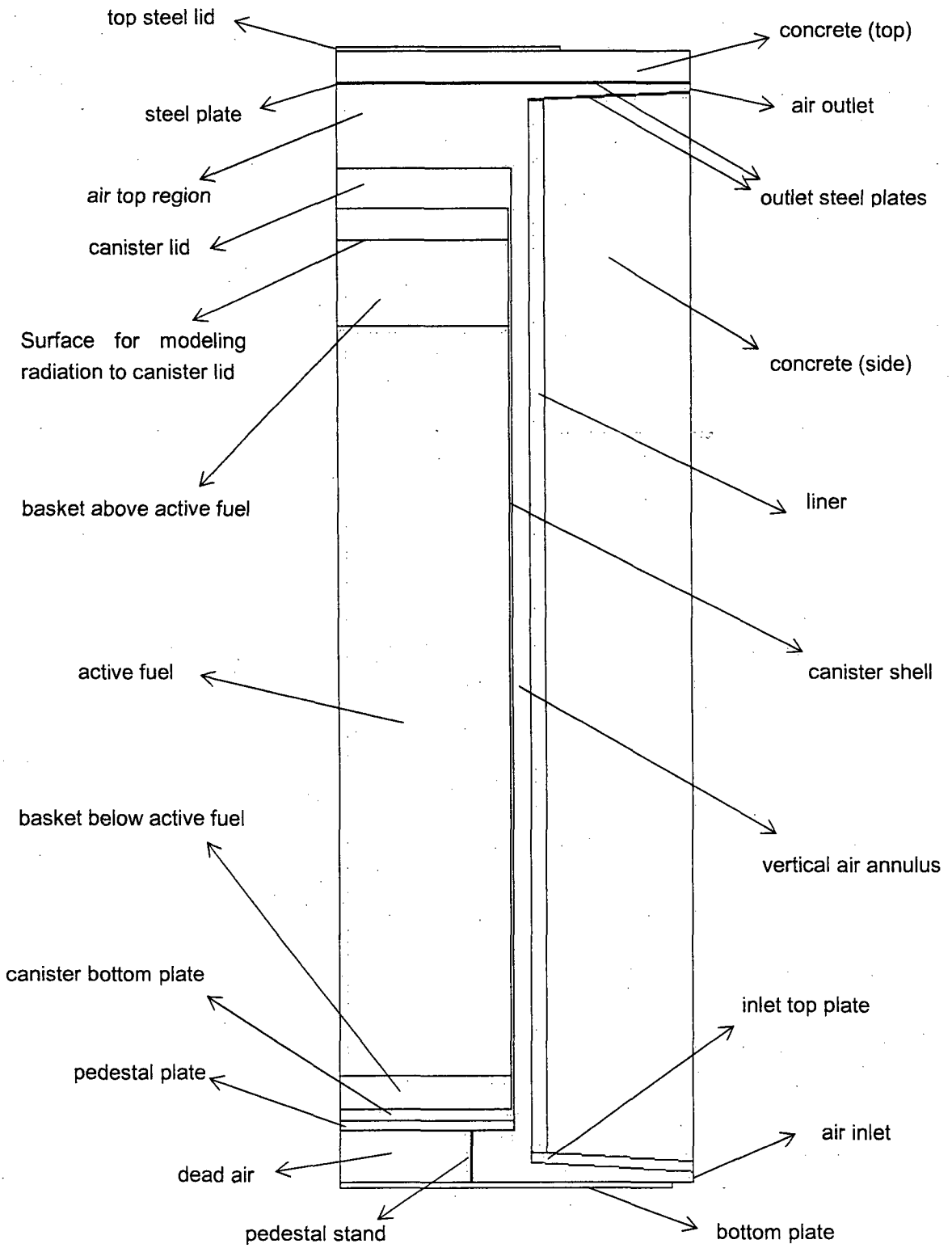

Figure 4.A.4.1.1-2 FLUENT Computational Fluid Dynamics Model for UNITAD Storage System (Canister and Concrete Cask)

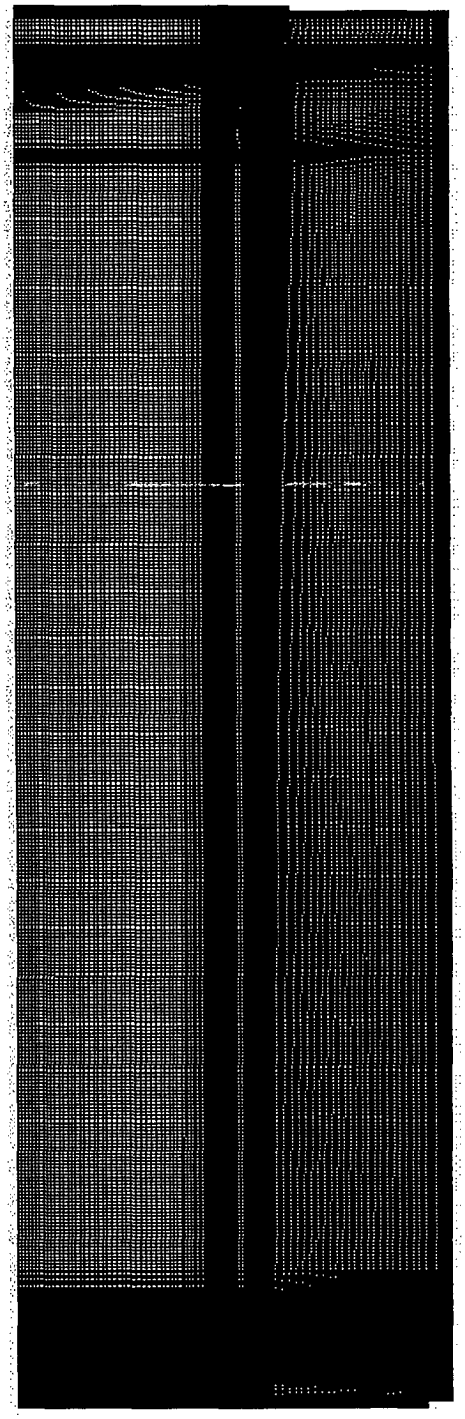

Figure 4.A.4.1.1-3 Fuel Power Distribution Curve

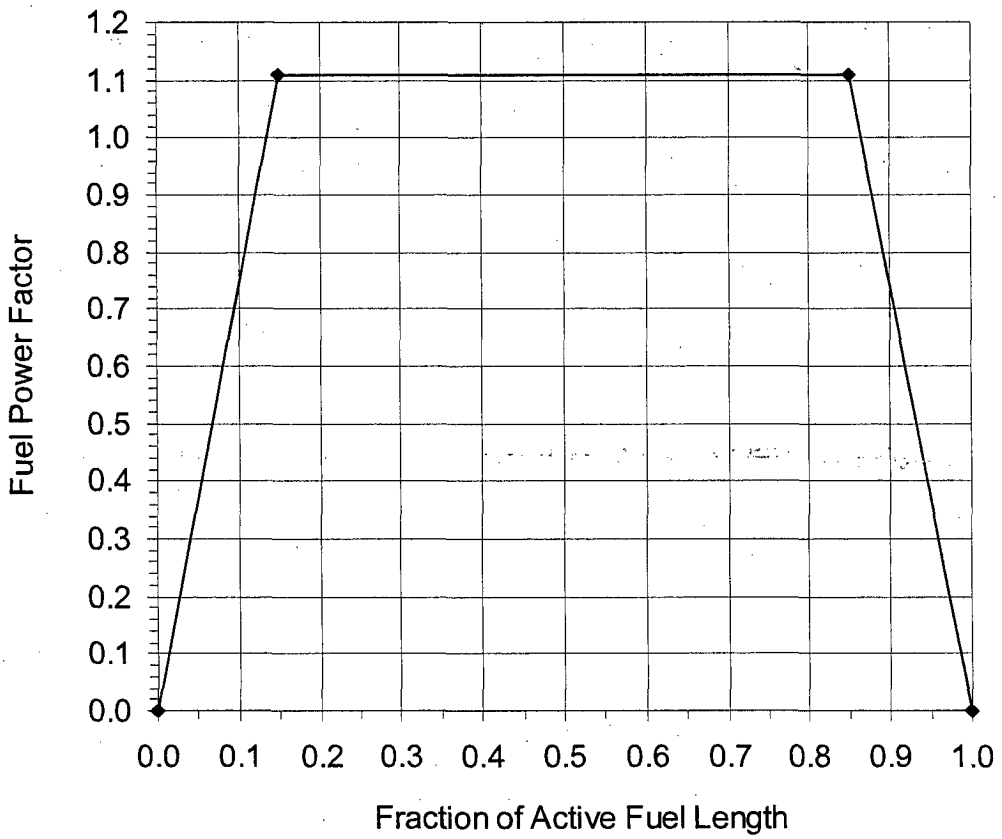

Table 4.A.4.1.1-1 Effective Thermal Properties for the Homogenized Basket

Temperature (°F)	100	300	600	800
K_{axial} (Btu/hr-in-°F)	0.1613	0.1624	0.1694	0.1757

Temperature (°F)	275	378	484	592	702	813
K_{radial} (Btu/hr-in-°F)	0.1177	0.1296	0.1411	0.1529	0.1648	0.1768
ρ (lb/in.3)	0.1214	0.1213	0.1213	0.1212	0.1212	0.1211
C (Btu/lb-°F)	0.0943	0.0966	0.0984	0.0999	0.1010	0.1020

4.A.4.1.2 Three-Dimensional Transfer Cask and Canister Models

The three-dimensional quarter-symmetry transfer cask model is a representation of the loaded PWR Canister and transfer cask assembly. The model is shown in Figures 4.A.4.1.2-1, 4.A.4.1.2-2 and 4.A.4.1.2-3.

ANSYS SOLID70 three-dimensional conduction elements and LINK31 radiation elements are used to construct the transfer cask and Canister model. The model includes the fuel assemblies, fuel tubes, support disks, heat transfer disks, top and bottom weldments, canister shell, canister lid, canister bottom plate, media inside the Canister (helium or water), and the transfer cask. Based on symmetry, only one-quarter of the transfer cask and Canister is modeled. The plane of symmetry is considered to be adiabatic.

In the model, the fuel assemblies are considered to be centered in the fuel tubes. The fuel tubes are centered in the slots of the support disks and heat transfer disks. The basket is centered in the Canister. The loaded Canister is centered in the transfer cask. These assumptions are conservative, since any contact between components will provide a more efficient path to reject the heat.

The gaps used in the three-dimensional Transfer Cask and Canister model between the support disks and Canister shell, as well as between the heat transfer disk and the Canister shell, are computed based on the nominal dimensions.

All material properties used in the model, except the effective properties discussed in the following paragraph, are shown in the UMS® FSAR, Tables 4.1-1 through 4.2-12.

The fuel assemblies and fuel tubes are modeled as homogenous regions with effective conductivities, determined by the two-dimensional fuel models (Section 4.A.4.1.4) and the two-dimensional fuel tube models (Section 4.A.4.1.5), respectively. The effective properties are listed in Tables 4.A.4.1.2-1 and 4.A.4.1.2-2. The properties corresponding to the PWR 14×14 assemblies are used for the PWR model, since the 14×14 assemblies have lower conductivities as compared to other PWR assemblies.

In the model, radiation heat transfer is taken into account in the following locations:

1. From the exterior surfaces of the fuel tubes (surface between disks) to the inner surface of the canister shell.

2. From the edge of the support disks to the inner surface of the canister shell.
3. From the edge of heat transfer disks to the inner surface of the canister shell.
4. Between disks in the PWR model in the canister axial direction.
5. From the canister shell to the inner surface of the inner shell of the transfer cask.
6. Within the two surfaces of the air gap between the lead and the inner shell of the transfer cask.

An emissivity of 0.22 is used for the heat transfer disk, except the water-jet cut surfaces (the circumferential surfaces at the edges of the disks facing the canister shell and the inner surfaces of each slot). The surface condition of the water-jet cut surfaces is similar to that of the sandblasted surface and, therefore, an emissivity of 0.4 is used.

Radiation elements (LINK31) are used to model the radiation effect for the first location. Radiation across the gaps (Locations No. 2 through 6) is accounted for by establishing effective conductivities for the gas in the gap, as shown in Section 4.4.1.3 of the NAC-UMS® Storage System FSAR.

Effective emissivities (ε) are used for all radiation calculations, based on the formula as in Section 4.4.1.3 of the UMS® FSAR. The view factor is taken to be unity.

Volumetric heat generation (Btu/hr-in^3) is applied to the active fuel region based on design heat load, active fuel length of 144 inches and an axial power distribution as shown in Figure 4.A.4.1.1-3.

The transfer cask is comprised of an inner and outer steel shell and an intermediate layer of NS-4-FR and lead. A 0.03-inch air gap between the lead and the cask inner shell is modeled. Boundary conditions consist only of the natural convection in conjunction with radiation from the surfaces of the transfer cask. Solar insolance is not applied. The model is used to perform transient and steady-state thermal analyses to determine the maximum water temperature in the Canister for the period beginning immediately after removing the transfer cask and Canister from the spent fuel pool. The model is also used to calculate the maximum temperatures of the fuel cladding, support disk, heat transfer disk, and the transfer cask and canister components during the vacuum drying condition and after the Canister is backfilled with helium. The methods to

determine the effective properties (Sections 4.A.4.1.4 and 4.A.4.1.5) are required for water and helium. In the vacuum drying condition, the operations limit the vacuum to be above 10 torr or 12 millibars. Per Reference 4 [4], the conduction properties for helium above 1 millibar can be used for conductivities at atmospheric conditions. Therefore, the effective properties for the fuel and gaps for the vacuum evaluation can employ the effective properties based on helium. The steady-state valuations will be used to define the time limits in the vacuum and helium conditions.

Figure 4.A.4.1.2-1 Quarter-Symmetry Three-Dimensional Transfer Cask and Canister Model

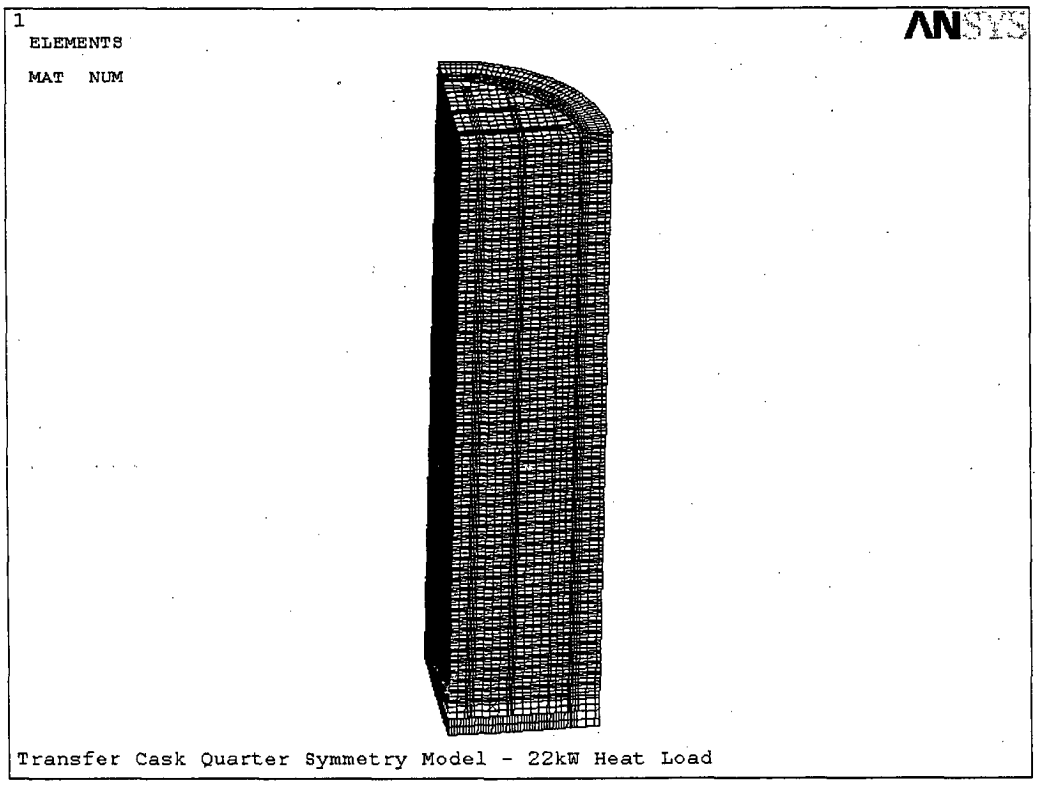

Figure 4.A.4.1.2-2 Model of the Transfer Cask

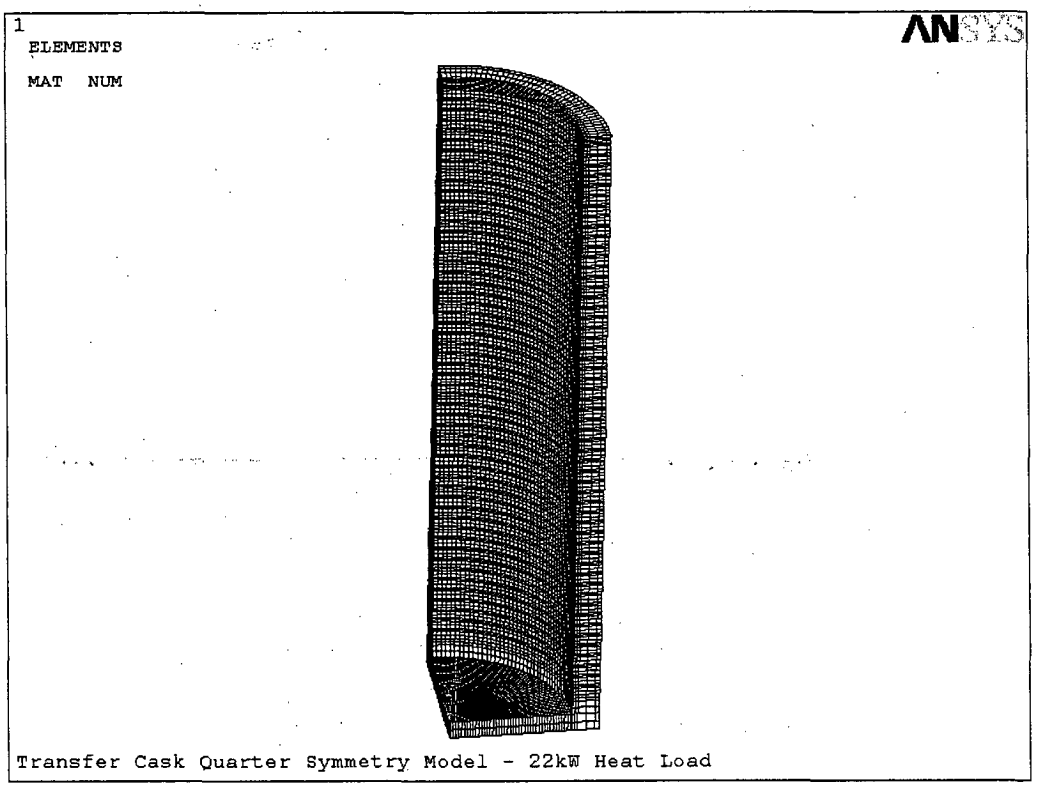

Figure 4.A.4.1.2-3 Modeling Details of the Quarter-Symmetry Transfer Cask Model

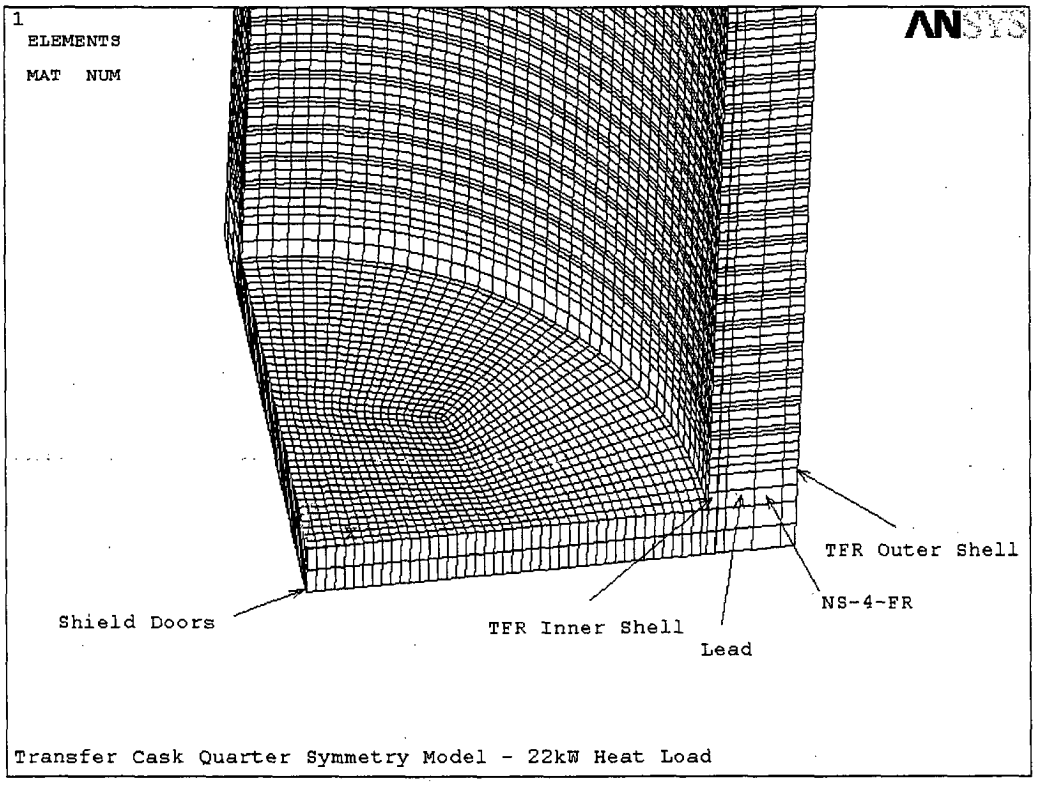

Table 4.A.4.1.2-1 Effective Thermal Conductivities for PWR Fuel Assemblies

Conductivity (Btu/hr-in-°F)	**Temperature (°F)**			
	215	**409**	**607**	**808**
Kxx	0.020	0.029	0.041	0.057
Kyy	0.020	0.029	0.041	0.057
Kzz	0.159	0.143	0.133	0.130

Note: Kxx and Kyy are the conductivity in plane. Kzz is the conductivity in fuel axial direction.

Table 4.A.4.1.2-2 Effective Thermal Conductivities for PWR Fuel Tubes

Fuel Assembly Group	Conductivity (Btu/hr-in-°F)	Temperature (°F)			
		207	406	605	804
In SS disk region					
	Kxx	0.048	0.058	0.069	0.082
	Kyy	0.63	0.69	0.75	0.80
	Kzz	0.63	0.69	0.75	0.80
In AL disk region					
	Kxx	0.042	0.052	0.062	0.073
	Kyy	0.63	0.69	0.75	0.80
	Kzz	0.63	0.69	0.75	0.80

Note: Kxx is in the direction across the thickness of the fuel tube wall.
Kyy is in the direction parallel to the fuel tube wall.
Kzz is in the canister axial direction.

Table 4.A.4.1.2-3 Borated Stainless Steel Thermal Properties

Borated Stainless Steel			
Temperature (° F)	73	325	752
Conductivity (Btu/hr-in-° F)	0.693	0.795	0.939
Specific Heat (Btu/lb_m-°F)	0.120	0.124	0.136
Density (lb_m/in^3)	0.280		

From Reference [5].

4.A.4.1.3 Three-Dimensional Periodic Canister Internal Models

The three-dimensional periodic Canister internal model consists of a periodic section of the Canister internals. For the PWR Canister, the model contains one support disk with two heat transfer disks (half thickness) on its top and bottom, the fuel assemblies, the fuel tubes and the media in the Canister, as shown in Figure 4.A.4.1.3-1. The purpose of the model is to determine the effective thermal properties of the Canister internals in the Canister radial and axial directions. The effective conductivities are used in the two-dimensional axisymmetric air flow and concrete cask models. The media in the Canister is considered to be helium. The fuel assemblies and fuel tubes in this model are represented by homogeneous regions with effective thermal properties. The effective conductivities for the fuel assemblies and the fuel tubes are determined by the two-dimensional fuel models (Section 4.A.4.1.4) and the two-dimensional fuel tube models (Section 4.A.4.1.5), respectively. The properties corresponding to the PWR 14×14 assemblies are used for the PWR model, since the 14×14 assemblies have the lowest conductivities as compared to other PWR assemblies.

The effective thermal conductivity (k_{eff}) in the radial direction is determined by considering the canister internals as a solid cylinder with heat generation using the same methodology as described in Section 4.4.1.4 of the NAC-UMS® Storage System FSAR.

Effective conductivity in the basket axial direction is calculated by an area-weighted average of the cross-sectional area for the conductivity. Effective density is calculated based on the weighted volume average, and effective specific heat is calculated based on the weighted mass average.

Figure 4.A.4.1.3-1 Three-Dimensional Periodic Canister Internal Model

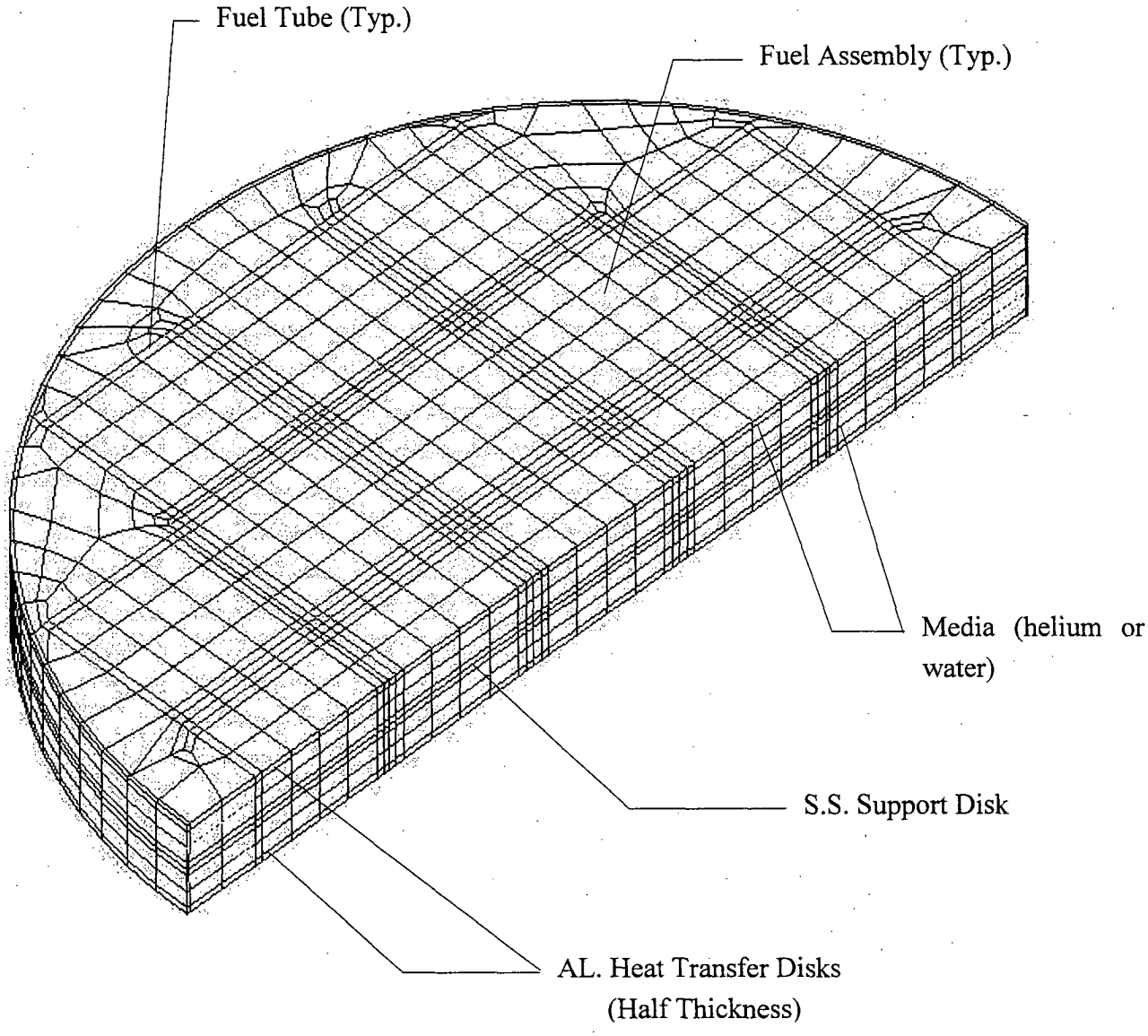

4.A.4.1.4 Two-Dimensional Fuel Models

The effective thermal properties of the fuel are determined by the two-dimensional finite element model of the fuel assembly. The effective conductivity is used in the three-dimensional Transfer Cask and Canister models (Section 4.A.4.1.2) and the three-dimensional periodic Canister internal models (Section 4.A.4.1.3). A total of four models is required: models for the 14×14, 15×15, 16×16 and 17×17 PWR fuels. Because of similarity, only the figure for the PWR 17×17 model is shown in this section (Figure 4.A.4.1.4-1 and 4.A.4.1.4-2). All models contain a full cross-section of an assembly to accommodate the radiation matrix.

The model includes the fuel pellets, cladding, media between fuel rods, media between the fuel rods and the inner surface of the fuel tube (PWR), and helium at the gap between the fuel pellets and cladding. Two types of media are considered: helium and water. As discussed in Section 4.A.4.1.2, the vacuum condition can be represented with the helium properties. Modes of heat transfer modeled include conduction and radiation between individual fuel rods for the steady-state condition. ANSYS PLANE55 conduction elements and MATRIX50 radiation elements are used to model conduction and radiation. The radiation matrix is used for the pin-to-pin radiation, as well as the pin-to-wall radiation. Radiation at the gap between the pellets and the cladding is conservatively ignored.

The effective conductivity for the fuel is determined by using the same methodology as described in Section 4.4.1.5 of the NAC-UMS® Storage System FSAR.

Effective conductivity in the parallel direction is calculated by an area-weighted average of the cross-sectional area for the conductivity. Note that the parallel direction is the longitudinal direction of the fuel assembly. Effective density is calculated based on the weighted volume average, and effective specific heat is calculated based on the weighted mass average.

Figure 4.A.4.1.4-1 Two-Dimensional PWR (17×17) Fuel Model

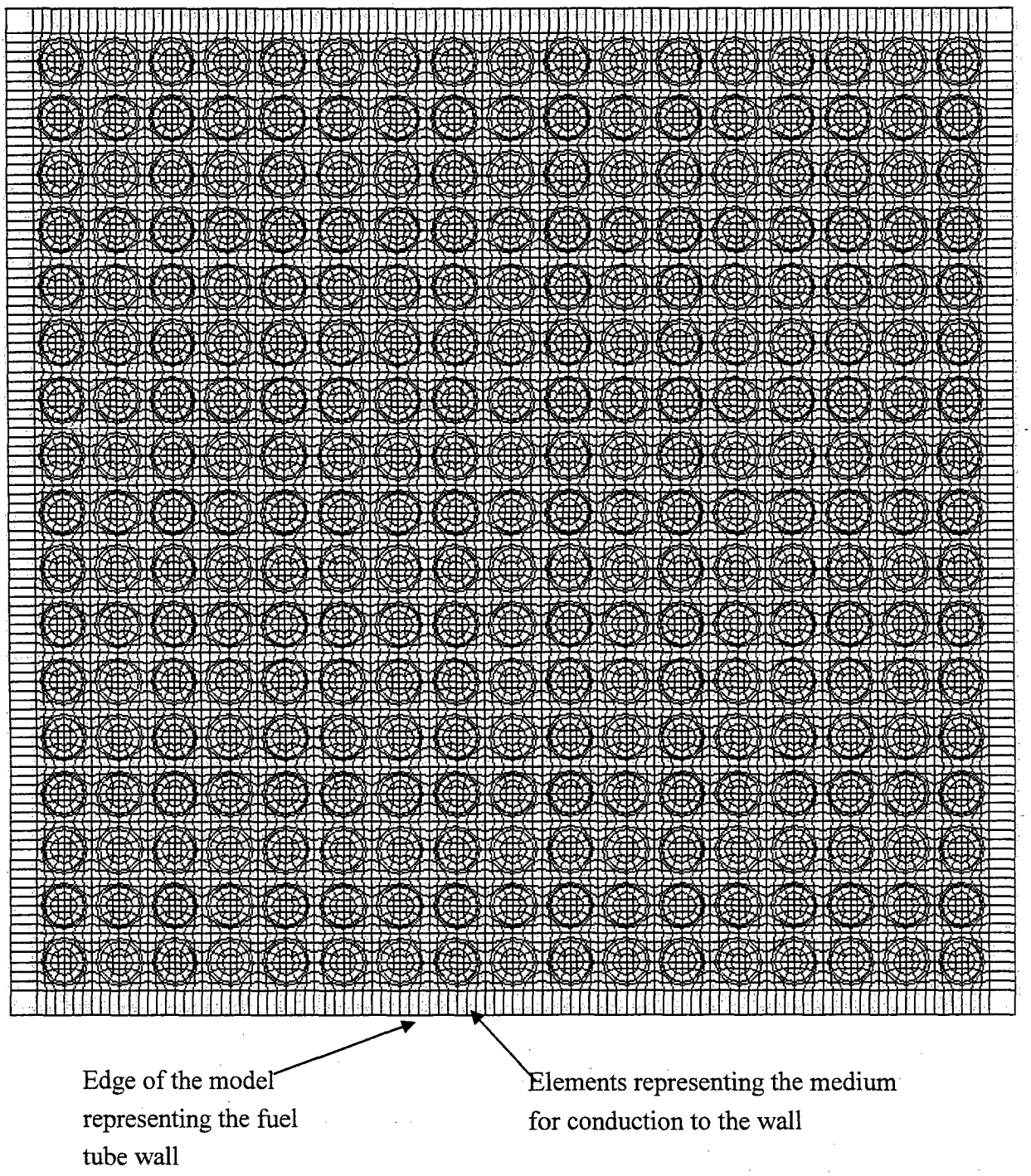

Figure 4.A.4.1.4-2 Pin and Pellet Fuel Model

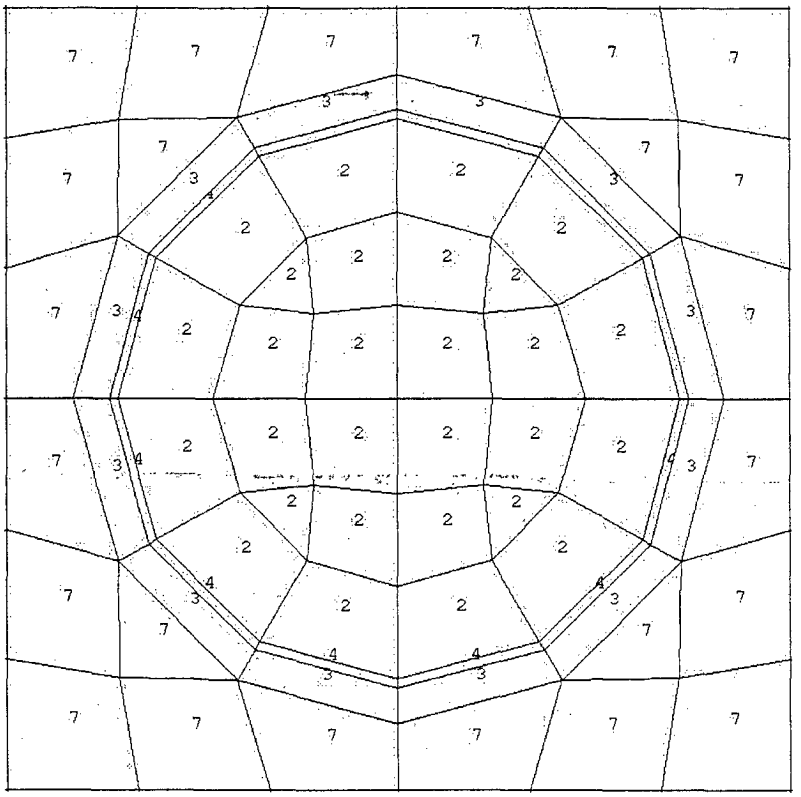

Material No.

2	Fuel Pellet (UO_2)
4	Gap between Cladding and Pellet (helium)
3	Fuel Cladding
7	Media (helium or water)

4.A.4.1.5 Two-Dimensional Fuel Tube Models

The two-dimensional fuel tube model is used to calculate the effective conductivities of the borated fuel tube plate and the gap from the plate to the inner surface of the disk slots. These effective conductivities are used in the three-dimensional Transfer Cask and Canister models (Section 4.A.4.1.2) and the three-dimensional periodic Canister internal models (Section 4.A.4.1.3).

As shown in Figure 4.A.4.1.5-1, the PWR fuel tube model includes the fuel tube and the gap between the borated stainless steel plate and the support disk or heat transfer disk. Two types of media are considered in the gaps: helium and water. As discussed in Section 4.A.4.1.2, the vacuum condition can be represented by the helium condition.

ANSYS PLANE55 conduction elements and LINK31 radiation elements are used to construct the model. The model consists of one layer of conduction elements and two radiation elements (radiation elements are not used for water condition) that are defined at the gaps (two for each gap). The thickness of the model (x-direction) is the distance measured from the outside face of the fuel assembly to the inside face of the slot in the support disk (assuming the fuel tube is centered in the hole in the disk). The height of the model is defined as equal to the width of the model.

Heat flux is applied at the left side of the model, and the temperature at the right boundary of the model is constrained. The heat flux is determined based on the design heat load. The maximum temperature of the model (at the left boundary) and the temperature difference (ΔT) across the model are calculated by the ANSYS model. The effective conductivity (K_{xx}) is determined using the same formula as shown in Section 4.4.1.6 of the NAC-UMS® Storage System FSAR.

Effective conductivity in the basket axial direction is calculated by an area-weighted average of the cross-sectional area for the conductivity. Effective density is calculated based on the weighted volume average, and effective specific heat is calculated based on the weighted mass average.

Figure 4.A.4.1.5-1 Two-Dimensional Fuel Tube Model: PWR Fuel

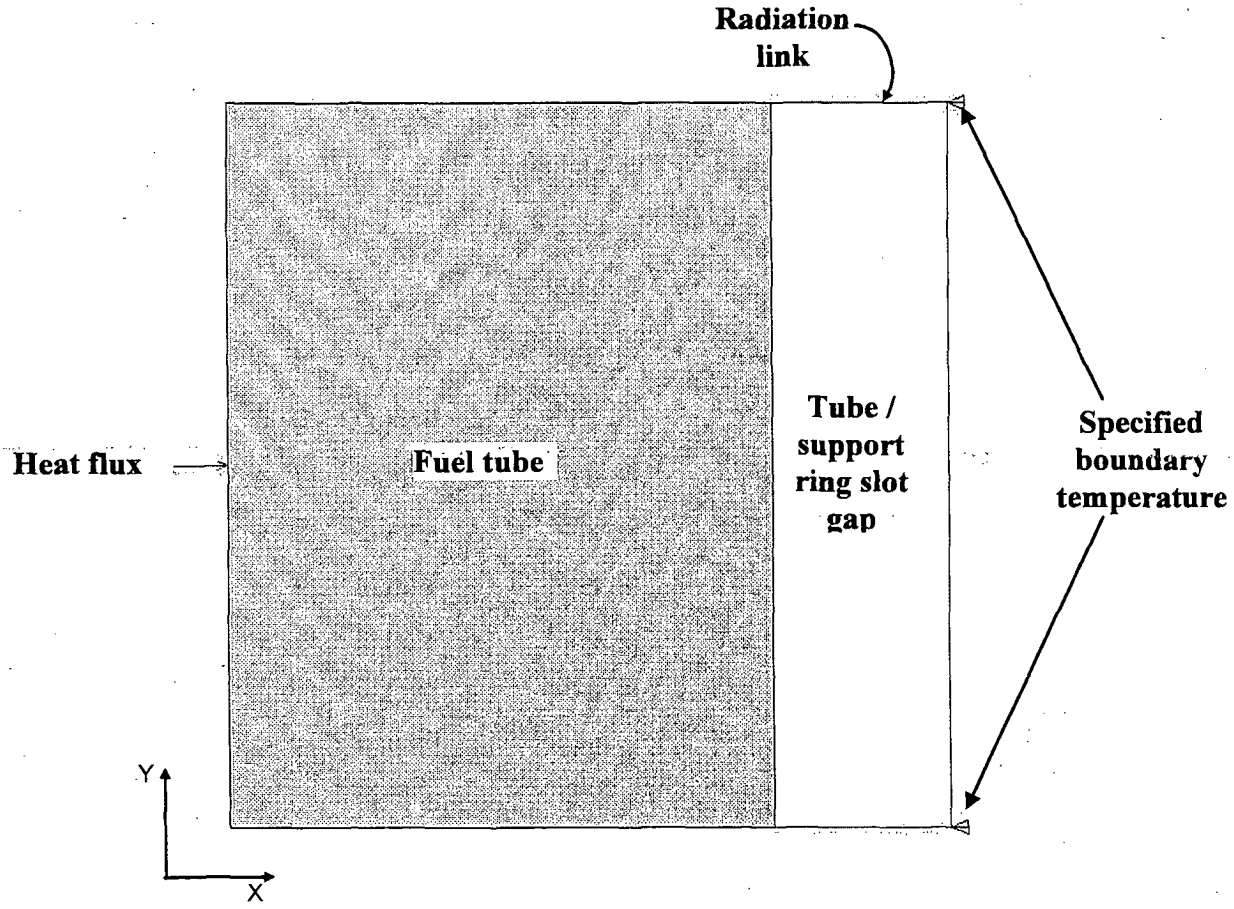

4.A.4.2 Test Model

Similarly to the NAC-UMS® Storage System, the UNITAD Storage System is conservatively designed by analysis. Therefore, no physical model is employed for thermal analysis.

4.A.4.3 Maximum Temperatures for PWR Fuel

Using the two-dimensional axisymmetric Concrete Cask and Canister models described in Section 4.A.4.1.1, the maximum clad temperature was determined to be 691°F. The maximum component temperatures are summarized in Table 4.A.4.3-1.

The three-dimensional transfer cask model described in Section 4.A.4.1.2 will be used to define the time limits for the system in the water condition, the vacuum condition and in the helium condition to result in the maximum component temperatures being less than the allowable component temperatures shown in Table 4.A.4.3-2.

Temperature peaks for the evaluated off-normal and accident conditions are presented in Sections 11.A.1 and 11.A.2, respectively.

Table 4.A.4.3-1. Maximum Component Temperatures for the Normal Storage Condition

Component	Maximum Temperature (°F)	Allowable Temperatures (°F)
Fuel Cladding	691	752
Heat Transfer Disk	644	650
Support Disk	649	800
Top Weldment	285	800
Bottom Weldment	192	800
Canister Shell	380	800
Canister Lid	178	800
Concrete	195 (local) 137 (bulk)	200 (local) 150 (bulk)

Table 4.A.4.3-2 Maximum Component Temperatures for the Transfer Condition (22kW)

Canister Media	Time (Hr)	Component	Max. Temperature (°F)	Allowable Temperature (°F)
Water	24	Fuel Cladding	192	752
Helium	Unlimited	Fuel Cladding	744	752
		Heat Transfer Disk	697	750
		Support Disk	701	800
		Canister Shell	478	800
		Cask Inner Shell	322	800
		Lead Shielding	293	620
		NS-4-FR	290	300
		Cask Outer Shell	190	800

4.A.4.4 Minimum Temperatures

The minimum temperatures of the Vertical Concrete Cask and components occur at -40°F with no heat load. The temperature distribution for this off-normal environmental condition is provided in Section 11.A.1. At this extreme condition, the component temperatures are above their minimum material limits.

4.A.4.5 Maximum Internal Pressures

The maximum internal operating pressures for normal conditions of storage are calculated in this section for the UNITAD Storage System PWR Canister.

Maximum Internal Pressure for PWR Fuel Canister

The internal pressures within the PWR fuel Canister are a function of fuel type, fuel condition (failure fraction), burnup, canister length (type), and the backfill gases in the Canister cavity. Gases included in the Canister pressure evaluation include rod fill, rod fission and rod backfill gases, Canister backfill gases and burnable poison generated gases. Each of the fuel types expected to be loaded into the UNITAD Storage System is separately evaluated to arrive at a bounding canister pressure.

Fission gases include all fuel material generated gases, including long-term actinide decay generated helium. Based on detailed SAS2H calculations of the maximum fissile material mass assemblies in each Canister class, the quantity of gas generated by the fuel rods rises as burnup and cool time are increased and enrichment is decreased. To assure the maximum gas is available for release, the PWR inventories are extracted from 60,000 MWd/MTU burnup cases at an enrichment of 1.9 wt. % ^{235}U and a cool time of 40 years. Gases included are all krypton, iodine, and xenon isotopes in addition to helium and tritium (^{3}H). Molar quantities for each of the maximum fissile mass assemblies are summarized in Table 4.A.4.5-1. Fuel generated gases are scaled by fissile mass to arrive at molar contents of other fuel types.

Fuel rod backfill pressure varies significantly between the PWR fuel types. The maximum reported backfill pressure is listed for the Westinghouse 17×17 fuel assembly at 500 psig. With the exception of the B&W fuel assemblies, which are limited to 435 psig, all fuel assemblies evaluated are set to the maximum 500 psig backfill reported for the Westinghouse assembly. Backfill quantities are based on the free volume between the pellet and the clad and the plenum volume. The fuel rod backfill gas temperature is conservatively assumed to have an initial temperature of 68°F.

Burnable poison rod assemblies (BPRAs) placed within the UNITAD Canister may contribute additional molar gas quantities due to (n, alpha) reactions of fission generated neutrons with ^{10}B during in-core operation. ^{10}B forms the basis of a portion of the neutron poison population. Other neutron poisons, such as gadolinium and erbium, do not produce a significant amount of

helium nuclides (alpha particles) as part of their activation chain. Primary BPRAs in existence include Westinghouse Pyrex (borosilicate glass) and WABA (wet annular burnable absorber) configurations, as well as B&W BPRAs and shim rods employed in CE cores. The CE shim rods replace standard fuel rods to form a complete assembly array. The quantity of helium available for release from the BPRAs is directly related to the initial boron content of the rods and the release fraction of gas from the matrix material in question. Release from either of the low-temperature, solid matrix materials is likely to be limited, but no release fractions were available in open literature. As such, a 100% release fraction is assumed based on a boron content of 0.0063 g/cm ^{10}B per rod, with the maximum number of rods per assembly. The maximum number of rods is 16 for Westinghouse core 14×14 assemblies, 20 rods for Westinghouse and B&W 15×15 assemblies, and 24 rods for Westinghouse and B&W 17×17 assemblies. The length of the absorber is conservatively taken as the active fuel length. CE core shim rods are modeled at 0.0126 g/cm ^{10}B for 16, 12, and 12 rods applied to CE-manufactured 14×14, 15×15 and 16×16 cores, respectively.

The Canister backfill gases are conservatively assumed to be at 68°F. The initial pressure of the Canister backfill gas is 1 atm (0.0 psig). Free volume inside each PWR Canister type (length) is listed in Table 4.A.4.5-2. The listed free volumes do not include fuel assembly components since these components vary for each assembly type and fuel insert. Subtracting out the rod and guide tube volumes and all hardware components arrives at free volume of the canisters, including fuel assemblies and a load of 21 BPRAs. For the Westinghouse BPRAs, the Pyrex volume is employed since it displaces more volume than the WABA rods.

The total pressure for each of the UNITAD Storage System payloads is found by calculating the releasable molar quantity of each gas (30% of the fission gas and 100% of the rod backfill adjusted for the 1% fuel failure fraction), and summing the quantities directly. The quantity of gas is then employed in the ideal gas equation, in conjunction with the average gas temperature at normal operating conditions, to arrive at system pressures. The normal system pressure calculation for maximum system pressure limits assumes the average PWR gas temperature to be 430°F. The actual calculated gas temperature determined by the three-dimensional canister model is 420°F for the normal storage condition. Each of the PWR fuel types is individually evaluated for normal condition pressure and sets the maximum normal condition pressure at 10.9 psig.

Table 4.A.4.5-1 PWR Per Assembly Fuel Generated Gas Inventory

Array	Assy Type	MTU	Moles
14×14	WE Standard	0.4144	42.98
15×15	B&W	0.4807	50.00
16×16	CE (System 80)	0.4417	46.11
17×17	WE Standard	0.4671	48.62

Table 4.A.4.5-2 PWR Canister Free Volume (No Fuel or Inserts)

Canister Class	1	2
Basket Volume (in^3)	69,390	74,080
Canister Height (inch)	183	193
Canister Free Volume w/o Fuel (liter)	8,857	9,332
Cask/Canister Free Volume w/o Fuel (liter)	10,337	10,298

4.A.4.6 Maximum Thermal Stresses

The results of thermal stress calculations for normal conditions of storage for the UNITAD Storage System are reported in Section 3.A.5.

4.A.4.7 Evaluation of System Performance for Normal Conditions of Storage

Results of thermal analysis of the UNITAD Storage System containing PWR fuel under normal conditions of storage are summarized in Table 4.A.1-1. The maximum PWR fuel rod cladding temperatures are below the allowable temperatures. The temperatures of safety-related components during storage and transfer operations under normal conditions are maintained within their safe operating ranges, and thermally induced stresses in combination with pressure and mechanical load stresses are shown in the structural analysis of Appendix 3.A to be less than the allowable stresses.

Therefore, the UNITAD Storage System performance meets the performance requirements of the Department of Energy Transportation, Aging and Disposal Canister System Performance Specification (DOE/RW-0585, Rev. 1) and of 10 CFR 72 for the safe storage of design basis fuel under normal operating conditions.

4.A.4.8 Benchmark Evaluation of the Two-Dimensional Axisymmetric Methodology for Annular Cooling in the Concrete Cask for UNITAD

In this section, a benchmark evaluation is performed to evaluate the adequacy of the k-ω and the low Reynold's (low Re) k-ε turbulent flow models that can be used in the evaluation of the flow in the annulus between the Canister and the Concrete Cask. A thermal evaluation using two-dimensional modeling methodology is performed for a system for which a thermal test has been conducted. The thermal test is described in EPRI TR-100305 [3]. The results of the thermal evaluation using the two-dimensional methodology performed in this section show that both turbulent flow models provide conservative temperatures for the canister surface and the concrete cask liner. This thermal benchmark evaluation confirms that the use of the k-ω turbulence model, in conjunction with the two-dimensional methodology, is conservative and, therefore, acceptable for use in the thermal evaluation of the UNITAD Storage System.

Introduction

The thermal design of the UNITAD Storage System rejects heat from the Canister surface to the ambient environment via convection and radiation. Ambient air enters the base of the Concrete Cask, removes heat via convection from the Canister surface, as well as from the surface of the concrete liner, and exits the top of the Concrete Cask through radial outlets. Radiation of heat from the Canister surface to the VCC liner also occurs, which allows the heat to then be convected into the annulus region or conducted through the thickness of the Concrete Cask. The annulus region is axisymmetric, with the exception of the air inlet and the air outlet, thus lending itself to representation by a two-dimensional axisymmetric model. While the air inlet and air outlet are rectangular in shape, the cross-sectional area of the air inlet and air outlet in an axisymmetric model can vary radially to account for the constant cross-sectional area in the actual test article. A single height for the inlets and outlets can be used, provided the modeled height does not represent more cross-sectional area than the actual inlet and outlet. An important consideration for the analysis of the annulus air flow is the identification of the turbulent flow models. Two models are available: k-ω and low Re k-ε turbulent flow models, which are described in the FLUENT documentation [2]. Selection of the turbulent flow model for the UNITAD Storage System is based on the thermal test data provided in EPRI TR-100305 [3].

Purpose

The purpose of this section is to provide a thermal benchmark, which will demonstrate that the k-ε turbulent flow model used in the UNITAD Storage System thermal evaluation is conservative.

Description of the Thermal Test

In EPRI TR-100305 [3], thermal testing was performed for a Vertical Concrete Cask loaded with a Canister containing 17 PWR fuel assemblies with a total heat load of 14.9 kW. The basket contained in the cask during testing was comprised of 17 square slots in which the basket walls were constructed of carbon steel. A series of thermal tests was performed that corresponded to different Canister conditions, as well as different air inlet and air outlet conditions. To minimize the uncertainty introduced by other thermal behavior, either inside the Canister or outside the Canister, the test using the vacuum condition with fully opened vents was employed. This test was conducted inside a large structure, which removed the uncertainty of solar insolance affecting the surface temperatures. Additionally, the method and location in which the inlet temperatures were measured were also documented. Axial profiles of the temperatures for the Canister surface, as well as the concrete liner surface, were provided in the results published for the thermal test. The temperature profile provides the basis for the comparison of the performance of the different turbulent flow models.

FLUENT Model Description

The FLUENT two-dimensional axisymmetric model of the VSC-17 is comprised of the Canister and the Concrete Cask. The definition of the regions and the cells comprising the model is shown in Figure 4.A.4.8-1. Since the vacuum condition is being modeled in the Canister, the only region to support fluid flow is the air annulus region between the Canister and the concrete liner. The edge of the model corresponds to the outer surface of the Concrete Cask. The model contains the same changes in direction in the air inlet and the air outlet as exist in the Concrete Cask used in the thermal test. The heights of the air inlet and air outlet for each segment are selected to allow the physical cross-sectional area to bound the area contained in the FLUENT model.

There are two parameters of interest that influence the heat rejection into the annulus region. Since the heat is being radiated from the Canister to the inner liner of the Concrete Cask, the emissivity of the two facing surfaces (the outer surface of the Canister and the inner surface of

the liner of the concrete cask) can directly influence the heat transfer. In this evaluation, an emissivity value of 0.7 was used for the carbon steel surfaces. More important is the selection of one of the turbulent flow models for the air flow up through the annulus region: a transitional turbulent flow model (k-ω model) or a low Re turbulent flow model (low Re k-ε model). In FLUENT, either turbulent flow model can be selected. Unlike the specification of emissivity as a property of the surface, the use of a particular turbulence model defines certain requirements for the cells adjacent to the wall. The radial size of the cell divisions near the wall is typically compared to a dimensionless quantity defined as y+ [2]. Guidelines contained in Reference 2 recommend using a y+ of near unity for the transitional model (k-ω) and for the low Re k-ε model. This implies that the near wall cell divisions for the models are significantly refined near the wall.

Effective Properties for the Basket and Fuel Region

For the regions corresponding to the basket, effective properties are employed in the analysis. The effective thermal properties for the basket region are computed using an ANSYS model shown in Figure 4.A.4.8-2. In Reference 3, the description of the basket indicates that a cylindrical shell (connected to the outer basket tubes) forms part of the surface facing the inner surface of the canister. Outside of the axial locations that do not have the cylindrical shell, the outer surface of the outer basket slots faces the inner surface of the canister shell directly. The model shown in Figure 4.A.4.8-2 models the cylindrical shell for the full length of the basket. The cylinder shell, where it does exist in the Canister used in the thermal test, provides an additional radiation shield that reduces the effectiveness of the radiation heat transfer from the outer basket tubes to the canister shell. This would result in higher basket temperatures in the analyses. In the FLUENT model in Figure 4.A.4.8-1, there is a gap between the outer radius of the cylindrical shell and the inner surface of the Canister. Between these two surfaces, radiation is simulated using conduction properties that have a cubic temperature dependency.

The basket cross-section model contains the carbon steel basket and the fuel regions, which are modeled with homogeneous orthotropic thermal conductivities. To determine the temperature-dependent effective thermal conductivity of the basket region, a series of temperatures is applied to the boundary of the model (as shown in Figure 4.A.4.8-2). Solutions for each boundary condition determine the maximum temperature of the basket and the associated change in temperature from the boundary to the maximum temperature location. The effective thermal conductivities are determined using the same expression employed for the NAC-UMS® Storage System in Section 4.4.1.4 of the FSAR.

Boundary Conditions

The outer edges of the model correspond to the outer surface of the Concrete Cask. Two cases are presented in this section to assess the performance of each turbulent flow model. The boundary conditions employed for each model were identical, with the exception of the selection of the turbulent flow model.

Temperature Specification

The edge of the model includes not only the air inlet and the air outlet, but also the remainder of the Concrete Cask surface. For the air inlets, the average temperature of the test recorded ambients for the vacuum test for the fully opened inlets was applied as the temperature for the air inlet in the model. For the remainder of the Concrete Cask surface, a temperature of 26°C was used for computation of the heat transfer by natural convection from the side and top of the Concrete Cask. A film coefficient was also specified for the bottom surface of the model to maximize the heat transfer to the base, thereby reducing the heat flux to the canister surface.

Heat Generation

The total heat load applied to the active fuel region of the model was 14.9 kW, and a user specified function reflected the power profile curve for the fuel in EPRI TR-100305 [3]. The power distribution has a peaking factor of 1.2. The heat generation was assumed to be uniformly distributed over the radial direction from the basket centerline to the outer radius of the porous media region.

Buoyancy

Since the annulus gas was specified as an ideal gas, the only condition required to enact buoyancy as a driving force for the air is to set the gravity acceleration as –9.8 m/sec^2.

An additional parameter that must be specified is the "operating" density at the air inlet. Since the annulus gas is being treated as an ideal gas, the "operating" density was specified to be the density of the gas at the inlet temperature for a site elevation of 1,400 m.

Analysis Results

The temperature profiles for the two turbulent flow models for the canister surface and for the Concrete Cask liner surface are shown in Figure 4.A.4.8-3 and Figure 4.A.4.8-4, respectively. The results confirm that both turbulent flow models conservatively predict the temperatures on both the canister surface and the concrete liner surface. The temperature profiles for the low Re k-ε model provided a slight improvement over the k-ω turbulent flow model.

Application of the Benchmark to the UNITAD Evaluation

The primary purpose of the preparation of this benchmark is to confirm the selection of the turbulent flow model. For this reason, the vacuum test in EPRI TR-100305 [3] was selected, which minimized the uncertainties of the thermal behavior internal to the Canister. The air flow in the annulus is primarily controlled by the height, the radial thickness of the annulus and the heat load. Since the test in EPRI TR-100305 [3] employed actual fuel assemblies, the heights of the annulus in the thermal test and in the UNITAD design are sufficiently similar. The thicknesses of the annulus region for the thermal test and for the UNITAD are 3 inches and 3.75 inches, respectively. A metric for buoyancy-driven flows for vertical parallel surfaces is a modified Rayleigh's number in which the standard Rayleigh number is factored by the ratio (D/L) of the gap thickness (D) and the length (L). Since D/L is actually larger for the NAC-UMS® design, this would indicate that the modified Rayleigh number is larger for UNITAD, resulting in increased convection. Likewise, the design basis heat load for UNITAD is 25 kW, as compared to the thermal test using 14.9 kW. Increased heat load would only increase the level of turbulence in the annulus region.

Conclusions

In this section, a thermal evaluation has been performed for the thermal test described in EPRI TR-100305 [3]. The analysis results indicate that the two-dimensional axisymmetric modeling methodology using the k-ω turbulent flow model is acceptable to determine a bounding maximum fuel temperature and bounding concrete temperatures. The benchmark also confirms the use of the operating density associated with the ambient temperature for the Concrete Cask.

Figure 4.A.4.8-1 Two-Dimensional Axisymmetric FLUENT Model of the VSC-17

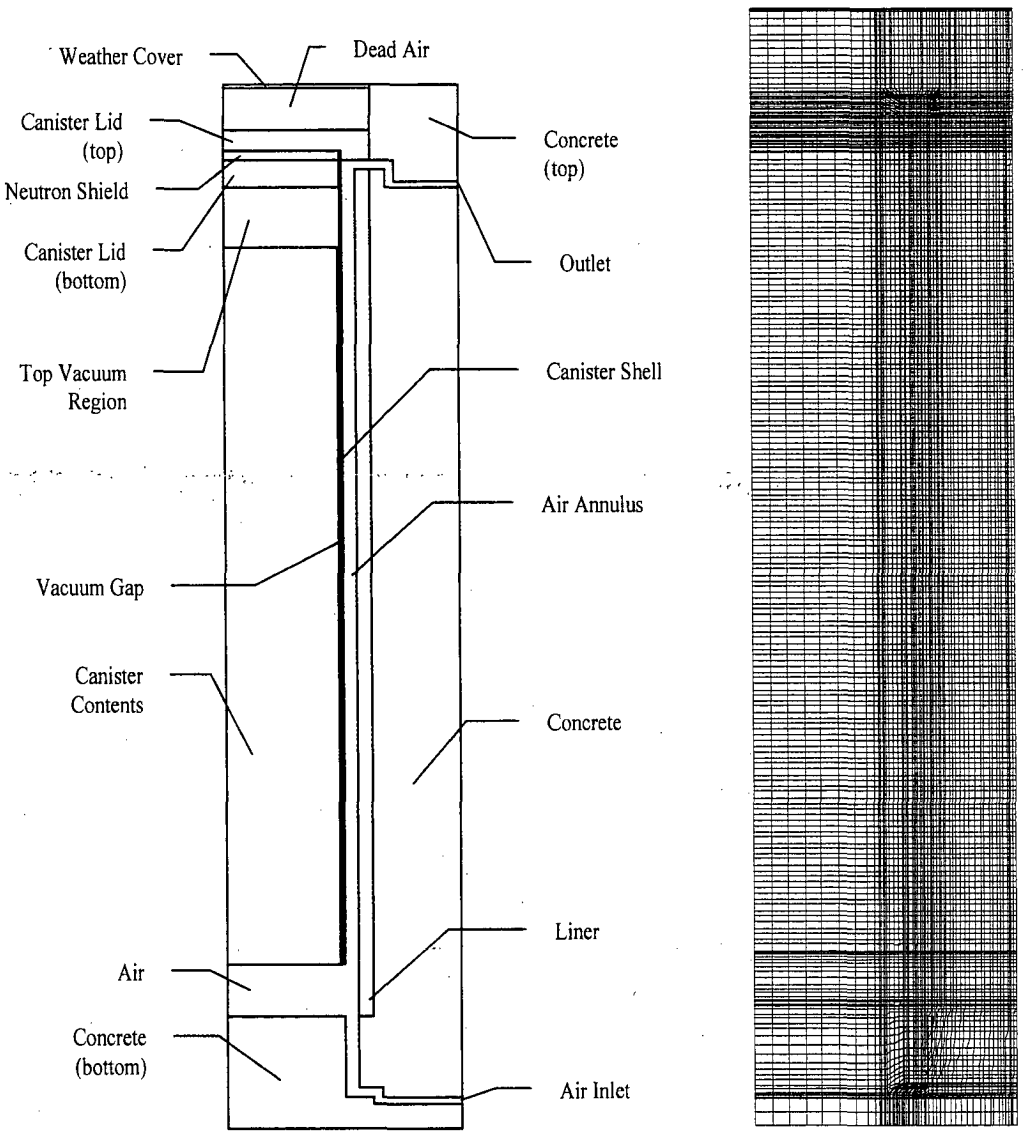

Figure 4.A.4.8-2 ANSYS Model for Effective Properties Calculation

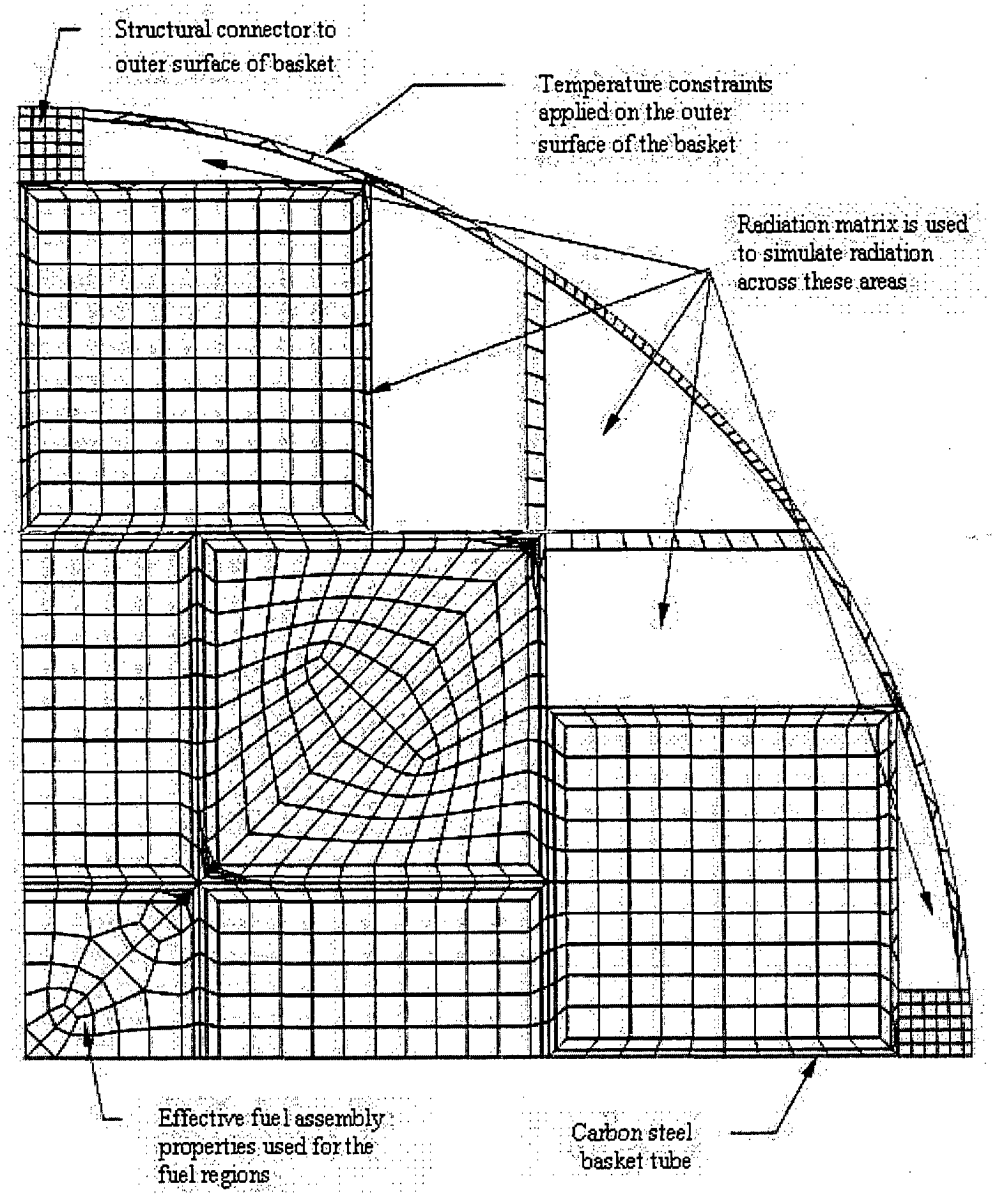

Figure 4.A.4.8-3 Temperature Profiles for the Canister Surface

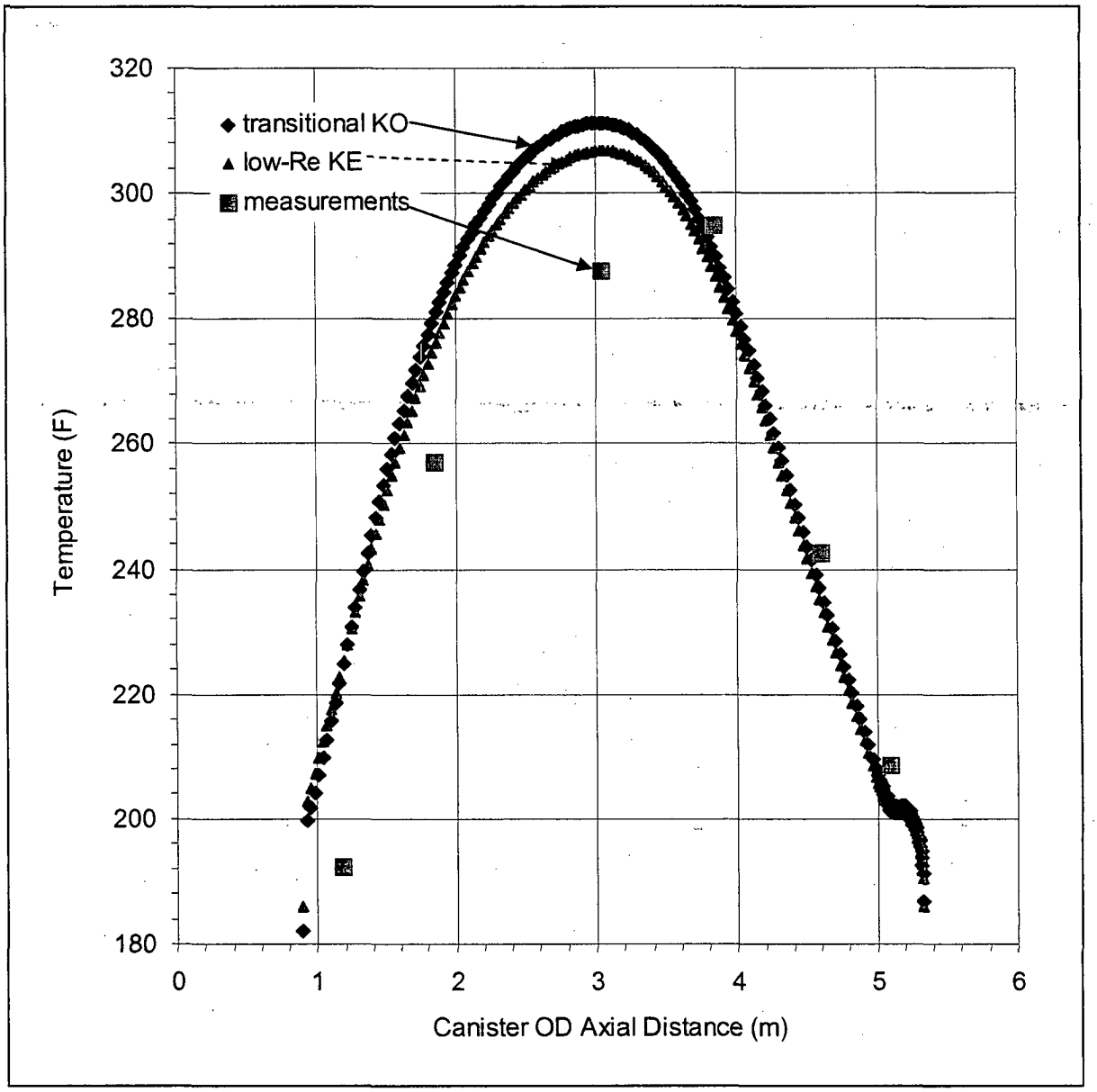

Figure 4.A.4.8-4 Temperature Profiles for the Concrete Liner Surface

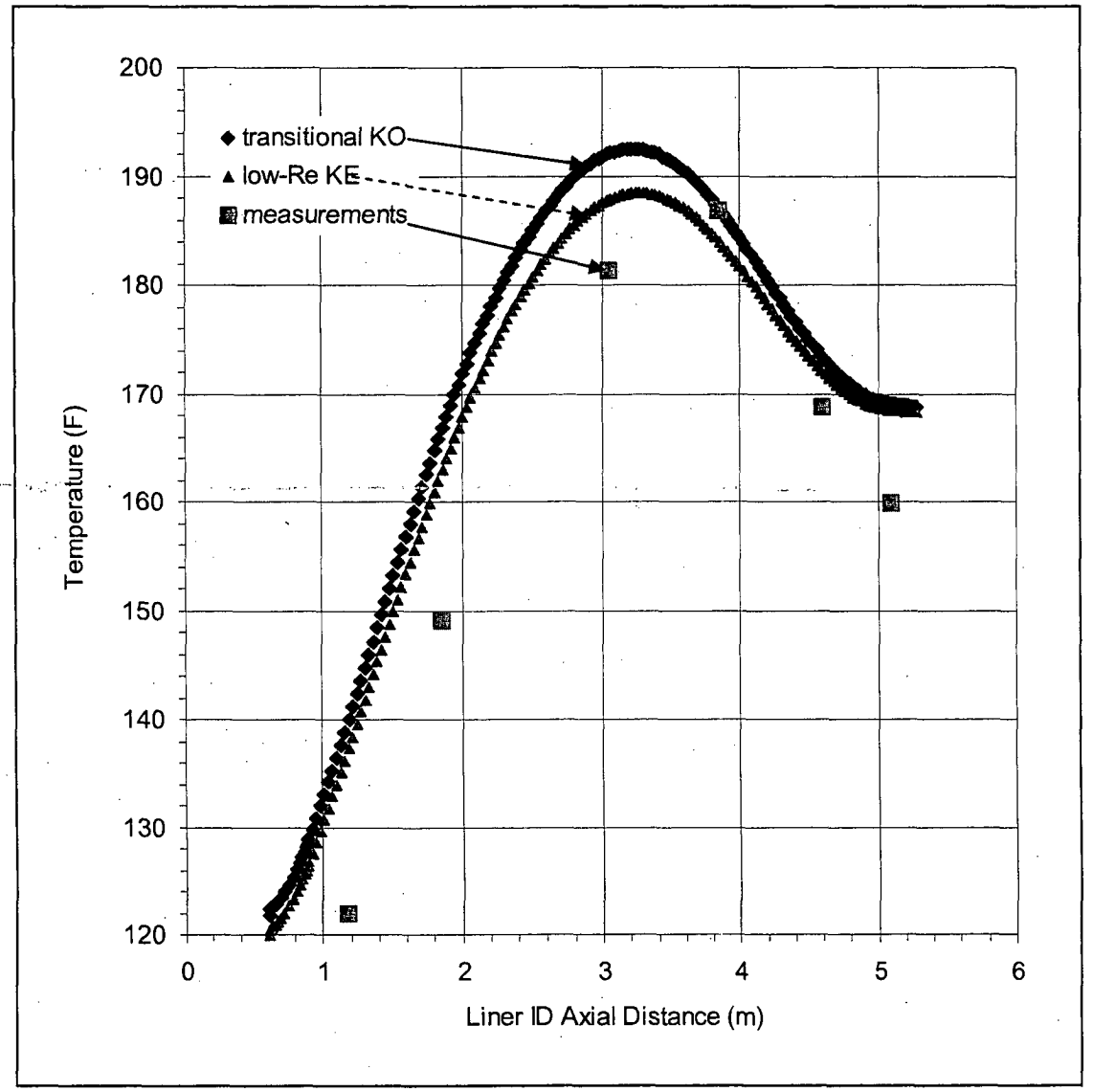

4.A.5 References

The UNITAD Storage System references are the same as those for the NAC-UMS® Storage System in FSAR Section 4.6, along with the following additional references.

1. ASME Boiler and Pressure Vessel Code, 2004 Edition, 2006 Addenda.

2. FLUENT, Revision 6.3.26, Fluent Inc, Lebanon, NH.

3. EPRI TR-100305, "Performance Testing and Analyses of the VSC-17 Ventilated Concrete Cask," Pacific Northwest Laboratory, Virginia Power Company and EG&G, Idaho National Engineering Laboratory, May 1992.

4. "The Properties of Gases and Liquids," Bruce E. Poling, etc., 5th Edition, McGraw Hill, 2001.

5. Alloy Data, Micro-Melt® NeutroSorb PLUS® Alloys, Carpenter Technology Corporation, Bridgeville, PA, September 8, 2003 Edition.

THIS PAGE INTENTIONALLY LEFT BLANK

Table of Contents

5.0 SHIELDING EVALUATION 5.1-1

5.1 Discussion and Results 5.1-1
5.1.1 Fuel Assembly Classification 5.1-4
5.1.1.1 PWR Fuel Assembly Classes 5.1-4
5.1.1.2 BWR Fuel Assembly Classes 5.1-5
5.1.2 Codes Employed 5.1-5
5.1.3 Results of Analysis 5.1-6
5.1.3.1 Dose Rates for Vertical Concrete Cask 5.1-6
5.1.3.2 Dose Rates for Transfer Cask 5.1-8

5.2 Source Specification 5.2-1
5.2.1 Design Basis Gamma Source 5.2-1
5.2.2 Design Basis Neutron Source 5.2-2
5.2.3 PWR Fuel Assembly Descriptions 5.2-3
5.2.4 BWR Fuel Assembly Descriptions 5.2-4
5.2.5 Design Basis Fuel Assemblies 5.2-6
5.2.6 Axial Profiles 5.2-7
5.2.6.1 Axial Burnup Profile 5.2-7
5.2.6.2 Axial Source Profile 5.2-7

5.3 Model Specification 5.3-1
5.3.1 Description of Radial and Axial Shielding Configurations 5.3-3
5.3.2 SCALE One-Dimensional Radial and Axial Shielding Models 5.3-4
5.3.2.1 SCALE One-Dimensional Radial Model 5.3-4
5.3.2.2 SCALE One-Dimensional Axial Model 5.3-5
5.3.3 SCALE Three-Dimensional Top and Bottom Shielding Models 5.3-5
5.3.3.1 SCALE Canister and Basket Model 5.3-6
5.3.3.2 SCALE Vertical Concrete Cask Three-Dimensional Models 5.3-7
5.3.3.3 SCALE Transfer Cask Three-Dimensional Models 5.3-8
5.3.4 MCBEND Three-Dimensional Concrete Cask Models 5.3-10
5.3.4.1 MCBEND Fuel Assembly Model 5.3-11
5.3.4.2 MCBEND Basket Model 5.2-11
5.3.4.3 MCBEND Concrete Cask Model 5.2-11

Table of Contents (continued)

5.3.5 Shield Regional Densities 5.3-12
5.3.5.1 SCALE Shield Regional Densities 5.3-12
5.3.5.2 MCBEND Shield Regional Densities 5.3-13

5.4 Shielding Evaluation 5.4-1
5.4.1 Calculational Methods 5.4-1
5.4.1.1 SCALE Package Calculational Methods 5.4-1
5.4.1.2 MCBEND Calculational Methods 5.4.2
5.4.2 Flux-to-Dose Rate Conversion Factors 5.4-3
5.4.3 Dose Rate Results 5.4-3
5.4.3.1 Vertical Concrete Cask Dose Rates 5.4-4
5.4.3.2 Standard Transfer Cask Dose Rates 5.4-6

5.5 Minimum Allowable Cooling Time Evaluation for PWR and BWR Fuel 5.5-1
5.5.1 Selection of Limiting PWR and BWR Fuel Types for Minimum Cooling Time Determination 5.5-1
5.5.2 Decay Heat Limit 5.5-2
5.5.3 Storage Cask and Standard Transfer Cask Dose Rate Limits and Dose Calculation Method 5.5-2
5.5.4 Minimum Allowable Cooling Time Determination 5.5-3
5.5.4.1 PWR and BWR Assembly Minimum Cooling Times 5.5-3

5.6 Shielding Evaluation for Site Specific Spent Fuel 5.6-1
5.6.1 Shielding Evaluation for Maine Yankee Site Specific Spent Fuel 5.6.1-1
5.6.1.1 Fuel Source Term Description 5.6.1-1
5.6.1.2 Model Specification 5.6.1-4
5.6.1.3 Shielding Evaluation 5.6.1-5
5.6.1.4 Standard Fuel Source Term 5.6.1-5

5.7 References 5.7-1

Appendix 5.A SHIELDING EVALUATION
UNITAD Storage System 5.A-i

List of Figures

Figure 5.2-1 Enveloping Axial Burnup Profile for PWR Design Basis Fuel 5.2-10
Figure 5.2-2 Enveloping Axial Burnup Profile for BWR Design Basis Fuel 5.2-10
Figure 5.2-3 PWR Photon and Neutron Axial Source Profiles 5.2-11
Figure 5.2-4 BWR Photon and Neutron Axial Source Profiles 5.2-11
Figure 5.2-5 WE 17×17 Assembly Geometrical Parameters 5.2-12
Figure 5.2-6 GE 9×9-2L Assembly Geometrical Parameters 5.2-13
Figure 5.3-1 SCALE Vent Port Model with Port Cover in Place (Dimensions in cm) 5.3-14
Figure 5.3-2 SCALE Vertical Concrete Cask Three-Dimensional Top Model PWR Design Basis 5.3-15
Figure 5.3-3 Schematic of SCALE Upper Vent Model Showing Key Points 5.3-16
Figure 5.3-4 SCALE Vertical Concrete Cask Three-Dimensional Bottom Model – PWR Design Basis 5.3-17
Figure 5.3-5 SCALE Standard Transfer Cask Three-Dimensional Top Model Including Shield and Structural Lid – PWR Design Basis 5.3-18
Figure 5.3-6 SCALE Standard Transfer Cask Three-Dimensional Bottom Model – PWR Design Basis 5.3-19
Figure 5.3-7 MCBEND Three-Dimensional Vertical Concrete Cask Model – Axial Dimensions 5.3-20
Figure 5.3-8 MCBEND Three-Dimensional Vertical Concrete Cask Model – Radial Dimensions 5.3-21
Figure 5.4-1 Vertical Concrete Cask Axial Surface Dose Rate Profile by Source Component – Azimuthal Average – PWR Fuel 5.4-10
Figure 5.4-2 Vertical Concrete Cask Axial Surface Dose Rate Profile at Various Distances from Cask – Azimuthal Average – PWR Fuel 5.4-10
Figure 5.4-3 Vertical Concrete Cask Top Air Outlet Elevation Azimuthal Surface Dose Rate Profile – PWR Fuel 5.4-11
Figure 5.4-4 Vertical Concrete Cask Bottom Air Inlet Elevation Azimuthal Dose Rate Profile – PWR Fuel 5.4-11
Figure 5.4-5 Vertical Concrete Cask Top Radial Surface Dose Rate Profile – Azimuthal Maximum – PWR Fuel 5.4-12
Figure 5.4-6 Vertical Concrete Cask Surface Dose Rate Profile by Source Component – Azimuthal Average – BWR Fuel 5.4-12

List of Figures (continued)

Figure 5.4-7 Vertical Concrete Cask Surface Dose Rate Profile at Various Distances from Cask – Azimuthal Average – BWR Fuel 5.4-13
Figure 5.4-8 Vertical Concrete Cask Top Air Outlet Elevation Azimuthal Surface Dose Rate Profile – BWR Fuel 5.4-13
Figure 5.4-9 Vertical Concrete Cask Bottom Air Inlet Elevation Azimuthal Dose Rate Profile – BWR Fuel 5.4-14
Figure 5.4-10 Vertical Concrete Cask Top Radial Surface Dose Rate Profile – Azimuthal Maximum – BWR Fuel 5.4-14
Figure 5.4-11 Standard Transfer Cask Axial Surface Dose Rate Profile – Dry Canister – PWR Fuel 5.4-15
Figure 5.4-12 Standard Transfer Cask Axial Surface Dose Rate Profile – Wet Canister – PWR Fuel 5.4-15
Figure 5.4-13 Standard Transfer Cask Axial Dose Rate Profile at Various Distances from Cask – Dry Canister – PWR Fuel 5.4-16
Figure 5.4-14 Standard Transfer Cask Axial Dose Rate Profile at Various Distances from Cask – Wet Canister – PWR Fuel 5.4-16
Figure 5.4-15 Standard Transfer Cask Top Radial Surface Dose Rate Profile – Shield Lid and Temporary Shield – Vent Port Covers Off – Wet Canister – PWR Fuel 5.4-17
Figure 5.4-16 Standard Transfer Cask Top Radial Surface Dose Rate Profile – Shield Lid and Temporary Shield – Vent Port Covers On – Dry Canister – PWR Fuel 5.4-17
Figure 5.4-17 Standard Transfer Cask Top Radial Surface Dose Rate Profile – Shield Lid and Structural Lid – Dry Canister – PWR Fuel 5.4-18
Figure 5.4-18 Standard Transfer Cask Bottom Radial Surface Dose Rate Profile – Dry Canister – PWR Fuel 5.4-18
Figure 5.4-19 Standard Transfer Cask Bottom Radial Surface Dose Rate Profile – Wet Canister – PWR Fuel 5.4-19
Figure 5.4-20 Standard Transfer Cask Axial Surface Dose Rate Profile – Dry Canister – BWR Fuel 5.4-19
Figure 5.4-21 Standard Transfer Cask Axial Surface Dose Rate Profile – Wet Canister – BWR Fuel 5.4-20

List of Figures (continued)

Figure 5.4-22 Standard Transfer Cask Axial Surface Dose Rate Profile at Various Distances From Cask – Dry Canister – BWR Fuel 5.4-20
Figure 5.4-23 Standard Transfer Cask Axial Surface Dose Rate Profile at Various Distances From Cask – Wet Canister – BWR Fuel 5.4-21
Figure 5.4-24 Standard Transfer Cask Top Radial Surface Dose Rate Profile – Shield Lid and Temporary Shield – Vent Port Covers Off – Wet Canister – BWR Fuel 5.4-21
Figure 5.4-25 Standard Transfer Cask Top Radial Surface Dose Rate Profile – Shield Lid and Temporary Shield – Vent Port Covers On – Dry Canister – BWR Fuel 5.4-22
Figure 5.4-26 Standard Transfer Cask Top Radial Surface Dose Rate Profile – Shield Lid and Structural Lid – Dry Canister – BWR Fuel 5.4-22
Figure 5.4-27 Standard Transfer Cask Bottom Radial Surface Dose Rate Profile – Dry Canister – BWR Fuel 5.4-23
Figure 5.4-28 Standard Transfer Cask Bottom Radial Surface Dose Rate Profile – Wet Canister – BWR Fuel 5.4-23
Figure 5.6.1-1 SAS2H Model Input File – CE 14 × 14 ..... 5.6.1-15

List of Tables

Table 5.1-1 Summary of Maximum Dose Rates: Vertical Concrete Cask with PWR Fuel 5.1-11
Table 5.1-2 Summary of Maximum Dose Rates: Vertical Concrete Cask with BWR Fuel 5.1-11
Table 5.1-3 Summary of Maximum Dose Rates: Standard or Advanced Transfer Cask with PWR Fuel 5.1-12
Table 5.1-4 Summary of Maximum Dose Rates: Standard or Advanced Transfer Cask with BWR Fuel 5.1-12
Table 5.2-1 Description of Design Basis Fuel Assembly Types 5.2-14
Table 5.2-2 Representative Design Basis PWR Fuel Assembly Physical Characteristics 5.2-15
Table 5.2-3 Representative Design Basis PWR Fuel Assembly Hardware Data Per Assembly 5.2-16
Table 5.2-4 Nuclear Parameters of Design Basis PWR Fuel Assemblies with 3.7 wt % ^{235}U Enrichment, 40,000 MWD/MTU Burnup, 5-Year Cooling Time 5.2-17
Table 5.2-5 Design Basis PWR Fuel Assembly Activated Hardware Comparison [γ/s], 5-Year Cooling Time 5.2-17
Table 5.2-6 Representative Design Basis BWR Fuel Physical Characteristics 5.2-18
Table 5.2-7 Representative Design Basis BWR Fuel Assembly Hardware Data 5.2-19
Table 5.2-8 Nuclear and Thermal Parameters of Design Basis BWR Fuel with 3.25 wt % ^{235}U Enrichment, 40,000 MWD/MTU Burnup, and 5-Year Cooling Time 5.2-20
Table 5.2-9 Design Basis BWR Fuel Assembly Activated Hardware Comparison [γ/s] at 40,000 MWD/MTU Burnup, 5-Year Cooling Time 5.2-20
Table 5.2-10 Standard Transfer Cask One-Dimensional Top Axial Dose Rate Results Relative to PWR Design Basis 5.2-21
Table 5.2-11 Standard Transfer Cask One-Dimensional Radial Dose Rate Results Relative to PWR Design Basis 5.2-21
Table 5.2-12 Standard Transfer Cask One-Dimensional Bottom Axial Dose Rate Results Relative to PWR Design Basis 5.2-21

List of Tables (continued)

Table 5.2-13 Standard Transfer Cask One-Dimensional Top Axial Dose Rate Results Relative to BWR Design Basis 5.2-22
Table 5.2-14 Standard Transfer Cask One-Dimensional Radial Dose Rate Results Relative to BWR Design Basis 5.2-212
Table 5.2-15 Standard Transfer Cask One-Dimensional Bottom Axial Dose Rate Results Relative to BWR Design Basis 5.2-23
Table 5.2-16 Design Basis PWR 5-Year Fuel Neutron Source Spectrum 5.2-24
Table 5.2-17 Design Basis PWR 5-Year Fuel Photon Spectrum 5.2-25
Table 5.2-18 Design Basis PWR 5-Year Hardware Photon Spectrum 5.2-26
Table 5.2-19 Design Basis BWR 5-Year Fuel Neutron Source Spectrum 5.2-27
Table 5.2-20 Design Basis BWR 5-Year Fuel Photon Spectrum 5.2-28
Table 5.2-21 Design Basis BWR 5-Year Hardware Photon Spectrum 5.2-29
Table 5.2-22 Source Rate Versus Burnup Fit Parameters 5.2-30
Table 5.2-23 SAS4 SCALE Factors Applied to Neutron Source Rate at Average Burnup 5.2-30
Table 5.2-24 Additional SCALE Factors Applied to Region Source Rates for SAS4 Analysis 5.2-30
Table 5.2-25 PWR Axial Source Profile 5.2-31
Table 5.2-26 BWR Axial Source Rate Profile 5.2-32
Table 5.2-27 MCBEND Three-Dimensional Design Basis Fuel Assembly Descriptions 5.2-33
Table 5.2-28 MCBEND Standard 28 Group Neutron Boundaries 5.2-34
Table 5.2-29 MCBEND Standard 22 Group Gamma Boundaries 5.2-345
Table 5.2-30 MCBEND Fuel Assembly Hardward Mass and Flux Factors by Source Region 5.2-36
Table 5.3-1 SCALE PWR Dry Canister Material Densities 5.3-22
Table 5.3-2 SCALE PWR Wet Canister Material Densities 5.3-23
Table 5.3-3 SCALE BWR Dry Canister Material Densities 5.3-25
Table 5.3-4 SCALE BWR Wet Canister Material Densities 5.3-26
Table 5.3-5 SCALE Standard Transfer Cask Material Densities 5.3-28
Table 5.3-6 MCBEND Fuel Region Homogenization 5.3-29
Table 5.3-7 MCBEND Fuel Assembly Hardware Region Homogenization 5.3-30
Table 5.3-8 MCBEND Homogenized Fuel Regional Densities 5.3-31

List of Tables (continued)

Table 5.3-9 MCBEND Regional Densities for Concrete Cask Structural and Shield Materials 5.3-32
Table 5.4-1 ANSI Standard Neutron Flux-To-Dose Rate Factors 5.4-24
Table 5.4-2 ANSI Standard Gamma Flux-To-Dose Rate Factors 5.4-25
Table 5.4-3 ANSI Standard Neutron Flux-to-Dose Rate Factors in MCBEND Group Structure 5.4-26
Table 5.4-4 ANSI Standard Gamma Flux-to-Dose Rate Factors in MCBEND Group Strucure 5.4-27
Table 5.5-1 Limiting PWR and BWR Fuel Types Based on Uranium Loading 5.5-4
Table 5.5-2 Design Basis Assembly Dose Rate Limit (mrem/hr) 5.5-4
Table 5.5-3 Radial Surface Response to Neutrons 5.5-5
Table 5.5-4 Radial Surface Response to Gammas 5.5-5
Table 5.5-5 Westinghouse 17×17 Minimum Cooling Time Evaluation 5.5-6
Table 5.5-6 GE 9×9-2L Minimum Cooling Time Evaluation 5.5-7
Table 5.5-7 Minimum Cooling Time Versus Burnup/Initial Enrichment for PWR Fuel 5.5-8
Table 5.5-8 Minimum Cooling Time Versus Burnup/Initial Enrichment BWR Fuel 5.5-10
Table 5.6.1-1 Maine Yankee CEA Exposure History by Group 5.6.1-16
Table 5.6.1-2 Maine Yankee CEA Hardware Spectra – 5, 10, 15 and 20 Years Cool Time 5.6.1-17
Table 5.6.1-3 Maine Yankee ICI Thimble Exposure History and Source Rate by Group 5.6.1-18
Table 5.6.1-4 Maine Yankee Core Exposure History by Cycle of Operation 5.6.1-19
Table 5.6.1-5 Burnup of Maine Yankee Fuel Assemblies with Stainless Steel Replacement Rods 5.6.1-20
Table 5.6.1-6 Contents of Maine Yankee Consolidated Fuel Lattices CN-1 and CN-10 ..... 5.6.1-20
Table 5.6.1-7 Maine Yankee CE 14 × 14 Homogenized Fuel Region Isotopic Composition 5.6.1-21
Table 5.6.1-8 Isotopic Compositions of Maine Yankee CE 14 × 14 Fuel Assembly Non-Fuel Source Regions 5.6.1-21
Table 5.6.1-9 Isotopic Compositions of Maine Yankee CE 14 × 14 Canister Annular Region Materials (One-Dimensional Analysis Only) 5.6.1-22

List of Tables (continued)

Table 5.6.1-10 Loading Table for Maine Yankee CE 14 × 14 Fuel with No Non-Fuel Material – Required Cool Time in Years Before Assembly is Acceptable 5.6.1-23
Table 5.6.1-11 Three-Dimensional Shielding Analysis Results for Various Maine Yankee CEA Configurations Establishing One-Dimensional Dose Rate Limits for Loading Table Analysis 5.6.1-25
Table 5.6.1-12 Loading Table for Maine Yankee CE 14 × 14 Fuel Containing CEA Cooled to Indicated Time 5.6.1-26
Table 5.6.1-13 Establishment of Dose Rate Limit for Maine Yankee ICI Thimble Analysis 5.6.1-27
Table 5.6.1-14 Required Cool Time for Maine Yankee Fuel Assemblies with Activated Stainless Steel Replacement Rods 5.6.1-27
Table 5.6.1-15 Maine Yankee Consolidated Fuel Model Parameters 5.6.1-28
Table 5.6.1-16 Maine Yankee Source Rate Analysis for CN-10 Consolidated Fuel Lattice 5.6.1-28
Table 5.6.1-17 Additional Maine Yankee Non-Fuel Hardware Characterization – Non-Neutron Sources 5.6.1-28
Table 5.6.1-18 Additional Maine Yankee Non-Fuel Hardware Characterization – Neutron Sources 5.6.1-29
Table 5.6.1-19 Pu-Be Assembly Hardware Spectra (Cycles 1-13) – 5 Year Cool Time from 1/1/1997 ..... 5.6.1-29
Table 5.6.1-20 Additional Maine Yankee Non-Fuel Hardware – HW Assembly Spectra (Class 2 Canister) – 5 Year Cool Time from 1/1/1997 ..... 5.6.1-30
Table 5.6.1-21 Additional Maine Yankee Non-Fuel Hardware – Source Assembly Spectra – 5 Year Cool Time from 1/1/1997 ..... 5.6.1-31
Table 5.6.1-22 Additional Maine Yankee Non-Fuel Hardware – Hardware Assembly Dose Rates (Class 2) – 5 Years Cooled from 1/1/1997 ..... 5.6.1-32
Table 5.6.1-23 Additional Maine Yankee Non-Fuel Hardware – Storage Cask Source Assembly Surface Dose Rates – 5 Years Cooled from 1/1/1997 ..... 5.6.1-33
Table 5.6.1-24 Additional Maine Yankee Non-Fuel Hardware – Transfer Cask Source Assembly Surface Dose Rates – 5 Years Cooled from 1/1/1997 ..... 5.6.1-34

THIS PAGE INTENTIONALLY LEFT BLANK

Appendix 5.A SHIELDING EVALUATION
UNITAD Storage System

Table of Contents

5.A SHIELDING EVALUATION 5.A-1

5.A.1 Discussion and Results 5.A.1-1
5.A.2 Source Specification 5.A.2-1

5.A.2.1 Gamma Source 5.A.2-2
5.A.2.2 Neutron Source 5.A.2-3
5.A.2.3 Bounding Gamma and Neutron Spectrum 5.A.2-4

5.A.3 Axial Burnup Profile 5.A.3-1
5.A.4 Axial Source Profile 5.A.4-1
5.A.5 Model Specification 5.A.5-1

5.A.5.1 Description of Radial and Axial Shielding Configurations 5.A.5-2
5.A.5.2 MCNP Detector Mesh Definition 5.A.5-3
5.A.5.3 NAC-CASC Model 5.A.5-3
5.A.5.4 Offsite Particulate and Gas Release 5.A.5-4
5.A.5.5 Shield Regional Densities 5.A.5-5

5.A.6 Shielding Calculations 5.A.6-1

5.A.6.1 Calculation Methods 5.A.6-1
5.A.6.2 Flux-to-Dose Rate Conversion Factors 5.A.6-3
5.A.6.3 Cask Dose Rate and Exposure Results 5.A.6-3
5.A.6.4 NAC-CASC Dose Evaluation 5.A.6-4
5.A.6.5 Surface Contamination Release 5.A.6-4

5.A.7 Shielding Evaluation Detail 5.A.7-1

5.A.7.1 Contents Description 5.A.7-1
5.A.7.2 Response Function Method 5.A.7-3
5.A.7.3 21-Assembly PWR System 5.A.7-19
5.A.7.4 Nonfuel Hardware Components – BPRA and Thimble Plug 5.A.7-36
5.A.7.5 Nonfuel Hardware Component – Control Element Assemblies (CEA) 5.A.7-43
5.A.7.6 Sample Input Files 5.A.7-45
5.A.7.7 Axial Zoned Fuel/End Blanket Discussion 5.A.7-71
5.A.7.8 Transfer Cask Moderator Condition Study 5.A.7-76
5.A.7.9 Thermally Limited Cool Time 5.A.7-79

5.A.8 References 5.A.8-1

List of Figures

Figure 5.A.3-1 Enveloping Axial Burnup Profile 5.A.3-3
Figure 5.A.3-2 Storage Cask Dose Rates as a Function of Burnup 5.A.3-4
Figure 5.A.3-3 Transfer Cask Dose Rates as a Function of Burnup 5.A.3-4
Figure 5.A.3-4 Normalized Burnup Profiles from YAEC-1937 (Grouped in 5 GWd/MTU Bins) 5.A.3-5
Figure 5.A.4-1 Gamma and Neutron Axial Source Profiles 5.A.4-3
Figure 5.A.5-1 Concrete Cask Model – Primary Shield Dimensions 5.A.5-6
Figure 5.A.5-2 Concrete Cask Model – Bottom Weldment 5.A.5-7
Figure 5.A.5-3 Transfer Cask with Canister Model 5.A.5-8
Figure 5.A.5-4 MCNP Detector Grid Locations for Concrete Cask 5.A.5-9
Figure 5.A.5-5 Typical 20-Cask Array (2×10) 5.A.5-10
Figure 5.A.5-6 NAC-CASC "Black Body" Assumption Test along Short (X-Axis) Side of Array 5.A.5-11
Figure 5.A.5-7 NAC-CASC "Black Body" Assumption Test along Long (Y-Axis) Side of Array 5.A.5-12
Figure 5.A.6-1 Concrete Cask Radial Dose Rate Profiles 5.A.6-6
Figure 5.A.6-2 Concrete Cask Top Axial Dose Rate Profiles 5.A.6-6
Figure 5.A.6-3 Air Outlet Elevation Surface Dose Rate Profile 5.A.6-7
Figure 5.A.6-4 Air Inlet Elevation Surface Dose Rate Profile 5.A.6-7
Figure 5.A.6-5 Transfer Cask Radial Dose Rate Profiles 5.A.6-8
Figure 5.A.6-6 Transfer Cask Top Axial Dose Rate Profiles 5.A.6-8
Figure 5.A.6-7 Transfer Cask Bottom Axial Dose Rate Profiles 5.A.6-9
Figure 5.A.6-8 Bounding Site Boundary Dose vs. Distance 5.A.6-10
Figure 5.A.7.2-1 Comparison of Response Method to Direct Solution: Concrete Cask Radial Surface – Low Burnup/Low Enrichment 5.A.7-6
Figure 5.A.7.2-2 Comparison of Response Method to Direct Solution: Concrete Cask Radial Surface – Medium Burnup/Medium Enrichment 5.A.7-7
Figure 5.A.7.2-3 Comparison of Response Method to Direct Solution: Concrete Cask Radial Surface – Bounding Source Term 5.A.7-8
Figure 5.A.7.2-4 Comparison of Response Method to Direct Solution: Concrete Cask Top Surface – Bounding Source Term 5.A.7-9
Figure 5.A.7.2-5 Comparison of Response Method to Direct Solution: Transfer Cask Radial Surface – Bounding Source Term 5.A.7-10

List of Figures (continued)

Figure 5.A.7.2-6 Comparison of Response Method to Direct Solution: Transfer Cask Top Surface – Bounding Source Term 5.A.7-11
Figure 5.A.7.2-7 Concrete Cask Radial Dose Rates– Fresh Fuel versus Spent Fuel Isotopics – 45 GWd/MTU, 4.1 wt % ^{235}U 5.A.7-12
Figure 5.A.7.2-8 Transfer Cask Radial Dose Rates– Fresh Fuel versus Spent Fuel Isotopics – 45 GWd/MTU, 4.1 wt % ^{235}U 5.A.7-13
Figure 5.A.7.2-9 Comparison of Response Method to Direct Solution: Concrete Cask Radial Surface – 45 GWd/MTU, 4.1 wt % ^{235}U 5.A.7-14
Figure 5.A.7.3-1 Basket within Canister – Radial Detail 5.A.7-22
Figure 5.A.7.3-2 Basket within Canister – Axial Detail 5.A.7-23
Figure 5.A.7.3-3 Transfer Cask Side Dose Rate Profiles 5.A.7-24
Figure 5.A.7.3-4 Transfer Cask Side Surface Dose Rate Profile by Source 5.A.7-24
Figure 5.A.7.3-5 Transfer Cask Top Dose Rate Profiles 5.A.7-25
Figure 5.A.7.3-6 Transfer Cask Top Surface Dose Rate Profile by Source 5.A.7-25
Figure 5.A.7.3-7 Transfer Cask Bottom Dose Rate Profiles 5.A.7-26
Figure 5.A.7.3-8 Transfer Cask Bottom Surface Dose Rate Profile by Source 5.A.7-26
Figure 5.A.7.3-9 Concrete Cask Side Dose Rate Profiles 5.A.7-27
Figure 5.A.7.3-10 Concrete Cask Side Surface Dose Rate Profile by Source 5.A.7-27
Figure 5.A.7.3-11 Concrete Cask Top Dose Rate Profiles 5.A.7-28
Figure 5.A.7.3-12 Concrete Cask Top Surface Dose Rate Profile by Source 5.A.7-28
Figure 5.A.7.3-13 Concrete Cask Air Outlet Elevation Dose Rate Profile 5.A.7-29
Figure 5.A.7.3-14 Concrete Cask Air Inlet Elevation Dose Rate Profile 5.A.7-29
Figure 5.A.7.3-15 Single Cask Exposure vs. Distance 5.A.7-30
Figure 5.A.7.3-16 20-Cask Array Exposure vs. Distance 5.A.7-31
Figure 5.A.7.3-17 Contour of the Controlled Area Boundary for the 2×10 Cask Array ... 5.A.7-32
Figure 5.A.7.4-1 BPRA Concrete Cask Radial Dose Rate Profiles 5.A.7-39
Figure 5.A.7.4-2 Thimble Plug Concrete Cask Radial Surface Dose Rate Profile 5.A.7-40
Figure 5.A.7.6-1 Sample SAS2H Input File – Source Term 5.A.7-46
Figure 5.A.7.6-2 Sample MCNP5 Input File – Transfer Cask 5.A.7-48
Figure 5.A.7.6-3 Sample MCNP5 Input File – Concrete Cask 5.A.7-56
Figure 5.A.7.6-4 Sample NAC-CASC Input File 5.A.7-67
Figure 5.A.7.7-1 Millstone Sample Axial Burnup Profiles 5.A.7-73
Figure 5.A.7.8-1 Canister Flood Study – Radial Surface Dose Rate Profile 5.A.7-77
Figure 5.A.7.8-2 Canister Flood Study – Top Axial Surface Dose Rate Profile 5.A.7-78

List of Tables

Table 5.A.1-1 Summary of Transfer Cask Maximum Dose Rates 5.A.1-5
Table 5.A.1-2 Summary of Concrete Cask Maximum Dose Rates 5.A.1-6
Table 5.A.1-3 Bounding Payload Type for Each Cask Surface 5.A.1-7
Table 5.A.2-1 Key Fuel Assembly Characteristics 5.A.2-5
Table 5.A.2-2 22-Group Gamma Energy Spectrum 5.A.2-6
Table 5.A.2-3 Bounding Regional Nonfuel Hardware Masses 5.A.2-7
Table 5.A.2-4 28-Group Neutron Energy Spectrum 5.A.2-8
Table 5.A.2-5 Gamma Source Spectrum – Maximum Radial Dose Rate Configuration 5.A.2-9
Table 5.A.2-6 Neutron Source Spectrum – Maximum Radial Dose Rate Configuration 5.A.2-10
Table 5.A.4-1 Axial Source Profile Integration 5.A.4-4
Table 5.A.5-1 Key Canister Shielding Features 5.A.5-13
Table 5.A.5-2 Key Concrete Cask Shielding Features 5.A.5-13
Table 5.A.5-3 Key Transfer Cask Shielding Features 5.A.5-13
Table 5.A.5-4 Typical Radial Surface Detector Division 5.A.5-14
Table 5.A.5-5 Typical Top Surface Detector Division 5.A.5-14
Table 5.A.5-6 Typical Air Inlet and Outlet Detector Division 5.A.5-14
Table 5.A.5-7 Basket, Canister, and Transfer and Concrete Cask Material Description 5.A.5-15
Table 5.A.5-8 Sample Fuel Region Homogenized Material Description (17a Assembly) 5.A.5-16
Table 5.A.6-1 Neutron Flux-to-Dose Rate Conversion Factors 5.A.6-11
Table 5.A.6-2 Gamma Flux-to-Dose Rate Conversion Factors 5.A.6-11
Table 5.A.6-3 Dose Summary at 100 meters from Canister Surface Contamination Release 5.A.6-12
Table 5.A.7.1-1 Hybrid Fuel Assembly Geometry Data 5.A.7-2
Table 5.A.7.1-2 Hybrid Fuel Assembly Nonzirconium Alloy Hardware Masses 5.A.7-2
Table 5.A.7.1-3 Sample In-core Characteristics 5.A.7-2
Table 5.A.7.2-1 Response Method to Direct Calculation Comparison – Concrete Cask 5.A.7-15
Table 5.A.7.2-2 Sample Gamma Response Calculation for Concrete Cask Radial Surface – Fuel Centerline (4.1 wt %, 45 GWd/MTU, 5-Year Cooled 17a Hybrid) 5.A.7-16

List of Tables (continued)

Table 5.A.7.2-3 Sample Neutron Response Calculation for Concrete Cask Radial Surface – Fuel Centerline (4.1 wt %, 45 GWd/MTU, 5-Year Cooled 17a Hybrid) 5.A.7-17
Table 5.A.7.2-4 Sample Hardware Gamma (Lower End-Fitting) Response Calculation for Concrete Cask Radial Surface – Lower End-Fitting Elevation (4.1 wt%, 45 GWd/MTU, 5-Year Cooled 17a Hybrid) 5.A.7-18
Table 5.A.7.3-1 Sample Fuel Homogenization – 17a Assembly 5.A.7-33
Table 5.A.7.3-2 Sample Nonfuel Homogenizations– 17a Assembly 5.A.7-33
Table 5.A.7.3-3 Key Basket Geometry Features 5.A.7-33
Table 5.A.7.3-4 Sample Minimum Cool Time Solution 5.A.7-34
Table 5.A.7.3-5 Fuel Loading Table 5.A.7-34
Table 5.A.7.3-6 Maximum Transfer Cask Surface Dose Rates 5.A.7-35
Table 5.A.7.3-7 Maximum Concrete Cask Surface Dose Rates 5.A.7-35
Table 5.A.7.3-8 Concrete Cask Bounding Surface Currents 5.A.7-35
Table 5.A.7.3-9 Rectangular Controlled Area Boundary for the 2×10 Cask Array 5.A.7-35
Table 5.A.7.4-1 Sample BPRA Hardware Summary – Westinghouse 15×15 Core 5.A.7-41
Table 5.A.7.4-2 Bounding Regional Nonfuel Hardware Masses 5.A.7-41
Table 5.A.7.4-3 BPRA Dose Rate Contributions – Westinghouse 17×17 ..... 5.A.7-42
Table 5.A.7.4-4 Thimble Plug Dose Rate Contributions – Westinghouse 17×17 ..... 5.A.7-42
Table 5.A.7.5-1 Bounding CEA Descriptions 5.A.7-44
Table 5.A.7.5-2 CEA Dose Rate Contributions – Westinghouse 17×17 ..... 5.A.7-44
Table 5.A.7.7-1 Zoned Fuel and Profile Effects on Source Magnitudes 5.A.7-74
Table 5.A.7.7-2 Millstone Zoned Fuel Effects on Source Magnitudes 5.A.7-75
Table 5.A.7.9-1 Low Burnup Fuel – Minimum Fuel Assembly Enrichment (5-Year Cool Time) for the UNITAD STORAGE SYSTEM 5.A.7-80
Table 5.A.7.9-2 Loading Table for UNITAD STORAGE SYSTEM PWR Fuel – 22 kW/Cask 5.A.7-81
Table 5.A.7.9-3 Additional Cool Time Required for Loading Nonfuel Components For the UNITAD STORAGE SYSTEM 5.A.7-82

THIS PAGE INTENTIONALLY LEFT BLANK

5.A SHIELDING EVALUATION

This appendix describes the UNITAD Storage System shielding design and the analysis used to establish bounding radiological dose rates for the storage of PWR fuel assemblies. PWR fuel assemblies may contain control components including control element assemblies (CEAs), burnable poison rod assemblies (BPRAs), or thimble plugs (also referred to as flow mixers). The analysis shows that the system meets the requirements of 10 CFR 72.104 and 10 CFR 72.106 and complies with the requirements of 10 CFR 20 with regard to annual and occupational doses at the owner-controlled area boundary.

Specific dose rate limits for individual casks in a storage array are not established by 10 CFR 72. Annual dose limit criteria for the ISFSI-controlled area boundary are established by 10 CFR 72.104 and 10 CFR 72.106 for normal operating conditions and for design basis accident conditions, respectively. These regulations require that, for an array of casks in an ISFSI, the annual dose to an individual outside the controlled area boundary must not exceed 25 mrem to the whole body, 75 mrem to the thyroid, and 25 mrem to any other organ during normal operations. For a design basis accident, the dose to an individual outside the controlled area boundary must not exceed 5 rem to the whole body. In addition, the occupational dose limits and radiation dose limits established in 10 CFR Part 20 (Subparts C and D) for individual members of the public must be met.

The system is designed with two lengths of Transfer Cask and two lengths of Concrete Cask, each of which will hold a Canister of comparable length. Minimum cool times prior to fuel transfer and storage are specified as a function of minimum assembly average fuel enrichment and maximum assembly average burnup (MWd/MTU). To minimize the number of loading tables, fuel assemblies are grouped by bounding fuel and hardware mass. Key characteristics of each assembly grouping are shown in Section 5.A.2. Refer to Section 5.A.7.3 for detailed loading tables meeting the system heat load limits.

Source terms for the various vendor-supplied fuel types are generated using the SCALE 5.1 sequence as discussed in Section 5.A.2. Three-dimensional MCNP shielding evaluations provide dose rates for transfer and concrete casks at distances up to four meters. NAC-CASC, a modified version of the SKYSHINE-III code, calculates site boundary dose rates for either a single cask or cask array. See Section 5.A.6 for more detail on the shielding codes.

THIS PAGE INTENTIONALLY LEFT BLANK

5.A.1 Discussion and Results

The Canister is loaded and sealed inside a Transfer Cask and then moved into a Vertical Concrete Cask (VCC) for placement on the ISFSI pad. Dose rate evaluations are performed for the various Canister contents when the Canister is inside the Transfer Cask or the VCC.

Dose rate results are presented based on bounding heat loads and corresponding source terms based on a 25 kW cask heat load.

Transfer Cask Shielding Discussion and Dose Results

The Transfer Cask radial shield is comprised of steel inner and outer shells connected by solid steel top and bottom forgings. The shell encloses a lead gamma shield and a solid borated polymer (NS-4-FR) neutron shield. The Canister shell and the basket internal structure provide additional radial shielding. The transfer operation bottom shielding is provided by the Canister bottom plate and solid steel Transfer Cask doors. The Canister closure lid provides radiation shielding at the top of the Canister.

The three-dimensional Transfer Cask shielding analysis provides a complete, nonhomogenized representation of the Transfer Cask and Canister structure. The model assumes the following Canister/Transfer Cask configuration for all dose rate evaluations:

Dry Canister cavity - The majority of the Canister operations, in particular closure lid welding, are performed with the Canister cavity filled with water. Evaluating a dry Canister cavity is conservative. Transfer Cask dose rates from a wet canister, while containing an increased neutron source due to a higher subcritical multiplication resulting from a higher k_{eff}, are lower than those of the dry system due to the additional radiation shielding provided by the water within and surrounding the source region. Evaluations of similar Transfer Cask systems have demonstrated that dry system dose rates are significantly (50+ %) higher than those of the wet system. Confirmatory calculations comparing dry, wet, and partially flooded canister configurations are included in Section 5.A.7.

Homogenization of the fuel assembly into five source regions - While Canister and Concrete Cask features are discretely modeled, the fuel assembly is homogenized into upper and lower end-fitting (nozzle) regions, upper and lower plenum regions (lower plenum regions are modeled only for B&W fuel assemblies), and an active fuel region. For shielded applications, such as in

the heavily shielded spent fuel Transfer and Concrete Casks, homogenizing the fuel region does not introduce a significant bias in the dose rate results presented.

The Transfer Cask maximum calculated dose rates are shown in Table 5.A.1-1. Payload types producing maximum surface dose rates are listed in Table 5.A.1-3. Canister surface contamination release dose rates are shown in Section 5.A.6.5. Dose rates are based on a three-dimensional Monte Carlo analysis using surface detectors. Uncertainty in Monte Carlo results is indicated by the Fractional Standard Deviation (FSD) output from MCNP. Further detail on the detector geometry is included in Section 5.A.5. There is no design basis off-normal or accident event that will affect the shielding performance of the Transfer Cask.

Maximum Transfer Cask top, side and bottom surface average dose rates are 2,577 (0.7%) mrem/hr, 883 (0.3%) mrem/hr, and 9,438 (0.8%) mrem/hr, respectively. Access to the bottom of the Transfer Cask is limited to pool-to-workstation transfer operations and the workstation-to-Concrete Cask transfer operations. Site ALARA plans should specify limited access to areas below and around the loaded transfer cask during lifting and transfer operations.

Vertical Concrete Cask Shielding Discussion and Dose Results

The Vertical Concrete Cask (VCC), also referred to as the Concrete Cask, is composed of body and lid components. The body contains the air inlets, air outlets and the cavity for Canister placement. The lid provides environmental closure for the Canister. The radial shield design is comprised of a carbon steel inner liner surrounded by concrete. The concrete contains radial and axial rebar for structural support. As in the Transfer Cask, the Canister shell provides additional radial shielding. The Concrete Cask top shielding design is comprised of the Canister lid and Concrete Cask lid. The Concrete Cask lid incorporates both concrete and steel plates to provide additional gamma shielding. The bottom shielding is comprised of the stainless steel Canister bottom plate, the pedestal/air inlet structure, and a carbon steel base plate. Radiation streaming paths consist of air inlets located at the bottom and air outlets located above the top of the Canister, and above the annulus between the Concrete Cask body and the Canister. Air inlets and outlets are radial openings to the Concrete Cask. The inlets and outlets are axially offset from the source regions to minimize dose and meet ALARA principles.

No auxiliary shielding is considered in the Concrete Cask shielding evaluation. All components relevant to safety performance are explicitly included in the Concrete Cask model.

Homogenization of materials used in the models is limited to the fuel assembly as described in Section 5.A.6.1.

Refer to Table 5.A.1-2 for a summary of the Concrete Cask normal condition and accident event maximum calculated dose rates. Listed maximum dose rates include fuel and nonfuel hardware contributions. Payload types producing maximum surface dose rates are listed in Table 5.A.1-3. Refer to Section 5.A.6.5 for Canister surface contamination release dose rates. Dose rates are based on three-dimensional Monte Carlo analysis using surface detectors. Further detail on the detector geometry is included in Section 5.A.5.

The maximum Concrete Cask side surface dose rate is 53.2 (4.3%) mrem/hr. On the Concrete Cask top (disk), the maximum surface dose rate is 286 (0.9%) mrem/hr. The maximum inlet and outlet dose rates are 389 and 46.6 mrem/hr, respectively. No design basis normal condition or accident event exposes the bottom of the Concrete Cask.

Offsite Dose Discussion and Results

Contributions from loaded Vertical Concrete Casks to site radiation dose exposure are limited to either radiation emitted from the Concrete Cask surface or a hypothetical release of surface contamination from the Canister. As documented in Section 5.A.6.5, there is no significant site dose effect from the expected surface contamination of the system. The Canisters are comprised of a welded shell, bottom plate and lid structure. The vent and drain ports in the lid are covered by redundant welded plates. There is, therefore, no credible leakage from the system, and no significant effluent source can be released from the Canister contents. Details on the Canister confinement boundary are provided in Chapter 7, with leakage test information provided in Section 10.A.1.3.

Controlled area boundary exposure from the Concrete Cask surface radiation is evaluated using the NAC-CASC code. (As previously stated, NAC-CASC is a modified version of SKYSHINE-III.) NAC-CASC calculates the direct dose rate, as well as the air scattered contribution of the total dose rate. As the detectors are below the top surface of the cask, only the cylindrical shell (radial) cask surface current contributes a direct component to the total dose rate. NAC-CASC primary enhancements to SKYSHINE-III allow the input of an angular surface current, the input of cylindrical shell (side) and disk (top) geometries, and the accounting of Concrete Cask self-shielding (i.e., radiation emitted from one cask intersecting another cask in the array – in particular, front/back row interaction in the array). The cylindrical shell and top surfaces are

Monte Carlo sampled to generate the surface current input into the code. Each of the sampled locations represents a point source to which the SKYSHINE-III line beam response functions are applicable.

The NAC-CASC (SKYSHINE-III) method assumes that radiation emitted from the source does not interact with the cask/source structure after emission (beyond the additional routines added by NAC to account for self-shielding). This assumption does not represent a significant effect on site dose rates, as the calculated surface current is near normal to the surface and any backscatter to the cask from the air surrounding the array would then require a second backscatter from the cask surface to reach a detector location. As detector locations for site exposure are at significant distances from the array (typically 100+ meters), there would not be a significant contribution from radiation, having undergone such repeated large angle scatter.

Both a single cask and a 2×10 array of casks are evaluated for site exposure evaluations. Each cask in the array is assigned the maximum dose rate (surface current) source allowed by the cask loading tables. A combination of the maximum cask side and top rate dose cases provides for a conservative estimate on the controlled area boundary exposure, since the different fuel types produce the highest cask surface dose components.

The full-year exposure for site boundary (controlled area boundary) results is based on 8,760 hours of exposure.

Table 5.A.1-1 Summary of Transfer Cask Maximum Dose Rates

Detector	Source	Surface		1 meter	
		mrem/hr	FSD[a]	mrem/hr	FSD
Top Axial	Neutron	166	0.9%	44	0.9%
	Gamma	1688	1.0%	791	0.8%
	BPRA/TP	723	0.9%	338	0.8%
	Total	2577	0.7%	1173	0.6%
Radial	Neutron	426	0.3%	142	0.2%
	Gamma	395	0.6%	171	0.3%
	BPRA/TP	62	0.8%	27	0.4%
	Total	883	0.3%	340	0.2%
Bottom Axial	Neutron	1235	0.7%	298	0.5%
	Gamma	8081	0.9%	3429	0.4%
	BPRA/TP	122	2.9%	54	1.1%
	Total	9438	0.8%	3781	0.4%

[a] Fractional standard deviation.

Table 5.A.1-2 Summary of Concrete Cask Maximum Dose Rates[a]

Detector	Source	Surface		1 meter	
		mrem/hr	FSD[b]	mrem/hr	FSD
Top Axial	Neutron	6.4	3.1%	2.9	3.6%
	Gamma	196.1	1.2%	75.4	1.5%
	BPRA/TP	83.2	0.9%	32.6	1.4%
	Total	285.7	0.9%	110.9	1.1%
Radial	Neutron	4.8	3.0%	1.6	3.8%
	Gamma	47.5	4.8%	21.8	6.5%
	BPRA/TP	0.9	7.2%	0.5	7.5%
	Total	53.2	4.3%	23.9	6.0%
Air Inlet	Neutron	37.1	2.2%	5.0	3.1%
	Gamma	345.9	1.6%	62.6	2.1%
	BPRA/TP	6.0	3.5%	1.1	6.2%
	Total	389.0	1.4%	68.7	1.9%
Air Outlet	Neutron	2.6	1.5%	0.3	3.6%
	Gamma	31.2	2.1%	3.7	3.7%
	BPRA/TP	12.8	1.3%	1.5	2.7%
	Total	46.6	1.4%	5.5	2.6%

[a] Dose rates are for normal conditions. For the design basis missile impact, the maximum dose rate increases to 82.8 (3.4%) mrem/hr at the cask surface and 42.6 (3.8%) mrem/hr at 1 meter from the cask surface.
[b] Fractional standard deviation.

Table 5.A.1-3 Bounding Payload Type for Each Cask Surface

Cask	Surface	Insert	Core Type[a]	Max MTU	ID[b]	Cool Time (yrs)	Assembly Avg. Burnup (GWd/MTU)[c]	Initial Enrichment (wt% ^{235}U)
Transfer	Radial	BPRA	WE 15×15	0.4671	15a	5.4	45	2.7
Transfer	Top	TP	B&W 17×17	0.4681	17b	5.5	45	2.7
Transfer	Bottom	BPRA	WE 14×14	0.4144	14b	5.0	45	2.7
VCC	Radial	BPRA	WE 14×14	0.4144	14b	5.0	45	2.7
VCC	Top	TP	B&W 17×17	0.4681	17b	5.5	45	2.7
VCC	Inlet	BPRA	WE 14×14	0.4144	14b	5.0	45	2.7
VCC	Outlet	TP	B&W 17×17	0.4681	17b	5.5	45	2.7

[a] Refers to general core configuration on which assembly hybrid was based (e.g., Westinghouse 14×14, CE 16×16).
[b] Indicates identifier for fuel characteristics documented in Section 5.A.2.
[c] Maximum fuel assembly average burnup limited to 45 GWd/MTU.

THIS PAGE INTENTIONALLY LEFT BLANK

5.A.2 Source Specification

To generate radiation and thermal source terms, PWR fuel assembly types are surveyed and grouped by primary characteristics critical to shielding and source term evaluations. Critical criteria are the basic reactor type in which the fuel assembly operated, fuel mass (MTU) and hardware mass. For each assembly group, a hybrid assembly is generated. The hybrid assembly contains the maximum fuel mass and hardware masses of any assembly within the group. This combination leads to a conservative source term in each Canister. The critical characteristics are listed in Table 5.A.2-1. Fuel assembly hardware quantities for nonzirconium-based hardware are included in Section 5.A.7. This hardware may contribute significantly to cask surface dose rates as a result of ^{59}Co activation. Refer to Section 5.A.7 for the geometry aspects and hardware quantities of the evaluated fuel assembly hybrids.

The SAS2H code sequence of the SCALE 5.1 package with the 44-group ENDF/B-V cross-section libraries is used to generate source terms for the shielding analysis. SAS2H includes an XSDRNPM neutronics model of the fuel assembly and the ORIGEN-S code for fuel depletion and source term calculations. Source terms are generated for both UO_2 fuel and fuel assembly hardware.

The 44-group library (44GROUPNDF5) is composed primarily of ENDF/B-V cross-sections with ENDF/B-VI data for a limited number of isotopes (e.g., ^{154}Eu and ^{155}Eu). The cross-section set is collapsed using an LWR spectrum. References 31 through 35 contain extensive SAS2H validation for burnups up to 47 GWd/MTU.

Source terms are generated on an assembly average burnup basis using SAS2H and are adjusted to reflect the burnup profile as discussed in Section 5.A.3 and Section 5.A.4.

The hardware activation is calculated by light element transmutation using the in-core neutron flux spectrum produced by the SAS2H neutronics model. The effects of axial flux spectrum and magnitude variation on hardware activation are estimated by flux ratios determined from empirical data. Refer to Section 5.A.7 for the in-core reactor primary system properties required for burnup calculations. Refer to Section 5.A.7.6 for a sample SAS2H input file.

Rather than determining a single cool time, assembly average burnup, and initial enrichment combination acceptable for all payloads, source terms are produced in the following range.

- Assembly average burnup from 10,000 MWd/MTU to 45,000 MWd/MTU
- Assembly average initial enrichment 1.3 wt % ^{235}U to 4.9 wt % ^{235}U
- Cool time from 5 years to 40 years

5.A.2.1 Gamma Source

The gamma source term of the spent nuclear fuel assembly is composed of a fuel gamma source, fission product and actinide sources, and a light element activation source primarily associated with fuel hardware. Spectra are initially produced in the default 18-group energy spectrum of ORIGEN-S at reactor shutdown. The source is then decayed and rebinned into the 22-energy group gamma structure shown in Table 5.A.2-2. The 22-group structure shown is the default MCBEND structure and provides improved binning at the ^{60}Co energy lines. Source generation and rebin are accomplished in the same computer run using the SCALE 5.1 stacked input file structure.

The light element gamma spectra contain contributions primarily from ^{60}Co due to the activation of stainless steel or inconel hardware components. Hardware activation is based on an assembly average nonzirconium alloy structural material ^{59}Co level of 0.8 g/kg. Minor dose contributions result from the hardware ^{59}Ni and ^{58}Fe activation and activation of the zirconium alloy clad impurities. The nonzirconium alloy hardware gamma spectral distribution is determined by the irradiation of 1 kg of material (modeled as stainless steel) in the in-core flux spectrum produced by the SAS2H neutronics calculation. Activated fuel assembly hardware source term magnitudes are determined by multiplying the source strength from the 1 kg SAS2H run by the total mass of nonzirconium in the active fuel, plenum and end-fitting regions, and then multiplying this result by a regional flux activation ratio. This regional flux ratio accounts for the effects of both magnitude and spectrum variation on hardware activation. The following table provides the flux ratios for the various source regions.

Region	Generic PWR	CE16×16 PWR	B&W PWR
Upper-End Fitting	0.10	0.05	0.10
Upper Plenum	0.20	0.20	0.20
Fuel	1.00	1.00	1.00
Lower Plenum	N/A	N/A	0.20
Lower-End Fitting	0.20	0.20	0.10

Additional gamma source is produced by nonfuel hardware included in the system evaluation. Included nonfuel hardware components are control element assemblies (CEAs), reactor control component assemblies (RCCAs), burnable poison rod assemblies (BPRAs), and thimble plugs (also referred to as guide tube plugs or flow mixers). Table 5.A.2-3 contains the activated nonfuel hardware mass by core type for BPRAs and thimble plugs. Combustion Engineering (CE) cores employ integral absorber rods that replace some fuel rods. Assuming all lattice locations are filled with fuel rods bounds the in-lattice absorber rods. Refer to Sections 5.A.7.4 and 5.A.7.5 for more information on the nonfuel components.

Source term calculations are based on a maximum three-cycle exposure for 5-year decayed BPRAs and a multicycle exposure equivalent to 180 GWd/MTU burnup for thimble plugs, 5-year decayed, and CEAs, 10-year decayed. Activation of the nonfuel hardware is treated identically to that of the fuel assembly hardware, including the use of flux factors to account for the location of the activated material in relation to the full (100%) in-core flux employed in the SAS2H depletion calculations.

5.A.2.2 Neutron Source

Light water reactor spent fuel neutron sources result from actinide spontaneous fission and from (α,n) reactions. The isotopes ^{242}Cm and ^{244}Cm characteristically produce all but a few percent of the spontaneous fission neutrons and (α,n) source. The next largest contribution is from (α,n) reactions in ^{238}Pu. The neutron spectra for each emission type are included in the ORIGEN-S nuclear data libraries of the SCALE 5.1 code package. Similar to the gamma spectrum, the neutron energy spectrum is decayed and rebinned into the MCBEND default neutron structure using ORIGEN-S. The MCBEND neutron spectrum is listed in Table 5.A.2-4.

The MCBEND neutron energy spectrum is employed for consistency with the MCBEND gamma spectrum chosen for its enhanced grouping around the ^{60}Co energy lines. All shielding evaluations are performed with MCNP.

Neutron shielding evaluations for fissile material must account for subcritical multiplication (neutron production) inside the system being evaluated. This subcritical multiplication is taken into account by a scale factor applied to the dose results. While MCNP contains the option to directly account for the subcritical neutron multiplication, the homogenization of the fuel assembly and application of the weight window acceleration method could result in inefficient and possibly erroneous results. Code biasing is set to optimize the speed at which cask surface dose rates are obtained. Thermal energy neutrons within the fuel region are not likely to escape the shielded storage system and tend to be biased out of the evaluation. However, the thermal

neutrons account for a significant portion of the subcritical multiplication. Removing the thermal neutrons from the system by biasing for cask surface dose, therefore, has the potential to bias the subcritical neutron multiplication. To account for subcritical multiplication, the neutron source rates are scaled by a subcritical multiplication factor based on the system multiplication factor, k_{eff}:

$$\text{Scale Factor} = \frac{1}{1 - k_{eff}}$$

For dry cask conditions, the system k_{eff} is taken as 0.4, with a resulting scale factor of 1.67. The fresh fuel dry cask system reactivity is calculated below 0.4 in Chapter 6.

Discussion on wet cask system shielding analysis is included in Section 5.A.7.8.

5.A.2.3 Bounding Gamma and Neutron Spectrum

The shielding evaluations are performed using a response function approach (see Sections 5.A.6 and 5.A.7). Allowable cool time, initial enrichment and maximum assembly average burnup are provided for a range of fuel assembly designs. Fuel assembly source spectra for the cases (fuel type, initial enrichment, burnup and cool time) producing the maximum radial transfer and storage cask dose rates are shown in Table 5.A.2-5 for the gamma source and in Table 5.A.2-6 for the neutron source. Fuel gamma sources in the tables are expressed on a per-assembly basis, while the hardware (nonzirconium alloy) source is expressed on a per-kilogram basis.

Table 5.A.2-1 Key Fuel Assembly Characteristics

Fuel Type	**CE**	**WE**	**WE**	**B&W**	**Palisades**	**CE**	**WE**	**B&W**
Label	14a	14b	15a	15b	15c	16a	17a	17b
Array	14×14	14×14	15×15	15×15	15×15	16×16	17×17	17×17
Nominal Number of Fuel Rods	176	179	204	208	216	236	264	264
Fuel Mass [MTU]	0.4115	0.4144	0.4671	0.4807	0.4385	0.4463	0.4671	0.4681

Table 5.A.2-2 22-Group Gamma Energy Spectrum

Group	E Lower [MeV]	E Upper [MeV]	E Average [MeV]
1	1.20E+01	1.40E+01	1.30E+01
2	1.00E+01	1.20E+01	1.10E+01
3	8.00E+00	1.00E+01	9.00E+00
4	6.50E+00	8.00E+00	7.25E+00
5	5.00E+00	6.50E+00	5.75E+00
6	4.00E+00	5.00E+00	4.50E+00
7	3.00E+00	4.00E+00	3.50E+00
8	2.50E+00	3.00E+00	2.75E+00
9	2.00E+00	2.50E+00	2.25E+00
10	1.66E+00	2.00E+00	1.83E+00
11	1.44E+00	1.66E+00	1.55E+00
12	1.22E+00	1.44E+00	1.33E+00
13	1.00E+00	1.22E+00	1.11E+00
14	8.00E-01	1.00E+00	9.00E-01
15	6.00E-01	8.00E-01	7.00E-01
16	4.00E-01	6.00E-01	5.00E-01
17	3.00E-01	4.00E-01	3.50E-01
18	2.00E-01	3.00E-01	2.50E-01
19	1.00E-01	2.00E-01	1.50E-01
20	5.00E-02	1.00E-01	7.50E-02
21	2.00E-02	5.00E-02	3.50E-02
22	1.00E-02	2.00E-02	1.50E-02

Table 5.A.2-3 Bounding Regional Nonfuel Hardware Masses

Assembly	Component	Regional Masses [kg]		
		Upper Nozzle	Upper Plenum	Active Fuel
Westinghouse 14×14	Thimble Plug	2.12	2.18	0
	BPRA	2.41	2.07	9.22
Westinghouse 15×15	Thimble Plug	2.19	2.72	0
	BPRA	2.47	2.18	11.39
Westinghouse 17×17	Thimble Plug	2.73	3.16	0
	BPRA	3.04	2.85	10.995
B&W 15×15	Thimble Plug	3.641	3.41	0
	BPRA	3.602	0	0
B&W 17×17	Thimble Plug	3.641	3.41	0
	BPRA	3.602	0	0

Table 5.A.2-4 28-Group Neutron Energy Spectrum

Group	E Lower [MeV]	E Upper [MeV]	E Average [MeV]
1	1.360E+01	1.460E+01	1.410E+01
2	1.250E+01	1.360E+01	1.305E+01
3	1.125E+01	1.250E+01	1.188E+01
4	1.000E+01	1.125E+01	1.063E+01
5	8.250E+00	1.000E+01	9.125E+00
6	7.000E+00	8.250E+00	7.625E+00
7	6.070E+00	7.000E+00	6.535E+00
8	4.720E+00	6.070E+00	5.395E+00
9	3.680E+00	4.720E+00	4.200E+00
10	2.870E+00	3.680E+00	3.275E+00
11	1.740E+00	2.870E+00	2.305E+00
12	6.400E-01	1.740E+00	1.190E+00
13	3.900E-01	6.400E-01	5.150E-01
14	1.100E-01	3.900E-01	2.500E-01
15	6.740E-02	1.100E-01	8.870E-02
16	2.480E-02	6.740E-02	4.610E-02
17	9.120E-03	2.480E-02	1.696E-02
18	2.950E-03	9.120E-03	6.035E-03
19	9.610E-04	2.950E-03	1.956E-03
20	3.540E-04	9.610E-04	6.575E-04
21	1.660E-04	3.540E-04	2.600E-04
22	4.810E-05	1.660E-04	1.071E-04
23	1.600E-05	4.810E-05	3.205E-05
24	4.000E-06	1.600E-05	1.000E-05
25	1.500E-06	4.000E-06	2.750E-06
26	5.500E-07	1.500E-06	1.025E-06
27	7.090E-08	5.500E-07	3.105E-07
28	1.000E-11	7.090E-08	3.546E-08

Table 5.A.2-5 Gamma Source Spectrum – Maximum Radial Dose Rate Configuration

Cask	Storage		Transfer	
Fuel Type **Burnup[a]** **Cool Time** **Initial Enrichment**	**Westinghouse 14×14** **45 GWd/MTU** **5.0 years** **2.7 wt % ^{235}U**		**Westinghouse 15×15** **45 GWd/MTU** **5.4 years** **2.7 wt % ^{235}U**	
Group	**[γ/sec/assy]**	**[γ/sec/kg]**	**[γ/sec/assy]**	**[γ/sec/kg]**
1	0.0000E+00	0.0000E+00	0.0000E+00	0.0000E+00
2	1.7450E+04	0.0000E+00	1.8780E+04	0.0000E+00
3	3.3740E+05	0.0000E+00	3.6330E+05	0.0000E+00
4	1.5890E+06	0.0000E+00	1.7110E+06	0.0000E+00
5	8.1010E+06	0.0000E+00	8.7220E+06	0.0000E+00
6	2.0180E+07	0.0000E+00	2.1730E+07	0.0000E+00
7	8.0928E+09	9.4930E-12	7.1854E+09	9.0830E-12
8	8.6707E+10	3.9180E+04	7.6821E+10	3.8270E+04
9	1.9891E+12	4.5860E+07	1.6861E+12	4.4790E+07
10	1.1662E+12	2.1840E+02	1.0462E+12	5.1020E+01
11	5.8890E+12	1.2090E+01	5.7300E+12	1.1810E+01
12	5.9120E+13	4.3090E+12	5.9730E+13	4.2080E+12
13	4.7050E+13	4.5420E+12	4.6150E+13	4.4360E+12
14	3.4000E+14	4.9250E+10	3.3720E+14	3.5840E+10
15	2.3551E+15	8.8480E+06	2.5322E+15	8.6960E+06
16	7.8427E+14	2.4050E+07	7.6962E+14	2.3540E+07
17	5.8950E+13	3.6580E+08	5.9481E+13	3.5730E+08
18	8.4916E+13	2.7960E+08	8.6379E+13	2.7310E+08
19	2.9803E+14	5.6600E+09	3.0152E+14	5.5270E+09
20	3.6471E+14	2.3310E+10	3.7591E+14	2.2770E+10
21	8.4160E+14	6.6580E+10	8.7816E+14	6.5040E+10
22	6.1302E+14	7.9240E+10	6.3868E+14	7.7430E+10
Total	5.8563E+15	9.0750E+12	6.0938E+15	8.8510E+12

[a] Assembly average.

Table 5.A.2-6 Neutron Source Spectrum – Maximum Radial Dose Rate Configuration

Cask	Storage	Transfer
Fuel Type **Burnup[a]** **Cool Time** **Initial Enrichment**	**Westinghouse 14×14** **45 GWd/MTU** **5.0 years** **2.7 wt % ^{235}U**	**Westinghouse 15×15** **45 GWd/MTU** **5.4 years** **2.7 wt % ^{235}U**
Group	**[n/sec/assy]**	**[n/sec/assy]**
1	1.988E+04	2.139E+04
2	5.345E+04	5.752E+04
3	1.634E+05	1.758E+05
4	4.547E+05	4.894E+05
5	2.190E+06	2.357E+06
6	4.804E+06	5.171E+06
7	7.915E+06	8.520E+06
8	2.631E+07	2.832E+07
9	4.473E+07	4.815E+07
10	6.147E+07	6.616E+07
11	1.417E+08	1.525E+08
12	1.979E+08	2.130E+08
13	4.470E+07	4.811E+07
14	3.965E+07	4.267E+07
15	3.978E+06	4.280E+06
16	2.909E+06	3.130E+06
17	6.591E+05	7.093E+05
18	1.552E+05	1.670E+05
19	2.853E+04	3.070E+04
20	5.062E+03	5.447E+03
21	9.901E+02	1.065E+03
22	3.954E+02	4.255E+02
23	5.905E+01	6.354E+01
24	1.222E+01	1.315E+01
25	1.345E+00	1.447E+00
26	3.121E-01	3.358E-01
27	8.506E-02	9.152E-02
28	4.186E-03	4.501E-03
Total	5.798E+08	6.240E+08

[a] Assembly average

5.A.3 Axial Burnup Profile

The axial burnup profile changes as fuel burnup progresses from initial in-core loading (0 GWd/MTU) to the maximum burnup requested (45 GWd/MTU). For PWR fuel assemblies, maximum burnup peaking occurs in the range of 10 to 15 GWd/MTU with a peak of approximately 1.25. The burnup profile peak then decreases as burnup increases to the 30 GWd/MTU range, after which the peak remains relatively constant. Dose calculations on both transfer and storage systems, summarized in Section 5.A.1, demonstrate that, at a fixed burnup profile, fuel assemblies burned in excess of 30 GWd/MTU produce maximum dose rates. For a fixed burnup profile, Figure 5.A.3-2 (storage cask) and Figure 5.A.3-3 (transfer cask) illustrate the dose rate increase as a function of burnup that offsets any potential increase in burnup peak at lower burnup levels.

Figure 5.A.3-4 contains YAEC compiled PWR burnup profiles at 5 GWd/MTU increments showing low burnup fuel having a higher peak. Peaking is less than 10% higher for the low burnup material, which is a smaller increase than the dose decreases plotted in Figure 5.A.3-2 and Figure 5.A.3-3 for the lower burnup fuels. The following discussion, therefore, describes the burnup profile for fuel burned in excess of 30 GWd/MTU. The 30 GWd/MTU derived profile is applied in the shielding evaluations summarized in Sections 5.A.1 and 5.A.6 and detailed in Section 5.A.7.

Fuel burned in excess of 30 GWd/MTU produces the maximum dose rates as shown in Section 5.A.6. An enveloping axial burnup profile with a 1.11 uniform peaking factor is justified on the basis of calculated data from Seabrook Station and Maine Yankee and from measured Turkey Point gamma data. This normalized enveloping shape is shown in Figure 5.A.3-1.

Fuel assemblies may contain axial unenriched end regions (blankets). Information that constructed the burnup profile curve did not contain blanketed fuel. To demonstrate acceptability of the profile to blanketed fuel, NAC compared the profile in Figure 5.A.3-1 to the YAEC-1937 profile for assemblies in the range of 30 to 35 GWd/MTU. The YAEC profile includes both blanketed and nonblanketed fuel assemblies. As seen in Figure 5.A.3-4, the profiles match well, demonstrating acceptability of the chosen profile across the range of fuel assembly types.

The use of axial blankets in the fuel assembly has the potential for affecting overall source magnitudes, as sources vary as a function of enrichment at a fixed burnup (thus leading to higher sources at lower enrichment). Axial blankets may also shift the burnup profile and indirectly

modify source magnitudes. End blanket effects on source magnitudes, in particular unenriched blankets, are discussed in Section 5.A.7 and demonstrated to be not significant to system performance.

The profiles applied in the shielding evaluations are designed to produce bounding dose rates when used in conjunction with the evaluation methods and inputs described in this chapter. Individual sites may utilize unique axial enrichment loadings, or have nonstandard operating conditions (e.g., a reactor running with substantial control rod insertion for a significant portion of the assembly operating history) that could produce significant variations in burnup profile. Burnup profile shape should be considered during ALARA and site boundary planning by the system licensee, as it may affect system dose rate profiles.

Figure 5.A.3-1 Enveloping Axial Burnup Profile

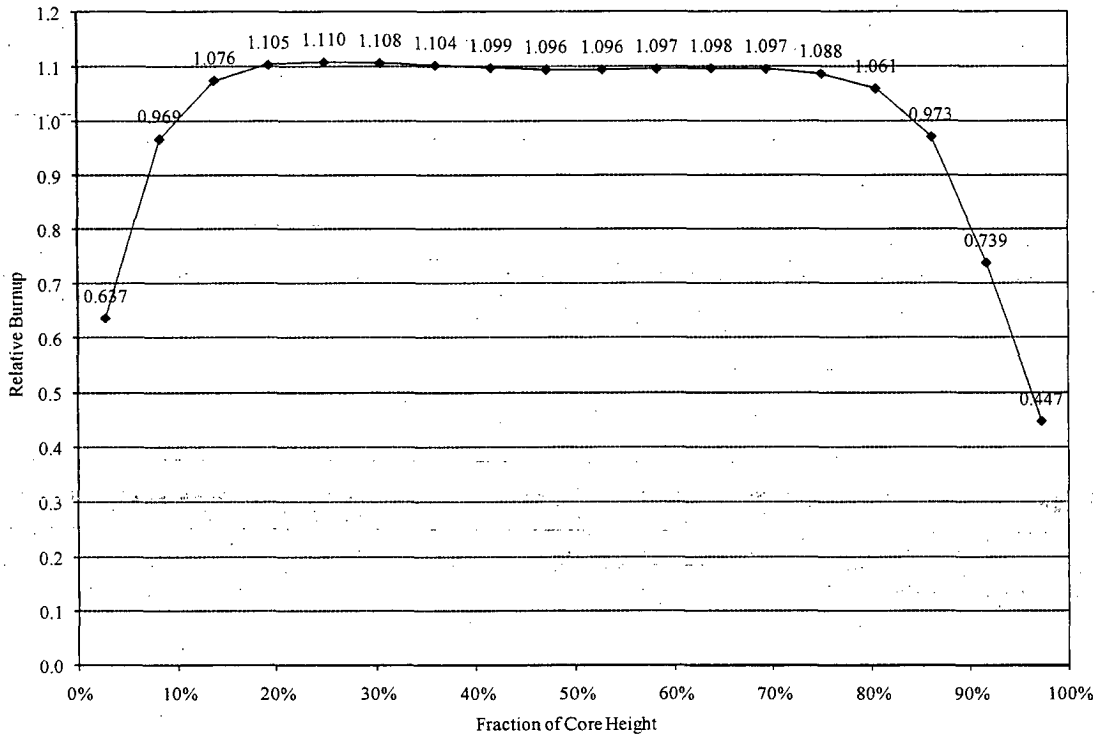

Figure 5.A.3-2 Storage Cask Dose Rates as a Function of Burnup

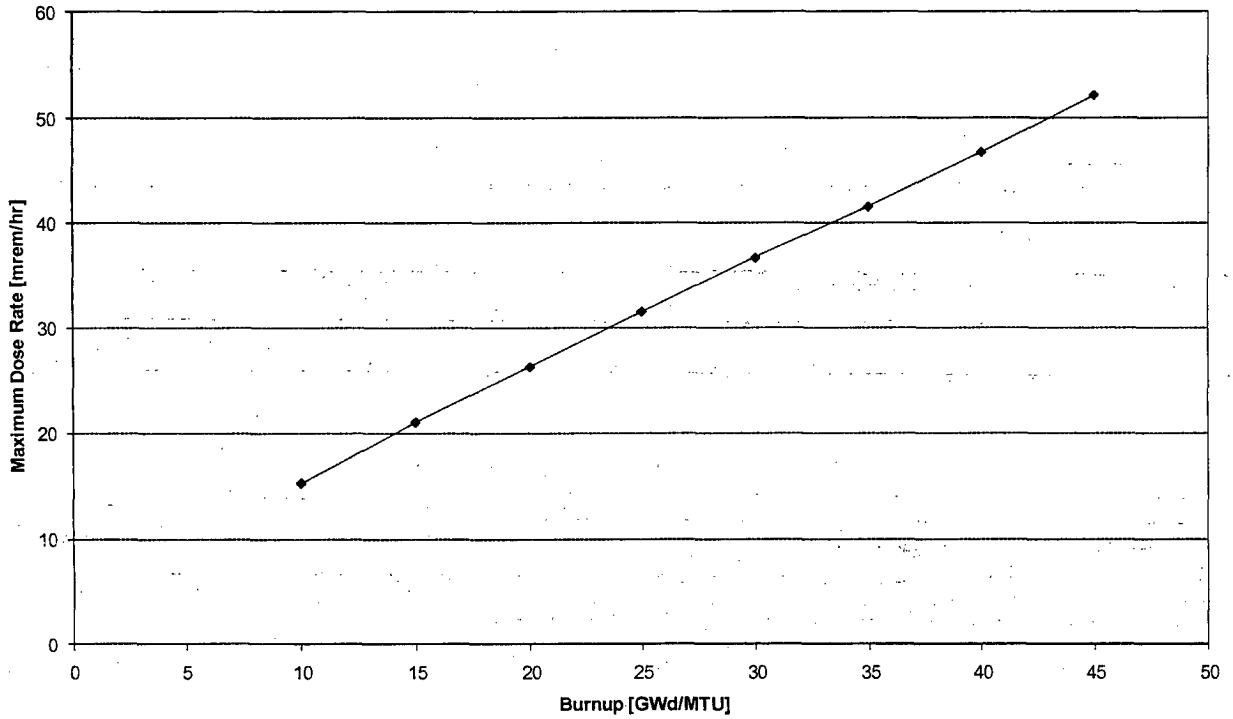

Figure 5.A.3-3 Transfer Cask Dose Rates as a Function of Burnup

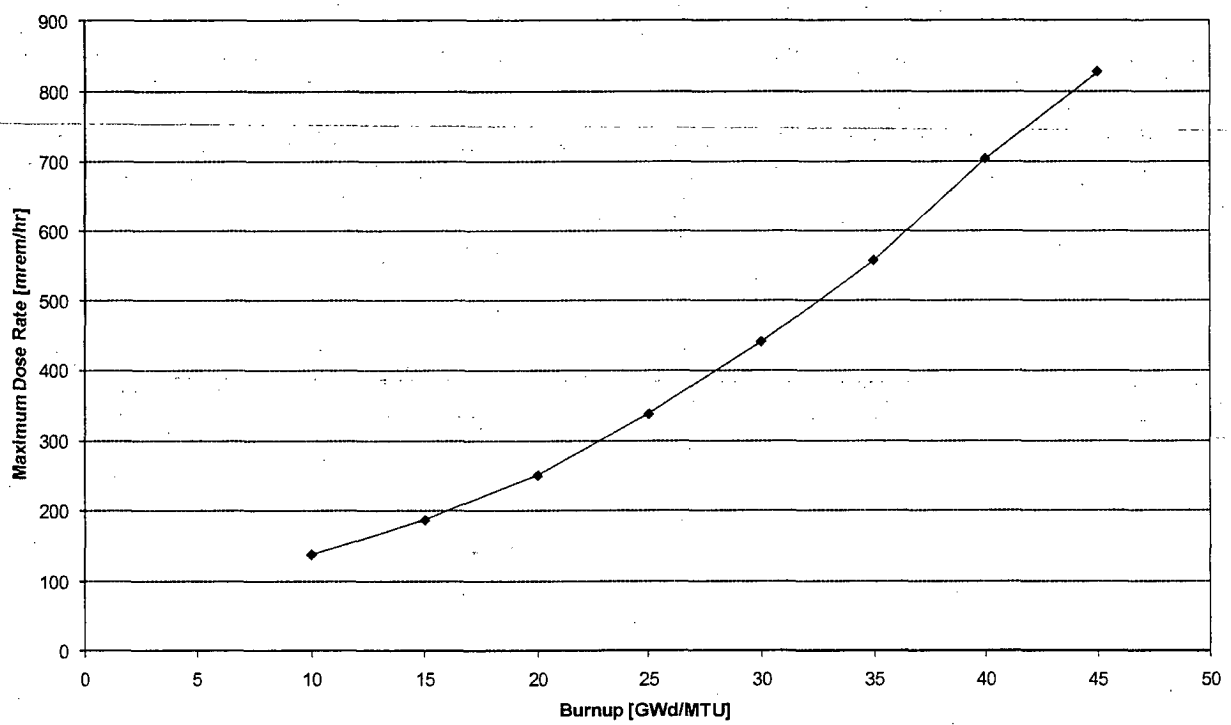

Figure 5.A.3-4 Normalized Burnup Profiles from YAEC-1937 (Grouped in 5 GWd/MTU Bins)

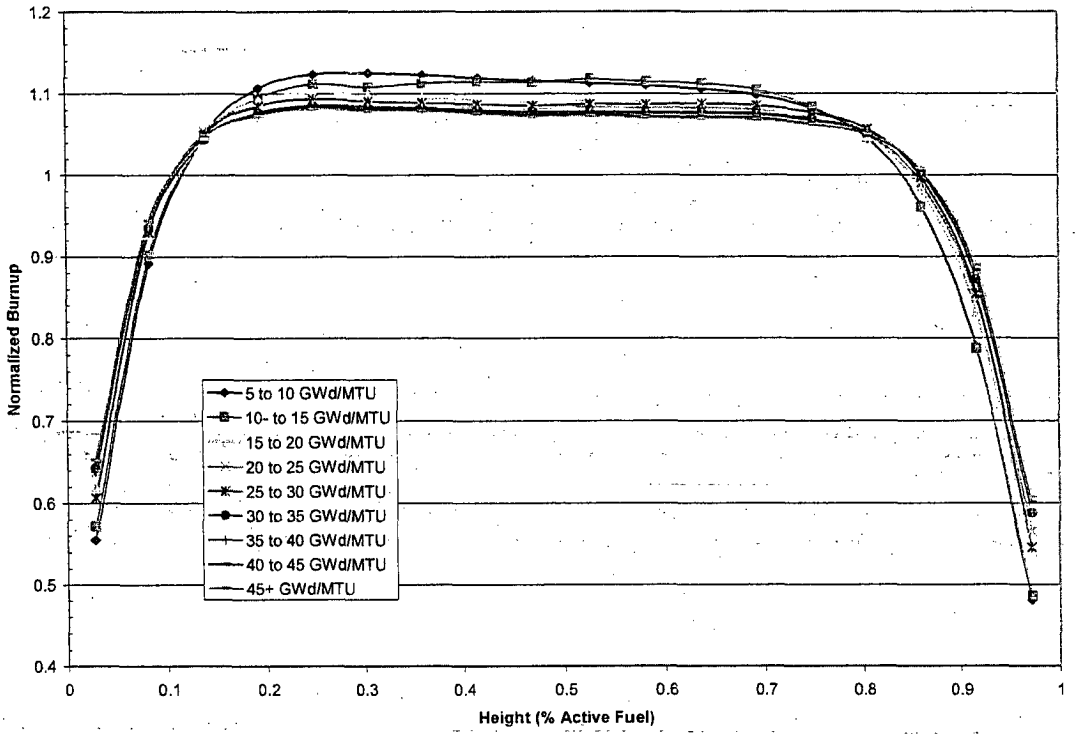

THIS PAGE INTENTIONALLY LEFT BLANK

5.A.4 Axial Source Profile

Neutron and gamma source rates are related to burnup by $S \sim aB^b$, where "S" is the source rate for a particular radiation type, "B" is the burnup at a given axial elevation, and the "b" factor is set by curve fitting of SAS2H produced source magnitudes. Based on the SAS2H results, the "b" factor is 1.0 for gamma (photons) and 4.22 for neutrons. The variable "a", while included in the source magnitude to burnup correlation, is not required in the analysis as the variable drops out of the equation when establishing source ratios and determining the variable "b".

$$S = aB^b$$

Given two burnups, B_1 and B_2 and a Source Strength S_1, solve for S_2

$$S_1 = aB_1^{\ b} \text{ and } S_2 = aB_2^{\ b}$$

yields

$$a = \frac{S_2}{B_2^{\ b}} \text{ substituting } \frac{S_1}{B_1^{\ b}} = \frac{S_2}{B_2^{\ b}} \text{ solving for } S_2 \rightarrow S_2 = \frac{B_2^{\ b}}{B_1^{\ b}} \times S_1$$

As the "b" factor is unity (1.0) for gamma and greater than 1 for neutron, the axially integrated source of an assembly is, therefore, equal to that of the assembly at average burnup for gamma but not for neutrons. The fuel neutron and fuel gamma source rate profiles are shown in Figure 5.A.4-1.

Two scaling quantities are of interest. First, since SAS2H analyses are conducted at the average assembly burnup, a scale factor is required to relate the assembly average source rate to the source rate at the average burnup:

$$r = \frac{\overline{S}}{S(\overline{B})} = \frac{\frac{a}{H}\int B^b dz}{a\overline{B}^b}$$ (Note: variable "a" drops out of the equation)

where H is the height of the fuel region. With the burnup profile normalized to one, this becomes

$$r = \frac{1}{H}\int B^b dz$$

The integral is evaluated numerically using the trapezoid rule, and the resulting scale factors are shown in Table 5.A.4-1. The second scaling parameter is the ratio of the peak to average source rate.

$$s = \frac{S(B_{max})}{\overline{S}}$$

This parameter is also shown in Table 5.A.4-1 as 1.184.

The dose response function method multiplies the SAS2H-generated assembly source at average burnup by the corresponding dose response (mrem/hr/particle). The MCNP dose response runs, therefore, must include a tally multiplier (TM) to adjust for the complete basket source. The TM is based on the number of fuel assemblies in the basket and, for neutron cases, the subcritical neutron multiplication adjustment and the correction for source at average burnup to integrated source (e.g., neutron source TM=41.4=21*1.184*1.667).

Figure 5.A.4-1 Gamma and Neutron Axial Source Profiles

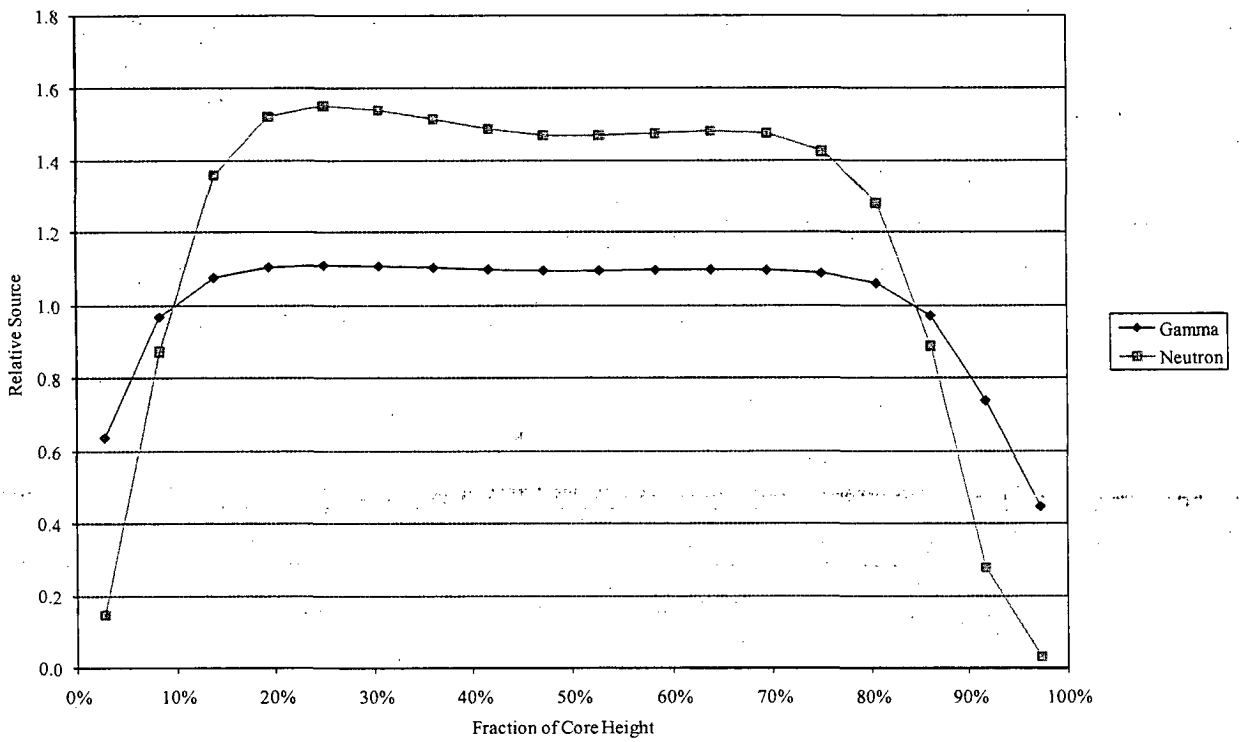

Table 5.A.4-1 Axial Source Profile Integration

Core Height	Gamma Source	Neutron Source
0.00% to 5.56%	0.637	0.149
5.56% to 11.11%	0.969	0.875
11.11% to 16.67%	1.076	1.362
16.67% to 22.22%	1.105	1.524
22.22% to 27.78%	1.110	1.553
27.78% to 33.33%	1.108	1.542
33.33% to 38.89%	1.104	1.518
38.89% to 44.44%	1.099	1.489
44.44% to 50.00%	1.096	1.472
50.00% to 55.56%	1.096	1.472
55.56% to 61.11%	1.097	1.478
61.11% to 66.67%	1.098	1.484
66.67% to 72.22%	1.097	1.478
72.22% to 77.78%	1.088	1.427
77.78% to 83.33%	1.061	1.283
83.33% to 88.89%	0.973	0.890
88.89% to 94.44%	0.739	0.280
94.44% to 100.00%	0.447	0.034
Average	1.000	1.184

5.A.5 Model Specification

The transfer and concrete casks are evaluated using the MCNP three-dimensional Monte Carlo code. In the MCNP fuel assembly model, the fuel and hardware source regions are homogenized within a volume defined by the fuel assembly width and height. This volume is subdivided axially into active fuel, upper and lower plenum, and upper and lower end-fitting source regions. Within these axial volumes, the material masses of the fuel assembly are homogenized. In all models, the cask and Canister shield thicknesses and axial extents are explicitly represented, including streaming paths. Surface detectors are used to estimate the dose profiles at the cask surface and at distances of 1ft, 1m, 2m, and 4m from the cask surface. The MCNP code employs an automated biasing technique for the Monte Carlo calculation based on weight window adjustments in mesh cells. Radial biasing is performed to estimate dose rates at the transfer cask radial surface and concrete cask radial surface, including air inlets and outlets. Axial biasing is used for cask top and bottom surface rates. Angular biasing components are used to capture azimuthal variations in bulk shielding properties. Primary examples of azimuthal variations within bulk shields are the Concrete Cask air inlets and outlets and the vent/drain port location in the Canister closure lid.

The geometric description of an MCNP model is based on the combinatorial geometry system embedded in the code. In this system, surfaces and bodies such as cylinders and rectangular parallelepipeds, and their logical intersections and unions, are used to describe the extent of material zones.

NAC-CASC, a modified version of SKYSHINE-III, uses the MCNP-generated cask surface current to estimate site boundary exposures. NAC-CASC allows for self-shielding of casks and permits input of an angular surface current emission spectrum. In the NAC-CASC evaluations, the concrete casks are modeled as "black body" cylinders. Given the concrete cask thickness, radiation emitted from one cask and impacting an adjacent cask will not significantly impact site boundary dose rates. To verify the acceptability of this assumption, a radial neutron and gamma source MCNP analysis was performed on a 2×10 cask array with the front row assigned either an importance of 1 (same as back row casks) or assigned an importance of 0 (terminating the particle tracking). Results of this analysis are shown in Figure 5.A.5-6 for the short array axis (facing the x direction 2-cask side of the array in Figure 5.A.5-5) and Figure 5.A.5-7 for the long array axis (facing the y direction 10-cask side of the array in Figure 5.A.5-5). While significantly affecting the radial dose contribution from the "shielded" back row of casks along the y-axis, the "black body" assumption does not significantly affect total dose rates in this direction, as the majority of dose is contributed by the front row of casks (i.e., casks facing the

detector). Including the axial contribution in the comparison, which is not affected by the "black body" assumption, would further decrease the relative effect of the "black body" assumption. The energy and angular spectrum of radiation emitted from the cask surface are retained when transitioning from the MCNP to the NAC-CASC model.

5.A.5.1 Description of Radial and Axial Shielding Configurations

The three-dimensional shielding analysis allows detailed modeling of the source and shield regions, including streaming paths. Cask and Canister details include the axial extent of the radiation shields. This section includes system sketches, discussion of the general Canister shell (including closure lid and bottom plate) and features, and detailed information on the Transfer Cask and Concrete Cask shield configurations. Content dependent Canister, basket and fuel specific model details are included in Section 5.A.7.

5.A.5.1.1 MCNP Canister Model

Key Canister shielding features are listed in Table 5.A.5-1. The Canister closure lid, shell and bottom plate are explicitly modeled. Port covers are modeled as open in Transfer Cask evaluations and closed in Concrete Cask evaluations. The Canister elevations with respect to the cask shields are illustrated in the cask shield configuration descriptions.

5.A.5.1.2 MCNP Concrete Cask Model

The three-dimensional model of the Concrete Cask contains the following features:

- heat transfer annulus with standoffs
- bottom weldment, including pedestal, bottom plate and air inlet structure
- radial Concrete Cask body with rebar
- concrete lid
- concrete pad below base plate

Detailed model parameters used in creating the three-dimensional model are taken directly from the relevant drawings. Key shielding features are listed in Table 5.A.5-2. Elevations associated with the Concrete Cask three-dimensional model are established with respect to the bottom plate of the Canister for the global model. Sketches of the three-dimensional Concrete Cask model are shown in Figure 5.A.5-1 and Figure 5.A.5-2.

5.A.5.1.3 MCNP Transfer Cask Model

The Transfer Cask is evaluated in detail for the welding, draining and drying operations. As with the Concrete Cask models, all basket areas, with the exception of the fuel assembly, are discretely modeled. Key Transfer Cask shield features are listed in Table 5.A.5-3. Figure 5.A.5-3 provides a model sketch of the Transfer Cask with Canister.

5.A.5.2 MCNP Detector Mesh Definition

MCNP surface detectors are used to calculate dose rates at various distances from the casks. The surface tallies are subdivided using the FS tally segmentation card. A graphical illustration of the detector overlay on a cask is shown in Figure 5.A.5-4. Depicted are 1ft, 1m, 2m, and 4m detector surfaces on the Concrete Cask. For clarity, the cask surface detector and azimuthal (angular) divisions are not shown. Typical detector grids for the Transfer and Concrete Cask analysis are shown in Table 5.A.5-4 through Table 5.A.5-6. The dose maps produced by this method completely enclose the accessible cask surfaces and capture all locations necessary for the evaluation of occupational exposures.

5.A.5.3 NAC-CASC Model

The site boundary evaluation relies on single cask and 2×10 cask array models. An illustration of the 2×10 cask array is shown in Figure 5.A.5-5. The nominal cask pitch for the array is 15 feet. A conservative 16-ft pitch is evaluated to minimize cask self-shielding.

In each of the models, the Concrete Cask is represented as a cylindrical body onto which detailed surface radiation currents are applied. Cask surface currents are extracted from the 3-D MCNP shielding evaluation of each payload/configuration. The MCNP evaluation also provides the angular distribution of the cask surface current for sampling in the NAC-CASC SKYSHINE code. The cask surface currents are based on the fuel type, assembly average burnup, initial enrichment, and cool time combination that produce the maximum cask radial and axial surface dose rates. The source also accounts for the addition of nonfuel hardware.

Separating the Canister contents evaluation of the cask body from the site air transport exposure evaluation minimizes analysis complexity. All cask gamma source components, including the n-γ production in the cask, are combined into a single gamma source for the skyshine analysis. The model includes a representation of the cask pad, soil surrounding the pad, and an air envelope (air density applied is 0.001225 g/cm^3, which is the density of dry air at 20°C). The air envelope provides both an n-γ source, as well as radiation scatter. Air density of 0.001225 g/cm^3 applied in the analysis formed the basis for the development of the line beam response functions

used in the NAC-CASC (SKYSHINE-III) code. Variations in the air density are permitted within the code input deck, but were not utilized in the dose rate evaluations. Variations in site conditions, including expected atmospheric conditions, should be addressed. Detectors are spaced along the rectangular outline of the ISFSI to a maximum extent of 2,000 ft (610 m) from the center of the array or single cask. NAC-CASC detectors are located at an elevation of 3 ft relative to the bottom of the cask. To obtain a sufficiently detailed dose rate map, dose rate results were evaluated at intervals of 5 ft from 85 ft to 100 ft, and at 25-ft intervals from 100 ft to 2,000 ft. A detector grid spacing of less than 10 meters is sufficient to provide the generic information necessary to determine system array or single cask effects on site boundary dose. The dose rate data plotted in Section 5.A.7 demonstrates a smooth drop-off of dose rate (or yearly dose) that could be fit with a larger detector spacing than that employed in this evaluation.

An ISFSI containing a significant number of casks may be surrounded by a berm or wall structure to reduce offsite doses. The model generated here, conservatively, does not consider any other shielding components with the exception of the other casks on the pad.

5.A.5.4 Offsite Particulate and Gas Release

The Canister is welded closed using controlled welding processes to ensure that the Canister is in a configuration where no credible leakage of the Canister's radionuclide contents can occur. Since the Canister was submerged in the spent fuel pool for loading, a limited amount of surface contamination may be released from the Canister.

A calculation is made to determine dose rate as a function of distance based on residual contamination limits of β-γ and α activity, released from the Canister surface, using the plume dispersion method of Regulatory Guides 1.109 and 1.145.

The χ/Q factor is determined according to the formula from Reg. Guide 1.145.

$$\frac{\chi}{Q} = \frac{1}{U_{10} \cdot \pi \cdot \Sigma_y \cdot \sigma_z}$$

$$\frac{\chi}{Q} = 8.29\text{ E-03 [sec/m}^3\text{] at 100 meters}$$

The releasable activity is determined using:

$$Q[Ci] = \frac{(C)(A)(N)}{(2.22E+12)(100)}$$

where:

2.22E+12= the conversion from curies (Ci) to disintegrations per minute [dpm]
C = the contamination limits
Q = the activity released [Ci]
A = the surface area of the Canister
N = the number of Canisters from which contamination is released

Reg. Guide 1.109 defines the annual dose due to submersion and inhalation. These equations are solved for the amount of activity released in a year, Q [Ci].

Submersion: $D_{submersion} = Q \cdot \frac{\chi}{Q} \cdot DCF_S$

Inhalation: $D_{inhalation} = Q \cdot \frac{\chi}{Q} \cdot BR \cdot DCF_I$

where:

D = dose [rem]
DCF_S = submersion dose conversion factor [rem-m^3/Ci-yr]
DCF_I = inhalation dose conversion factor [rem/Ci]
BR = amount of air breathed annually [8000 m^3]

Refer to Section 5.A.6.5 for the results of this evaluation.

5.A.5.5 Shield Regional Densities

Material densities for the fuel, basket, Canister and cask components modeled are listed in this section. Basket, Canister, and cask components are explicitly modeled. Density and material compositions for structural components are primarily obtained from the standard composition library included with SCALE 5.1. Exceptions to this rule are the density and composition of the neutron shielding material (NS-4-FR) and the density of concrete for the Concrete Cask. The NS-4-FR composition is based on the material specification after curing. Concrete density is set to the minimum permitted. Basket, Canister and cask material densities and compositions are shown in Table 5.A.5-7. Fuel region densities are calculated quantities dependent on the hardware and fuel masses in the assembly. A sample homogenized fuel assembly material description is shown in Table 5.A.5-8.

Figure 5.A.5-1 Concrete Cask Model – Primary Shield Dimensions

Figure Withheld Under 10 CFR 2.390

Figure 5.A.5-2 Concrete Cask Model – Bottom Weldment

Figure Withheld Under 10 CFR 2.390

Dimensions in inches.

Figure 5.A.5-3 Transfer Cask with Canister Model

Figure Withheld Under 10 CFR 2.390

Figure 5.A.5-4 MCNP Detector Grid Locations for Concrete Cask

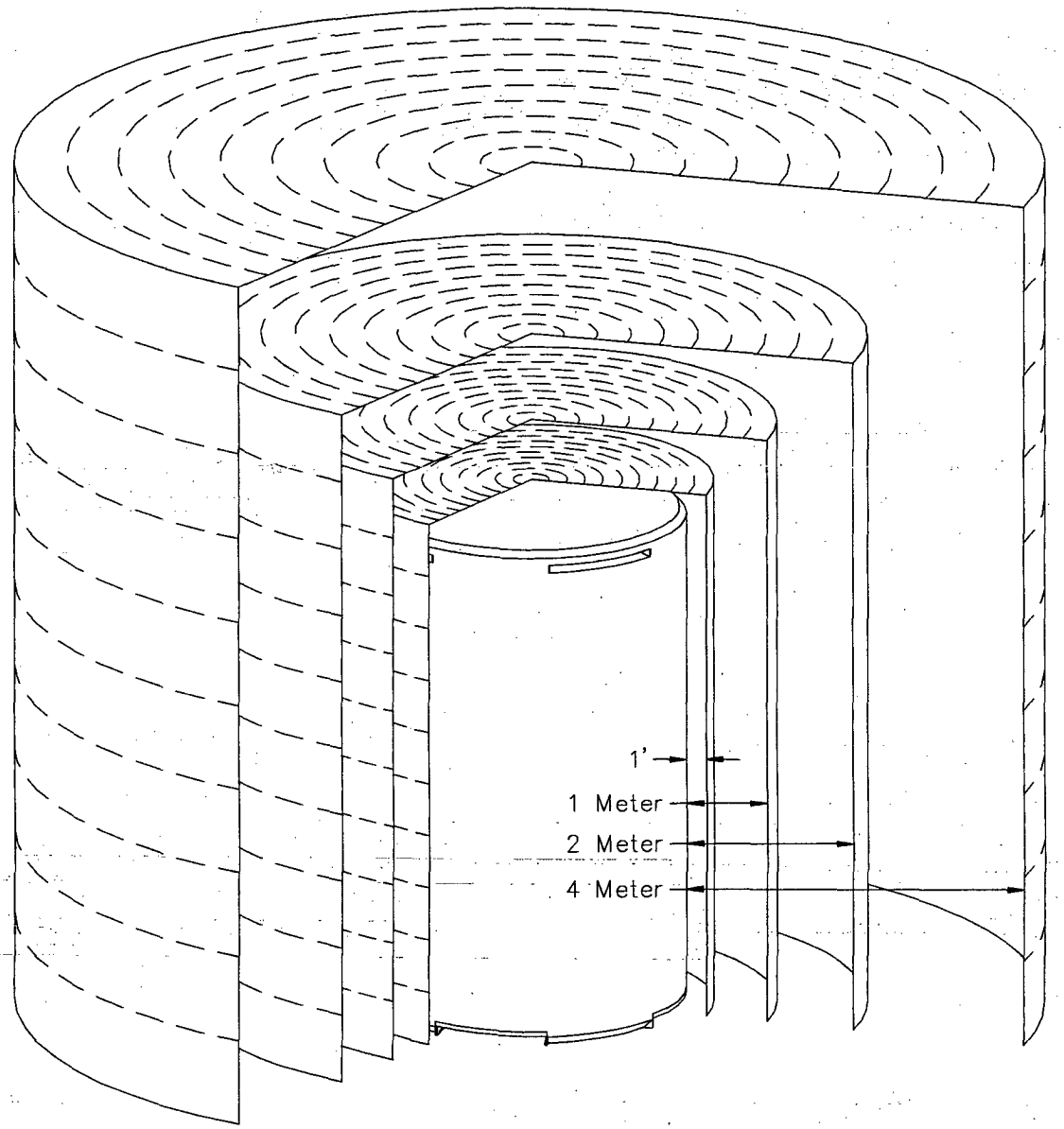

Figure 5.A.5-5 Typical 20-Cask Array (2×10)

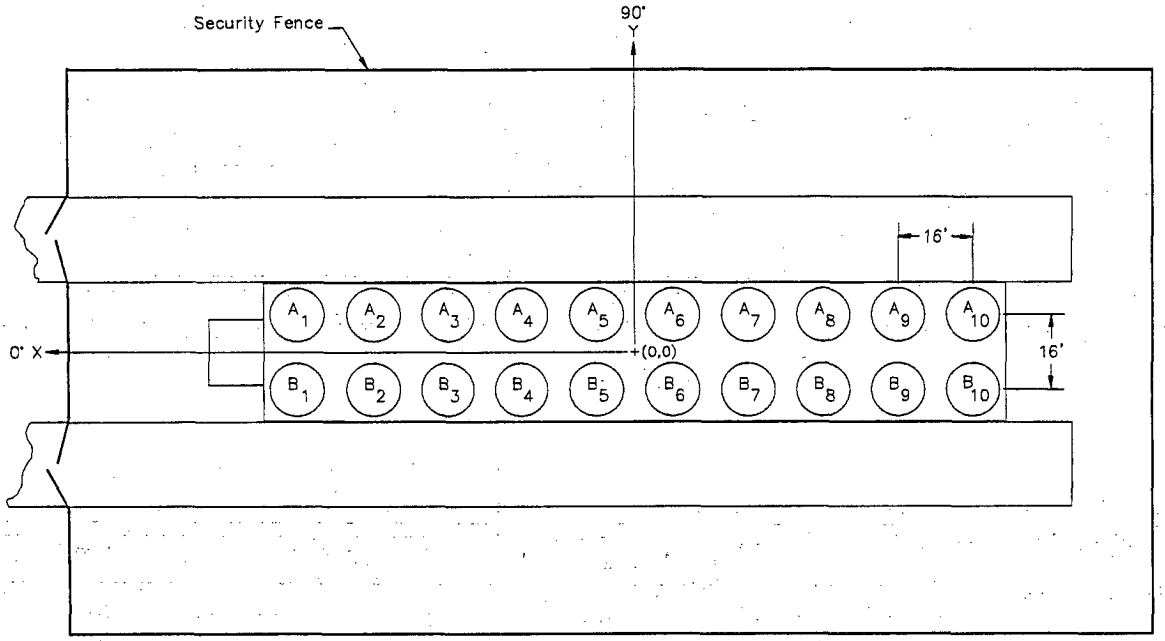

Note: A pitch of 16 ft is conservative when considering array self-shielding.

Figure 5.A.5-6 NAC-CASC "Black Body" Assumption Test along Short (X-Axis) Side of Array

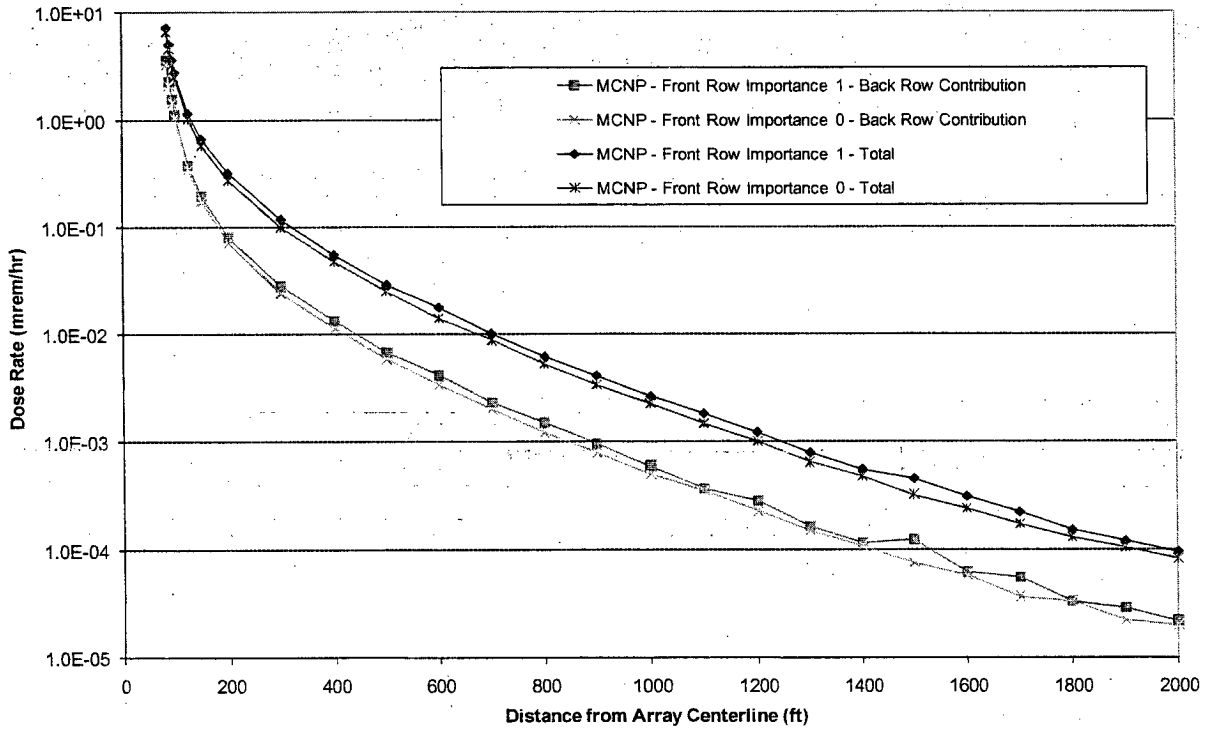

Figure 5.A.5-7 NAC-CASC "Black Body" Assumption Test along Long (Y-Axis) Side of Array

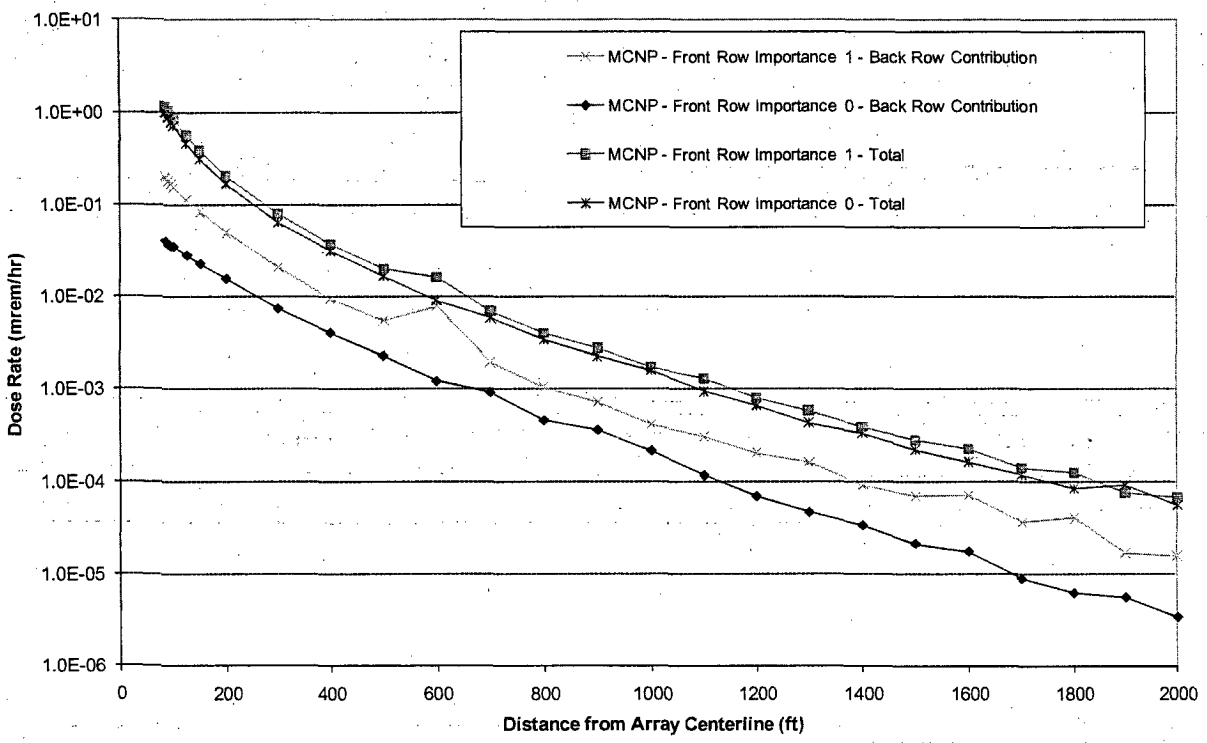

Table 5.A.5-1 Key Canister Shielding Features

Feature	Material	Dimension
Shell	Stainless Steel	0.5-in. thick, 66.5-in. OD
Bottom Plate	Stainless Steel	2-in. thick
Closure Lid	Stainless Steel	8-in. thick

Table 5.A.5-2 Key Concrete Cask Shielding Features

Feature	Material	Dimension
Inner Shell	Carbon Steel	3-in. thick, 80-in. OD
Cask Body Radial Concrete Shell	Concrete	28-in. thick, 136-in. OD
Lid Concrete	Concrete	5.8-in. thick
Lid Steel	Carbon Steel	1.0-in. total thickness
Pedestal Plate	Carbon Steel	2-in. thick, 66.5-in. OD
Cask Bottom Plate	Carbon Steel	1-in. thick
Air Inlet	--	4.5-in. height
Air Outlet	--	4.0-in. height

Table 5.A.5-3 Key Transfer Cask Shielding Features

Feature	Material	Dimension
Inner Shell	Carbon Steel	0.75-in. thick, 69-in. OD
Outer Shell	Carbon Steel	1.25-in. thick, 82.5-in. OD
Top Weldment	Carbon Steel	14-in. height
Bottom Weldment	Carbon Steel	12-in. height
Gamma Shield	Lead	3.125-in. thick
Neutron Shield	NS-4-FR	2.375-in. thick
Door	Carbon Steel	5-in. thick
Foreign Material Exclusion Bar	Carbon Steel	0.75-in. thick

Table 5.A.5-4 Typical Radial Surface Detector Division

Transfer Cask			Concrete Cask		
Location	**Axial Div**	**Azimuthal Div**	**Location**	**Axial Div**	**Azimuthal Div**
Surface	15	1	Surface	12	1
1ft	15	1	1ft	12	1
1m	20	1	1m	15	1
2m	20	1	2m	20	1
4m	20	1	4m	20	1

Table 5.A.5-5 Typical Top Surface Detector Division

Transfer Cask			Storage Cask		
Location	**Radial Div**	**Azimuthal Div**	**Location**	**Radial Div**	**Azimuthal Div**
Surface	12	1	Surface	10	1
1ft	12	1	1ft	10	1
1m	12	1	1m	10	1
2m	12	1	2m	10	1
4m	12	1	4m	10	1
Port Surface[a]	1	64	Air Outlet[b]	1	20

Table 5.A.5-6 Typical Air Inlet and Outlet Detector Division

Location	**Axial Div[c]**	**Azimuthal Div**
Surface	1	20
1ft	1	20
1m	1	20

[a] Radial restricted to radial location of vent and drain ports.
[b] Radial restricted to area above air outlets.
[c] Elevation restricted to air inlet and outlet height.

Table 5.A.5-7 Basket, Canister, and Transfer and Concrete Cask Material Description

Material	Density [g/cm^3]	Nuclide / Element	Density [atom/barn-cm]
Carbon and Low-Alloy Steel	7.8212	CARBON	3.9250E-03
		IRON	8.3494E-02
Stainless Steel	7.94	CHROMIUM	1.7472E-02
		MANGANESE	1.7407E-03
		IRON	5.9505E-02
		NICKEL	7.7392E-03
Lead	11.344	LEAD	3.2967E-02
NS-4-FR	1.6316	HYDROGEN	5.8518E-02
		BORON-10	9.1400E-05
		BORON-11	3.3671E-04
		CARBON	2.2604E-02
		NITROGEN	1.3906E-03
		OXYGEN	2.6112E-02
		ALUMINUM	7.8016E-03
Concrete	2.3234	HYDROGEN	1.3883E-02
		OXYGEN	4.6537E-02
		SODIUM	1.7649E-03
		ALUMINUM	1.7631E-03
		SILICON	1.6789E-02
		CALCIUM	1.5361E-03
		IRON	3.5075E-04
Aluminum	2.70	ALUMINUM	6.0262E-02

Table 5.A.5-8 Sample Fuel Region Homogenized Material Description (17a Assembly)

Material	Density [g/cm^3]	Nuclide / Element	Density [atom/barn-cm]
Lower End-Fitting	1.8782	CHROMIUM	4.1330E-03
		MANGANESE	4.1176E-04
		IRON	1.4076E-02
		NICKEL	1.8307E-03
Lower Plenum	2.6798	CHROMIUM	3.1037E-05
		TIN	2.0391E-04
		IRON	3.6121E-05
		NITROGEN	5.7622E-05
		ZIRCONIUM	1.7376E-02
Active Fuel	3.8195	URANIUM-235	3.5174E-04
		URANIUM-238	6.6998E-03
		ZIRCONIUM	4.2594E-03
		CHROMIUM	7.6082E-06
		TIN	4.9986E-05
		NITROGEN	1.4125E-05
		OXYGEN	1.4110E-02
		IRON	8.8542E-06
Upper Plenum	0.7412	CHROMIUM	1.1716E-03
		TIN	1.5971E-05
		MANGANESE	1.1647E-04
		IRON	3.9846E-03
		NITROGEN	4.5132E-06
		NICKEL	5.1787E-04
		ZIRCONIUM	1.3610E-03
Upper End-Fitting	1.8385	CHROMIUM	4.0457E-03
		MANGANESE	4.0305E-04
		IRON	1.3778E-02
		NICKEL	1.7920E-03

5.A.6 Shielding Calculations

This section evaluates the shielding design of the Concrete and Transfer Casks. The calculation methods, computer codes used and bounding results are described. Dose rate profiles are reported as a function of distance from the sides and top of the Concrete Cask and from the sides, top and bottom of the Transfer Cask.

5.A.6.1 Calculation Methods

5.A.6.1.1 MCNP Calculation Method

The shielding evaluations of the Transfer and Concrete Cask are performed with MCNP5. Source terms include fuel neutron, fuel gamma and gamma contributions from activated hardware. As described in Section 5.A.2, these evaluations include the effect of fuel burnup peaking on fuel neutron and gamma source terms.

The MCNP shielding models described in Section 5.A.5 are used with the source terms described in Section 5.A.2 to estimate the dose rate profiles at the cask surface and at distances of 1ft, 1m, 2m, and 4m. The method of solution is continuous energy Monte Carlo, with a Monte Carlo-based weight window generator to accelerate code convergence. Radial or axial biasing is performed, depending on the desired dose location. Azimuthal components are included in the weight window mesh to account for the angular variations in the bulk shielding properties of the Concrete Cask at the inlets and outlets and at the Canister lid ports (transfer evaluation only).

Significant validation literature is available for MCNP, as it is an industry standard tool for spent fuel cask evaluations. Available literature covers a range of shielding penetration problems ranging from slab geometry to spent fuel cask geometries. Confirmatory calculations against other validated shielding codes (SCALE and MCBEND) on NAC casks have further validated the use of MCNP for shielding evaluations.

MCNP calculations are performed using a response function approach for each source type present in each source region. There are eight source types: encompassing fuel neutron, fuel gamma, fuel n-gamma (secondary gammas arising from neutron interaction in the shield), fuel region hardware, upper and lower plenum, and upper and lower end-fitting gamma sources.

In the response function method, each of the assemblies, and source regions within an assembly, is analyzed with a unit source in each relevant energy group. These sources are analyzed in a finite number of energy groups with a unit source in each group. The scalar product of source

term and response function allows for the creation of large arrays of dose rate results, whether they are for a single detector or the maximum or average over a detector surface. Further detail on the response function approach to generating dose rates is included in Section 5.A.7.

5.A.6.1.2 Site Boundary Dose (NAC-CASC) Calculation Method

Exposure at the controlled area boundary of the ISFSI is limited to 25 mrem/year in accordance with 10 CFR 72.104(a). The NAC version of the SKYSHINE-III code, referred to as NAC-CASC, is used to evaluate the placement of the controlled area boundary for a single cask and a 2×10 array of casks. Given the source geometry, spectra and desired detector locations, NAC-CASC calculates dose rates using a combination of precalculated transmission and reflection data and the Monte Carlo technique to integrate over the source direction and energy variables.

NAC staff modified the FORTRAN source coding of the SKYSHINE-III code to add explicit cask body source and cask array input features, allow the reading and sampling of angular surface current files for cask radial and top surfaces, and correct for self-shielding of casks in the array. Minor output changes were made to collect results in a more compact format than the SKYSHINE default. Code benchmarks were repeated after each modification.

Subroutines were modified to allow the entering and sampling of a cylindrical surface for the cask side wall and disk source for the cask lid. Sampling on the surfaces is based on user defined source dimensions (i.e., in the UNITAD Storage System analysis, the surfaces over which the current was tallied by MCNP). This code modification provides a significant increase in input flexibility versus the typical SKYSHINE input of point sources.

Code modifications also allow for the input of current files from Monte Carlo cask evaluations (such as MCNP tally files) containing the angular distribution of the source. Options exist in the revised coding to use a default angular distribution for the cask surface source, but for the UNITAD evaluation, an explicit Concrete Cask surface profile was used.

NAC-CASC explicitly calculates cask self-shielding based on the cask geometry and arrangement of the cask array. A ray tracing technique is utilized. Given the source position on the cask surface and the direction cosines for the source emission, geometric tests are made to see if any adjacent casks are in the path of the emission. If so, the emission history does not contribute to the air scatter dose. Also, given the source position on the cask surface and the direction cosines for the source to detector location, geometric tests are made to see if any adjacent casks are in the source path. If so, the emission position does not contribute to the uncollided dose at the detector location.

The performance of the NAC-CASC code is validated by modeling a set of Kansas State University ^{60}Co skyshine experiments and by modeling two Kansas State University neutron computational benchmarks. The code compared well with these benchmarks for both neutron and gamma doses versus distance.

5.A.6.2 Flux-to-Dose Rate Conversion Factors

ANSI/ANS 6.1.1-1977 flux-to-dose rate conversion factors are used in all cask shielding evaluations. Neutron and gamma dose conversion factors are listed in Table 5.A.6-1 and Table 5.A.6-2, respectively.

5.A.6.3 Cask Dose Rate and Exposure Results

This section provides bounding dose profiles for the Concrete Cask and the Transfer Cask based on the source terms presented in Section 5.A.2. Fuel source terms include contributions from fuel neutron, fuel gamma and activated hardware gamma. The fuel assembly activated hardware gamma source terms include: steel and inconel in the upper and lower fuel assembly end fittings, upper and lower fuel rod plenum hardware, and activated nonfuel material in the active fuel region. The three-dimensional model dose rates include the effects of axial profiles.

5.A.6.3.1 Concrete Cask Dose Rates

Maximum Concrete Cask radial and top axial normal condition dose rates at the cask surface and distances of 1ft, 1 m, 2 m, and 4 m are shown in Figure 5.A.6-1 and Figure 5.A.6-2. In the axial profile plots, each datum represents the circumferentially averaged dose rate at the corresponding elevation. Figure 5.A.6-3 and Figure 5.A.6-4 contain an azimuthal breakdown of the bounding air outlet and inlet dose rate cases. Refer to Section 5.A.7 for further detail, such as content-specific dose rates and a breakdown in dose by source region.

Concrete Cask top dose rates peak at 286 mrem/hr, with the gamma dose accounting for 98% of the total. Gamma radiation exiting the Concrete Cask top surface has a minimal impact on site boundary exposure.

The missile impact scenario represents the only accident condition significantly affecting the system shielding performance. The conservative removal of 6 inches of concrete from the entire cask body radial surface results in a maximum 1 meter dose rate of 42.6 mrem/hr. This is extremely conservative, as the missile impact is limited to an 8-inch diameter projectile and the

1 meter dose would not be significantly affected by a localized reduction in the Concrete Cask shield.

5.A.6.3.2 Transfer Cask Dose Rates

Bounding Transfer Cask dose rates as a function of distance from the cask are shown in Figure 5.A.6-5, Figure 5.A.6-6 and Figure 5.A.6-7. Dose rate peaks occur on the radial cask surface near the top and bottom weldment locations where activated end-fitting contributions control dose rate. Over the fuel region, the dose shape follows the burnup shape. On the top axial cask surface, dose rates rise in the cask to the Canister annulus area where significant radiation streaming occurs.

5.A.6.4 NAC-CASC Dose Evaluation

Bounding site boundary dose rates from direct radiation for the limiting contents, as a function of distance from the single Concrete Cask and the 2×10 Concrete Cask array, are plotted in Figure 5.A.6-8. Distances are taken along the axis perpendicular to the 10-cask side of the array. Further result details on the evaluations are presented in Section 5.A.7.

5.A.6.5 Surface Contamination Release

Offsite release exposures from particulate contamination are evaluated at a conservative distance of 100 meters and a residual contamination limit of 1000 dpm/100 cm^2 β-γ and 20 dpm/100 cm^2 α.

The selected dose conversion factors are based on using the highest conversion factor for each radiologically significant group of nuclides expected on the Canister surface. ^{60}Co conversion factors are applied to β-γ activity and ^{241}Am factors are applied to the α activity. Dose conversion factors are taken from EPA Federal Guidance Report No. 11, Table 2.1 and Federal Guidance Report No. 12, Table III.1. Both Class Y (oxide) and W compound dose conversion factors were extracted. Class Y (oxide) conversion factors are bounding for the β-γ cobalt release. Only class W conversion factors are available for the ^{241}Am release. The dose conversion factors employed are as follows.

Dose Type	Unit	(^{60}Co)	(^{241}Am)
Submersion – Skin	[rem-m^3/Ci-yr]	1.69E+07	--
Inhalation – Lung	[rem/Ci]	1.28E+06	6.81E+07
Inhalation – Whole Body	[rem/Ci]	2.19E+05	4.44E+08
Inhalation – Bone	[rem/Ci]	--	8.03E+09

The inventory available for release is calculated assuming that 100% of the surface area of each Canister is covered with the contamination levels listed, and applies a conservative release fraction of 1% using the methodology presented in Section 1.2.1 of NUREG-1400. The resulting inventory available for release is conservative, as the release fractions presented in 10 CFR 30.72 are a factor of 10 lower for ^{241}Am (0.001) and ^{60}Co (0.001).

Employing the submersion and inhalation equations from Reg. Guide 1.109, doses are calculated over a range of distances from 100 to 1,000 meters. A dose summary for a distance of 100 m is shown in Table 5.A.6-3. Surface contamination at 1,000 dpm/100 cm^2 β-γ and 20 dpm/100 cm^2 α does not represent a significant exposure contribution at the site boundary.

Figure 5.A.6-1 Concrete Cask Radial Dose Rate Profiles

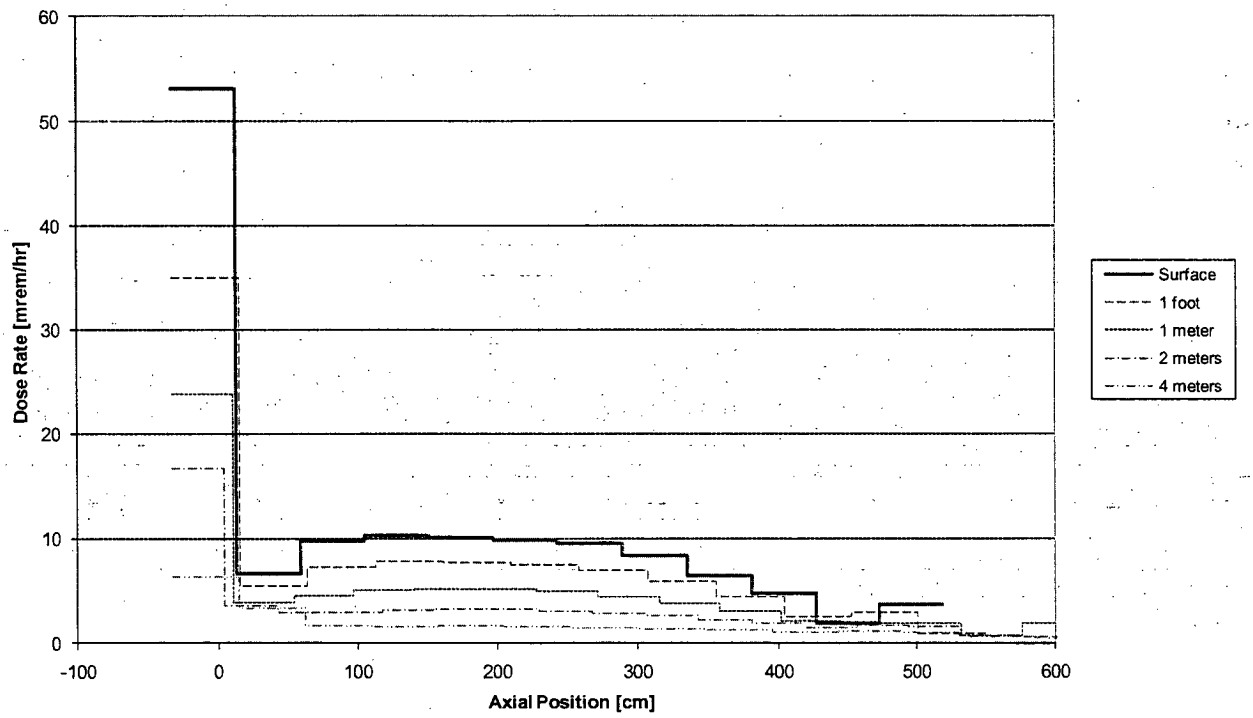

Figure 5.A.6-2 Concrete Cask Top Axial Dose Rate Profiles

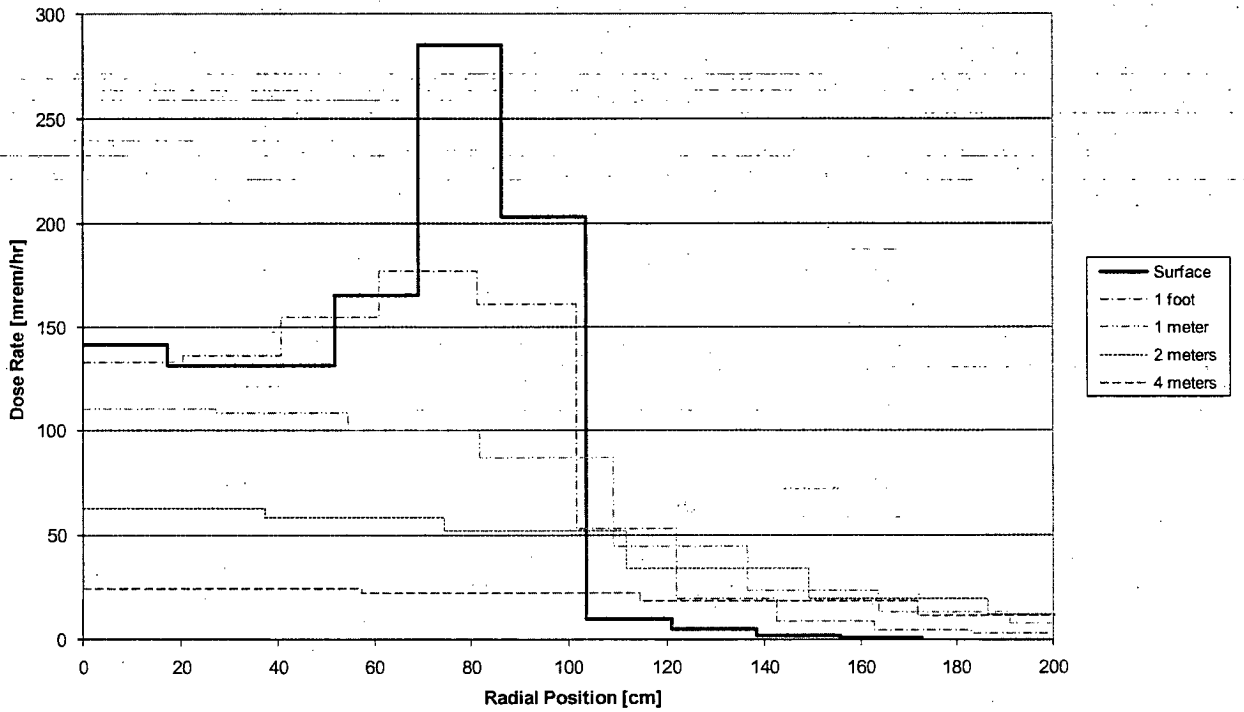

Figure 5.A.6-3 Air Outlet Elevation Surface Dose Rate Profile

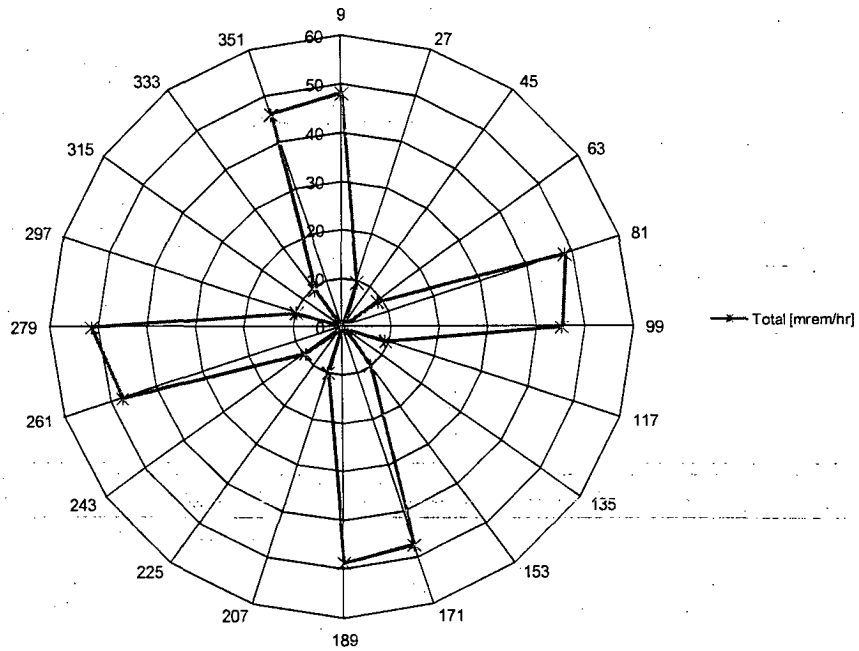

Figure 5.A.6-4 Air Inlet Elevation Surface Dose Rate Profile

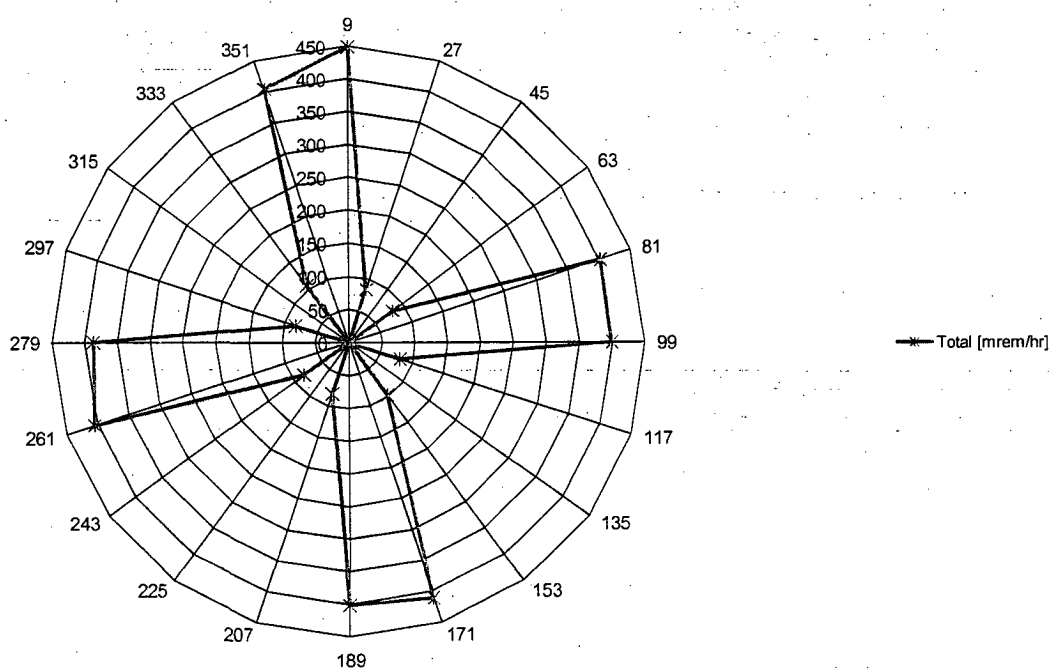

Figure 5.A.6-5 Transfer Cask Radial Dose Rate Profiles

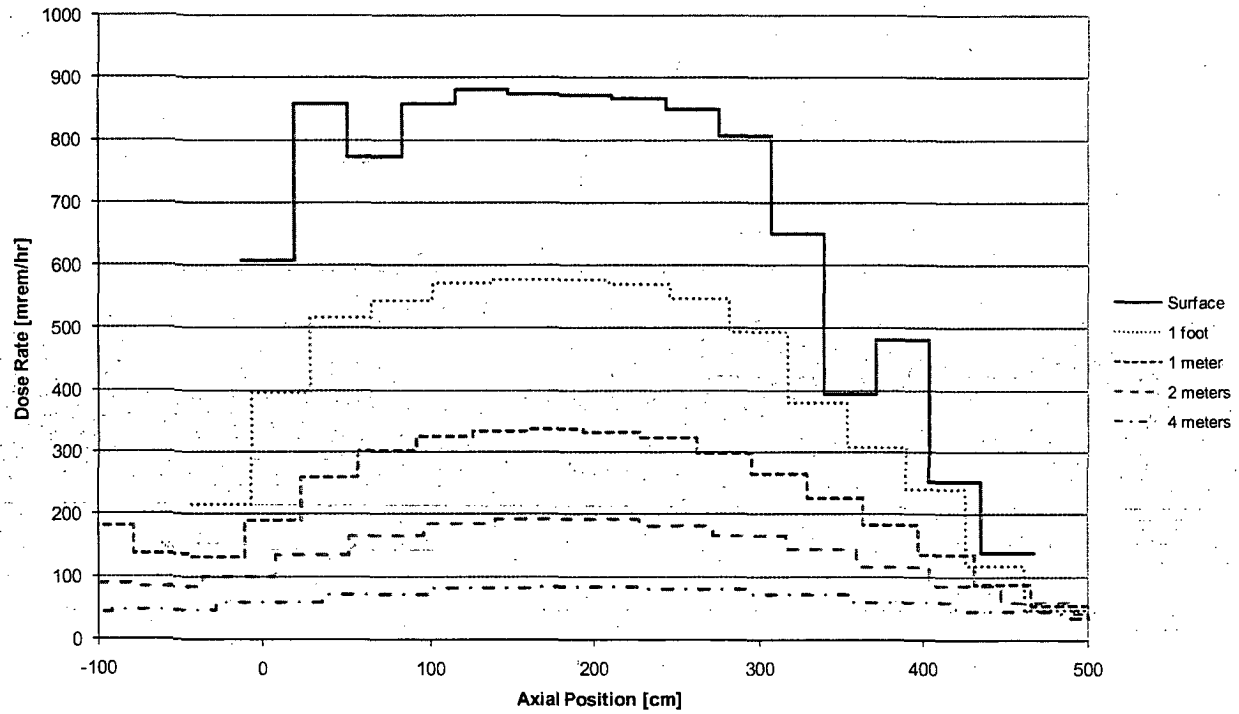

Figure 5.A.6-6 Transfer Cask Top Axial Dose Rate Profiles

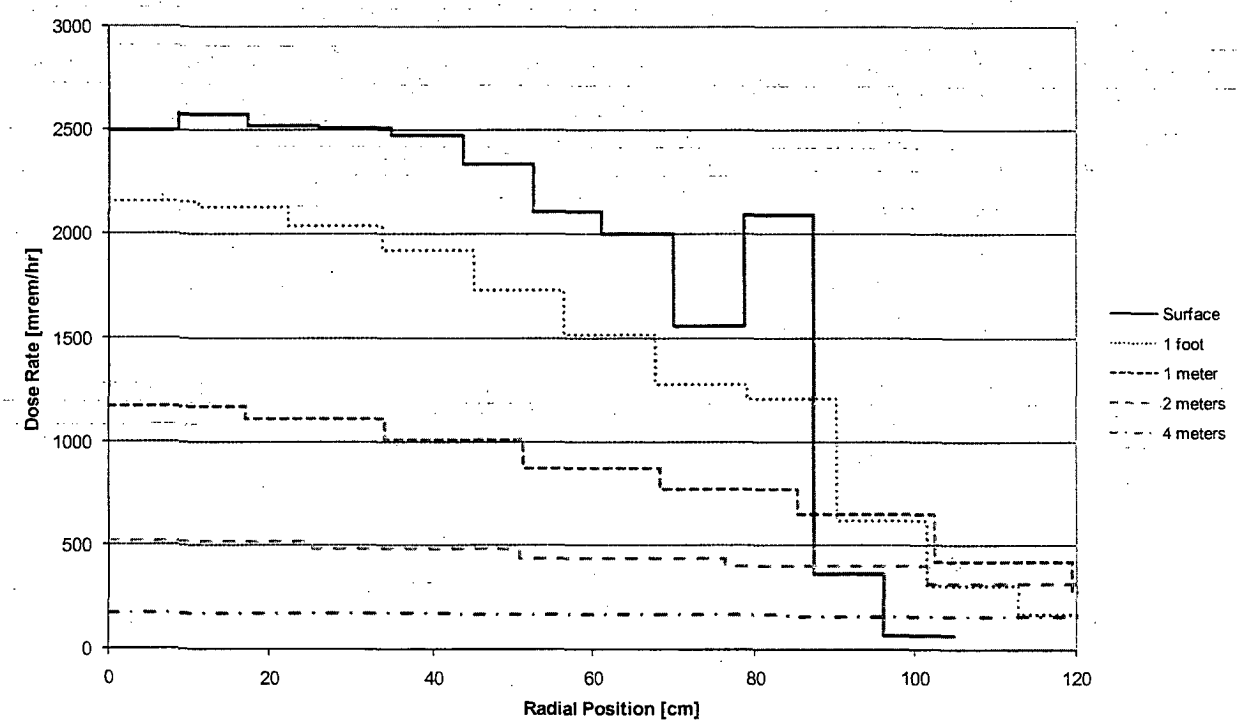

Figure 5.A.6-7 Transfer Cask Bottom Axial Dose Rate Profiles

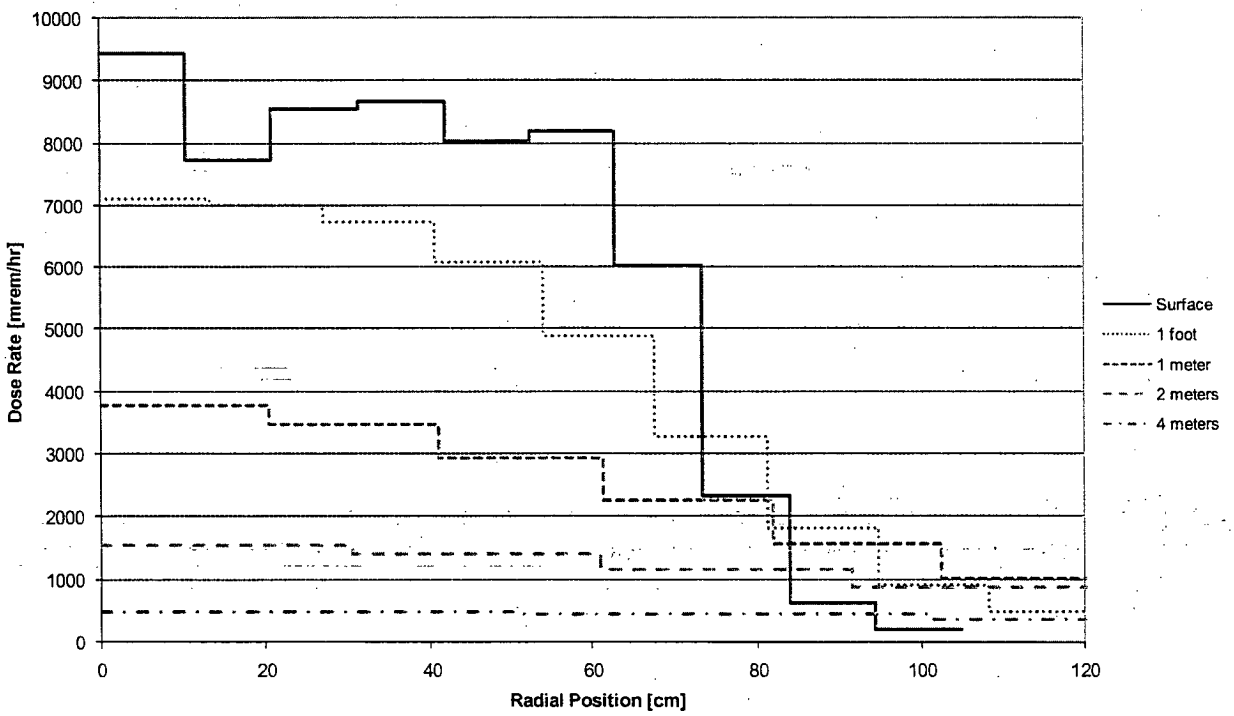

Figure 5.A.6-8 Bounding Site Boundary Dose vs. Distance

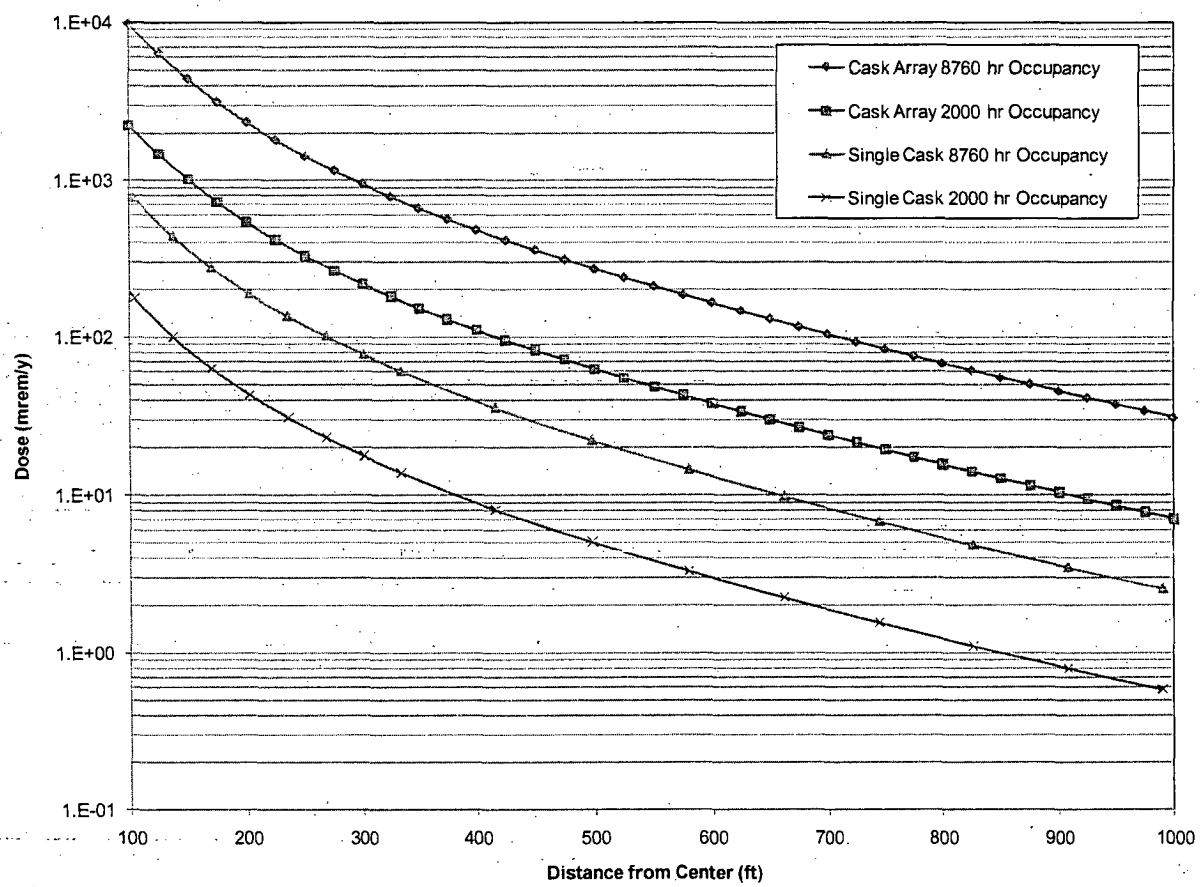

Table 5.A.6-1 Neutron Flux-to-Dose Rate Conversion Factors

Energy (MeV)	(rem/hr)/(n/cm^2/sec)
2.5E-08	3.67E-06
1.0E-07	3.67E-06
1.0E-06	4.46E-06
1.0E-05	4.54E-06
1.0E-04	4.18E-06
1.0E-03	3.76E-06
1.0E-02	3.56E-06
1.0E-01	2.17E-05
5.0E-01	9.26E-05
1.0	1.32E-04
2.5	1.25E-04
5.0	1.56E-04
7.0	1.47E-04
10.0	1.47E-04
14.0	2.08E-04
20.0	2.27E-04

Table 5.A.6-2 Gamma Flux-to-Dose Rate Conversion Factors

Energy (MeV)	(rem/hr)/(γ/cm^2/sec)	Energy (MeV)	(rem/hr)/(γ/cm^2/sec)
0.01	3.96E-06	1.4	2.51E-06
0.03	5.82E-07	1.8	2.99E-06
0.05	2.90E-07	2.2	3.42E-06
0.07	2.58E-07	2.6	3.82E-06
0.1	2.83E-07	2.8	4.01E-06
0.15	3.79E-07	3.25	4.41E-06
0.2	5.01E-07	3.75	4.83E-06
0.25	6.31E-07	4.25	5.23E-06
0.3	7.59E-07	4.75	5.60E-06
0.35	8.78E-07	5	5.80E-06
0.4	9.85E-07	5.25	6.01E-06
0.45	1.08E-06	5.75	6.37E-06
0.5	1.17E-06	6.25	6.74E-06
0.55	1.27E-06	6.75	7.11E-06
0.6	1.36E-06	7.5	7.66E-06
0.65	1.44E-06	9	8.77E-06
0.7	1.52E-06	11	1.03E-05
0.8	1.68E-06	13	1.18E-05
1	1.98E-06	15	1.33E-05

Table 5.A.6-3 Dose Summary at 100 meters from Canister Surface Contamination Release

Source	Organ / Whole Body	Exposure (mrem)
β-γ	Skin Dose (β-γ)	6.11E-08
	Lung Dose (β-γ)	3.68E-05
	Whole Body Dose (β-γ)	6.31E-06
α	Bone Surface Dose (α)	4.64E-03
	Lung Dose (α)	6.90E-04
	Whole Body Dose (α)	2.56E-04
Total	Skin Dose (β-γ)	6.11E-08
	Bone Surface Dose (α)	4.64E-03
	Whole Body Dose (α + β-γ)	2.63E-04
	Lung Dose (α + β-γ)	7.27E-04

5.A.7 Shielding Evaluation Detail

This section contains evaluation detail not found in the preceding sections.

5.A.7.1 Contents Description

Three-dimensional models of the loaded Canister within the Transfer Cask or the Concrete Cask require the relative elevations of the various source regions, hardware masses and in-core condition to describe source and shielding models. The elevation of each of the assembly regions also defines the volume into which the fuel assembly is homogenized.

As described in Section 5.A.2, PWR fuel assemblies were surveyed to construct hybrids containing maximum fuel and hardware masses. Source regions in the model are defined as the fuel neutron and gamma source originating in the active fuel region, the active fuel region hardware source (typically from activated steel or inconel grids or springs), upper and lower plenum spring sources (with lower springs being limited to B&W core fuel assemblies), and upper and lower end fittings. Grouping assemblies by these characteristics results in similar elevations for the end-fitting and plenum regions for assemblies in each group. Elevations selected for the shielding analysis are those of the maximum fuel mass assembly in each group. Merging maximum hardware masses for any assembly in the group into the basic structure of the maximum fuel mass assembly produces a bounding assembly hybrid. Geometry data for the fuel assembly hybrids are listed in Table 5.A.7.1-1, and nonzirconium alloy-based fuel assembly hardware masses are listed in Table 5.A.7.1-2.

In addition to the assembly configuration, source term generation requires in-core conditions as input into SAS2H. Inputs provided are temperatures and densities of the moderator, assembly power level, and number of days at power. The number of days at power is calculated based on the desired assembly average burnup and assembly power level. In-core characteristics are core type-dependent and vary for each of the assembly hybrids evaluated. A set of sample in-core parameters, in this case for the 17a assembly type, is presented in Table 5.A.7.1-3. The corresponding sample SAS2H input is shown in Figure 5.A.7.6-1.

Table 5.A.7.1-1 Hybrid Fuel Assembly Geometry Data

Core	CE	WE	WE	B&W	Palisades	CE	WE	B&W
Label	14a	14b	15a	15b	15c	16a	17a	17b
Array	14×14	14×14	15×15	15×15	15×15	16×16	17×17	17×17
Nominal Number of Fuel Rods	176	179	204	208	216	236	264	264
Fuel Loading [MTU]	0.4115	0.4144	0.4671	0.4807	0.4385	0.4463	0.4671	0.4681
Fuel Assembly Height [in]	157.238	161.100	160.100	165.625	149.125	178.300	159.800	165.719
Fuel Assembly Width [in]	8.250	7.763	8.449	8.536	8.336	8.250	8.426	8.536
Fuel Rod Height [in]	146.488	152.360	152.756	153.125	141.689	161.318	151.630	152.688
Top End-Cap Height [in]	0.685	0.685	0.685	0.685	1.000	0.500	0.685	0.685
Bottom End-Cap Height [in]	0.685	0.685	0.685	0.685	1.247	0.891	0.685	0.685
Max Active Length [in]	136.7	145.2	144.0	144.0	132.6	150.0	144.0	143.0
Lower Plenum Region Height [in]	0.000	0.000	0.000	4.563	0.000	0.000	0.000	4.844
Upper Plenum Region Height [in]	8.418	5.790	7.386	3.193	6.842	9.927	6.260	3.474
Lower End-Fitting Height [in]	3.312	3.188	2.738	2.000	3.200	3.812	2.700	2.000
Upper End-Fitting Height [in]	5.763	3.500	3.480	8.875	3.140	11.047	3.670	9.406
Gap Fuel Rod to Top Nozzle [in]	1.475	2.052	1.126	1.625	1.096	2.123	1.800	1.625
Rod Diameter [in]	0.440	0.422	0.422	0.430	0.418	0.382	0.374	0.379

Table 5.A.7.1-2 Hybrid Fuel Assembly Nonzirconium Alloy Hardware Masses

Core	CE	WE	WE	B&W	Palisades	CE	WE	B&W
Label	14a	14b	15a	15b	15c	16a	17a	17b
Lower Nozzle Hardware (kg)	6.080	7.893	5.680	9.610	5.400	7.300	5.900	6.870
Lower Plenum Hardware (kg)	0.000	0.000	0.000	1.980	0.000	0.000	0.000	1.560
Fuel Hardware (kg)	7.417	5.370	9.300	4.900	0.909	1.360	5.440	4.270
Upper Plenum Hardware (kg)	8.750	6.634	5.698	3.020	5.001	10.700	5.406	2.860
Upper Nozzle Hardware (kg)	11.550	9.888	11.840	10.760	4.500	16.800	7.850	18.130

Table 5.A.7.1-3 Sample In-core Characteristics

Variable	Value
Fuel Temperature	900 K
Clad Temperature	620 K
Coolant Temperature	580 K
Coolant Density	0.725 g/cm^3
Coolant Average Boron Content	550 ppm
Assembly Power	17.670 MW

5.A.7.2 Response Function Method

In general, the response method for dose rates is based on the decomposition of the respective quantity into a weighted sum over energy. A dose rate response function, $R_{tpg}(\bar{r})$, gives the response at a point $\bar{r}$ to source particles arising from energy group g from a fuel assembly placed in basket position p. In practice, the spatial parameter, $\bar{r}$, is represented as discrete subsurface detectors on the cask surface. In addition, responses for detector average and maximum values may also be represented using this notation. In the case of a dose rate response, the response $R_{tpg}(\bar{r})$ is a scalar quantity.

For a given Canister loading, the total response to radiation of type t with source spectrum f_{tp} is given by:

$$C_t(\bar{r}) = \sum_p \sum_{g'} R_{tpg'}(\bar{r}) f_{tpg'} w_{tp}$$

where:

$C_t(\bar{r})$ is the dose rate response to radiation of type t at location $\bar{r}$.

$R_{tpg'}(\bar{r})$ is the response to radiation of type t with energy g' emanating from basket position p at location $\bar{r}$.

$f_{tpg'}$ is the source strength for radiation of type t in group g' emanating from basket position p.

w_{tp} is a weight factor applied to radiation of type t in basket position p and is used to scale hardware source spectra that are provided on a per-unit mass basis by the effective mass of activated material present in the source region.

The source type t refers to fuel gamma (Fg), fuel neutron (Fn), fuel n-gamma (Ng), fuel hardware (Hw), upper plenum (Up), upper fitting (Uf), lower plenum (Lp), or lower fitting (Lf) source regions.

Response functions for the Transfer Cask and the Vertical Concrete Cask (generated using MCNP) solve the particle transport equations at each relevant spectrum line using Monte Carlo techniques. The results of the individual spectrum lines are then statistically summed. As the basket is loaded uniformly, the dose rate response can be calculated for a source located in multiple fuel assembly locations using Monte Carlo sampling within MCNP. For the uniform loading, the basket position variable is, therefore, not required within the summation. Note that the term is still accounted for directly within the MCNP run.

Source terms are generated in a 28-group neutron and 22-group gamma structure. Dose rate responses are adequately modeled by evaluating only a subset of the source spectrum energy groups. In the fuel neutron case, groups 1 through 3 and 15 through 28 do not contribute significantly to the result. The fuel gamma response is accurately calculated by considering energy groups 7 through 15. Energy lines relevant to the analysis of activated zirconium, steel and inconel hardware are limited to groups 12 and 13. The remaining energy lines either contain no significant source magnitudes or are too low in energy to penetrate the cask shields.

A comparison of the results of the direct calculation (i.e., a calculation based on use of the complete gamma, neutron or hardware gamma source spectrum in an MCNP run) and dose response method (summation of dose calculation at each energy group) is documented to validate the response method, including the reduction in energy lines evaluated. Graphical comparisons of the two solution methods are generated for storage systems at two burnup/enrichment combinations. The combinations evaluated are low burnup/low enrichment of 25 GWd/MTU and 2.5 wt % ^{235}U and medium burnup/medium enrichment of 35 GWd/MTU and 3.5 wt % ^{235}U. All cases are at system bounding minimum cool times (based on 25 kW). Also included as graphical comparisons are sample Concrete and Transfer Cask top and radial cases. Only single runs are included for these surfaces as the method description, sample response tables, and the extensive radial concrete cask cases provide sufficient documentation on the accuracy of the method. The comparison plots are included in Figure 5.A.7.2-1 through Figure 5.A.7.2-6. At the bottom of the Concrete Cask, the direct solution fuel gamma case is inherently difficult to bias, given the scattering path through the air inlets and the variation in shield configuration as a function of angle. The response method, with its simplified energy treatment (one energy group per MCNP run) provides a better converged response function.

Direct calculation and dose response method results are also compared for the radial surface of the concrete cask using the 17a hybrid at 45 GWd/MTU assembly average burnup, 4.1 wt % ^{235}U initial enrichment, and 5-year cool time. The cumulative results are plotted in Figure 5.A.7.2-9. A tabular comparison is presented in Table 5.A.7.2-1, along with a "% Diff" column that shows the percentage difference between the results of the direct solution of the problem and those of the dose response method solution. Sample response functions used in the generation of Figure 5.A.7.2-9 are included in Table 5.A.7.2-2 through Table 5.A.7.2-4. The tables demonstrate the implementation of the dose summation function, while simultaneously justifying the reduction in the number of energy lines by example. Energy lines used in the dose assessment are shown in italics and represent 99+% of the total dose. Energy lines with no (0) source magnitude are not included in the tables.

The response function method allows the MCNP weight window (acceleration) map to be optimized for a particular source energy, producing an increased number of particles scoring per source particle. The response function also allows for a significant reduction in the number of MCNP shielding runs, thereby increasing the number of particles per MCNP run (based on fixed computer resources). For example, a single fuel type has approximately 20,000 source runs associated with it, requiring the same number of MCNP runs to determine a complete dose rate set. The same dose rate set for fuel gamma and neutron cases may be generated using approximately 20 MCNP runs (one per relevant neutron and gamma energy line) using the response function.

The applicability of the response function method to determine dose rates at the range of burnups requested is based on the ability to apply fresh fuel material composition-based dose rate responses to spent fuel. A single dose response may be generated for all burnups of a particular assembly type, as dose rates have historically been calculated using a fresh fuel material composition. To confirm the accuracy of this assumption, radial dose rates are calculated for a sample burnup (45 GWd/MTU) fuel assembly in the Transfer Cask and the Concrete Cask and compared to the fresh fuel results. Radial dose profiles for fresh and spent fuel isotopics are shown in Figure 5.A.7.2-7 and Figure 5.A.7.2-8 and demonstrate the acceptability of the fresh fuel assumption (i.e., there is no significant dose change associated with the fresh fuel model).

Figure 5.A.7.2-1 Comparison of Response Method to Direct Solution: Concrete Cask Radial Surface – Low Burnup/Low Enrichment

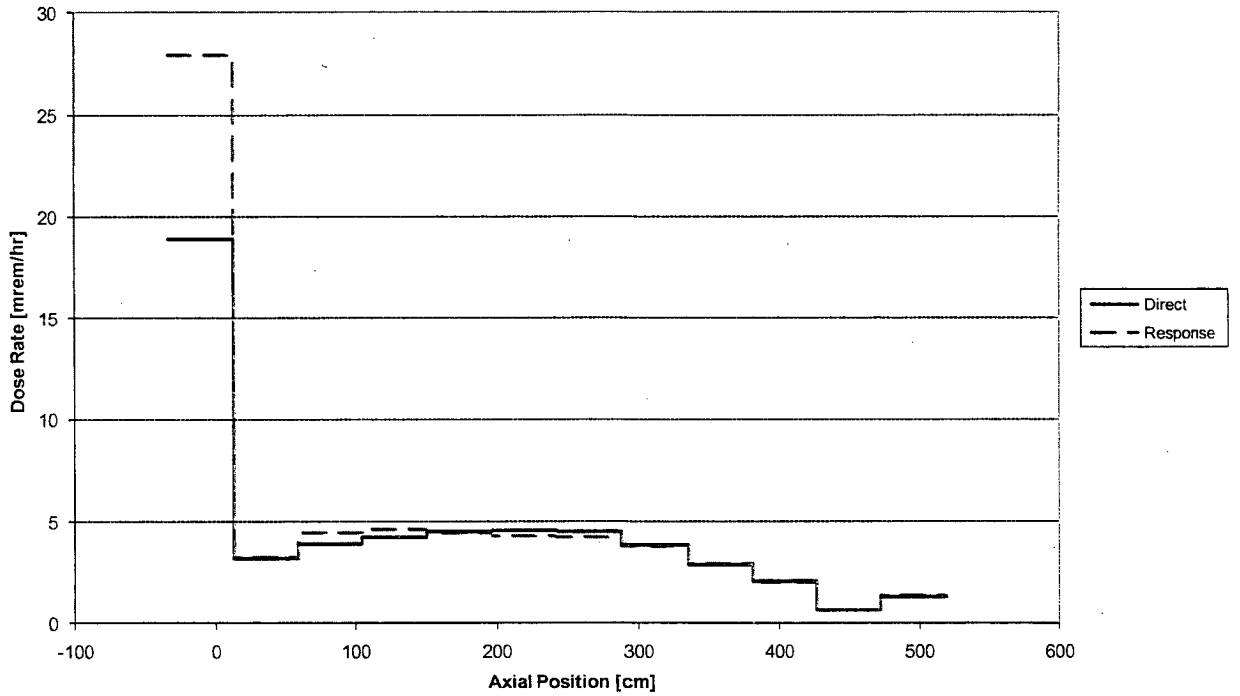

Note: "Direct" method calculated air inlet elevation dose rates, while showing a low Monte Carlo error (< 5% fractional standard deviation), are not converged due to particle streaming in the air inlets. This results in large differences between the converged dose response solution and the direct solution. Dose response method results are higher due to improved tracking of scattered radiation.

Figure 5.A.7.2-2 Comparison of Response Method to Direct Solution: Concrete Cask Radial Surface – Medium Burnup/Medium Enrichment

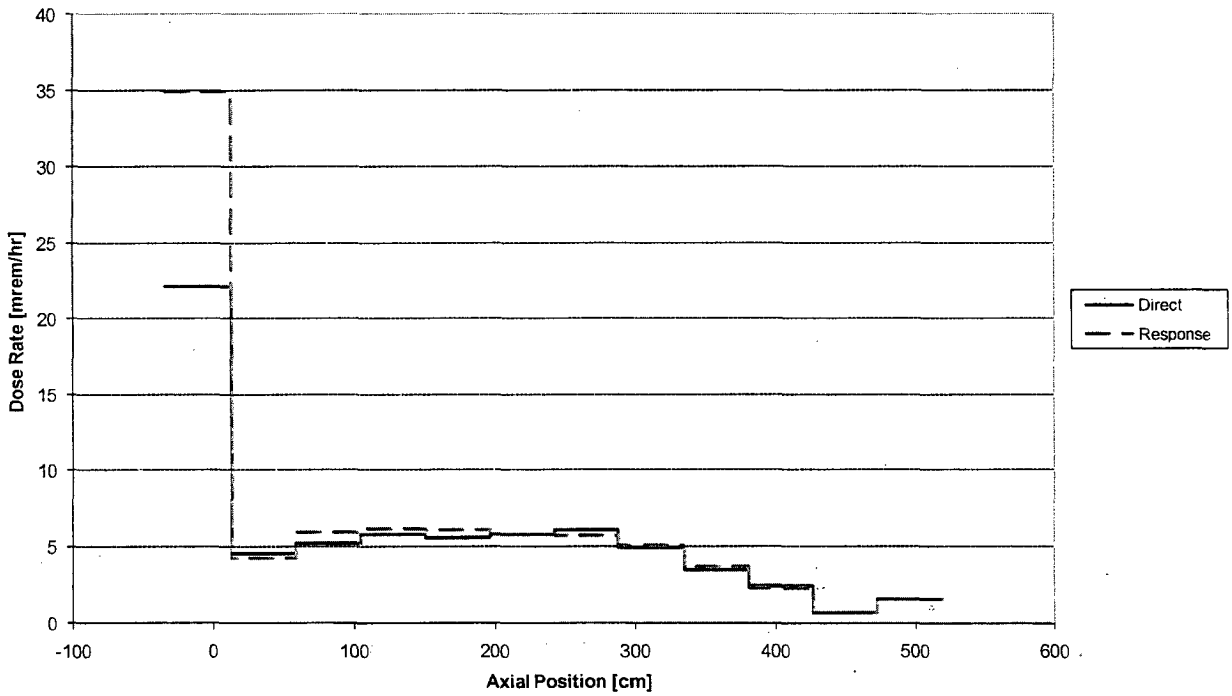

Note: "Direct" method calculated air inlet elevation dose rates, while showing a low Monte Carlo error (< 5% fractional standard deviation), are not converged due to particle streaming in the air inlets. This results in large differences between the converged dose response solution and the direct solution. Dose response method results are higher due to improved tracking of scattered radiation.

Figure 5.A.7.2-3 Comparison of Response Method to Direct Solution: Concrete Cask Radial Surface – Bounding Source Term

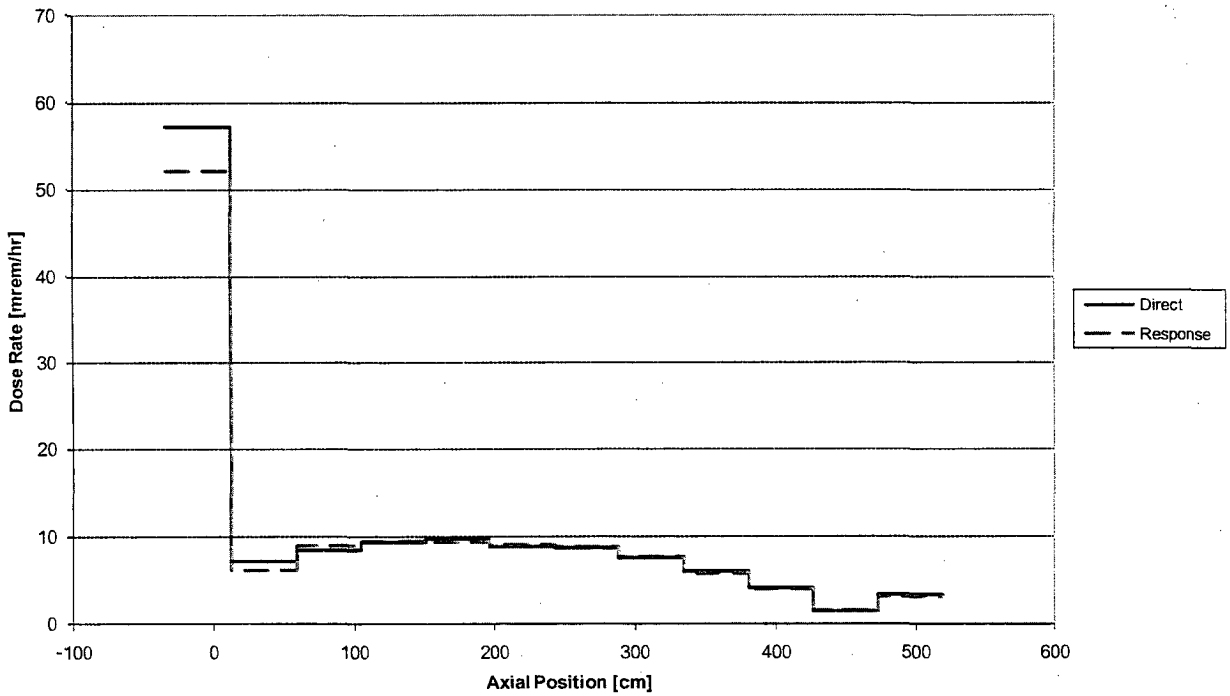

Figure 5.A.7.2-4 Comparison of Response Method to Direct Solution: Concrete Cask Top Surface – Bounding Source Term

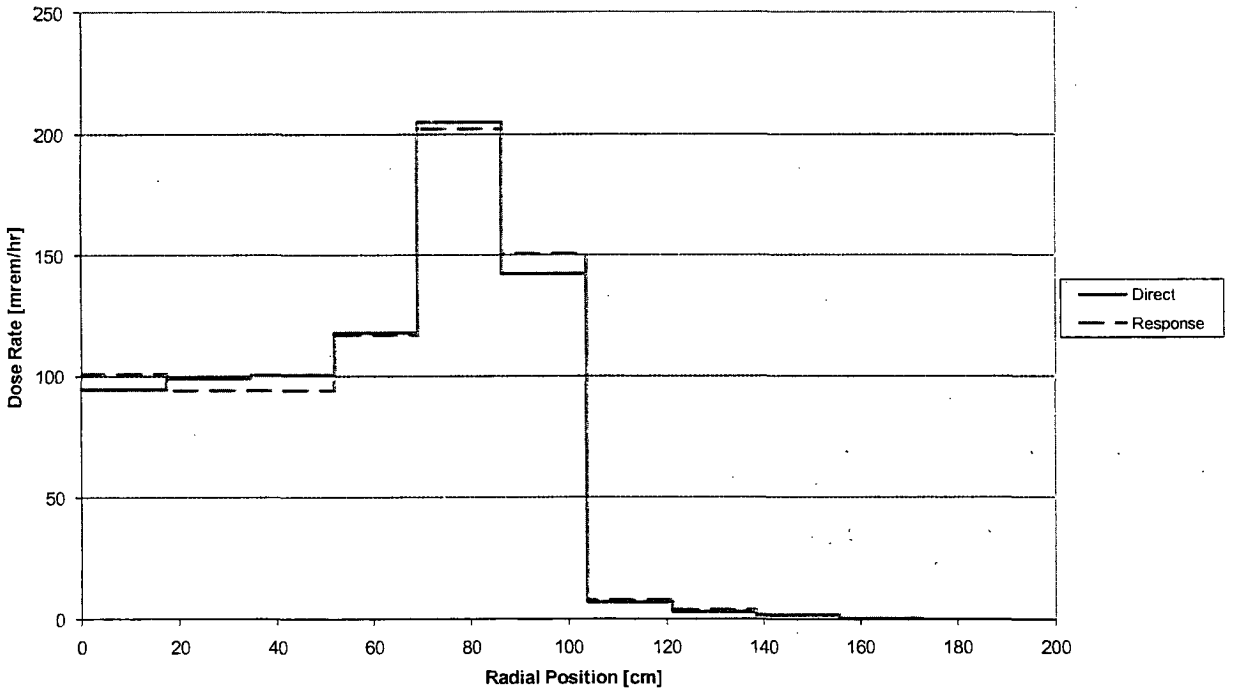

Figure 5.A.7.2-5 Comparison of Response Method to Direct Solution: Transfer Cask Radial Surface – Bounding Source Term

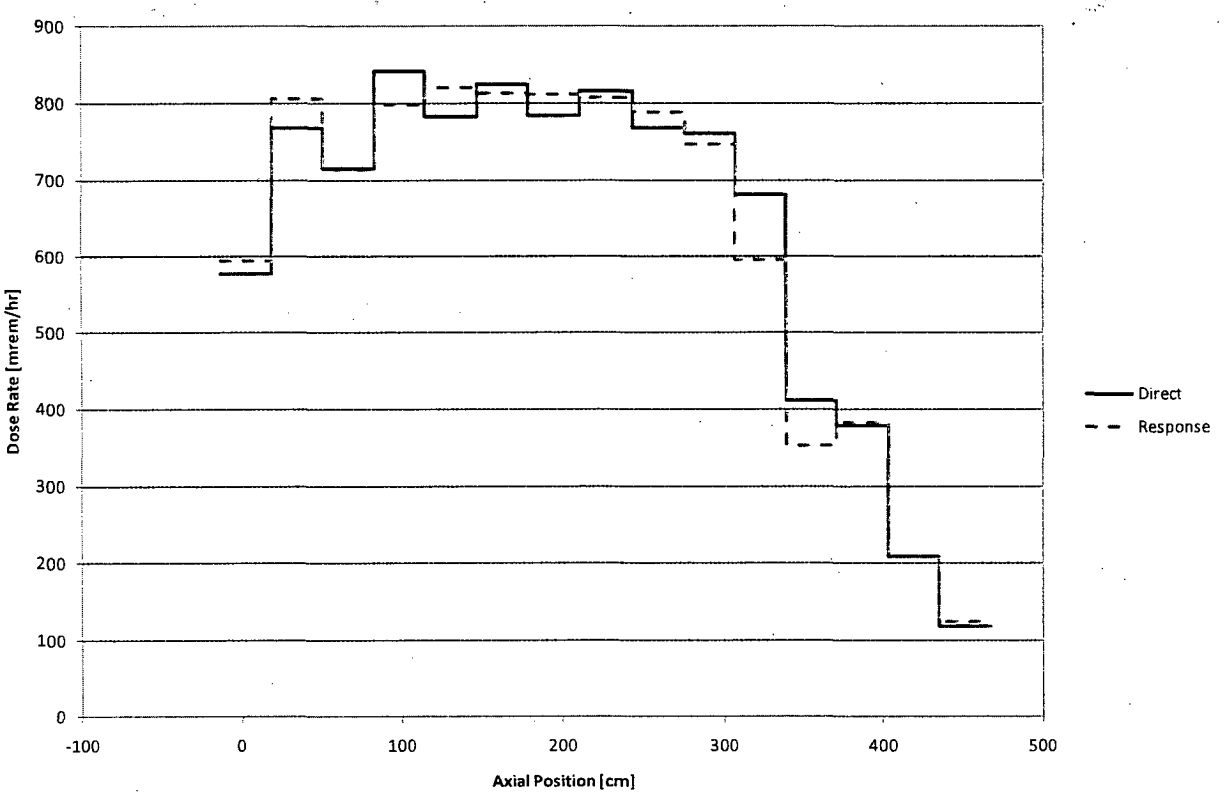

Figure 5.A.7.2-6 Comparison of Response Method to Direct Solution: Transfer Cask Top Surface – Bounding Source Term

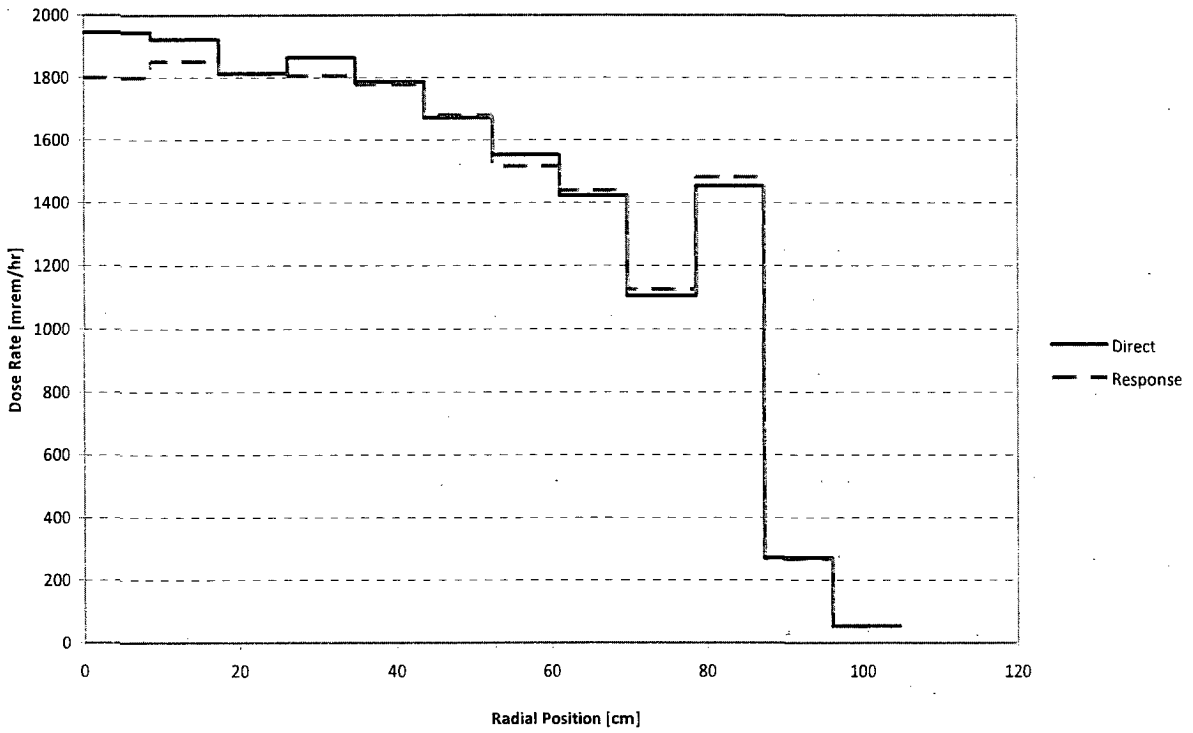

Figure 5.A.7.2-7 Concrete Cask Radial Dose Rates– Fresh Fuel versus Spent Fuel Isotopics – 45 GWd/MTU, 4.1 wt % ^{235}U

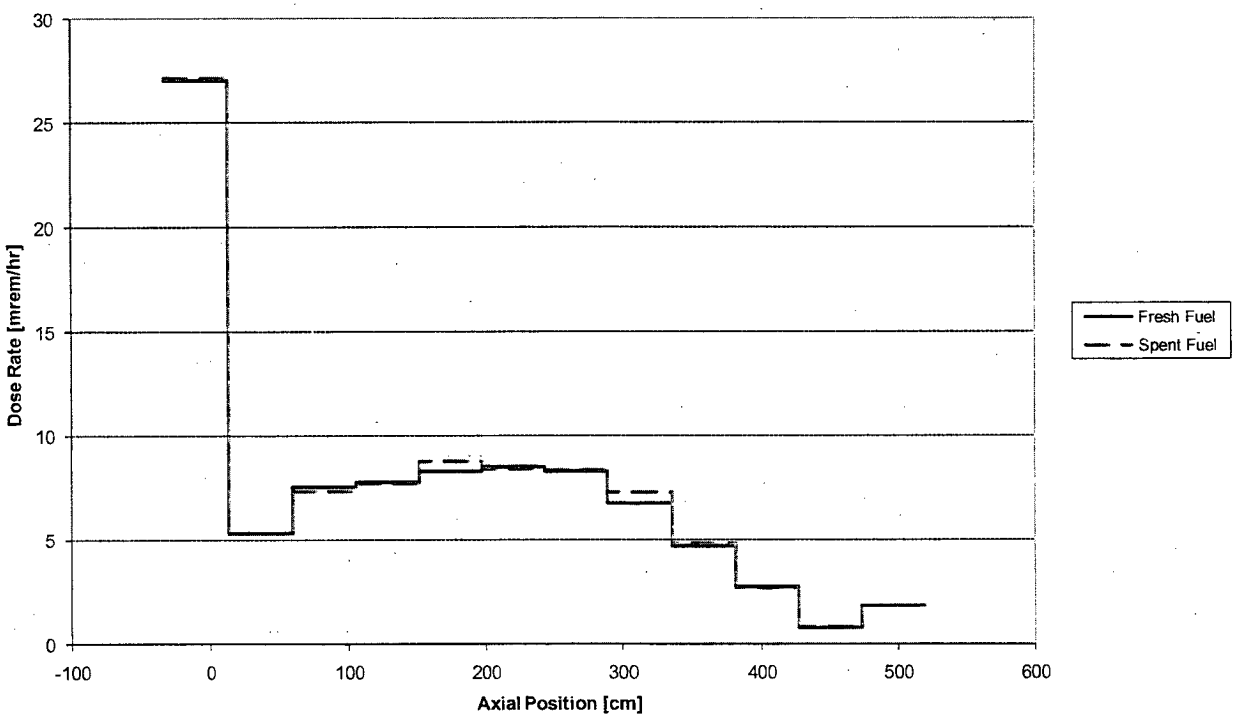

Figure 5.A.7.2-8 Transfer Cask Radial Dose Rates– Fresh Fuel versus Spent Fuel Isotopics – 45 GWd/MTU, 4.1 wt % ^{235}U

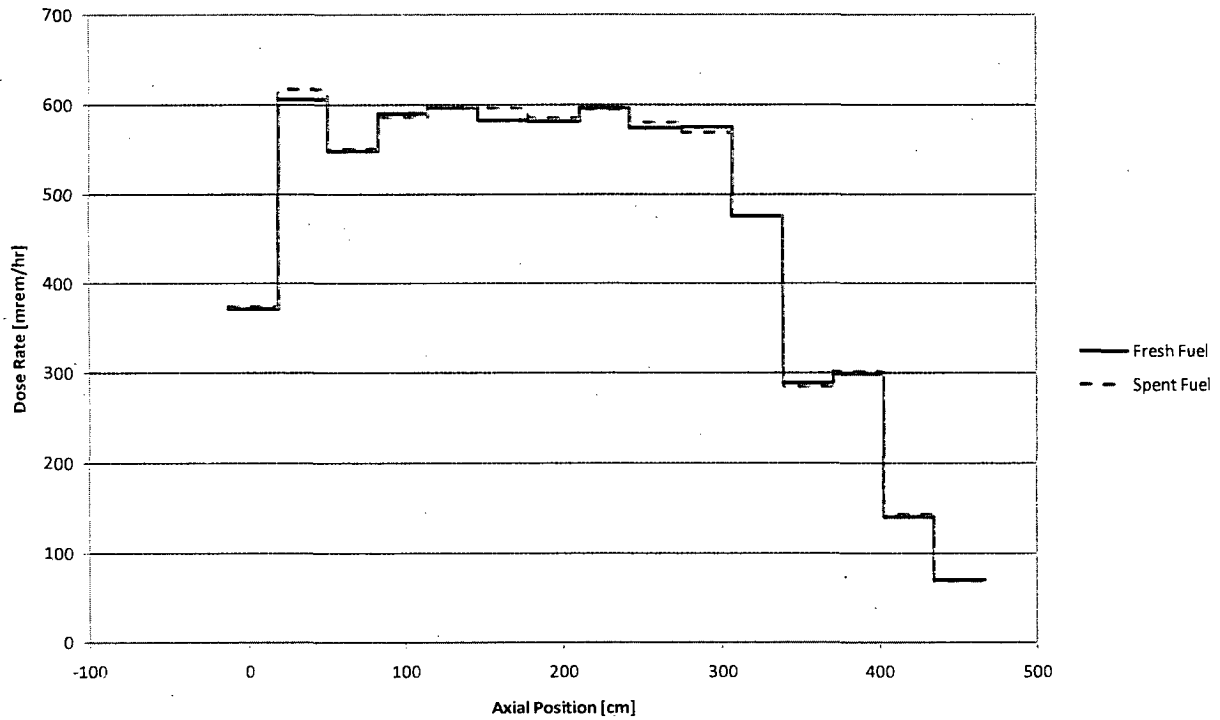

Figure 5.A.7.2-9 Comparison of Response Method to Direct Solution: Concrete Cask Radial Surface – 45 GWd/MTU, 4.1 wt % ^{235}U

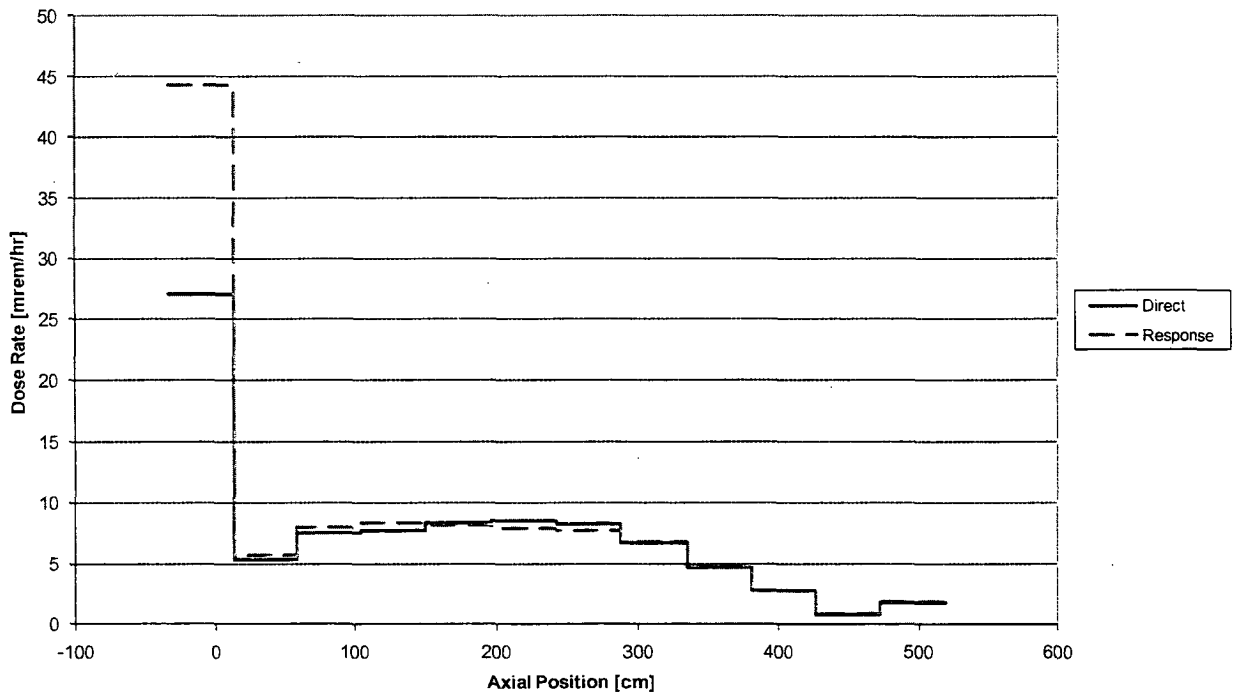

Note: "Direct" method calculated air inlet elevation dose rates, while showing a low Monte Carlo error (< 5% fractional standard deviation), are not converged due to particle streaming in the air inlets. This results in large differences between the converged dose response solution and the direct solution. Dose response method results are higher due to improved tracking of scattered radiation.

Table 5.A.7.2-1 Response Method to Direct Calculation Comparison – Concrete Cask

Subdet.	Avg. Axial [cm]	Total - Direct		Total - DRM		
		Dose Rate [mrem/hr]	FSD [%]	Dose Rate [mrem/hr]	FSD [%]	% Diff
1	-10.02	27.04	3.2%	44.25	4.4%	63.7%
2	35.97	5.33	5.5%	5.66	1.4%	6.2%
3	81.96	7.56	4.5%	7.97	0.9%	5.5%
4	127.96	7.75	4.1%	8.35	0.8%	7.7%
5	173.95	8.31	5.2%	8.20	0.8%	-1.3%
6	219.94	8.51	6.3%	7.89	0.9%	-7.2%
7	265.93	8.29	5.3%	7.70	0.9%	-7.2%
8	311.93	6.72	5.3%	6.76	0.9%	0.6%
9	357.92	4.67	5.6%	4.77	1.0%	2.1%
10	403.91	2.76	3.9%	2.81	0.9%	1.9%
11	449.91	0.79	1.3%	0.83	1.3%	5.2%
12	495.90	1.82	2.1%	1.88	4.4%	3.4%

Table 5.A.7.2-2 Sample Gamma Response Calculation for Concrete Cask Radial Surface – Fuel Centerline (4.1 wt %, 45 GWd/MTU, 5-Year Cooled 17a Hybrid)

Energy Group	E-Lower (MeV)	E-Upper (MeV)	Response (mrem/hr/g/s)	Source (g/s)	Dose Rate (mrem/hr)
2	1.00E+01	1.20E+01	5.2924E-11	9.3500E+03	4.9484E-07
3	8.00E+00	1.00E+01	4.3325E-11	1.8080E+05	7.8331E-06
4	6.50E+00	8.00E+00	3.2670E-11	8.5170E+05	2.7825E-05
5	5.00E+00	6.50E+00	2.0889E-11	4.3420E+06	9.0700E-05
6	4.00E+00	5.00E+00	1.1069E-11	1.0820E+07	1.1977E-04
7	*3.00E+00*	*4.00E+00*	*5.0680E-12*	*8.0831E+09*	*4.0965E-02*
8	*2.50E+00*	*3.00E+00*	*1.8607E-12*	*8.7394E+10*	*1.6262E-01*
9	*2.00E+00*	*2.50E+00*	*7.1989E-13*	*2.5301E+12*	*1.8214E+00*
10	*1.66E+00*	*2.00E+00*	*2.3338E-13*	*1.2361E+12*	*2.8848E-01*
11	*1.44E+00*	*1.66E+00*	*7.8857E-14*	*6.4990E+12*	*5.1249E-01*
12	*1.22E+00*	*1.44E+00*	*2.9289E-14*	*6.3060E+13*	*1.8470E+00*
13	*1.00E+00*	*1.22E+00*	*7.6511E-15*	*4.9840E+13*	*3.8133E-01*
14	*8.00E-01*	*1.00E+00*	*1.5611E-15*	*3.5450E+14*	*5.5342E-01*
15	*6.00E-01*	*8.00E-01*	*1.9686E-16*	*2.6022E+15*	*5.1229E-01*
16	4.00E-01	6.00E-01	1.0656E-17	8.1739E+14	8.7101E-03
17	3.00E-01	4.00E-01	1.9731E-19	7.1524E+13	1.4113E-05
18	2.00E-01	3.00E-01	0.0000E+00	1.0239E+14	0.0000E+00
19	1.00E-01	2.00E-01	0.0000E+00	3.6119E+14	0.0000E+00
20	5.00E-02	1.00E-01	0.0000E+00	4.4356E+14	0.0000E+00
21	2.00E-02	5.00E-02	0.0000E+00	1.0086E+15	0.0000E+00
22	1.00E-02	2.00E-02	0.0000E+00	7.3336E+14	0.0000E+00
				Total (Evaluated Energy Lines)	6.120

Table 5.A.7.2-3 Sample Neutron Response Calculation for Concrete Cask Radial Surface – Fuel Centerline (4.1 wt %, 45 GWd/MTU, 5-Year Cooled 17a Hybrid)

Energy Group	E-Lower (MeV)	E-Upper (MeV)	Response (mrem/hr/n/s)	Source (n/s)	Dose Rate (mrem/hr)
1	1.360E+01	1.460E+01	7.5511E-09	1.0600E+04	8.0042E-05
2	1.250E+01	1.360E+01	5.3565E-09	2.8510E+04	1.5271E-04
3	1.125E+01	1.250E+01	4.7251E-09	8.7170E+04	4.1189E-04
4	*1.000E+01*	*1.125E+01*	*4.3269E-09*	*2.4270E+05*	*1.0501E-03*
5	*8.250E+00*	*1.000E+01*	*3.8305E-09*	*1.1700E+06*	*4.4816E-03*
6	*7.000E+00*	*8.250E+00*	*4.0289E-09*	*2.5660E+06*	*1.0338E-02*
7	*6.070E+00*	*7.000E+00*	*4.4098E-09*	*4.2300E+06*	*1.8653E-02*
8	*4.720E+00*	*6.070E+00*	*2.4316E-09*	*1.4070E+07*	*3.4212E-02*
9	*3.680E+00*	*4.720E+00*	*1.6415E-09*	*2.3980E+07*	*3.9362E-02*
10	*2.870E+00*	*3.680E+00*	*9.7808E-10*	*3.3160E+07*	*3.2433E-02*
11	*1.740E+00*	*2.870E+00*	*1.1189E-09*	*7.6310E+07*	*8.5383E-02*
12	*6.400E-01*	*1.740E+00*	*3.3795E-10*	*1.0590E+08*	*3.5789E-02*
13	*3.900E-01*	*6.400E-01*	*2.7123E-10*	*2.3890E+07*	*6.4798E-03*
14	*1.100E-01*	*3.900E-01*	*2.3268E-10*	*2.1180E+07*	*4.9281E-03*
15	6.740E-02	1.100E-01	1.5183E-10	*2.1250E+06*	3.2265E-04
16	2.480E-02	6.740E-02	1.2208E-10	1.5540E+06	1.8971E-04
17	9.120E-03	2.480E-02	6.9748E-11	3.5210E+05	2.4558E-05
18	2.950E-03	9.120E-03	3.5064E-11	8.2870E+04	2.9057E-06
19	9.610E-04	2.950E-03	2.4002E-11	1.5230E+04	3.6555E-07
20	3.540E-04	9.610E-04	1.6592E-11	2.7030E+03	4.4849E-08
21	1.660E-04	3.540E-04	1.0807E-11	5.2870E+02	5.7138E-09
22	4.810E-05	1.660E-04	7.2702E-12	2.1110E+02	1.5347E-09
23	1.600E-05	4.810E-05	3.3398E-12	3.1500E+01	1.0520E-10
24	4.000E-06	1.600E-05	2.2477E-12	6.5160E+00	1.4646E-11
25	1.500E-06	4.000E-06	1.5920E-12	7.1740E-01	1.1421E-12
26	5.500E-07	1.500E-06	5.2417E-13	1.6650E-01	8.7274E-14
27	7.090E-08	5.500E-07	9.9950E-14	4.5380E-02	4.5357E-15
28	1.000E-11	7.090E-08	3.0235E-15	2.2180E-03	6.7060E-18
				Total (Evaluated Energy Lines)	0.273

Table 5.A.7.2-4 Sample Hardware Gamma (Lower End-Fitting) Response Calculation for Concrete Cask Radial Surface – Lower End-Fitting Elevation (4.1 wt%, 45 GWd/MTU, 5-Year Cooled 17a Hybrid)

Energy Group	E-Lower (MeV)	E-Upper (MeV)	Response (mrem/hr/g/s)	Source (g/s)	Dose Rate (mrem/hr)
7	3.00E+00	4.00E+00	3.8915E-11	3.8735E-12	1.5074E-22
8	2.50E+00	3.00E+00	2.1070E-11	2.4536E+04	5.1698E-07
9	2.00E+00	2.50E+00	1.7707E-11	2.8713E+07	5.0843E-04
10	1.66E+00	2.00E+00	1.0777E-11	1.8841E+02	2.0304E-09
11	1.44E+00	1.66E+00	6.8612E-12	7.5709E+00	5.1945E-11
12	*1.22E+00*	*1.44E+00*	*4.2466E-12*	*2.6983E+12*	*1.1459E+01*
13	*1.00E+00*	*1.22E+00*	*3.3911E-12*	*2.8438E+12*	*9.6435E+00*
14	8.00E-01	1.00E+00	1.7073E-12	3.8381E+10	6.5527E-02
15	6.00E-01	8.00E-01	8.1051E-13	5.5043E+06	4.4613E-06
16	4.00E-01	6.00E-01	2.5800E-13	1.5025E+07	3.8765E-06
17	3.00E-01	4.00E-01	7.0128E-14	2.2908E+08	1.6065E-05
18	2.00E-01	3.00E-01	8.7049E-15	1.7503E+08	1.5236E-06
19	1.00E-01	2.00E-01	3.9142E-16	3.5431E+09	1.3869E-06
20	5.00E-02	1.00E-01	0.0000E+00	1.4593E+10	0.0000E+00
21	2.00E-02	5.00E-02	0.0000E+00	4.1685E+10	0.0000E+00
22	1.00E-02	2.00E-02	0.0000E+00	4.9576E+10	0.0000E+00
				Total (Evaluated Energy Lines)	21.102

5.A.7.3 21-Assembly PWR System

This section presents the detailed evaluations of the Concrete Cask and the Transfer Cask loaded with 21 PWR fuel assemblies.

5.A.7.3.1 Fuel and Basket Models

The three-dimensional shielding evaluation includes a homogenized fuel assembly model and a detailed three-dimensional basket model.

5.A.7.3.1.1 Fuel Assembly Model

Based on the fuel assembly physical parameters provided in Table 5.A.7.1-1 and the hardware masses in Table 5.A.7.1-2, homogenized treatments of fuel assembly source regions are developed. The homogenized fuel assembly is represented in the model as a stack of boxes with width equal to the fuel assembly width. The height of each box corresponds to the modeled height of the corresponding assembly region.

Sample fuel and nonfuel hardware homogenizations for the source regions for the 17a assembly are shown in Table 5.A.7.3-1 and Table 5.A.7.3-2. Similar composition sets are generated for the remaining fuel assembly hybrids.

5.A.7.3.1.2 Basket Model

The basket is composed of borated stainless steel tubes held in position by stainless steel support disks, top and bottom weldments and tie rods. There are 21 fuel tubes. Each fuel tube is constructed from four interlocking borated stainless steel plates that serve as the neutron absorbers. Key basket characteristics are shown in Table 5.A.7.3-3. Radial and axial sketches of the basket within the Canister are shown in Figure 5.A.7.3-1 and Figure 5.A.7.3-2.

5.A.7.3.2 Minimum Cool-time Specification

SAS2H generates heat loads for all fuel types listed in Section 5.A.7.1. Based on a 25 kW per cask heat load, minimum allowed cool times for each fuel type are calculated. Calculated heat loads account for fuel material (actinide and fission product) and hardware (light element) generated sources. Minimum cool times are conservatively rounded up to the nearest one-tenth of a year. A sample minimum cool time calculation for the 17a assembly is shown in Table 5.A.7.3-4. The resulting minimum cool times are listed in assembly specific loading tables (see Table 5.A.7.3-5). Note that cool times for maximum assembly average burnups less than or equal to 40,000 MWd/MTU are not tabulated since they are equal to five years for all eight fuel

types. However, the following minimum enrichments for these assembly average burnups must be invoked.

Max. Assembly Avg. Burnup (MWd/MTU)	Min. Assembly Avg. Initial Enrichment (wt% ^{235}U)
10,000	1.3
15,000	1.5
20,000	1.7
25,000	1.9
30,000	2.1
35,000	2.3
40,000	2.5

Source term data covering combinations of high burnup and low enrichments produce unrealistic source terms due to the complete consumption of fissile uranium early in the burnup cycle and the SAS2H input of a fixed power density. To maintain power density, ORIGEN-S (SAS2H) will substantially increase flux levels, which would not occur during core operation of the assembly, to produce fissile material and to produce power by nonthermal fission. The increased flux level "breeds" higher actinides, which in turn increase source significantly.

5.A.7.3.2.1 Transfer Cask Dose Rates

Using the dose response method, Transfer Cask dose rates are tabulated for all allowed cool time, assembly average burnup, and initial enrichment combinations for each of the assembly types. Dose rates profiles as a function of distance from the Transfer Cask surface are shown in Figure 5.A.7.3-3 for the cask radial surface, Figure 5.A.7.3-5 for the cask top, and Figure 5.A.7.3-7 for the cask bottom. Breakdowns of the cask surface radial, top and bottom dose rates into the source components are shown in Figure 5.A.7.3-4, Figure 5.A.7.3-6, and Figure 5.A.7.3-8. The bounding payloads with cask surface maximum and average dose rate for each cask surface are shown in Table 5.A.7.3-6.

5.A.7.3.2.2 Concrete Cask Dose Rates

Using the dose response method, Concrete Cask dose rates are tabulated for all allowed cool time, assembly average burnup, and initial enrichment combinations for each of the assembly types. Dose rate profiles as a function of distance from the Concrete Cask surface are shown in Figure 5.A.7.3-9 for the cask radial surface, Figure 5.A.7.3-11 for the cask top, and Figure 5.A.7.3-13 and Figure 5.A.7.3-14 for the cask air outlet and inlets, respectively. Breakdowns of

the cask surface radial and top dose rates into the source components are shown in Figure 5.A.7.3-10 and Figure 5.A.7.3-12. Refer to Table 5.A.7.3-7 for the maximum Concrete Cask surface dose rates and the contents that develop the dose rates.

5.A.7.3.2.3 NAC-CASC Site Boundary Evaluation

Detailed direct and skyshine dose rates as a function of distance are calculated for a single Concrete Cask and a 2×10 array of Concrete Casks based on the model description and method outlined in Section 5.A.5. All allowable payload combinations (i.e., fuel type, initial enrichment, assembly average burnup and cool time) that meet per-assembly heat load limits were reviewed to determine the payloads producing maximum top (axial) and side (radial) dose rates. These payload cases were then run through MCNP using a "direct" solution approach (full source spectrum), rather than the response function method, to generate cask top and side surface radiation currents. The surfaces were treated independently to generate a conservative hybrid source model for a design basis analysis cask.

Table 5.A.7.3-8 lists the surface current description of the bounding source for the cask radial and axial surfaces. The resulting boundary required to meet a 25 mrem/yr limit for an 8,760-hr exposure is listed in Table 5.A.7.3-9. Figure 5.A.7.3-17 contains a contour plot of the 25 mrem/yr boundary. Yearly exposure as a function of distance is plotted in Figure 5.A.7.3-15 for a single cask and in Figure 5.A.7.3-16 for the cask array. A breakdown of the neutron, gamma, and neutron induced gamma radiation components as a function of distance is provided below each plot.

Radial gamma results are scaled upward consistent with the combination of fuel, BPRA and thimble plug dose rates discussed in Section 5.A.7.4. Restricted loading of CEAs into the Canister center slots results in no site boundary impacts of these components. The scaling of fuel assembly source derived surface currents to account for nonfuel hardware is performed within the NAC-CASC input files.

A sample NAC-CASC input file is provided in Section 5.A.7.6. The detector location grid is truncated in the listed input file.

Figure 5.A.7.3-1 Basket within Canister – Radial Detail

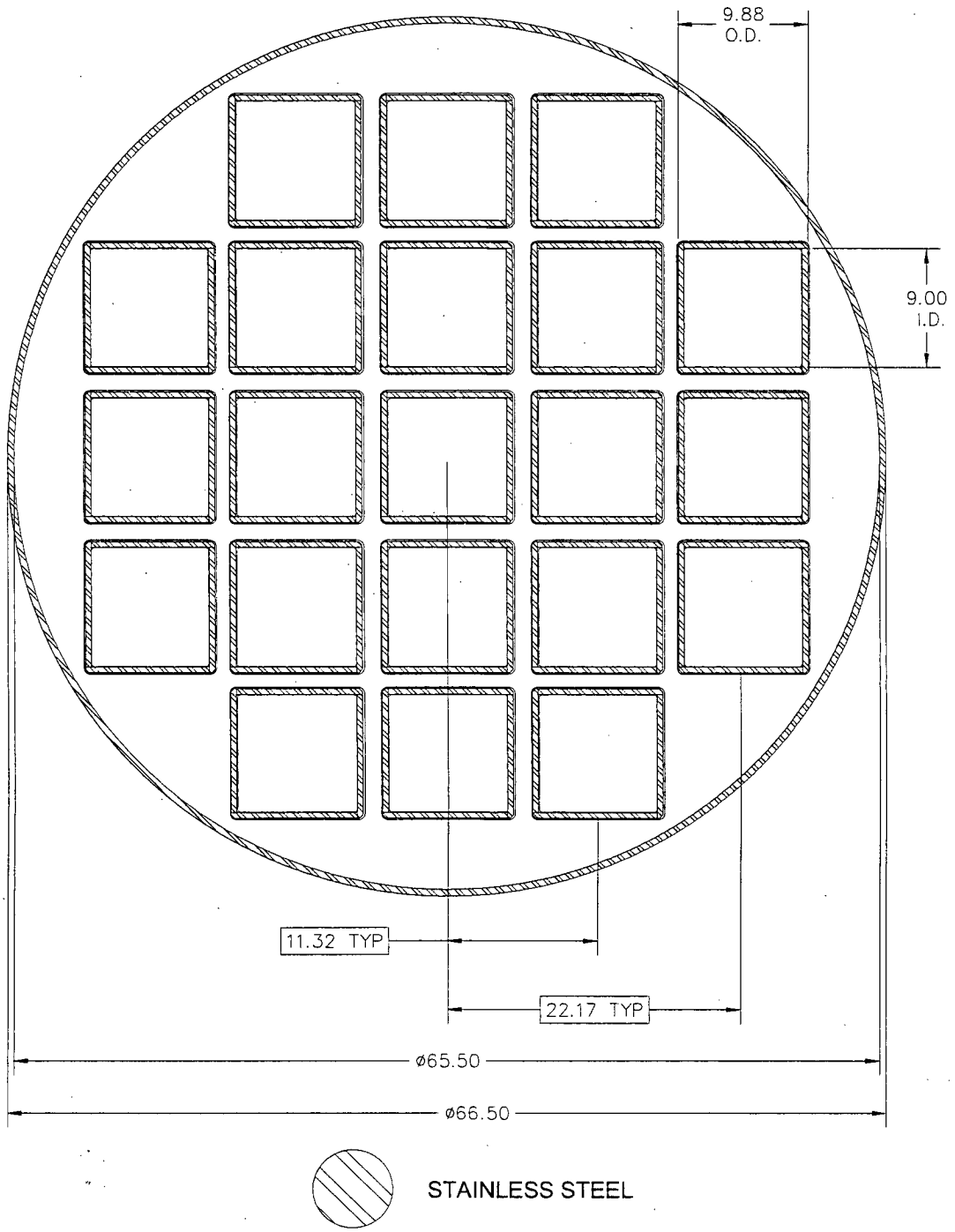

Dimensions in inches.

Figure 5.A.7.3-2 Basket within Canister – Axial Detail

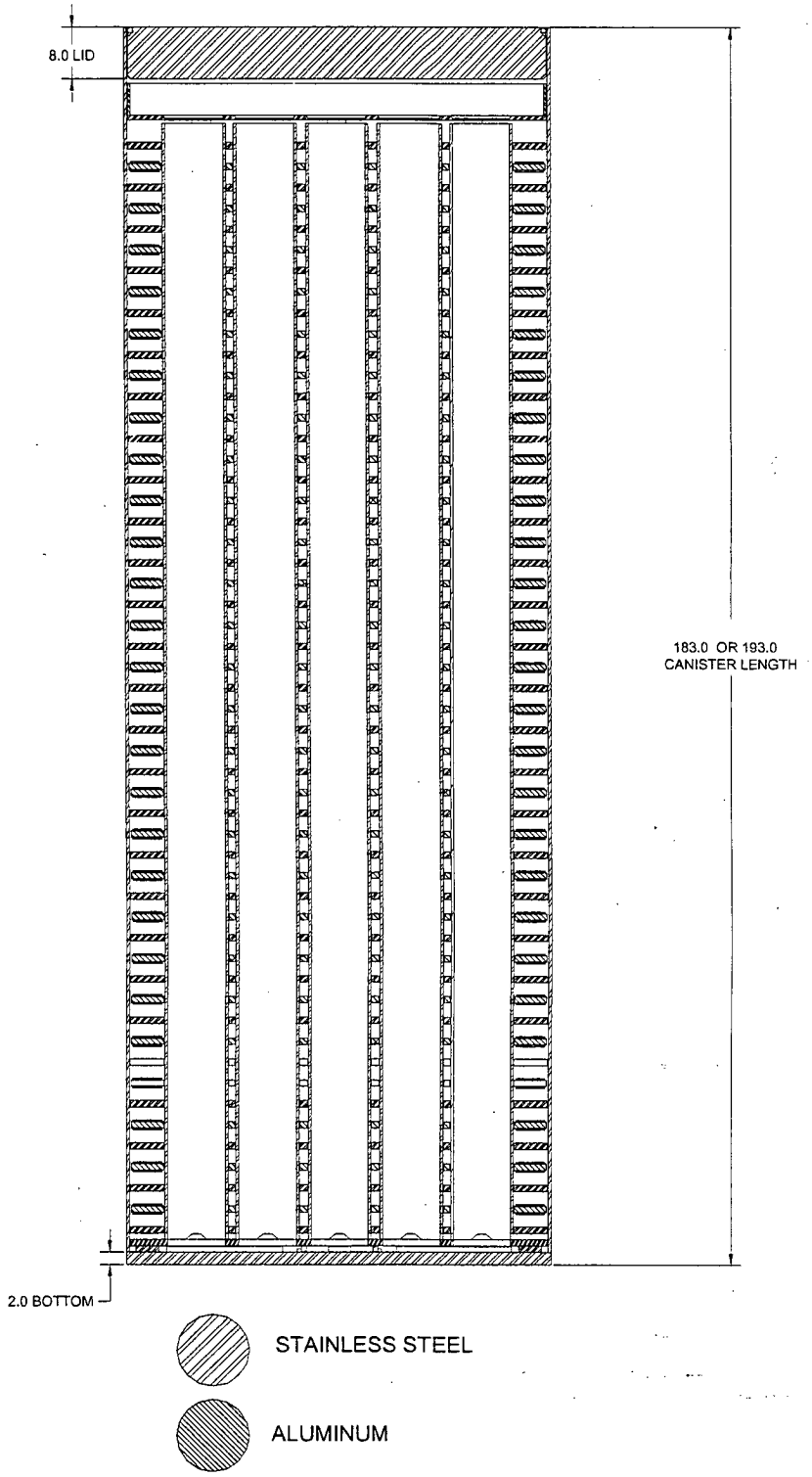

Dimensions in inches.

Figure 5.A.7.3-3 Transfer Cask Side Dose Rate Profiles

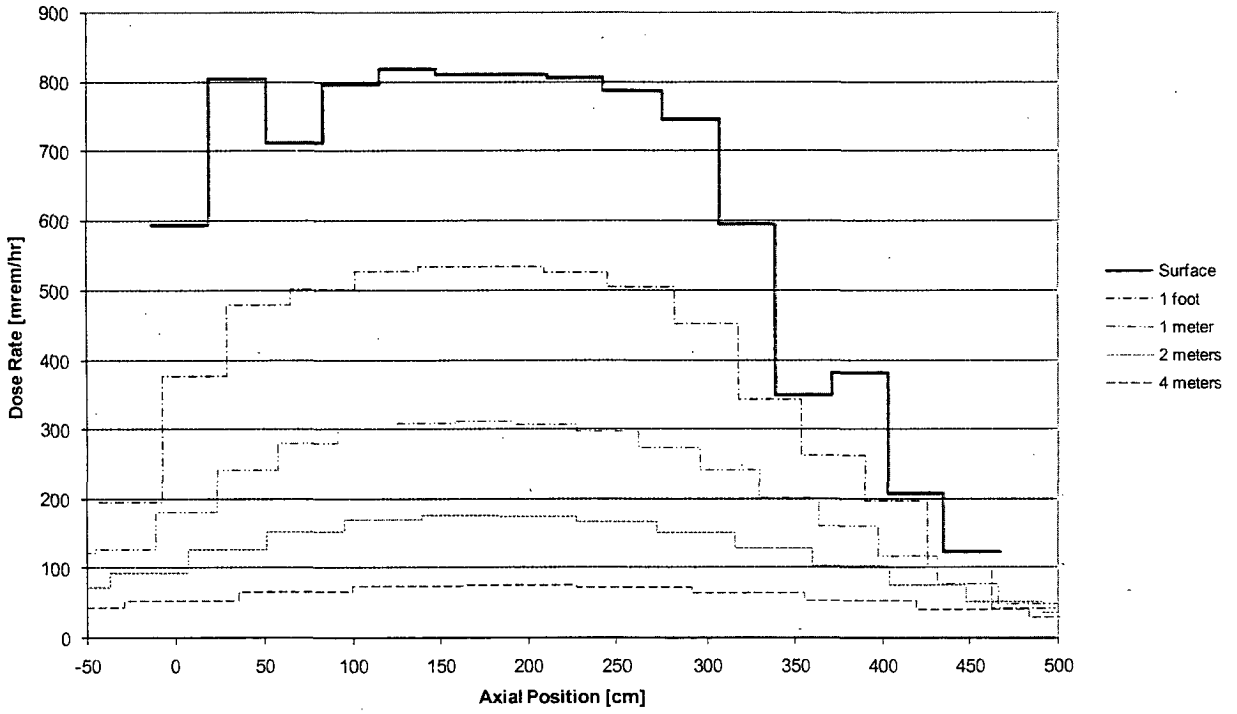

Figure 5.A.7.3-4 Transfer Cask Side Surface Dose Rate Profile by Source

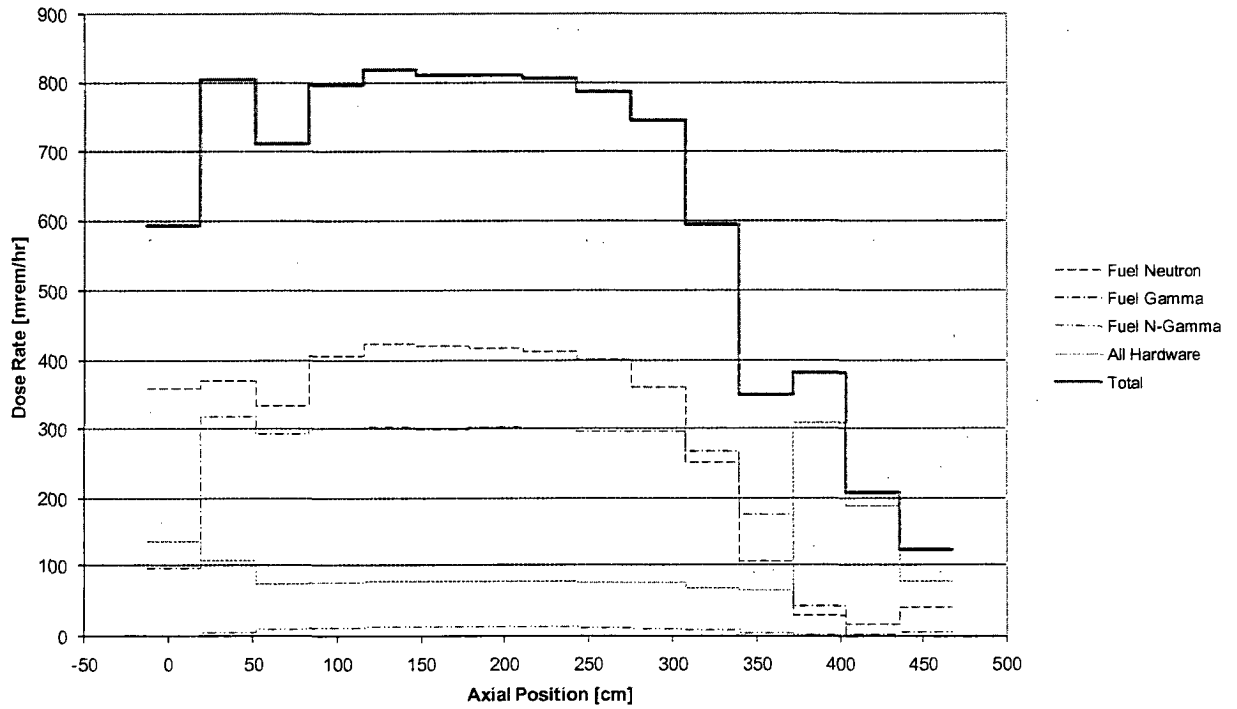

Figure 5.A.7.3-5 Transfer Cask Top Dose Rate Profiles

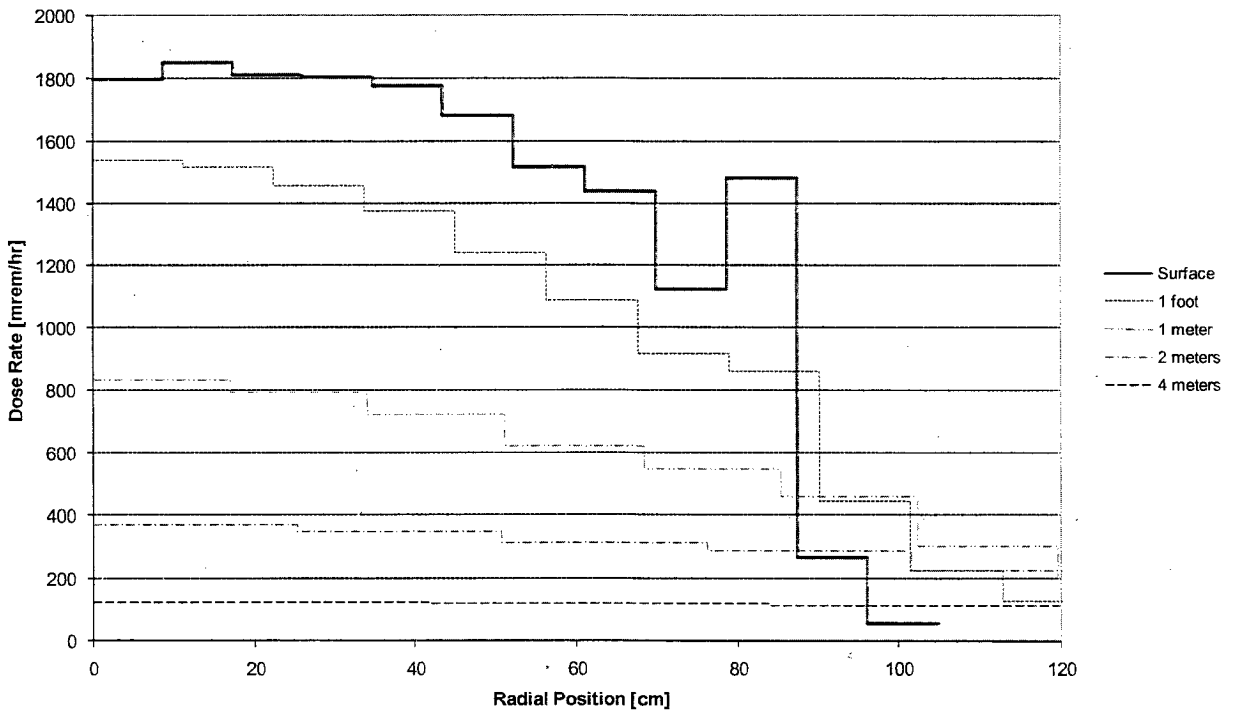

Figure 5.A.7.3-6 Transfer Cask Top Surface Dose Rate Profile by Source

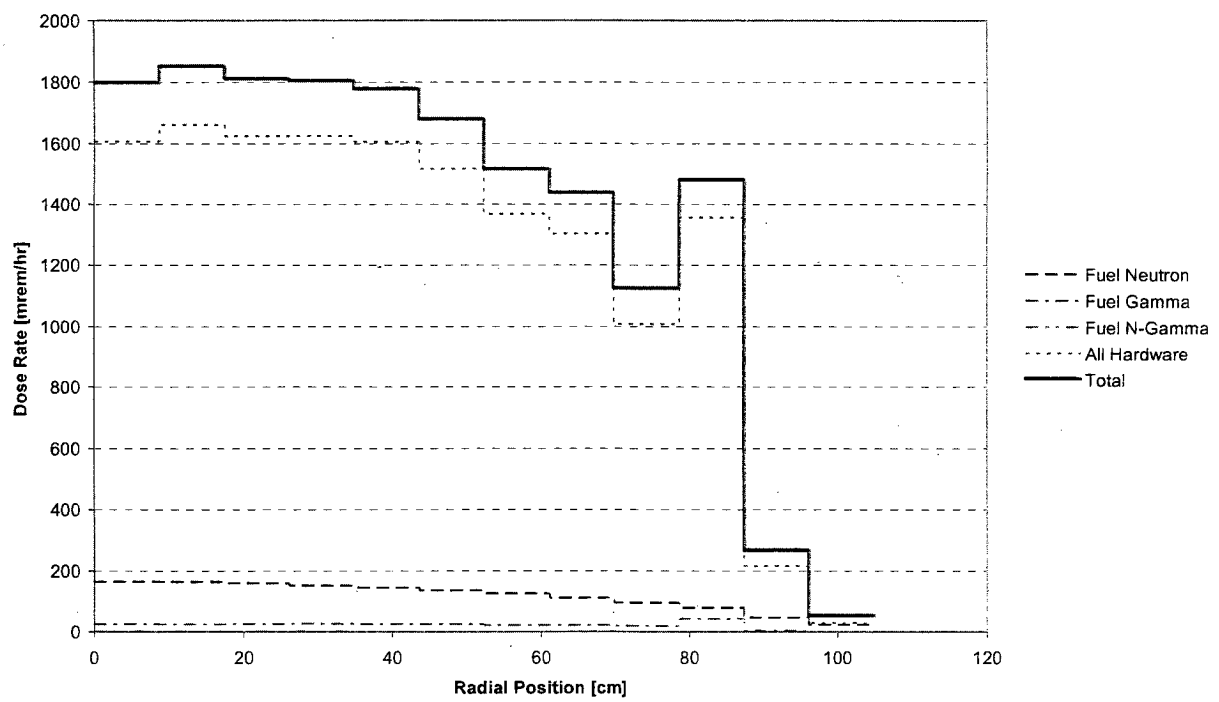

Figure 5.A.7.3-7 Transfer Cask Bottom Dose Rate Profiles

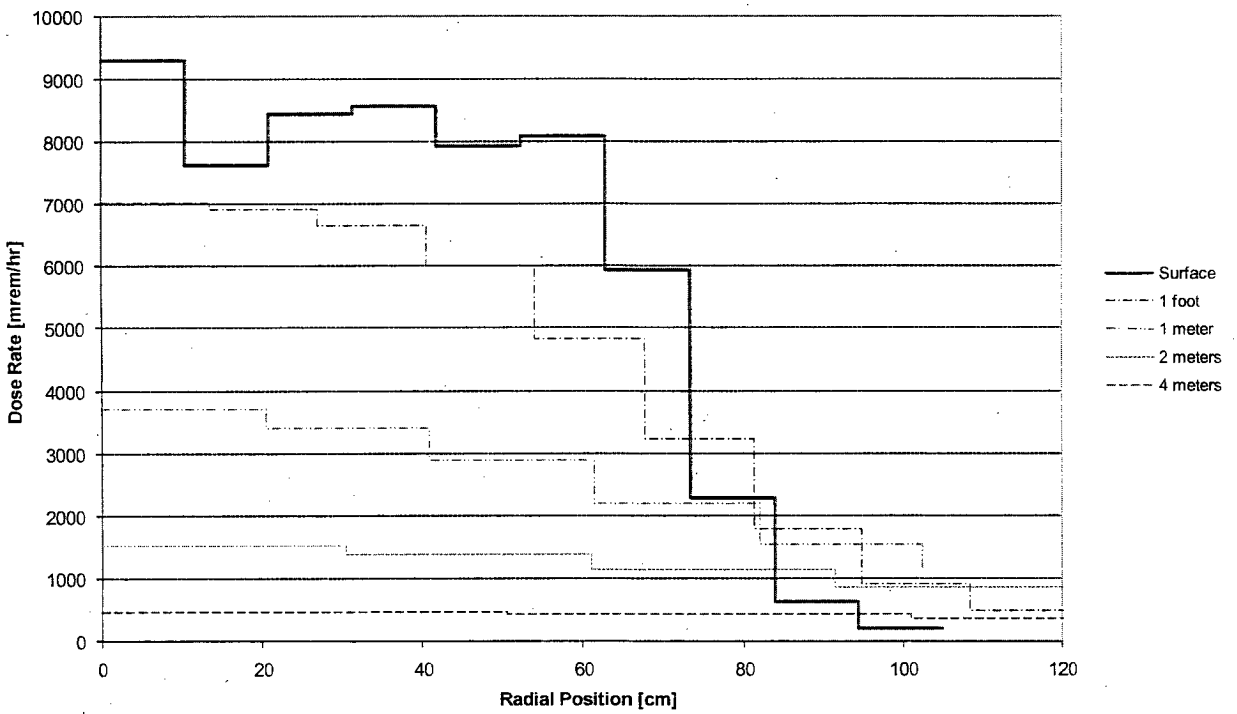

Figure 5.A.7.3-8 Transfer Cask Bottom Surface Dose Rate Profile by Source

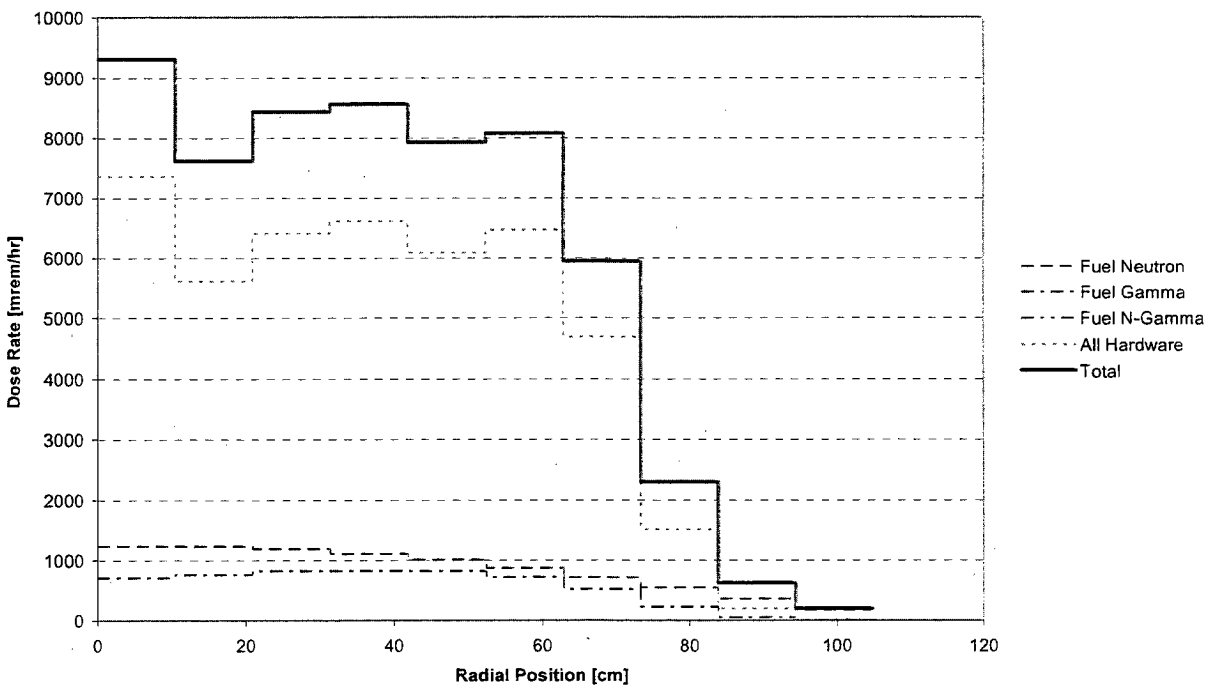

Figure 5.A.7.3-9 Concrete Cask Side Dose Rate Profiles

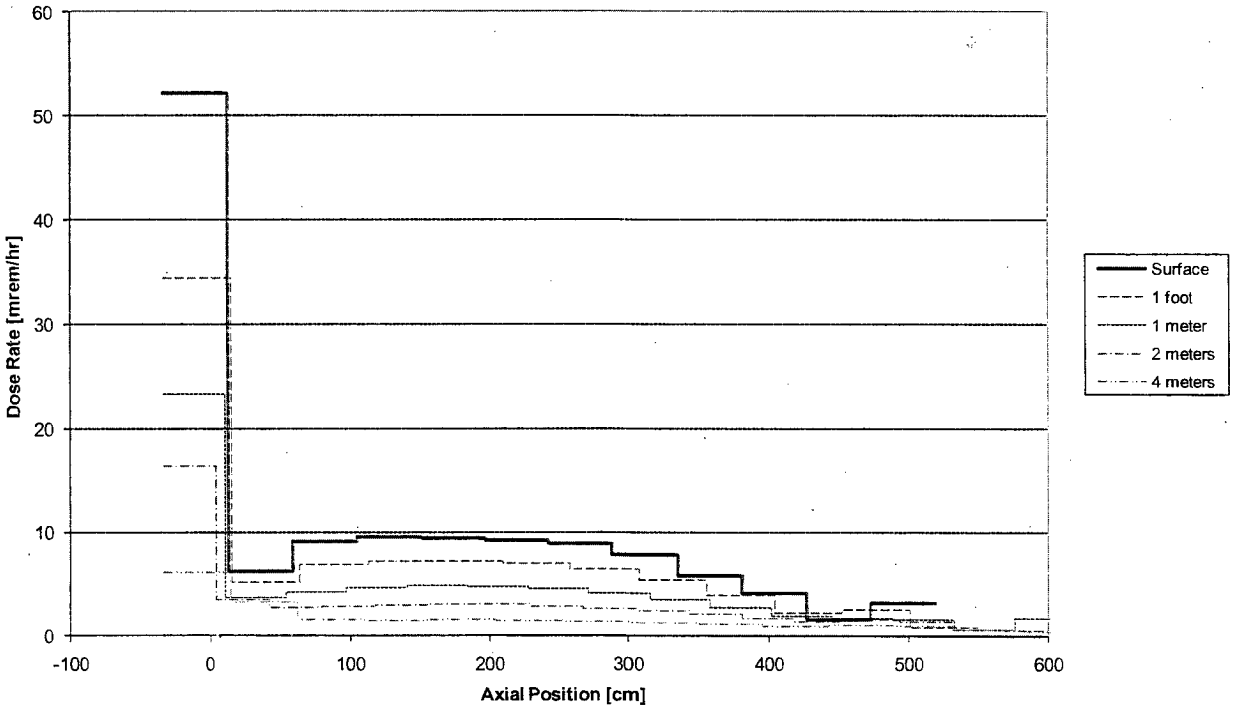

Figure 5.A.7.3-10 Concrete Cask Side Surface Dose Rate Profile by Source

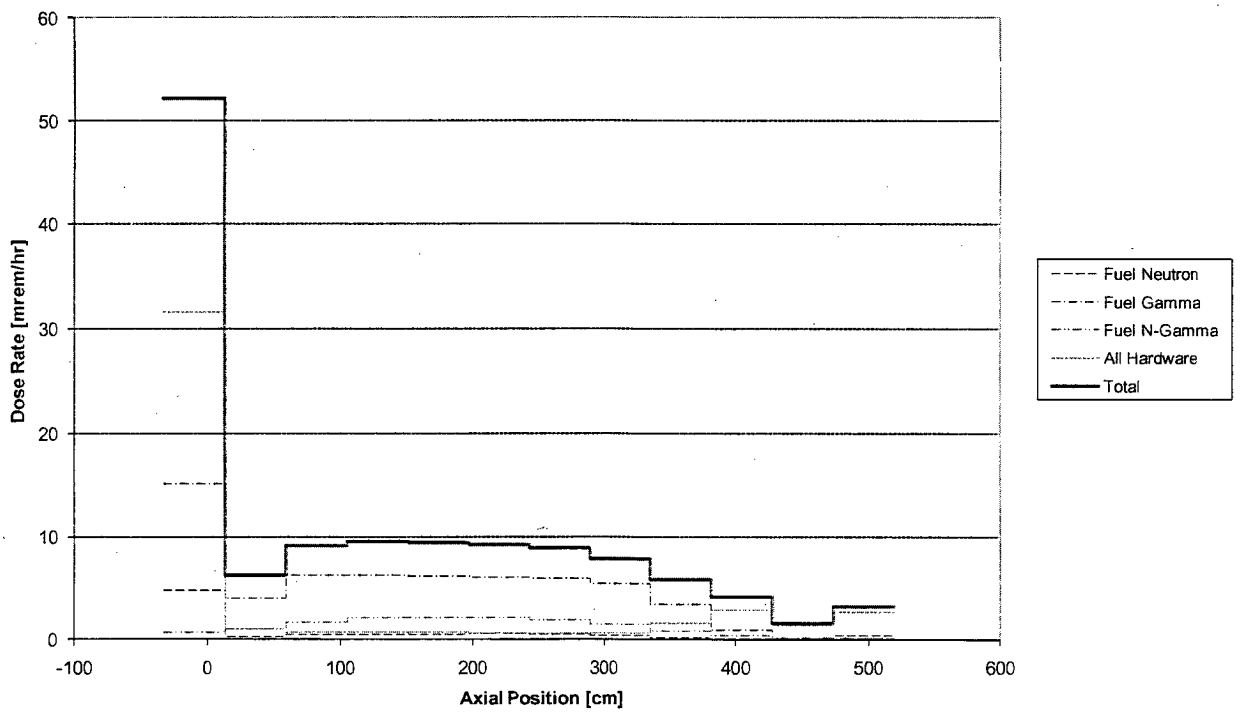

Figure 5.A.7.3-11 Concrete Cask Top Dose Rate Profiles

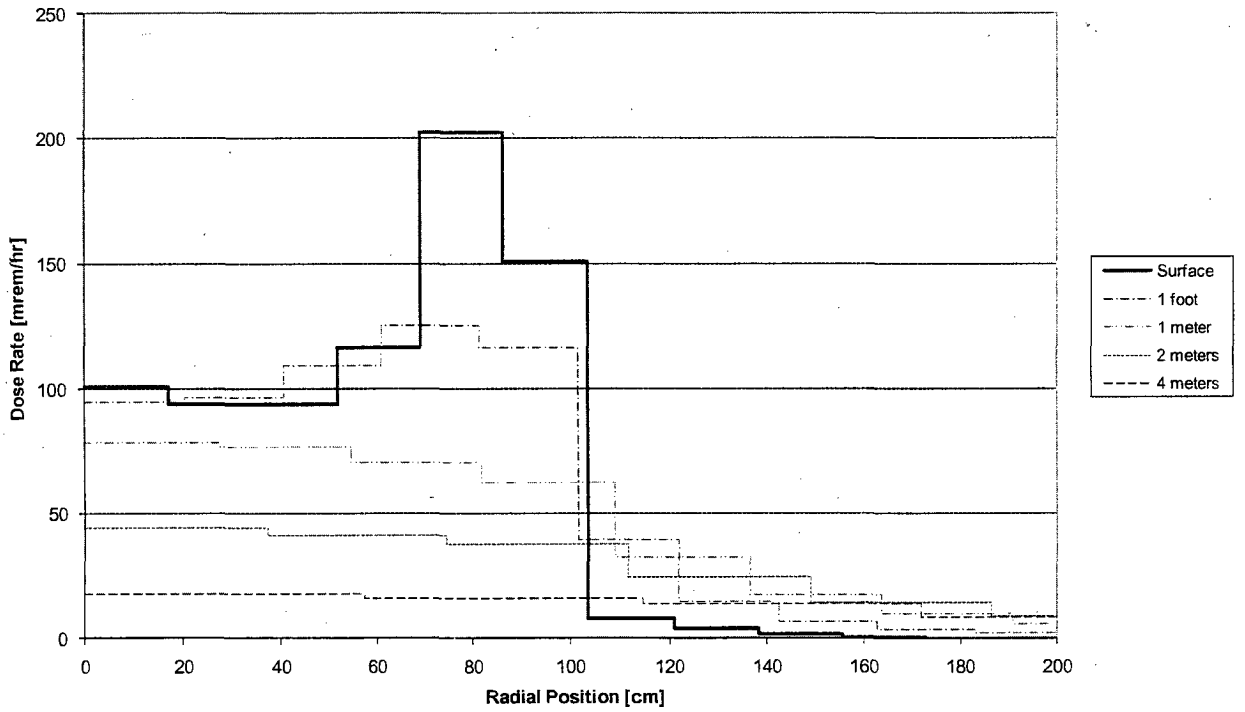

Figure 5.A.7.3-12 Concrete Cask Top Surface Dose Rate Profile by Source

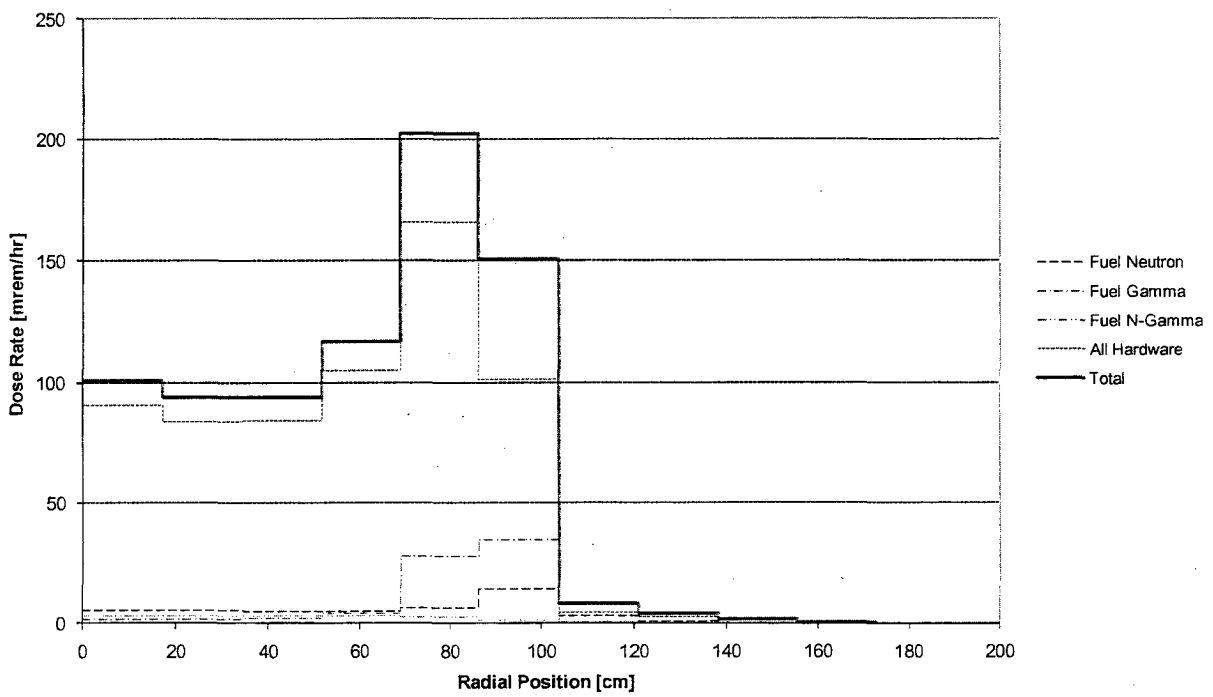

Figure 5.A.7.3-13 Concrete Cask Air Outlet Elevation Dose Rate Profile

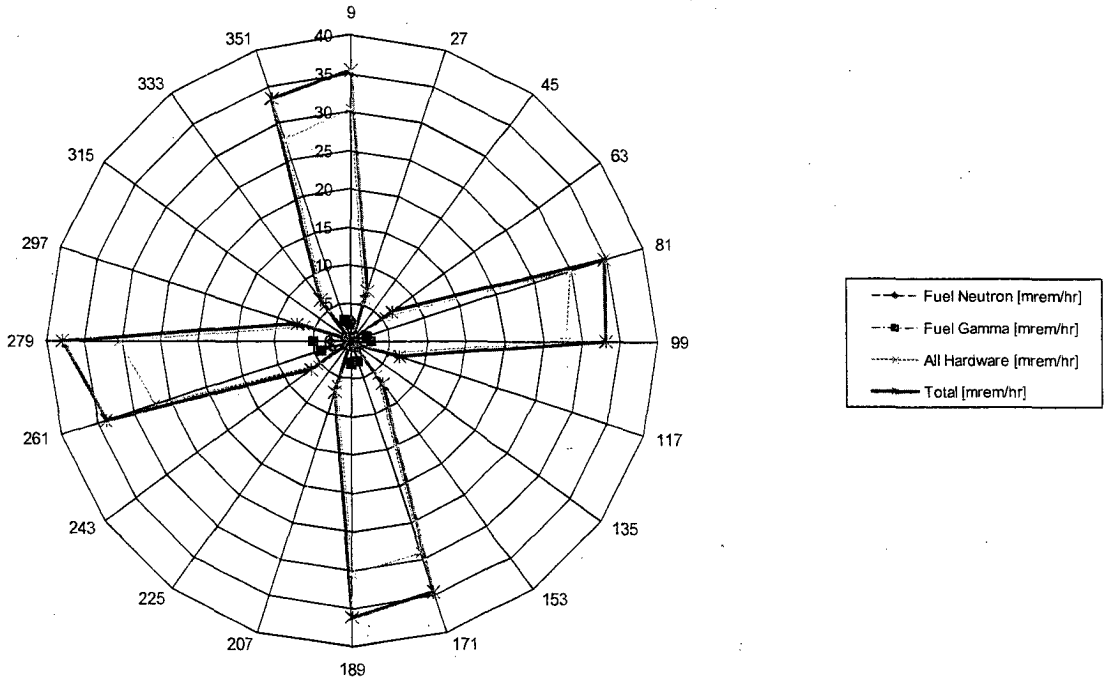

Figure 5.A.7.3-14 Concrete Cask Air Inlet Elevation Dose Rate Profile

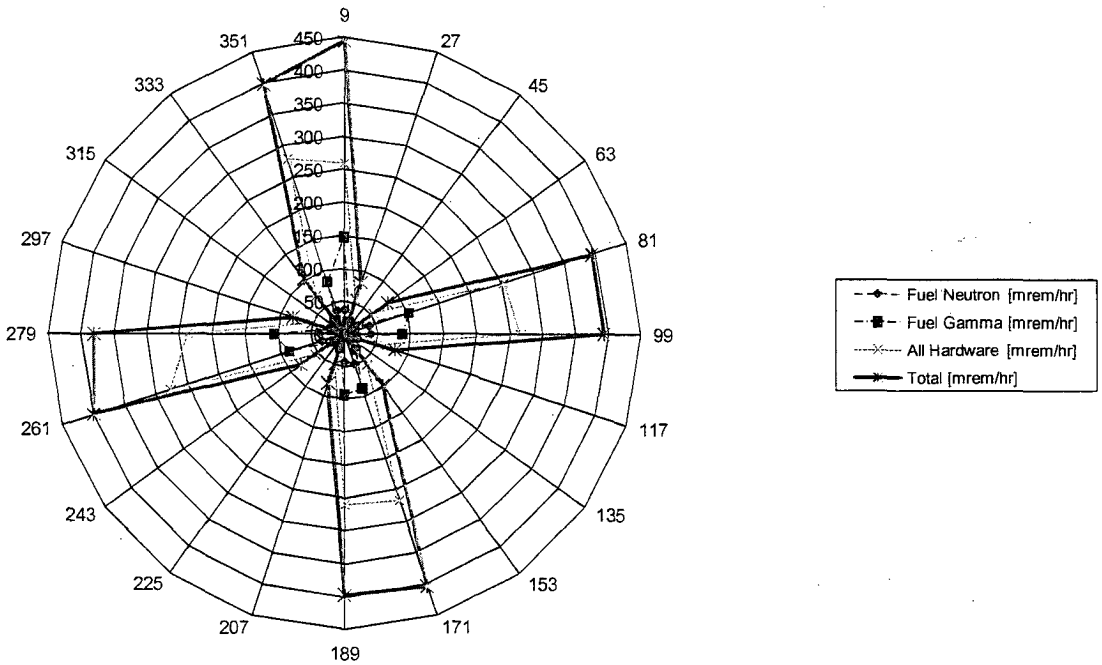

Figure 5.A.7.3-15 Single Cask Exposure vs. Distance

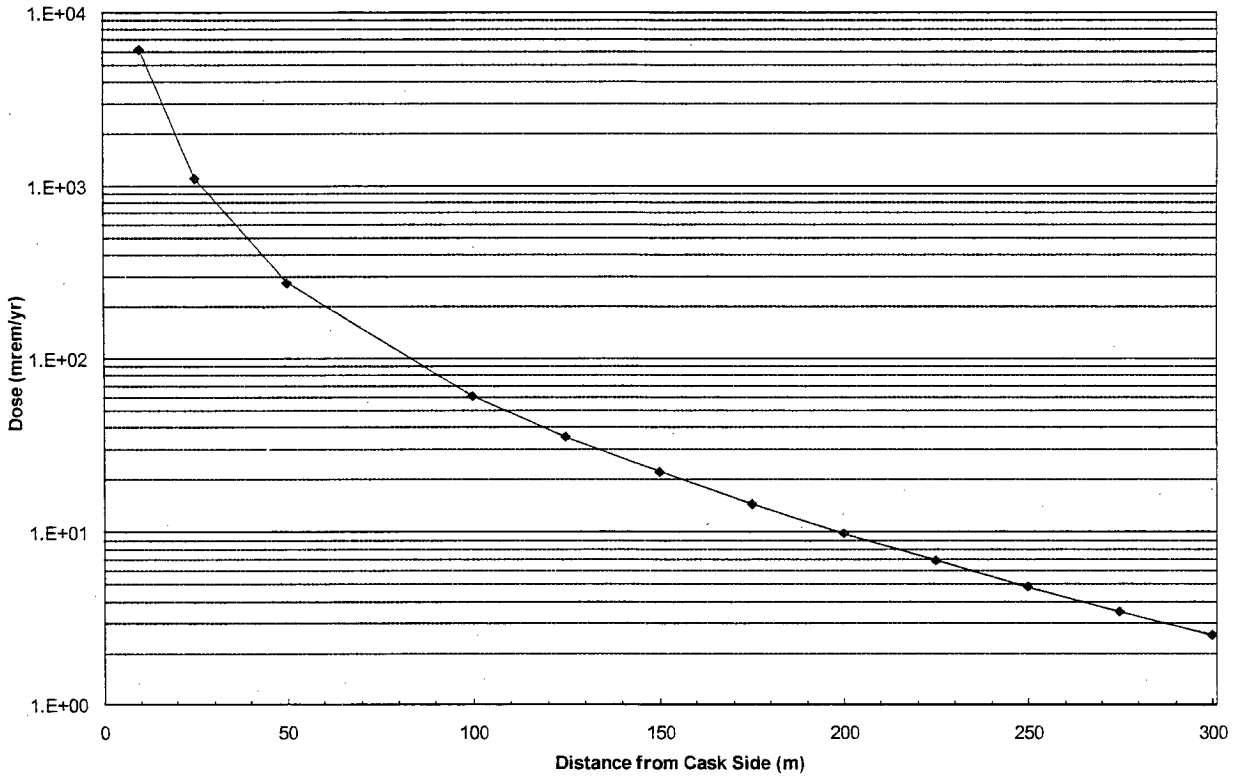

Distance (m)	Dose Rate (mrem/year)					
	Radial Gamma	Radial Neutron	Axial Gamma	Axial Neutron	Total N-Gamma	Total
10	5.43E+03	2.52E+02	7.72E+01	1.04E+01	4.13E+02	6.18E+03
25	1.01E+03	5.32E+01	4.26E+01	5.90E+00	1.53E-01	1.12E+03
50	2.37E+02	1.49E+01	2.16E+01	3.00E+00	7.95E-03	2.77E+02
100	4.80E+01	3.71E+00	7.92E+00	1.07E+00	2.52E-03	6.08E+01
125	2.74E+01	2.24E+00	5.17E+00	6.85E-01	2.27E-03	3.54E+01
150	1.68E+01	1.43E+00	3.46E+00	4.51E-01	2.09E-03	2.22E+01
175	1.09E+01	9.53E-01	2.36E+00	3.04E-01	2.01E-03	1.45E+01
200	7.33E+00	6.54E-01	1.63E+00	2.08E-01	1.89E-03	9.83E+00
225	5.08E+00	4.60E-01	1.14E+00	1.45E-01	1.80E-03	6.83E+00
250	3.60E+00	3.29E-01	8.06E-01	1.02E-01	1.70E-03	4.84E+00
275	2.60E+00	2.40E-01	5.73E-01	7.32E-02	1.60E-03	3.49E+00
300	1.91E+00	1.78E-01	4.11E-01	5.30E-02	1.49E-03	2.55E+00

Figure 5.A.7.3-16 20-Cask Array Exposure vs. Distance

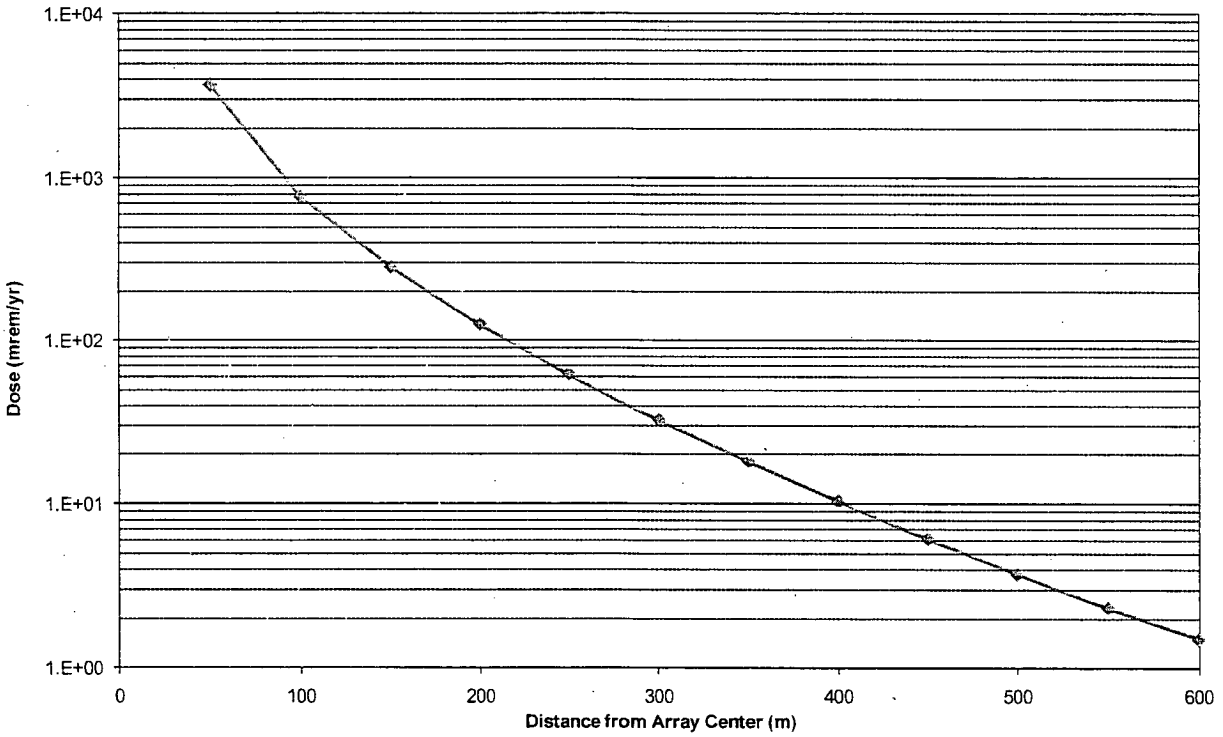

Distance (m)	Dose Rate (mrem/yr)					
	Radial Gamma	Radial Neutron	Axial Gamma	Axial Neutron	Total N-Gamma	Total
50	3.06E+03	1.43E+02	4.32E+02	6.05E+01	3.03E-01	3.70E+03
100	5.51E+02	3.28E+01	1.61E+02	2.18E+01	8.07E-02	7.67E+02
150	1.91E+02	1.29E+01	7.05E+01	9.22E+00	4.66E-02	2.83E+02
200	8.28E+01	6.12E+00	3.32E+01	4.25E+00	3.49E-02	1.26E+02
250	4.06E+01	3.21E+00	1.64E+01	2.09E+00	2.88E-02	6.24E+01
300	2.15E+01	1.80E+00	8.37E+00	1.08E+00	2.40E-02	3.28E+01
350	1.21E+01	1.06E+00	4.36E+00	5.83E-01	1.99E-02	1.81E+01
400	7.06E+00	6.54E-01	2.33E+00	3.26E-01	1.63E-02	1.04E+01
450	4.27E+00	4.14E-01	1.26E+00	1.88E-01	1.31E-02	6.15E+00
500	2.67E+00	2.69E-01	6.96E-01	1.11E-01	1.03E-02	3.76E+00
550	1.71E+00	1.79E-01	3.89E-01	6.74E-02	8.05E-03	2.35E+00
600	1.12E+00	1.21E-01	2.21E-01	4.17E-02	6.17E-03	1.51E+00

Figure 5.A.7.3-17 Contour of the Controlled Area Boundary for the 2×10 Cask Array

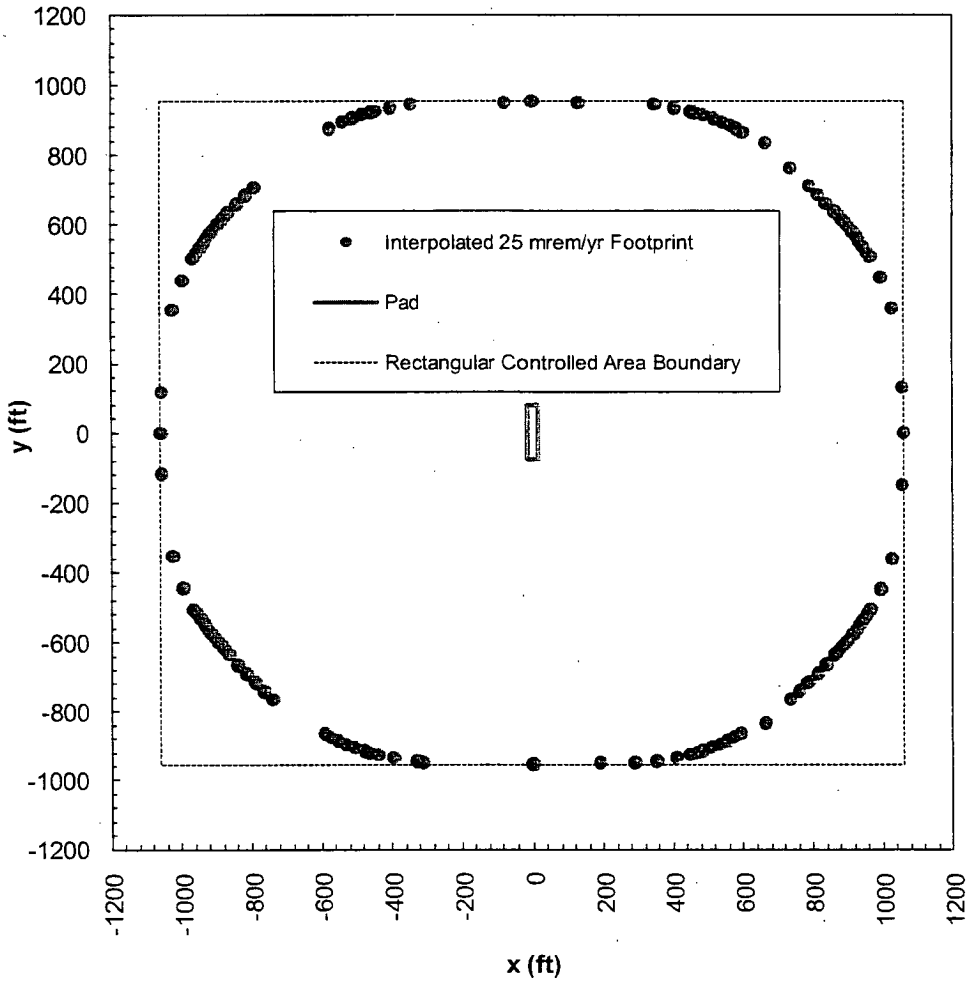

Table 5.A.7.3-1 Sample Fuel Homogenization – 17a Assembly

Component	Area [cm^2]	Area Fraction	Volume Fraction of Components		
			UO_2	Void	Clad
Fuel	1.3913E+02	3.0375E-01	3.0375E-01		
Gap	5.6649E+00	1.2367E-02		1.2367E-02	
Clad	4.2318E+01	9.2389E-02			9.2389E-02
Guide Tube	3.4075E+00	7.4392E-03			7.4392E-03
Instrument Tube	1.4198E-01	3.0997E-04			3.0997E-04
Inside Tubes	2.5881E+01	5.6502E-02		5.6502E-02	
Interstitial[a]	2.4150E+02	5.2725E-01		5.2725E-01	
Total	458.05	1.0000E+00	3.0375E-01	5.9612E-01	1.0014E-01

Table 5.A.7.3-2 Sample Nonfuel Homogenizations– 17a Assembly

Region	Assy Mass SS [kg/assy]	SS Volume [cm^3/assy]	Modeled Dimensions		Volume Fraction
			Height [cm]	Volume [cm^3/assy]	
Lower Nozzle	5.90	7.4307E+02	6.8580	3.1413E+03	2.3655E-01
Lower Plenum[b]	0.00	0.0000E+00	1.7399	7.9696E+02	0.0000E+00
Fuel Hardware	5.44	6.8514E+02	365.7600	1.6754E+05	4.0895E-03
Upper Plenum	5.41	6.8086E+02	22.2123	1.0174E+04	6.6919E-02
Upper Nozzle	7.85	9.8866E+02	9.3218	4.2698E+03	2.3155E-01

Table 5.A.7.3-3 Key Basket Geometry Features

Feature	Material	Dimension
Tube	Borated Stainless Steel[c]	9.88 in outer width, 0.44 in thick
Support Disk	Stainless Steel	1.0 in thick
Heat Transfer Disk	Aluminum	1.0 in thick
Top Weldment Disk	Stainless Steel	0.75 in thick
Bottom Weldment Disk	Stainless Steel	1.0 in long
Disk Opening	--	10.1 in width

[a] Space in fuel assembly width envelope outside fuel rods, guide tubes, and instrument tube.
[b] Represents the fuel rod end-cap.
[c] Conservatively modeled as stainless steel without boron.

Table 5.A.7.3-4 Sample Minimum Cool Time Solution[a]

Parameter	Value
5 yr Cool Time Heat Load	25.25 W
6 yr Cool Time Heat Load	21.68 W
Minimum Cool Time[b]	5.07 yr
Rounded Limit	5.1 yr
Canister Heat Load at Limit	24.89 kW

Table 5.A.7.3-5 Fuel Loading Table

Minimum Initial Assembly Avg. Enrichment wt % ^{235}U (E)	40 < Assembly Average Burnup ≤ 45 GWd/MTU Minimum Cooling Time (years)							
	CE 14×14	WE 14×14	WE 15×15	B&W 15×15	Pal. 15×15	CE 16×16	WE 17×17	B&W 17×17
2.7 ≤ E < 2.9	5.0	5.0	5.4	5.6	5.0	5.1	5.5	5.5
2.9 ≤ E < 3.1	5.0	5.0	5.3	5.5	5.0	5.0	5.4	5.4
3.1 ≤ E < 3.3	5.0	5.0	5.2	5.4	5.0	5.0	5.3	5.3
3.3 ≤ E < 3.5	5.0	5.0	5.1	5.3	5.0	5.0	5.3	5.3
3.5 ≤ E < 3.7	5.0	5.0	5.1	5.3	5.0	5.0	5.2	5.2
3.7 ≤ E < 3.9	5.0	5.0	5.0	5.2	5.0	5.0	5.1	5.1
3.9 ≤ E < 4.1	5.0	5.0	5.0	5.1	5.0	5.0	5.1	5.0
4.1 ≤ E < 4.3	5.0	5.0	5.0	5.0	5.0	5.0	5.0	5.0
4.3 ≤ E < 4.5	5.0	5.0	5.0	5.0	5.0	5.0	5.0	5.0
4.5 ≤ E < 4.7	5.0	5.0	5.0	5.0	5.0	5.0	5.0	5.0
4.7 ≤ E < 4.9	5.0	5.0	5.0	5.0	5.0	5.0	5.0	5.0
E ≥ 4.9	5.0	5.0	5.0	5.0	5.0	5.0	5.0	5.0

[a] 17a fuel at 45 GWd/MTU and 3.7 wt % ^{235}U.
[b] Conservatively based on a linear interpolation of the exponential decay curve

Table 5.A.7.3-6 Maximum Transfer Cask Surface Dose Rates

Surface	Fuel Type	Cool Time (yrs)	Assembly Avg. Burnup (GWd/MTU)	Initial Enrichment (wt% ^{235}U)	Maximum Dose Rate (mrem/hr)	Average Dose Rate (mrem/hr)
Radial	15a	5.4	45	2.7	821	624
Top	17b	5.5	45	2.7	1854	1104
Bottom	14b	5.0	45	2.7	9316	4208

Table 5.A.7.3-7 Maximum Concrete Cask Surface Dose Rates

Surface	Fuel Type	Cool Time (yrs)	Assembly Avg. Burnup (GWd/MTU)	Initial Enrichment (wt% ^{235}U)	Maximum Dose Rate (mrem/hr)	Average Dose Rate (mrem/hr)
Radial	14b	5.0	45	2.7	52.3	10.6
Top	17b	5.5	45	2.7	202.5	53.4
Air Inlet	14b	5.0	45	2.7	383.0	--
Air Outlet	17b	5.5	45	2.7	33.8	--

Table 5.A.7.3-8 Concrete Cask Bounding Surface Currents

Surface	Fuel Type	Cool Time (yrs)	Assembly Avg. Burnup (GWd/MTU)	Initial Enrichment (wt% ^{235}U)	Neutron Source (n/sec)	Gamma Source (γ/sec)
Radial	14b	5.0	45	2.7	2.732E+07	6.775E+09
Top	17b	5.5	45	2.7	1.565E+07	5.223E+09

Table 5.A.7.3-9 Rectangular Controlled Area Boundary for the 2×10 Cask Array

Direction Basis	Distance from the Center of the Array [ft]	Distance from the Center of the Array [m]
x direction (Perpendicular to Long Side of the Array)	1,061	323
y direction (Perpendicular to the Short Side of the Array)	954	291

5.A.7.4 Nonfuel Hardware Components – BPRA and Thimble Plug

The fuel assembly basket is designed to store nonfuel components inside the fuel assembly. Nonfuel components that may be stored include the following:

- BPRAs (Burnable Poison Rod Assemblies)
  Burnable poison rods are employed in the majority of PWR cores as either replacement rods for fuel rods, typical of CE cores, or as BPRAs in Westinghouse and B&W cores. BPRAs are composed of a set of rods made from an absorber material suspended from a spider structure located on the top-end fitting of the assembly. BPRAs are designed to reduce reactivity in fresh fuel, but may remain in a fuel assembly for more than one cycle. Potential BPRA source regions are the top-end fitting, top plenum and active fuel regions. The amount of activated material depends on the number of absorber (poison) rods attached to the BPRA and the material of the BPRA. Guide tube locations not occupied by absorber rods are typically occupied by short plug rods extending into the upper plenum region of the assembly. BPRA rods may be composed of activated material such as steel or a relatively inert material such as zirconium alloy. Table 5.A.7.4-1 provides a summary of Westinghouse 15×15 core BPRA types and the maximum regional masses chosen for the analysis. BPRAs for the remaining Westinghouse and B&W cores are treated similarly. A summary of BPRA characteristics for fuel placed into the transfer and storage systems is listed in Table 5.A.7.4-2. Poison rods replacing fuel rods are enveloped in the shielding analysis since they are typically constructed with a zirconium alloy clad and do not contain a significant amount of activated material, in particular compared to the fuel rod that they replace.

- Thimble Plugs
  Thimble plugs are similar to BPRAs in that they are attached to a spider resting on the end-fitting tie plate. Thimble plugs extend into the upper plenum region of the fuel assembly and block flow through the guide tubes during in-core operations. Thimble plug components do not extend into the active fuel region. They may be reused in multiple cycles and can experience significantly higher burnup than BPRAs. Thimble plug masses evaluated for each core are shown in Table 5.A.7.4-2.

5.A.7.4.1 Modeling Detail

Dose rates for BPRA and thimble plug components are estimated using fuel assembly response functions for the hardware source regions of interest. Credit is taken for the increased region masses and the associated increase in self-shielding. The BPRA and thimble plug activated

hardware is primarily composed of stainless steel. A 0.8 g/kg ^{59}Co impurity is applied against this material.

5.A.7.4.2 Dose Rate and Heat Load Impact

To minimize impact on onsite boundary and occupational dose evaluations, the minimum cool time for BPRAs and thimble plugs is set to 5 years to match the minimum fuel cool time. BPRAs are evaluated to a maximum burnup of 45 GWd/MTU, with thimble plug burnup being limited to an equivalent 180 GWd/MTU. The BPRAs and thimble plugs for each core configuration are independently evaluated.

5.A.7.4.2.1 BPRA

Maximum and average dose rate contributions from BPRAs on the Concrete Cask and Transfer Cask surfaces are listed in Table 5.A.7.4-3. The Concrete Cask radial profile for the BPRA is shown in Figure 5.A.7.4-1. The addition of the BPRA increases the maximum dose rates for a Westinghouse 14×14 assembly as demonstrated in Figure 5.A.7.4-1.

The maximum decay heat produced by a full cask load of BPRAs is 0.3 kW. For any of the fuel assemblies evaluated, an increase in cool time of less than 0.1 years provides the necessary heat load margin to accommodate the BPRAs. An increase in cool time will also decrease the fuel source term. Therefore, the strict application of increased fuel assembly minimum cool time without considering the corresponding reduction in fuel dose rates is conservative.

5.A.7.4.2.2 Thimble Plugs

Maximum and average dose rate contributions from thimble plugs on the Concrete Cask and Transfer Cask surfaces are listed in Table 5.A.7.4-4. The Concrete Cask axial profile for the thimble plugs is shown in Figure 5.A.7.4-2. The addition of the thimble plugs does not increase the maximum reported dose rates, as demonstrated in Figure 5.A.7.4-2, for a Westinghouse 14×14 assembly.

The maximum decay heat produced by a full cask load of thimble plugs is 0.05 kW. For any of the fuel assemblies evaluated, an increase in cool time of less than 0.1 years provides the necessary heat load margin to accommodate the thimble plugs. An increase in cool time will also decrease the fuel source term. Therefore, the strict application of increased fuel assembly minimum cool time without considering the corresponding reduction in fuel dose rates is conservative.

5.A.7.4.2.3 Combination of Fuel, BPRA, and Thimble Plug Dose Rates

Maximum system dose rates are reported for the combination of fuel and the maximum of BPRA or thimble plug dose rates. At each cask/detector surface combination, with the exception of the Concrete Cask and Transfer Cask sides, this combination is straightforward based on the hardware sources being the dominant contributor to the total. On the sides of the casks, the fuel sources comprise most of the total, and the elevation of the maximum dose rate due to fuel, BPRA and thimble plugs do not not coincide. As shown in the previous sections, BPRA loading has the potential to affect the maximum dose rate, while thimble plugs do not.

The combined maxima are listed as follows.

	Fuel		**Combined**	
Cask/Dose Location	**Assembly**	**Max. Dose Rate (mrem/hr)**	**Assembly**	**Max. Dose Rate (mrem/hr)**
Concrete Cask Top	B&W 17×17	202.5	B&W 17×17	285.7
Concrete Cask Radial	WE 14×14	52.3	WE 14×14	53.2
Concrete Cask Inlet	WE 14×14	383.0	WE 14×14	389.0
Concrete Cask Outlet	B&W 17×17	33.8	B&W 17×17	46.6
Transfer Cask Top	B&W 17×17	1854	B&W 17×17	2577
Transfer Cask Radial	WE 15×15	821	WE 15×15	883
Transfer Cask Bottom	WE 14×14	9316	WE 14×14	9438

Figure 5.A.7.4-1 BPRA Concrete Cask Radial Dose Rate Profiles

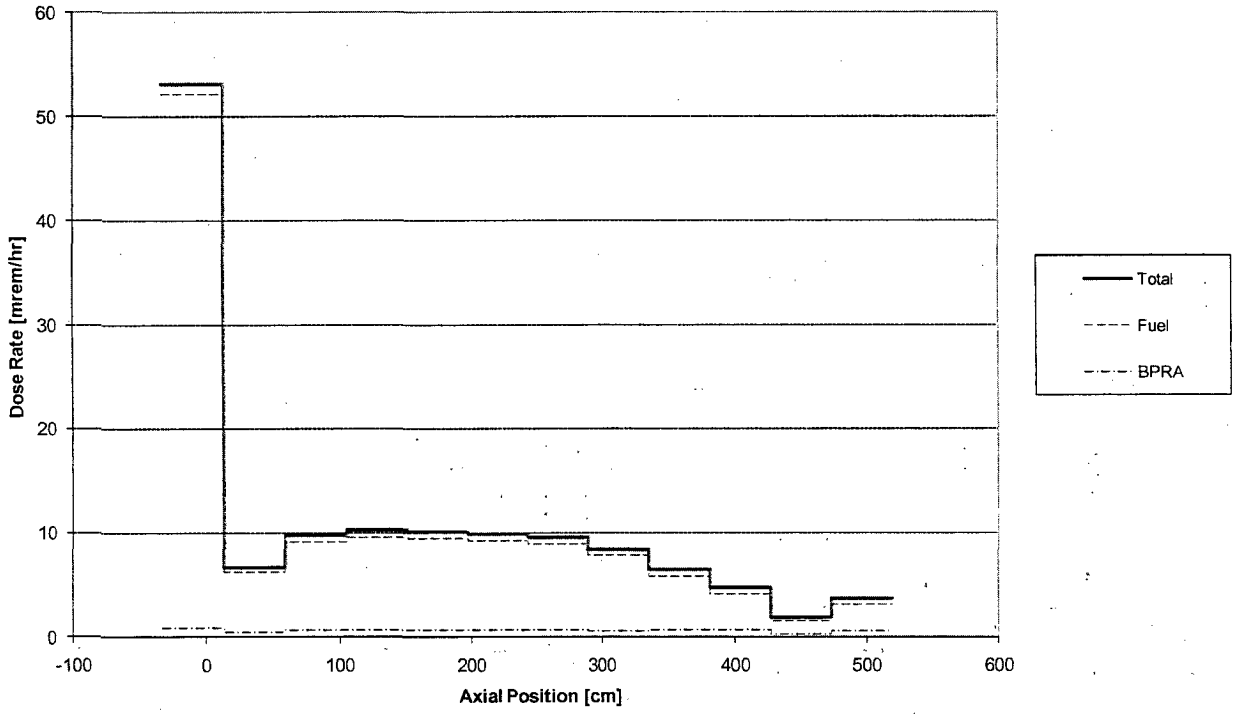

Figure 5.A.7.4-2 Thimble Plug Concrete Cask Radial Surface Dose Rate Profile

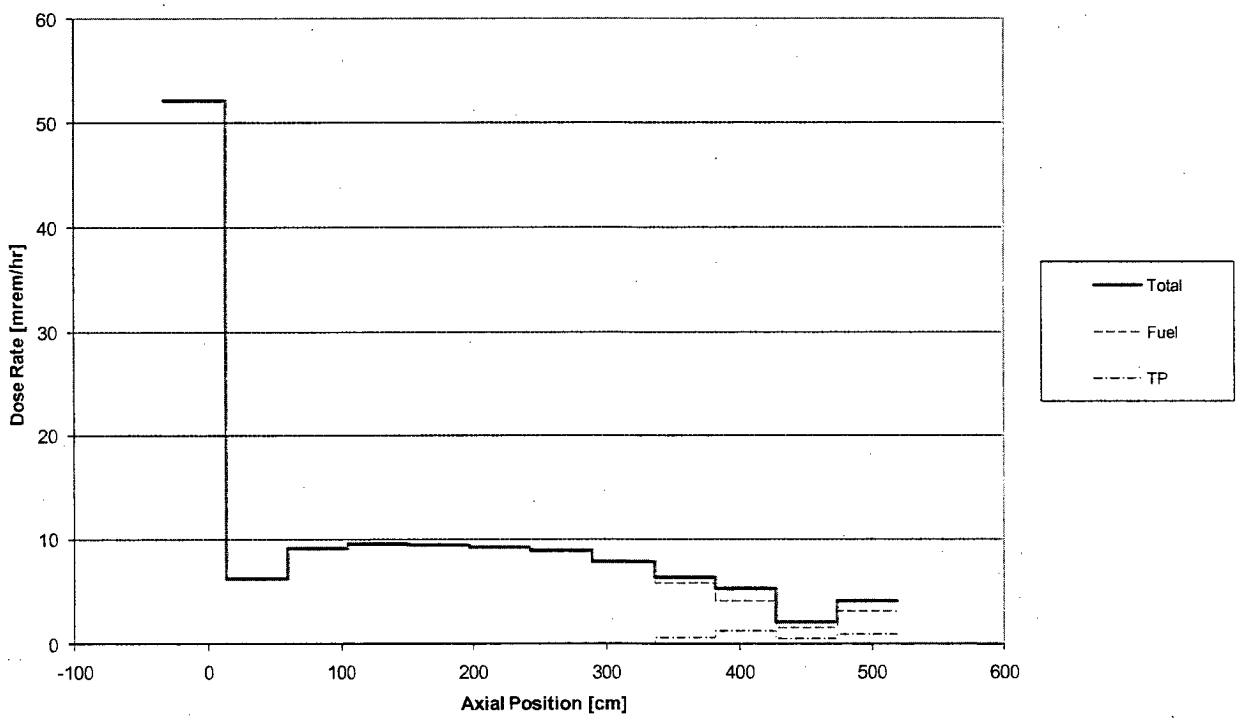

Table 5.A.7.4-1 Sample BPRA Hardware Summary – Westinghouse 15×15 Core

Absorber Type	Regional Stainless Steel/Inconel Mass (kg)		
	Upper End-Fitting	Upper Plenum	Active Fuel
Pyrex (4 rods)	2.14	1.78	2.28
Pyrex (5 rods)	2.16	1.68	2.85
Pyrex (6 rods)	2.18	1.58	3.42
Pyrex (13 rods)	2.33	0.88	7.48
Pyrex (16 rods)	2.39	0.58	9.11
Pyrex (20 rods)	2.47	0.18	11.39
WABA (4 rods)	2.23	2.18	0.00
WABA (6 rods)	2.24	1.91	0.00
WABA (8 rods)	2.26	1.63	0.00
WABA (12 rods)	2.30	1.09	0.00
WABA (16 rods)	2.33	0.54	0.00
Maximum	2.47	2.18	11.39

Table 5.A.7.4-2 Bounding Regional Nonfuel Hardware Masses

Assembly	Component	Regional Mass (kg)		
		Upper Nozzle	Upper Plenum	Active Fuel
Westinghouse 14×14	Thimble Plug	2.12	2.18	0
	BPRA	2.41	2.07	9.22
Westinghouse 15×15	Thimble Plug	2.19	2.72	0
	BPRA	2.47	2.18	11.39
Westinghouse 17×17	Thimble Plug	2.73	3.16	0
	BPRA	3.04	2.85	10.995
B&W 15×15	Thimble Plug	3.641	3.41	0
	BPRA	3.602	0	0
B&W 17×17	Thimble Plug	3.641	3.41	0
	BPRA	3.602	0	0

Table 5.A.7.4-3 BPRA Dose Rate Contributions – Westinghouse 17×17

Cask / Dose Location	Maximum Dose Rate (mrem/hr)	Average Dose Rate (mrem/hr)
Concrete Cask Top	39.1	10.0
Concrete Cask Radial	1.3	0.8
Concrete Cask Inlet	8.6	--
Concrete Cask Outlet	5.5	--
Transfer Cask Top	389.3	224.6
Transfer Cask Radial	127.5	56.9
Transfer Cask Bottom	213.8	96.4

Table 5.A.7.4-4 Thimble Plug Dose Rate Contributions – Westinghouse 17×17

Cask / Dose Location	Maximum Dose Rate (mrem/hr)	Average Dose Rate (mrem/hr)
Concrete Cask Top	75.3	19.0
Concrete Cask Radial	2.0	0.4
Concrete Cask Outlet	10.8	--
Transfer Cask Top	765.0	439.4
Transfer Cask Radial	263.2	29.1

5.A.7.5 Nonfuel Hardware Component – Control Element Assemblies (CEA)

CEA material quantities and the core region in which the material was exposed to the neutron activation flux were obtained from the DOE characteristics database. Bounding mass quantities activated in the assembly top and gas plenum regions are listed in Table 5.A.7.5-1 for the seven analyzed assembly configurations. Similar to the fuel assembly hardware evaluation, the plenum material is activated at a 0.2 flux factor, with top material activation at a 0.1 flux factor (0.05 for the CE 16×16 fuel). Material above the top is not considered to be activated to a significant extent and is, therefore, not modeled. In the shielding evaluation, the source material activated in the plenum region of the fuel assembly is located at the bottom of the active fuel region. This is the result of the full insertion of the CEA into the assembly under storage conditions. The CEA material classified as that in the top assembly region is modeled directly above CEA plenum region. To minimize the increased dose due to loading of CEAs, only the center nine basket locations are allowed to contain the added source.

CEA response functions are evaluated in groups 11 through 15 based on the significant energy lines of the Ag-In-Cd, inconel, and stainless steel light element spectra. The minimum cool time for CEAs is set uniformly at 10 years with a maximum exposure of 180 GWd/MTU.

Maximum CEA dose rates are calculated for the Westinghouse 17×17 bounding CEA description due to the significant amount of Ag-In-Cd and steel/inconel activated in the assembly upper plenum region. Results are shown in Table 5.A.7.5-2. On the side of the Transfer Cask, the additive dose rate does not affect the maximum dose rates. At the Concrete Cask side and inlets and the Transfer Cask bottom, loading of CEAs significantly increases the maximum dose rates.

The maximum decay heat produced by a loading of nine CEAs is 0.5 kW. For any of the fuel assemblies evaluated, an increase in cool time of less than 0.4 years provides the necessary margin to accommodate the CEAs. As an increase in cool time will also decrease the fuel source term, the strict application of increased cool time without a recalculation of fuel dose rates is conservative.

Table 5.A.7.5-1 Bounding CEA Descriptions

Material	Neutron Zone	CE 14×14	WE 14×14	WE 15×15	B&W 15×15	CE 16×16	WE 17×17	B&W 17×17
Steel/Inconel	Top	2.495	10.39	0.88	0.488	2.857	14.87	0.488
Ag-In-Cd	Top	0	0	0	1.581	1.089	0	1.581
Steel/Inconel	Gas Plenum	2.495	12.4	16.30	0.488	2.857	23.60	0.488
Ag-In-Cd	Gas Plenum	2.767	45.4	58.70	1.581	2.812	51.80	1.581

Table 5.A.7.5-2 CEA Dose Rate Contributions – Westinghouse 17×17

Cask / Dose Location	Maximum Dose Rate (mrem/hr)	Average Dose Rate (mrem/hr)
Concrete Cask Radial	16.4	1.4
Concrete Cask Inlet	139.1	--
Transfer Cask Radial	29.7	3.2
Transfer Cask Bottom	8522	3539

5.A.7.6 Sample Input Files

This section contains sample input files for the source term and shielding evaluations.

Sample Source Term Input Files

Figure 5.A.7.6-1 contains a sample SAS2H input file.

Transfer Cask Sample Shielding Input Files

A sample MCNP5 input file for the Transfer Cask is shown in Figure 5.A.7.6-2. As indicated previously in this chapter, shielding evaluations are performed using the response function method. Only one energy line is, therefore, defined in the source description.

Concrete Cask Sample Shielding Input Files

A sample MCNP5 input file is shown in Figure 5.A.7.6-3.

Sample NAC-CASC Input Files

Figure 5.A.7.6-4 contains a sample NAC-CASC model input file. Detector locations are truncated in the sample files.

Figure 5.A.7.6-1 Sample SAS2H Input File – Source Term

```
=SAS2H       PARM=(HALT03,SKIPSHIPDATA)
17a - 3.7 w/o U235, 45000 MWD/MTU, 5 - 16 years cool time
44GROUPNDF5 LATTICECELL
UO2         1 0.950 900 92235 3.7 92238 96.3 END
ZR 2 1.0 620. END
H2O         3 DEN=0.725 1.0 580 END
ARBM-BORMOD 0.725 1 1 0 0 5000 100 3 550.0E-6 580 END
ZR  4 1.0 580 END
H2O         5 DEN=0.725 0.9751 580 END
ZR  5 0.0249 580 END
END COMP
SQUAREPITCH 1.2598 0.8192 1 3 0.9500 2 0.8357 0 END
NPIN=264 FUEL=365.760 NCYC=3 NLIB=1 PRIN=6 LIGH=5
INPL=1 NUMH=24 NUMI=1 MXTUBE=4 ORTU=0.6121 SRTU=0.5740 END
POWER=18.5535 BURN=377.6050 DOWN=60 END
POWER=18.5535 BURN=377.6050 DOWN=60 END
POWER=18.5535 BURN=377.6050 DOWN=1461 END
FE 0.6738 CR 0.1900 NI 0.1150 MN 0.0200 CO 0.0012
END
=ORIGENS
0$$  A4 21 A8 26 A10 51 71  E
1$$  1 1T
COOLING 5 - 16 YEARS AND FISSION PRODUCT GAMMA REBIN
3$$  21 0 1 28 A33 22 E
54$$  A8 1 E T
35$$  0 T
56$$  0 9 A13 -2 5 3 E
57**  4.0 E T
COOLING 5 - 16 YEARS AND FISSION PRODUCT GAMMA REBIN
SINGLE REACTOR ASSEMBLY
60** 5.0 6.0 7.0 8.0 9.0 10.0 12.0 14.0 16.0
65$$  A4 1 A7 1 A10 1 A25 1 A28 1 A31 1 A46 1 A49 1 A52 1 E
61**  F.00000001
81$$  2 51 26 1 E
82$$  F6
83**  1.40e+7  1.20e+7  1.00e+7  8.00e+6   6.50e+6  5.00e+6
      4.00e+6  3.00e+6  2.50e+6  2.00e+6   1.66e+6  1.44e+6
      1.22e+6  1.00e+6  0.80e+6  0.60e+6   0.40e+6  0.30e+6
      0.20e+6  0.10e+6  0.05e+6  0.02e+6   0.01e+6
84**  1.46e+7  1.36e+7  1.25e+7  1.125e+7  1.00e+7
      8.25e+6  7.00e+6  6.07e+6  4.72e+6   3.68e+6
      2.87e+6  1.74e+6  0.64e+6  0.39e+6   0.11e+6
      6.74e+4  2.48e+4  9.12e+3  2.95e+3   9.61e+2
      3.54e+2  1.66e+2  4.81e+1  1.60e+1   4.00e+0
      1.50e+0  5.50e-1  7.09e-2  1.00e-5   T
56$$ F0  T
END
=ORIGENS
0$$  A4 21 A8 26 A10 51 71  E
1$$  1 1T
COOLING 5 - 16 YEARS AND ACTINIDE GAMMA REBIN
3$$  21 0 1 28 A33 22 E
54$$  A8 1 E T
35$$  0 T
56$$  0 9 A13 -2 5 3 E
57**  4.0 E T
COOLING 5 - 16 YEARS AND ACTINIDE GAMMA REBIN
SINGLE REACTOR ASSEMBLY
60** 5.0 6.0 7.0 8.0 9.0 10.0 12.0 14.0 16.0
65$$  A4 1 A7 1 A10 1 A25 1 A28 1 A31 1 A46 1 A49 1 A52 1 E
61**  F.00000001
81$$  2 51 26 1 E
82$$  F5
83**  1.40e+7  1.20e+7  1.00e+7  8.00e+6   6.50e+6  5.00e+6
      4.00e+6  3.00e+6  2.50e+6  2.00e+6   1.66e+6  1.44e+6
      1.22e+6  1.00e+6  0.80e+6  0.60e+6   0.40e+6  0.30e+6
      0.20e+6  0.10e+6  0.05e+6  0.02e+6   0.01e+6
84**  1.46e+7  1.36e+7  1.25e+7  1.125e+7  1.00e+7
      8.25e+6  7.00e+6  6.07e+6  4.72e+6   3.68e+6
      2.87e+6  1.74e+6  0.64e+6  0.39e+6   0.11e+6
      6.74e+4  2.48e+4  9.12e+3  2.95e+3   9.61e+2
      3.54e+2  1.66e+2  4.81e+1  1.60e+1   4.00e+0
      1.50e+0  5.50e-1  7.09e-2  1.00e-5   T
56$$ F0  T
END
```

Figure 5.A.7.6-1 Sample SAS2H Input File – Source Term

```
=ORIGENS
0$$  A4 21 A8 26 A10 51 71  E
1$$  1 1T
COOLING 5 - 16 YEARS AND LIGHT ELEMENT GAMMA REBIN
3$$  21 0 1 28 A33 22 E
54$$  A8 1 E T
35$$  0 T
56$$  0 9 A13 -2 5 3 E
57**  4.0 E T
COOLING 5 - 16 YEARS AND LIGHT ELEMENT GAMMA REBIN
SINGLE REACTOR ASSEMBLY
60** 5.0 6.0 7.0 8.0 9.0 10.0 12.0 14.0 16.0
65$$  A4 1 A7 1 A10 1 A25 1 A28 1 A31 1 A46 1 A49 1 A52 1 E
61**  F.00000001
81$$  2 51 26 1 E
82$$  F4
83**  1.40e+7  1.20e+7  1.00e+7  8.00e+6   6.50e+6  5.00e+6
      4.00e+6  3.00e+6  2.50e+6  2.00e+6   1.66e+6  1.44e+6
      1.22e+6  1.00e+6  0.80e+6  0.60e+6   0.40e+6  0.30e+6
      0.20e+6  0.10e+6  0.05e+6  0.02e+6   0.01e+6
84**  1.46e+7  1.36e+7  1.25e+7  1.125e+7  1.00e+7
      8.25e+6  7.00e+6  6.07e+6  4.72e+6   3.68e+6
      2.87e+6  1.74e+6  0.64e+6  0.39e+6   0.11e+6
      6.74e+4  2.48e+4  9.12e+3  2.95e+3   9.61e+2
      3.54e+2  1.66e+2  4.81e+1  1.60e+1   4.00e+0
      1.50e+0  5.50e-1  7.09e-2  1.00e-5   T
56$$ F0  T
END
```

Figure 5.A.7.6-2 Sample MCNP5 Input File – Transfer Cask

```
UNITAD Transfer Cask - trfShlDryTopFn_ng17a_07g
C Top Axial Biasing - Fuel Neutron Source
C Fuel Assembly Cells - ng17a
1 1 -1.8782 -1      u=6 $ Lower Nozzle
2 2 -2.6798 -2 +1     u=6 $ Lower Plenum
3 3 -3.8195 -3 +2     u=6 $ Fuel
4 4 -0.7412 -4 +3     u=6 $ Upper Plenum
5 5 -1.8385 -5 +4     u=6 $ Upper Nozzle
6 0          +5      u=6 $ Outside
C Cells - Fuel Tube
101 0          -101 fill=6 ( 0.0000 0.0000 0.0000 )   u=5 $ Tube void
102 7 -7.9400 -102 +101     u=5 $ Tube
103 0          +102 +101    u=5 $ Void
c Cell Cards - Disk Stack
201 7 -7.94 -204 trcl = ( 0.0000 0.0000 2.5400 )    u=4 $ Bottom weldment disk
202 7 -7.94 -201 trcl = ( 0.0000 0.0000 7.6200 )    u=4 $ Support disk 1
203 9 -2.70 -202 trcl = ( 0.0000 0.0000 15.8750 )    u=4 $ Heat transfer disk 1
204 like 202 but   trcl = ( 0.0000 0.0000 24.1300 )    u=4 $ Support disk 2
205 like 203 but   trcl = ( 0.0000 0.0000 32.3850 )    u=4 $ Heat transfer disk 2
206 like 202 but   trcl = ( 0.0000 0.0000 40.6400 )    u=4 $ Support disk 3
207 like 203 but   trcl = ( 0.0000 0.0000 48.8950 )    u=4 $ Heat transfer disk 3
208 like 202 but   trcl = ( 0.0000 0.0000 57.1500 )    u=4 $ Support disk 4
209 like 203 but   trcl = ( 0.0000 0.0000 65.4050 )    u=4 $ Heat transfer disk 4
210 like 202 but   trcl = ( 0.0000 0.0000 73.6600 )    u=4 $ Support disk 5
211 like 203 but   trcl = ( 0.0000 0.0000 81.9150 )    u=4 $ Heat transfer disk 5
212 like 202 but   trcl = ( 0.0000 0.0000 90.1700 )    u=4 $ Support disk 6
213 like 203 but   trcl = ( 0.0000 0.0000 98.4250 )    u=4 $ Heat transfer disk 6
214 like 202 but   trcl = ( 0.0000 0.0000 106.6800 )    u=4 $ Support disk 7
215 like 203 but   trcl = ( 0.0000 0.0000 114.9350 )    u=4 $ Heat transfer disk 7
216 like 202 but   trcl = ( 0.0000 0.0000 123.1900 )    u=4 $ Support disk 8
217 like 203 but   trcl = ( 0.0000 0.0000 131.4450 )    u=4 $ Heat transfer disk 8
218 like 202 but   trcl = ( 0.0000 0.0000 139.7000 )    u=4 $ Support disk 9
219 like 203 but   trcl = ( 0.0000 0.0000 147.9550 )    u=4 $ Heat transfer disk 9
220 like 202 but   trcl = ( 0.0000 0.0000 156.2100 )    u=4 $ Support disk 10
221 like 203 but   trcl = ( 0.0000 0.0000 164.4650 )    u=4 $ Heat transfer disk 10
222 like 202 but   trcl = ( 0.0000 0.0000 172.7200 )    u=4 $ Support disk 11
223 like 203 but   trcl = ( 0.0000 0.0000 180.9750 )    u=4 $ Heat transfer disk 11
224 like 202 but   trcl = ( 0.0000 0.0000 189.2300 )    u=4 $ Support disk 12
225 like 203 but   trcl = ( 0.0000 0.0000 197.4850 )    u=4 $ Heat transfer disk 12
226 like 202 but   trcl = ( 0.0000 0.0000 205.7400 )    u=4 $ Support disk 13
227 like 203 but   trcl = ( 0.0000 0.0000 213.9950 )    u=4 $ Heat transfer disk 13
228 like 202 but   trcl = ( 0.0000 0.0000 222.2500 )    u=4 $ Support disk 14
229 like 203 but   trcl = ( 0.0000 0.0000 230.5050 )    u=4 $ Heat transfer disk 14
230 like 202 but   trcl = ( 0.0000 0.0000 238.7600 )    u=4 $ Support disk 15
231 like 203 but   trcl = ( 0.0000 0.0000 247.0150 )    u=4 $ Heat transfer disk 15
232 like 202 but   trcl = ( 0.0000 0.0000 255.2700 )    u=4 $ Support disk 16
233 like 203 but   trcl = ( 0.0000 0.0000 263.5250 )    u=4 $ Heat transfer disk 16
234 like 202 but   trcl = ( 0.0000 0.0000 271.7800 )    u=4 $ Support disk 17
235 like 203 but   trcl = ( 0.0000 0.0000 280.0350 )    u=4 $ Heat transfer disk 17
236 like 202 but   trcl = ( 0.0000 0.0000 288.2900 )    u=4 $ Support disk 18
237 like 203 but   trcl = ( 0.0000 0.0000 296.5450 )    u=4 $ Heat transfer disk 18
238 like 202 but   trcl = ( 0.0000 0.0000 304.8000 )    u=4 $ Support disk 19
239 like 203 but   trcl = ( 0.0000 0.0000 313.0550 )    u=4 $ Heat transfer disk 19
240 like 202 but   trcl = ( 0.0000 0.0000 321.3100 )    u=4 $ Support disk 20
241 like 203 but   trcl = ( 0.0000 0.0000 329.5650 )    u=4 $ Heat transfer disk 20
242 like 202 but   trcl = ( 0.0000 0.0000 337.8200 )    u=4 $ Support disk 21
243 like 203 but   trcl = ( 0.0000 0.0000 346.0750 )    u=4 $ Heat transfer disk 21
244 like 202 but   trcl = ( 0.0000 0.0000 354.3300 )    u=4 $ Support disk 22
245 like 203 but   trcl = ( 0.0000 0.0000 362.5850 )    u=4 $ Heat transfer disk 22
246 like 202 but   trcl = ( 0.0000 0.0000 370.8400 )    u=4 $ Support disk 23
247 like 203 but   trcl = ( 0.0000 0.0000 379.0950 )    u=4 $ Heat transfer disk 23
248 like 202 but   trcl = ( 0.0000 0.0000 387.3500 )    u=4 $ Support disk 24
249 like 203 but   trcl = ( 0.0000 0.0000 395.6050 )    u=4 $ Heat transfer disk 24
250 like 202 but   trcl = ( 0.0000 0.0000 403.8600 )    u=4 $ Support disk 25
251 7 -7.94 -203 trcl = ( 0.0000 0.0000 420.3700 )    u=4 $ Top weldment disk
252 0                $ Outside disks
      #201 #202 #203 #204 #205 #206 #207 #208 #209 #210
      #211 #212 #213 #214 #215 #216 #217 #218 #219 #220
      #221 #222 #223 #224 #225 #226 #227 #228 #229 #230
      #231 #232 #233 #234 #235 #236 #237 #238 #239 #240
      #241 #242 #243 #244 #245 #246 #247 #248 #249 #250
      #251         u=4
c Cell Cards - Canister Cavity
301 0          -301 fill=5 ( -28.7528 56.8706 0.0000 )    $ Assembly 1
          trcl = ( -28.7528 56.8706 0.0000 )   u=3
```

Figure 5.A.7.6-2 Sample MCNP5 Input File – Transfer Cask

```
302 0          -301 fill=5 ( 0.0000 56.8706 0.0000 )    $ Assembly 2
          trcl = ( 0.0000 56.8706 0.0000 )   u=3
303 0          -301 fill=5 ( 28.7528 56.8706 0.0000 )    $ Assembly 3
          trcl = ( 28.7528 56.8706 0.0000 )   u=3
304 0          -301 fill=5 ( -56.8706 28.7528 0.0000 )    $ Assembly 4
          trcl = ( -56.8706 28.7528 0.0000 )   u=3
305 0          -301 fill=5 ( -28.7528 28.7528 0.0000 )    $ Assembly 5
          trcl = ( -28.7528 28.7528 0.0000 )   u=3
306 0          -301 fill=5 ( 0.0000 28.7528 0.0000 )    $ Assembly 6
          trcl = ( 0.0000 28.7528 0.0000 )   u=3
307 0          -301 fill=5 ( 28.7528 28.7528 0.0000 )    $ Assembly 7
          trcl = ( 28.7528 28.7528 0.0000 )   u=3
308 0          -301 fill=5 ( 56.8706 28.7528 0.0000 )    $ Assembly 8
          trcl = ( 56.8706 28.7528 0.0000 )   u=3
309 0          -301 fill=5 ( -56.8706 0.0000 0.0000 )    $ Assembly 9
          trcl = ( -56.8706 0.0000 0.0000 )   u=3
310 0          -301 fill=5 ( -28.7528 0.0000 0.0000 )    $ Assembly 10
          trcl = ( -28.7528 0.0000 0.0000 )   u=3
311 0          -301 fill=5 ( 0.0000 0.0000 0.0000 )    $ Assembly 11
          trcl = ( 0.0000 0.0000 0.0000 )   u=3
312 0          -301 fill=5 ( 28.7528 0.0000 0.0000 )    $ Assembly 12
          trcl = ( 28.7528 0.0000 0.0000 )   u=3
313 0          -301 fill=5 ( 56.8706 0.0000 0.0000 )    $ Assembly 13
          trcl = ( 56.8706 0.0000 0.0000 )   u=3
314 0          -301 fill=5 ( -56.8706 -28.7528 0.0000 )    $ Assembly 14
          trcl = ( -56.8706 -28.7528 0.0000 )   u=3
315 0          -301 fill=5 ( -28.7528 -28.7528 0.0000 )    $ Assembly 15
          trcl = ( -28.7528 -28.7528 0.0000 )   u=3
316 0          -301 fill=5 ( 0.0000 -28.7528 0.0000 )    $ Assembly 16
          trcl = ( 0.0000 -28.7528 0.0000 )   u=3
317 0          -301 fill=5 ( 28.7528 -28.7528 0.0000 )    $ Assembly 17
          trcl = ( 28.7528 -28.7528 0.0000 )   u=3
318 0          -301 fill=5 ( 56.8706 -28.7528 0.0000 )    $ Assembly 18
          trcl = ( 56.8706 -28.7528 0.0000 )   u=3
319 0          -301 fill=5 ( -28.7528 -56.8706 0.0000 )    $ Assembly 19
          trcl = ( -28.7528 -56.8706 0.0000 )   u=3
320 0          -301 fill=5 ( 0.0000 -56.8706 0.0000 )    $ Assembly 20
          trcl = ( 0.0000 -56.8706 0.0000 )   u=3
321 0          -301 fill=5 ( 28.7528 -56.8706 0.0000 )    $ Assembly 21
          trcl = ( 28.7528 -56.8706 0.0000 )   u=3
322 0                $ Canister Cavity
      #301 #302 #303 #304 #305
      #306 #307 #308 #309 #310
      #311 #312 #313 #314 #315
      #316 #317 #318 #319 #320
      #321    fill=4    u=3
C Cells - Canister
401 0          -401 fill=3      u=2 $ Cavity
402 7 -7.9400 -407 +401.3      u=2 $ Canister Bottom
403 7 -7.9400 -402 +401.2 -405 trcl = ( 48.2599 48.2599 0.0000 )    u=2 $ Bottom Drain Port
404 0          -403 +405 -406 trcl = ( 48.2599 48.2599 0.0000 )    u=2 $ Middle Drain Port
405 7 -7.9400 -404 +406 -407.2 trcl = ( 48.2599 48.2599 0.0000 )    u=2 $ Top Drain Port
406 like 403 but   trcl = ( -48.2599 -48.2599 0.0000 )    u=2 $ Bottom Vent Port
407 like 404 but   trcl = ( -48.2599 -48.2599 0.0000 )    u=2 $ Middle Vent Port
408 like 405 but   trcl = ( -48.2599 -48.2599 0.0000 )    u=2 $ Top Vent Port
409 7 -7.9400 -407 -401.3 +401.1     u=2 $ Canister Shell
410 7 -7.9400 -407 -401.1 +401.2 #403 #404 #405 #406 #407 #408     u=2 $ Lid
411 0          +407       u=2 $ Outside
C Transfer Cask Cells
501 0          -501 -502 #510  fill=2 ( 0.0000 0.0000 5.0800 )   u=1 $ Cavity
502 8 -7.8212 -501 +502 -506    u=1 $ Bottom forging
503 8 -7.8212 -503 +502 +506 -507   u=1 $ Inner shell
504 10 -11.344 -504 +503 +506 -507   u=1 $ Lead shell
505 11 -1.6316 -505 +504 +506 -507   u=1 $ NS-4-FR
506 8 -7.8212 -501 +505 +506 -507   u=1 $ Outer shell
507 8 -7.8212 -501 +502 +507    u=1 $ Top forging
508 8 -7.8212 (-508 +509 -514) : (-508 -510 -514)      u=1 $ Door rail
509 8 -7.8212 -513 -511 +512 -514   u=1 $ Door steel
510 8 -7.8212 -515 +516     u=1 $ FME bar
511 0          +501 #508  #509     u=1 $ Void
C Detector Cells - Axial Biasing
700  0  -700  fill=1  $ Surface
800  0  -800  +700  $ PortAzi
900  0  -900  +700  +800  $ AnnulusAzi
1000  0  -1000  +700  +800  +900  $ 1ft
1100  0  -1100  +700  +800  +900  +1000  $ 1m
1200  0  -1200  +700  +800  +900  +1000  +1100  $ 2m
```

Figure 5.A.7.6-2 Sample MCNP5 Input File – Transfer Cask

```
1300  0  -1300  +700  +800  +900  +1000  +1100  +1200  $ 4m
1400  0  +700  +800  +900  +1000  +1100  +1200  +1300  $ Exterior

C Fuel Assembly Surfaces - ng17a
1 RPP -10.7010 10.7010 -10.7010 10.7010 0.0000 6.8580  $ Lower Nozzle
2 RPP -10.7010 10.7010 -10.7010 10.7010 0.0000 8.5979  $ Lower Plenum
3 RPP -10.7010 10.7010 -10.7010 10.7010 0.0000 374.3579  $ Fuel
4 RPP -10.7010 10.7010 -10.7010 10.7010 0.0000 396.5702  $ Upper Plenum
5 RPP -10.7010 10.7010 -10.7010 10.7010 0.0000 405.8920  $ Upper Nozzle
C Surfaces - Fuel Tube
101 RPP -11.4300 11.4300 -11.4300 11.4300 0.0000 439.4200  $ Tube void
102 RPP -12.5476 12.5476 -12.5476 12.5476 0.0000 414.0200  $ Tube
201 RCC 0.0000 0.0000 0.0000 0.0000 0.0000 2.5400 82.8675 $ Support disk
202 RCC 0.0000 0.0000 0.0000 0.0000 0.0000 2.5400 82.5500 $ Heat transfer disk
203 RCC 0.0000 0.0000 0.0000 0.0000 0.0000 1.9050 82.8675 $ Top weldment disk
204 RCC 0.0000 0.0000 0.0000 0.0000 0.0000 2.5400 82.8675 $ Bottom weldment disk
301 RPP -12.8270 12.8270 -12.8270 12.8270 0.0000 439.4200  $ Basket/Disk Opening
C Surfaces - Canister
401 RCC 0.0000 0.0000 0.0000 0.0000 0.0000 439.4200 83.1850   $ Cavity
402 CZ 1.2700          $ Bot Cylinder Radius
403 CZ 5.0800          $ Mid Cyclinder Radius
404 CZ 7.4041          $ Top Cylinder Radius
405 PZ 450.2150          $ Port plane bot/mid
406 PZ 456.6920          $ Port plane mid/top
407 RCC 0.0000 0.0000 -5.0800 0.0000 0.0000 464.8200 84.4550   $ Canister
C Transfer Cask Surfaces
501 RCC 0.0000 0.0000 0.0000 0.0000 0.0000 467.1822 104.7750  $ Cask
502 CZ 85.7250         $ Cavity
503 CZ 87.6300         $ Inner shell OR
504 CZ 95.5675         $ Lead shell OR
505 CZ 101.6000         $ Outer shell IR
506 PZ 30.4800         $ Bottom forging
507 PZ 431.6222         $ Top forging
508 RPP -99.8982 99.8982 -104.2924 104.2924 -12.7000 0.0000   $ Door container
509 PY 89.5350         $ Inside rail +y
510 PY -89.5350         $ Inside rail -y
511 PY 89.5350         $ Door +y
512 PY -89.5350         $ Door -y
513 RHP 0.0000 0.0000 -12.7000 0.0000 0.0000 12.7000   $ Door prism
        100.1648 0.0000 0.0000 81.4323 -66.6496 0.0000
        -81.4323 -66.6496 0.0000
514 RCC 0.0000 0.0000 -12.7000 0.0000 0.0000 12.7000 104.7750  $ Door container
515 RCC 0.0000 0.0000 464.8200 0.0000 0.0000 1.9050 85.7250  $ FME bar outer
516 CZ 83.8200         $ FME bar inner
C Axial Detector DTA (Surface)
700  RCC  0.0000  0.0000  -12.8000  0.0000  0.0000  480.0822  104.8750
701  CZ  8.7396
702  CZ  17.4792
703  CZ  26.2188
704  CZ  34.9583
705  CZ  43.6979
706  CZ  52.4375
707  CZ  61.1771
708  CZ  69.9167
709  CZ  78.6563
710  CZ  87.3958
711  CZ  96.1354
C Axial Detector DTAA (PortAzi)
800  RCC  0.0000  0.0000  -12.8000  0.0000  0.0000  480.1822  75.6539
801  CZ  60.8457
802     PX  0.0000
803  1  PX  0.0000
804  2  PX  0.0000
805  3  PX  0.0000
806  4  PX  0.0000
807  5  PX  0.0000
808  6  PX  0.0000
809  7  PX  0.0000
810  8  PX  0.0000
811  9  PX  0.0000
812  10  PX  0.0000
813  11  PX  0.0000
814  12  PX  0.0000
815  13  PX  0.0000
816  14  PX  0.0000
817  15  PX  0.0000
818     PY  0.0000
```

Figure 5.A.7.6-2 Sample MCNP5 Input File – Transfer Cask

```
819  16  PX  0.0000
820  17  PX  0.0000
821  18  PX  0.0000
822  19  PX  0.0000
823  20  PX  0.0000
824  21  PX  0.0000
825  22  PX  0.0000
826  23  PX  0.0000
827  24  PX  0.0000
828  25  PX  0.0000
829  26  PX  0.0000
830  27  PX  0.0000
831  28  PX  0.0000
832  29  PX  0.0000
833  30  PX  0.0000
C Axial Detector DTAB (AnnulusAzi)
900  RCC  0.0000  0.0000  -12.8000  0.0000  0.0000  480.2822  85.7250
901  CZ  75.6539
902     PX  0.0000
903  8  PX  0.0000
904     PY  0.0000
905  23  PX  0.0000
C Axial Detector DTB (1ft)
1000  RCC  0.0000  0.0000  -12.8000  0.0000  0.0000  510.5622  135.3550
1001  CZ  11.2796
1002  CZ  22.5592
1003  CZ  33.8388
1004  CZ  45.1183
1005  CZ  56.3979
1006  CZ  67.6775
1007  CZ  78.9571
1008  CZ  90.2367
1009  CZ  101.5163
1010  CZ  112.7958
1011  CZ  124.0754
C Axial Detector DTC (1m)
1100  RCC  0.0000  0.0000  -12.8000  0.0000  0.0000  580.0822  204.8750
1101  CZ  17.0729
1102  CZ  34.1458
1103  CZ  51.2188
1104  CZ  68.2917
1105  CZ  85.3646
1106  CZ  102.4375
1107  CZ  119.5104
1108  CZ  136.5833
1109  CZ  153.6563
1110  CZ  170.7292
1111  CZ  187.8021
C Axial Detector DTD (2m)
1200  RCC  0.0000  0.0000  -12.8000  0.0000  0.0000  680.0822  304.8750
1201  CZ  25.4063
1202  CZ  50.8125
1203  CZ  76.2188
1204  CZ  101.6250
1205  CZ  127.0313
1206  CZ  152.4375
1207  CZ  177.8438
1208  CZ  203.2500
1209  CZ  228.6563
1210  CZ  254.0625
1211  CZ  279.4688
C Axial Detector DTE (4m)
1300  RCC  0.0000  0.0000  -12.8000  0.0000  0.0000  880.0822  504.8750
1301  CZ  42.0729
1302  CZ  84.1458
1303  CZ  126.2188
1304  CZ  168.2917
1305  CZ  210.3646
1306  CZ  252.4375
1307  CZ  294.5104
1308  CZ  336.5833
1309  CZ  378.6563
1310  CZ  420.7292
1311  CZ  462.8021

C
C Materials List - Common Materials - v3.0
```

Figure 5.A.7.6-2 Sample MCNP5 Input File – Transfer Cask

```
C
C Homogenized Lower Nozzle
m1     24000 -0.190 25055 -0.020 26000 -0.695
       28000 -0.095
C Homogenized Lower Plenum
m2     24000 -1.0000E-03 50000 -1.5000E-02
       26000 -1.2500E-03 7014 -5.0000E-04
       40000 -9.8225E-01
C Homogenized UO2 Fuel
m3     92235 -3.6495E-02 40000 -1.6893E-01 24000 -1.7199E-04
       92238 -6.9340E-01 50000 -2.5798E-03 7014 -8.5993E-05
       8016 -9.8121E-02 26000 -2.1498E-04
C Homogenized Upper Plenum
m4     24000 -1.3648E-01 50000 -4.2477E-03 25055 -1.4336E-02
       26000 -4.9854E-01 7014 -1.4159E-04 28000 -6.8098E-02
       40000 -2.7816E-01
C Homogenized Upper Nozzle
m5     24000 -0.190 25055 -0.020 26000 -0.695
       28000 -0.095
C Water
m6     1001 2 8016 1
C Stainless Steel
m7     24000 -0.190 25055 -0.020 26000 -0.695
       28000 -0.095
C Carbon Steel
m8     26000 -0.99 6012 -0.01
C Aluminum
m9     13027 -1.0
C Lead
m10    82000 -1.0
C NS-4-FR
m11    5010 -9.3127E-04 13027 -2.1420E-01 6000 -2.7627E-01
       5011 -3.7721E-03 1001 -6.0012E-02 7014 -1.9815E-02
       8016 -4.2500E-01
C Concrete
m12    26000 -0.014 20000 -0.044 14000 -0.337
       1001 -0.010 8016 -0.532 11023 -0.029
       13027 -0.034
C Vent Port Middle Cylinder
m13    24000 -0.190 25055 -0.020 26000 -0.695
       28000 -0.095
C Balsa
m14    6012 6 1001 10 8016 5
C NS-4-FR (Accident)
m15    5010 -1.7596E-03 13027 -4.3257E-01 6012 -5.5793E-01
       5011 -7.7389E-03
C Heat Fin
m16    24000 -1.0857E-01 25055 -1.1429E-02 26000 -3.9714E-01
       28000 -5.4286E-02 29063 -2.9644E-01 29065 -1.3213E-01
nonu                    $ Disable subcritical multiplication
C
C Cell Importances
C
imp:n 1 111r 0
C
C PWR Source Definition - Fuel Neutron Response to Group 7
C
sdef x=d1 y=d2 z=d3 erg=d4 cell=700:501:401:d5:101:3
si1    -10.70102 10.70102
sp1    0 1
si2    -10.70102 10.70102
sp2    0 1
si3    8.5979 28.9179 49.2379 69.5579 89.8779 110.1979 130.5179
       150.8379 171.1579 191.4779 211.7979 232.1179 252.4379 272.7579
       293.0779 313.3979 333.7179 354.0379 374.3579
sp3    0.0000 0.1493 0.8746 1.3619 1.5240 1.5533 1.5415
       1.5181 1.4893 1.4722 1.4722 1.4779 1.4836 1.4779
       1.4273 1.2834 0.8900 0.2796 0.0335
si4    6.070E+00 7.000E+00
sp4    0 1
C Source Information
si5 l      301 302 303
       304 305 306 307 308
       309 310 311 312 313
       314 315 316 317 318
           319 320 321
C Source Probability
```

Figure 5.A.7.6-2 Sample MCNP5 Input File – Transfer Cask

```
sp5        1.0 1.0 1.0
      1.0 1.0 1.0 1.0 1.0
      1.0 1.0 1.0 1.0 1.0
      1.0 1.0 1.0 1.0 1.0
          1.0 1.0 1.0
mode n
ctme 60
C
C ANSI/ANS-6.1.1-1977 - Neutron Flux-to-Dose Conversion Factors
C (mrem/hr)/(neutrons/cm2-sec)
C
de0   2.5E-08 1E-07 0.000001 0.00001 0.0001 0.001 0.01
      0.1 0.5 1 2.5 5 7 10
      14 20
df0   3.67E-03 3.67E-03 4.46E-03 4.54E-03 4.18E-03 3.76E-03 3.56E-03
      2.17E-02 9.26E-02 1.32E-01 1.25E-01 1.56E-01 1.47E-01 1.47E-01
      2.08E-01 2.27E-01
C
C Weight Window Generation - Top Axial
C
wwg 2 0 0 0 0
wwp:n 5 3 5 0 -1 0
mesh geom=cyl ref=0 0 378 origin=0.1 0.1 -14
     imesh 83.2 84.5 85.7 87.6 95.6 101.6 104.8 604.8
     iints 1 1 1 1 1 1 1 1
     jmesh 1 14 19 26 27 393 415 425 458 494 994
     jints 1 1 1 1 1 10 1 1 1 3 1
     kmesh 1
     kints 1
C wwge:n  1e-5 1e-3 1 20
fc2 Axial Surface Tally
f2:n +700.2
fm2 4.1435E+01
fs2  -701  -702  -703  -704  -705  -706
     -707  -708  -709  -710  -711  T
tf2
fc12 Axial PortAzi Tally Q1 (+x+y)
f12:n +800.2
fm12 4.1435E+01
fs12 -801  -802  -818
     +817  +816  +815  +814  +813  +812
     +811  +810  +809  +808  +807  +806
     +805  +804  +803  T
sd12 1.1631E+04  3.1751E+03  1.5875E+03  9.9221E+01  15r  6.3501E+03
tf12
fc22 Axial PortAzi Tally Q2 (-x+y)
f22:n +800.2
fm22 4.1435E+01
fs22 -801  +802  -818
     -833  -832  -831  -830  -829  -828
     -827  -826  -825  -824  -823  -822
     -821  -820  -819  T
sd22 1.1631E+04  3.1751E+03  1.5875E+03  9.9221E+01  15r  6.3501E+03
tf22
fc32 Axial PortAzi Tally Q3 (-x-y)
f32:n +800.2
fm32 4.1435E+01
fs32 -801  +802  +818
     -817  -816  -815  -814  -813  -812
     -811  -810  -809  -808  -807  -806
     -805  -804  -803  T
sd32 1.1631E+04  3.1751E+03  1.5875E+03  9.9221E+01  15r  6.3501E+03
tf32
fc42 Axial PortAzi Tally Q4 (+x-y)
f42:n +800.2
fm42 4.1435E+01
fs42 -801  -802  +818
     +833  +832  +831  +830  +829  +828
     +827  +826  +825  +824  +823  +822
     +821  +820  +819  T
sd42 1.1631E+04  3.1751E+03  1.5875E+03  9.9221E+01  15r  6.3501E+03
tf42
fc52 Axial AnnulusAzi Tally Q1 (+x+y)
f52:n +900.2
fm52 4.1435E+01
fs52 -901  -902  -904
     +903  T
```

Figure 5.A.7.6-2 Sample MCNP5 Input File – Transfer Cask

```
sd52 1.7981E+04  2.5530E+03  1.2765E+03  6.3824E+02  1r  5.1059E+03
tf52
fc62 Axial AnnulusAzi Tally Q2 (-x+y)
f62:n +900.2
fm62 4.1435E+01
fs62 -901  +902  -904
     -905  T
sd62 1.7981E+04  2.5530E+03  1.2765E+03  6.3824E+02  1r  5.1059E+03
tf62
fc72 Axial AnnulusAzi Tally Q3 (-x-y)
f72:n +900.2
fm72 4.1435E+01
fs72 -901  +902  +904
     -903  T
sd72 1.7981E+04  2.5530E+03  1.2765E+03  6.3824E+02  1r  5.1059E+03
tf72
fc82 Axial AnnulusAzi Tally Q4 (+x-y)
f82:n +900.2
fm82 4.1435E+01
fs82 -901  -902  +904
     +905  T
sd82 1.7981E+04  2.5530E+03  1.2765E+03  6.3824E+02  1r  5.1059E+03
tf82
fc92 Axial 1ft Tally
f92:n +1000.2
fm92 4.1435E+01
fs92  -1001  -1002  -1003  -1004  -1005  -1006
     -1007  -1008  -1009  -1010  -1011  T
tf92
fc102 Axial 1m Tally
f102:n +1100.2
fm102 4.1435E+01
fs102  -1101  -1102  -1103  -1104  -1105  -1106
     -1107  -1108  -1109  -1110  -1111  T
tf102
fc112 Axial 2m Tally
f112:n +1200.2
fm112 4.1435E+01
fs112  -1201  -1202  -1203  -1204  -1205  -1206
     -1207  -1208  -1209  -1210  -1211  T
tf112
fc122 Axial 4m Tally
f122:n +1300.2
fm122 4.1435E+01
fs122  -1301  -1302  -1303  -1304  -1305  -1306
     -1307  -1308  -1309  -1310  -1311  T
tf122
C
C
C Print Control
C
prdmp -30 -60 1 2
print
C
C Random Number Generator
C
rand gen=2 seed=19073486328125 stride=152917 hist=1
C
C Rotation Matrix
C
C 5.625 degree rotation around z-axis
*TR1 0.0 0.0 0.0 5.625 95.625 90 -84.375 5.625 90 90 90 0
C 11.25 degree rotation around z-axis
*TR2 0.0 0.0 0.0 11.250 101.250 90 -78.750 11.250 90 90 90 0
C 16.875 degree rotation around z-axis
*TR3 0.0 0.0 0.0 16.875 106.875 90 -73.125 16.875 90 90 90 0
C 22.5 degree rotation around z-axis
*TR4 0.0 0.0 0.0 22.500 112.500 90 -67.500 22.500 90 90 90 0
C 28.125 degree rotation around z-axis
*TR5 0.0 0.0 0.0 28.125 118.125 90 -61.875 28.125 90 90 90 0
C 33.75 degree rotation around z-axis
*TR6 0.0 0.0 0.0 33.750 123.750 90 -56.250 33.750 90 90 90 0
C 39.375 degree rotation around z-axis
*TR7 0.0 0.0 0.0 39.375 129.375 90 -50.625 39.375 90 90 90 0
C 45 degree rotation around z-axis
*TR8 0.0 0.0 0.0 45.000 135.000 90 -45.000 45.000 90 90 90 0
C 50.625 degree rotation around z-axis
```

Figure 5.A.7.6-2 Sample MCNP5 Input File – Transfer Cask

```
*TR9 0.0 0.0 0.0 50.625 140.625 90 -39.375 50.625 90 90 90 0
C 56.25 degree rotation around z-axis
*TR10 0.0 0.0 0.0 56.250 146.250 90 -33.750 56.250 90 90 90 0
C 61.875 degree rotation around z-axis
*TR11 0.0 0.0 0.0 61.875 151.875 90 -28.125 61.875 90 90 90 0
C 67.5 degree rotation around z-axis
*TR12 0.0 0.0 0.0 67.500 157.500 90 -22.500 67.500 90 90 90 0
C 73.125 degree rotation around z-axis
*TR13 0.0 0.0 0.0 73.125 163.125 90 -16.875 73.125 90 90 90 0
C 78.75 degree rotation around z-axis
*TR14 0.0 0.0 0.0 78.750 168.750 90 -11.250 78.750 90 90 90 0
C 84.375 degree rotation around z-axis
*TR15 0.0 0.0 0.0 84.375 174.375 90 -5.625 84.375 90 90 90 0
C 95.625 degree rotation around z-axis
*TR16 0.0 0.0 0.0 95.625 185.625 90 5.625 95.625 90 90 90 0
C 101.25 degree rotation around z-axis
*TR17 0.0 0.0 0.0 101.250 191.250 90 11.250 101.250 90 90 90 0
C 106.875 degree rotation around z-axis
*TR18 0.0 0.0 0.0 106.875 196.875 90 16.875 106.875 90 90 90 0
C 112.5 degree rotation around z-axis
*TR19 0.0 0.0 0.0 112.500 202.500 90 22.500 112.500 90 90 90 0
C 118.125 degree rotation around z-axis
*TR20 0.0 0.0 0.0 118.125 208.125 90 28.125 118.125 90 90 90 0
C 123.75 degree rotation around z-axis
*TR21 0.0 0.0 0.0 123.750 213.750 90 33.750 123.750 90 90 90 0
C 129.375 degree rotation around z-axis
*TR22 0.0 0.0 0.0 129.375 219.375 90 39.375 129.375 90 90 90 0
C 135 degree rotation around z-axis
*TR23 0.0 0.0 0.0 135.000 225.000 90 45.000 135.000 90 90 90 0
C 140.625 degree rotation around z-axis
*TR24 0.0 0.0 0.0 140.625 230.625 90 50.625 140.625 90 90 90 0
C 146.25 degree rotation around z-axis
*TR25 0.0 0.0 0.0 146.250 236.250 90 56.250 146.250 90 90 90 0
C 151.875 degree rotation around z-axis
*TR26 0.0 0.0 0.0 151.875 241.875 90 61.875 151.875 90 90 90 0
C 157.5 degree rotation around z-axis
*TR27 0.0 0.0 0.0 157.500 247.500 90 67.500 157.500 90 90 90 0
C 163.125 degree rotation around z-axis
*TR28 0.0 0.0 0.0 163.125 253.125 90 73.125 163.125 90 90 90 0
C 168.75 degree rotation around z-axis
*TR29 0.0 0.0 0.0 168.750 258.750 90 78.750 168.750 90 90 90 0
C 174.375 degree rotation around z-axis
*TR30 0.0 0.0 0.0 174.375 264.375 90 84.375 174.375 90 90 90 0
```

Figure 5.A.7.6-3 Sample MCNP5 Input File – Concrete Cask

```
UNITAD VCC - strTrnDryRadFg_ng17a_07g
C Radial Biasing - Fuel Gamma Source
C Fuel Assembly Cells - ng17a
1 1 -1.8782 -1      u=6 $ Lower Nozzle
2 2 -2.6798 -2 +1     u=6 $ Lower Plenum
3 3 -3.8195 -3 +2     u=6 $ Fuel
4 4 -0.7412 -4 +3     u=6 $ Upper Plenum
5 5 -1.8385 -5 +4     u=6 $ Upper Nozzle
6 0          +5      u=6 $ Outside
C Cells - Fuel Tube
101 0          -101 fill=6 ( 0.0000 0.0000 0.0000 )    u=5 $ Tube void
102 7 -7.9400 -102 +101     u=5 $ Tube
103 0          +102 +101     u=5 $ Void
c Cell Cards - Disk Stack
201 7 -7.94 -204 trcl = ( 0.0000 0.0000 2.5400 )     u=4 $ Bottom weldment disk
202 7 -7.94 -201 trcl = ( 0.0000 0.0000 7.6200 )     u=4 $ Support disk 1
203 9 -2.70 -202 trcl = ( 0.0000 0.0000 15.8750 )     u=4 $ Heat transfer disk 1
204 like 202 but    trcl = ( 0.0000 0.0000 24.1300 )     u=4 $ Support disk 2
205 like 203 but    trcl = ( 0.0000 0.0000 32.3850 )     u=4 $ Heat transfer disk 2
206 like 202 but    trcl = ( 0.0000 0.0000 40.6400 )     u=4 $ Support disk 3
207 like 203 but    trcl = ( 0.0000 0.0000 48.8950 )     u=4 $ Heat transfer disk 3
208 like 202 but    trcl = ( 0.0000 0.0000 57.1500 )     u=4 $ Support disk 4
209 like 203 but    trcl = ( 0.0000 0.0000 65.4050 )     u=4 $ Heat transfer disk 4
210 like 202 but    trcl = ( 0.0000 0.0000 73.6600 )     u=4 $ Support disk 5
211 like 203 but    trcl = ( 0.0000 0.0000 81.9150 )     u=4 $ Heat transfer disk 5
212 like 202 but    trcl = ( 0.0000 0.0000 90.1700 )     u=4 $ Support disk 6
213 like 203 but    trcl = ( 0.0000 0.0000 98.4250 )     u=4 $ Heat transfer disk 6
214 like 202 but    trcl = ( 0.0000 0.0000 106.6800 )     u=4 $ Support disk 7
215 like 203 but    trcl = ( 0.0000 0.0000 114.9350 )     u=4 $ Heat transfer disk 7
216 like 202 but    trcl = ( 0.0000 0.0000 123.1900 )     u=4 $ Support disk 8
217 like 203 but    trcl = ( 0.0000 0.0000 131.4450 )     u=4 $ Heat transfer disk 8
218 like 202 but    trcl = ( 0.0000 0.0000 139.7000 )     u=4 $ Support disk 9
219 like 203 but    trcl = ( 0.0000 0.0000 147.9550 )     u=4 $ Heat transfer disk 9
220 like 202 but    trcl = ( 0.0000 0.0000 156.2100 )     u=4 $ Support disk 10
221 like 203 but    trcl = ( 0.0000 0.0000 164.4650 )     u=4 $ Heat transfer disk 10
222 like 202 but    trcl = ( 0.0000 0.0000 172.7200 )     u=4 $ Support disk 11
223 like 203 but    trcl = ( 0.0000 0.0000 180.9750 )     u=4 $ Heat transfer disk 11
224 like 202 but    trcl = ( 0.0000 0.0000 189.2300 )     u=4 $ Support disk 12
225 like 203 but    trcl = ( 0.0000 0.0000 197.4850 )     u=4 $ Heat transfer disk 12
226 like 202 but    trcl = ( 0.0000 0.0000 205.7400 )     u=4 $ Support disk 13
227 like 203 but    trcl = ( 0.0000 0.0000 213.9950 )     u=4 $ Heat transfer disk 13
228 like 202 but    trcl = ( 0.0000 0.0000 222.2500 )     u=4 $ Support disk 14
229 like 203 but    trcl = ( 0.0000 0.0000 230.5050 )     u=4 $ Heat transfer disk 14
230 like 202 but    trcl = ( 0.0000 0.0000 238.7600 )     u=4 $ Support disk 15
231 like 203 but    trcl = ( 0.0000 0.0000 247.0150 )     u=4 $ Heat transfer disk 15
232 like 202 but    trcl = ( 0.0000 0.0000 255.2700 )     u=4 $ Support disk 16
233 like 203 but    trcl = ( 0.0000 0.0000 263.5250 )     u=4 $ Heat transfer disk 16
234 like 202 but    trcl = ( 0.0000 0.0000 271.7800 )     u=4 $ Support disk 17
235 like 203 but    trcl = ( 0.0000 0.0000 280.0350 )     u=4 $ Heat transfer disk 17
236 like 202 but    trcl = ( 0.0000 0.0000 288.2900 )     u=4 $ Support disk 18
237 like 203 but    trcl = ( 0.0000 0.0000 296.5450 )     u=4 $ Heat transfer disk 18
238 like 202 but    trcl = ( 0.0000 0.0000 304.8000 )     u=4 $ Support disk 19
239 like 203 but    trcl = ( 0.0000 0.0000 313.0550 )     u=4 $ Heat transfer disk 19
240 like 202 but    trcl = ( 0.0000 0.0000 321.3100 )     u=4 $ Support disk 20
241 like 203 but    trcl = ( 0.0000 0.0000 329.5650 )     u=4 $ Heat transfer disk 20
242 like 202 but    trcl = ( 0.0000 0.0000 337.8200 )     u=4 $ Support disk 21
243 like 203 but    trcl = ( 0.0000 0.0000 346.0750 )     u=4 $ Heat transfer disk 21
244 like 202 but    trcl = ( 0.0000 0.0000 354.3300 )     u=4 $ Support disk 22
245 like 203 but    trcl = ( 0.0000 0.0000 362.5850 )     u=4 $ Heat transfer disk 22
246 like 202 but    trcl = ( 0.0000 0.0000 370.8400 )     u=4 $ Support disk 23
247 like 203 but    trcl = ( 0.0000 0.0000 379.0950 )     u=4 $ Heat transfer disk 23
248 like 202 but    trcl = ( 0.0000 0.0000 387.3500 )     u=4 $ Support disk 24
249 like 203 but    trcl = ( 0.0000 0.0000 395.6050 )     u=4 $ Heat transfer disk 24
250 like 202 but    trcl = ( 0.0000 0.0000 403.8600 )     u=4 $ Support disk 25
251 7 -7.94 -203 trcl = ( 0.0000 0.0000 420.3700 )     u=4 $ Top weldment disk
252 0                 $ Outside disks
      #201 #202 #203 #204 #205 #206 #207 #208 #209 #210
      #211 #212 #213 #214 #215 #216 #217 #218 #219 #220
      #221 #222 #223 #224 #225 #226 #227 #228 #229 #230
      #231 #232 #233 #234 #235 #236 #237 #238 #239 #240
      #241 #242 #243 #244 #245 #246 #247 #248 #249 #250
      #251         u=4
c Cell Cards - Canister Cavity
301 0          -301 fill=5 ( -28.7528 56.8706 0.0000 )     $ Assembly 1
```

Figure 5.A.7.6-3 Sample MCNP5 Input File – Concrete Cask

```
          trcl = ( -28.7528 56.8706 0.0000 )   u=3
302 0         -301 fill=5 ( 0.0000 56.8706 0.0000 )    $ Assembly 2
          trcl = ( 0.0000 56.8706 0.0000 )   u=3
303 0         -301 fill=5 ( 28.7528 56.8706 0.0000 )    $ Assembly 3
          trcl = ( 28.7528 56.8706 0.0000 )   u=3
304 0         -301 fill=5 ( -56.8706 28.7528 0.0000 )    $ Assembly 4
          trcl = ( -56.8706 28.7528 0.0000 )   u=3
305 0         -301 fill=5 ( -28.7528 28.7528 0.0000 )    $ Assembly 5
          trcl = ( -28.7528 28.7528 0.0000 )   u=3
306 0         -301 fill=5 ( 0.0000 28.7528 0.0000 )    $ Assembly 6
          trcl = ( 0.0000 28.7528 0.0000 )   u=3
307 0         -301 fill=5 ( 28.7528 28.7528 0.0000 )    $ Assembly 7
          trcl = ( 28.7528 28.7528 0.0000 )   u=3
308 0         -301 fill=5 ( 56.8706 28.7528 0.0000 )    $ Assembly 8
          trcl = ( 56.8706 28.7528 0.0000 )   u=3
309 0         -301 fill=5 ( -56.8706 0.0000 0.0000 )    $ Assembly 9
          trcl = ( -56.8706 0.0000 0.0000 )   u=3
310 0         -301 fill=5 ( -28.7528 0.0000 0.0000 )    $ Assembly 10
          trcl = ( -28.7528 0.0000 0.0000 )   u=3
311 0         -301 fill=5 ( 0.0000 0.0000 0.0000 )    $ Assembly 11
          trcl = ( 0.0000 0.0000 0.0000 )   u=3
312 0         -301 fill=5 ( 28.7528 0.0000 0.0000 )    $ Assembly 12
          trcl = ( 28.7528 0.0000 0.0000 )   u=3
313 0         -301 fill=5 ( 56.8706 0.0000 0.0000 )    $ Assembly 13
          trcl = ( 56.8706 0.0000 0.0000 )   u=3
314 0         -301 fill=5 ( -56.8706 -28.7528 0.0000 )    $ Assembly 14
          trcl = ( -56.8706 -28.7528 0.0000 )   u=3
315 0         -301 fill=5 ( -28.7528 -28.7528 0.0000 )    $ Assembly 15
          trcl = ( -28.7528 -28.7528 0.0000 )   u=3
316 0         -301 fill=5 ( 0.0000 -28.7528 0.0000 )    $ Assembly 16
          trcl = ( 0.0000 -28.7528 0.0000 )   u=3
317 0         -301 fill=5 ( 28.7528 -28.7528 0.0000 )    $ Assembly 17
          trcl = ( 28.7528 -28.7528 0.0000 )   u=3
318 0         -301 fill=5 ( 56.8706 -28.7528 0.0000 )    $ Assembly 18
          trcl = ( 56.8706 -28.7528 0.0000 )   u=3
319 0         -301 fill=5 ( -28.7528 -56.8706 0.0000 )    $ Assembly 19
          trcl = ( -28.7528 -56.8706 0.0000 )   u=3
320 0         -301 fill=5 ( 0.0000 -56.8706 0.0000 )    $ Assembly 20
          trcl = ( 0.0000 -56.8706 0.0000 )   u=3
321 0         -301 fill=5 ( 28.7528 -56.8706 0.0000 )    $ Assembly 21
          trcl = ( 28.7528 -56.8706 0.0000 )   u=3
322 0                $ Canister Cavity
      #301 #302 #303 #304 #305
      #306 #307 #308 #309 #310
      #311 #312 #313 #314 #315
      #316 #317 #318 #319 #320
      #321    fill=4    u=3
C Cells - Canister
401 0         -401 fill=3      u=2 $ Cavity
402 7 -7.9400 -402 +401      u=2 $ Canister
403 0         +402       u=2 $ Outside
C VCC Cells
501 8 -7.8212 -501       u=1 $ Pedestal plate
502 8 -7.8212 -502 +503      u=1 $ Stand
503 8 -7.8212 -508 +509 +517 +518    u=1 $ Bottom plate outer
504 8 -7.8212 (-509 +510 -504) : (-509 +510 -505)       u=1 $ Bottom plate connector
505 8 -7.8212 -510       u=1 $ Bottom plate inner
506 8 -7.8212 (-503 -527 +528 -512) : (-503 -525 +526 +527 -512)       u=1 $ Support rail inside stand
507 8 -7.8212 (+502 -527 +528 -512) : (+502 -525 +526 +527 -512)       u=1 $ Support rail outside stand
508 8 -7.8212 (-522 +524 +504 +505 -513) :
              (-523 +524 +504 +505 -513 +522)       u=1 $ Air inlet top
509 8 -7.8212 (-519 +517 +521 -513 +504 +505 +508) :
              (-520 +518 +521 -513 +504 +505 +508)       u=1 $ Air inlet wall
510 8 -7.8212 (-504 +506 +502 -513 +508) : (-505 +507 +502 -513 +508)       u=1 $ Air inlet angular wall
511 8 -7.8212 (-521 -519 +517 +504 +505 +518 +508) :
              (-521 -520 +518 +504 +505 +517 +508)       u=1 $ Air inlet remaining wall
512 12 -2.3234 -513 +511 +515 -516  fill=7     u=1 $ Concrete
513 12 -2.3234 -513 +511 +504 +505 +508 +522 +523 +519 +520 -515       u=1 $ Concrete lower
514 12 -2.3234 -513 +511 +529 +536 +537 +516       u=1 $ Concrete upper
515 12 -2.3234 -514       u=1 $ Concrete pad
516 8 -7.8212 -511 +512 -516     u=1 $ Liner
517 8 -7.8212 -511 +512 +516 +536 +537   u=1 $ Liner upper
518 8 -7.8212 -529 +530      u=1 $ Top flange
519 8 -7.8212 -531       u=1 $ Lid top
520 8 -7.8212 -532 +533      u=1 $ Lid shell
521 12 -2.3234 -533       u=1 $ Lid concrete
522 8 -7.8212 +512 -536 +534 -513 +537   u=1 $ Outlet steel x
```

Figure 5.A.7.6-3 Sample MCNP5 Input File – Concrete Cask

```
523 8 -7.8212 +512 -537 +535 -513    u=1 $ Outlet steel y
524 8 -7.8212 (-538 +550 -512) :
              (-539 +551 -512) :
              (-540 +552 -512) :
              (-541 +553 -512) :
              (-542 +554 -512) :
              (-543 +555 -512) :
              (-544 +556 -512) :
              (-545 +557 -512) :
              (-546 +558 -512) :
              (-547 +559 -512) :
              (-548 +560 -512) :
              (-549 +561 -512)       u=1 $ Standoffs
525 0         (-508 +509 -517) : (-508 +509 -518)       u=1 $ Bottom plate outer void
526 0         -509 +510 +504 +505    u=1 $ Bottom plate connector void
527 0         (-503 -528 -512) : (-503 -526 +527 -512)       u=1 $ Support rail inside stand void
528 0         (+502 -528 -512) : (+502 -526 +527 -512)       u=1 $ Support rail outside stand void
529 0         (-517 +502 +504 +505 -513 +508) :
              (-518 +502 +504 +505 -513 +508 +517)       u=1 $ Air inlet void
530 0         -524 +502 +504 +505       u=1 $ Air inlet top void
531 0         (-506 +508 +502) : (-507 +508 +502)       u=1 $ Connector void
532 0         -503 +525 +527       u=1 $ Stand void
533 0         -512 +501 +502 +525 +527 +529 +532
              #524     fill=2 ( 0.0000 0.0000 5.0800 )   u=1 $ Cavity
534 0         +512 -534 -513     u=1 $ Outlet void x
535 0         +512 -535 -513     u=1 $ Outlet void y
536 0         -529 -530 +532     u=1 $ Flange / lid void
537 0         +513 +514 +531     u=1 $ Exterior
C VCC Rebar Cells
538 8 -7.8212 -562       u=7 $ Inner hoop 1
539 8 -7.8212 -563       u=7 $ Inner hoop 2
540 8 -7.8212 -564       u=7 $ Inner hoop 3
541 8 -7.8212 -565       u=7 $ Inner hoop 4
542 8 -7.8212 -566       u=7 $ Inner hoop 5
543 8 -7.8212 -567       u=7 $ Inner hoop 6
544 8 -7.8212 -568       u=7 $ Inner hoop 7
545 8 -7.8212 -569       u=7 $ Inner hoop 8
546 8 -7.8212 -570       u=7 $ Inner hoop 9
547 8 -7.8212 -571       u=7 $ Inner hoop 10
548 8 -7.8212 -572       u=7 $ Inner hoop 11
549 8 -7.8212 -573       u=7 $ Inner hoop 12
550 12 -2.3234 -574       u=7 $ Inner hoop 13
551 8 -7.8212 -575       u=7 $ Outer hoop 1
552 8 -7.8212 -576       u=7 $ Outer hoop 2
553 8 -7.8212 -577       u=7 $ Outer hoop 3
554 8 -7.8212 -578       u=7 $ Outer hoop 4
555 8 -7.8212 -579       u=7 $ Outer hoop 5
556 8 -7.8212 -580       u=7 $ Outer hoop 6
557 8 -7.8212 -581       u=7 $ Outer hoop 7
558 8 -7.8212 -582       u=7 $ Outer hoop 8
559 8 -7.8212 -583       u=7 $ Outer hoop 9
560 8 -7.8212 -584       u=7 $ Outer hoop 10
561 8 -7.8212 -585       u=7 $ Outer hoop 11
562 8 -7.8212 -586       u=7 $ Outer hoop 12
563 8 -7.8212 -587       u=7 $ Outer hoop 13
564 8 -7.8212 -588       u=7 $ Outer hoop 14
565 8 -7.8212 -589       u=7 $ Outer hoop 15
566 8 -7.8212 -590       u=7 $ Outer hoop 16
567 8 -7.8212 -591       u=7 $ Outer hoop 17
568 8 -7.8212 -592       u=7 $ Outer hoop 18
569 8 -7.8212 -593       u=7 $ Outer hoop 19
570 8 -7.8212 -594       u=7 $ Outer hoop 20
571 8 -7.8212 -595       u=7 $ Outer hoop 21
572 8 -7.8212 -596       u=7 $ Outer hoop 22
573 8 -7.8212 -597       u=7 $ Outer hoop 23
574 8 -7.8212 -598       u=7 $ Outer hoop 24
575 8 -7.8212 -599       u=7 $ Outer hoop 25
576 8 -7.8212 -600       u=7 $ Outer hoop 26
577 8 -7.8212 -601       u=7 $ Outer hoop 27
578 8 -7.8212 -602       u=7 $ Outer hoop 28
579 8 -7.8212 -603       u=7 $ Outer hoop 29
580 8 -7.8212 -604       u=7 $ Outer hoop 30
581 8 -7.8212 -605       u=7 $ Outer hoop 31
582 8 -7.8212 -606       u=7 $ Outer hoop 32
583 8 -7.8212 -607       u=7 $ Outer hoop 33
584 8 -7.8212 -608       u=7 $ Outer hoop 34
585 8 -7.8212 -609       u=7 $ Outer hoop 35
```

Figure 5.A.7.6-3 Sample MCNP5 Input File – Concrete Cask

```
586 8 -7.8212 -610        u=7 $ Outer hoop 36
587 8 -7.8212 -611        u=7 $ Outer hoop 37
588 8 -7.8212 -612        u=7 $ Outer hoop 38
589 8 -7.8212 -613        u=7 $ Outer hoop 39
590 8 -7.8212 -614        u=7 $ Outer hoop 40
591 8 -7.8212 -615        u=7 $ Outer hoop 41
592 8 -7.8212 -616        u=7 $ Outer hoop 42
593 8 -7.8212 -617        u=7 $ Outer hoop 43
594 8 -7.8212 -618        u=7 $ Outer hoop 44
595 8 -7.8212 -619        u=7 $ Outer hoop 45
596 8 -7.8212 -620        u=7 $ Outer hoop 46
597 8 -7.8212 -621        u=7 $ Outer hoop 47
598 8 -7.8212 -622        u=7 $ Outer hoop 48
599 12 -2.3234 -623        u=7 $ Outer hoop 49
600 12 -2.3234 -624        u=7 $ Outer hoop 50
601 12 -2.3234 #538 #539 #540 #541 #542 #543 #544 #545 #546 #547          $ Concrete
        #548 #549 #550 #551 #552 #553 #554 #555 #556 #557
        #558 #559 #560 #561 #562 #563 #564 #565 #566 #567
        #568 #569 #570 #571 #572 #573 #574 #575 #576 #577
        #578 #579 #580 #581 #582 #583 #584 #585 #586 #587
        #588 #589 #590 #591 #592 #593 #594 #595 #596 #597
        #598 #599 #600        fill=8 u=7
602 8 -7.8212 -625   trcl = ( 108.9025 0.0000 0.0000 )    u=8 $ Inner vertical 1
603 like 602 but   trcl = ( 105.1917 28.1860 0.0000 )    u=8 $ Inner vertical 2
604 like 602 but   trcl = ( 94.3123 54.4513 0.0000 )    u=8 $ Inner vertical 3
605 like 602 but   trcl = ( 77.0057 77.0057 0.0000 )    u=8 $ Inner vertical 4
606 like 602 but   trcl = ( 54.4513 94.3123 0.0000 )    u=8 $ Inner vertical 5
607 like 602 but   trcl = ( 28.1860 105.1917 0.0000 )    u=8 $ Inner vertical 6
608 like 602 but   trcl = ( 0.0000 108.9025 0.0000 )    u=8 $ Inner vertical 7
609 like 602 but   trcl = ( -28.1860 105.1917 0.0000 )    u=8 $ Inner vertical 8
610 like 602 but   trcl = ( -54.4513 94.3123 0.0000 )    u=8 $ Inner vertical 9
611 like 602 but   trcl = ( -77.0057 77.0057 0.0000 )    u=8 $ Inner vertical 10
612 like 602 but   trcl = ( -94.3123 54.4513 0.0000 )    u=8 $ Inner vertical 11
613 like 602 but   trcl = ( -105.1917 28.1860 0.0000 )    u=8 $ Inner vertical 12
614 like 602 but   trcl = ( -108.9025 0.0000 0.0000 )    u=8 $ Inner vertical 13
615 like 602 but   trcl = ( -105.1917 -28.1860 0.0000 )    u=8 $ Inner vertical 14
616 like 602 but   trcl = ( -94.3123 -54.4513 0.0000 )    u=8 $ Inner vertical 15
617 like 602 but   trcl = ( -77.0057 -77.0057 0.0000 )    u=8 $ Inner vertical 16
618 like 602 but   trcl = ( -54.4513 -94.3123 0.0000 )    u=8 $ Inner vertical 17
619 like 602 but   trcl = ( -28.1860 -105.1917 0.0000 )    u=8 $ Inner vertical 18
620 like 602 but   trcl = ( 0.0000 -108.9025 0.0000 )    u=8 $ Inner vertical 19
621 like 602 but   trcl = ( 28.1860 -105.1917 0.0000 )    u=8 $ Inner vertical 20
622 like 602 but   trcl = ( 54.4512 -94.3123 0.0000 )    u=8 $ Inner vertical 21
623 like 602 but   trcl = ( 77.0057 -77.0057 0.0000 )    u=8 $ Inner vertical 22
624 like 602 but   trcl = ( 94.3123 -54.4513 0.0000 )    u=8 $ Inner vertical 23
625 like 602 but   trcl = ( 105.1917 -28.1860 0.0000 )    u=8 $ Inner vertical 24
626 8 -7.8212 -625   trcl = ( 160.3375 0.0000 0.0000 )    u=8 $ Outer vertical 1
627 like 626 but   trcl = ( 159.3293 17.9521 0.0000 )    u=8 $ Outer vertical 2
628 like 626 but   trcl = ( 156.3175 35.6785 0.0000 )    u=8 $ Outer vertical 3
629 like 626 but   trcl = ( 151.3399 52.9561 0.0000 )    u=8 $ Outer vertical 4
630 like 626 but   trcl = ( 144.4591 69.5678 0.0000 )    u=8 $ Outer vertical 5
631 like 626 but   trcl = ( 135.7616 85.3047 0.0000 )    u=8 $ Outer vertical 6
632 like 626 but   trcl = ( 125.3569 99.9688 0.0000 )    u=8 $ Outer vertical 7
633 like 626 but   trcl = ( 113.3757 113.3757 0.0000 )    u=8 $ Outer vertical 8
634 like 626 but   trcl = ( 99.9688 125.3569 0.0000 )    u=8 $ Outer vertical 9
635 like 626 but   trcl = ( 85.3047 135.7616 0.0000 )    u=8 $ Outer vertical 10
636 like 626 but   trcl = ( 69.5678 144.4591 0.0000 )    u=8 $ Outer vertical 11
637 like 626 but   trcl = ( 52.9561 151.3399 0.0000 )    u=8 $ Outer vertical 12
638 like 626 but   trcl = ( 35.6785 156.3175 0.0000 )    u=8 $ Outer vertical 13
639 like 626 but   trcl = ( 17.9521 159.3293 0.0000 )    u=8 $ Outer vertical 14
640 like 626 but   trcl = ( 0.0000 160.3375 0.0000 )    u=8 $ Outer vertical 15
641 like 626 but   trcl = ( -17.9521 159.3293 0.0000 )    u=8 $ Outer vertical 16
642 like 626 but   trcl = ( -35.6785 156.3175 0.0000 )    u=8 $ Outer vertical 17
643 like 626 but   trcl = ( -52.9561 151.3399 0.0000 )    u=8 $ Outer vertical 18
644 like 626 but   trcl = ( -69.5678 144.4591 0.0000 )    u=8 $ Outer vertical 19
645 like 626 but   trcl = ( -85.3047 135.7616 0.0000 )    u=8 $ Outer vertical 20
646 like 626 but   trcl = ( -99.9688 125.3569 0.0000 )    u=8 $ Outer vertical 21
647 like 626 but   trcl = ( -113.3757 113.3757 0.0000 )    u=8 $ Outer vertical 22
648 like 626 but   trcl = ( -125.3569 99.9688 0.0000 )    u=8 $ Outer vertical 23
649 like 626 but   trcl = ( -135.7616 85.3047 0.0000 )    u=8 $ Outer vertical 24
650 like 626 but   trcl = ( -144.4591 69.5678 0.0000 )    u=8 $ Outer vertical 25
651 like 626 but   trcl = ( -151.3399 52.9561 0.0000 )    u=8 $ Outer vertical 26
652 like 626 but   trcl = ( -156.3175 35.6785 0.0000 )    u=8 $ Outer vertical 27
653 like 626 but   trcl = ( -159.3293 17.9521 0.0000 )    u=8 $ Outer vertical 28
654 like 626 but   trcl = ( -160.3375 0.0000 0.0000 )    u=8 $ Outer vertical 29
655 like 626 but   trcl = ( -159.3293 -17.9521 0.0000 )    u=8 $ Outer vertical 30
656 like 626 but   trcl = ( -156.3175 -35.6785 0.0000 )    u=8 $ Outer vertical 31
```

Figure 5.A.7.6-3 Sample MCNP5 Input File – Concrete Cask

```
657 like 626 but   trcl = ( -151.3399 -52.9561 0.0000 )    u=8 $ Outer vertical 32
658 like 626 but   trcl = ( -144.4591 -69.5678 0.0000 )    u=8 $ Outer vertical 33
659 like 626 but   trcl = ( -135.7616 -85.3047 0.0000 )    u=8 $ Outer vertical 34
660 like 626 but   trcl = ( -125.3569 -99.9688 0.0000 )    u=8 $ Outer vertical 35
661 like 626 but   trcl = ( -113.3757 -113.3757 0.0000 )    u=8 $ Outer vertical 36
662 like 626 but   trcl = ( -99.9688 -125.3569 0.0000 )    u=8 $ Outer vertical 37
663 like 626 but   trcl = ( -85.3047 -135.7616 0.0000 )    u=8 $ Outer vertical 38
664 like 626 but   trcl = ( -69.5678 -144.4591 0.0000 )    u=8 $ Outer vertical 39
665 like 626 but   trcl = ( -52.9561 -151.3399 0.0000 )    u=8 $ Outer vertical 40
666 like 626 but   trcl = ( -35.6785 -156.3175 0.0000 )    u=8 $ Outer vertical 41
667 like 626 but   trcl = ( -17.9521 -159.3293 0.0000 )    u=8 $ Outer vertical 42
668 like 626 but   trcl = ( 0.0000 -160.3375 0.0000 )    u=8 $ Outer vertical 43
669 like 626 but   trcl = ( 17.9521 -159.3293 0.0000 )    u=8 $ Outer vertical 44
670 like 626 but   trcl = ( 35.6785 -156.3175 0.0000 )    u=8 $ Outer vertical 45
671 like 626 but   trcl = ( 52.9561 -151.3399 0.0000 )    u=8 $ Outer vertical 46
672 like 626 but   trcl = ( 69.5678 -144.4591 0.0000 )    u=8 $ Outer vertical 47
673 like 626 but   trcl = ( 85.3047 -135.7616 0.0000 )    u=8 $ Outer vertical 48
674 like 626 but   trcl = ( 99.9688 -125.3569 0.0000 )    u=8 $ Outer vertical 49
675 like 626 but   trcl = ( 113.3757 -113.3757 0.0000 )    u=8 $ Outer vertical 50
676 like 626 but   trcl = ( 125.3569 -99.9688 0.0000 )    u=8 $ Outer vertical 51
677 like 626 but   trcl = ( 135.7616 -85.3047 0.0000 )    u=8 $ Outer vertical 52
678 like 626 but   trcl = ( 144.4591 -69.5678 0.0000 )    u=8 $ Outer vertical 53
679 like 626 but   trcl = ( 151.3399 -52.9561 0.0000 )    u=8 $ Outer vertical 54
680 like 626 but   trcl = ( 156.3175 -35.6785 0.0000 )    u=8 $ Outer vertical 55
681 like 626 but   trcl = ( 159.3293 -17.9521 0.0000 )    u=8 $ Outer vertical 56
682 12 -2.3234 #602 #603 #604 #605 #606 #607 #608 #609 #610         $ Concrete
        #611 #612 #613 #614 #615 #616 #617 #618 #619 #620
        #621 #622 #623 #624 #625 #626 #627 #628
        #629 #630 #631 #632 #633 #634 #635 #636 #637 #638
        #639 #640 #641 #642 #643 #644 #645 #646 #647 #648
        #649 #650 #651 #652 #653 #654 #655 #656 #657 #658
        #659 #660 #661 #662 #663 #664 #665 #666 #667 #668
        #669 #670 #671 #672 #673 #674 #675 #676 #677 #678
        #679 #680 #681        u=8
C Detector Cells - Radial Biasing
699  0  -699  fill=1  $ Cask
700  0  -700  +699  $ Surface
800  0  -800  +699  +700  $ 1ft
900  0  -900  +699  +700  +800  $ 1m
1000  0  -1000  +699  +700  +800  +900  $ 2m
1100  0  -1100  +699  +700  +800  +900  +1000  $ 4m
1200  0  +699  +700  +800  +900  +1000  +1100  $ Exterior

C Fuel Assembly Surfaces - ng17a
1 RPP -10.7010 10.7010 -10.7010 10.7010 0.0000 6.8580  $ Lower Nozzle
2 RPP -10.7010 10.7010 -10.7010 10.7010 0.0000 8.5979  $ Lower Plenum
3 RPP -10.7010 10.7010 -10.7010 10.7010 0.0000 374.3579  $ Fuel
4 RPP -10.7010 10.7010 -10.7010 10.7010 0.0000 396.5702  $ Upper Plenum
5 RPP -10.7010 10.7010 -10.7010 10.7010 0.0000 405.8920  $ Upper Nozzle
C Surfaces - Fuel Tube
101 RPP -11.4300 11.4300 -11.4300 11.4300 0.0000 439.4200  $ Tube void
102 RPP -12.5476 12.5476 -12.5476 12.5476 0.0000 414.0200  $ Tube
201 RCC 0.0000 0.0000 0.0000 0.0000 0.0000 2.5400 82.8675 $ Support disk
202 RCC 0.0000 0.0000 0.0000 0.0000 0.0000 2.5400 82.5500 $ Heat transfer disk
203 RCC 0.0000 0.0000 0.0000 0.0000 0.0000 1.9050 82.8675 $ Top weldment disk
204 RCC 0.0000 0.0000 0.0000 0.0000 0.0000 2.5400 82.8675 $ Bottom weldment disk
301 RPP -12.8270 12.8270 -12.8270 12.8270 0.0000 439.4200  $ Basket/Disk Opening
C Surfaces - Canister
401 RCC 0.0000 0.0000 0.0000 0.0000 0.0000 439.4200 83.1850   $ Cavity
402 RCC 0.0000 0.0000 -5.0800 0.0000 0.0000 464.8200 84.4550   $ Canister
C VCC Surfaces
501  RCC 0.0000 0.0000 -5.0800 0.0000 0.0000 5.0800 84.4549  $ Pedestal plate
502  RCC 0.0000 0.0000 -30.4800 0.0000 0.0000 25.4000 63.5000  $ Stand outer
503  RCC 0.0000 0.0000 -30.4800 0.0000 0.0000 25.4000 62.3888  $ Stand inner
504 9 RPP -100.3300 100.3300 -10.4775 10.4775 -33.0200 -16.5100   $ Connector plate A
505 10 RPP -100.3300 100.3300 -10.4775 10.4775 -33.0200 -16.5100   $ Connector plate B
506 9 RPP -99.0600 99.0600 -9.2075 9.2075 -33.0200 -16.5100   $ Air inlet angled wall A
507 10 RPP -99.0600 99.0600 -9.2075 9.2075 -33.0200 -16.5100   $ Air inlet angled wall B
508  RCC 0.0000 0.0000 -33.0200 0.0000 0.0000 2.5400 172.7200  $ Bottom plate outer
509  RCC 0.0000 0.0000 -33.0200 0.0000 0.0000 2.5400 100.3300  $ Connector radius
510  RCC 0.0000 0.0000 -33.0200 0.0000 0.0000 2.5400 63.5000  $ Bottom plate inner
511  RCC 0.0000 0.0000 -16.5100 0.0000 0.0000 530.8600 101.6000  $ VCC liner outer
512  RCC 0.0000 0.0000 -16.5100 0.0000 0.0000 530.8600 93.9800  $ VCC liner inner
513  RCC 0.0000 0.0000 -33.0200 0.0000 0.0000 549.9100 172.7200  $ Concrete
514  RCC 0.0000 0.0000 -133.0200 0.0000 0.0000 100.0000 172.7200  $ Concrete pad
515  PZ -16.5099        $ Lower concrete
516  PZ 488.4419        $ Upper concrete
```

Figure 5.A.7.6-3 Sample MCNP5 Input File – Concrete Cask

```
517  RPP -172.7200 172.7200 -63.5000 63.5000 -33.0200 -21.5900   $ Air inlet void X
518  RPP -63.5000 63.5000 -172.7200 172.7200 -33.0200 -21.5900   $ Air inlet void Y
519  RPP -172.7200 172.7200 -64.7700 64.7700 -33.0200 -21.5900   $ Air inlet wall X
520  RPP -64.7700 64.7700 -172.7200 172.7200 -33.0200 -21.5900   $ Air inlet wall Y
521  RCC 0.0000 0.0000 -33.0200 0.0000 0.0000 11.4300 100.3300  $ Air inlet divider
522  RPP -172.7200 172.7200 -64.7700 64.7700 -21.5900 -16.5100   $ Air inlet top X
523  RPP -64.7700 64.7700 -172.7200 172.7200 -21.5900 -16.5100   $ Air inlet top Y
524  RCC 0.0000 0.0000 -21.5900 0.0000 0.0000 5.0800 93.9800  $ Air inlet top plate radius
525  RPP -106.6800 106.6800 -6.9850 6.9850 -16.5100 -5.0800   $ Support rail exterior X
526  RPP -106.6800 106.6800 -4.4450 4.4450 -16.5100 -5.0800   $ Support rail interior X
527  RPP -6.9850 6.9850 -106.6800 106.6800 -16.5100 -5.0800   $ Support rail exterior Y
528  RPP -4.4450 4.4450 -106.6800 106.6800 -16.5100 -5.0800   $ Support rail interior Y
529  RCC 0.0000 0.0000 514.3500 0.0000 0.0000 2.5400 109.2200  $ Top flange
530  CZ 95.8850          $ Top flange ID
531  RCC 0.0000 0.0000 516.8900 0.0000 0.0000 1.9050 109.2200  $ Lid top
532  RCC 0.0000 0.0000 501.5230 0.0000 0.0000 15.3670 93.3450  $ Lid shell
533  RCC 0.0000 0.0000 502.1580 0.0000 0.0000 14.7320 92.7100  $ Lid concrete
534  RPP -172.7200 172.7200 -63.5000 63.5000 489.0770 499.2370   $ Air outlet void X
535  RPP -63.5000 63.5000 -172.7200 172.7200 489.0770 499.2370   $ Air outlet void Y
536  RPP -172.7200 172.7200 -64.7700 64.7700 488.4420 499.8720   $ Air outlet steel X
537  RPP -64.7700 64.7700 -172.7200 172.7200 488.4420 499.8720   $ Air outlet steel Y
538  RPP -93.9800 93.9800 -0.4432 0.4432 169.6720 474.4720   $ Standoff outer 1
539 11 RPP -93.9800 93.9800 -0.4432 0.4432 169.6720 474.4720   $ Standoff outer 2
540 12 RPP -93.9800 93.9800 -0.4432 0.4432 169.6720 474.4720   $ Standoff outer 3
541 9 RPP -93.9800 93.9800 -0.4432 0.4432 169.6720 474.4720   $ Standoff outer 4
542 13 RPP -93.9800 93.9800 -0.4432 0.4432 169.6720 474.4720   $ Standoff outer 5
543 14 RPP -93.9800 93.9800 -0.4432 0.4432 169.6720 474.4720   $ Standoff outer 6
544  RPP -0.4432 0.4432 -93.9800 93.9800 169.6720 474.4720   $ Standoff outer 7
545 11 RPP -0.4432 0.4432 -93.9800 93.9800 169.6720 474.4720   $ Standoff outer 8
546 12 RPP -0.4432 0.4432 -93.9800 93.9800 169.6720 474.4720   $ Standoff outer 9
547 9 RPP -0.4432 0.4432 -93.9800 93.9800 169.6720 474.4720   $ Standoff outer 10
548 13 RPP -0.4432 0.4432 -93.9800 93.9800 169.6720 474.4720   $ Standoff outer 11
549 14 RPP -0.4432 0.4432 -93.9800 93.9800 169.6720 474.4720   $ Standoff outer 12
550  RPP -86.3600 86.3600 -0.4432 0.4432 169.6720 474.4720   $ Standoff inner 1
551 11 RPP -86.3600 86.3600 -0.4432 0.4432 169.6720 474.4720   $ Standoff inner 2
552 12 RPP -86.3600 86.3600 -0.4432 0.4432 169.6720 474.4720   $ Standoff inner 3
553 9 RPP -86.3600 86.3600 -0.4432 0.4432 169.6720 474.4720   $ Standoff inner 4
554 13 RPP -86.3600 86.3600 -0.4432 0.4432 169.6720 474.4720   $ Standoff inner 5
555 14 RPP -86.3600 86.3600 -0.4432 0.4432 169.6720 474.4720   $ Standoff inner 6
556  RPP -0.4432 0.4432 -86.3600 86.3600 169.6720 474.4720   $ Standoff inner 7
557 11 RPP -0.4432 0.4432 -86.3600 86.3600 169.6720 474.4720   $ Standoff inner 8
558 12 RPP -0.4432 0.4432 -86.3600 86.3600 169.6720 474.4720   $ Standoff inner 9
559 9 RPP -0.4432 0.4432 -86.3600 86.3600 169.6720 474.4720   $ Standoff inner 10
560 13 RPP -0.4432 0.4432 -86.3600 86.3600 169.6720 474.4720   $ Standoff inner 11
561 14 RPP -0.4432 0.4432 -86.3600 86.3600 169.6720 474.4720   $ Standoff inner 12
C VCC Rebar Surfaces
562  TZ 0.0000 0.0000 26.8654 106.9975 0.9525 0.9525   $ Inner hoop 1
563  TZ 0.0000 0.0000 65.1608 106.9975 0.9525 0.9525   $ Inner hoop 2
564  TZ 0.0000 0.0000 103.4562 106.9975 0.9525 0.9525   $ Inner hoop 3
565  TZ 0.0000 0.0000 141.7515 106.9975 0.9525 0.9525   $ Inner hoop 4
566  TZ 0.0000 0.0000 180.0469 106.9975 0.9525 0.9525   $ Inner hoop 5
567  TZ 0.0000 0.0000 218.3423 106.9975 0.9525 0.9525   $ Inner hoop 6
568  TZ 0.0000 0.0000 256.6377 106.9975 0.9525 0.9525   $ Inner hoop 7
569  TZ 0.0000 0.0000 294.9331 106.9975 0.9525 0.9525   $ Inner hoop 8
570  TZ 0.0000 0.0000 333.2285 106.9975 0.9525 0.9525   $ Inner hoop 9
571  TZ 0.0000 0.0000 371.5238 106.9975 0.9525 0.9525   $ Inner hoop 10
572  TZ 0.0000 0.0000 409.8192 106.9975 0.9525 0.9525   $ Inner hoop 11
573  TZ 0.0000 0.0000 448.1146 106.9975 0.9525 0.9525   $ Inner hoop 12
574  TZ 0.0000 0.0000 486.4100 106.9975 0.9525 0.9525   $ Inner hoop 13
575  TZ 0.0000 0.0000 -1.2700 162.2425 0.9525 0.9525   $ Outer hoop 1
576  TZ 0.0000 0.0000 8.8900 162.2425 0.9525 0.9525   $ Outer hoop 2
577  TZ 0.0000 0.0000 19.0500 162.2425 0.9525 0.9525   $ Outer hoop 3
578  TZ 0.0000 0.0000 29.2100 162.2425 0.9525 0.9525   $ Outer hoop 4
579  TZ 0.0000 0.0000 39.3700 162.2425 0.9525 0.9525   $ Outer hoop 5
580  TZ 0.0000 0.0000 49.5300 162.2425 0.9525 0.9525   $ Outer hoop 6
581  TZ 0.0000 0.0000 59.6900 162.2425 0.9525 0.9525   $ Outer hoop 7
582  TZ 0.0000 0.0000 69.8500 162.2425 0.9525 0.9525   $ Outer hoop 8
583  TZ 0.0000 0.0000 80.0100 162.2425 0.9525 0.9525   $ Outer hoop 9
584  TZ 0.0000 0.0000 90.1700 162.2425 0.9525 0.9525   $ Outer hoop 10
585  TZ 0.0000 0.0000 100.3300 162.2425 0.9525 0.9525   $ Outer hoop 11
586  TZ 0.0000 0.0000 110.4900 162.2425 0.9525 0.9525   $ Outer hoop 12
587  TZ 0.0000 0.0000 120.6500 162.2425 0.9525 0.9525   $ Outer hoop 13
588  TZ 0.0000 0.0000 130.8100 162.2425 0.9525 0.9525   $ Outer hoop 14
589  TZ 0.0000 0.0000 140.9700 162.2425 0.9525 0.9525   $ Outer hoop 15
590  TZ 0.0000 0.0000 151.1300 162.2425 0.9525 0.9525   $ Outer hoop 16
591  TZ 0.0000 0.0000 161.2900 162.2425 0.9525 0.9525   $ Outer hoop 17
592  TZ 0.0000 0.0000 171.4500 162.2425 0.9525 0.9525   $ Outer hoop 18
```

Figure 5.A.7.6-3 Sample MCNP5 Input File – Concrete Cask

```
593  TZ 0.0000 0.0000 181.6100 162.2425 0.9525 0.9525   $ Outer hoop 19
594  TZ 0.0000 0.0000 191.7700 162.2425 0.9525 0.9525   $ Outer hoop 20
595  TZ 0.0000 0.0000 201.9300 162.2425 0.9525 0.9525   $ Outer hoop 21
596  TZ 0.0000 0.0000 212.0900 162.2425 0.9525 0.9525   $ Outer hoop 22
597  TZ 0.0000 0.0000 222.2500 162.2425 0.9525 0.9525   $ Outer hoop 23
598  TZ 0.0000 0.0000 232.4100 162.2425 0.9525 0.9525   $ Outer hoop 24
599  TZ 0.0000 0.0000 242.5700 162.2425 0.9525 0.9525   $ Outer hoop 25
600  TZ 0.0000 0.0000 252.7300 162.2425 0.9525 0.9525   $ Outer hoop 26
601  TZ 0.0000 0.0000 262.8900 162.2425 0.9525 0.9525   $ Outer hoop 27
602  TZ 0.0000 0.0000 273.0500 162.2425 0.9525 0.9525   $ Outer hoop 28
603  TZ 0.0000 0.0000 283.2100 162.2425 0.9525 0.9525   $ Outer hoop 29
604  TZ 0.0000 0.0000 293.3700 162.2425 0.9525 0.9525   $ Outer hoop 30
605  TZ 0.0000 0.0000 303.5300 162.2425 0.9525 0.9525   $ Outer hoop 31
606  TZ 0.0000 0.0000 313.6900 162.2425 0.9525 0.9525   $ Outer hoop 32
607  TZ 0.0000 0.0000 323.8500 162.2425 0.9525 0.9525   $ Outer hoop 33
608  TZ 0.0000 0.0000 334.0100 162.2425 0.9525 0.9525   $ Outer hoop 34
609  TZ 0.0000 0.0000 344.1700 162.2425 0.9525 0.9525   $ Outer hoop 35
610  TZ 0.0000 0.0000 354.3300 162.2425 0.9525 0.9525   $ Outer hoop 36
611  TZ 0.0000 0.0000 364.4900 162.2425 0.9525 0.9525   $ Outer hoop 37
612  TZ 0.0000 0.0000 374.6500 162.2425 0.9525 0.9525   $ Outer hoop 38
613  TZ 0.0000 0.0000 384.8100 162.2425 0.9525 0.9525   $ Outer hoop 39
614  TZ 0.0000 0.0000 394.9700 162.2425 0.9525 0.9525   $ Outer hoop 40
615  TZ 0.0000 0.0000 405.1300 162.2425 0.9525 0.9525   $ Outer hoop 41
616  TZ 0.0000 0.0000 415.2900 162.2425 0.9525 0.9525   $ Outer hoop 42
617  TZ 0.0000 0.0000 425.4500 162.2425 0.9525 0.9525   $ Outer hoop 43
618  TZ 0.0000 0.0000 435.6100 162.2425 0.9525 0.9525   $ Outer hoop 44
619  TZ 0.0000 0.0000 445.7700 162.2425 0.9525 0.9525   $ Outer hoop 45
620  TZ 0.0000 0.0000 455.9300 162.2425 0.9525 0.9525   $ Outer hoop 46
621  TZ 0.0000 0.0000 466.0900 162.2425 0.9525 0.9525   $ Outer hoop 47
622  TZ 0.0000 0.0000 476.2500 162.2425 0.9525 0.9525   $ Outer hoop 48
623  TZ 0.0000 0.0000 486.4100 162.2425 0.9525 0.9525   $ Outer hoop 49
624  TZ 0.0000 0.0000 496.5700 162.2425 0.9525 0.9525   $ Outer hoop 50
625  RCC 0.0000 0.0000 -11.4300 0.0000 0.0000 497.8400 0.9525  $ Vertical
C Storage Cask & Pad Container
699  RCC  0.0000  0.0000  -133.0200  0.0000  0.0000  651.8150  172.7201
C Radial Detector DRA (Surface)
700  RCC  0.0000  0.0000  -33.0200  0.0000  0.0000  551.9150  172.8201
701  PZ  12.9729
702  PZ  58.9658
703  PZ  104.9588
704  PZ  150.9517
705  PZ  196.9446
706  PZ  242.9375
707  PZ  288.9304
708  PZ  334.9233
709  PZ  380.9163
710  PZ  426.9092
711  PZ  472.9021
C Radial Detector DRB (1ft)
800  RCC  0.0000  0.0000  -33.0200  0.0000  0.0000  582.3950  203.3001
801  PZ  15.5129
802  PZ  64.0458
803  PZ  112.5788
804  PZ  161.1117
805  PZ  209.6446
806  PZ  258.1775
807  PZ  306.7104
808  PZ  355.2433
809  PZ  403.7763
810  PZ  452.3092
811  PZ  500.8421
C Radial Detector DRC (1m)
900  RCC  0.0000  0.0000  -33.0200  0.0000  0.0000  651.9150  272.8201
901  PZ  10.4410
902  PZ  53.9020
903  PZ  97.3630
904  PZ  140.8240
905  PZ  184.2850
906  PZ  227.7460
907  PZ  271.2070
908  PZ  314.6680
909  PZ  358.1290
910  PZ  401.5900
911  PZ  445.0510
912  PZ  488.5120
913  PZ  531.9730
914  PZ  575.4340
```

Figure 5.A.7.6-3 Sample MCNP5 Input File – Concrete Cask

```
C Radial Detector DRD (2m)
1000  RCC  0.0000  0.0000  -33.0200  0.0000  0.0000  751.9150  372.8201
1001  PZ  4.5758
1002  PZ  42.1715
1003  PZ  79.7673
1004  PZ  117.3630
1005  PZ  154.9588
1006  PZ  192.5545
1007  PZ  230.1503
1008  PZ  267.7460
1009  PZ  305.3418
1010  PZ  342.9375
1011  PZ  380.5333
1012  PZ  418.1290
1013  PZ  455.7248
1014  PZ  493.3205
1015  PZ  530.9163
1016  PZ  568.5120
1017  PZ  606.1078
1018  PZ  643.7035
1019  PZ  681.2993
C Radial Detector DRE (4m)
1100  RCC  0.0000  0.0000  -33.0200  0.0000  0.0000  951.9150  572.8201
1101  PZ  14.5758
1102  PZ  62.1715
1103  PZ  109.7673
1104  PZ  157.3630
1105  PZ  204.9588
1106  PZ  252.5545
1107  PZ  300.1503
1108  PZ  347.7460
1109  PZ  395.3418
1110  PZ  442.9375
1111  PZ  490.5333
1112  PZ  538.1290
1113  PZ  585.7248
1114  PZ  633.3205
1115  PZ  680.9163
1116  PZ  728.5120
1117  PZ  776.1078
1118  PZ  823.7035
1119  PZ  871.2993

C
C Materials List - Common Materials - v3.0
C
C Homogenized Lower Nozzle
m1    24000 -0.190 25055 -0.020 26000 -0.695
      28000 -0.095
C Homogenized Lower Plenum
m2    24000 -1.0000E-03 50000 -1.5000E-02
      26000 -1.2500E-03 7014 -5.0000E-04
      40000 -9.8225E-01
C Homogenized UO2 Fuel
m3    92235 -3.6495E-02 40000 -1.6893E-01 24000 -1.7199E-04
      92238 -6.9340E-01 50000 -2.5798E-03 7014 -8.5993E-05
      8016 -9.8121E-02 26000 -2.1498E-04
C Homogenized Upper Plenum
m4    24000 -1.3648E-01 50000 -4.2477E-03 25055 -1.4336E-02
      26000 -4.9854E-01 7014 -1.4159E-04 28000 -6.8098E-02
      40000 -2.7816E-01
C Homogenized Upper Nozzle
m5    24000 -0.190 25055 -0.020 26000 -0.695
      28000 -0.095
C Water
m6    1001 2 8016 1
C Stainless Steel
m7    24000 -0.190 25055 -0.020 26000 -0.695
      28000 -0.095
C Carbon Steel
m8    26000 -0.99 6012 -0.01
C Aluminum
m9    13027 -1.0
C Lead
m10   82000 -1.0
C NS-4-FR
m11   5010 -9.3127E-04 13027 -2.1420E-01 6000 -2.7627E-01
```

Figure 5.A.7.6-3 Sample MCNP5 Input File – Concrete Cask

```
      5011 -3.7721E-03 1001 -6.0012E-02 7014 -1.9815E-02
      8016 -4.2500E-01
C Concrete
m12   26000 -0.014 20000 -0.044 14000 -0.337
      1001 -0.010 8016 -0.532 11023 -0.029
      13027 -0.034
C Vent Port Middle Cylinder
m13   24000 -0.190 25055 -0.020 26000 -0.695
      28000 -0.095
C Balsa
m14   6012 6 1001 10 8016 5
C NS-4-FR (Accident)
m15   5010 -1.7596E-03 13027 -4.3257E-01 6012 -5.5793E-01
      5011 -7.7389E-03
C Heat Fin
m16   24000 -1.0857E-01 25055 -1.1429E-02 26000 -3.9714E-01
      28000 -5.4286E-02 29063 -2.9644E-01 29065 -1.3213E-01
phys:p 100 0 0 0 1    $ Disable Doppler energy broadening
C
C Cell Importances
C
imp:p 1 273r 0
C
C Source Definition - Response - Fuel Gamma Response to Group 7
C
sdef x=d1 y=d2 z=d3 erg=d4 cell=699:533:401:d5:101:3
si1   -10.70102 10.70102
sp1   0 1
si2   -10.70102 10.70102
sp2   0 1
si3   8.5979 28.9179 49.2379 69.5579 89.8779 110.1979 130.5179
      150.8379 171.1579 191.4779 211.7979 232.1179 252.4379 272.7579
      293.0779 313.3979 333.7179 354.0379 374.3579
sp3   0.0000 0.6373 0.9687 1.0759 1.1050 1.1100 1.1080
      1.1040 1.0990 1.0960 1.0960 1.0970 1.0980 1.0970
      1.0880 1.0609 0.9728 0.7393 0.4473
si4   3.000E+00 4.000E+00
sp4   0 1
C Source Information
si5 1     301 302 303
      304 305 306 307 308
      309 310 311 312 313
      314 315 316 317 318
          319 320 321
C Source Probability
sp5       1.0 1.0 1.0
      1.0 1.0 1.0 1.0 1.0
      1.0 1.0 1.0 1.0 1.0
      1.0 1.0 1.0 1.0 1.0
          1.0 1.0 1.0
mode p
ctme 60
C
C ANSI/ANS-6.1.1-1977 - Gamma Flux-to-Dose Conversion Factors
C (mrem/hr)/(photons/cm2-sec)
C
de0   0.01 0.03 0.05 0.07 0.1 0.15 0.2
      0.25 0.3 0.35 0.4 0.45 0.5 0.55
      0.6 0.65 0.7 0.8 1 1.4 1.8
      2.2 2.6 2.8 3.25 3.75 4.25 4.75
      5 5.25 5.75 6.25 6.75 7.5 9
      11 13 15
df0   3.96E-03 5.82E-04 2.90E-04 2.58E-04 2.83E-04 3.79E-04 5.01E-04
      6.31E-04 7.59E-04 8.78E-04 9.85E-04 1.08E-03 1.17E-03 1.27E-03
      1.36E-03 1.44E-03 1.52E-03 1.68E-03 1.98E-03 2.51E-03 2.99E-03
      3.42E-03 3.82E-03 4.01E-03 4.41E-03 4.83E-03 5.23E-03 5.60E-03
      5.80E-03 6.01E-03 6.37E-03 6.74E-03 7.11E-03 7.66E-03 8.77E-03
      1.03E-02 1.18E-02 1.33E-02
C
C Weight Window Generation - Radial
C
wwg 2 0 0 0 0
wwp:p 5 3 5 0 -1 0
mesh geom=cyl ref=57 0 197 origin=0.1 0.1 -134
     imesh 83.2 84.5 94.0 101.6 172.7 672.7
     iints 5 1 1 2 5 1
     jmesh 101 104 112 118 129 139 148 513 545 579 599 636 651 653 1153
```

Figure 5.A.7.6-3 Sample MCNP5 Input File – Concrete Cask

```
     jints 1 1 1 1 1 1 1 1 1 1 1 1 1 1 1
     kmesh 1
     kints 1
C wwge:p  1e-3 1 20
fc2 Radial Surface Tally
f2:p +700.1
fm2 2.1000E+01
fs2  -701  -702  -703  -704  -705  -706
     -707  -708  -709  -710  -711  T
tf2
fc12 Radial 1ft Tally
f12:p +800.1
fm12 2.1000E+01
fs12  -801  -802  -803  -804  -805  -806
     -807  -808  -809  -810  -811  T
tf12
fc22 Radial 1m Tally
f22:p +900.1
fm22 2.1000E+01
fs22  -901  -902  -903  -904  -905  -906
     -907  -908  -909  -910  -911  -912
     -913  -914  T
tf22
fc32 Radial 2m Tally
f32:p +1000.1
fm32 2.1000E+01
fs32  -1001  -1002  -1003  -1004  -1005  -1006
     -1007  -1008  -1009  -1010  -1011  -1012
     -1013  -1014  -1015  -1016  -1017  -1018
     -1019  T
tf32
fc42 Radial 4m Tally
f42:p +1100.1
fm42 2.1000E+01
fs42  -1101  -1102  -1103  -1104  -1105  -1106
     -1107  -1108  -1109  -1110  -1111  -1112
     -1113  -1114  -1115  -1116  -1117  -1118
     -1119  T
tf42
C
C
C Print Control
C
prdmp -30 -60 1 2
print
C
C Random Number Generator
C
rand gen=2 seed=19073486328125 stride=152917 hist=1
C
C Rotation Matrix
C
C 18 degree rotation around z-axis
*TR1 0.0 0.0 0.0 18 108 90 -72 18 90 90 90 0
C 36 degree rotation around z-axis
*TR2 0.0 0.0 0.0 36 126 90 -54 36 90 90 90 0
C 54 degree rotation around z-axis
*TR3 0.0 0.0 0.0 54 144 90 -36 54 90 90 90 0
C 72 degree rotation around z-axis
*TR4 0.0 0.0 0.0 72 162 90 -18 72 90 90 90 0
C 108 degree rotation around z-axis
*TR5 0.0 0.0 0.0 108 198 90 18 108 90 90 90 0
C 126 degree rotation around z-axis
*TR6 0.0 0.0 0.0 126 216 90 36 126 90 90 90 0
C 144 degree rotation around z-axis
*TR7 0.0 0.0 0.0 144 234 90 54 144 90 90 90 0
C 162 degree rotation around z-axis
*TR8 0.0 0.0 0.0 162 252 90 72 162 90 90 90 0
C 45 degree rotation around z-axis
*TR9 0.0 0.0 0.0 45 135 90 -45 45 90 90 90 0
C 135 degree rotation around z-axis
*TR10 0.0 0.0 0.0 135 225 90 45 135 90 90 90 0
C 15 degree rotation around z-axis
*TR11 0.0 0.0 0.0 15 105 90 -75 15 90 90 90 0
C 30 degree rotation around z-axis
*TR12 0.0 0.0 0.0 30 120 90 -60 30 90 90 90 0
C 60 degree rotation around z-axis
```

Figure 5.A.7.6-3 Sample MCNP5 Input File – Concrete Cask

```
*TR13 0.0 0.0 0.0 60 150 90 -30 60 90 90 90 0
C 75 degree rotation around z-axis
*TR14 0.0 0.0 0.0 75 165 90 -15 75 90 90 90 0
```

Figure 5.A.7.6-4 Sample NAC-CASC Input File

```
TAD 2x10 Storage Cask Array * Gamma * Axis Detectors
 0.0012250 0.3113383
***** Radial Gamma ***** Reference Angular Distribution *****
         0         0         0         0         0         1
         1
     0.000
         1
         1    19.000
         1   156.000
         1
         1    19.000
         1   156.000
         1
         1    19.000
         1    28.000
         1
         1    19.000
         1    28.000
         1
         1   156.000
         1    28.000
         1
         1   156.000
         1    28.000
         0
   -14.000    14.000   -78.000    78.000     0.000    19.000
        92
     0.000    25.000     3.000
     0.000    30.000     3.000
     0.000    35.000     3.000
     0.000    40.000     3.000
     0.000    45.000     3.000
     0.000    50.000     3.000
     0.000    55.000     3.000
     0.000    60.000     3.000
     0.000    65.000     3.000
     0.000    70.000     3.000
     0.000    75.000     3.000
     0.000    80.000     3.000
     0.000    85.000     3.000
     0.000    90.000     3.000
     0.000    95.000     3.000
     0.000   100.000     3.000
     0.000   125.000     3.000
     0.000   150.000     3.000
     0.000   175.000     3.000
     0.000   200.000     3.000
     0.000   225.000     3.000
     0.000   250.000     3.000
     0.000   275.000     3.000
     0.000   300.000     3.000
     0.000   325.000     3.000
     0.000   350.000     3.000
     0.000   375.000     3.000
     0.000   400.000     3.000
     0.000   425.000     3.000
     0.000   450.000     3.000
     0.000   475.000     3.000
     0.000   500.000     3.000
     0.000   525.000     3.000
     0.000   550.000     3.000
     0.000   575.000     3.000
     0.000   600.000     3.000
     0.000   625.000     3.000
     0.000   650.000     3.000
     0.000   675.000     3.000
     0.000   700.000     3.000
     0.000   725.000     3.000
     0.000   750.000     3.000
     0.000   775.000     3.000
     0.000   800.000     3.000
     0.000   825.000     3.000
     0.000   850.000     3.000
     0.000   875.000     3.000
     0.000   900.000     3.000
```

Figure 5.A.7.6-4 Sample NAC-CASC Input File

```
      0.000   925.000     3.000
      0.000   950.000     3.000
      0.000   975.000     3.000
      0.000  1000.000     3.000
      0.000  1025.000     3.000
      0.000  1050.000     3.000
      0.000  1075.000     3.000
      0.000  1100.000     3.000
      0.000  1125.000     3.000
      0.000  1150.000     3.000
      0.000  1175.000     3.000
      0.000  1200.000     3.000
      0.000  1225.000     3.000
      0.000  1250.000     3.000
      0.000  1275.000     3.000
      0.000  1300.000     3.000
      0.000  1325.000     3.000
      0.000  1350.000     3.000
      0.000  1375.000     3.000
      0.000  1400.000     3.000
      0.000  1425.000     3.000
      0.000  1450.000     3.000
      0.000  1475.000     3.000
      0.000  1500.000     3.000
      0.000  1525.000     3.000
      0.000  1550.000     3.000
      0.000  1575.000     3.000
      0.000  1600.000     3.000
      0.000  1625.000     3.000
      0.000  1650.000     3.000
      0.000  1675.000     3.000
      0.000  1700.000     3.000
      0.000  1725.000     3.000
      0.000  1750.000     3.000
      0.000  1775.000     3.000
      0.000  1800.000     3.000
      0.000  1825.000     3.000
      0.000  1850.000     3.000
      0.000  1875.000     3.000
      0.000  1900.000     3.000
      0.000  1925.000     3.000
      0.000  1950.000     3.000
      0.000  1975.000     3.000
      0.000  2000.000     3.000
         3        20         1         1        23         0        10
  1.00E-02  2.00E-02  5.00E-02  1.00E-01  2.00E-01  3.00E-01  4.00E-01  6.00E-01
  8.00E-01  1.00E+00  1.22E+00  1.44E+00  1.66E+00  2.00E+00  2.50E+00  3.00E+00
  4.00E+00  5.00E+00  6.50E+00  8.00E+00  1.00E+01  1.20E+01  1.40E+01
ONESET
tad_grad.dat
 1.983E+05 1.265E+07 7.307E+08 2.292E+09 1.163E+09 6.704E+08 6.495E+08 2.972E+08
 1.686E+08 1.243E+08 8.743E+07 3.515E+07 3.819E+07 4.602E+07 9.682E+06 1.592E+07
 1.266E+07 1.103E+07 1.152E+07 1.179E+06 4.008E+04 0.000E+00
 6.775E+09
CASK
RADIAL    CURVED        1      1000
CASK A-1
     1.000
    -8.000   -72.000     0.000     5.667     5.667     0.000    18.104    18.104
CASK B-1
     1.000
     8.000   -72.000     0.000     5.667     5.667     0.000    18.104    18.104
CASK A-2
     1.000
    -8.000   -56.000     0.000     5.667     5.667     0.000    18.104    18.104
CASK B-2
     1.000
     8.000   -56.000     0.000     5.667     5.667     0.000    18.104    18.104
CASK A-3
     1.000
    -8.000   -40.000     0.000     5.667     5.667     0.000    18.104    18.104
CASK B-3
     1.000
     8.000   -40.000     0.000     5.667     5.667     0.000    18.104    18.104
CASK A-4
     1.000
    -8.000   -24.000     0.000     5.667     5.667     0.000    18.104    18.104
```

Figure 5.A.7.6-4 Sample NAC-CASC Input File

```
CASK B-4
     1.000
     8.000   -24.000     0.000     5.667     5.667     0.000    18.104    18.104
CASK A-5
     1.000
    -8.000    -8.000     0.000     5.667     5.667     0.000    18.104    18.104
CASK B-5
     1.000
     8.000    -8.000     0.000     5.667     5.667     0.000    18.104    18.104
CASK A-6
     1.000
    -8.000     8.000     0.000     5.667     5.667     0.000    18.104    18.104
CASK B-6
     1.000
     8.000     8.000     0.000     5.667     5.667     0.000    18.104    18.104
CASK A-7
     1.000
    -8.000    24.000     0.000     5.667     5.667     0.000    18.104    18.104
CASK B-7
     1.000
     8.000    24.000     0.000     5.667     5.667     0.000    18.104    18.104
CASK A-8
     1.000
    -8.000    40.000     0.000     5.667     5.667     0.000    18.104    18.104
CASK B-8
     1.000
     8.000    40.000     0.000     5.667     5.667     0.000    18.104    18.104
CASK A-9
     1.000
    -8.000    56.000     0.000     5.667     5.667     0.000    18.104    18.104
CASK B-9
     1.000
     8.000    56.000     0.000     5.667     5.667     0.000    18.104    18.104
CASK A-10
     1.000
    -8.000    72.000     0.000     5.667     5.667     0.000    18.104    18.104
CASK B-10
     1.000
     8.000    72.000     0.000     5.667     5.667     0.000    18.104    18.104
***** Axial Gamma ***** Reference Angular Distribution *****
         1         0         1         1         0         0
         3        20         1         1        23         0        10
  1.00E-02  2.00E-02  5.00E-02  1.00E-01  2.00E-01  3.00E-01  4.00E-01  6.00E-01
  8.00E-01  1.00E+00  1.22E+00  1.44E+00  1.66E+00  2.00E+00  2.50E+00  3.00E+00
  4.00E+00  5.00E+00  6.50E+00  8.00E+00  1.00E+01  1.20E+01  1.40E+01
ONESET
tad_gaxl.dat
 1.899E+04 7.140E+05 4.164E+07 6.722E+08 8.887E+08 6.746E+08 7.632E+08 3.133E+08
 1.609E+08 1.066E+08 6.087E+07 9.874E+05 1.468E+06 1.910E+06 9.504E+05 1.232E+06
 1.077E+06 1.068E+06 2.149E+06 2.260E+05 2.225E+03 0.000E+00
 5.223E+09
CASK
AXIAL     DISK          1      1000
CASK A-1
     1.000
    -8.000   -72.000     0.000     5.667     5.667     0.000    18.104    18.104
CASK B-1
     1.000
     8.000   -72.000     0.000     5.667     5.667     0.000    18.104    18.104
CASK A-2
     1.000
    -8.000   -56.000     0.000     5.667     5.667     0.000    18.104    18.104
CASK B-2
     1.000
     8.000   -56.000     0.000     5.667     5.667     0.000    18.104    18.104
CASK A-3
     1.000
    -8.000   -40.000     0.000     5.667     5.667     0.000    18.104    18.104
CASK B-3
     1.000
     8.000   -40.000     0.000     5.667     5.667     0.000    18.104    18.104
CASK A-4
     1.000
    -8.000   -24.000     0.000     5.667     5.667     0.000    18.104    18.104
CASK B-4
     1.000
     8.000   -24.000     0.000     5.667     5.667     0.000    18.104    18.104
```

Figure 5.A.7.6-4 Sample NAC-CASC Input File

```
CASK A-5
     1.000
    -8.000    -8.000     0.000     5.667     5.667     0.000    18.104    18.104
CASK B-5
     1.000
     8.000    -8.000     0.000     5.667     5.667     0.000    18.104    18.104
CASK A-6
     1.000
    -8.000     8.000     0.000     5.667     5.667     0.000    18.104    18.104
CASK B-6
     1.000
     8.000     8.000     0.000     5.667     5.667     0.000    18.104    18.104
CASK A-7
     1.000
    -8.000    24.000     0.000     5.667     5.667     0.000    18.104    18.104
CASK B-7
     1.000
     8.000    24.000     0.000     5.667     5.667     0.000    18.104    18.104
CASK A-8
     1.000
    -8.000    40.000     0.000     5.667     5.667     0.000    18.104    18.104
CASK B-8
     1.000
     8.000    40.000     0.000     5.667     5.667     0.000    18.104    18.104
CASK A-9
     1.000
    -8.000    56.000     0.000     5.667     5.667     0.000    18.104    18.104
CASK B-9
     1.000
     8.000    56.000     0.000     5.667     5.667     0.000    18.104    18.104
CASK A-10
     1.000
    -8.000    72.000     0.000     5.667     5.667     0.000    18.104    18.104
CASK B-10
     1.000
     8.000    72.000     0.000     5.667     5.667     0.000    18.104    18.104
```

5.A.7.7 Axial Zoned Fuel/End Blanket Discussion

PWR fuel assemblies may contain axial zoned fuel (i.e., regions of lower or unenriched fuel at the top and bottom of the fuel pellet stack). These blankets have the potential of affecting overall source magnitudes, as sources are not constant as a function of initial enrichment at a fixed burnup and end blankets would tend to shift the burnup profile toward the fuel midplane. Minimum cool time tables are specified based on assembly average enrichment, including the axial end blankets. This section provides justification that the average enrichment represents a suitable value for zoned (end blanket) fuel to assure system safety and compliance with regulatory requirements.

Of primary interest in this evaluation is the fuel gamma source magnitude because the source magnitude, rather than profile, produces the cask overall surface radiation flux, which in turn is responsible for site boundary and site occupational exposure (i.e., dose peaking on the cask surface quickly diminishes as a function of distance from the cask surface; see dose profiles that demonstrate a disappearance of dose peaks within 4 meters of the cask surface). Additional focus is on the thermal heat load produced by the fuel assembly. Neutron source is not of a significant concern to system performance as Concrete Cask (site) exposures are dominated by gamma dose. Transfer Cask operations are primarily accomplished while the system is flooded, producing low neutron dose rates.

Axially zoned fuel assemblies are implemented in some PWR fuel assemblies. As the majority of the PWR profile data is based on nonzoned fuel, this section discusses PWR assemblies in detail. The conclusion drawn from the study is that there is no significant effect on source due to blankets.

To demonstrate the overall effect of the end blankets on source magnitudes, SAS2H evaluations are completed for 18 node profiles with nominal 6-inch unenriched end blankets. The initial evaluation set employs the fixed 1.11 peak profile defined in Section 5.A.3 and compares the results of the 18 node analysis (one SAS2H run at each node-defined burnup) of assemblies with and without axial end blankets, where the source without blanket is based on the average assembly enrichment. To investigate the effect of profile changes, a zoned (axial end blanket) profile was extracted from YAEC-1937 for a Westinghouse fuel assembly at a single plant (Millstone). The database for this plant contained information on both zoned and uniform enriched assembly profiles. The zoned profile case was then processed through SAS2H in 18 nodes. Results for the 1.11 peak profile and zoned Millstone profiles were compared to the baseline shielding source discussed in Sections 5.A.2 through 5.A.4 (Figure 5.A.7.7-1).

The two evaluation sets are based on a 45 GWd/MTU burned assembly. The assembly is evaluated with a blanket-length-dependent uniform (average) enrichment and with a 4.3 wt % ^{235}U enriched center region and natural uranium blankets. This enrichment/burnup data set was chosen as it represents the Millstone assemblies within the profile database. Resulting source magnitudes for heat load, fuel gamma and fuel neutron source are included in Table 5.A.7.7-1. None of the evaluations demonstrates a significant change in source magnitude from the baseline analysis applying a uniform enrichment.

Also evaluated was a source term comparison for Millstone assemblies with and without axial blankets, each with its appropriate burnup profile. The results of this comparison are included in Table 5.A.7.7-2. The change for the Millstone data from a uniform to a zoned profile, with its higher peak, had no significant effect on source magnitudes.

Note that the burnup profile provided in the reference documentation is in 18 nodes (8 inches per node), while a typical blanket is 6 inches. This approximation introduces a slight discrepancy in the results that is particularly noticeable on fuel neutron source (which is significantly more affected by profile and enrichment changes than heat load and gamma source) and accounts for some of the variation in trends seen in the neutron source differential.

Figure 5.A.7.7-1 Millstone Sample Axial Burnup Profiles

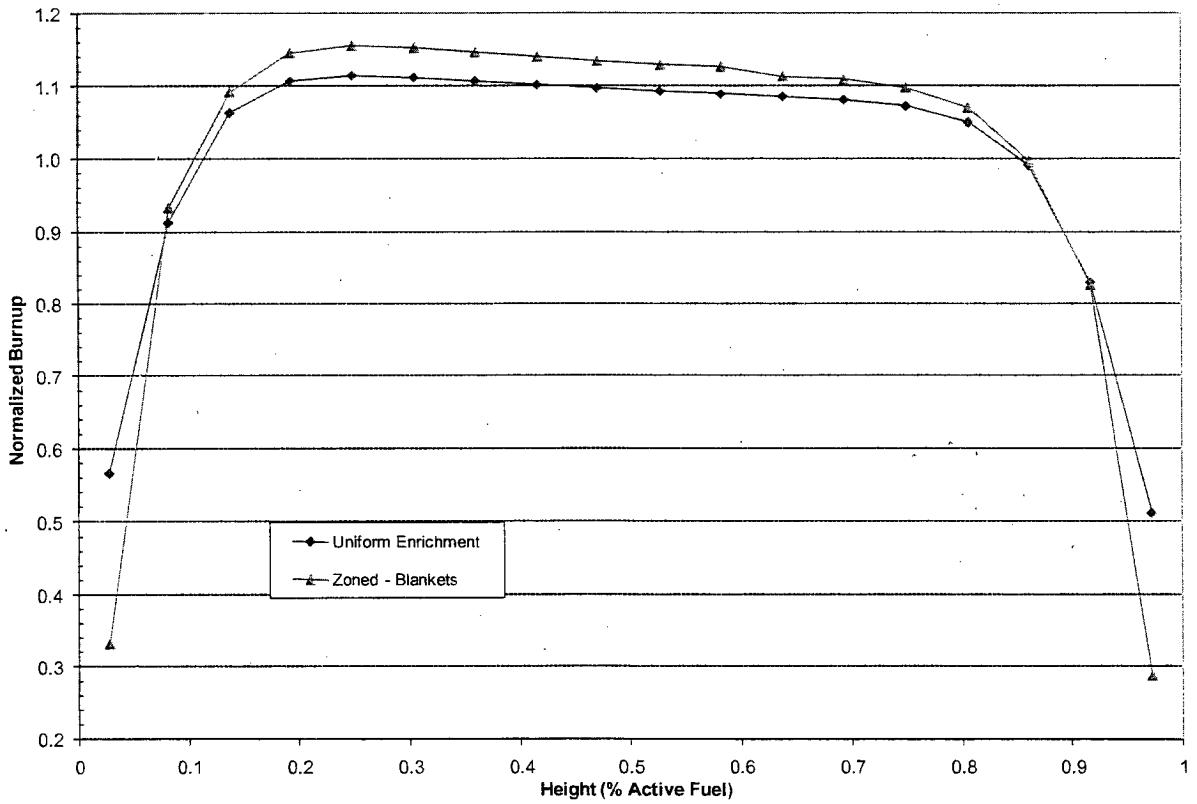

Table 5.A.7.7-1 Zoned Fuel and Profile Effects on Source Magnitudes

Source	Burnup Profile	Enrichment Pattern	Zone (Blanket) Length 6-inch
Heat (W)	1.11 Peak 1.11 Peak % Diff	Average Zoned --	1.026E+03 1.019E+03 -0.7%
Neutron (n/s)	1.11 Peak 1.11 Peak % Diff	Average Zoned --	3.710E+08 3.452E+08 -7.0%
Gamma (g/s)	1.11 Peak 1.11 Peak % Diff	Average Zoned --	5.482E+15 5.472E+15 -0.2%
Heat (W)	1.11 Peak Millstone - Zoned % Diff	Average Zoned --	1.026E+03 1.025E+03 -0.1%
Neutron (n/s)	1.11 Peak Millstone - Zoned % Diff	Average Zoned --	3.710E+08 3.612E+08 -2.7%
Gamma (g/s)	1.11 Peak Millstone - Zoned % Diff	Average Zoned --	5.482E+15 5.478E+15 -0.1%

Notes:

1. Millstone burnup profile applied in the analysis is illustrated in Figure 5.A.7.7-1.
2. Uniform (average) enrichment is 4.0 wt % ^{235}U for 6-inch blankets.

Table 5.A.7.7-2 Millstone Zoned Fuel Effects on Source Magnitudes

Source	Burnup Profile	Enrichment Pattern	Zone (Blanket) Length 6-inch
Heat (W)	Millstone - Uniform	Average	1.025E+03
	Millstone - Zoned	Zoned	1.025E+03
	% Diff	--	0.0%
Neutron (n/s)	Millstone - Uniform	Average	3.669E+08
	Millstone - Zoned	Zoned	3.612E+08
	% Diff	--	-1.6%
Gamma (g/s)	Millstone - Uniform	Average	5.481E+15
	Millstone - Zoned	Zoned	5.478E+15
	% Diff	--	-0.1%

Note: Millstone burnup profile applied in the analysis is illustrated in Figure 5.A.7.7-1.

5.A.7.8 Transfer Cask Moderator Condition Study

Primary shielding evaluations of the Transfer Cask applied a dry condition to the Canister cavity. This condition was based on the results of similar Canister/cask systems that have consistently produced higher dose rates for the dry condition (i.e., the shielding effect of the water within the Canister cavity more than offsets any increase in neutron source due to subcritical multiplication). To confirm this condition as bounding, shielding evaluations are performed for systems containing a canister flooded, a canister dry, and a canister filled 2/3 of the active fuel region. Increased subcritical multiplication is accounted for in the portion of the Canister volume flooded. Subcritical multiplication is based on an assumed k_{eff} of 0.8, which is significantly higher than spent fuel reactivity in the borated water flooded transfer cask condition. Both radial and axial dose rates are plotted for the configurations documented in Section 5.A.7.3 as producing bounding system dose rates. Bounding configurations are summarized as follows:

Surface	Fuel Type	Cool Time (yrs)	Assembly Average Burnup (GWd/MTU)	Initial Enrichment (wt% ^{235}U)
Radial	15a	5.4	45	2.7
Top	17b	5.5	45	2.7

The results in Figure 5.A.7.8-1 and Figure 5.A.7.8-2 demonstrate that the dry Canister configuration produces bounding Transfer Cask dose rates. Transfer Cask dose rates with a wet Canister are based on a layered weld shield with a total thickness of 6-inches.

Figure 5.A.7.8-1 Canister Flood Study – Radial Surface Dose Rate Profile [a]

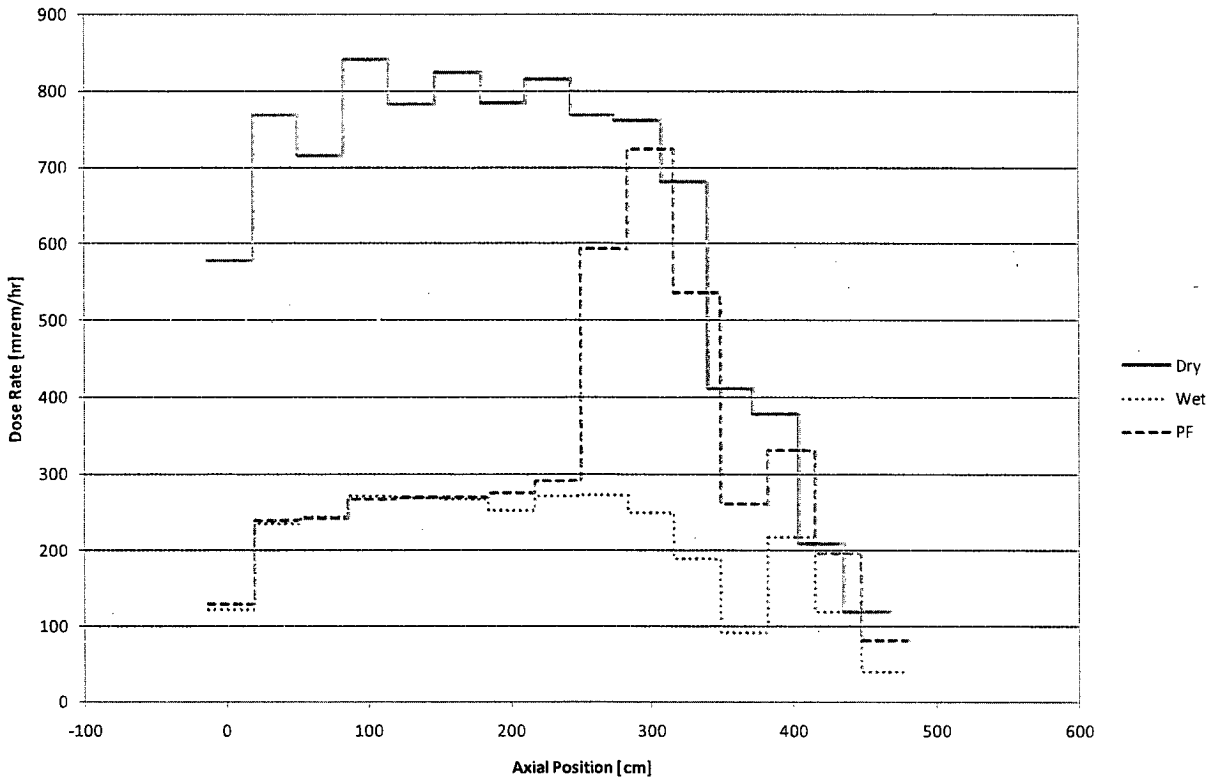

[a] Detector spacing varies because the Dry results are based on no weld shield and Wet and Partial Flooding (PF) results are based on inclusion of a 6-inch weld shield.

Figure 5.A.7.8-2 Canister Flood Study – Top Axial Surface Dose Rate Profile [a]

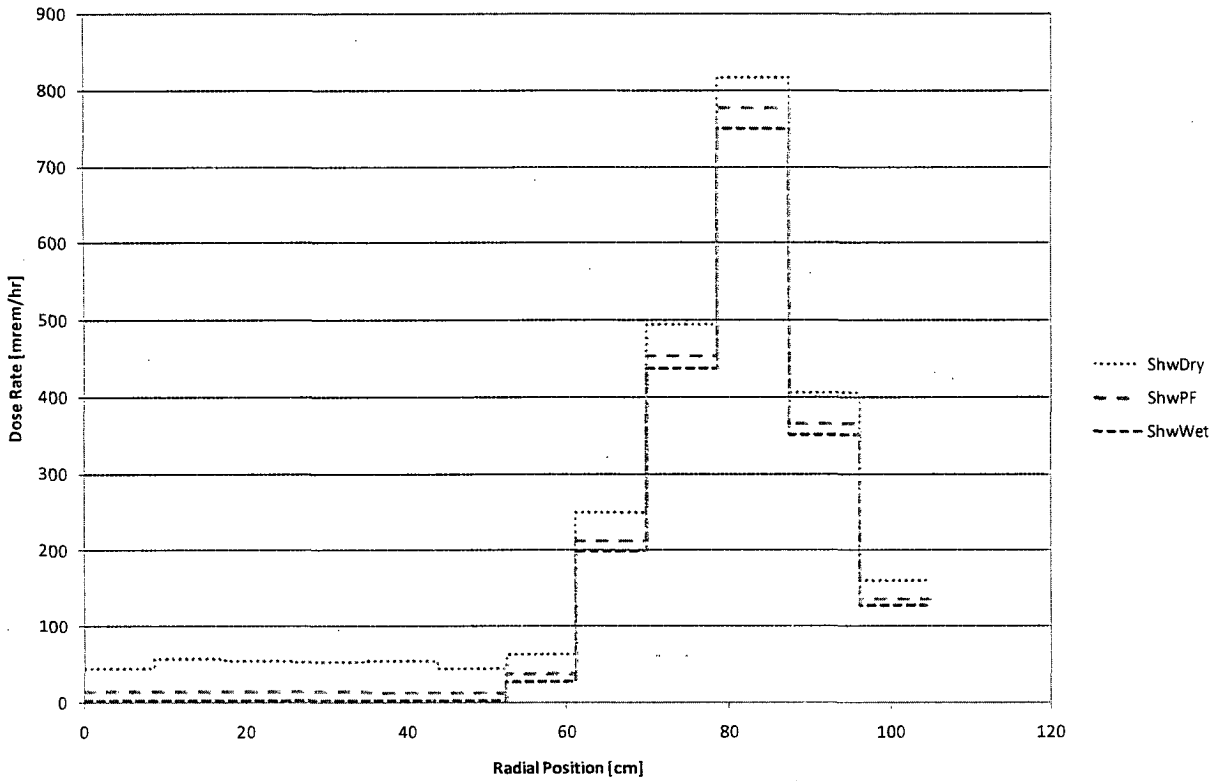

[a] Dose rates are based on a layered weld shield (Shw) with a total thickness of 6 inches.

5.A.7.9 Thermally Limited Cool Time

Minimum cool times and the additional cool time required for loading nonfuel hardware were calculated in previous sections based on a cask heat load of 25 kW, uniformly distributed over the 21 fuel assemblies. Thermal analysis limits the allowed content to a uniform loading of 22 kW. For any fuel type, burnup, initial enrichment, and cool time combination allowed at the 25 kW cask heat load, additional cool time and, therefore, reduced sources are associated with the derate to a 22 kW cask heat load. Table 5.A.7.9-1 and Table 5.A.7.9-2 contain the minimum cool time, minimum enrichment and maximum burnup loading configurations for a uniform heat load of 22 kW/cask. All cool times for the lower burnups (≤ 35 GWd/MTU) in Table 5.A.7.9-1 are five years.

Decay heat associated with loading nonfuel components requires an increase in the minimum fuel assembly cool time. Increased cool time as a function of fuel type is documented in Table 5.A.7.9-3.

Table 5.A.7.9-1 Low Burnup Fuel – Minimum Fuel Assembly Enrichment (5-Year Cool Time) for the UNITAD STORAGE SYSTEM

Max. Assembly Avg. Burnup (MWd/MTU)	**Min. Assembly Avg. Initial Enrichment (wt% ^{235}U)**
10,000	1.3
15,000	1.5
20,000	1.7
25,000	1.9
30,000	2.1
35,000	2.3

Table 5.A.7.9-2 Loading Table for UNITAD STORAGE SYSTEM PWR Fuel – 22 kW/Cask

Minimum Initial Assembly Avg. Enrichment wt % ^{235}U (E)	35 < Assembly Average Burnup ≤ 40 GWd/MTU Minimum Cooling Time (years)							
	CE 14×14	WE 14×14	WE 15×15	B&W 15×15	CE 15×15	CE 16×16	WE 17×17	B&W 17×17
2.5 ≤ E < 2.7	5.0	5.0	5.3	5.5	5.0	5.0	5.4	5.4
2.7 ≤ E < 2.9	5.0	5.0	5.2	5.4	5.0	5.0	5.3	5.3
2.9 ≤ E < 3.1	5.0	5.0	5.1	5.3	5.0	5.0	5.3	5.2
3.1 ≤ E < 3.3	5.0	5.0	5.1	5.2	5.0	5.0	5.2	5.2
3.3 ≤ E < 3.5	5.0	5.0	5.0	5.2	5.0	5.0	5.1	5.1
3.5 ≤ E < 3.7	5.0	5.0	5.0	5.1	5.0	5.0	5.0	5.0
3.7 ≤ E < 3.9	5.0	5.0	5.0	5.0	5.0	5.0	5.0	5.0
3.9 ≤ E < 4.1	5.0	5.0	5.0	5.0	5.0	5.0	5.0	5.0
4.1 ≤ E < 4.3	5.0	5.0	5.0	5.0	5.0	5.0	5.0	5.0
4.3 ≤ E < 4.5	5.0	5.0	5.0	5.0	5.0	5.0	5.0	5.0
4.5 ≤ E < 4.7	5.0	5.0	5.0	5.0	5.0	5.0	5.0	5.0
4.7 ≤ E < 4.9	5.0	5.0	5.0	5.0	5.0	5.0	5.0	5.0
E ≥ 4.9	5.0	5.0	5.0	5.0	5.0	5.0	5.0	5.0
Minimum Initial Assembly Avg. Enrichment wt % ^{235}U (E)	**40 < Assembly Average Burnup ≤ 45 GWd/MTU Minimum Cooling Time (years)**							
	CE 14×14	**WE 14×14**	**WE 15×15**	**B&W 15×15**	**Pal. 15×15**	**CE 16×16**	**WE 17×17**	**B&W 17×17**
2.7 ≤ E < 2.9	5.3	5.5	6.3	6.6	5.7	5.9	6.4	6.4
2.9 ≤ E < 3.1	5.2	5.4	6.2	6.5	5.6	5.8	6.3	6.3
3.1 ≤ E < 3.3	5.1	5.3	6.1	6.4	5.6	5.7	6.2	6.2
3.3 ≤ E < 3.5	5.0	5.2	6.0	6.2	5.5	5.7	6.1	6.1
3.5 ≤ E < 3.7	5.0	5.1	5.9	6.1	5.4	5.6	6.0	6.0
3.7 ≤ E < 3.9	5.0	5.0	5.9	6.0	5.3	5.5	6.0	6.0
3.9 ≤ E < 4.1	5.0	5.0	5.8	6.0	5.3	5.5	5.9	5.9
4.1 ≤ E < 4.3	5.0	5.0	5.7	5.9	5.2	5.4	5.9	5.8
4.3 ≤ E < 4.5	5.0	5.0	5.7	5.9	5.1	5.3	5.8	5.8
4.5 ≤ E < 4.7	5.0	5.0	5.6	5.8	5.1	5.3	5.8	5.7
4.7 ≤ E < 4.9	5.0	5.0	5.6	5.8	5.0	5.2	5.7	5.7
E ≥ 4.9	5.0	5.0	5.5	5.7	5.0	5.2	5.7	5.7

Table 5.A.7.9-3 Additional Cool Time Required for Loading Nonfuel Components for the UNITAD STORAGE SYSTEM

Assembly	Cool Time [years]		
	BP	TP	CEA
CE 14×14	--	--	0.1
WE 14×14	0.1	0.1	0.4
WE 15×15	0.1	0.1	0.6
B&W 15×15	0.1	0.1	0.1
CE 15×15	--	--	--
CE 16×16	--	--	0.1
WE 17×17	0.2	0.1	0.5
B&W 17×17	0.1	0.1	0.1
Maximum	0.2	0.1	0.6

5.A.8 References

1. 10 CFR 72, "Licensing Requirements for the Independent Storage of Spent Nuclear Fuel, High-Level Radioactive Waste, and Reactor Related Greater than Class C Waste," Code of Federal Regulations, US Government, Washington, DC.
2. 10 CFR 20, "Standards for Protection Against Radiation," Code of Federal Regulations, US Government, Washington, DC.
3. "MCNP – A General Monte Carlo N-Particle Transport Code, Version 5," X-5 Monte Carlo Team, Los Alamos National Laboratory, Los Alamos, NM, April 24, 2003.
4. SKYSHINE-III, "Calculation of the Effects of Structure Design on Neutron, Primary Gamma-Ray and Secondary Gamma-Ray Dose Rates in Air," RSICC Code Package CCC-289, Radiation Safety Information Computational Center, Oak Ridge, TN, February 1997.
5. ORNL/TM-2005/39, Rev. 5.1, Volume I, Section S2, "SAS2: A Coupled One-Dimensional Depletion and Shielding Analysis Module," I. C. Gauld and O. W. Herman, Oak Ridge National Laboratory, Oak Ridge, TN, November 2006.
6. ORNL/TM-2005/39, Rev. 5.1, "SCALE: A Modular Code System for Performing Standardized Computer Analyses for Licensing Evaluation," Oak Ridge National Laboratory, Oak Ridge, TN, November 2006.
7. ORNL/TM-2005/39, Rev. 5.1, Volume III, Section M4, "SCALE Cross Section Libraries," S. M. Bowman, *et al.*, Oak Ridge National Laboratory, Oak Ridge, TN, November 2006.
8. ORNL/TM-2005/39, Rev. 5.1, Volume II, Section F3, "XSDRNPM: A One-Dimensional Discrete Ordinates Code for Transport Analysis," N. M. Greene and L.M. Petrie, Oak Ridge National Laboratory, Oak Ridge, TN, November 2006.
9. ORNL/TM-2005/39, Rev. 5.1, Volume II, Section F7, "ORIGEN-S: SCALE System Module to Calculate Fuel Depletion, Actinide Transmutation, Fission Product Buildup and Decay, and Associated Radiation Source Terms," I. C. Gauld, *et al.*, Oak Ridge National Laboratory, Oak Ridge, TN, November 2006.
10. ORNL/TM-2005/39, Rev. 5.1, Volume III, Section M8, "Standard Composition Library," L. M. Petrie, *et al.*, Oak Ridge National Laboratory, Oak Ridge, TN, November 2006.
11. PNL-6906, "Spent Fuel Hardware: Characterization and 10 CFR 61 Classification for Waste Disposal," Pacific Northwest Laboratory, Richland, WA, Volume 1, June 1989.
12. "MCBEND, A Monte Carlo Program for General Radiation Transport Solutions, User Guide for Version 9," ANSWERS/MCBEND (94) 15, Serco Assurance, Didcot, UK, June 2000.

13. YAEC-1937, "Axial Burnup Profile Database for Pressurized Water Reactors," R. Cacciapouti and S. VanVolkinburg, Yankee Atomic Electric Company, Rowe, MA, August 1996.
14. YAEC-1918, "Axial Burnup Profile Database for Combustion Engineering 14×14 Fuel Design," R. Cacciapouti and S. VanVolkinburg, Yankee Atomic Electric Company, Rowe, MA, September 1995.
15. "PWR Axial Burnup Profile Database," R. Cacciapouti, S. VanVolkinburg, and L. Hassler, Proceeding of HLW Meeting, p739, 1994.
16. EPRI NO-6191, "Testing and Analyses of the TN-24P PWR Spent Fuel Dry Storage Cask Loaded with Consolidated Fuel," Electric Power Research Institute, Palo Alto, CA, February 1989.
17. PNL-6049 Vol. III, "COBRA-SFS: A Thermal-Hydraulic Analysis Computer Code," Pacific Northwest Laboratory, Richland, WA, December 1986.
18. Washington 2, "Preliminary Discharged Assembly Exposure Distributions," RFP C-3/400 / Addendum 03 Q-R No.5, Washington Public Power Supply System.
19. Regulatory Guide 1.109, "Calculation of Annual Doses to Man from Routine Releases of Reactor Effluents for the Purpose of Evaluating Compliance with 10 CFR 50 Appendix I," US Nuclear Regulatory Commission, Washington, DC, 1977.
20. Regulatory Guide 1.145, "Atmospheric Dispersion Models for Potential Accident Consequence Assessments at Nuclear Power Plants," US Nuclear Regulatory Commission, Washington, DC, 1983.
21. D. J. Whalen, *et al.*, "MCNP: Photon Benchmark Problems," LA-12196, September 1991.
22. D. J. Whalen, *et al.*, "MCNP: Neutron Benchmark Problems," LA-12212, September 1991.
23. NUREG/CR-6802, "Recommendations for Shielding Evaluations for Transport and Storage Packages," U.S. Nuclear Regulatory Commission, Washington, DC, May 2003.
24. EPRI TR-104329, "Evaluation of Shielding Analysis Methods in Spent Fuel Cask Environments," B. L. Broadhead, *et al.*, Electric Power Research Institute, Palo Alto, CA, May 1995.
25. NEACRP-L-339, "Summary of the Results of the Comparison of Calculations and Measurements for the TN 12 Flask Carried Out Under the NEACRP Intercomparison of Shielding Codes," H. F. Locke, Nuclear Energy Agency, Paris, France, 1992.
26. ANSI/ANS-6.1.1-1977, "Neutron and Gamma-Ray Flux-to-Dose Factors," American Nuclear Society, LaGrange Park, IL, approved March 17, 1977.

27. EPA Federal Guidance Report No. 11, "Limiting Values of Radionuclide Intake and Air Concentration and Dose Conversion Factors for Inhalation, Submersion, and Ingestion," US Environmental Protection Agency, Washington, DC, 1998.
28. EPA Federal Guidance Report No. 12, "External Exposure to Radionuclides in Air, Water, and Soil," US Environmental Protection Agency, Washington, DC, 1993.
29. NUREG-1400, "Air Sampling in the Workplace," US Nuclear Regulatory Commission, Washington, DC, September 1993.
30. DOE/RW-0184, "Characteristics of Spent Fuel High-Level Waste and Other Radioactive Wastes Which May Require Long-Term Isolation," U.S. Department of Energy, Washington, DC, December 1987.
31. ORNL/TM-12667, "Validation of the SCALE System for PWR Spent Fuel Isotopic Composition Analyses," Oak Ridge National Laboratory, March 1995.
32. ORNL/TM-13317, "An Extension of the Validation of SCALE (SAS2H) Isotopic Prediction for PWR Spent Fuel," Oak Ridge National Laboratory, September 1996.
33. NUREG/CR-6798, "Isotopic Analysis of High Burnup PWR Spent Fuel Samples from the Takahama-3 Reactor," US Nuclear Regulatory Commission, January 2003.
34. ORNL/TM-13315, "Validation of SCALE (SAS2H) Isotopic Predictions for BWR Spent Fuel," Oak Ridge National Laboratory, September 1998.
35. ORNL/TM-13687, "Prediction of the Isotopic Composition of UO_2 Fuel from a BWR: Analysis of the DU1 Sample from the Dodewaard Reactor," Oak Ridge National Laboratory, October 1998.
36. NUREG/CR-6701, "Review of Technical Issues Related to Predicting Composition and Source Terms for High-Burnup LWR Fuel," US Nuclear Regulatory Commission, January 2001.

THIS PAGE INTENTIONALLY LEFT BLANK

Table of Contents

6.0 CRITICALITY EVALUATION 6.1-1

6.1 Discussion and Results 6.1-1

6.2 Spent Fuel Loading 6.2-1

6.3 Criticality Model Specification 6.3-1
- 6.3.1 Calculational Methodology 6.3-1
- 6.3.2 Model Assumptions 6.3-3
- 6.3.3 Description of Calculational Models 6.3-5
- 6.3.4 Cask Regional Densities 6.3-7
  - 6.3.4.1 Active Fuel Region 6.3-8
  - 6.3.4.2 Cask Material 6.3-8
  - 6.3.4.3 Water Reflector Densities 6.3-9

6.4 Criticality Calculation 6.4-1
- 6.4.1 Calculation or Experimental Method 6.4-1
  - 6.4.1.1 Determination of Fuel Arrays for Criticality Analysis 6.4-1
  - 6.4.1.2 Most Reactive Fuel Assembly Determination 6.4-2
  - 6.4.1.3 Transfer Cask and Vertical Concrete Cask Criticality Analysis 6.4-4
- 6.4.2 Fuel Loading Optimization 6.4-11
- 6.4.3 Criticality Results 6.4-11
  - 6.4.3.1 Summary of Maximum Criticality Values 6.4-11
  - 6.4.3.2 Criticality Results for PWR Fuel 6.4-14
  - 6.4.3.3 Criticality Results for BWR Fuel 6.4-15
- 6.4.4 Fuel Assembly Lattice Dimension Variations 6.4-16
- 6.4.5 PWR and BWR Fuel Assembly Specific Maximum Initial Enrichments 6.4-18
  - 6.4.5.1 PWR Maximum Initial Enrichment – No Soluble Boron 6.4-18
  - 6.4.5.2 PWR Storage Cask Result Verification 6.4-18
  - 6.4.5.3 BWR Maximum Initial Enrichment – No Soluble Boron 6.4-19
- 6.4.6 PWR Soluble Boron Credit Evaluation 6.4-19
  - 6.4.6.1 Maximum Reactivity Geometry 6.4-19
  - 6.4.6.2 Soluble Boron and Moderator Density Study 6.4-20
  - 6.4.6.3 Maximum Allowed Initial Enrichment Search 6.4-20

Table of Contents (continued)

6.5 Critical Benchmark Experiments 6.5-1
6.5.1 SCALE 4.3 Benchmark Experiments and Applicability 6.5-1
6.5.1.1 Description of Experiments 6.5-3
6.5.1.2 Applicability of Experiments 6.5-3
6.5.1.3 Results of Benchmark Calculations 6.5-4
6.5.1.4 Trends 6.5-5
6.5.1.5 Comparison of NAC Method to NUREG/CR-6361 – SCALE 4.3 ..... 6.5-6
6.5.2 MONK Validation in Accordance with NUREG/CR-6361 ..... 6.5-26

6.6 Criticality Evaluation for Site Specific Spent Fuel 6.6-1
6.6.1 Criticality Evaluation for Maine Yankee Site Specific Spent Fuel 6.6.1-1
6.6.1.1 Maine Yankee Fuel Criticality Model 6.6.1-1
6.6.1.2 Maine Yankee Undamaged Spent Fuel 6.6.1-2
6.6.1.3 Maine Yankee Damaged Spent Fuel and Fuel Debris 6.6.1-7
6.6.1.4 Fuel Assemblies with a Source or Other Component in Guide Tubes 6.6.1-9
6.6.1.5 Maine Yankee Fuel Comparison to Criticality Benchmarks 6.6.1-11

6.7 References 6.7-1

6.8 CSAS Inputs 6.8-1

Appendix 6.A CRITICALITY EVALUATION UNITAD Storage System 6.A-i

List of Figures

Figure 6.3-1 KENO-Va PWR Basket Cell Model 6.3-10
Figure 6.3-2 KENO-Va BWR Basket Cell Model 6.3-11
Figure 6.3-3 PWR KENO-Va Transfer Cask Model 6.3-12
Figure 6.3-4 PWR KENO-Va Vertical Concrete Cask Model 6.3-13
Figure 6.3-5 BWR KENO-Va Transfer Cask Model 6.3-14
Figure 6.3-6 BWR KENO-Va Vertical Concrete Cask Model 6.3-15
Figure 6.3-7 PWR Basket Criticality Control Design 6.3-16
Figure 6.3-8 BWR Basket Criticality Control Design 6.3-16
Figure 6.3-9 Standard Transfer Cask Containing a PWR Basket and Canister 6.3-17
Figure 6.3-10 Vertical Concrete Cask Containing a BWR Basket and Canister 6.3-18
Figure 6.5.1-1 KENO-Va Validation – 27-Group Library Results: Frequency Distribution of k_{eff} Values 6.5-10
Figure 6.5.1-2 KENO-Va Validation – 27-Group Library Results: k_{eff} versus Enrichment 6.5-11
Figure 6.5.1-3 KENO-Va Validation – 27-Group Library Results: k_{eff} versus Rod Pitch 6.5-12
Figure 6.5.1-4 KENO-Va Validation – 27-Group Library Results: k_{eff} versus H/U Volume Ratio 6.5-13
Figure 6.5.1-5 KENO-Va Validation – 27-Group Library Results: k_{eff} versus Average Group of Fission 6.5-14
Figure 6.5.1-6 KENO-Va Validation – 27-Group Library Results: k_{eff} versus ^{10}B Loading for Flux Trap Criticals 6.5-15
Figure 6.5.1-7 KENO-Va Validation – 27-Group Library Results: k_{eff} versus Flux Trap Critical Gap Thickness 6.5-16
Figure 6.5.1-8 USLSTATS Output for Fuel Enrichment Study 6.5-17
Figure 6.5.2-1 MONK8A – JEF 2.2 Library Validation Statistics – k_{eff} versus Fuel Enrichment 6.5-28
Figure 6.5.2-2 MONK8A – JEF 2.2 Library – k_{eff} versus Rod Pitch 6.5-29
Figure 6.5.2-3 MONK8A – JEF 2.2 Library – k_{eff} versus H/U (fissile) Atom Ratio 6.5-30
Figure 6.5.2-4 MONK8A – JEF 2.2 Library – k_{eff} versus ^{10}B Plate Loading 6.5-31
Figure 6.5.2-5 MONK8A – JEF 2.2 Library – k_{eff} versus Mean Neutron Log(E) Causing Fission 6.5-32
Figure 6.5.2-6 MONK8A – JEF 2.2 Library – k_{eff} versus Cluster Gap Thickness 6.5-33

List of Figures (continued)

Figure 6.5.2-7 MONK8A – JEF 2.2 Library – k_{eff} versus Fuel Pellet Outside Diameter 6.5-34
Figure 6.5.2-8 MONK8A – JEF 2.2 Library – k_{eff} versus Fuel Rod Outside Diameter 6.5-35
Figure 6.5.2-9 MONK8A – JEF 2.2 Library – k_{eff} versus Soluble Boron PPM in Moderator 6.5-36
Figure 6.5.2-10 USLSTATS Output – k_{eff} versus Gap Thickness 6.5-37
Figure 6.6.1-1 24 Removed Fuel Rods - Diamond Shaped Geometry, Maine Yankee Site Specific Fuel 6.6.1-13
Figure 6.6.1-2 Consolidated Fuel Geometry, 113 Empty Fuel Rod Positions, Maine Yankee Site Specific Fuel 6.6.1-14
Figure 6.8-1 CSAS Input for Normal Conditions - Transfer Cask Containing PWR Fuel 6.8-2
Figure 6.8-2 CSAS Input for Accident Conditions - Transfer Cask Containing PWR Fuel 6.8-7
Figure 6.8-3 CSAS Input for Normal Conditions - Vertical Concrete Cask Containing PWR Fuel 6.8-12
Figure 6.8-4 CSAS Input for Accident Conditions - Vertical Concrete Cask Containing PWR Fuel 6.8-16
Figure 6.8-5 CSAS Input for Normal Conditions - Transfer Cask Containing BWR Fuel 6.8-20
Figure 6.8-6 CSAS Input for Accident Conditions - Transfer Cask Containing BWR Fuel 6.8-28
Figure 6.8-7 CSAS Input for Normal Conditions - Vertical Concrete Cask Containing BWR Fuel 6.8-36
Figure 6.8-8 CSAS Input for Accident Conditions - Vertical Concrete Cask Containing BWR Fuel 6.8-44
Figure 6.8-9 MONK8A Input for PWR Transfer Cask with Soluble Boron 6.8-52
Figure 6.8-10 MONK8A Input for BWR Transfer Cask 6.8-58

List of Tables

Table 6.1-1 PWR Fuel Assembly Maximum Allowed Enrichment 6.1-5
Table 6.1-2 BWR Fuel Assembly Maximum Allowed Enrichment – No Soluble Boron 6.1-6
Table 6.2-1 PWR Fuel Assembly Characteristics (Zirc-4 Clad) 6.2-2
Table 6.2-2 BWR Fuel Assembly Characteristics (Zirc-2 Clad) 6.2-3
Table 6.4-1 k_{eff} for Most Reactive PWR Fuel Assembly Determination 6.4-21
Table 6.4-2 k_{eff} for Highest Reactivity PWR Fuel Assemblies 6.4-21
Table 6.4-3 k_{eff} for Most Reactive BWR Fuel Assembly Determination (Standard Transfer Cask) 6.4-22
Table 6.4-4 k_{eff} for Most Reactive BWR Fuel Assembly Determination (Vertical Concrete Cask) 6.4-23
Table 6.4-5 PWR Fuel Tube in Basket Model KENO-Va Results for Geometric Tolerances and Mechanical Perturbations 6.4-24
Table 6.4-6 PWR Basket in Transfer Cask KENO-Va Results for Geometric Tolerances and Tube Movement 6.4-24
Table 6.4-7 PWR Basket in Vertical Concrete Cask KENO-Va Results for Geometric Tolerances and Tube Movement 6.4-25
Table 6.4-8 BWR Basket in Transfer Cask KENO-Va Results for Geometric Tolerances and Mechanical Perturbations 6.4-26
Table 6.4-9 BWR Basket in Vertical Concrete Cask KENO-Va Results for Geometric Tolerances and Mechanical Perturbations 6.4-27
Table 6.4-10 Heterogeneous vs. Homogeneous Enrichment Analysis Results 6.4-28
Table 6.4-11 PWR Single Standard Transfer Cask Analysis Criticality Results 6.4-29
Table 6.4-12 PWR Standard Transfer Cask Array Analysis Criticality Results - Normal Conditions 6.4-30
Table 6.4-13 PWR Standard Transfer Cask Array Analysis Criticality Results - Accident Conditions 6.4-30
Table 6.4-14 PWR Single Vertical Concrete Cask Analysis Criticality Results 6.4-31
Table 6.4-15 PWR Vertical Concrete Cask Array Analysis Criticality Results - Normal and Off-Normal Conditions 6.4-31
Table 6.4-16 PWR Vertical Concrete Cask Array Analysis Criticality Results - Accident Conditions 6.4-32
Table 6.4-17 BWR Single Standard Transfer Cask Analysis Criticality Results 6.4-32

List of Tables (continued)

Table 6.4-18 BWR Standard Transfer Cask Array Analysis Criticality Results - Normal Conditions 6.4-33
Table 6.4-19 BWR Standard Transfer Cask Array Analysis Criticality Results - Accident Conditions 6.4-33
Table 6.4-20 BWR Single Vertical Concrete Cask Analysis Criticality Results 6.4-34
Table 6.4-21 BWR Vertical Concrete Cask Array Analysis Criticality Results - Normal and Off-Normal Conditions 6.4-34
Table 6.4-22 BWR Vertical Concrete Cask Array Analysis Criticality Results - Accident Conditions 6.4-35
Table 6.4-23 PWR Lattice Parameter Study Criticality Analysis Results 6.4-36
Table 6.4-24 BWR Lattice Parameter Study Criticality Analysis Results 6.4-37
Table 6.4-25 PWR Maximum Allowable Enrichment – No Soluble Boron 6.4-38
Table 6.4-26 BWR Maximum Allowable Enrichment – No Soluble Boron 6.4-38
Table 6.4-27 Most Reactive Geometry for a Borated Water PWR Canister 6.4-39
Table 6.4-28 Moderator Density versus Reactivity for the Borated Water Cases 6.4-39
Table 6.4-29 PWR Maximum Allowable Enrichment – Soluble Boron 6.4-40
Table 6.5.1-1 KENO-Va and 27-Group Library Validation Statistics 6.5-19
Table 6.5.1-2 SCALE 4.3 Correlation Coefficient for Linear Curve-Fit of Critical Benchmarks 6.5-25
Table 6.5.1-3 SCALE 4.3 Range of Correlated Parameters of Most Reactive Configurations 6.5-25
Table 6.5.2-1 MONK8A Range of Correlated Parameters for Design Basis Fuel 6.5-39
Table 6.5.2-2 MONK8A – Correlation Coefficient for Linear Curve-Fit of Critical Benchmarks 6.5-39
Table 6.5.2-3 MONK8A – JEF 2.2 Library Validation Statistics 6.5-40
Table 6.6.1-1 Maine Yankee Standard Fuel Characteristics 6.6.1-15
Table 6.6.1-2 Maine Yankee Most Reactive Fuel Dimensions 6.6.1-15
Table 6.6.1-3 Maine Yankee Pellet Diameter Study 6.6.1-16
Table 6.6.1-4 Maine Yankee Annular Fuel Results 6.6.1-16
Table 6.6.1-5 Maine Yankee Removed Rod Results with Small Pellet Diameter 6.6.1-17
Table 6.6.1-6 Maine Yankee Removed Fuel Rod Results with Maximum Pellet Diameter 6.6.1-18
Table 6.6.1-7 Maine Yankee Fuel Rods in Guide Tube Results 6.6.1-19
Table 6.6.1-8 Maine Yankee Consolidated Fuel Empty Fuel Rod Position Results 6.6.1-20

List of Tables (continued)

Table 6.6.1-9 Fuel Can Infinite Height Model Results of Fuel-Water Mixture Between Rods 6.6.1-21
Table 6.6.1-10 Fuel Can Finite Model Results of Fuel-Water Mixture Outside Neutron Absorber Coverage 6.6.1-22
Table 6.6.1-11 Fuel Can Finite Model Results of Replacing All Rods with Fuel-Water Mixture 6.6.1-23
Table 6.6.1-12 Infinite Height Analysis of Maine Yankee Start-up Sources 6.6.1-24

THIS PAGE INTENTIONALLY LEFT BLANK

Appendix 6.A CRITICALITY EVALUATION
UNITAD Storage System

Table of Contents

Table of Contents 6.A-i
List of Figures 6.A-ii
List of Tables 6.A-iii

6.A CRITICALITY EVALUATION 6.A-1

6.A.1 Criticality Discussion and Results 6.A.1-1
6.A.1.1 UNITAD Storage System Criticality Evaluation 6.A.1-1

6.A.2 UNITAD Package Spent Fuel Loading 6.A.2-1

6.A.3 Criticality Model Specification 6.A.3-1
6.A.3.1 Description of Calculation Model 6.A.3-1
6.A.3.2 Model Assumptions 6.A.3-3
6.A.3.3 Cask Regional Densities 6.A.3-4

6.A.4 Criticality Calculation 6.A.4-1
6.A.4.1 Calculation Method 6.A.4-1
6.A.4.2 Fuel Loading Optimization 6.A.4-1
6.A.4.3 Criticality Results 6.A.4-3

6.A.5 Critical Benchmark Experiments 6.A.5-1
6.A.5.1 Benchmark Experimetns and Applicability 6.A.5-1
6.A.5.2 Results of Benchmark Calculations 6.A.5-3
6.A.5.3 Critical Benchmarks 6.A.5-9

6.A.6 References 6.A.6-1

6.A.7 Sample Input Files. 6.A.7-1

List of Figures

Figure 6.A.3-1 UNITAD PWR Structural Disk Sketch and Tube 6.A.3-5
Figure 6.A.3-2 UNITAD Canister 6.A.3-6
Figure 6.A.3-3 UNITAD Storage Cask Cross-Section Sketch 6.A.3-7
Figure 6.A.3-4 UNITAD Transfer Cask Cross-Section Sketch 6.A.3-8
Figure 6.A.4-1 Moderator Density Variation Study (700 ppm Boron) 6.A.4-10
Figure 6.A.5-1 USLSTATS Output for EALCF 6.A.5-5
Figure 6.A.5.3-1 k_{eff} versus Fuel Enrichment 6.A.5-11
Figure 6.A.5.3-2 k_{eff} versus Rod Pitch 6.A.5-11
Figure 6.A.5.3-3 k_{eff} versus Fuel Pellet Diameter 6.A.5-12
Figure 6.A.5.3-4 k_{eff} versus Fuel Rod Outside Diameter 6.A.5-12
Figure 6.A.5.3-5 k_{eff} versus Hydrogen/^{235}U Atom Ratio 6.A.5-13
Figure 6.A.6.4-6 k_{eff} versus Soluble Boron Concentration 6.A.5-13
Figure 6.A.5.3-7 k_{eff} versus Cluster Gap Thickness 6.A.5-14
Figure 6.A.5.3-8 k_{eff} versus ^{10}B Plate Loading 6.A.5-14
Figure 6.A.5.3-9 k_{eff} versus Energy of Average Neutron Lethargy Causing Fission 6.A.5-15
Figure 6.A.7-1 MCNP Transfer Cask Model – UNITAD PWR 21 Assembly – Maximum Reactivity Case 6.A.7-2
Figure 6.A.7-2 MCNP Storage Cask – UNITAD PWR 21 Assembly – Dry Exterior 6.A.7-10

List of Tables

Table 6.A.1-1 UNITAD PWR Fuel Assembly Characteristics 6.A.1-4
Table 6.A.2-1 Key PWR Fuel Assembly Characteristics 6.A.2-2
Table 6.A.3-1 PWR Fuel Assembly Materials 6.A.3-9
Table 6.A.3-2 Basket, Canister, Transfer and Storage Cask Material Densities and Compositions 6.A.3-10
Table 6.A.4-1 System Reactivity Response to PWR Fuel Type and Pellet to Clad Condition 6.A.4-11
Table 6.A.4-2 System Reactivity Response to PWR Fuel Type and Nonfuel Insert 6.A.4-12
Table 6.A.4-3 PWR Lattice Parameter Reactivity Study (Increased Variance) 6.A.4-13
Table 6.A.4-4 Component Tolerance Study – No Shift – WE17×17H2 Hybrid – 700 ppm Boron 6.A.4-14
Table 6.A.4-5 Component Shift Study – No Tolerance Applied -- WE17×17H2 Hybrid at 5.0 wt % ^{235}U and 700 ppm Boron 6.A.4-15
Table 6.A.4-6 Component Tolerance Study – Fuel in Shift – Fuel Plates Out – 700 ppm Boron 6.A.4-16
Table 6.A.4-7 Component Tolerance Study – Fuel in Shift (700 ppm Boron) 6.A.4-17
Table 6.A.4-8 Maximum Reactivity Configuration and Moderation Reactivity Summary for Fuel Hybrids (Including Fuel Geometry) 6.A.4-18
Table 6.A.4-9 Maximum Transfer and Storage System Reactivity Summary 6.A.4-18
Table 6.A.4-10 UNITAD Comparison to Code Range of Applicability 6.A.4-19
Table 6.A.5-1 Range of Applicability for Complete Set of 186 Benchmark Experiments 6.A.5-8
Table 6.A.5-2 Correlation Coefficients and USLs for Benchmark Experiments 6.A.5-8
Table 6.A.5.3-1 MCNP Validation Statistics 6.A.5-16

THIS PAGE INTENTIONALLY LEFT BLANK

6.A CRITICALITY EVALUATION

This appendix documents the method, input and results of the criticality analysis of the UNITAD Storage System containing PWR payloads. The results demonstrate that the effective neutron multiplication factor, k_{eff}, of the system under normal conditions, or off-normal and accident events, is less than 0.95 including biases and uncertainties. The system design meets the criticality requirements of 10 CFR 72 and Chapter 6 of NUREG-1536.

THIS PAGE INTENTIONALLY LEFT BLANK

6.A.1 Criticality Discussion and Results

6.A.1.1 UNITAD Storage System Criticality Evaluation

The UNITAD Storage System consists of a Canister, a Transfer Cask and a Concrete Cask. The system is designed to safely store up to 21 PWR fuel assemblies. The Canister is comprised of a stainless steel canister and a basket in which fuel is loaded. The PWR system includes two Canister lengths to store fuel assemblies without the requirement of spacers. Spacers may be employed to simplify loading or unloading operations. The Canister is loaded into the Concrete Cask for storage. A Transfer Cask is used for handling the Canister during loading of spent fuel. Fuel is loaded into the Canister contained within the Transfer Cask under water in the spent fuel pool. Once loaded with fuel, the Canister closure lid is welded and the Canister is drained, dried and backfilled with helium. The Transfer Cask is then used to move the Canister into or out of the Concrete Cask. The Transfer Cask provides shielding during the Canister loading and transfer operations. There are two lengths of Concrete Cask and Transfer Cask designed to accommodate the two length types of PWR Canisters.

Under normal conditions, such as loading in a spent fuel pool, moderator (water) is present in the Canister during the initial stages of fuel transfer. During draining and drying operations, moderator with varying density is present. Thus, the criticality evaluation of the Transfer Cask includes a variation in moderator density and a determination of optimum moderator density. Cask accident conditions are bounded by inclusion in the analysis of the most reactive mechanical basket configuration, as well as moderator intrusion into the fuel cladding. The PWR Canister is evaluated at minimum soluble boron levels during flooded conditions.

Structural analyses demonstrate that the Canister confinement boundary remains intact through all storage operating conditions. Therefore, moderator is not present in the Canister while it is in the Concrete Cask. However, access to the Concrete Cask interior environment is possible via the air inlets and outlets and the heat transfer annulus between the Canister and the cask steel liner. This access provides paths for moderator intrusion during a flood. Under off-normal and accident conditions, moderator intrusion into the convective heat transfer annulus is evaluated.

Individual fuel assemblies are held in place by the fuel tubes positioned in the support disks of the fuel basket. The fuel tubes are composed of borated stainless steel and are the primary neutron absorber in the system. The PWR basket design includes 21 fuel tubes forming assembly-sized openings. The borated stainless steel fuel tube plates must have a boron content

of 1.1 to 1.2 wt % which, based on a minimum 0.44-inch plate, converts to a minimum areal density of 0.017 ^{10}B g/cm^2. Criticality control of the borated stainless steel plates is augmented during loading/unloading operations by soluble boron in the loading/unloading pool water. A minimum 700 ppm soluble boron is applied in the system criticality evaluations.

MCNP, a three-dimensional Monte Carlo code, is used in the system criticality analysis. Evaluations are primarily based on the ENDF/B-VI continuous energy neutron cross-section library available in the MCNP distribution. Nuclides for which no ENDF/B-VI data is available are set to the latest cross-section sets available in the code distribution. The code and cross-section libraries are benchmarked by comparison to a range of critical experiments relevant to light water reactor fuel in storage and transport casks. An upper subcritical limit (USL) for the system is determined based on guidance given in NUREG/CR-6361.

Key assembly physical characteristics, maximum initial enrichment and soluble boron requirements for each PWR fuel assembly type are shown in Table 6.A.1-1. Assemblies may be placed within the Storage Cask at maximum initial enrichments of 5 wt % ^{235}U. PWR results represent the bounding values for fuel assemblies with and without nonfuel inserts in the guide tubes. Maximum enrichment is defined as peak pellet enrichment.

Assemblies are evaluated with a full, nominal set of fuel rods. Fuel rod (lattice) locations may contain filler rods. A filler rod must occupy, at a minimum, a volume equivalent to the fuel rod it displaces. Filler rods may be placed into the lattice after assembly in-core use or be designed to replace fuel rods prior to use, such as integral burnable absorber rods. For the soluble boron flooded Canister system, insertion of control components into the guide tubes or instrument tubes is evaluated. For unborated water cases, the removal of moderator from an undermoderated PWR assembly is conservative. In the soluble boron case, the removal of moderator also removes neutron absorber. The bounding, insert or no insert, case is applied to establish maximum reactivity results.

The PWR assembly must contain its nominal set of guide and instrument tubes. Analysis demonstrated that variations in the guide/instrument tube thickness and diameter have no significant effect on system reactivity.

The maximum multiplication factors (k_{eff} +2σ) are calculated, using conservative assumptions, for the Transfer Cask and the Concrete Cask. The USL applied to the analysis results is 0.9376 per Section 6.A.4.3. The results of the analyses are presented in detail in Section 6.A.4.3 and are

summarized as follows. The interior flooded case is based on a minimum content of 700 ppm soluble boron in the water. Exterior moderator does not contain any soluble boron.

Cask Model	Water Density (g/cc)		k_{eff}	σ	$k_{eff}+2\sigma$
	Canister Cavity	Exterior			
Transfer	0.9982	0.0001	0.91610	0.00056	0.91722
Transfer	0.0001	0.0001	0.38420	0.00040	0.38500
Transfer	0.0001	09982	0.36621	0.00041	0.36703
Storage	0.0001	0.0001	0.37246	0.00041	0.37326
Storage	0.0001	0.9982	0.34739	0.00041	0.34819

Analysis of moderator intrusion into the Storage Cask heat transfer annulus with the dry Canister shows a slight decrease in reactivity from the completely dry condition.

Table 6.A.1-1 UNITAD PWR Fuel Assembly Characteristics

Assembly Type	No. of Fuel Rods	No. of Guide Tubes[a]	Max Pitch (inch)	Min Clad OD (inch)	Min Clad Thick. (inch)	Max Pellet OD (inch)	Max Active Length (inch)	Max Load (MTU)
BW15H1	208	17	0.568	0.43	0.0265	0.3686	144.0	0.4858
BW15H2	208	17	0.568	0.43	0.025	0.3735	144.0	0.4988
BW15H3	208	17	0.568	0.428	0.023	0.3742	144.0	0.5006
BW15H4	208	17	0.568	0.414	0.022	0.3622	144.0	0.4690
BW17H1	264	25	0.502	0.377	0.022	0.3252	144.0	0.4799
CE14H1	176	5	0.58	0.44	0.026	0.3805	137.0	0.4167
CE15H1[b]	216	9	0.5500	0.4150	0.0225	0.3600	132.6	0.4385
CE16H1	236	5	0.5063	0.382	0.025	0.325	150.0	0.4463
WE14H1	179	17	0.556	0.40	0.0162	0.3674	145.2	0.4188
WE15H1	204	21	0.563	0.422	0.0242	0.3669	144.0	0.4720
WE15H2	204	21	0.563	0.417	0.0265	0.357	144.0	0.4469
WE17H1	264	25	0.496	0.372	0.0205	0.3232	144.0	0.4740
WE17H2	264	25	0.496	0.36	0.0225	0.3088	144.0	0.4327

Note: Assembly characteristics represent cold, unirradiated, nominal configurations.

[a] Combined number of guide and instrument tubes.
[b] CE15H1 contains eight solid guide bars on the assembly periphery rather than typical hollow guide tubes designed to allow insertion of control components.

6.A.2 UNITAD Package Spent Fuel Loading

The UNITAD Storage System is designed to store Canisters containing PWR spent fuel. Fuel assemblies to be stored in the system and their characteristics are shown in Table 6.A.2-1. The table contains data summaries from a wide range of fuel assembly types. Assemblies are restricted to those with zirconium alloy-clad fuel rods; no steel-clad assemblies are included in the data summary. To arrive at the summary tables, fuel assemblies are initially grouped by core configuration (WE, CE, B&W) and number of fuel rods in the lattice. Further subdivisions are then made to differentiate significant configuration changes affecting assembly reactivity. Statistically, significant assembly reactivity changes are typically associated with either moderator ratio or fuel mass changes (e.g., WE 17×17 Std to WE 17×17 OFA). Data in the tables may, therefore, represent either a single fuel assembly type or a fuel assembly group. Also included is a row containing an identifier linking each of the listed assembly types to analysis results presented in the following sections. For convenience, the fuel identifiers contain generic vendor initials. Fuels meeting the physical assembly characteristics are not restricted to any particular vendor.

PWR fuel assemblies may include inserts placed into the fuel assembly guide tubes. Fuel assembly inserts are nonfuel-bearing components such as thimble plugs (TPs, also referred to as flow mixers), in-core instrument thimbles, burnable poison rod assemblies (BPRAs), control element assemblies (CEAs/RCCAs), or disposable control rod assemblies (DCRAs). Stainless steel rod inserts may be used to displace water in PWR fuel assembly guide tube dashpots and may extend into the active fuel region. TPs do not extend into the active fuel region and, therefore, have no effect on the reactivity of the system. The remaining components displace moderator in the active fuel region. In these cases, the moderator contains soluble boron; therefore, its displacement has the potential to significantly affect system reactivity.

Any empty lattice (fuel rod) positions must be filled by a filler rod to preclude a potential increase in reactivity. A filler rod must occupy a volume equivalent to the fuel rod it displaces. Filler rods may be placed into the lattice after assembly in-core use or be designed to replace fuel rods prior to use, such as integral burnable absorber rods.

Table 6.A.2-1 Key PWR Fuel Assembly Characteristics

Fuel ID			CE14H1	CE15H1	CE16H1	WE14H1	WE15H1	WE15H2	WE17H1	WE17H2	BW15H1	BW15H2	BW15H3	BW15H4	BW17H1
No. Fuel Rods			176	216	236	179	204	204	264	264	208	208	208	208	264
Base Fuel Type[a]			CE,SPC	CE	CE	W,SPC	W,SPC	W,SPC	W,SPC	W,SPC	BW,FCF	BW,FCF	BW,FCF	BW,FCF	BW,FCF
Pitch	Max	(in)	0.5800	0.550	0.5063	0.5560	0.5630	0.5630	0.4960	0.4960	0.5680	0.5680	0.5680	0.5680	0.5020
	Min	(in)	0.5800	0.550	0.5063	0.5560	0.5630	0.5630	0.4960	0.4960	0.5680	0.5680	0.5680	0.5680	0.5020
Fuel Pellet OD	Max	(in)	0.3805	0.3600	0.3250	0.3674	0.3669	0.3570	0.3232	0.3088	0.3686	0.3735	0.3742	0.3622	0.3252
	Min	(in)	0.3700	0.3430	0.3250	0.3444	0.3565	0.3570	0.3225	0.3030	0.3686	0.3735	0.3707	0.3622	0.3232
Fuel Rod OD	Max	(in)	0.4400	0.417	0.3820	0.4240	0.4240	0.4170	0.3740	0.3600	0.4300	0.4300	0.4280	0.4140	0.3790
	Min	(in)	0.4400	0.415	0.3820	0.4000	0.4220	0.4170	0.3720	0.3600	0.4300	0.4300	0.4280	0.4140	0.3770
Fuel Clad Thick.	Max	(in)	0.0310	0.0300	0.0250	0.0300	0.0300	0.0265	0.0225	0.0250	0.0265	0.0250	0.0245	0.0220	0.0240
	Min	(in)	0.0260	0.0250	0.0250	0.0162	0.0242	0.0265	0.0205	0.0225	0.0265	0.0250	0.0230	0.0220	0.0220
Guide Tube OD	Max	(in)	1.115	0.449	0.980	0.481	0.544	0.484	0.482	0.482	0.493	0.493	0.493	0.493	0.420
	Min	(in)	1.115	0.449	0.970	0.481	0.484	0.484	0.482	0.480	0.493	0.493	0.493	0.493	0.420
GT Thick.	Max	(in)	0.040	N/A	0.035	0.034	0.017	0.017	0.015	0.016	0.016	0.015	0.014	0.014	0.020
	Min	(in)	0.036	N/A	0.035	0.017	0.015	0.017	0.014	0.015	0.016	0.015	0.014	0.014	0.018
Act. Fuel Length	Max	(in)	137.0	132.6	150.0	145.2	144.0	144.0	144.0	144.0	144.0	144.0	144.0	144.0	144.0
	Min	(in)	134.0	131.8	150.0	142.0	144.0	144.0	144.0	144.0	144.0	144.0	144.0	144.0	143.0
Fuel Mass	Max	(MTU)	0.4167	0.4385	0.4463	0.4188	0.4720	0.4469	0.4740	0.4327	0.4858	0.4988	0.5006	0.4690	0.4799
	Min	(MTU)	0.3854	0.3956	0.4463	0.3599	0.4457	0.4469	0.4720	0.4166	0.4858	0.4988	0.4913	0.4690	0.4707

- Fuel assembly characteristics represent cold, unirradiated, nominal fuel dimension.
- An instrument tube may be located in the center of the assembly. The instrument tube may have slightly different diameter and thickness than the guide tubes. As the instrument tube is limited to one per assembly, dimensional variations have no significant effect on system reactivity and are not listed here.
- Guide tubes may contain "dashpots" near the bottom of the active fuel region narrowing from the listed tube dimension. Stainless steel rod inserts may be installed to displace "dashpot water." Fuel assemblies containing these stainless steel rod inserts are addressed as a fuel assembly containing a nonfuel insert.
- Assemblies may contain unenriched axial blankets.
- The CE15H1 fuel assembly type does not contain hollow guide tubes. The assembly contains 8 rectangular guide bars on the assembly periphery (2 per side).

[a] Indicates assembly and/or nuclear steam supply system (NSSS) vendor/type referenced for fuel input data. Fuel acceptability for loading is not restricted to the indicated vendor provided that the fuel assembly meets the listed limits. Abbreviations are as follows: Westinghouse (W), Combustion Engineering (CE), Siemens Power Corporation (SPC), Babcock and Wilcox (BW), and Framatome Cogema Fuels (FCF).

6.A.3 Criticality Model Specification

6.A.3.1 Description of Calculation Model

MCNP is used to model the Concrete Cask and the Transfer Cask containing a full load of fuel assemblies. The Canister contains up to 21 PWR fuel assemblies. MCNP uses combinatorial geometry, with the option to divide the model into self-contained universes. The self-contained universe structure can be used to separate the Canister, Concrete Cask and fuel into individual components that can be easily modified and checked.

The basic MCNP geometry package is comprised of a set of general surfaces. To reduce the required user input, MCNP includes simplified expressions for cylinders and planes perpendicular to system axes and "macrobodies" (cubes, finite cylinders, wedges, etc.). Models are constructed by combining geometry components (surfaces) into cells. Cells may be embedded in individual universes to simplify modeling. A given universe may be included in different positions within the geometry by translation. Translation allows movement in the x, y and z directions and rotation using direction cosines.

Finite Cask/Canister/basket/fuel models (termed cask model henceforth) are constructed for the storage and transfer system. The cask models are constructed in a set of distinct phases. In the first phase, a fuel assembly is constructed from the basic components of the fuel assembly, i.e., fuel rod, guide tube, instrument tube and nozzles (end-fittings). Lattice elements are discretely modeled. Assembly material homogenization is limited to the end-fitting elevations where cuboids, containing a mixture of steel and Canister cavity material (either void or water at various densities), are included. Next, the basket structure is placed within the Canister cavity. The basket structure is comprised of a set of borated stainless steel tubes positioned by stainless steel support disks. Aluminum heat transfer disks are located between the stainless steel support disks. After completing the basket model, fuel assemblies are explicitly placed into the Canister cavity, with the basket structure superimposed on the cavity surrounding the assemblies using the universe structure. The Canister shell and closure lid are placed around the loaded basket. The complete Canister is then placed into either the Transfer Cask or the Concrete Cask.

Sample input files for the Storage Cask and Transfer Cask models are shown in Section 6.A.7.

6.A.3.1.1 Fuel Assembly

Fuel assemblies are built within MCNP using rectangular parallelepipeds (RPPs), right-circular cylinders (RCCs) and the lattice (array) feature. RPPs form the general assembly outline and end-fitting region. RCCs form the fuel rod and tube structure. The lattice structure simplifies the placement of fuel rods, instrument tubes and guide tubes. Fuel rods are modeled as a solid fuel stack, no chamfering or dishing, a pellet to clad and plenum gap, and clad with end-plugs. Guide tubes and instrument tubes connect the top and bottom end-fittings. For assemblies containing single lattice location instrument tubes and guide tubes, the tubes are individually modeled as universes, similar to fuel rods, and placed within the lattice. For CE assemblies containing oversize guide tubes, guide tubes and instrument tubes are inserted into the assembly model, composed of an end-fitting and a space for the rod lattice, with the fuel rod lattice filling in the remaining space. Nonfuel assembly inserts are modeled by replacing the interior material definition of the guide tubes by zirconium alloy. By using a zirconium-based alloy in the tubes, no credit is taken for any remaining absorber properties of the rods. Modeling the nonfuel insert in the guide tubes bounds a configuration with nonfuel material loaded into the instrument tube active fuel region, but not guide tubes, as assemblies contain a single instrument tube versus multiple guide tubes.

6.A.3.1.2 Basket

The basket is composed of a set of borated stainless steel tubes, support disks, heat transfer disks, and top and bottom weldments. Twenty-one PWR tubes form the openings for PWR assemblies.

Dimensioned fuel tubes forming the base configuration of the basket are shown in Figure 6.A.3-1. The tubes are composed of four interlocking borated stainless steel plates. In the MCNP model, each of the fuel tubes is composed of a set of RPPs. The borated stainless steel fuel tubes serve as the neutron absorbers.

The PWR structural disk determines the fuel assembly's radial location within the basket and is shown in Figure 6.A.3-1. Top and bottom weldment disks axially constrain the fuel tubes. Aluminum heat transfer disks are located between structural disks to serve as the primary radial heat transfer mechanism. An illustration of the resulting disk stack is included with the canister sketch. The basket design will not permit preferential flooding of the basket. All tubes are designed to drain simultaneously.

6.A.3.1.2 Canister

The Canister models are composed of a simple set of steel cylinders. Lid port covers are not included in the model as they are inconsequential to system reactivity. The lid lift fixture is also not included in the model description. Two Canister lengths are modeled. Figure 6.A.3-2 contains a sketch of the Canister model.

6.A.3.1.3 Storage Cask

A cross-section sketch of the Storage Cask is shown in Figure 6.A.3-3. An outer cylindrical MCNP macrobody allows reflecting boundary conditions to be applied at specified distances surrounding the cask model. Due to the size of the Storage Cask radiation shields, cask surface neutron currents are low. This, in turn, results in baskets that are neutronically isolated from cask exterior conditions and from other casks in an array configuration.

Differences in the criticality model normal and accident conditions are limited to flooding of the Canister to Storage Cask gap.

6.A.3.1.4 Transfer Cask

A cross-section sketch of the transfer cask is shown in Figure 6.A.3-4. An outer cylindrical MCNP macrobody allows reflecting boundary conditions to be applied at specified distances surrounding the cask model. The water gap between the fuel assembly and the canister shell and the cask neutron shield neutronically isolates the fissile material in the Canister from cask exterior conditions and from other casks in an array configuration. There is no accident condition that modifies the geometry of the transfer cask system.

6.A.3.2 Model Assumptions

Key assumptions for the analytical models are as follows.

- Assemblies are modeled as fresh, unburned fuel.
- The assembly is modeled at a fuel density of 96% theoretical ($0.96 \times 10.96 = 10.52$ g/cm^2).
- No fuel assembly structural materials (i.e., spacers or mixing grids) are included in the PWR active fuel region elevations. Nonfuel components placed into guide tubes are specifically addressed in the analysis. As demonstrated in the moderator density and fuel characteristics evaluation, the fuel rod lattices are undermoderated, thereby making this assumption conservative.

- Integral fuel assembly neutron absorbers (e.g., erbium or boron IFBAs) are excluded from the analysis, thereby substantially increasing assembly reactivity of the unburned assembly.
- Fuel assembly cladding for baseline cases is intact. In-core failure rates indicate that the vast majority of fuel loaded will not have cladding damage, allowing access to the pellet-to-clad gap. Flooding of this void space is addressed in Section 6.A.4.3.
- The moderator is assumed to be water at various densities. Baseline for the analysis is water at a nominal temperature of 293K, a density of 0.9982 g/cm^3 and soluble boron at various concentrations, effectively increasing water density. For a consistent presentation, water densities are expressed at the unborated levels throughout this document unless specifically noted. The fuel, cladding and other structural materials are assumed to be at 293K.
- Fixed borated stainless steel tubes contain a content of 1.1 to 1.2 wt % boron. Multiplying by 90% effectiveness yields the modeled and the minimum required absorber levels.
- Fuel assembly and basket will retain their structure and will not show any significant permanent deformation during normal conditions or off-normal or accident events.
- Regardless of the specific type of stainless or carbon steel employed in the system construction, the default SS-304 and carbon steel compositions in the SCALE 5.1 standard composition library are employed. Minor alloying differences between the steel types will not affect system reactivity significantly.

6.A.3.3 Cask Regional Densities

The densities used in the criticality analyses are primarily SCALE 5.1 default densities. NS-4-FR is a proprietary material and the listed information reflects values defined by the material information data sheet. Fuel assembly materials are listed in Table 6.A.3-1. Basket, Canister, Transfer and Storage Cask material densities and compositions are shown in Table 6.A.3-2.

Figure 6.A.3-1 UNITAD PWR Structural Disk Sketch and Tube

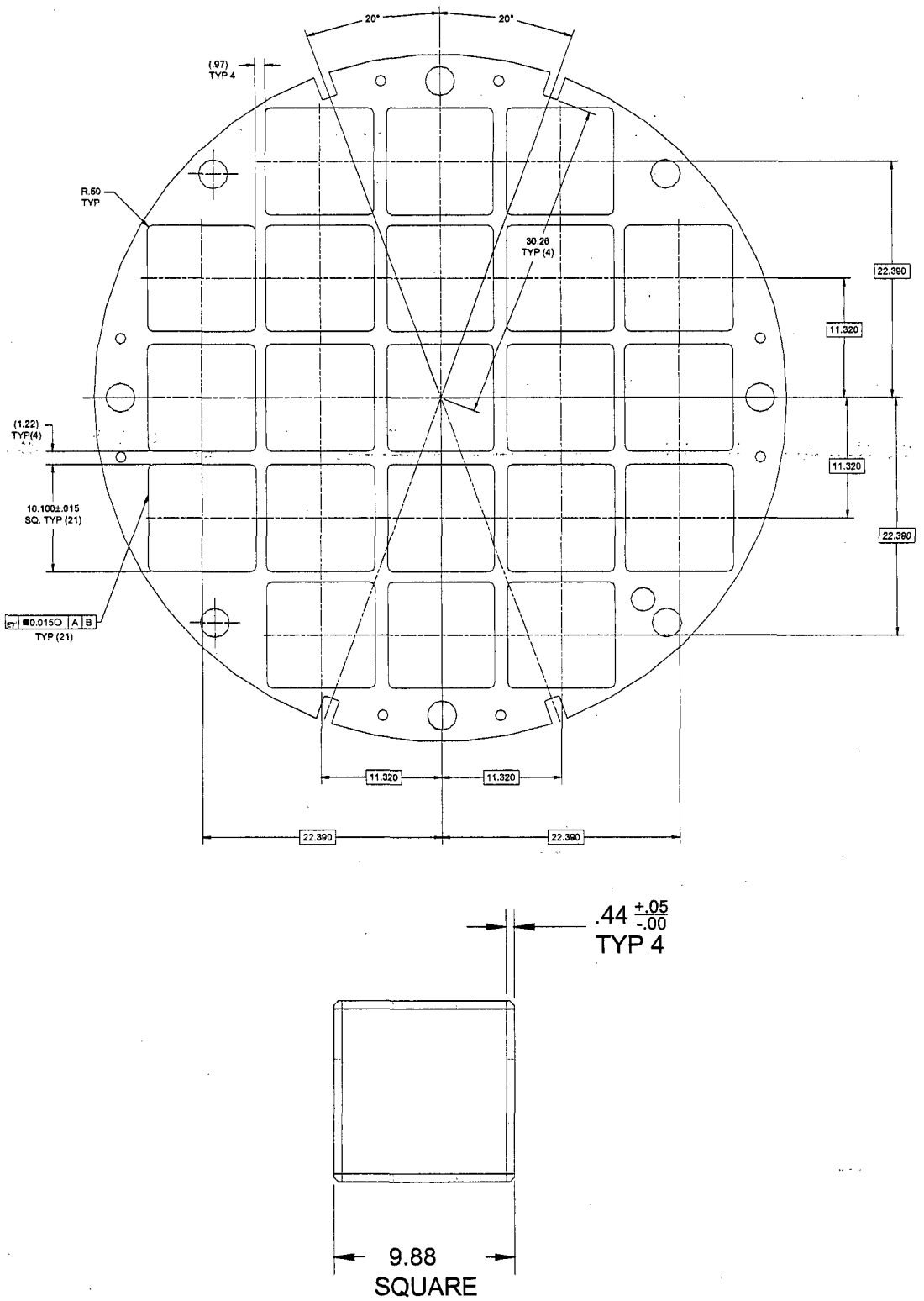

Figure 6.A.3-2 UNITAD Canister

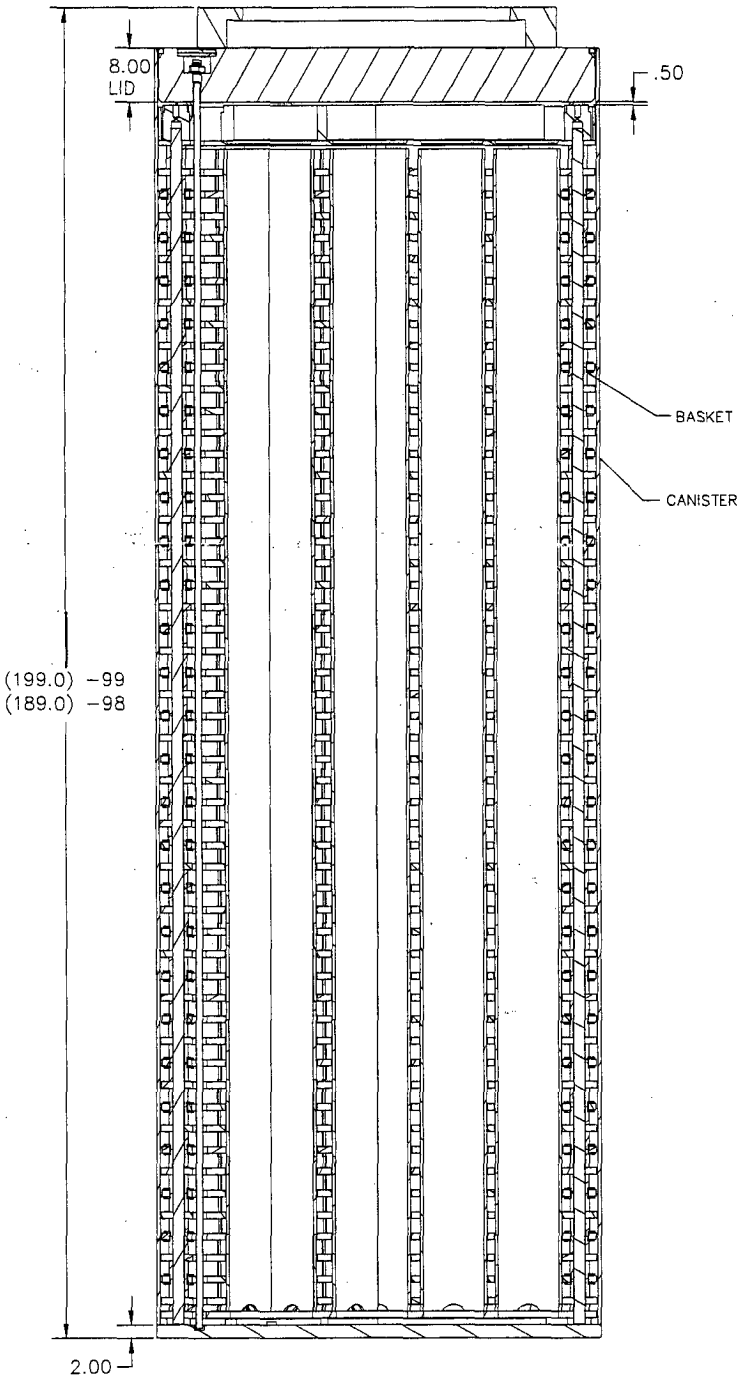

Note: Dimensions in inches

Figure 6.A.3-3 UNITAD Storage Cask Cross-Section Sketch

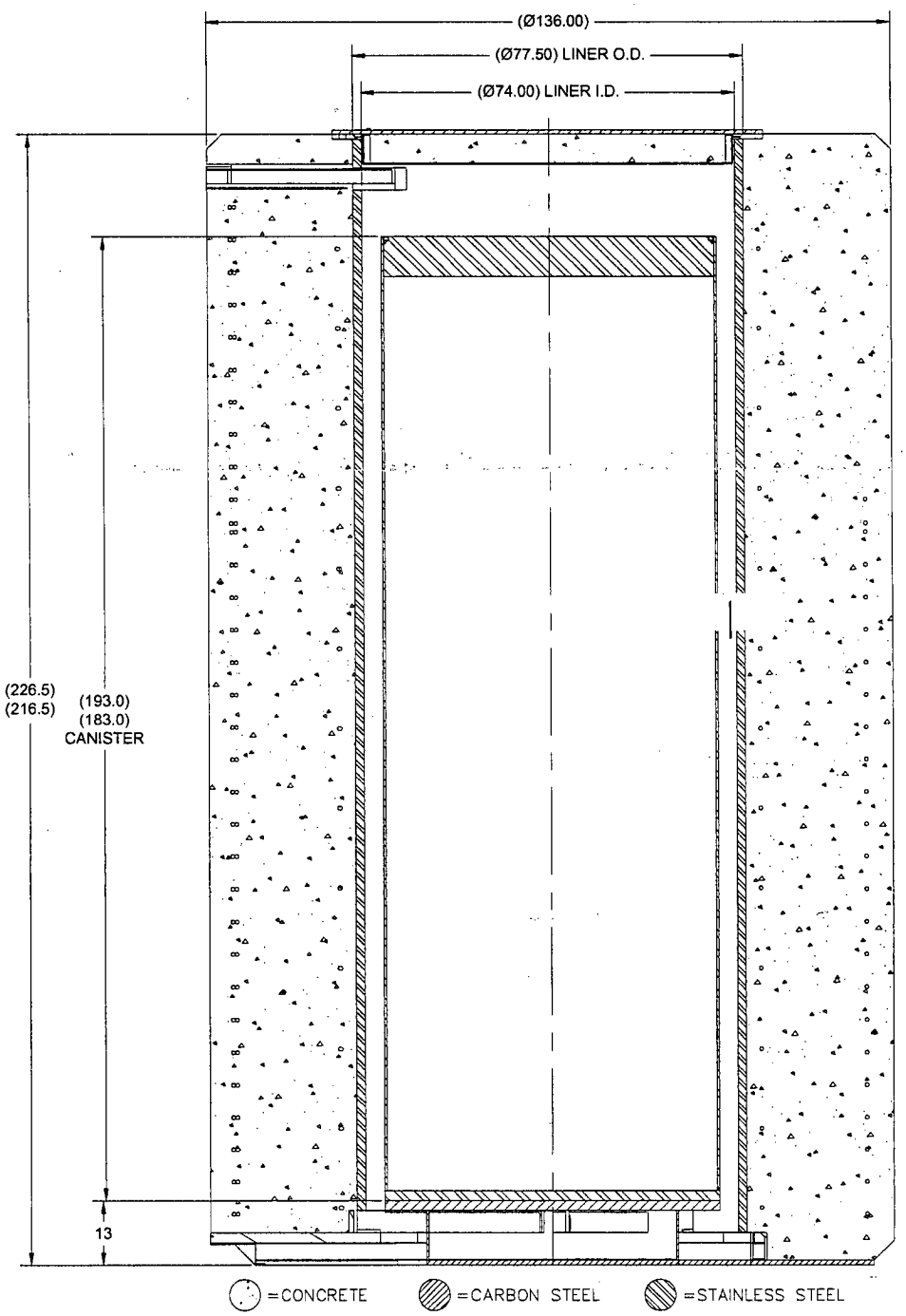

Note: Dimensions in inches

Figure 6.A.3-4 UNITAD Transfer Cask Cross-Section Sketch

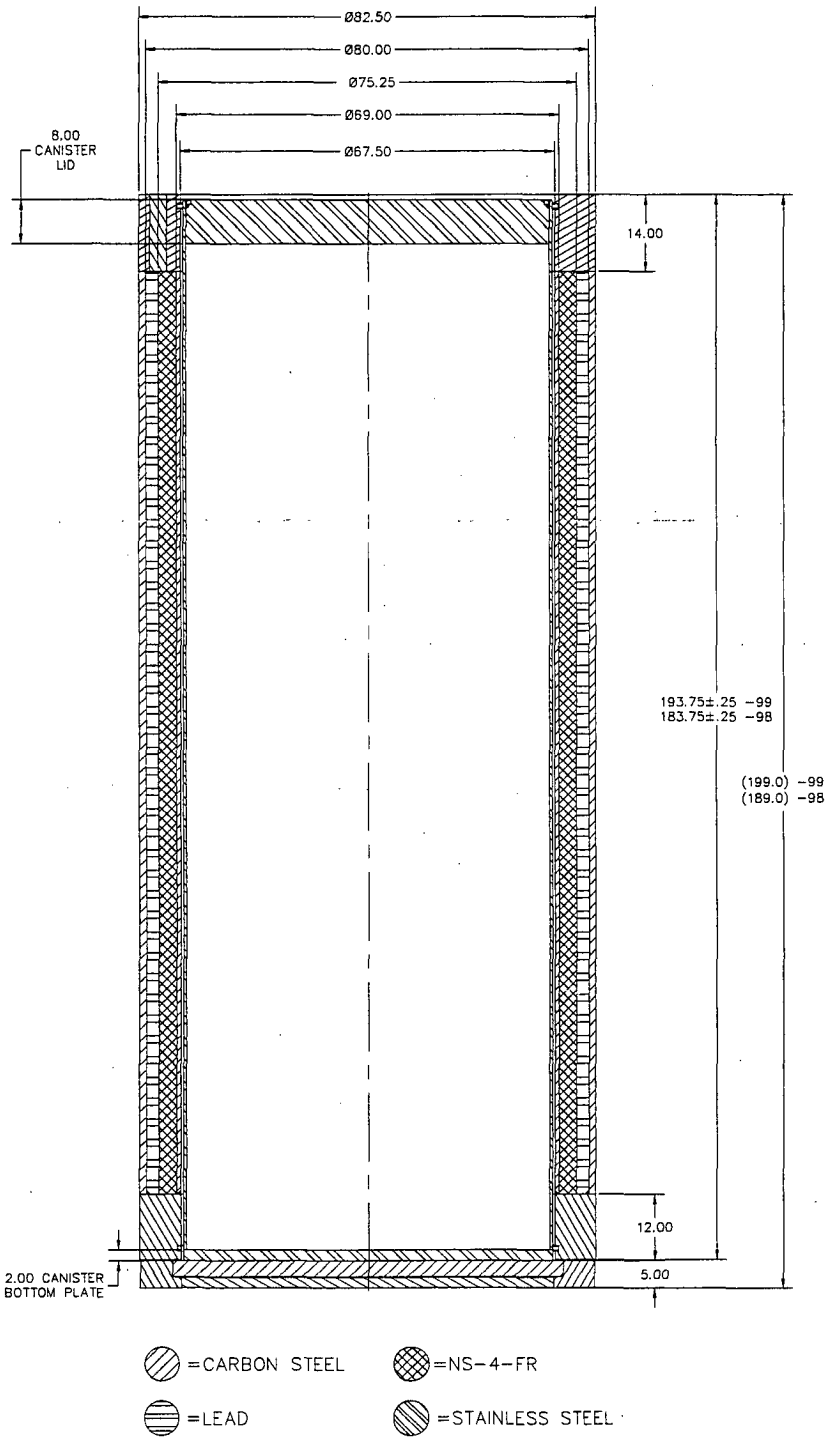

Note: Dimensions in inches

Table 6.A.3-1 PWR Fuel Assembly Materials

Material	Density g/cm^3	Element/ Isotope	Density atom/barn-cm
UO_2 (5 wt % ^{235}U)	10.522	^{235}U	1.19E-03
96% theoretical density		^{238}U	2.23E-02
		O	4.70E-02
Zirconium-based Alloy	6.56	Fe	8.84E-05
		Cr	7.60E-05
		N	1.41E-04
		Zr	4.25E-02
		Sn	4.99E-04
Water	0.9982	H	6.67E-02
Full Density		O	3.34E-02
Stainless Steel	7.94	Cr	1.75E-02
		Fe	5.95E-02
		Ni	7.74E-03
		Mn	1.74E-03

Table 6.A.3-2 Basket, Canister, Transfer and Storage Cask Material Densities and Compositions

Material	Density g/cm^3	Element/ Isotope	Density atom/barn-cm
Carbon Steel	7.821	Fe	8.35E-02
		C	3.92E-03
Stainless Steel	7.94	Cr	1.75E-02
		Fe	5.95E-02
		Ni	7.74E-03
		Mn	1.74E-03
Aluminum	2.702	Al	6.03E-02
Lead	11.344	Pb	3.30E-02
NS-4-FR	1.632	H	5.85E-02
		^{10}B	9.14E-05
		^{11}B	3.37E-04
		C	2.26E-02
		N	1.39E-03
		O	2.61E-02
		Al	7.80E-03
Concrete (145 lb/ft^3)	2.322	H	1.39E-02
		O	4.65E-02
		Na	1.76E-03
		Al	1.76E-03
		Si	1.67E-02
		Ca	1.54E-03
		Fe	3.51E-04
Borated Stainless Steel[a]	7.81	Cr	1.70E-02
		Fe	5.79E-02
		Ni	7.53E-03
		Mn	1.69E-02
		^{10}B	8.22E-04
		^{11}B	3.87E-02

[a] Represents minimum/nominal plate thickness configuration (plate dimension is specified as 0.44 -0.00 + 0.05 inch). As ^{10}B areal density (g/cm^2) is maintained at a constant value, material composition varies as a function of plate thickness.

6.A.4 Criticality Calculation

This section contains descriptions of the calculation used to determine the nuclear reactivity for the maximum fuel loading in a Transfer Cask and in a Storage Cask. Flooded canister studies are based on a minimum 700 ppm soluble boron in the canister cavity moderator.

6.A.4.1 Calculation Method

System reactivity evaluations are performed with the MCNP5 three-dimensional Monte Carlo code and continuous neutron energy cross-sections. The Monte Carlo code and neutron cross-section libraries are validated for use in fuel transport and storage cask applications through a series of calculations based on critical experiments. Validation detail is presented in Section 6.A.5.

The criticality analysis of the system is performed in several steps.

- Establish initial reactivities and evaluate the effect of inserts for each fuel type Determine bounding fuel assembly geometric definitions in terms of maximum or minimum rod pitch, rod diameter, clad thickness, and guide/instrument diameter and thickness.
- Evaluate basket mechanical perturbations and basket geometric tolerances for sample fuel assembly types.
- Construct optimum moderator density curve(s) to demonstrate maximum moderator density to be bounding for system reactivity analysis.
- Demonstrate that for all fuel types, a 5 wt % fuel is acceptable under the condition of canister flooding (e.g., potential unloading operations) provided a 700 ppm boron absorber content is maintained in the canister moderator.
- Demonstrate that for all fuel types a 5 wt % fuel is acceptable for loading into the Storage Cask system. System reactivity must be below the USL.

6.A.4.2 Fuel Loading Optimization

The fuel loading is optimized in the criticality models using the following.

- Fresh fuel at 96% theoretical density
- Bounding fuel assembly geometry
- The most-reactive cask configuration

Based on the fuel characteristics documented in Section 6.A.2, bounding fuel assembly nominal characteristics are established in terms of the following.

- Fuel rod outer diameter
- Fuel rod clad thickness
- Fuel rod pitch
- Guide tube outer diameter and thickness
- Presence of nonfuel hardware insert

The maximum reactivity Canister configuration considers basket fabrication tolerances, component shifting and moderator density evaluations. Cask body (overpack) tolerances do not affect system performance. Each of the basket effects is evaluated individually and in combination to ensure that the highest reactivity configuration is documented. Fabrication tolerances and shift effects are evaluated using representative fuel types from the major core configurations. Basket tolerances are evaluated in the flooded configuration (transfer condition) as the dry system reactivity is extremely low ($k_{eff} < 0.4$). For a fast neutron spectrum dry canister, minor distance and material thickness changes invoked by manufacturing tolerances will not result in significant reactivity changes.

The Storage Cask and Transfer Cask are evaluated at various exterior flood conditions with reflective boundary conditions. Reflective boundary conditions are applied to an independently generated cylindrical body surrounding the module body. This allows the modeling of infinite module arrays at various module spacings. Space between the cask surface and the reflecting body may be flooded at various moderator densities. Given the low neutron fluxes on the Storage and Transfer cask surfaces, no significant effect is observed from conditions outside the module body.

Fabrication Tolerances

The basket is composed of a set of borated stainless steel fuel tubes located in the Canister cavity with stainless steel support disks. Tube location in the basket is controlled by the opening location on the support disk and by the dimensions of the openings in the support disks as shown in Figure 6.A.3-1. Tube width and thickness also have the potential to affect the system reactivity. Tube wall thickness is evaluated at the drawing tolerance of -0.0, +0.05 inch. Tolerance effects are also evaluated for disk thickness and pitch.

Component Shift

In addition to the component tolerances, a reactivity study on component shifts is required. Based on the tube-and-disk arrangement, the radial shift to be evaluated is the shift of the fuel assembly within the tubes and the tubes in the disk openings (tube may shift and tube plates may shift with respect to one another, as the tube plates are not mechanically fastened to each other).

Moderator Density Study

Water density variations from void (0.0001 g/cm^3) to full density (0.9998 g/cm^3) are evaluated to demonstrate maximum reactivity is achieved by the fully flooded transfer system. Interior and exterior water densities are considered in the evaluation.

6.A.4.3 Criticality Results

Results of the fuel characterization evaluation in Section 6.A.4.3.1 indicate that maximum fuel reactivity is achieved by:

- Maximum pitch
- Maximum fuel pellet OD and active fuel length
- Minimum fuel rod OD and clad thickness

For the low reactivity dry configuration, maximum reactivity is directly related to fuel mass with other fuel parameters playing secondary roles. Insertion of nonfuel assembly hardware components into the active fuel regions only reduces system reactivity in the flooded canister cases across all fuel types.

Detailed studies in Section 6.A.4.3.1 demonstrate that in the flooded canister scenario, no component fabrication tolerance has a statistically significant effect on system reactivity. Dry evaluations on tolerance and shift were not performed, as system reactivity is low and none of the basket materials have a large fast neutron cross-section. For a flooded canister, a radial shift of assemblies toward the canister center and a shift of fuel tube plates to the disk opening periphery increase system reactivity significantly.

Flooding the Canister to Storage Cask gap has a minor effect on system reactivity due to differences in neutron reflection between the water in the gap and the concrete cask liner.

The allowable fuel loading is documented in Table 6.A.1-1 and represents the bounding values for assemblies with, and without, nonfuel hardware in the assembly guide tubes (or instrument tube for the Palisades 15×15 assembly).

Maximum reactivities for storage and transfer conditions for PWR fuel are listed in Table 6.A.4-8. The USL applied is 0.9376 for all conditions.

6.A.4.3.1 PWR Fuel Characterization

Fuel definitions listed in Section 6.A.2 are the result of grouping the large range of commercial fuel types by core type, number of fuel rods, and key criticality characteristics. These characteristics are primarily associated with the assembly moderator ratio and fuel mass and include pellet diameter, active fuel length, fuel rod diameter and clad thickness, and guide/instrument tube diameter and thickness.

PWR fuel assemblies are typically undermoderated (H/U ratio below optimum levels). Therefore, initial criticality analysis extracts the following characteristics from each assembly type.

- Minimum fuel rod outer diameter
- Minimum clad thickness (only relevant to flooded pellet-to-clad gap scenarios)
- Minimum guide tube outer diameter and thickness
- Maximum rod pitch (assemblies are grouped by core type and, therefore, typically have single nominal pitch)

Based on the maximum H/U set of characteristics, the reactivity of each assembly is determined under various conditions. Evaluated are a dry-pellet-to-clad gap condition, a flooded-pellet-to-gap condition (with and without soluble boron in the gap), and nonfuel hardware insertion into the guide tubes. Since relative reactivity for the assembly design and flood conditions is evaluated, the models are based on nominal basket characteristics with the assemblies centered in the tube. Comparisons are performed at a soluble boron level of 700 ppm and a 5 wt % enrichment. A ^{235}U enrichment of 5 wt % represents the upper boundary for licensing of the system. The 700 ppm soluble boron level is required to maintain reactivity control of the fresh fuel payload.

Results of the analysis at dry and wet clad-to-gap conditions are shown in Table 6.A.4-1 and demonstrate that system reactivity is closely tied to fuel mass. Reactivity differences associated

with improved moderator ratios (higher H/U ratio) are slightly offset by the soluble boron content in the moderator. Flooding the gap with 700 ppm borated water resulted in a reactivity increase.

As illustrated in Table 6.A.4-2, the effect of the insertion of nonfuel hardware into the active fuel elevation of the guide tube varied by fuel type. In all cases, reactivity decreased when placing the insert into the guide (or instrument) tube. As there is only one instrument tube in the CE15H1 assembly, the effect is small.

The evaluation presented previously assumed that the assemblies are undermoderated and that choosing the corresponding set of parameters maximizes system reactivity. This assumption is validated by evaluating a subset of the fuel assembly types for a variation in the lattice parameters. As typical assemblies loaded into the cask are expected to be intact (no leakage), the pellet-to-clad gap is specified to be dry for these analyses. Fuel assemblies are evaluated in a nominal configuration basket with fuel assemblies centered in the tube. As this evaluation is concerned with relative reactivity differences due to lattice parameter changes, the results of this analysis may be applied to the maximum reactivity basket configuration. Rather than evaluating individual parameter effects separately, the fuel characteristics analysis is divided into distinct regions.

- Fuel rod lattice unit cell
- H/U ratio controlled by rod pitch, rod diameter, and clad thickness
- Guide/instrument tube unit cell
- H/U controlled by guide tube diameter and thickness
- Pellet diameter (NUREG-6716 indicates the possibility of a minimum pellet diameter increasing system reactivity for a flooded pellet-to-clad gap)

Monte Carlo evaluation results of the nominal assembly parameter ranges provided limited useful information, as the majority of reactivity changes were not resolvable within a two or three sigma uncertainty band. Statistically significant results were obtained from an additional calculation set applying increased variances to each of the parameters. Refer to Table 6.A.4-3 for the result of the increased variance evaluation. As shown, the cases containing maximum H/U ratio in the fuel rod lattice location, maximum H/U in the guide/instrument tube location (minimum guide/instrument tube diameter and thickness), and maximum pellet diameter produce a maximum reactivity configuration system. The result set also demonstrates that guide tube dimensions are not crucial to system criticality control (note that the absence of guide/instrument tubes may increase reactivity statistics significantly). Therefore, the number of tubes should be

specified in the limiting payload description but not tube dimensions. Critical assembly characteristics are as follows.

- Number of fuel rods
- Minimum fuel rod outer diameter
- Minimum clad thickness
- Maximum rod pitch
- Maximum active fuel length (not evaluated but based on neutron leakage maximum active fuel length results in a bounding payload definition)
- Number of guide/instrument tubes

This base characteristics set is applied to the Transfer and Storage Cask configuration to determine relative fuel assembly reactivity at 5 wt % ^{235}U.

While not explicitly evaluated in a dry, fast spectrum, system reactivity is directly related to fissile material mass. The maximum mass assembly is the B&W 15×15 fuel type. Storage cask system reactivities are reported for the B&W fuel type.

6.A.4.3.2 Fabrication Tolerances and Component Shift

Fabrication tolerances and shift effects are evaluated using representative fuel types from the major core configurations (WE, CE and B&W cores). The wet, fully flooded Canister with dry cask exterior is used as the baseline model for this analysis. Nominal fuel assembly characteristics are employed in the tolerance and shifting evaluations.

Fabrication Tolerances

The basket is composed of a set of fuel tube plates, held in place by disks that, in turn, are held in place by a set of tie rods, spacers and washers. Tube location in the basket is controlled by the disk opening cut-out in the structural disk. Moderator space between fuel tubes is controlled by the fabrication tolerance by a number of items including fuel tube width and thickness, and disk opening location and size. The results of the tolerance evaluation for centered fuel assemblies and tubes are included in Table 6.A.4-4. As the fuel tube plates are not mechanically attached to one another, three plate configurations are evaluated: plates shifted "in" forming a solid tube, shifted "out" against the disk cut-out, and a "middle" location between the "in" and "out" extremes. For the "middle" and "out" configurations, plate width is reduced to account for potential shifting of the plate along the disk opening face. As indicated in the table, little

statistically significant information is available from the maximum reactivity, "plate out" configuration. Significant trends are shown for the lower reactivity "plate in" configuration. Further studies are included in combination with the most reactive shift configuration.

Component Shift

In addition to the component tolerances, a reactivity study on component shifts is required. Based on the tube-and-disk arrangement, the radial shifts evaluated are the movement of the fuel assembly within the tubes, and the tubes within the disk opening. For each of the shift scenarios, the three plate locations, "in", "middle" and "out", described in the previous section are evaluated. Note that radial shifting of the tube for the "out" configuration is a redundant configuration, as the tube model cannot be shifted once it is located against the disk opening on all sides. The results of the shift evaluation are shown in Table 6.A.4-5 and indicate that moving the fuel assembly in with tubes plates shifted out increases system reactivity.

Combined Shift and Tolerance Study

Calculations in the tolerance and shift analysis sections evaluated basket tolerances and shifts as separate effects. This section evaluates the effect of combining various basket tolerances with the maximum reactivity shift configuration. The results for these evaluations are shown in Table 6.A.4-6. Similar to the results of the independent basket tolerance evaluations, applying fabrication tolerances to the basket components provides no statistically significant change in system reactivity for the maximum reactivity "shifted out" plate configuration.

As the individual tolerances do not provide statistically significant information, combined tolerance models for the "plate in" and "plate out" location options are developed. The combined tolerance configuration is one that minimizes the amount of moderator and neutron absorber within the radial plane between disks (i.e., maximum tube plate width for the "shifted in" plate configuration, minimum tube plate width for the "shifted out" configuration, and maximum tube wall thickness at a minimum areal density). A disk thickness increase and decreased disk pitch increase the amount of parasitic absorber within the center (axial) fuel region while simultaneously decreasing water (borated or unborated) space between fuel tubes, thereby reducing absorber effectiveness. Structural disk thickness and pitch tolerances, therefore, create offsetting effects. A reduced flux trap, maximum disk thickness and minimum disk pitch configuration is chosen for this configuration. Results for these models are shown in Table 6.A.4-7 and confirm that the material tolerances do not result in a statistically significant reactivity change even when applied in the most conservative combination. Maximum system reactivities are, therefore, reported for the nominal dimension system with "shifted in" fuel and "shifted out" plate configuration.

The following geometry is applied to the moderator density study.

- Fuel assemblies shifted to basket center
- Tube walls shifted against the disk cut-out perimeter

6.A.4.3.3 Moderator Density Variations

Moderator density variation cases are based on a cask array model generated by surrounding a single cask body with a cylindrical reflecting enclosure. The reflecting body is spaced 20 cm from the cask body to allow exterior moderator density conditions to affect the results. As the transfer cask is the only configuration with a reactivity approaching the USL, it is used in the moderator density variation study. Exterior dry and wet cases are run for the Storage Cask to demonstrate limited reactivity changes. Results for the Storage Cask analysis are listed in Table 6.A.4-9.

To verify maximum reactivity for the borated water cases occurs at the highest mixture density in the canister cavity, a sequence of cavity water densities ranging from void (0.0001 g/cm^3) to full density (0.9998 g/cm^3) is evaluated with a void (0.0001 g/cm^3) exterior. Similar evaluations are performed with a void interior and various exterior water densities, and simultaneous variations in interior and exterior water densities. Exterior moderator is conservatively modeled as unborated water regardless of canister interior boron content. The moderator density variation studies are limited to one representative fuel assembly type (WE17H2) and the maximum reactivity shift (fuel in and plates out) configuration at nominal basket tolerances. At the maximum reactivity, tube plate "shifted out" configuration, basket tolerances do not affect system reactivity significantly. The results of these analyses are illustrated in Figure 6.A.4-1. Maximum reactivity occurs at full density borated water inside the canister cavity. There is no statistically significant reactivity trend due to variations of exterior water density. This analysis also demonstrates the low reactivity, k<0.4, for the dry basket system.

6.A.4.3.4 Allowable Loading Definitions and Maximum System Reactivities

Based on the most-reactive basket configuration, each of the fuel assembly types is evaluated at maximum 5 wt % ^{235}U to determine the maximum reactivity at which $k_{eff} + 2\sigma$ remains below the USL of 0.9376. All fuel geometry information is based on nominal, unirradiated dimensions. Maximum reactivity and fuel characteristics for each fuel type are documented in Table 6.A.4-8.

Additional runs for the maximum reactivity assembly are performed for the storage cask array under normal (dry exterior) and accident (wet exterior) conditions. Results of these evaluations, in addition to the maximum transfer cask reactivities, are shown in Table 6.A.4-9. Reactivities are presented for the BW15H4 hybrid. Flooding the storage cask annulus reduces neutron reflection from the carbon steel cask liner and decreases system reactivity.

A comparison of the maximum reactivity case parameters to the MCNP range of applicability is shown in Table 6.A.4-10. The table demonstrates that the MCNP code validation is applicable to the UNITAD System. Variables are provided for the maximum enrichment (flooded canister) transfer cask configuration case producing the highest system reactivity.

Figure 6.A.4-1 Moderator Density Variation Study (700 ppm Boron)

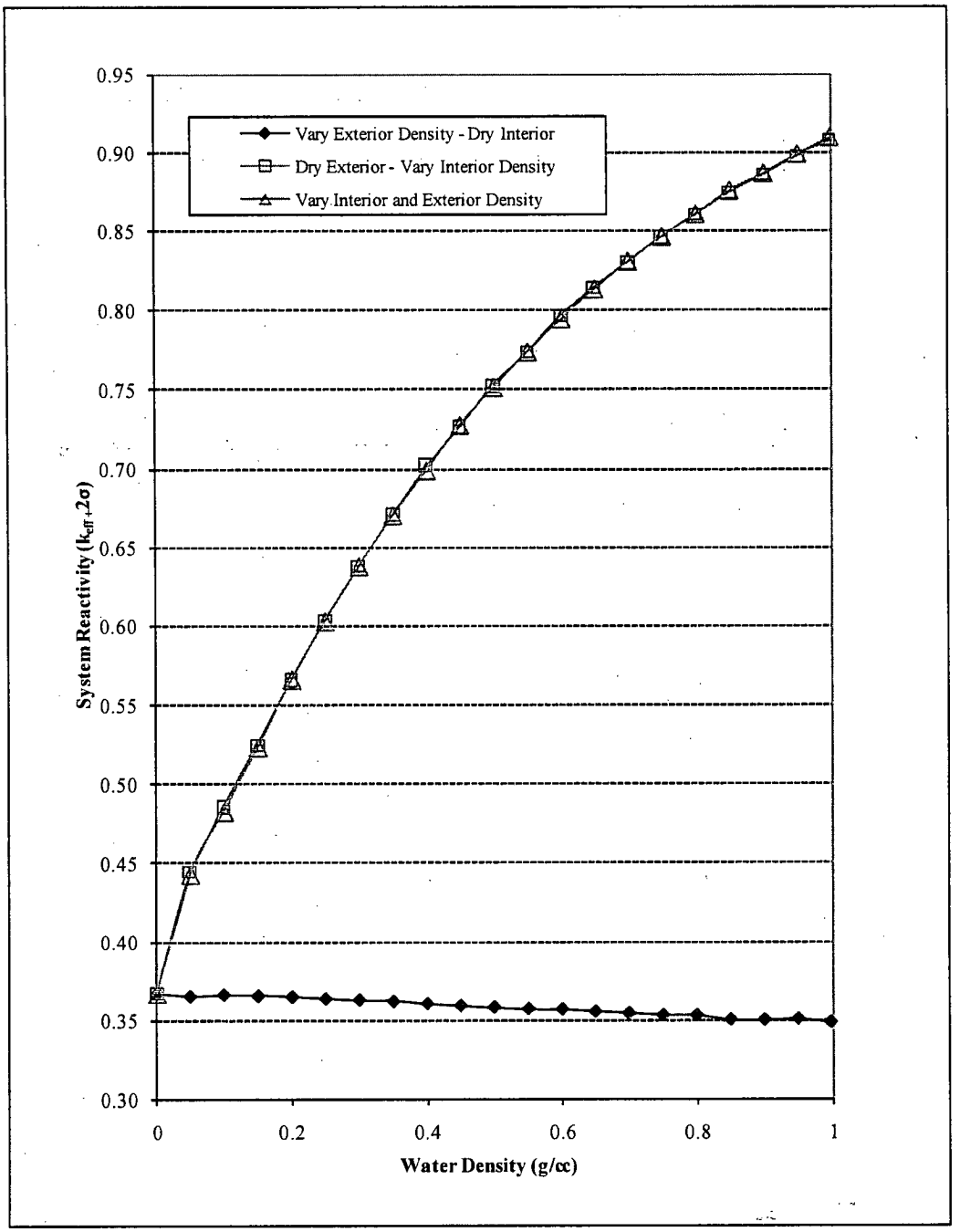

Table 6.A.4-1 System Reactivity Response to PWR Fuel Type and Pellet to Clad Condition

Assembly Type	700 ppm 5.0 wt % Dry Gap No Insert k_{eff}	700 ppm 5.0 wt % Dry Gap No Insert $\Delta k_{eff}/\sigma$	700 ppm 5.0 wt % Wet Gap No Insert k_{eff}	Dry Gap to Wet Gap $\Delta k_{eff}/\sigma$
CE14H1	0.85048	-39.8	0.85820	9.4
CE16H1	0.85234	-38.3	0.86015	9.8
CE15H1	0.85557	-35.2	0.86995	18.3
BW15H1	0.87945	-5.3	0.88894	11.8
BW15H2	0.88421	0.6	0.89185	9.6
BW15H3	0.88573	2.5	0.89404	10.2
BW15H4	0.88935	7.0	0.89699	9.6
BW17H1	0.88625	3.1	0.89557	11.8
WE14H1	0.86318	-25.0	0.86239	-0.9
WE15H1	0.88336	-0.4	0.88885	6.8
WE15H2	0.87836	-6.6	0.88419	7.2
WE17H1	0.88372	--	0.89093	8.9
WE17H2	0.88279	-1.2	0.88704	5.3

Table 6.A.4-2 System Reactivity Response to PWR Fuel Type and Nonfuel Insert

Assembly Type	700 ppm 5.0 wt % Wet Gap No Insert k_{eff}	700 ppm 5.0 wt % Wet Gap Insert k_{eff}	No Insert to Insert $\Delta k_{eff}/\sigma$
CE14H1	0.85820	0.83510	-28.9
CE16H1	0.86015	0.83964	-25.9
CE15H1	0.86995	0.86863	-1.6
BW15H1	0.88894	0.86886	-24.7
BW15H2	0.89185	0.87061	-26.3
BW15H3	0.89404	0.87524	-23.3
BW15H4	0.89699	0.87747	-24.2
BW17H1	0.89557	0.87396	-27.3
WE14H1	0.86239	0.84308	-23.3
WE15H1	0.88885	0.86599	-27.9
WE15H2	0.88419	0.86497	-24.1
WE17H1	0.89093	0.86125	-36.8
WE17H2	0.88704	0.86227	-31.0

Note: CE15H1 fuel contains no hollow guide tubes. Therefore, the hardware insert was modeled in the instrument tube.

Table 6.A.4-3 PWR Lattice Parameter Reactivity Study (Increased Variance)

	2	6	1	4	3	5	7	8
Fuel Pin Cell H/U	**Max**	**Min**	**Max**	**Max**	**Max**	**Min**	**Min**	**Min**
Pellet Dia.	**Max**	**Max**	**Max**	**Min**	**Min**	**Max**	**Min**	**Min**
GT/IT Thick & Dia.	**Min**	**Min**	**Max**	**Min**	**Max**	**Max**	**Max**	**Min**
CE14H1	0.85684	0.84419	0.85597	0.84769	0.84682	0.84312	0.83609	0.83655
CE16H1	0.86079	0.84367	0.86131	0.86031	0.85939	0.84414	0.84378	0.84348
BW15H4	0.89463	0.88295	0.89435	0.89385	0.89408	0.88330	0.88304	0.88376
BW17H1	0.89276	0.87662	0.89176	0.89210	0.88890	0.87441	0.87299	0.87470
WE14H1	0.86948	0.83578	0.86570	0.84825	0.84699	0.83276	0.81324	0.81672
WE15H1	0.88911	0.87456	0.88838	0.87870	0.87848	0.87424	0.86411	0.86505
WE17H1	0.89115	0.87484	0.88996	0.88860	0.88856	0.87276	0.87202	0.87441
		Case 2 to Case 6 $\Delta k_{eff}/\sigma$	**Case 2 to Case 1 $\Delta k_{eff}/\sigma$**	**Case 2 to Case 4 $\Delta k_{eff}/\sigma$**	**Case 2 to Case 3 $\Delta k_{eff}/\sigma$**	**Case 2 to Case 5 $\Delta k_{eff}/\sigma$**	**Case 2 to Case 7 $\Delta k_{eff}/\sigma$**	**Case 2 to Case 8 $\Delta k_{eff}/\sigma$**
CE14H1		-15.4	-1.1	-11.4	-12.4	-17.0	-25.1	-25.6
CE16H1		-21.0	0.6	-0.6	-1.7	-20.1	-20.9	-21.3
BW15H4		-14.7	-0.4	-1.0	-0.7	-14.3	-14.9	-14.0
BW17H1		-20.4	-1.3	-0.8	-4.8	-23.0	-25.0	-22.4
WE14H1		-41.4	-4.6	-26.3	-27.7	-44.8	-68.6	-65.4
WE15H1		-18.2	-0.9	-13.3	-12.8	-18.4	-31.6	-29.6
WE17H1		-20.1	-1.5	-3.1	-3.2	-22.2	-23.3	-20.4

Table 6.A.4-4 Component Tolerance Study – No Shift – WE17H2 Hybrid – 700 ppm Boron

Tube Tol.			Disk Tol.				Plate In		Plate Middle		Plate Out	
Width	Thickness	Cut-Out[1]	Op_Width	Location	Thickness	Spacing	k_{eff}	$\Delta k_{eff}/\sigma$	k_{eff}	$\Delta k_{eff}/\sigma$	k_{eff}	$\Delta k_{eff}/\sigma$
Nom	Nom	Nom	Nom	Nom	Nom	Nom	0.88704	--	0.89672	--	0.90546	--
Min	Nom	Nom	Nom	Nom	Nom	Nom	0.88655	-0.6	0.89619	-0.7	0.90522	-0.3
Max	Nom	Nom	Nom	Nom	Nom	Nom	0.89189	5.9	0.89892	2.8	0.90581	0.4
Nom	Min	Nom	Nom	Nom	Nom	Nom	0.88592	-1.4	0.89762	1.1	0.90623	1.0
Nom	Max	Nom	Nom	Nom	Nom	Nom	0.89267	7.0	0.89666	-0.1	0.90582	0.4
Nom	Nom	Min	Nom	Nom	Nom	Nom	0.89079	4.7	0.89680	0.1	0.90475	-0.9
Nom	Nom	Max	Nom	Nom	Nom	Nom	0.88615	-1.1	0.89798	1.6	0.90522	-0.3
Nom	Nom	Nom	Min	Nom	Nom	Nom	0.88920	2.7	0.89783	1.4	0.90372	-2.2
Nom	Nom	Nom	Max	Nom	Nom	Nom	0.88850	1.8	0.89698	0.3	0.90658	1.4
Nom	Nom	Nom	Nom	Min	Nom	Nom	0.88980	3.4	0.89849	2.2	0.90631	1.0
Nom	Nom	Nom	Nom	Max	Nom	Nom	0.88756	0.6	0.89615	-0.7	0.90445	-1.2
Nom	Nom	Nom	Nom	Nom	Min	Nom	0.88750	0.6	0.89607	-0.8	0.90476	-0.9
Nom	Nom	Nom	Nom	Nom	Max	Nom	0.88950	3.1	0.89888	2.7	0.90716	2.1
Nom	Nom	Nom	Nom	Nom	Nom	Min	0.88847	1.8	0.89688	0.2	0.90555	0.1
Nom	Nom	Nom	Nom	Nom	Nom	Max	0.88754	0.6	0.89783	1.4	0.90648	1.2

[1] Refers to the edge pattern that allows the tube plates to interlock and form the fuel tube.

Table 6.A.4-5 Component Shift Study – No Tolerance Applied – WE17H2 Hybrid at 5.0 wt % ^{235}U and 700 ppm Boron

Component Radial Shift		Plate In		Plate Middle		Plate Out	
Fuel	**Tube**	k_{eff}	$\Delta k_{eff}/\sigma$	k_{eff}	$\Delta k_{eff}/\sigma$	k_{eff}	$\Delta k_{eff}/\sigma$
Centered	Centered	0.88704	--	0.89672	--	0.90546	--
Centered	Top	0.88818	1.4	0.89821	1.9	0.90546	--
Centered	Bottom	0.88783	1.0	0.89616	-0.7	0.90546	--
Centered	Right	0.88861	1.9	0.89722	0.6	0.90546	--
Centered	Left	0.88956	3.1	0.89632	-0.5	0.90546	--
Centered	Corner	0.88830	1.6	0.89748	1.0	0.90546	--
Centered	In	0.89460	9.5	0.89914	3.0	0.90546	--
Centered	Out	0.88325	-4.9	0.89362	-3.8	0.90546	--
Top	Centered	0.88569	-1.7	0.89356	-3.9	0.89985	-6.9
Top	Top	0.88505	-2.5	0.89149	-6.6	0.89985	-6.9
Bottom	Centered	0.88670	-0.4	0.89146	-6.6	0.89897	-8.0
Bottom	Bottom	0.88651	-0.7	0.89282	-4.9	0.89897	-8.0
Right	Centered	0.88649	-0.7	0.89230	-5.6	0.89976	-7.0
Right	Right	0.88507	-2.4	0.89302	-4.7	0.89976	-7.0
Left	Centered	0.88509	-2.4	0.89235	-5.5	0.89944	-7.4
Left	Left	0.88509	-2.5	0.89212	-5.9	0.89944	-7.4
Corner	Centered	0.88215	-6.1	0.88777	-11.3	0.89421	-14.1
Corner	Corner	0.88168	-6.6	0.88894	-9.9	0.89421	-14.1
In	Centered	0.88918	2.7	0.89870	2.5	0.90865	3.9
In	In	0.89606	11.3	0.90205	6.5	0.90865	3.9
Out	Centered	0.87961	-9.4	0.88577	-13.7	0.88903	-20.4
Out	Out	0.87416	-15.8	0.88264	-17.8	0.88903	-20.4
Custom	Centered	0.88738	0.4	0.89581	-1.1	0.90419	-1.6

Table 6.A.4-6 Component Tolerance Study – Fuel Shifted In – Fuel Plates Out – 700 ppm Boron

Tube Tolerance			Disk Tolerance				WE17H2		BW15H4		CE16H1	
Width	Thickness	Cut-Out[1]	Op_Width	Location	Thickness	Spacing	k_{eff}	$\Delta k_{eff}/\sigma$	k_{eff}	$\Delta k_{eff}/\sigma$	k_{eff}	$\Delta k_{eff}/\sigma$
Nom	Nom	Nom	Nom	Nom	Nom	Nom	0.90865	--	0.91610	--	0.87508	--
Min	Nom	Nom	Nom	Nom	Nom	Nom	0.90696	-2.1	0.91760	1.9	0.87589	1.0
Max	Nom	Nom	Nom	Nom	Nom	Nom	0.90646	-2.8	0.91715	1.3	0.87532	0.3
Nom	Min	Nom	Nom	Nom	Nom	Nom	0.90831	-0.4	0.91771	2.1	0.87623	1.4
Nom	Max	Nom	Nom	Nom	Nom	Nom	0.90763	-1.3	0.91510	-1.3	0.87575	0.8
Nom	Nom	Min	Nom	Nom	Nom	Nom	0.90747	-1.5	0.91754	1.8	0.87625	1.4
Nom	Nom	Max	Nom	Nom	Nom	Nom	0.90842	-0.3	0.91744	1.7	0.87524	0.2
Nom	Nom	Nom	Min	Nom	Nom	Nom	0.90534	-4.1	0.91559	-0.6	0.87416	-1.1
Nom	Nom	Nom	Max	Nom	Nom	Nom	0.90771	-1.2	0.91820	2.6	0.87638	1.6
Nom	Nom	Nom	Nom	Min	Nom	Nom	0.90888	0.3	0.91845	3.0	0.87505	0.0
Nom	Nom	Nom	Nom	Max	Nom	Nom	0.90709	-1.9	0.91709	1.2	0.87425	-1.0
Nom	Nom	Nom	Nom	Nom	Min	Nom	0.90641	-2.9	0.91599	-0.1	0.87548	0.5
Nom	Nom	Nom	Nom	Nom	Max	Nom	0.90872	0.1	0.91844	2.9	0.87720	2.6
Nom	Nom	Nom	Nom	Nom	Nom	Min	0.90750	-1.4	0.91705	1.2	0.87624	1.4
Nom	Nom	Nom	Nom	Nom	Nom	Max	0.90754	-1.4	0.91638	0.4	0.87521	0.2

[1] Refers to the edge pattern that allows the tube plates to interlock and form the fuel tube.

Table 6.A.4-7 Component Tolerance Study – Fuel Shifted In (700 ppm Boron)

Tube Tolerance			Disk Tolerance				Plate	WE17H2		BW15H4		CE16H1	
Width	**Thickness**	**Cut-Out[1]**	**Op Width**	**Location**	**Thickness**	**Spacing**	**Loc.**	k_{eff}	$\Delta k_{eff}/\sigma$	k_{eff}	$\Delta k_{eff}/\sigma$	k_{eff}	$\Delta k_{eff}/\sigma$
Nom	Nom	Nom	Nom	Nom	Nom	Nom	In	0.89606	--	0.90540	--	0.86518	--
Max	Min	Min	Max	Min	Max	Min	In	0.89745	1.8	0.90726	2.3	0.86783	3.3
Nom	Nom	Nom	Nom	Nom	Nom	Nom	Out	0.90865	--	0.91610	--	0.87508	--
Min	Max	Max	Max	Min	Max	Min	Out	0.90930	0.8	0.91730	1.5	0.87723	2.6

[1] Refers to the edge pattern that allows the tube plates to interlock and form the fuel tube.

Table 6.A.4-8 Maximum Reactivity Configuration and Moderation Reactivity Summary for Fuel Hybrids (Including Fuel Geometry)

Assembly Type	700 ppm – 5 wt % ^{235}U $k_{eff} + 2\sigma$	Pitch (inch)	Clad OD (inch)	Clad Thick. (inch)	Pellet OD (inch)	Active Fuel Length (inch)	Fuel Mass (MTU)	$H/^{235}U$ Ratio
CE14H1	0.87318	0.5800	0.4400	0.0260	0.3805	137.0	0.4167	91
CE15H1	0.88875	0.5500	0.4150	0.0225	0.3600	132.6	0.4385	92
CE16H1	0.87673	0.5063	0.3820	0.0250	0.3250	150.0	0.4463	96
BW15H1	0.90898	0.5680	0.4300	0.0265	0.3686	144.0	0.4858	93
BW15H2	0.91316	0.5680	0.4300	0.0250	0.3735	144.0	0.4988	91
BW15H3	0.91651	0.5680	0.4280	0.0230	0.3742	144.0	0.5006	91
BW15H4	0.91869	0.5680	0.4140	0.0220	0.3622	144.0	0.4690	102
BW17H1	0.91664	0.5020	0.3770	0.0220	0.3252	144.0	0.4799	95
WE14H1	0.87509	0.5560	0.4000	0.0162	0.3674	145.2	0.4188	97
WE15H1	0.90786	0.5630	0.4220	0.0242	0.3669	144.0	0.4720	94
WE15H2	0.90463	0.5630	0.4170	0.0265	0.3570	144.0	0.4469	101
WE17H1	0.91238	0.4960	0.3720	0.0205	0.3232	144.0	0.4740	94
WE17H2	0.90895	0.4960	0.3600	0.0225	0.3088	144.0	0.4327	108

Table 6.A.4-9 Maximum Transfer and Storage System Reactivity Summary

Cask Model	Water Density (g/cc)		k_{eff}	σ	$k_{eff}+2\sigma$
	Lattice	Exterior			
Transfer	0.9982	0.0001	0.91610	0.00056	0.91869
Transfer	0.0001	0.0001	0.38420	0.00040	0.38500
Transfer	0.0001	09982	0.36621	0.00041	0.36703
Storage	0.0001	0.0001	0.37246	0.00041	0.37326
Storage	0.0001	0.9982	0.34739	0.00041	0.34819

Table 6.A.4-10 UNITAD Comparison to Code Range of Applicability

Parameter	Minimum	Maximum	TAD
Enrichment (wt% ^{235}U)	2.350%	4.738%	5.0%
Fuel rod pitch (cm)	1.30	2.54	1.44
Fuel pellet outer diameter (cm)	0.790	1.265	0.920
Fuel rod diameter (cm)	0.9400	1.4172	1.052
$H/^{235}U$ atom ratio	72.7	403.9	102
Soluble boron (ppm by weight)	0	4986	700
Cluster Gap (cm)	1.206	13.750	2.54
Boron (^{10}B) plate loading (g/cm^2)	0.0000	0.0670	0.017
Energy of average neutron lethargy causing fission (eV)	0.09781	0.77219	0.338

Notes:

1. Enrichment is slightly above the evaluated range. There is no significant trend of USL versus enrichment. The USL for the lower enrichment may, therefore, be applied to the 5 wt % ^{235}U material.
2. UNITAD values are for the maximum reactivity BW15H4 hybrid fuel type.

THIS PAGE INTENTIONALLY LEFT BLANK

6.A.5 Critical Benchmark Experiments

Criticality code validation is performed for the MCNP5 Monte Carlo evaluation code and neutron cross-section libraries. Criticality validation is required by the criticality safety standards ANSI/ANS-8.1.

6.A.5.1 Benchmark Experiments and Applicability

NUREG/CR-6361, "Criticality Benchmark Guide for Light-Water-Reactor Fuel in Transportation and Storage Packages" (NUREG), provides a guide to LWR criticality benchmark calculations and the determination of bias and subcritical limits in critical safety evaluations. In Section 2 of the NUREG, a series of LWR critical experiments is described in sufficient detail for independent modeling. In Section 3, the critical experiments are modeled and the results (k_{eff} values) are presented. The method utilized in the NUREG is KENO-Va with the 44-group ENDF/B-V cross-section library embedded in SCALE 4.3. In Section 4, a guide for the determination of bias and subcritical safety limits is provided based on ANSI/ANS-8.17 and statistical analysis of the trending in the bias. Finally, guidelines for experiment selection and applicability are presented in Section 5. The approach outlined in Section 4 of the NUREG is described in detail herein and is implemented for MCNP5 with continuous energy ENDF/B-VI cross-sections.

The NUREG/CR-6361 implements ANSI/ANS-8.17 criticality safety criterion as follows.

$$k_s \leq k_c - \Delta k_s - \Delta k_c - \Delta k_m \qquad \text{(Equation 1)}$$

where:

k_s = calculated allowable maximum multiplication factor, k_{eff}, of the system being evaluated for all normal or credible abnormal conditions or events.

k_c = mean k_{eff} that results from a calculation of benchmark criticality experiments using a particular calculation method. If the calculated k_{eff} values for the criticality experiments exhibit a trend with an independent parameter, then k_c shall be determined by extrapolation based on best fit to calculated values. Criticality experiments used as benchmarks in computing k_c should have physical compositions, configurations and nuclear characteristics (including reflectors) similar to those of the system being evaluated.

Δk_s = allowance for the following.

- statistical or convergence uncertainties, or both, in computation of k_s
- material and fabrication tolerances
- geometric or material representations used in computational method

Δk_c = margin for uncertainty in k_c, which includes allowance for the following.

- uncertainties in critical experiments
- statistical or convergence uncertainties, or both, in computation of k_c
- uncertainties resulting from extrapolation of k_c outside range of experimental data
- uncertainties resulting from limitations in geometrical or material representations used in the computational method

Δk_m = arbitrary administrative margin to ensure subcriticality of k_s

The various uncertainties are combined statistically if they are independent. Correlated uncertainties are combined by addition.

Equation 1 can be rewritten as shown:

$$k_s \leq 1 - \Delta k_m - \Delta k_s - (1 - k_c) - \Delta k_c \qquad \text{(Equation 2)}$$

Noting that the definition of the bias is $\beta = 1 - k_c$, Equation 2 can be written as shown:

$$k_s + \Delta k_s \leq 1 - \Delta k_m - \beta - \Delta\beta \qquad \text{(Equation 3)}$$

where:

$$\Delta\beta = \Delta k_c$$

Thus, the maximum allowable value for k_{eff} plus uncertainties in the system being analyzed must be below 1 minus an administrative margin (typically 0.05), which includes the bias and the uncertainty in the bias. This can also be written as shown.

$$k_s + \Delta k_s \leq \text{Upper Subcritical Limit (USL)} \qquad \text{(Equation 4)}$$

where:

$$\text{USL} \equiv 1 - \Delta k_m - \beta - \Delta\beta \qquad \text{(Equation 5)}$$

This is the USL criterion as described in Section 4 of NUREG/CR-6361. Two methods are prescribed for the statistical determination of the USL. The "Confidence Band with Administrative Margin (USL-1)" approach is implemented here and is referred to generically as USL. A $\Delta k_m = 0.05$ and a lower confidence band are specified based on a linear regression of

k_{eff} as a function of some system parameter. As recommended in NUREG/CR-6361, a simple linear regression is performed on each system parameter, and the line with the greatest correlation is used to functionalize β.

Section 6.A.5.3 contains the extensive list of LWR critical benchmarks employed in the validation of MCNP with its continuous energy neutron cross-section libraries. The range of parameters included in the benchmarks is shown in Table 6.A.5-1.

Included in Section 6.A.5.2 are linear fits of reactivity (k_{eff}) to each of the system parameters. Experiments were chosen to reflect the fuel and basket geometry and materials, and the spent fuel cask criticality control mechanism. This includes the use of square pitched, low enriched uranium oxide fuel rods, a rectangular arrangement of assemblies, light water moderation, and criticality control by spacing, borated moderator, and/or borated tubes. Trending in k_{eff} was evaluated for the following independent variables: wt % ^{235}U, rod pitch, pellet diameter, rod diameter, H/U volume ratio, energy of the average neutron lethargy causing fission (EALCF), ^{10}B loading of the absorber plate, soluble boron loading, and cluster (assembly) gap. No statistically significant trends were found for any of the system parameters. USLs are, therefore, generated for each of the independent variables. A minimum USL covering the range of applicability of the benchmark set is determined as detailed in Section 6.A.5.2.

6.A.5.2 Results of Benchmark Calculations

To evaluate the relative importance of the trend analysis to the upper subcritical limits, correlation coefficients are required for all independent parameters. The linear correlation coefficient, R, is calculated by taking the square root of the R^2 value. In particular, the correlation coefficient, R, is a measure of the linear relationship between k_{eff} and a critical experiment parameter. If R is +1, a perfect linear relationship with a positive slope is indicated; if R is -1, a perfect linear relationship with a negative slope is indicated. When R is 0, no linear relationship is indicated.

Table 6.A.5-2 contains the correlation coefficient, R, for each linear fit of k_{eff} versus experimental parameter. Linear fits and correlation constants are based on the 183 data-point evaluation sets plotted in Section 6.A.5.3. The cluster gap plot is limited to the 137 data points for experiments containing multiple fuel rod clusters. Single fuel rod cluster experiments documented in LEU-COMP-THERM sets 06, 14, 35 and 50, in addition to LEU-COMP-THERM experiments 01-01, 02-01 to -03, and 08-01 to -15, were, therefore, excluded from the

cluster gap study. The 183 data points evaluated for the remaining parameters represent the complete set of experiments listed in Section 6.A.5.3 minus the three high-energy lethargy experiments above 0.35 eV (experiments LEU-COMP-THERM 14-05, -06 and -07). Addition of these points, while not resulting in a significant linear fit, produces a noticeable slope to the USL correlation not representative of the remaining data fits. As this increased slope results in a higher USL, it is acceptable to discard these data points. The three higher energy points are removed from all independent variables for consistency.

As there is no significant correlation to any of the independent variables, the USL for each independent variable is calculated and shown with its range of applicability in Table 6.A.5-2. A sample output for EALCF is shown in Figure 6.A.5-1. Uncertainties included in the USLSTATS evaluation are the Monte Carlo uncertainty associated with the reactivity calculation and experimental uncertainty that was provided in the literature for each of the cases.

Based on all the independent variable correlations, a lower limit constant USL of 0.9376 may be applied. The range of applicability (area of applicability) of this limit may be extended to 5 wt % enriched fuel, as the correlation shows no significant trend with enrichment between 2.35 and 4.74 wt %, and that the limited trending observed increases the USL. Extending the range of applicability for the average neutron lethargy is based on a minimal, but positive, trend of the USL versus EALCF. Studies, including additional data points up to 0.7722 eV, indicate that the trending continues to the higher energy levels.

Figure 6.A.5-1 USLSTATS Output for EALCF

```
*****************************************************************************
                        Version 1.4, April 23, 2003
                       Oak Ridge National Laboratory
*****************************************************************************
   Input to statistical treatment from file:enrich-183.in
Title: keff vs enrichment
   Proportion of the population = .995
   Confidence of fit            = .950
   Confidence on proportion     = .950
   Number of observations       =  183
   Minimum value of closed band =    0.00
   Maximum value of closed band =    0.00
   Administrative margin        =    0.05
```

independent variable - x	dependent variable - y	deviation in y	independent variable - x	dependent variable - y	deviation in y
2.35000E+00	9.94910E-01	3.42000E-03	2.35000E+00	9.95090E-01	3.46000E-03
2.35000E+00	9.92830E-01	3.38000E-03	2.35000E+00	9.92520E-01	3.47000E-03
2.35000E+00	9.98060E-01	3.38000E-03	2.35000E+00	9.95620E-01	3.50000E-03
2.35000E+00	9.96550E-01	3.42000E-03	2.35000E+00	9.93130E-01	3.55000E-03
2.35000E+00	9.89310E-01	3.44000E-03	2.35000E+00	9.98130E-01	3.58000E-03
2.35000E+00	9.95340E-01	3.41000E-03	2.35000E+00	9.96700E-01	3.56000E-03
2.35000E+00	9.93880E-01	3.44000E-03	2.35000E+00	9.93830E-01	3.55000E-03
2.35000E+00	9.89690E-01	3.36000E-03	2.35000E+00	9.92770E-01	3.47000E-03
4.30600E+00	9.95160E-01	2.79000E-03	2.35000E+00	9.92920E-01	3.50000E-03
4.30600E+00	9.93670E-01	2.54000E-03	2.35000E+00	9.96410E-01	3.46000E-03
4.30600E+00	9.96340E-01	2.76000E-03	2.35000E+00	9.93060E-01	3.49000E-03
4.30600E+00	9.93110E-01	2.64000E-03	2.35000E+00	9.96500E-01	3.45000E-03
4.30600E+00	9.93000E-01	2.49000E-03	2.35000E+00	9.94680E-01	3.50000E-03
2.59600E+00	9.92680E-01	2.10000E-03	2.35000E+00	9.93300E-01	3.47000E-03
2.59600E+00	9.93190E-01	2.14000E-03	2.35000E+00	9.91810E-01	3.46000E-03
2.59600E+00	9.92990E-01	2.13000E-03	2.35000E+00	9.93920E-01	3.47000E-03
2.59600E+00	9.94790E-01	2.13000E-03	2.35000E+00	9.95560E-01	3.55000E-03
2.59600E+00	9.93100E-01	2.12000E-03	2.35000E+00	9.94540E-01	3.51000E-03
2.59600E+00	9.93240E-01	2.12000E-03	2.35000E+00	9.94490E-01	3.47000E-03
2.59600E+00	9.91990E-01	2.12000E-03	2.35000E+00	9.91300E-01	3.52000E-03
2.59600E+00	9.93820E-01	2.12000E-03	2.35000E+00	9.94800E-01	3.47000E-03
2.59600E+00	9.94450E-01	2.12000E-03	2.35000E+00	9.93500E-01	3.60000E-03
2.59600E+00	9.95440E-01	2.13000E-03	2.35000E+00	9.94000E-01	3.45000E-03
2.59600E+00	9.94410E-01	2.12000E-03	2.35000E+00	9.96280E-01	3.53000E-03
2.59600E+00	9.93920E-01	2.15000E-03	2.35000E+00	9.92620E-01	3.45000E-03
2.59600E+00	9.95090E-01	2.14000E-03	2.35000E+00	9.94100E-01	3.53000E-03
2.59600E+00	9.93780E-01	2.12000E-03	2.35000E+00	9.96470E-01	3.52000E-03
2.59600E+00	9.95040E-01	2.14000E-03	2.35000E+00	9.93600E-01	3.47000E-03
2.59600E+00	9.94380E-01	2.11000E-03	2.35000E+00	9.97020E-01	3.49000E-03
2.59600E+00	9.95730E-01	2.12000E-03	2.35000E+00	9.94970E-01	3.50000E-03
2.59600E+00	9.94270E-01	2.14000E-03	2.35000E+00	9.91950E-01	3.55000E-03
2.45900E+00	9.98350E-01	1.34000E-03	2.59600E+00	9.93410E-01	1.93000E-03
2.45900E+00	9.96860E-01	1.36000E-03	2.59600E+00	9.91310E-01	2.05000E-03
2.45900E+00	9.99310E-01	1.24000E-03	4.73800E+00	9.95860E-01	4.36000E-03
2.45900E+00	9.97950E-01	1.36000E-03	4.73800E+00	9.93580E-01	4.53000E-03
2.45900E+00	9.97650E-01	1.38000E-03	4.73800E+00	9.95390E-01	4.58000E-03
2.45900E+00	9.96990E-01	1.35000E-03	4.73800E+00	9.92370E-01	4.54000E-03
2.45900E+00	9.97230E-01	1.37000E-03	4.73800E+00	9.91440E-01	4.62000E-03
2.45900E+00	9.96590E-01	1.40000E-03	4.73800E+00	9.98780E-01	4.82000E-03
2.45900E+00	9.95260E-01	1.40000E-03	4.73800E+00	9.94180E-01	4.94000E-03
2.45900E+00	9.97450E-01	1.36000E-03	4.73800E+00	9.92400E-01	4.90000E-03
2.45900E+00	9.97590E-01	1.38000E-03	4.73800E+00	9.96930E-01	4.98000E-03
2.45900E+00	9.97650E-01	1.36000E-03	4.73800E+00	9.91370E-01	5.05000E-03
2.45900E+00	9.98880E-01	1.39000E-03	2.35000E+00	9.92500E-01	2.34000E-03
2.45900E+00	9.97350E-01	1.37000E-03	2.35000E+00	9.95140E-01	2.43000E-03

Figure 6.A.5-1 USLSTATS Output for EALCF

2.45900E+00	9.97580E-01	1.39000E-03	2.35000E+00	9.92190E-01	2.33000E-03
2.45900E+00	9.97720E-01	1.39000E-03	2.35000E+00	9.94760E-01	2.40000E-03
2.45900E+00	9.96910E-01	1.35000E-03	2.35000E+00	9.94690E-01	3.67000E-03
4.30600E+00	9.95480E-01	2.84000E-03	2.35000E+00	9.94340E-01	2.49000E-03
4.30600E+00	9.93430E-01	2.78000E-03	2.35000E+00	9.93190E-01	2.39000E-03
4.30600E+00	9.93300E-01	2.81000E-03	4.73800E+00	9.93300E-01	1.28000E-03
4.30600E+00	9.93710E-01	2.85000E-03	4.73800E+00	9.93400E-01	1.23000E-03
4.30600E+00	9.95930E-01	2.73000E-03	4.73800E+00	9.94890E-01	1.25000E-03
4.30600E+00	9.92950E-01	2.85000E-03	4.73800E+00	9.93190E-01	1.25000E-03
4.30600E+00	9.96160E-01	2.89000E-03	4.73800E+00	9.93060E-01	1.28000E-03
4.30600E+00	9.93890E-01	2.73000E-03	2.45900E+00	9.91330E-01	2.03000E-03
4.30600E+00	9.95710E-01	2.96000E-03	2.45900E+00	9.95970E-01	2.43000E-03
4.30600E+00	9.93190E-01	2.60000E-03	2.45900E+00	9.95550E-01	2.42000E-03
4.30600E+00	9.93780E-01	2.75000E-03	2.45900E+00	9.94860E-01	2.42000E-03
4.30600E+00	9.92630E-01	2.84000E-03	2.45900E+00	9.95040E-01	2.42000E-03
4.30600E+00	9.95660E-01	2.75000E-03	2.45900E+00	9.95420E-01	2.42000E-03
4.30600E+00	9.94310E-01	2.82000E-03	2.45900E+00	9.95300E-01	2.42000E-03
4.30600E+00	9.96390E-01	2.95000E-03	2.45900E+00	9.95070E-01	2.42000E-03
4.30600E+00	9.96860E-01	2.79000E-03	2.45900E+00	9.93680E-01	1.93000E-03
4.30600E+00	9.97160E-01	2.68000E-03	2.45900E+00	9.92100E-01	1.93000E-03
4.30600E+00	9.92370E-01	2.86000E-03	2.45900E+00	9.94470E-01	1.93000E-03
4.30600E+00	9.97190E-01	2.81000E-03	2.45900E+00	9.90730E-01	1.93000E-03
4.30600E+00	9.94340E-01	2.76000E-03	2.45900E+00	9.86520E-01	2.23000E-03
4.30600E+00	9.96920E-01	2.79000E-03	2.45900E+00	9.86340E-01	1.93000E-03
4.30600E+00	9.96060E-01	2.83000E-03	2.45900E+00	9.90420E-01	2.42000E-03
4.30600E+00	9.97400E-01	2.94000E-03	2.45900E+00	9.89740E-01	2.03000E-03
4.30600E+00	9.92810E-01	2.69000E-03	2.45900E+00	9.91520E-01	2.72000E-03
4.30600E+00	9.92560E-01	2.88000E-03	2.45900E+00	9.90290E-01	2.13000E-03
4.30600E+00	9.93650E-01	2.88000E-03	2.45900E+00	9.89270E-01	1.93000E-03
4.30600E+00	9.94970E-01	2.85000E-03	2.60000E+00	9.95710E-01	1.42000E-03
2.45900E+00	9.94820E-01	3.21000E-03	2.60000E+00	9.96180E-01	1.42000E-03
2.45900E+00	9.94940E-01	3.21000E-03	2.60000E+00	9.95340E-01	1.52000E-03
2.45900E+00	9.95140E-01	3.21000E-03	2.60000E+00	9.95470E-01	1.52000E-03
2.45900E+00	9.95640E-01	3.21000E-03	2.60000E+00	9.96910E-01	1.42000E-03
2.45900E+00	9.95080E-01	3.21000E-03	2.60000E+00	9.96140E-01	1.42000E-03
2.45900E+00	9.95260E-01	3.21000E-03	2.60000E+00	9.95890E-01	1.42000E-03
2.45900E+00	9.95200E-01	3.21000E-03	2.60000E+00	9.96240E-01	1.62000E-03
4.30600E+00	9.94020E-01	1.92000E-03	2.60000E+00	9.96670E-01	1.52000E-03
4.30600E+00	9.94460E-01	1.91000E-03	2.60000E+00	9.96760E-01	1.62000E-03
4.30600E+00	9.93550E-01	1.91000E-03	2.60000E+00	9.96370E-01	1.62000E-03
4.30600E+00	9.94010E-01	1.91000E-03	2.60000E+00	9.96430E-01	1.72000E-03
4.30600E+00	9.92810E-01	3.27000E-03	2.60000E+00	9.97010E-01	1.62000E-03
4.30600E+00	9.94960E-01	1.91000E-03	2.60000E+00	9.96500E-01	1.62000E-03
4.30600E+00	9.93780E-01	1.90000E-03	2.60000E+00	9.96340E-01	1.62000E-03
4.30600E+00	9.96680E-01	1.95000E-03	2.60000E+00	9.96580E-01	1.71000E-03
4.30600E+00	9.85950E-01	7.71000E-03	2.60000E+00	9.96450E-01	1.62000E-03
2.35000E+00	9.94940E-01	3.54000E-03			

```
chi =  2.5464 (upper bound = 9.49). The data tests normal.
      Output from statistical treatment
keff vs enrichment
 Number of data points (n)                          183
 Linear regression, k(X)                            0.9950 + (-1.5719E-04)*X
 Confidence on fit (1-gamma) [input]                 95.0%
 Confidence on proportion (alpha) [input]            95.0%
 Proportion of population falling above
 lower tolerance interval (rho) [input]              99.5%
 Minimum value of X                                  2.3500E+00
 Maximum value of X                                  4.7380E+00
 Average value of X                                  3.0597E+00
 Average value of k                                   0.99453
 Minimum value of k                                   0.98595
```

Figure 6.A.5-1 USLSTATS Output for EALCF

```
Variance of fit, s(k,X)^2                          5.0408E-06
Within variance, s(w)^2                            7.8633E-06
Pooled variance, s(p)^2                            1.2904E-05
Pooled std. deviation, s(p)                        3.5922E-03
C(alpha,rho)*s(p)                                  1.5554E-02
student-t @ (n-2,1-gamma)                          1.64500E+00
Confidence band width, W                           5.9793E-03
Minimum margin of subcriticality, C*s(p)-W         9.5746E-03

Upper subcritical limits: (  2.3500     <= X <=   4.7380    )
***** *********** *******
USL Method 1 (Confidence Band with
Administrative Margin)             USL1 = 0.9390 + (-1.5719E-04)*X
USL Method 2 (Single-Sided Uniform
Width Closed Interval Approach)    USL2 = 0.9795 + (-1.5719E-04)*X
USLs Evaluated Over Range of Parameter X:
**** ********* **** ***** ** ********* **

X:  2.35E+0  2.69E+0  3.03E+0  3.37E+0  3.71E+0  4.06E+0  4.40E+0  4.74E+0
    ---------------------------------------------------------------------
USL-1:  0.9387   0.9386   0.9386   0.9385   0.9385   0.9384   0.9383   0.9383
USL-2:  0.9791   0.9790   0.9790   0.9789   0.9789   0.9788   0.9788   0.9787
    ---------------------------------------------------------------------
```

Table 6.A.5-1 Range of Applicability for Complete Set of 186 Benchmark Experiments

Parameter	Minimum	Maximum
Enrichment (wt % ^{235}U)	2.350%	4.738%
Fuel rod pitch (cm)	1.30	2.54
Fuel pellet outer diameter (cm)	0.790	1.265
Fuel rod diameter (cm)	0.9400	1.4172
$H/^{235}U$ atom ratio	72.7	403.9
Soluble boron (ppm by weight)	0	4986
Cluster gap (cm)	1.206	13.750
Boron (^{10}B) plate loading (g/cm^2)	0.0000	0.0670
Energy of average neutron lethargy causing fission (eV)	0.09781	0.77219

Table 6.A.5-2 Correlation Coefficients and USLs for Benchmark Experiments

Variable	R^2	R	Range of Applicability	USLSTATS Correlation	USL Low	USL High
Enrichment (wt% ^{235}U)	0.00410	0.064	2.35<=X<=4.738	0.9390+-1.57E-04X	0.9382	0.9386
Fuel rod pitch (cm)	0.00150	0.039	1.3<=X<=2.54	0.9380+2.64E-04X	0.9383	0.9386
Fuel pellet outer diameter (cm)	0.00260	0.051	0.79<=X<=1.265	0.9376+8.25E-04X	0.9382	0.9386
Fuel rod diameter (cm)	0.00380	0.062	0.94<=X<=1.4172	0.9372+1.01E-03X	0.9381	0.9386
$H/^{235}U$ atom ratio	3.00E-06	0.002	106.2<=X<=403.9	0.9386-4.74E-08X	0.9385	0.9385
Soluble boron (ppm by weight)	0.01730	0.132	0<=X<=4986	0.9379+3.96E-07X	0.9379	0.9398
Cluster gap (cm)	0.01940	0.139	1.2<=X<=13.8	0.9375+9.82E-05X	0.9376	0.9388
Boron (^{10}B) plate loading (g/cm^2)	0.00006	0.008	0<=X<=0.067	0.9382-1.37E-03X	0.9381	0.9382
Energy of average neutron lethargy causing fission (eV)	0.00900	0.095	0.09781<=X<=0.3447	0.9379+3.45E-03X	0.9382	0.9390

6.A.5.3 Critical Benchmarks

From the International Handbook of Evaluated Criticality Safety Benchmark Experiments, 186 experiments are selected as the basis of the MCNP benchmarking. Experiments were selected for compatibility of materials and geometry with the spent fuel casks. Of particular interest are benchmarks with rectangular arrays of low enriched uranium oxide fuel rods in which reactivity is controlled by soluble boron or borated plates (tubes).

MCNP benchmark cases represent a collection of files composed of inputs directly obtained from references (with cross-section sets adjusted to those used in the cask analysis). NAC modified input files representing unique geometries based on reference input files, and input files constructed from the experimental material and geometry information. All cases were reviewed on a "preparer/checker" principle for modeling consistency with the cask models and the choice of code options. Due to large variations in the benchmark complexities, not all options employed in the cask models are reflected in each of the benchmarks (e.g., UNIVERSE structure). A review of the criticality results did not indicate any result trend due to particular modeling choices (e.g., using the UNIVERSE structure versus a single universe, or employing KSRC versus SDEF sampling).

Key system parameters, the experimental uncertainty, and calculated k_{eff} and σ for each experiment are shown in Table 6.A.5.3-1. Stochastic Monte Carlo error is kept within ±0.2% and each output is checked to assure that the MCNP built-in statistical checks on the results are passed and that all fissile material is sampled.

Scatter plots of k_{eff} versus system parameters for 183 data point sets (full set minus three high lethargy points above 0.35 eV) are created (see Figure 6.A.5.3-1 through Figure 6.A.5.3-9). Included in these scatter plots are linear regression lines with a corresponding correlation coefficient (R^2) to statistically indicate any trend or lack thereof. Scatter plates are created for k_{eff} versus the following:

- Enrichment in ^{235}U (wt % ^{235}U)
- Fuel rod pitch (cm)
- Fuel pellet outer diameter (cm)
- Fuel rod outer diameter (cm)
- Hydrogen/uranium (^{235}U) atom ratio

- Soluble boron (ppm by weight)
- Cluster gap spacing (spacing between assemblies in cm)
- Boron (^{10}B) content (wt %)
- Energy of average neutron lethargy causing fission (eV)

Figure 6.A.5.3-1 k_{eff} versus Fuel Enrichment

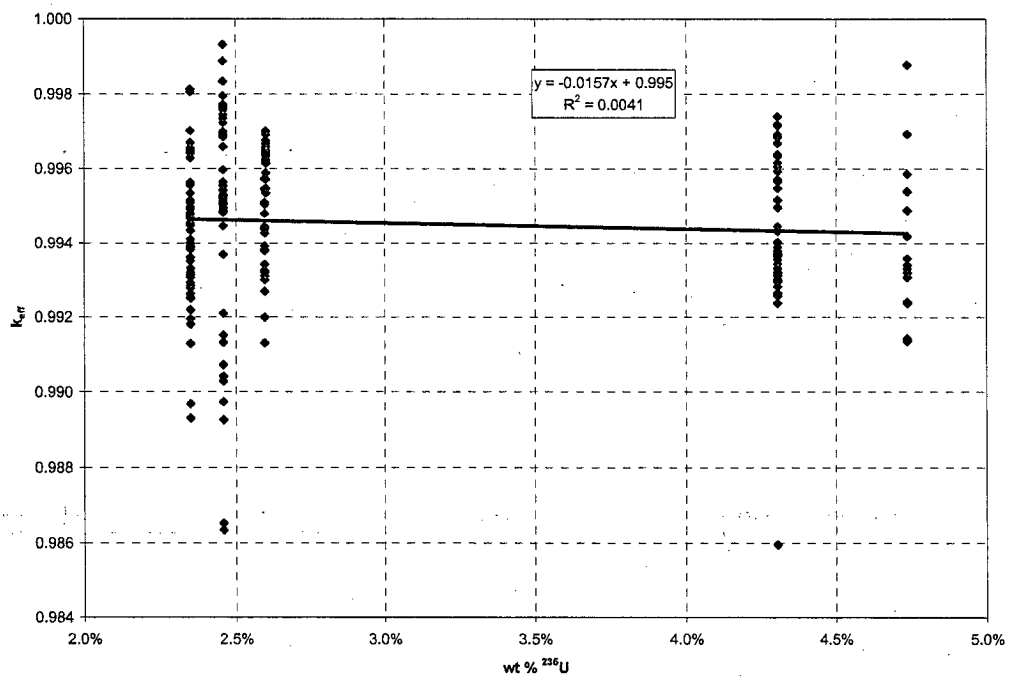

Figure 6.A.5.3-2 k_{eff} versus Rod Pitch

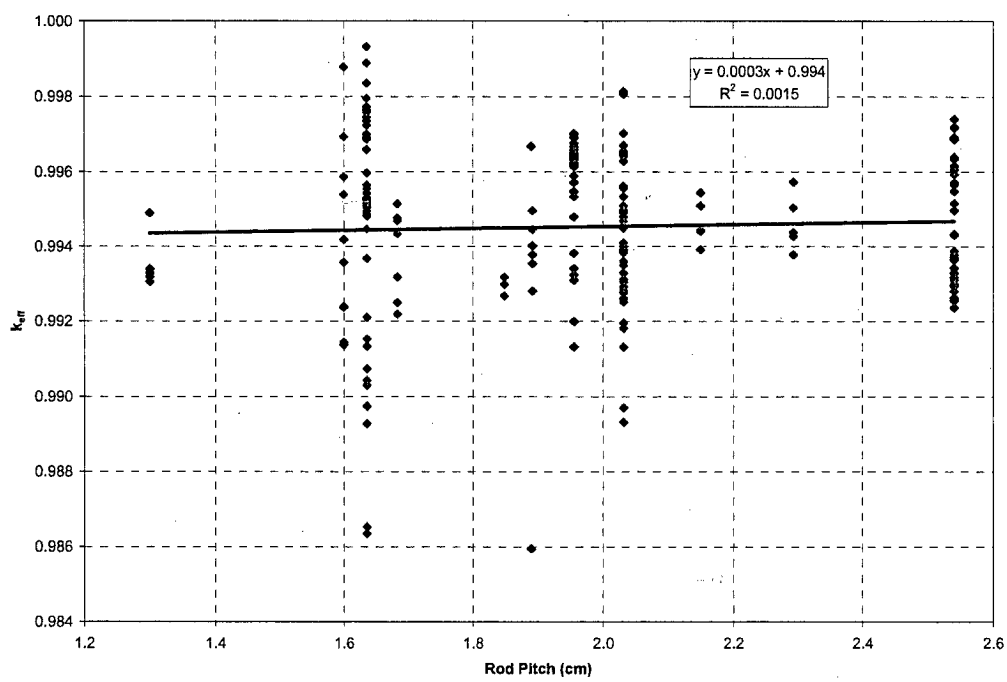

Figure 6.A.5.3-3 k_{eff} versus Fuel Pellet Diameter

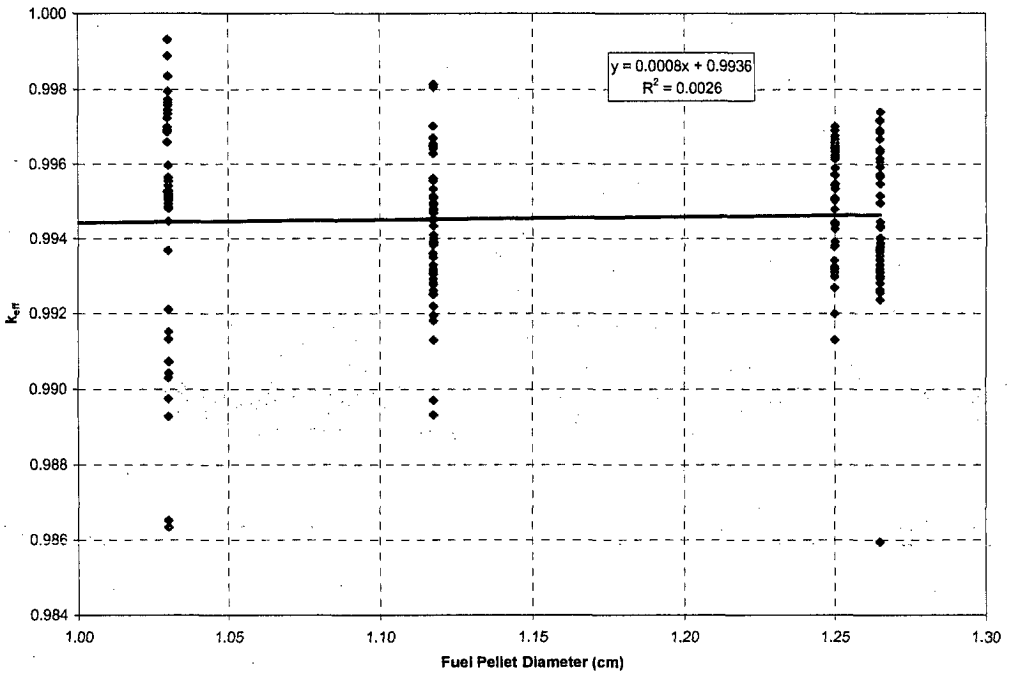

Figure 6.A.5.3-4 k_{eff} versus Fuel Rod Outside Diameter

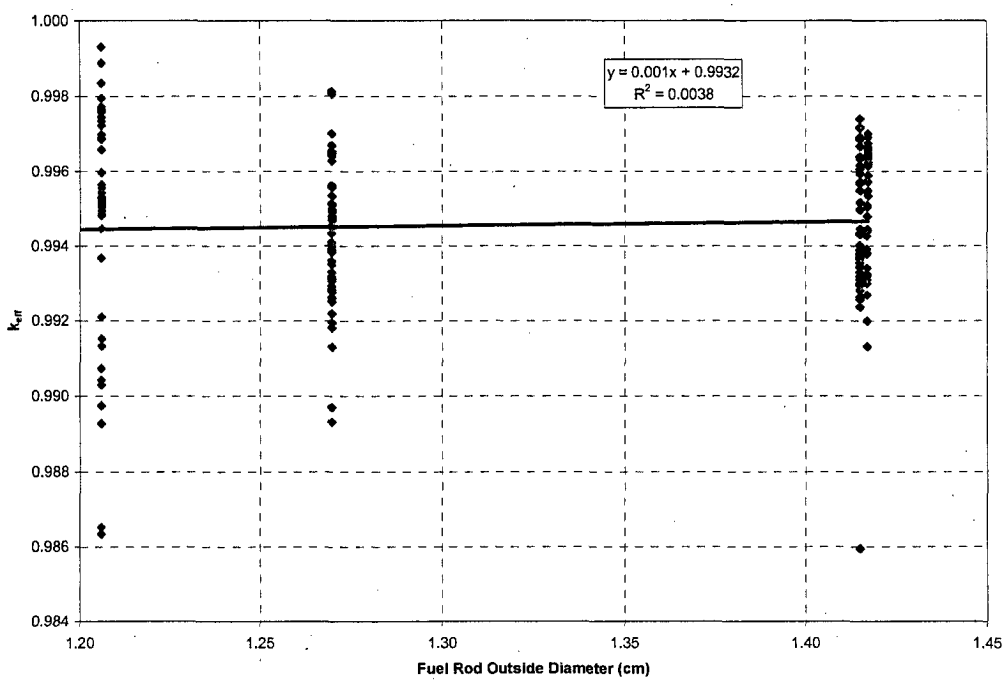

Figure 6.A.5.3-5 k_{eff} versus Hydrogen/^{235}U Atom Ratio

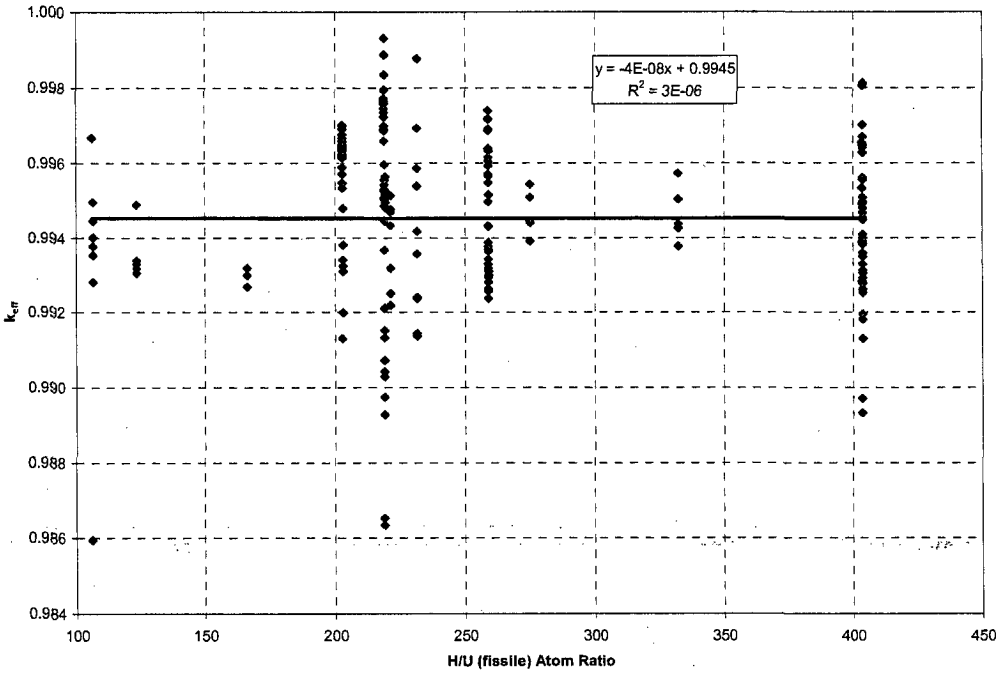

Figure 6.A.5.3-6 k_{eff} versus Soluble Boron Concentration

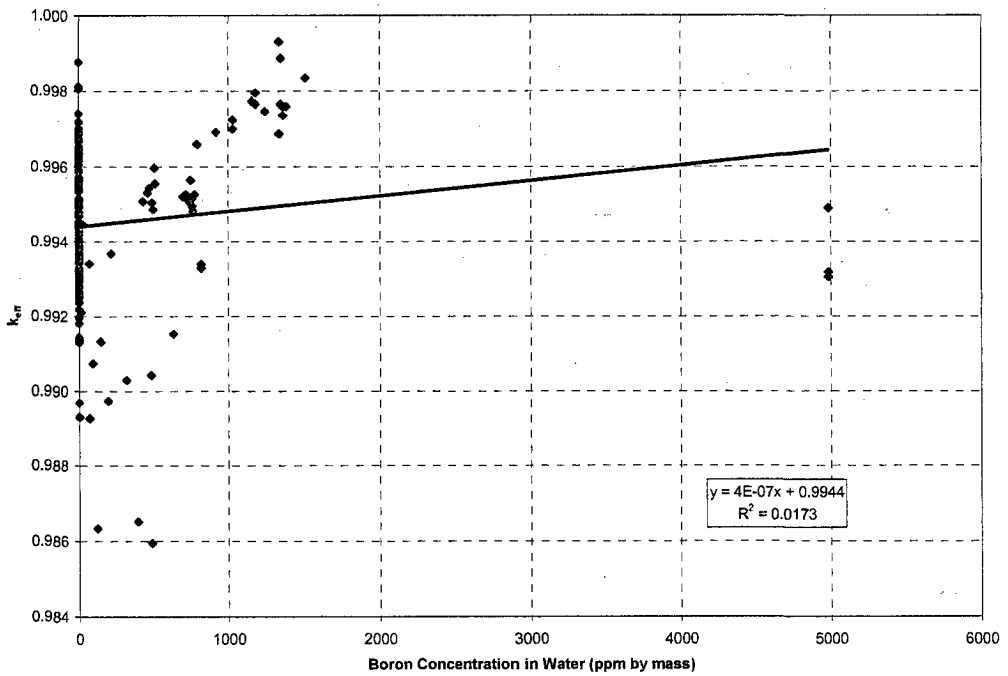

Figure 6.A.5.3-7 k_{eff} versus Cluster Gap Thickness

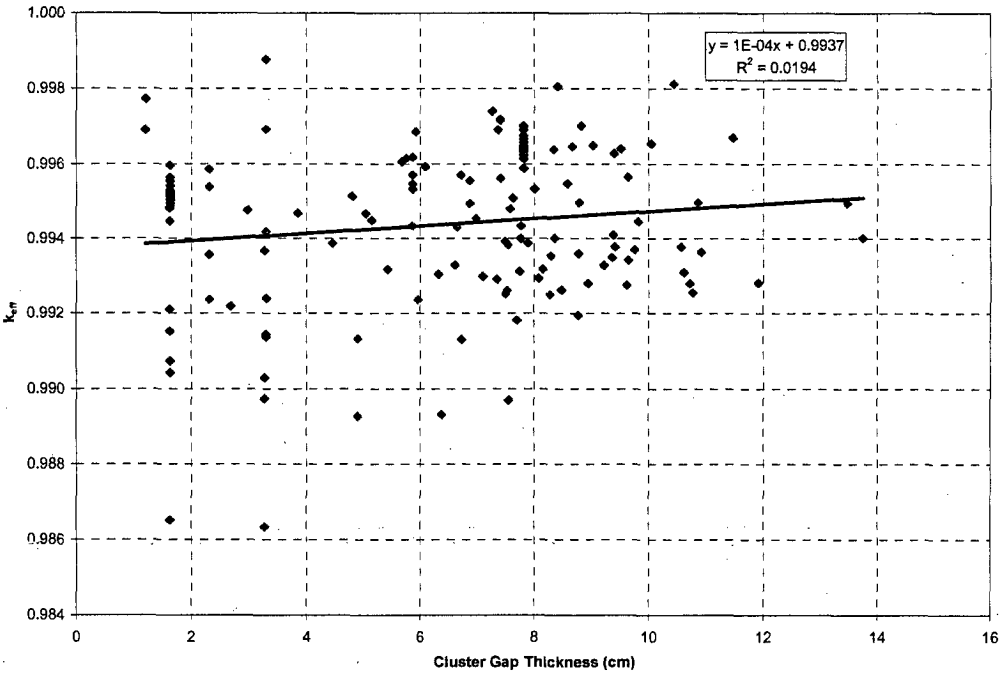

Figure 6.A.5.3-8 k_{eff} versus ^{10}B Plate Loading

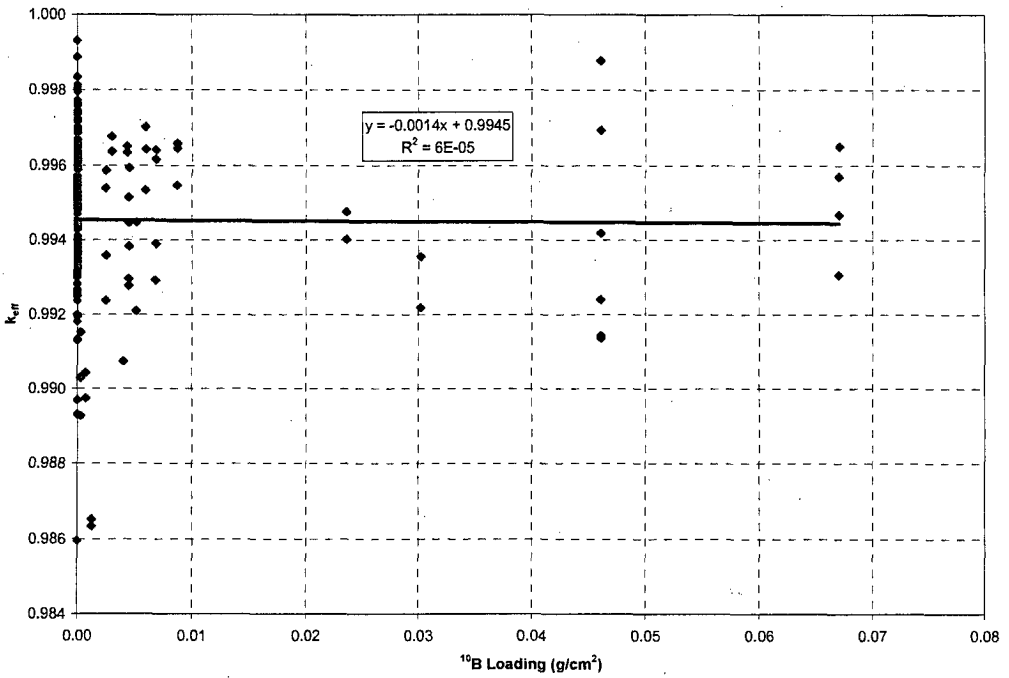

Figure 6.A.5.3-9 k_{eff} versus Energy of Average Neutron Lethargy Causing Fission

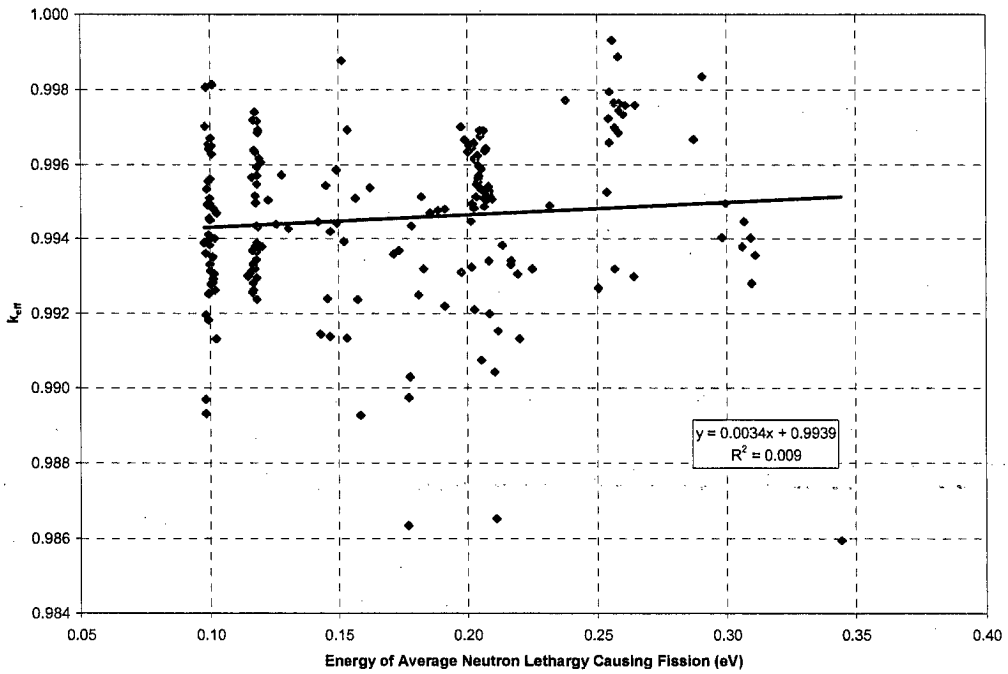

Table 6.A.5.3-1 MCNP Validation Statistics

Case	1.01	1.02	1.03	1.04	1.05	1.06	1.07	1.08
Clusters	1	3	3	3	3	3	3	3
Enrichment (wt % ^{235}U)	2.35%	2.35%	2.35%	2.35%	2.35%	2.35%	2.35%	2.35%
Pitch (cm)	2.032	2.032	2.032	2.032	2.032	2.032	2.032	2.032
Fuel OD (cm)	1.118	1.118	1.118	1.118	1.118	1.118	1.118	1.118
Clad OD (cm)	1.270	1.270	1.270	1.270	1.270	1.270	1.270	1.270
Clad Mat'l	Al	Al	Al	Al	Al	Al	Al	Al
H/U (fissile)	404	404	404	404	404	404	404	404
Soluble B (ppm)	-	-	-	-	-	-	-	-
Absorber Type	-	-	-	-	-	-	-	-
Cluster Gap (cm)	-	11.9	8.4	10.1	6.4	8.0	4.5	7.6
Reflector	H_2O	H_2O	H_2O	H_2O	H_2O	H_2O	H_2O	H_2O
Plate Loading ($g^{10}B/cm^2$)	-	-	-	-	-	-	-	-
EALCF (MeV)	9.916E-8	1.010E-7	9.838E-8	9.933E-8	9.837E-8	9.874E-8	9.781E-8	9.826E-8
Exp. σ	0.0030	0.0030	0.0030	0.0030	0.0030	0.0030	0.0031	0.0030
k_{eff}	0.99491	0.99283	0.99806	0.99655	0.98931	0.99534	0.99388	0.98969
σ	0.00165	0.00155	0.00155	0.00165	0.00169	0.00162	0.00150	0.00152

Table 6.A.5.3-1 MCNP Validation Statistics (cont'd)

Case	2.01	2.02	2.03	2.04	2.05
Clusters	1	1	1	3	3
Enrichment (wt % ^{235}U)	4.31%	4.31%	4.31%	4.31%	4.31%
Pitch (cm)	2.540	2.540	2.540	2.540	2.540
Fuel OD (cm)	1.265	1.265	1.265	1.265	1.265
Clad OD (cm)	1.415	1.415	1.415	1.415	1.415
Clad Material	Al	Al	Al	Al	Al
H/U (fissile)	259	259	259	259	259
Soluble B (ppm)	-	-	-	-	-
Absorber Type	-	-	-	-	-
Cluster Gap (cm)	-	-	-	10.6	7.1
Reflector	H_2O	H_2O	H_2O	H_2O	H_2O
Plate Loading ($g^{10}B/cm^2$)	-	-	-	-	-
EALCF (MeV)	1.177E-7	1.164E-7	1.175E-7	1.161E-7	1.146E-7
Exp. σ	0.0020	0.0020	0.0020	0.0018	0.0019
k_{eff}	0.99516	0.99367	0.99634	0.99311	0.99300
σ	0.00195	0.00157	0.00190	0.00193	0.00161

Table 6.A.5.3-1 MCNP Validation Statistics (cont'd)

Case	6.01	6.02	6.03	6.04	6.05	6.06	6.07	6.08	6.09
Clusters	1	1	1	1	1	1	1	1	1
Enrichment (wt % ^{235}U)	2.60%	2.60%	2.60%	2.60%	2.60%	2.60%	2.60%	2.60%	2.60%
Pitch (cm)	1.849	1.849	1.849	1.956	1.956	1.956	1.956	1.956	2.150
Fuel OD (cm)	1.250	1.250	1.250	1.250	1.250	1.250	1.250	1.250	1.250
Clad OD (cm)	1.417	1.417	1.417	1.417	1.417	1.417	1.417	1.417	1.417
Clad Material	Al	Al	Al	Al	Al	Al	Al	Al	Al
H/U (fissile)	166	166	166	203	203	203	203	203	275
Soluble B (ppm)	-	-	-	-	-	-	-	-	-
Absorber Type	-	-	-	-	-	-	-	-	-
Cluster Gap (cm)	-	-	-	-	-	-	-	-	-
Reflector	H_2O	H_2O	H_2O	H_2O	H_2O	H_2O	H_2O	H_2O	H_2O
Plate Loading (g^{10}B /cm^2)	-	-	-	-	-	-	-	-	-
EALCF (MeV)	2.506E-7	2.568E-7	2.642E-7	1.915E-7	1.978E-7	2.018E-7	2.085E-7	2.136E-7	1.422E-7
Exp. σ	0.0020	0.0020	0.0020	0.0020	0.0020	0.0020	0.0020	0.0020	0.0020
k_{eff}	0.99268	0.99319	0.99299	0.99479	0.99310	0.99324	0.99199	0.99382	0.99445
σ	0.00065	0.00076	0.00074	0.00074	0.00069	0.00070	0.00071	0.00071	0.00069

Table 6.A.5.3-1 MCNP Validation Statistics (cont'd)

Case	6.10	6.11	6.12	6.13	6.14	6.15	6.16	6.17	6.18
Clusters	1	1	1	1	1	1	1	1	1
Enrichment (wt % ^{235}U)	2.60%	2.60%	2.60%	2.60%	2.60%	2.60%	2.60%	2.60%	2.60%
Pitch (cm)	2.150	2.150	2.150	2.150	2.293	2.293	2.293	2.293	2.293
Fuel OD (cm)	1.250	1.250	1.250	1.250	1.250	1.250	1.250	1.250	1.250
Clad OD (cm)	1.417	1.417	1.417	1.417	1.417	1.417	1.417	1.417	1.417
Clad Material	Al	Al	Al	Al	Al	Al	Al	Al	Al
H/U (fissile)	275	275	275	275	332	332	332	332	332
Soluble B (ppm)	-	-	-	-	-	-	-	-	-
Absorber Type	-	-	-	-	-	-	-	-	-
Cluster Gap (cm)	-	-	-	-	-	-	-	-	-
Reflector	H_2O	H_2O	H_2O	H_2O	H_2O	H_2O	H_2O	H_2O	H_2O
Plate Loading ($g^{10}B/cm^2$)	-	-	-	-	-	-	-	-	-
EALCF (MeV)	1.453E-7	1.496E-7	1.523E-7	1.568E-7	1.202E-7	1.227E-7	1.257E-7	1.280E-7	1.306E-7
Exp. σ	0.0020	0.0020	0.0020	0.0020	0.0020	0.0020	0.0020	0.0020	0.0020
k_{eff}	0.99544	0.99441	0.99392	0.99509	0.99378	0.99504	0.99438	0.99573	0.99427
σ	0.00073	0.00071	0.00078	0.00076	0.00070	0.00075	0.00067	0.00070	0.00076

Table 6.A.5.3-1 MCNP Validation Statistics (cont'd)

Case	8.01	8.02	8.03	8.04	8.05	8.06	8.07	8.08
Clusters	3 × 3	3 × 3	3 × 3	3 × 3	3 × 3	3 × 3	3 × 3	3 × 3
Enrichment (wt % ^{235}U)	2.46%	2.46%	2.46%	2.46%	2.46%	2.46%	2.46%	2.46%
Pitch (cm)	1.636	1.636	1.636	1.636	1.636	1.636	1.636	1.636
Fuel OD (cm)	1.030	1.030	1.030	1.030	1.030	1.030	1.030	1.030
Clad OD (cm)	1.206	1.206	1.206	1.206	1.206	1.206	1.206	1.206
Clad Material	Al	Al	Al	Al	Al	Al	Al	Al
H/U (fissile)	219	219	219	219	219	219	219	219
Soluble B (ppm)	1511	1336	1336	1182	1182	1033	1033	794
Absorber Type	-	-	-	-	-	-	-	-
Cluster Gap (cm)	-	-	-	-	-	-	-	-
Reflector	H_2O	H_2O	H_2O	H_2O	H_2O	H_2O	H_2O	H_2O
Plate Loading ($g^{10}B/cm^2$)	-	-	-	-	-	-	-	-
EALCF (MeV)	2.907E-7	2.583E-7	2.559E-7	2.548E-7	2.566E-7	2.568E-7	2.544E-7	2.548E-7
Exp. σ	0.0012	0.0012	0.0012	0.0012	0.0012	0.0012	0.0012	0.0012
k_{eff}	0.99835	0.99686	0.99931	0.99795	0.99765	0.99699	0.99723	0.99659
σ	0.00060	0.00063	0.00032	0.00063	0.00069	0.00061	0.00066	0.00073

Table 6.A.5.3-1 MCNP Validation Statistics (cont'd)

Case	8.09	8.10	8.11	8.12	8.13	8.14	8.15	8.16	8.17
Clusters	3 × 3	3 × 3	3 × 3	3 × 3	3 × 3	3 × 3	3 × 3	5	5 × 5
Enrichment (wt % ^{235}U)	2.46%	2.46%	2.46%	2.46%	2.46%	2.46%	2.46%	2.46%	2.46%
Pitch (cm)	1.636	1.636	1.636	1.636	1.636	1.636	1.636	1.636	1.636
Fuel OD (cm)	1.030	1.030	1.030	1.030	1.030	1.030	1.030	1.030	1.030
Clad OD (cm)	1.206	1.206	1.206	1.206	1.206	1.206	1.206	1.206	1.206
Clad Material	Al	Al	Al	Al	Al	Al	Al	Al	Al
H/U (fissile)	219	219	219	219	219	219	219	219	219
Soluble B (ppm)	779	1245	1384	1348	1348	1363	1363	1158	921
Absorber Type	-	-	-	-	-	-	-	-	-
Cluster Gap (cm)	-	-	-	-	-	-	-	1.2	1.2
Reflector	H_2O	H_2O	H_2O	H_2O	H_2O	H_2O	H_2O	H_2O	H_2O
Plate Loading ($g^{10}B/cm^2$)	-	-	-	-	-	-	-	-	-
EALCF (MeV)	2.538E-7	2.586E-7	2.647E-7	2.587E-7	2.582E-7	2.600E-7	2.609E-7	2.379E-7	2.063E-7
Exp. σ	0.0012	0.0012	0.0012	0.0012	0.0012	0.0012	0.0012	0.0012	0.0012
k_{eff}	0.99526	0.99745	0.99759	0.99765	0.99888	0.99735	0.99758	0.99772	0.99691
σ	0.00072	0.00065	0.00068	0.00065	0.00070	0.00067	0.00071	0.00070	0.00062

Table 6.A.5.3-1 MCNP Validation Statistics (cont'd)

Case	9.01	9.02	9.03	9.04	9.05	9.06	9.07	9.08	9.09	9.10	9.11	9.12	9.13
Clusters	3	3	3	3	3	3	3	3	3	3	3	3	3
Enrichment (wt % ^{235}U)	4.31%	4.31%	4.31%	4.31%	4.31%	4.31%	4.31%	4.31%	4.31%	4.31%	4.31%	4.31%	4.31%
Pitch (cm)	2.540	2.540	2.540	2.540	2.540	2.540	2.540	2.540	2.540	2.540	2.540	2.540	2.540
Fuel OD (cm)	1.265	1.265	1.265	1.265	1.265	1.265	1.265	1.265	1.265	1.265	1.265	1.265	1.265
Clad OD (cm)	1.415	1.415	1.415	1.415	1.415	1.415	1.415	1.415	1.415	1.415	1.415	1.415	1.415
Clad Material	Al	Al	Al	Al	Al	Al	Al	Al	Al	Al	Al	Al	Al
H/U (fissile)	259	259	259	259	259	259	259	259	259	259	259	259	259
Soluble B (ppm)	-	-	-	-	-	-	-	-	-	-	-	-	-
Absorber Type	304L SS (no B)	304L SS (no B)	304L SS (no B)	304L SS (no B)	304L SS (1.05% B)	304L SS (1.05% B)	304L SS (1.62% B)	304L SS (1.62% B)	Boral	Cu	Cu	Cu	Cu
Cluster Gap (cm)	8.6	9.7	9.2	9.8	6.1	8.1	5.8	7.9	6.7	8.2	9.4	8.5	9.6
Reflector	H_2O	H_2O	H_2O	H_2O	H_2O	H_2O	H_2O	H_2O	H_2O	H_2O	H_2O	H_2O	H_2O
Plate Loading ($g^{10}B/cm^2$)	0.00000	0.00000	0.00000	0.00000	0.00455	0.00455	0.00690	0.00690	0.06704	-	-	-	-
EALCF(MeV)	1.183E-7	1.181E-7	1.168E-7	1.179E-7	1.182E-7	1.182E-7	1.191E-7	1.182E-7	1.183E-7	1.173E-7	1.176E-7	1.169E-7	1.163E-7
Exp. σ	0.0021	0.0021	0.0021	0.0021	0.0021	0.0021	0.0021	0.0021	0.0021	0.0021	0.0021	0.0021	0.0021
k_{eff}	0.99548	0.99343	0.99330	0.99371	0.99593	0.99295	0.99616	0.99389	0.99571	0.99319	0.99378	0.99263	0.99566
σ	0.00191	0.00182	0.00187	0.00192	0.00174	0.00193	0.00198	0.00175	0.00209	0.00153	0.00178	0.00191	0.00177

Table 6.A.5.3-1 *MCNP Validation Statistics (cont'd)*

Case	9.14	9.15	9.16	9.17	9.18	9.19	9.20	9.21	9.22	9.23	9.24	9.25	9.26	9.27
Clusters	3	3	3	3	3	3	3	3	3	3	3	3	3	3
Enrichment (wt % ^{235}U)	4.31%	4.31%	4.31%	4.31%	4.31%	4.31%	4.31%	4.31%	4.31%	4.31%	4.31%	4.31%	4.31%	4.31%
Pitch (cm)	2.540	2.540	2.540	2.540	2.540	2.540	2.540	2.540	2.540	2.540	2.540	2.540	2.540	2.540
Fuel OD (cm)	1.265	1.265	1.265	1.265	1.265	1.265	1.265	1.265	1.265	1.265	1.265	1.265	1.265	1.265
Clad OD (cm)	1.415	1.415	1.415	1.415	1.415	1.415	1.415	1.415	1.415	1.415	1.415	1.415	1.415	1.415
Clad Material	Al	Al	Al	Al	Al	Al	Al	Al	Al	Al	Al	Al	Al	Al
H/U (fissile)	259	259	259	259	259	259	259	259	259	259	259	259	259	259
Soluble B (ppm)	-	-	-	-	-	-	-	-	-	-	-	-	-	-
Absorber Type	Cu (0.989 wt % Cd)	Cu (0.989 wt % Cd)	Cd	Cd	Cd	Cd	Cd	Cd	Cd	Cd	Al (no B)	Al (no B)	Zircaloy-4	Zircaloy-4
Cluster Gap (cm)	6.7	8.4	5.9	7.4	6.0	7.4	5.9	7.4	5.7	7.3	10.7	10.8	10.9	10.9
Reflector	H_2O	H_2O	H_2O	H_2O	H_2O	H_2O	H_2O	H_2O	H_2O	H_2O	H_2O	H_2O	H_2O	H_2O
Plate Loading ($g^{10}B/cm^2$)	-	-	-	-	-	-	-	-	-	-	0.00000	0.00000	-	-
EALCF(MeV)	1.186E-7	1.171E-7	1.186E-7	1.183E-7	1.183E-7	1.168E-7	1.182E-7	1.187E-7	1.199E-7	1.173E-7	1.167E-7	1.165E-7	1.181E-7	1.177E-7
Exp. σ	0.0021	0.0021	0.0021	0.0021	0.0021	0.0021	0.0021	0.0021	0.0021	0.0021	0.0021	0.0021	0.0021	0.0021
k_{eff}	0.99431	0.99639	0.99686	0.99716	0.99237	0.99719	0.99434	0.99692	0.99606	0.99740	0.99281	0.99256	0.99365	0.99497
σ	0.00188	0.00207	0.00183	0.00166	0.00194	0.00187	0.00179	0.00183	0.00189	0.00206	0.00168	0.00197	0.00197	0.00193

Table 6.A.5.3-1 MCNP Validation Statistics (cont'd)

Case	11.03	11.04	11.05	11.06	11.07	11.08	11.09
Clusters	3	3	3	3	3	3	3
Enrichment (wt % ^{235}U)	2.46%	2.46%	2.46%	2.46%	2.46%	2.46%	2.46%
Pitch (cm)	1.636	1.636	1.636	1.636	1.636	1.636	1.636
Fuel OD (cm)	1.030	1.030	1.030	1.030	1.030	1.030	1.030
Clad OD (cm)	1.206	1.206	1.206	1.206	1.206	1.206	1.206
Clad Material	Al	Al	Al	Al	Al	Al	Al
H/U (fissile)	219	219	219	219	219	219	219
Soluble B (ppm)	769	764	762	753	739	721	702
Absorber Type	-	-	-	-	-	-	-
Cluster Gap (cm)	1.6	1.6	1.6	1.6	1.6	1.6	1.6
Reflector	H_2O	H_2O	H_2O	H_2O	H_2O	H_2O	H_2O
Plate Loading ($g^{10}B$ /cm^2)	-	-	-	-	-	-	-
EALCF [MeV]	2.027E-7	2.020E-7	2.035E-7	2.044E-7	2.065E-7	2.068E-7	2.085E-7
Exp. σ	0.0032	0.0032	0.0032	0.0032	0.0032	0.0032	0.0032
k_{eff}	0.99482	0.99494	0.99514	0.99564	0.99508	0.99526	0.99520
σ	0.00031	0.00030	0.00030	0.00030	0.00031	0.00030	0.00031

Table 6.A.5.3-1 MCNP Validation Statistics (cont'd)

Case	13.01	13.02	13.03	13.04	13.05	13.06	13.07
Clusters	3	3	3	3	3	3	3
Enrichment (wt % ^{235}U)	4.31%	4.31%	4.31%	4.31%	4.31%	4.31%	4.31%
Pitch (cm)	1.892	1.892	1.892	1.892	1.892	1.892	1.892
Fuel OD (cm)	1.265	1.265	1.265	1.265	1.265	1.265	1.265
Clad OD (cm)	1.415	1.415	1.415	1.415	1.415	1.415	1.415
Clad Material	Al	Al	Al	Al	Al	Al	Al
H/U (fissile)	107	107	107	107	107	107	107
Soluble B (ppm)	-	-	-	-	-	-	-
Absorber Type	304L SS (no B)	304L SS (1.05% B)	Boral B	Boroflex	Cd	Cu	Cu (0.989 wt % Cd)
Cluster Gap (cm)	13.8	9.8	8.3	8.4	8.9	13.5	10.6
Reflector	Steel	Steel	Steel	Steel	Steel	Steel	Steel
Plate Loading ($g^{10}B/cm^2$)	0.00000	0.00455	0.03022	0.02361	-	-	-
EALCF (MeV)	2.982E-7	3.068E-7	3.111E-7	3.094E-7	3.097E-7	2.998E-7	3.061E-7
Exp. σ	0.0018	0.0018	0.0018	0.0018	0.0032	0.0018	0.0018
k_{eff}	0.99402	0.99446	0.99355	0.99401	0.99281	0.99496	0.99378
σ	0.00068	0.00064	0.00064	0.00064	0.00066	0.00063	0.00062

Table 6.A.5.3-1 MCNP Validation Statistics (cont'd)

Case	14.01	14.02	14.05	14.06	14.07
Clusters	1	1	1	1	1
Enrichment (wt % ^{235}U)	4.31%	4.31%	4.31%	4.31%	4.31%
Pitch (cm)	1.890	1.890	1.890	1.715	1.715
Fuel OD (cm)	1.265	1.265	1.265	1.265	1.265
Clad OD (cm)	1.415	1.415	1.415	1.415	1.415
Clad Material	Al	Al	Al	Al	Al
H/U (fissile)	106	106	106	73	73
Soluble B (ppm)	0	491	2539	0	1030
Absorber Type	-	-	-	-	-
Cluster Gap (cm)	-	-	-	-	-
Reflector	H_2O	H_2O	H_2O	H_2O	H_2O
Plate Loading ($g^{10}B/cm^2$)	-	-	-	-	-
EALCF (MeV)	2.873E-7	3.447E-7	6.003E-7	5.175E-7	7.722E-7
Exp. σ	0.0019	0.0077	0.0069	0.0033	0.0051
k_{eff}	0.99668	0.98595	1.00221	1.00245	0.99973
σ	0.00044	0.00045	0.00043	0.00045	0.00044

Table 6.A.5.3-1 MCNP Validation Statistics (cont'd)

Case	16.01	16.02	16.03	16.04	16.05	16.06	16.07	16.08	16.09	16.10
Clusters	3	3	3	3	3	3	3	3	3	3
Enrichment [wt % ^{235}U]	2.35%	2.35%	2.35%	2.35%	2.35%	2.35%	2.35%	2.35%	2.35%	2.35%
Pitch (cm)	2.032	2.032	2.032	2.032	2.032	2.032	2.032	2.032	2.032	2.032
Fuel OD (cm)	1.118	1.118	1.118	1.118	1.118	1.118	1.118	1.118	1.118	1.118
Clad OD (cm)	1.270	1.270	1.270	1.270	1.270	1.270	1.270	1.270	1.270	1.270
Clad Material	Al	Al	Al	Al	Al	Al	Al	Al	Al	Al
H/U (fissile)	404	404	404	404	404	404	404	404	404	404
Soluble B (ppm)	-	-	-	-	-	-	-	-	-	-
Absorber Type	304L SS (no B)	304L SS (no B)	304L SS (no B)	304L SS (no B)	304L SS (no B)	304L SS (no B)	304L SS (no B)	304L SS (1.05% B)	304L SS (1.05% B)	304L SS (1.62% B)
Cluster Gap (cm)	6.9	7.6	7.5	7.4	7.8	10.4	11.5	7.6	9.6	7.4
Reflector	H_2O	H_2O	H_2O	H_2O	H_2O	H_2O	H_2O	H_2O	H_2O	H_2O
Plate Loading ($g^{10}B/cm^2$)	0.00000	0.00000	0.00000	0.00000	0.00000	0.00000	0.00000	0.00455	0.00455	0.00690
EALCF (MeV)	1.000E-7	9.983E-8	9.947E-8	1.001E-7	1.002E-7	1.009E-7	1.001E-7	9.993E-8	1.004E-7	1.012E-7
Exp. σ	0.0031	0.0031	0.0031	0.0031	0.0031	0.0031	0.0031	0.0031	0.0031	0.0031
k_{eff}	0.99494	0.99509	0.99252	0.99562	0.99313	0.99813	0.99670	0.99383	0.99277	0.99292
σ	0.00171	0.00153	0.00157	0.00162	0.00173	0.00179	0.00175	0.00172	0.00157	0.00162

Table 6.A.5.3-1 MCNP Validation Statistics (cont'd)

Case	16.11	16.12	16.13	16.14	16.15	16.16	16.17	16.18	16.19	16.20	16.21	16.22
Clusters	3	3	3	3	3	3	3	3	3	3	3	3
Enrichment [wt % ^{235}U]	2.35%	2.35%	2.35%	2.35%	2.35%	2.35%	2.35%	2.35%	2.35%	2.35%	2.35%	2.35%
Pitch(cm)	2.032	2.032	2.032	2.032	2.032	2.032	2.032	2.032	2.032	2.032	2.032	2.032
Fuel OD (cm)	1.118	1.118	1.118	1.118	1.118	1.118	1.118	1.118	1.118	1.118	1.118	1.118
Clad OD (cm)	1.270	1.270	1.270	1.270	1.270	1.270	1.270	1.270	1.270	1.270	1.270	1.270
Clad Material	Al	Al	Al	Al	Al	Al	Al	Al	Al	Al	Al	Al
H/U (fissile)	404	404	404	404	404	404	404	404	404	404	404	404
Soluble B (ppm)	-	-	-	-	-	-	-	-	-	-	-	-
Absorber Type	304L SS (1.62% B)	Boral	Boral	Boral	Cu	Cu	Cu	Cu	Cu	Cu (0.989 wt % Cd)	Cd	Cd
Cluster Gap (cm)	9.5	6.3	9.0	5.1	6.6	7.7	7.5	6.9	7.0	5.2	6.7	7.6
Reflector	H_2O	H_2O	H_2O	H_2O	H_2O	H_2O	H_2O	H_2O	H_2O	H_2O	H_2O	H_2O
Plate Loading ($g^{10}B/cm^2$)	0.00690	0.06704	0.06704	0.06704	-	-	-	-	-	-	-	-
EALCF (MeV)	9.962E-8	1.016E-7	1.006E-7	1.025E-7	1.000E-7	9.944E-8	9.904E-8	9.919E-8	9.971E-8	1.001E-7	1.024E-7	1.014E-7
Exp. σ	0.0031	0.0031	0.0031	0.0031	0.0031	0.0031	0.0031	0.0031	0.0031	0.0031	0.0031	0.0031
k_{eff}	0.99641	0.99306	0.99650	0.99468	0.99330	0.99181	0.99392	0.99556	0.99454	0.99449	0.99130	0.99480
σ	0.00154	0.00161	0.00152	0.00162	0.00157	0.00153	0.00155	0.00172	0.00165	0.00155	0.00166	0.00157

Table 6.A.5.3-1 MCNP Validation Statistics (cont'd)

Case	16.23	16.24	16.25	16.26	16.27	16.28	16.29	16.30	16.31	16.32
Clusters	3	3	3	3	3	3	3	3	3	3
Enrichment [wt % ^{235}U]	2.35%	2.35%	2.35%	2.35%	2.35%	2.35%	2.35%	2.35%	2.35%	2.35%
Pitch(cm)	2.032	2.032	2.032	2.032	2.032	2.032	2.032	2.032	2.032	2.032
Fuel OD (cm)	1.118	1.118	1.118	1.118	1.118	1.118	1.118	1.118	1.118	1.118
Clad OD (cm)	1.270	1.270	1.270	1.270	1.270	1.270	1.270	1.270	1.270	1.270
Clad Material	Al	Al	Al	Al	Al	Al	Al	Al	Al	Al
H/U (fissile)	404	404	404	404	404	404	404	404	404	404
Soluble B (ppm)	-	-	-	-	-	-	-	-	-	-
Absorber Type	Cd	Cd	Cd	Cd	Cd	Al (no B)	Al (no B)	Al (no B)	Zircaloy-4	Zircaloy-4
Cluster Gap cm)	9.4	7.8	9.4	7.5	9.4	8.7	8.8	8.8	8.8	8.8
Reflector	H_2O	H_2O	H_2O	H_2O	H_2O	H_2O	H_2O	H_2O	H_2O	H_2O
Plate Loading ($g^{10}B/cm^2$)	-	-	-	-	-	0.00000	0.00000	0.00000	-	-
EALCF (MeV)	1.010E-7	1.018E-7	1.006E-7	1.019E-7	9.948E-8	9.991E-8	9.843E-8	9.807E-8	9.964E-8	9.834E-8
Exp. σ	0.0031	0.0031	0.0031	0.0031	0.0031	0.0031	0.0031	0.0031	0.0031	0.0031
k_{eff}	0.99350	0.99400	0.99628	0.99262	0.99410	0.99647	0.99360	0.99702	0.99497	0.99195
σ	0.00184	0.00152	0.00169	0.00151	0.00168	0.00166	0.00157	0.00160	0.00163	0.00172

Table 6.A.5.3-1 MCNP Validation Statistics (cont'd)

Case	35.01	35.02	40.01	40.02	40.03	40.04	40.05	40.06	40.07	40.08	40.09	40.10
Clusters	1	1	4	4	4	4	4	4	4	4	4	4
Enrichment (wt % ^{235}U)	2.60%	2.60%	4.74%	4.74%	4.74%	4.74%	4.74%	4.74%	4.74%	4.74%	4.74%	4.74%
Pitch (cm)	1.956	1.956	1.600	1.600	1.600	1.600	1.600	1.600	1.600	1.600	1.600	1.600
Fuel OD (cm)	1.250	1.250	0.790	0.790	0.790	0.790	0.790	0.790	0.790	0.790	0.790	0.790
Clad OD (cm)	1.417	1.417	0.940	0.940	0.940	0.940	0.940	0.940	0.940	0.940	0.940	0.940
Clad Material	Al	Al	Al alloy	Al alloy	Al alloy	Al alloy	Al alloy	Al alloy	Al alloy	Al alloy	Al alloy	Al alloy
H/U (fissile)	203	203	231	231	231	231	231	231	231	231	231	231
Soluble B (ppm)	70	148	-	-	-	-	-	-	-	-	-	-
Absorber Type	-	-	Z2 CN18/10 SS (1.10% B)	Z2 CN18/10 SS (1.10% B)	Z2 CN18/10 SS (1.10% B)	Z2 CN18/10 SS (1.10% B)	Boral	Boral	Boral	Boral	Boral	Boral
Cluster Gap (cm)	-	-	2.3	2.3	2.3	2.3	3.3	3.3	3.3	3.3	3.3	3.3
Reflector	H_2O	H_2O	H_2O	Lead	Lead	Lead	H_2O	Lead	Lead	Lead	Steel	Steel
Plate Loading ($g^{10}B/cm^2$)	-	-	0.00252	0.00252	0.00252	0.00252	0.04608	0.04608	0.04608	0.04608	0.04608	0.04608
EALCF (MeV)	2.170E-7	2.202E-7	1.493E-7	1.717E-7	1.625E-7	1.576E-7	1.432E-7	1.515E-7	1.470E-7	1.459E-7	1.537E-7	1.469E-7
Exp. σ	0.0018	0.0019	0.0039	0.0041	0.0041	0.0041	0.0042	0.0044	0.0044	0.0044	0.0046	0.0046
k_{eff}	0.99341	0.99131	0.99586	0.99358	0.99539	0.99237	0.99144	0.99878	0.99418	0.99240	0.99693	0.99137
σ	0.00070	0.00078	0.00195	0.00192	0.00203	0.00194	0.00193	0.00196	0.00224	0.00216	0.00190	0.00208

Table 6.A.5.3-1 MCNP Validation Statistics (cont'd)

Case	42.01	42.02	42.03	42.04	42.05	42.06	42.07
Clusters	3	3	3	3	3	3	3
Enrichment (wt % ^{235}U)	2.35%	2.35%	2.35%	2.35%	2.35%	2.35%	2.35%
Pitch (cm)	1.684	1.684	1.684	1.684	1.684	1.684	1.684
Fuel OD (cm)	1.118	1.118	1.118	1.118	1.118	1.118	1.118
Clad OD (cm)	1.270	1.270	1.270	1.270	1.270	1.270	1.270
Clad Materiall	Al	Al	Al	Al	Al	Al	Al
H/U (fissile)	221	221	221	221	221	221	221
Soluble B (ppm)	-	-	-	-	-	-	-
Absorber Type	304L SS (no B)	304L SS (1.05% B)	Boral B	Boroflex	Cd	Cu	Cu-Cd
Cluster Gap (cm)	8.3	4.8	2.7	3.0	3.9	7.8	5.4
Reflector	Steel	Steel	Steel	Steel	Steel	Steel	Steel
Plate Loading ($g^{10}B/cm^2$)	0.00000	0.00455	0.03022	0.02361	-	-	-
EALCF (MeV)	1.813E-7	1.824E-7	1.915E-7	1.887E-7	1.857E-7	1.786E-7	1.833E-7
Exp. σ	0.0016	0.0016	0.0016	0.0017	0.0033	0.0016	0.0018
k_{eff}	0.99250	0.99514	0.99219	0.99476	0.99469	0.99434	0.99319
σ	0.00171	0.00183	0.00169	0.00169	0.00161	0.00191	0.00157

Table 6.A.5.3-1 MCNP Validation Statistics (cont'd)

Case	50.03	50.03	50.03	50.03	50.03
Clusters	1	1	1	1	1
Enrichment (wt % ^{235}U)	4.74%	4.74%	4.74%	4.74%	4.74%
Pitch (cm)	1.300	1.300	1.300	1.300	1.300
Fuel OD (cm)	0.790	0.790	0.790	0.790	0.790
Clad OD (cm)	0.940	0.940	0.940	0.940	0.940
Clad Material	Al alloy	Al alloy	Al alloy	Al alloy	Al alloy
H/U (fissile)	124	124	124	124	124
Soluble B (ppm)	821	821	4986	4986	4986
Absorber Type	-	-	-	-	-
Cluster Gap (cm)	-	-	-	-	-
Reflector	Borated H_2O	Borated H_2O	Borated H_2O	Borated H_2O	Borated H_2O
Plate Loading ($g^{10}B$ /cm^2)	-	-	-	-	-
EALCF (MeV)	2.170E-7	2.083E-7	2.318E-7	2.252E-7	2.195E-7
Exp. σ	0.0010	0.0010	0.0010	0.0010	0.0010
k_{eff}	0.99330	0.99340	0.99489	0.99319	0.99306
σ	0.00080	0.00071	0.00075	0.00075	0.00080

Table 6.A.5.3-1 MCNP Validation Statistics (cont'd)

Case	51.01	51.02	51.03	51.04	51.05	51.06	51.07	51.08	51.09
Clusters	9	9	9	9	9	9	9	9	9
Enrichment (wt % ^{235}U)	2.46%	2.46%	2.46%	2.46%	2.46%	2.46%	2.46%	2.46%	2.46%
Pitch (cm)	1.636	1.636	1.636	1.636	1.636	1.636	1.636	1.636	1.636
Fuel OD (cm)	1.030	1.030	1.030	1.030	1.030	1.030	1.030	1.030	1.030
Clad OD (cm)	1.206	1.206	1.206	1.206	1.206	1.206	1.206	1.206	1.206
Clad Material	Al	Al	Al	Al	Al	Al	Al	Al	Al
H/U (fissile)	219	219	219	219	219	219	219	219	219
Soluble B (ppm)	143	510	514	501	493	474	462	432	217
Absorber Type	none	SS	SS	SS	SS	SS	SS	SS	SS
Cluster Gap (cm)	4.9	1.6	1.6	1.6	1.6	1.6	1.6	1.6	3.3
Reflector	Borated H_2O	Borated H_2O	Borated H_2O	Borated H_2O	Borated H_2O	Borated H_2O	Borated H_2O	Borated H_2O	Borated H_2O
Plate Loading ($g^{10}B/cm^2$)	0.00000	-	-	-	-	-	-	-	-
EALCF (MeV)	1.535E-7	2.045E-7	2.043E-7	2.067E-7	2.074E-7	2.083E-7	2.085E-7	2.098E-7	1.737E-7
Exp. σ	0.0020	0.0024	0.0024	0.0024	0.0024	0.0024	0.0024	0.0024	0.0019
k_{eff}	0.99133	0.99597	0.99555	0.99486	0.99504	0.99542	0.99530	0.99507	0.99368
σ	0.00033	0.00035	0.00033	0.00034	0.00034	0.00034	0.00034	0.00034	0.00033

Table 6.A.5.3-1 MCNP Validation Statistics (cont'd)

Case	51.10	51.11	51.12	51.13	51.14	51.15	51.16	51.17	51.18	51.19
Clusters	9	9	9	9	9	9	9	9	9	9
Enrichment (wt % ^{235}U)	2.46%	2.46%	2.46%	2.46%	2.46%	2.46%	2.46%	2.46%	2.46%	2.46%
Pitch (cm)	1.636	1.636	1.636	1.636	1.636	1.636	1.636	1.636	1.636	1.636
Fuel OD (cm)	1.030	1.030	1.030	1.030	1.030	1.030	1.030	1.030	1.030	1.030
Clad OD (cm)	1.206	1.206	1.206	1.206	1.206	1.206	1.206	1.206	1.206	1.206
Clad Material	Al	Al	Al	Al	Al	Al	Al	Al	Al	Al
H/U (fissile)	219	219	219	219	219	219	219	219	219	219
Soluble B (ppm)	15	28	92	395	121	487	197	634	320	72
Absorber Type	B/Al Set 5	B/Al Set 5A	B/Al Set 4	B/Al Set 3	B/Al Set 3	B/Al Set 2	B/Al Set 2	B/Al Set 1	B/Al Set 1	B/Al Set 1
Cluster Gap (cm)	1.6	1.6	1.6	1.6	3.3	1.6	3.3	1.6	3.3	4.9
Reflector	Borated H_2O	Borated H_2O	Borated H_2O	Borated H_2O	Borated H_2O	Borated H_2O	Borated H_2O	Borated H_2O	Borated H_2O	Borated H_2O
Plate Loading ($g^{10}B/cm^2$)	0.00517	0.00519	0.00403	0.00128	0.00128	0.00078	0.00078	0.00032	0.00032	0.00032
EALCF (MeV)	2.029E-7	2.015E-7	2.056E-7	2.112E-7	1.773E-7	2.106E-7	1.775E-7	2.119E-7	1.780E-7	1.587E-7
p. σ	0.0019	0.0019	0.0019	0.0022	0.0019	0.0024	0.0020	0.0027	0.0021	0.0019
k_{eff}	0.99210	0.99447	0.99073	0.98652	0.98634	0.99042	0.98974	0.99152	0.99029	0.98927
σ	0.00034	0.00034	0.00034	0.00034	0.00034	0.00034	0.00034	0.00034	0.00035	0.00035

Table 6.A.5.3-1 MCNP Validation Statistics (cont'd)

Case	65.01	65.02	65.03	65.04	65.05	65.06	65.07	65.08
Clusters	2	2	2	2	2	2	2	2
Enrichment (wt % ^{235}U)	2.60%	2.60%	2.60%	2.60%	2.60%	2.60%	2.60%	2.60%
Pitch (cm)	1.956	1.956	1.956	1.956	1.956	1.956	1.956	1.956
Fuel OD (cm)	1.250	1.250	1.250	1.250	1.250	1.250	1.250	1.250
Clad OD (cm)	1.417	1.417	1.417	1.417	1.417	1.417	1.417	1.417
Clad Material	Al	Al	Al	Al	Al	Al	Al	Al
H/U (fissile)	203	203	203	203	203	203	203	203
Soluble B (ppm)	-	-	-	-	-	-	-	-
Absorber Type	none	304L SS (No B)	304L SS (0.67% B)	304L SS (0.98% B)	none	304L SS (No B)	304L SS (No B)	304L SS (No B)
Cluster Gap (cm)	5.9	5.9	5.9	5.9	7.8	7.8	7.8	7.8
Reflector	H_2O	H_2O	H_2O	H_2O	H_2O	H_2O	H_2O	H_2O
Plate Loading ($g^{10}B/cm^2$)	-	0.00000	0.00599	0.00875	-	0.00000	0.00000	0.00000
EALCF [MeV]	2.045E-7	2.030E-7	2.054E-7	2.038E-7	2.049E-7	2.030E-7	2.055E-7	2.040E-7
Exp. σ	0.0014	0.0014	0.0015	0.0015	0.0014	0.0014	0.0014	0.0016
k_{eff}	0.99571	0.99618	0.99534	0.99547	0.99691	0.99614	0.99589	0.99624
σ	0.00023	0.00022	0.00023	0.00023	0.00023	0.00023	0.00023	0.00023

Table 6.A.5.3-1 MCNP Validation Statistics (cont'd)

Case	65.09	65.10	65.11	65.12	65.13	65.14	65.15	65.16	65.17
Clusters	2	2	2	2	2	2	2	2	2
Enrichment (wt % ^{235}U)	2.60%	2.60%	2.60%	2.60%	2.60%	2.60%	2.60%	2.60%	2.60%
Pitch (cm)	1.956	1.956	1.956	1.956	1.956	1.956	1.956	1.956	1.956
Fuel OD (cm)	1.250	1.250	1.250	1.250	1.250	1.250	1.250	1.250	1.250
Clad OD (cm)	1.417	1.417	1.417	1.417	1.417	1.417	1.417	1.417	1.417
Clad Material	Al	Al	Al	Al	Al	Al	Al	Al	Al
H/U (fissile)	203	203	203	203	203	203	203	203	203
Soluble B (ppm)	-	-	-	-	-	-	-	-	-
Absorber Type	304L SS (No B)	304L SS (0.67% B)	304L SS (0.67% B)	304L SS (0.67% B)	304L SS (0.67% B)	304L SS (0.98% B)	304L SS (0.98% B)	304L SS (0.98% B)	304L SS (0.98% B)
Cluster Gap (cm)	7.8	7.8	7.8	7.8	7.8	7.8	7.8	7.8	7.8
Reflector	H_2O	H_2O	H_2O	H_2O	H_2O	H_2O	H_2O	H_2O	H_2O
Plate Loading (g^{10}B /cm^2)	0.00000	0.00299	0.00299	0.00599	0.00599	0.00438	0.00438	0.00875	0.00875
EALCF [MeV]	1.993E-7	2.050E-7	2.069E-7	2.072E-7	1.977E-7	2.010E-7	2.004E-7	2.027E-7	2.017E-7
Exp. σ	0.0015	0.0016	0.0016	0.0017	0.0016	0.0016	0.0016	0.0017	0.0016
k_{eff}	0.99667	0.99676	0.99637	0.99643	0.99701	0.99650	0.99634	0.99658	0.99645
σ	0.00022	0.00022	0.00023	0.00023	0.00022	0.00023	0.00023	0.00022	0.00023

6.A.6 References

1. 10 CFR 72, "Licensing Requirements for the Independent Storage of Spent Nuclear Fuel, High-Level Radioactive Waste and Reactor-Related Greater Than Class C Waste," Code of Federal Regulations, US Government, Washington, DC.
2. NUREG-1536, "Standard Review Plan for Dry Cask Storage Systems," US Nuclear Regulatory Commission, Washington, DC, January 1997.
3. "MCNP – A General Monte Carlo N-Particle Transport Code, Version 5," X-5 Monte Carlo Team, Los Alamos National Laboratory, Los Alamos, NM, April 24, 2003.
4. CC-710/MCNP: Data Libraries for MCNP5, "MCNP5 DATA: Standard Neutron, Photoatomic, Photonuclear, and Electron Data Libraries for MCNP5," February 2003.
5. CCC-545-NUREG/CR-0200, "Standard Composition Library," Petrie, L.M., et al., Rev. 6, Volume 3 Section M8, September 1998.
6. ANSI/ANS - 8.1-1983, "Nuclear Criticality Safety in Operations with Fissionable Materials Outside Reactors," American Nuclear Society, La Grange Park, IL.
7. ANSI/ANS - 8.17-1984, "Criticality Safety Criteria for the Handling, Storage, and Transportation of LWR Fuel Outside Reactors," American Nuclear Society, La Grange Park, IL.
8. International Handbook of Evaluated Criticality Safety Benchmark Experiments, NEA/NSC/DOC(95)03, September 2003.
9. NUREG/CR-6716, "Recommendations on Fuel Parameters for Standard Technical Specifications for Spent Fuel Storage Casks," US Nuclear Regulatory Commission, Washington, DC, March 2001.
10. NUREG/CR-6361, "Criticality Benchmark Guide for Light-Water-Reactor Fuel in Transportation and Storage Packages," US Nuclear Regulatory Commission, Washington, DC, March 1997.

THIS PAGE INTENTIONALLY LEFT BLANK

6.A.7 Sample Input Files

Sample input files are included for the Storage and Transfer Cask. The Transfer Cask case shown in Figure 6.A.7-1 lists the most reactive UNITAD PWR system MCNP case. The Storage Cask case in Figure 6.A.7-2 represents the most reactive Storage Cask case.

Figure 6.A.7-1 MCNP Transfer Cask Model – UNITAD PWR 21 Assembly – Maximum Reactivity Case

```
TAD Transfer Cask Model -  Fuel Assembly Type: BW15H4 - B&W Core - 15x15
c
c Model Revision 1.03
c
c Infinite Cask Array Model
c
c
c Cells - Fuel Rod - BW15H4 - B&W Core - 15x15
10 1 -10.5216 -10   u=9 $ Fuel
11 3 -0.9982 -11 +10  u=9 $ Plenum + Fuel to Clad Gap
12 2 -6.56 -12 +11  u=9 $ Clad + End Plugs
13 4 -0.9994 +12   u=9 $ Outside Fuel Rod
c Cells - Guide Tube - BW15H4 - B&W Core - 15x15
20 4 -0.9994 -20       u=8 $ Inside Guide Tube
21 2 -6.56 -21 +20      u=8 $ Guide Tube
22 4 -0.9994 +21       u=8 $ Outside Guide Tube
c Cell Cards Instrument Tube - BW15H4 - B&W Core - 15x15
30 4 -0.9994 -30       u=7 $ Inside Inst. Tube
31 2 -6.56 -31 +30      u=7 $ Inst. Tube
32 4 -0.9994 +31       u=7 $ Outside Inst. Tube
c Array_15x15_208
40 4 -0.9994 -40 +41 -42 +43
      trcl=(0 0 5.08)   lat=1 u=6 fill=-7:7 -7:7 0:0
      9 9 9 9 9 9 9 9 9 9 9 9 9 9 9
      9 9 9 9 9 9 9 9 9 9 9 9 9 9 9
      9 9 9 9 9 8 9 9 9 8 9 9 9 9 9
      9 9 9 8 9 9 9 9 9 9 9 8 9 9 9
      9 9 9 9 9 9 9 9 9 9 9 9 9 9 9
      9 9 8 9 9 8 9 9 9 8 9 9 8 9 9
      9 9 9 9 9 9 9 9 9 9 9 9 9 9 9
      9 9 9 9 9 9 9 7 9 9 9 9 9 9 9
      9 9 9 9 9 9 9 9 9 9 9 9 9 9 9
      9 9 8 9 9 8 9 9 9 8 9 9 8 9 9
      9 9 9 9 9 9 9 9 9 9 9 9 9 9 9
      9 9 9 8 9 9 9 9 9 9 9 8 9 9 9
      9 9 9 9 9 8 9 9 9 8 9 9 9 9 9
      9 9 9 9 9 9 9 9 9 9 9 9 9 9 9
      9 9 9 9 9 9 9 9 9 9 9 9 9 9 9
c Cells - Fuel Assembly Array Inserted Into Assembly - cellPWRAssy
50 4 -0.9994 -50      fill=6 u=5 $ Array
51 4 -0.9994 -51 +50 -50.6 -50.5    u=5 $ Fuel Width Envelope
52 5 -3.9134 -51  +50.6     u=5 $ Lower Nozzle
53 6 -0.8874 -51   +50.5    u=5 $ Upper Nozzle
54 4 -0.9994 +51       u=5 $ Remaining Space
c Cell Cards - Borated Stainless Tube
311 4 -0.9994 -311      u=4 $ Space in Tube
312 14 -7.810 -312 +311 -316 +315 +314  u=4 $ Fuel Tube Top
313 14 -7.810 -312 +311 -316 +315 -313  u=4 $ Fuel Tube Bottom
314 14 -7.810 -312 +311 -314 +313 -315  u=4 $ Fuel Tube Left
315 14 -7.810 -312 +311 -314 +313 +316  u=4 $ Fuel Tube Right
```

Figure 6.A.7-1 MCNP Transfer Cask Model – UNITAD PWR 21 Assembly – Maximum Reactivity Case

```
316 4 -0.9994 -312 +311 #312 #313 #314 #315     u=4 $ Model Space withn Tube Box
317 4 -0.9994 +312 +311     u=4 $ Exterior Space
c Cell Cards - Disk Stack
601 7 -7.94 -604 *trcl=( 0.0000 0.0000 2.5400 )    u=3 $ Bottom weldment disk
602 7 -7.94 -601 *trcl=( 0.0000 0.0000 7.6200 )    u=3 $ Support disk 1
603 8 -2.70 -602 *trcl=( 0.0000 0.0000 15.8750 )    u=3 $ Heat transfer disk 1
604 like 602 but   *trcl=( 0.0000 0.0000 24.1300 )    u=3 $ Support disk 2
605 like 603 but   *trcl=( 0.0000 0.0000 32.3850 )    u=3 $ Heat transfer disk 2
606 like 602 but   *trcl=( 0.0000 0.0000 40.6400 )    u=3 $ Support disk 3
607 like 603 but   *trcl=( 0.0000 0.0000 48.8950 )    u=3 $ Heat transfer disk 3
608 like 602 but   *trcl=( 0.0000 0.0000 57.1500 )    u=3 $ Support disk 4
609 like 603 but   *trcl=( 0.0000 0.0000 65.4050 )    u=3 $ Heat transfer disk 4
610 like 602 but   *trcl=( 0.0000 0.0000 73.6600 )    u=3 $ Support disk 5
611 like 603 but   *trcl=( 0.0000 0.0000 81.9150 )    u=3 $ Heat transfer disk 5
612 like 602 but   *trcl=( 0.0000 0.0000 90.1700 )    u=3 $ Support disk 6
613 like 603 but   *trcl=( 0.0000 0.0000 98.4250 )    u=3 $ Heat transfer disk 6
614 like 602 but   *trcl=( 0.0000 0.0000 106.6800 )    u=3 $ Support disk 7
615 like 603 but   *trcl=( 0.0000 0.0000 114.9350 )    u=3 $ Heat transfer disk 7
616 like 602 but   *trcl=( 0.0000 0.0000 123.1900 )    u=3 $ Support disk 8
617 like 603 but   *trcl=( 0.0000 0.0000 131.4450 )    u=3 $ Heat transfer disk 8
618 like 602 but   *trcl=( 0.0000 0.0000 139.7000 )    u=3 $ Support disk 9
619 like 603 but   *trcl=( 0.0000 0.0000 147.9550 )    u=3 $ Heat transfer disk 9
620 like 602 but   *trcl=( 0.0000 0.0000 156.2100 )    u=3 $ Support disk 10
621 like 603 but   *trcl=( 0.0000 0.0000 164.4650 )    u=3 $ Heat transfer disk 10
622 like 602 but   *trcl=( 0.0000 0.0000 172.7200 )    u=3 $ Support disk 11
623 like 603 but   *trcl=( 0.0000 0.0000 180.9750 )    u=3 $ Heat transfer disk 11
624 like 602 but   *trcl=( 0.0000 0.0000 189.2300 )    u=3 $ Support disk 12
625 like 603 but   *trcl=( 0.0000 0.0000 197.4850 )    u=3 $ Heat transfer disk 12
626 like 602 but   *trcl=( 0.0000 0.0000 205.7400 )    u=3 $ Support disk 13
627 like 603 but   *trcl=( 0.0000 0.0000 213.9950 )    u=3 $ Heat transfer disk 13
628 like 602 but   *trcl=( 0.0000 0.0000 222.2500 )    u=3 $ Support disk 14
629 like 603 but   *trcl=( 0.0000 0.0000 230.5050 )    u=3 $ Heat transfer disk 14
630 like 602 but   *trcl=( 0.0000 0.0000 238.7600 )    u=3 $ Support disk 15
631 like 603 but   *trcl=( 0.0000 0.0000 247.0150 )    u=3 $ Heat transfer disk 15
632 like 602 but   *trcl=( 0.0000 0.0000 255.2700 )    u=3 $ Support disk 16
633 like 603 but   *trcl=( 0.0000 0.0000 263.5250 )    u=3 $ Heat transfer disk 16
634 like 602 but   *trcl=( 0.0000 0.0000 271.7800 )    u=3 $ Support disk 17
635 like 603 but   *trcl=( 0.0000 0.0000 280.0350 )    u=3 $ Heat transfer disk 17
636 like 602 but   *trcl=( 0.0000 0.0000 288.2900 )    u=3 $ Support disk 18
637 like 603 but   *trcl=( 0.0000 0.0000 296.5450 )    u=3 $ Heat transfer disk 18
638 like 602 but   *trcl=( 0.0000 0.0000 304.8000 )    u=3 $ Support disk 19
639 like 603 but   *trcl=( 0.0000 0.0000 313.0550 )    u=3 $ Heat transfer disk 19
640 like 602 but   *trcl=( 0.0000 0.0000 321.3100 )    u=3 $ Support disk 20
641 like 603 but   *trcl=( 0.0000 0.0000 329.5650 )    u=3 $ Heat transfer disk 20
642 like 602 but   *trcl=( 0.0000 0.0000 337.8200 )    u=3 $ Support disk 21
643 like 603 but   *trcl=( 0.0000 0.0000 346.0750 )    u=3 $ Heat transfer disk 21
644 like 602 but   *trcl=( 0.0000 0.0000 354.3300 )    u=3 $ Support disk 22
645 like 603 but   *trcl=( 0.0000 0.0000 362.5850 )    u=3 $ Heat transfer disk 22
646 like 602 but   *trcl=( 0.0000 0.0000 370.8400 )    u=3 $ Support disk 23
647 like 603 but   *trcl=( 0.0000 0.0000 379.0950 )    u=3 $ Heat transfer disk 23
```

Figure 6.A.7-1 MCNP Transfer Cask Model – UNITAD PWR 21 Assembly – Maximum Reactivity Case

```
648 like 602 but   *trcl=( 0.0000 0.0000 387.3500 )    u=3 $ Support disk 24
649 like 603 but   *trcl=( 0.0000 0.0000 395.6050 )    u=3 $ Heat transfer disk 24
650 like 602 but   *trcl=( 0.0000 0.0000 403.8600 )    u=3 $ Support disk 25
651 like 603 but   *trcl=( 0.0000 0.0000 412.1150 )    u=3 $ Heat transfer disk 25
652 7 -7.94 -603 *trcl=( 0.0000 0.0000 420.3700 )    u=3 $ Top weldment disk
653 4 -0.9994       $ Outside Disks
      #601 #602 #603 #604 #605 #606 #607 #608 #609 #610
      #611 #612 #613 #614 #615 #616 #617 #618 #619 #620
      #621 #622 #623 #624 #625 #626 #627 #628 #629 #630
      #631 #632 #633 #634 #635 #636 #637 #638 #639 #640
      #641 #642 #643 #644 #645 #646 #647 #648 #649 #650
      #651
      #652        u=3
c Cell Cards - Basket
701 4 -0.9994 -701  #702  fill=4 ( -28.7528 56.8706 0.0000 )     $ Tube/Disk 1
            *trcl=( -28.7528 56.8706 0.0000 )    u=2
702 4 -0.9994 -51   fill=5 *trcl=( -28.0748 56.1926 0.0000 )    u=2 $ Assembly 1
703 4 -0.9994 -701  #704  fill=4 ( 0.0000 56.8706 0.0000 )     $ Tube/Disk 2
            *trcl=( 0.0000 56.8706 0.0000 )    u=2
704 4 -0.9994 -51   fill=5 *trcl=( 0.0000 56.1926 0.0000 )    u=2 $ Assembly 2
705 4 -0.9994 -701  #706  fill=4 ( 28.7528 56.8706 0.0000 )     $ Tube/Disk 3
            *trcl=( 28.7528 56.8706 0.0000 )    u=2
706 4 -0.9994 -51   fill=5 *trcl=( 28.0748 56.1926 0.0000 )    u=2 $ Assembly 3
707 4 -0.9994 -701  #708  fill=4 ( -56.8706 28.7528 0.0000 )     $ Tube/Disk 4
            *trcl=( -56.8706 28.7528 0.0000 )    u=2
708 4 -0.9994 -51   fill=5 *trcl=( -56.1926 28.0748 0.0000 )    u=2 $ Assembly 4
709 4 -0.9994 -701  #710  fill=4 ( -28.7528 28.7528 0.0000 )     $ Tube/Disk 5
            *trcl=( -28.7528 28.7528 0.0000 )    u=2
710 4 -0.9994 -51   fill=5 *trcl=( -28.0748 28.0748 0.0000 )    u=2 $ Assembly 5
711 4 -0.9994 -701  #712  fill=4 ( 0.0000 28.7528 0.0000 )     $ Tube/Disk 6
            *trcl=( 0.0000 28.7528 0.0000 )    u=2
712 4 -0.9994 -51   fill=5 *trcl=( 0.0000 28.0748 0.0000 )    u=2 $ Assembly 6
713 4 -0.9994 -701  #714  fill=4 ( 28.7528 28.7528 0.0000 )     $ Tube/Disk 7
            *trcl=( 28.7528 28.7528 0.0000 )    u=2
714 4 -0.9994 -51   fill=5 *trcl=( 28.0748 28.0748 0.0000 )    u=2 $ Assembly 7
715 4 -0.9994 -701  #716  fill=4 ( 56.8706 28.7528 0.0000 )     $ Tube/Disk 8
            *trcl=( 56.8706 28.7528 0.0000 )    u=2
716 4 -0.9994 -51   fill=5 *trcl=( 56.1926 28.0748 0.0000 )    u=2 $ Assembly 8
717 4 -0.9994 -701  #718  fill=4 ( -56.8706 0.0000 0.0000 )     $ Tube/Disk 9
            *trcl=( -56.8706 0.0000 0.0000 )    u=2
718 4 -0.9994 -51   fill=5 *trcl=( -56.1926 0.0000 0.0000 )    u=2 $ Assembly 9
719 4 -0.9994 -701  #720  fill=4 ( -28.7528 0.0000 0.0000 )     $ Tube/Disk 10
            *trcl=( -28.7528 0.0000 0.0000 )    u=2
720 4 -0.9994 -51   fill=5 *trcl=( -28.0748 0.0000 0.0000 )    u=2 $ Assembly 10
721 4 -0.9994 -701  #722  fill=4 ( 0.0000 0.0000 0.0000 )     $ Tube/Disk 11
            *trcl=( 0.0000 0.0000 0.0000 )    u=2
722 4 -0.9994 -51   fill=5 *trcl=( 0.0000 0.0000 0.0000 )    u=2 $ Assembly 11
723 4 -0.9994 -701  #724  fill=4 ( 28.7528 0.0000 0.0000 )     $ Tube/Disk 12
            *trcl=( 28.7528 0.0000 0.0000 )    u=2
724 4 -0.9994 -51   fill=5 *trcl=( 28.0748 0.0000 0.0000 )    u=2 $ Assembly 12
```

Figure 6.A.7-1 MCNP Transfer Cask Model – UNITAD PWR 21 Assembly – Maximum Reactivity Case

```
725 4 -0.9994 -701  #726  fill=4 ( 56.8706 0.0000 0.0000 )     $ Tube/Disk 13
            *trcl=( 56.8706 0.0000 0.0000 )    u=2
726 4 -0.9994 -51   fill=5 *trcl=( 56.1926 0.0000 0.0000 )  u=2 $ Assembly 13
727 4 -0.9994 -701  #728  fill=4 ( -56.8706 -28.7528 0.0000 )     $ Tube/Disk 14
            *trcl=( -56.8706 -28.7528 0.0000 )    u=2
728 4 -0.9994 -51   fill=5 *trcl=( -56.1926 -28.0748 0.0000 )    u=2 $ Assembly 14
729 4 -0.9994 -701  #730  fill=4 ( -28.7528 -28.7528 0.0000 )     $ Tube/Disk 15
            *trcl=( -28.7528 -28.7528 0.0000 )    u=2
730 4 -0.9994 -51   fill=5 *trcl=( -28.0748 -28.0748 0.0000 )    u=2 $ Assembly 15
731 4 -0.9994 -701  #732  fill=4 ( 0.0000 -28.7528 0.0000 )     $ Tube/Disk 16
            *trcl=( 0.0000 -28.7528 0.0000 )    u=2
732 4 -0.9994 -51   fill=5 *trcl=( 0.0000 -28.0748 0.0000 )    u=2 $ Assembly 16
733 4 -0.9994 -701  #734  fill=4 ( 28.7528 -28.7528 0.0000 )     $ Tube/Disk 17
            *trcl=( 28.7528 -28.7528 0.0000 )    u=2
734 4 -0.9994 -51   fill=5 *trcl=( 28.0748 -28.0748 0.0000 )    u=2 $ Assembly 17
735 4 -0.9994 -701  #736  fill=4 ( 56.8706 -28.7528 0.0000 )     $ Tube/Disk 18
            *trcl=( 56.8706 -28.7528 0.0000 )    u=2
736 4 -0.9994 -51   fill=5 *trcl=( 56.1926 -28.0748 0.0000 )    u=2 $ Assembly 18
737 4 -0.9994 -701  #738  fill=4 ( -28.7528 -56.8706 0.0000 )     $ Tube/Disk 19
            *trcl=( -28.7528 -56.8706 0.0000 )    u=2
738 4 -0.9994 -51   fill=5 *trcl=( -28.0748 -56.1926 0.0000 )    u=2 $ Assembly 19
739 4 -0.9994 -701  #740  fill=4 ( 0.0000 -56.8706 0.0000 )     $ Tube/Disk 20
            *trcl=( 0.0000 -56.8706 0.0000 )    u=2
740 4 -0.9994 -51   fill=5 *trcl=( 0.0000 -56.1926 0.0000 )    u=2 $ Assembly 20
741 4 -0.9994 -701  #742  fill=4 ( 28.7528 -56.8706 0.0000 )     $ Tube/Disk 21
            *trcl=( 28.7528 -56.8706 0.0000 )    u=2
742 4 -0.9994 -51   fill=5 *trcl=( 28.0748 -56.1926 0.0000 )    u=2 $ Assembly 21
743 4 -0.99941          $ Canister Cavity
      #701 #703 #705 #707 #709 #711 #713 #715 #717 #719
      #721 #723 #725 #727 #729 #731 #733 #735 #737 #739 #741
      #702 #704 #706 #708 #710 #712 #714 #716 #718 #720
      #722 #724 #726 #728 #730 #732 #734 #736 #738 #740 #742
          fill=3      u=2
c Cell Cards - Canister
801 4 -0.9994 -801     fill=2 u=1 $ Cavity
802 7 -7.940 -802 +801     u=1 $ Canister Shell / Lid / Bottom
803 13 -0.0001 +802      u=1 $ Remaining Space
c Cell Cards - Transfer Cask Geometry
811 13 -0.0001 -811 -812  fill=1 ( 0.0000 0.0000 5.0800 )   $ Cask cavity
812 9 -7.821 -811 +812 -816     $ Bottom plate
813 9 -7.821 -813 +812 +816 -817    $ Inner shell
814 10 -11.344 -814 +813 +816 -817    $ Lead shell
815 11 -1.632 -815 +814 +816 -817    $ NS-4-FR
816 9 -7.821 -811 +815 +816 -817    $ Outer shell
817 9 -7.821 -811 +812 +817     $ Top plate
818 9 -7.821 -818 +819  -824    $ Door rail
819 9 -7.821 -818 -820  -824    $ Door rail
820 9 -7.821 -823 -821 +822 -824    $ Door steel
821 13 -0.0001 -824 +811 #818 #819 #820      $ Exterior space to Reflector
822 0         +824       $ Exterior space
```

Figure 6.A.7-1 MCNP Transfer Cask Model – UNITAD PWR 21 Assembly – Maximum Reactivity Case

```
c Surfaces - Fuel Rod - BW15H4 - B&W Core - 15x15
10 RCC 0.0000 0.0000 11.5888 0.0000 0.0000 365.7600 0.4600 $ Fuel pellet stack
11 RCC 0.0000 0.0000 0.2540 0.0000 0.0000 388.4295 0.4699 $ Annulus + Plenum
12 RCC 0.0000 0.0000 0.0000 0.0000 0.0000 388.9375 0.5258 $ Clad + End-Caps
c Surfaces - Guide Tube - BW15H4 - B&W Core - 15x15
20 CZ 0.5906       $ Guide tube inner surface
21 CZ 0.6261       $ Guide tube outer surface
c Surfaces - Instrument Tube - BW15H4 - B&W Core - 15x15
30 CZ 0.5906       $ Inst tube inner surface
31 CZ 0.6261       $ Inst tube outer surface
c Surfaces - Pitch - BW15H4 - B&W Core - 15x15
40 PX 0.7214       $ Lattice Cell Boundaries
41 PX -0.7214
42 PY 0.7214
43 PY -0.7214
c Surfaces - Fuel Assembly Array Inserted Into Assembly - BW15H4 - B&W Core - 15x15
50 RPP -10.6247 10.6247 -10.6247 10.6247 5.0800 395.6050  $ Array
51 RPP -10.9931 10.9931 -10.9931 10.9931 0.0000 420.6875  $ Assembly Outer Dims
c Surface Cards - Borated Stainless Tube
311 RPP -11.6713 11.6713 -11.6713 11.6713 0.0000 440.0804 $  Space inside tube - cavity extent
312 RPP -12.7889 12.7889 -12.7889 12.7889 5.0800 419.1000 $  Fuel tube body
313 PY -11.1886      $ Absorber Cut Plane
314 PY 11.1886      $ Absorber Cut Plane
315 PX -11.1886      $ Absorber Cut Plane
316 PX 11.1886      $ Absorber Cut Plane
c Surface Cards - Disk Stack
601 RCC 0.0000 0.0000 0.0000 0.0000 0.0000 2.5400 82.8675 $ Structural disk
602 RCC 0.0000 0.0000 0.0000 0.0000 0.0000 2.5400 82.5500 $ Heat transfer disk
603 RCC 0.0000 0.0000 0.0000 0.0000 0.0000 1.9050 82.8675 $ Top weldment disk
604 RCC 0.0000 0.0000 0.0000 0.0000 0.0000 2.5400 82.8675 $ Bottom weldment disk
c Surface Cards - Basket
701 RPP -12.7889 12.7889 -12.7889 12.7889 0.0000 440.0804  $ Structural disk opening
c Surface Cards - Canister
801 RCC 0.0000 0.0000 0.0000 0.0000 0.0000 440.0804  83.1850 $ Canister cavity
802 RCC 0.0000 0.0000 -5.0800 0.0000 0.0000 465.1502  84.4550 $ Canister
c Surface Cards - Transfer Cask Geometry
811 RCC 0.000 0.000 0.000 0.000 0.000 466.7250 104.7750  $ Cask Cylindrical Section
812 CZ 85.7250        $ Cask cavity radius
813 CZ 87.6300        $ Inner shell OR
814 CZ 95.5040        $ Lead shell OR
815 CZ 101.6000        $ Outer shell IR
816 PZ 30.4800        $ Top of bottom plate
817 PZ 431.1650        $ Bottom of top plate
818 RPP -99.8982 99.8982 -104.2924 104.2924 -12.7000 0.0000   $ Door Enclosing Shape
819 PY 89.5350        $ Inside rail surface
820 PY -89.5350        $ Inside rail surface
821 PY 89.535        $ Door surface
822 PY -89.535        $ Door surface
823 RHP 0.0000 0.0000 -12.7000 0.0000 0.0000 12.7000
```

Figure 6.A.7-1 MCNP Transfer Cask Model – UNITAD PWR 21 Assembly – Maximum Reactivity Case

```
          100.1648 0.0000 0.0000 81.43229 -66.6496 0.0000
          -81.4323 -66.6496 0.0000      $ Door prism
*824 RCC 0.000 0.000 -13.200 0.000 0.000 480.4250 105.2750  $ Cylinder to Reflect

c
c Materials List
c
c Fuel Pellet Material   5.00%  Weight UO2 [amu]  269.90
m1    92235.66c -4.407E-02 92238.66c -8.374E-01  8016.62c -1.186E-01
c Zirc Alloy
m2    26054.62c -7.063E-05 24050.62c -4.179E-05  7014.62c -4.980E-04
      26056.62c -1.149E-03 24052.62c -8.370E-04  7015.66c -1.981E-06
      26057.62c -2.702E-05 24053.62c -9.673E-05
      26058.62c -3.631E-06 24054.62c -2.448E-05
      40000.66c -9.823E-01 50000.42c -1.500E-02
c Clad Gap Water (Always Unborated)
m3     1001.62c -1.119E-01  8016.62c -8.881E-01
mt4  lwtr.01t
c Cask Cavity Water (May be Borated)
m4     1001.62c -1.114E-01  8016.62c -8.846E-01
       1001.62c -1.956E-04  8016.62c -3.106E-03  5010.66c -1.237E-04
           5011.66c -5.763E-04
c Lower Nozzle Material
m5
       1001.62c -1.281E-02  8016.62c -1.017E-01
      24050.62c -7.030E-03 26054.62c -3.477E-02 28058.62c -5.653E-02
      24052.62c -1.408E-01 26056.62c -5.655E-01 28060.62c -2.252E-02
      24053.62c -1.627E-02 26057.62c -1.330E-02 28061.62c -9.955E-04
      24054.62c -4.119E-03 26058.62c -1.788E-03 28062.62c -3.222E-03
                                                28064.62c -8.521E-04
      25055.62c -1.771E-02
mt5  lwtr.01t
c Upper Nozzle Material
m6
       1001.62c -5.592E-02  8016.62c -4.439E-01
      24050.62c -3.971E-03 26054.62c -1.964E-02 28058.62c -3.193E-02
      24052.62c -7.955E-02 26056.62c -3.195E-01 28060.62c -1.272E-02
      24053.62c -9.193E-03 26057.62c -7.514E-03 28061.62c -5.624E-04
      24054.62c -2.327E-03 26058.62c -1.010E-03 28062.62c -1.820E-03
                                                28064.62c -4.814E-04
      25055.62c -1.000E-02
mt6  lwtr.01t
c SS304
m7    24050.62c -7.939E-03 26054.62c -3.927E-02 28058.62c -6.384E-02
      24052.62c -1.590E-01 26056.62c -6.387E-01 28060.62c -2.543E-02
      24053.62c -1.838E-02 26057.62c -1.502E-02 28061.62c -1.124E-03
      24054.62c -4.652E-03 26058.62c -2.019E-03 28062.62c -3.639E-03
                                                28064.62c -9.623E-04
      25055.62c -2.000E-02
c Aluminum
```

Figure 6.A.7-1 MCNP Transfer Cask Model – UNITAD PWR 21 Assembly – Maximum Reactivity Case

```
m8     13027.62c -1.000E+00
c Carbon Steel
m9     26054.62c -5.594E-02  6000.66c -1.000E-02
       26056.62c -9.098E-01
       26057.62c -2.140E-02
       26058.62c -2.876E-03
c Lead
m10    82206.66c -2.534E-01
       82207.66c -2.207E-01
       82208.66c -5.259E-01
c NS-F-FR
m11     5010.66c -9.313E-04  7014.62c -1.974E-02  8016.62c -4.250E-01
        5011.66c -3.772E-03  7015.66c -7.852E-05
       13027.62c -2.142E-01  1001.62c -6.001E-02  6000.66c -2.763E-01
c Concrete
m12    26054.62c -7.911E-04 14000.60c -3.370E-01
       26056.62c -1.287E-02
       26057.62c -3.026E-04
       26058.62c -4.067E-05
        1001.62c -1.000E-02 13027.62c -3.400E-02 20000.62c -4.400E-02
        8016.62c -5.320E-01 11023.62c -2.900E-02
c Water Exterior
m13     1001.62c 2.0
        8016.62c 1.0
mt13   lwtr.01t
c Borated Stainless Steel
m14     5010.66c -1.750E-03  5011.66c -9.056E-03
       24050.62c -7.852E-03 26054.62c -3.884E-02 28058.62c -6.314E-02
       24052.62c -1.573E-01 26056.62c -6.317E-01 28060.62c -2.515E-02
       24053.62c -1.818E-02 26057.62c -1.486E-02 28061.62c -1.112E-03
       24054.62c -4.600E-03 26058.62c -1.997E-03 28062.62c -3.599E-03
                                                 28064.62c -9.517E-04
       25055.62c -1.978E-02
c SS304/Cu Heat Fin
m15    24050.62c -4.537E-03 26054.62c -2.244E-02 28058.62c -3.648E-02
       24052.62c -9.088E-02 26056.62c -3.650E-01 28060.62c -1.453E-02
       24053.62c -1.050E-02 26057.62c -8.584E-03 28061.62c -6.425E-04
       24054.62c -2.658E-03 26058.62c -1.154E-03 28062.62c -2.079E-03
                                                 28064.62c -5.499E-04
       25055.62c -1.143E-02
       29000 -0.4286
c
c Rotation Matrix
*TR1 0.0 0.0 0.0 45 135 90 -45 45 90 90 90 0  $ z-rotation 45 degrees
*TR2 0.0 0.0 0.0 135 225 90 45 135 90 90 90 0  $ z-rotation 135 degrees
*TR3 0.0 0.0 0.0 15 105 90 -75 15 90 90 90 0  $ z-rotation 15 degrees
*TR4 0.0 0.0 0.0 30 120 90 -60 30 90 90 90 0  $ z-rotation 30 degrees
*TR5 0.0 0.0 0.0 60 150 90 -30 60 90 90 90 0  $ z-rotation 60 degrees
*TR6 0.0 0.0 0.0 75 165 90 -15 75 90 90 90 0  $ z-rotation 75 degrees
*TR7 0.0 0.0 0.0 8 98 90 -82 8 90 90 90 0  $ z-rotation 8 degrees
```

Figure 6.A.7-1 MCNP Transfer Cask Model – UNITAD PWR 21 Assembly – Maximum Reactivity Case

```
*TR8 0.0 0.0 0.0 102 192 90 12 102 90 90 90 0  $ z-rotation 102 degrees
*TR9 0.0 0.0 0.0 156 246 90 66 156 90 90 90 0  $ z-rotation 156 degrees
*TR10 0.0 0.0 0.0 78 168 90 -12 78 90 90 90 0  $ z-rotation 78 degrees
*TR11 0.0 0.0 0.0 24 114 90 -66 24 90 90 90 0  $ z-rotation 24 degrees
c
c Cell Importances
c
mode n
imp:n 1 132r 0
c
c
c Criticality Controls
c
kcode 2000 1.00 30 1030
c Ones source point in each of the fuel assemblies
ksrc
      -25.1894 59.0780 100.00
      2.8854 59.0780 100.00
      30.9602 59.0780 100.00
      -53.3072 30.9602 100.00
      -25.1894 30.9602 100.00
      2.8854 30.9602 100.00
      30.9602 30.9602 100.00
      59.0780 30.9602 100.00
      -53.3072 2.8854 100.00
      -25.1894 2.8854 100.00
      2.8854 2.8854 100.00
      30.9602 2.8854 100.00
      59.0780 2.8854 100.00
      -53.3072 -25.1894 100.00
      -25.1894 -25.1894 100.00
      2.8854 -25.1894 100.00
      30.9602 -25.1894 100.00
      59.0780 -25.1894 100.00
      -25.1894 -53.3072 100.00
      2.8854 -53.3072 100.00
      30.9602 -53.3072 100.00
c
c
c Random Number Generator Controls
c
RAND GEN=2 SEED=19073486328127
c
c
c Print Control
c
PRINT
c
```

Figure 6.A.7-2 MCNP Storage Cask – UNITAD PWR 21 Assembly – Dry Exterior

```
TAD Storage Cask Model -  Fuel Assembly Type: BW15H4 - B&W Core - 15x15
c Cells - Fuel Rod - BW15H4 - B&W Core - 15x15
10 1 -10.5216 -10   u=9 $ Fuel
11 3 -0.0001 -11 +10  u=9 $ Plenum + Fuel to Clad Gap
12 2 -6.56 -12 +11  u=9 $ Clad + End Plugs
13 4 -0.0001 +12   u=9 $ Outside Fuel Rod
c Cells - Guide Tube - BW15H4 - B&W Core - 15x15
20 4 -0.0001 -20       u=8 $ Inside Guide Tube
21 2 -6.56 -21 +20      u=8 $ Guide Tube
22 4 -0.0001 +21       u=8 $ Outside Guide Tube
c Cell Cards Instrument Tube - BW15H4 - B&W Core - 15x15
30 4 -0.0001 -30       u=7 $ Inside Inst. Tube
31 2 -6.56 -31 +30      u=7 $ Inst. Tube
32 4 -0.0001 +31       u=7 $ Outside Inst. Tube
c Array_15x15_208
40 4 -0.0001 -40 +41 -42 +43
      trcl=(0 0 5.08)   lat=1 u=6 fill=-7:7 -7:7 0:0
      9 9 9 9 9 9 9 9 9 9 9 9 9 9 9
      9 9 9 9 9 9 9 9 9 9 9 9 9 9 9
      9 9 9 9 9 8 9 9 9 8 9 9 9 9 9
      9 9 9 8 9 9 9 9 9 9 9 8 9 9 9
      9 9 9 9 9 9 9 9 9 9 9 9 9 9 9
      9 9 8 9 9 8 9 9 9 8 9 9 8 9 9
      9 9 9 9 9 9 9 9 9 9 9 9 9 9 9
      9 9 9 9 9 9 9 7 9 9 9 9 9 9 9
      9 9 9 9 9 9 9 9 9 9 9 9 9 9 9
      9 9 8 9 9 8 9 9 9 8 9 9 8 9 9
      9 9 9 9 9 9 9 9 9 9 9 9 9 9 9
      9 9 9 8 9 9 9 9 9 9 9 8 9 9 9
      9 9 9 9 9 8 9 9 9 8 9 9 9 9 9
      9 9 9 9 9 9 9 9 9 9 9 9 9 9 9
      9 9 9 9 9 9 9 9 9 9 9 9 9 9 9
c Cells - Fuel Assembly Array Inserted Into Assembly - cellPWRAssy
50 4 -0.0001 -50      fill=6 u=5 $ Array
51 4 -0.0001 -51 +50 -50.6 -50.5    u=5 $ Fuel Width Envelope
52 5 -3.9134 -51  +50.6     u=5 $ Lower Nozzle
53 6 -0.8874 -51   +50.5    u=5 $ Upper Nozzle
54 4 -0.0001 +51       u=5 $ Remaining Space
c Cell Cards - Borated Stainless Tube
311 4 -0.0001 -311      u=4 $ Space in Tube
312 14 -7.810 -312 +311 -316 +315 +314  u=4 $ Fuel Tube Top
313 14 -7.810 -312 +311 -316 +315 -313  u=4 $ Fuel Tube Bottom
314 14 -7.810 -312 +311 -314 +313 -315  u=4 $ Fuel Tube Left
315 14 -7.810 -312 +311 -314 +313 +316  u=4 $ Fuel Tube Right
316 4 -0.0001 -312 +311 #312 #313 #314 #315     u=4 $ Model Space withn Tube Box
317 4 -0.0001 +312 +311     u=4 $ Exterior Space
c Cell Cards - Disk Stack
601 7 -7.94 -604 *trcl=( 0.0000 0.0000 2.5400 )    u=3 $ Bottom weldment disk
602 7 -7.94 -601 *trcl=( 0.0000 0.0000 7.6200 )    u=3 $ Support disk 1
603 8 -2.70 -602 *trcl=( 0.0000 0.0000 15.8750 )    u=3 $ Heat transfer disk 1
604 like 602 but   *trcl=( 0.0000 0.0000 24.1300 )    u=3 $ Support disk 2
605 like 603 but   *trcl=( 0.0000 0.0000 32.3850 )    u=3 $ Heat transfer disk 2
606 like 602 but   *trcl=( 0.0000 0.0000 40.6400 )    u=3 $ Support disk 3
607 like 603 but   *trcl=( 0.0000 0.0000 48.8950 )    u=3 $ Heat transfer disk 3
608 like 602 but   *trcl=( 0.0000 0.0000 57.1500 )    u=3 $ Support disk 4
609 like 603 but   *trcl=( 0.0000 0.0000 65.4050 )    u=3 $ Heat transfer disk 4
610 like 602 but   *trcl=( 0.0000 0.0000 73.6600 )    u=3 $ Support disk 5
611 like 603 but   *trcl=( 0.0000 0.0000 81.9150 )    u=3 $ Heat transfer disk 5
612 like 602 but   *trcl=( 0.0000 0.0000 90.1700 )    u=3 $ Support disk 6
613 like 603 but   *trcl=( 0.0000 0.0000 98.4250 )    u=3 $ Heat transfer disk 6
614 like 602 but   *trcl=( 0.0000 0.0000 106.6800 )    u=3 $ Support disk 7
615 like 603 but   *trcl=( 0.0000 0.0000 114.9350 )    u=3 $ Heat transfer disk 7
616 like 602 but   *trcl=( 0.0000 0.0000 123.1900 )    u=3 $ Support disk 8
617 like 603 but   *trcl=( 0.0000 0.0000 131.4450 )    u=3 $ Heat transfer disk 8
618 like 602 but   *trcl=( 0.0000 0.0000 139.7000 )    u=3 $ Support disk 9
```

Figure 6.A.7-2 MCNP Storage Cask – UNITAD PWR 21 Assembly – Dry Exterior

```
619 like 603 but   *trcl=( 0.0000 0.0000 147.9550 )    u=3 $ Heat transfer disk 9
620 like 602 but   *trcl=( 0.0000 0.0000 156.2100 )    u=3 $ Support disk 10
621 like 603 but   *trcl=( 0.0000 0.0000 164.4650 )    u=3 $ Heat transfer disk 10
622 like 602 but   *trcl=( 0.0000 0.0000 172.7200 )    u=3 $ Support disk 11
623 like 603 but   *trcl=( 0.0000 0.0000 180.9750 )    u=3 $ Heat transfer disk 11
624 like 602 but   *trcl=( 0.0000 0.0000 189.2300 )    u=3 $ Support disk 12
625 like 603 but   *trcl=( 0.0000 0.0000 197.4850 )    u=3 $ Heat transfer disk 12
626 like 602 but   *trcl=( 0.0000 0.0000 205.7400 )    u=3 $ Support disk 13
627 like 603 but   *trcl=( 0.0000 0.0000 213.9950 )    u=3 $ Heat transfer disk 13
628 like 602 but   *trcl=( 0.0000 0.0000 222.2500 )    u=3 $ Support disk 14
629 like 603 but   *trcl=( 0.0000 0.0000 230.5050 )    u=3 $ Heat transfer disk 14
630 like 602 but   *trcl=( 0.0000 0.0000 238.7600 )    u=3 $ Support disk 15
631 like 603 but   *trcl=( 0.0000 0.0000 247.0150 )    u=3 $ Heat transfer disk 15
632 like 602 but   *trcl=( 0.0000 0.0000 255.2700 )    u=3 $ Support disk 16
633 like 603 but   *trcl=( 0.0000 0.0000 263.5250 )    u=3 $ Heat transfer disk 16
634 like 602 but   *trcl=( 0.0000 0.0000 271.7800 )    u=3 $ Support disk 17
635 like 603 but   *trcl=( 0.0000 0.0000 280.0350 )    u=3 $ Heat transfer disk 17
636 like 602 but   *trcl=( 0.0000 0.0000 288.2900 )    u=3 $ Support disk 18
637 like 603 but   *trcl=( 0.0000 0.0000 296.5450 )    u=3 $ Heat transfer disk 18
638 like 602 but   *trcl=( 0.0000 0.0000 304.8000 )    u=3 $ Support disk 19
639 like 603 but   *trcl=( 0.0000 0.0000 313.0550 )    u=3 $ Heat transfer disk 19
640 like 602 but   *trcl=( 0.0000 0.0000 321.3100 )    u=3 $ Support disk 20
641 like 603 but   *trcl=( 0.0000 0.0000 329.5650 )    u=3 $ Heat transfer disk 20
642 like 602 but   *trcl=( 0.0000 0.0000 337.8200 )    u=3 $ Support disk 21
643 like 603 but   *trcl=( 0.0000 0.0000 346.0750 )    u=3 $ Heat transfer disk 21
644 like 602 but   *trcl=( 0.0000 0.0000 354.3300 )    u=3 $ Support disk 22
645 like 603 but   *trcl=( 0.0000 0.0000 362.5850 )    u=3 $ Heat transfer disk 22
646 like 602 but   *trcl=( 0.0000 0.0000 370.8400 )    u=3 $ Support disk 23
647 like 603 but   *trcl=( 0.0000 0.0000 379.0950 )    u=3 $ Heat transfer disk 23
648 like 602 but   *trcl=( 0.0000 0.0000 387.3500 )    u=3 $ Support disk 24
649 like 603 but   *trcl=( 0.0000 0.0000 395.6050 )    u=3 $ Heat transfer disk 24
650 like 602 but   *trcl=( 0.0000 0.0000 403.8600 )    u=3 $ Support disk 25
651 like 603 but   *trcl=( 0.0000 0.0000 412.1150 )    u=3 $ Heat transfer disk 25
652 7 -7.94 -603 *trcl=( 0.0000 0.0000 420.3700 )    u=3 $ Top weldment disk
653 4 -0.0001        $ Outside Disks
      #601 #602 #603 #604 #605 #606 #607 #608 #609 #610
      #611 #612 #613 #614 #615 #616 #617 #618 #619 #620
      #621 #622 #623 #624 #625 #626 #627 #628 #629 #630
      #631 #632 #633 #634 #635 #636 #637 #638 #639 #640
      #641 #642 #643 #644 #645 #646 #647 #648 #649 #650
      #651
      #652        u=3
c Cell Cards - Basket
701 4 -0.0001 -701  #702  fill=4 ( -28.7528 56.8706 0.0000 )     $ Tube/Disk 1
            *trcl=( -28.7528 56.8706 0.0000 )    u=2
702 4 -0.0001 -51   fill=5 *trcl=( -28.0748 56.1926 0.0000 )    u=2 $ Assembly 1
703 4 -0.0001 -701  #704  fill=4 ( 0.0000 56.8706 0.0000 )     $ Tube/Disk 2
            *trcl=( 0.0000 56.8706 0.0000 )    u=2
704 4 -0.0001 -51   fill=5 *trcl=( 0.0000 56.1926 0.0000 )    u=2 $ Assembly 2
705 4 -0.0001 -701  #706  fill=4 ( 28.7528 56.8706 0.0000 )     $ Tube/Disk 3
            *trcl=( 28.7528 56.8706 0.0000 )    u=2
706 4 -0.0001 -51   fill=5 *trcl=( 28.0748 56.1926 0.0000 )    u=2 $ Assembly 3
707 4 -0.0001 -701  #708  fill=4 ( -56.8706 28.7528 0.0000 )     $ Tube/Disk 4
            *trcl=( -56.8706 28.7528 0.0000 )    u=2
708 4 -0.0001 -51   fill=5 *trcl=( -56.1926 28.0748 0.0000 )    u=2 $ Assembly 4
709 4 -0.0001 -701  #710  fill=4 ( -28.7528 28.7528 0.0000 )     $ Tube/Disk 5
            *trcl=( -28.7528 28.7528 0.0000 )    u=2
710 4 -0.0001 -51   fill=5 *trcl=( -28.0748 28.0748 0.0000 )    u=2 $ Assembly 5
711 4 -0.0001 -701  #712  fill=4 ( 0.0000 28.7528 0.0000 )     $ Tube/Disk 6
            *trcl=( 0.0000 28.7528 0.0000 )    u=2
712 4 -0.0001 -51   fill=5 *trcl=( 0.0000 28.0748 0.0000 )    u=2 $ Assembly 6
713 4 -0.0001 -701  #714  fill=4 ( 28.7528 28.7528 0.0000 )     $ Tube/Disk 7
            *trcl=( 28.7528 28.7528 0.0000 )    u=2
714 4 -0.0001 -51   fill=5 *trcl=( 28.0748 28.0748 0.0000 )    u=2 $ Assembly 7
715 4 -0.0001 -701  #716  fill=4 ( 56.8706 28.7528 0.0000 )     $ Tube/Disk 8
```

Figure 6.A.7-2 MCNP Storage Cask – UNITAD PWR 21 Assembly – Dry Exterior

```
            *trcl=( 56.8706 28.7528 0.0000 )    u=2
716 4 -0.0001 -51   fill=5 *trcl=( 56.1926 28.0748 0.0000 )    u=2 $ Assembly 8
717 4 -0.0001 -701  #718  fill=4 ( -56.8706 0.0000 0.0000 )     $ Tube/Disk 9
            *trcl=( -56.8706 0.0000 0.0000 )    u=2
718 4 -0.0001 -51   fill=5 *trcl=( -56.1926 0.0000 0.0000 )    u=2 $ Assembly 9
719 4 -0.0001 -701  #720  fill=4 ( -28.7528 0.0000 0.0000 )     $ Tube/Disk 10
            *trcl=( -28.7528 0.0000 0.0000 )    u=2
720 4 -0.0001 -51   fill=5 *trcl=( -28.0748 0.0000 0.0000 )    u=2 $ Assembly 10
721 4 -0.0001 -701  #722  fill=4 ( 0.0000 0.0000 0.0000 )     $ Tube/Disk 11
            *trcl=( 0.0000 0.0000 0.0000 )    u=2
722 4 -0.0001 -51   fill=5 *trcl=( 0.0000 0.0000 0.0000 )    u=2 $ Assembly 11
723 4 -0.0001 -701  #724  fill=4 ( 28.7528 0.0000 0.0000 )     $ Tube/Disk 12
            *trcl=( 28.7528 0.0000 0.0000 )    u=2
724 4 -0.0001 -51   fill=5 *trcl=( 28.0748 0.0000 0.0000 )    u=2 $ Assembly 12
725 4 -0.0001 -701  #726  fill=4 ( 56.8706 0.0000 0.0000 )     $ Tube/Disk 13
            *trcl=( 56.8706 0.0000 0.0000 )    u=2
726 4 -0.0001 -51   fill=5 *trcl=( 56.1926 0.0000 0.0000 )    u=2 $ Assembly 13
727 4 -0.0001 -701  #728  fill=4 ( -56.8706 -28.7528 0.0000 )     $ Tube/Disk 14
            *trcl=( -56.8706 -28.7528 0.0000 )    u=2
728 4 -0.0001 -51   fill=5 *trcl=( -56.1926 -28.0748 0.0000 )    u=2 $ Assembly 14
729 4 -0.0001 -701  #730  fill=4 ( -28.7528 -28.7528 0.0000 )     $ Tube/Disk 15
            *trcl=( -28.7528 -28.7528 0.0000 )    u=2
730 4 -0.0001 -51   fill=5 *trcl=( -28.0748 -28.0748 0.0000 )    u=2 $ Assembly 15
731 4 -0.0001 -701  #732  fill=4 ( 0.0000 -28.7528 0.0000 )     $ Tube/Disk 16
            *trcl=( 0.0000 -28.7528 0.0000 )    u=2
732 4 -0.0001 -51   fill=5 *trcl=( 0.0000 -28.0748 0.0000 )    u=2 $ Assembly 16
733 4 -0.0001 -701  #734  fill=4 ( 28.7528 -28.7528 0.0000 )     $ Tube/Disk 17
            *trcl=( 28.7528 -28.7528 0.0000 )    u=2
734 4 -0.0001 -51   fill=5 *trcl=( 28.0748 -28.0748 0.0000 )    u=2 $ Assembly 17
735 4 -0.0001 -701  #736  fill=4 ( 56.8706 -28.7528 0.0000 )     $ Tube/Disk 18
            *trcl=( 56.8706 -28.7528 0.0000 )    u=2
736 4 -0.0001 -51   fill=5 *trcl=( 56.1926 -28.0748 0.0000 )    u=2 $ Assembly 18
737 4 -0.0001 -701  #738  fill=4 ( -28.7528 -56.8706 0.0000 )     $ Tube/Disk 19
            *trcl=( -28.7528 -56.8706 0.0000 )    u=2
738 4 -0.0001 -51   fill=5 *trcl=( -28.0748 -56.1926 0.0000 )    u=2 $ Assembly 19
739 4 -0.0001 -701  #740  fill=4 ( 0.0000 -56.8706 0.0000 )     $ Tube/Disk 20
            *trcl=( 0.0000 -56.8706 0.0000 )    u=2
740 4 -0.0001 -51   fill=5 *trcl=( 0.0000 -56.1926 0.0000 )    u=2 $ Assembly 20
741 4 -0.0001 -701  #742  fill=4 ( 28.7528 -56.8706 0.0000 )     $ Tube/Disk 21
            *trcl=( 28.7528 -56.8706 0.0000 )    u=2
742 4 -0.0001 -51   fill=5 *trcl=( 28.0748 -56.1926 0.0000 )    u=2 $ Assembly 21
743 4 -0.0001          $ Canister Cavity
      #701 #703 #705 #707 #709 #711 #713 #715 #717 #719
      #721 #723 #725 #727 #729 #731 #733 #735 #737 #739 #741
      #702 #704 #706 #708 #710 #712 #714 #716 #718 #720
      #722 #724 #726 #728 #730 #732 #734 #736 #738 #740 #742
          fill=3      u=2
c Cell Cards - Canister
801 4 -0.0001 -801     fill=2 u=1 $ Cavity
802 7 -7.940 -802 +801     u=1 $ Canister Shell / Lid / Bottom
803 13 -0.0001 +802      u=1 $ Remaining Space
C VCC Cells
811 9 -7.8212 -811        $ Pedestal plate
812 9 -7.8212 -812 +813       $ Stand
813 9 -7.8212 -818 +819 +826 +827     $ Bottom plate outer
814 9 -7.8212 (-819 +820 -814) : (-819 +820 -815)      $ Bottom plate connector
815 9 -7.8212 -820        $ Bottom plate inner
816 9 -7.8212 (-813 -836 +837 -822) : (-813 -834 +835 +836 -822)        $ Support rail inside
stand
817 9 -7.8212 (+812 -836 +837 -822) : (+812 -834 +835 +836 -822)        $ Support rail outside
stand
818 9 -7.8212 (-831 +833 +814 +815 -823) :
              (-832 +833 +814 +815 -823 +831)        $ Air inlet top
819 9 -7.8212 (-828 +826 +830 -823 +814 +815 +818) :
              (-829 +827 +830 -823 +814 +815 +818)        $ Air inlet wall
```

Figure 6.A.7-2 MCNP Storage Cask – UNITAD PWR 21 Assembly – Dry Exterior

```
820 9 -7.8212 (-814 +816 +812 -823 +818) : (-815 +817 +812 -823 +818)        $ Air inlet angular
wall
821 9 -7.8212 (-830 -828 +826 +814 +815 +827 +818) :
              (-830 -829 +827 +814 +815 +826 +818)        $ Air inlet remaining wall
822 12 -2.3220 -823 +821 +824 -825        $ Concrete
823 12 -2.3220 -823 +821 +814 +815 +818 +831 +832 +828 +829 -824        $ Concrete lower
824 12 -2.3220 -823 +821 +838 +845 +846 +825        $ Concrete upper
825 9 -7.8212 -821 +822 -825      $ Liner
826 9 -7.8212 -821 +822 +825 +845 +846    $ Liner upper
827 9 -7.8212 -838 +839       $ Top flange
828 9 -7.8212 -840        $ Lid top
829 9 -7.8212 -841 +842       $ Lid shell
830 12 -2.3220 -842        $ Lid concrete
831 9 -7.8212 +822 -845 +843 -823 +846    $ Outlet steel x
832 9 -7.8212 +822 -846 +844 -823     $ Outlet steel y
833 13 -0.0001 (-818 +819 -826) : (-818 +819 -827)        $ Bottom plate outer void
834 13 -0.0001 -819 +820 +814 +815     $ Bottom plate connector void
835 13 -0.0001 (-813 -837 -822) : (-813 -835 +836 -822)        $ Support rail inside stand void
836 13 -0.0001 (+812 -837 -822) : (+812 -835 +836 -822)        $ Support rail outside stand void
837 13 -0.0001 (-826 +812 +814 +815 -823 +818) :
               (-827 +812 +814 +815 -823 +818 +826)        $ Air inlet void
838 13 -0.0001 -833 +812 +814 +815        $ Air inlet top void
839 13 -0.0001 (-816 +818 +812) : (-817 +818 +812)        $ Connector void
840 13 -0.0001 -813 +834 +836        $ Stand void
841 13 -0.0001 -822 +811 +812 +834 +836 +838 +841
                   fill=1 ( 0.0000 0.0000 5.0800 )     $ Cavity
842 13 -0.0001 +822 -843 -823      $ Outlet void x
843 13 -0.0001 +822 -844 -823      $ Outlet void y
844 13 -0.0001 -838 -839 +841      $ Flange / lid void
845 13 -0.0001 -847 +823 +840      $ Exterior to Refl. Boundary
846 0         +847        $ Exterior to Refl. Boundary

c Surfaces - Fuel Rod - BW15H4 - B&W Core - 15x15
10 RCC 0.0000 0.0000 11.5888 0.0000 0.0000 365.7600 0.4600 $ Fuel pellet stack
11 RCC 0.0000 0.0000 0.2540 0.0000 0.0000 388.4295 0.4699 $ Annulus + Plenum
12 RCC 0.0000 0.0000 0.0000 0.0000 0.0000 388.9375 0.5258 $ Clad + End-Caps
c Surfaces - Guide Tube - BW15H4 - B&W Core - 15x15
20 CZ 0.5906       $ Guide tube inner surface
21 CZ 0.6261       $ Guide tube outer surface
c Surfaces - Instrument Tube - BW15H4 - B&W Core - 15x15
30 CZ 0.5906       $ Inst tube inner surface
31 CZ 0.6261       $ Inst tube outer surface
c Surfaces - Pitch - BW15H4 - B&W Core - 15x15
40 PX 0.7214       $ Lattice Cell Boundaries
41 PX -0.7214
42 PY 0.7214
43 PY -0.7214
c Surfaces - Fuel Assembly Array Inserted Into Assembly - BW15H4 - B&W Core - 15x15
50 RPP -10.6247 10.6247 -10.6247 10.6247 5.0800 395.6050  $ Array
51 RPP -10.9931 10.9931 -10.9931 10.9931 0.0000 420.6875  $ Assembly Outer Dims
c Surface Cards - Borated Stainless Tube
311 RPP -11.6713 11.6713 -11.6713 11.6713 0.0000 440.0804 $  Space inside tube - cavity extent
312 RPP -12.7889 12.7889 -12.7889 12.7889 5.0800 419.1000 $  Fuel tube body
313 PY -11.1886      $ Absorber Cut Plane
314 PY 11.1886      $ Absorber Cut Plane
315 PX -11.1886      $ Absorber Cut Plane
316 PX 11.1886      $ Absorber Cut Plane
c Surface Cards - Disk Stack
601 RCC 0.0000 0.0000 0.0000 0.0000 0.0000 2.5400 82.8675 $ Structural disk
602 RCC 0.0000 0.0000 0.0000 0.0000 0.0000 2.5400 82.5500 $ Heat transfer disk
603 RCC 0.0000 0.0000 0.0000 0.0000 0.0000 1.9050 82.8675 $ Top weldment disk
604 RCC 0.0000 0.0000 0.0000 0.0000 0.0000 2.5400 82.8675 $ Bottom weldment disk
c Surface Cards - Basket
701 RPP -12.7889 12.7889 -12.7889 12.7889 0.0000 440.0804  $ Structural disk opening
c Surface Cards - Canister
```

Figure 6.A.7-2 MCNP Storage Cask – UNITAD PWR 21 Assembly – Dry Exterior

```
801 RCC 0.0000 0.0000 0.0000 0.0000 0.0000 440.0804  83.1850 $ Canister cavity
802 RCC 0.0000 0.0000 -5.0800 0.0000 0.0000 465.1502  84.4550 $ Canister
C VCC Surfaces
811  RCC 0.0000 0.0000 -5.0800 0.0000 0.0000 5.0800 84.4549  $ Pedestal plate
812  RCC 0.0000 0.0000 -30.4800 0.0000 0.0000 25.4000 63.5000  $ Stand outer
813  RCC 0.0000 0.0000 -30.4800 0.0000 0.0000 25.4000 62.3888  $ Stand inner
814 1 RPP -100.3300 100.3300 -10.4775 10.4775 -33.0200 -16.5100   $ Connector plate A
815 2 RPP -100.3300 100.3300 -10.4775 10.4775 -33.0200 -16.5100   $ Connector plate B
816 1 RPP -99.0600 99.0600 -9.2075 9.2075 -33.0200 -16.5100   $ Air inlet angled wall A
817 2 RPP -99.0600 99.0600 -9.2075 9.2075 -33.0200 -16.5100   $ Air inlet angled wall B
818  RCC 0.0000 0.0000 -33.0200 0.0000 0.0000 2.5400 172.7200  $ Bottom plate outer
819  RCC 0.0000 0.0000 -33.0200 0.0000 0.0000 2.5400 100.3300  $ Connector radius
820  RCC 0.0000 0.0000 -33.0200 0.0000 0.0000 2.5400 63.5000  $ Bottom plate inner
821  RCC 0.0000 0.0000 -16.5100 0.0000 0.0000 530.8600 101.6000  $ VCC liner outer
822  RCC 0.0000 0.0000 -16.5100 0.0000 0.0000 530.8600 93.9800  $ VCC liner inner
823  RCC 0.0000 0.0000 -33.0200 0.0000 0.0000 549.9100 172.7200  $ Concrete
824  PZ -16.5099        $ Lower concrete
825  PZ 488.4419        $ Upper concrete
826  RPP -172.7200 172.7200 -63.5000 63.5000 -33.0200 -21.5900   $ Air inlet void X
827  RPP -63.5000 63.5000 -172.7200 172.7200 -33.0200 -21.5900   $ Air inlet void Y
828  RPP -172.7200 172.7200 -64.7700 64.7700 -33.0200 -21.5900   $ Air inlet wall X
829  RPP -64.7700 64.7700 -172.7200 172.7200 -33.0200 -21.5900   $ Air inlet wall Y
830  RCC 0.0000 0.0000 -33.0200 0.0000 0.0000 11.4300 100.3300  $ Air inlet divider
831  RPP -172.7200 172.7200 -64.7700 64.7700 -21.5900 -16.5100   $ Air inlet top X
832  RPP -64.7700 64.7700 -172.7200 172.7200 -21.5900 -16.5100   $ Air inlet top Y
833  RCC 0.0000 0.0000 -21.5900 0.0000 0.0000 5.0800 86.8680  $ Air inlet top plate radius
834  RPP -106.6800 106.6800 -5.7150 5.7150 -16.5100 -5.0800   $ Support rail exterior X
835  RPP -106.6800 106.6800 -4.4450 4.4450 -16.5100 -5.0800   $ Support rail interior X
836  RPP -5.7150 5.7150 -106.6800 106.6800 -16.5100 -5.0800   $ Support rail exterior Y
837  RPP -4.4450 4.4450 -106.6800 106.6800 -16.5100 -5.0800   $ Support rail interior Y
838  RCC 0.0000 0.0000 514.3500 0.0000 0.0000 2.5400 108.5850  $ Top flange
839  CZ 97.1550        $ Top flange ID
840  RCC 0.0000 0.0000 516.8900 0.0000 0.0000 1.9050 108.5850  $ Lid top
841  RCC 0.0000 0.0000 501.5230 0.0000 0.0000 15.3670 90.1700  $ Lid shell
842  RCC 0.0000 0.0000 502.1580 0.0000 0.0000 14.7320 89.5350  $ Lid concrete
843  RPP -172.7200 172.7200 -63.5000 63.5000 489.0770 499.2370   $ Air outlet void X
844  RPP -63.5000 63.5000 -172.7200 172.7200 489.0770 499.2370   $ Air outlet void Y
845  RPP -172.7200 172.7200 -64.7700 64.7700 488.4420 499.8720   $ Air outlet steel X
846  RPP -64.7700 64.7700 -172.7200 172.7200 488.4420 499.8720   $ Air outlet steel Y
*847  RCC 0.0000 0.0000 -33.5200 0.0000 0.0000 552.8150 173.2200  $ Reflecting Storage Boundary

c
c Materials List
c
c Fuel Pellet Material   5.00%  Weight UO2 [amu]  269.90
m1    92235.66c -4.407E-02 92238.66c -8.374E-01  8016.62c -1.186E-01
c Zirc Alloy
m2    26054.62c -7.063E-05 24050.62c -4.179E-05  7014.62c -4.980E-04
      26056.62c -1.149E-03 24052.62c -8.370E-04  7015.66c -1.981E-06
      26057.62c -2.702E-05 24053.62c -9.673E-05
      26058.62c -3.631E-06 24054.62c -2.448E-05
      40000.66c -9.823E-01 50000.42c -1.500E-02
c Clad Gap Water (Always Unborated)
m3     1001.62c -1.119E-01  8016.62c -8.881E-01
mt4  lwtr.01t
c Cask Cavity Water (May be Borated)
m4     1001.62c -1.119E-01  8016.62c -8.881E-01
c Lower Nozzle Material
m5
       1001.62c -1.450E-06  8016.62c -1.151E-05
      24050.62c -7.939E-03 26054.62c -3.927E-02 28058.62c -6.384E-02
      24052.62c -1.590E-01 26056.62c -6.387E-01 28060.62c -2.543E-02
      24053.62c -1.838E-02 26057.62c -1.502E-02 28061.62c -1.124E-03
      24054.62c -4.651E-03 26058.62c -2.019E-03 28062.62c -3.639E-03
                                                28064.62c -9.623E-04
```

Figure 6.A.7-2 MCNP Storage Cask – UNITAD PWR 21 Assembly – Dry Exterior

```
      25055.62c -2.000E-02
mt5  lwtr.01t
c Upper Nozzle Material
m6
       1001.62c -1.120E-05  8016.62c -8.888E-05
      24050.62c -7.938E-03 26054.62c -3.927E-02 28058.62c -6.383E-02
      24052.62c -1.590E-01 26056.62c -6.386E-01 28060.62c -2.543E-02
      24053.62c -1.838E-02 26057.62c -1.502E-02 28061.62c -1.124E-03
      24054.62c -4.651E-03 26058.62c -2.019E-03 28062.62c -3.638E-03
                                                28064.62c -9.622E-04
      25055.62c -2.000E-02
mt6  lwtr.01t
c SS304
m7    24050.62c -7.939E-03 26054.62c -3.927E-02 28058.62c -6.384E-02
      24052.62c -1.590E-01 26056.62c -6.387E-01 28060.62c -2.543E-02
      24053.62c -1.838E-02 26057.62c -1.502E-02 28061.62c -1.124E-03
      24054.62c -4.652E-03 26058.62c -2.019E-03 28062.62c -3.639E-03
                                                28064.62c -9.623E-04
      25055.62c -2.000E-02
c Aluminum
m8    13027.62c -1.000E+00
c Carbon Steel
m9    26054.62c -5.594E-02  6000.66c -1.000E-02
      26056.62c -9.098E-01
      26057.62c -2.140E-02
      26058.62c -2.876E-03
c Lead
m10   82206.66c -2.534E-01
      82207.66c -2.207E-01
      82208.66c -5.259E-01
c NS-F-FR
m11    5010.66c -9.313E-04  7014.62c -1.974E-02  8016.62c -4.250E-01
       5011.66c -3.772E-03  7015.66c -7.852E-05
      13027.62c -2.142E-01  1001.62c -6.001E-02  6000.66c -2.763E-01
c Concrete
m12   26054.62c -7.911E-04 14000.60c -3.370E-01
      26056.62c -1.287E-02
      26057.62c -3.026E-04
      26058.62c -4.067E-05
       1001.62c -1.000E-02 13027.62c -3.400E-02 20000.62c -4.400E-02
       8016.62c -5.320E-01 11023.62c -2.900E-02
c Water Exterior
m13    1001.62c 2.0
       8016.62c 1.0
mt13  lwtr.01t
c Borated Stainless Steel
m14    5010.66c -1.750E-03  5011.66c -9.056E-03
      24050.62c -7.852E-03 26054.62c -3.884E-02 28058.62c -6.314E-02
      24052.62c -1.573E-01 26056.62c -6.317E-01 28060.62c -2.515E-02
      24053.62c -1.818E-02 26057.62c -1.486E-02 28061.62c -1.112E-03
      24054.62c -4.600E-03 26058.62c -1.997E-03 28062.62c -3.599E-03
                                                28064.62c -9.517E-04
      25055.62c -1.978E-02
c SS304/Cu Heat Fin
m15   24050.62c -4.537E-03 26054.62c -2.244E-02 28058.62c -3.648E-02
      24052.62c -9.088E-02 26056.62c -3.650E-01 28060.62c -1.453E-02
      24053.62c -1.050E-02 26057.62c -8.584E-03 28061.62c -6.425E-04
      24054.62c -2.658E-03 26058.62c -1.154E-03 28062.62c -2.079E-03
                                                28064.62c -5.499E-04
      25055.62c -1.143E-02
      29000 -0.4286
c
c Rotation Matrix
*TR1 0.0 0.0 0.0 45 135 90 -45 45 90 90 90 0  $ z-rotation 45 degrees
*TR2 0.0 0.0 0.0 135 225 90 45 135 90 90 90 0  $ z-rotation 135 degrees
```

Figure 6.A.7-2 MCNP Storage Cask – UNITAD PWR 21 Assembly – Dry Exterior

```
*TR3 0.0 0.0 0.0 15 105 90 -75 15 90 90 90 0  $ z-rotation 15 degrees
*TR4 0.0 0.0 0.0 30 120 90 -60 30 90 90 90 0  $ z-rotation 30 degrees
*TR5 0.0 0.0 0.0 60 150 90 -30 60 90 90 90 0  $ z-rotation 60 degrees
*TR6 0.0 0.0 0.0 75 165 90 -15 75 90 90 90 0  $ z-rotation 75 degrees
*TR7 0.0 0.0 0.0 8 98 90 -82 8 90 90 90 0  $ z-rotation 8 degrees
*TR8 0.0 0.0 0.0 102 192 90 12 102 90 90 90 0  $ z-rotation 102 degrees
*TR9 0.0 0.0 0.0 156 246 90 66 156 90 90 90 0  $ z-rotation 156 degrees
*TR10 0.0 0.0 0.0 78 168 90 -12 78 90 90 90 0  $ z-rotation 78 degrees
*TR11 0.0 0.0 0.0 24 114 90 -66 24 90 90 90 0  $ z-rotation 24 degrees
c
c Cell Importances
c
mode n
imp:n 1 156r 0
c
c
c Criticality Controls
c
kcode 500 1.00 30 1030
c Ones source point in each of the fuel assemblies
ksrc
      -25.1894 59.0780 100.00
      2.8854 59.0780 100.00
      30.9602 59.0780 100.00
      -53.3072 30.9602 100.00
      -25.1894 30.9602 100.00
      2.8854 30.9602 100.00
      30.9602 30.9602 100.00
      59.0780 30.9602 100.00
      -53.3072 2.8854 100.00
      -25.1894 2.8854 100.00
      2.8854 2.8854 100.00
      30.9602 2.8854 100.00
      59.0780 2.8854 100.00
      -53.3072 -25.1894 100.00
      -25.1894 -25.1894 100.00
      2.8854 -25.1894 100.00
      30.9602 -25.1894 100.00
      59.0780 -25.1894 100.00
      -25.1894 -53.3072 100.00
      2.8854 -53.3072 100.00
      30.9602 -53.3072 100.00
c
c
c Random Number Generator Controls
c
RAND GEN=2 SEED=19073486328127
c
```

Table of Contents

7.0 CONFINEMENT 7.1-1

7.1 Confinement Boundary 7.1-1
7.1.1 Confinement Vessel 7.1-1
7.1.1.1 Design Documents, Codes and Standards 7.1-3
7.1.1.2 Technical Requirements for the Canister 7.1-3
7.1.1.3 Release Rate 7.1-4
7.1.2 Confinement Penetrations 7.1-4
7.1.3 Seals and Welds 7.1-5
7.1.3.1 Fabrication 7.1-5
7.1.3.2 Welding Specifications 7.1-5
7.1.3.3 Testing, Inspection, and Examination 7.1-6
7.1.4 Closure 7.1-6

7.2 Requirements for Normal Conditions of Storage 7.2-1
7.2.1 Release of Radioactive Material 7.2-1
7.2.2 Pressurization of Confinement Vessel 7.2-1

7.3 Confinement Requirements for Hypothetical Accident Conditions 7.3-1

7.4 Confinement Evaluation for Site Specific Spent Fuel 7.4-1
7.4.1 Confinement Evaluation for Maine Yankee Site Specific Spent Fuel 7.4-1

7.5 References 7.5-1

Appendix 7.A CONFINEMENT
UNITAD Storage System 7.A-i

List of Figures

Figure 7.1-1 Transportable Storage Canister Primary and Secondary Confinement Boundaries 7.1-7
Figure 7.1-2 Confinement Boundary Detail at Shield Lid Penetration 7.1-8

List of Tables

Table 7.1-1 Canister Confinement Boundary Welds 7.1-9

Appendix 7.A CONFINEMENT
UNITAD Storage System

Table of Contents 7.A-i
List of Figures 7.A-ii
List of Tables 7.A-ii

7.A CONFINEMENT 7.A-1

7.A.1 Confinement Boundary 7.A.1-1
7.A.1.1 Confinement Vessel 7.A.1-1
7.A.1.2 Confinement Penetrations 7.A.1-3
7.A.1.3 Seals and Welds 7.A.1-3
7.A.1.4 Closure 7.A.1-4

7.A.2 Confinement Requirements for Normal Conditions of Storage 7.A.2-1

7.A.3 Confinement Requirements for Hypothetical Accident Conditions 7.A.3-1

7.A.4 References 7.A.4-1

List of Figures

Figure 7.A.1-1 Canister Confinement Boundary 7.A.1-5

List of Tables

Table 7.A.1-1 Canister Confinement Boundary Welds 7.A.1-6

7.A CONFINEMENT

The UNITAD Storage System Canister provides confinement for its radioactive contents in long-term storage. The confinement boundary provided by the Canister is closed by welding, creating a solid barrier to the release of contents in the design basis normal conditions and off-normal or accident events. The welds are visually inspected and nondestructively examined to verify integrity. The Canister vessel and inner port covers are helium leak tested to leaktight criteria in accordance with ANSI N14.5-1997 [9].

The sealed Canister contains helium, an inert gas. The confinement boundary retains the helium and also prevents entry of outside air into the Canister in long-term storage. The exclusion of air from the confinement boundary precludes fuel rod cladding oxidation failures during storage.

The Canister confinement system meets the requirements of 10 CFR 72.24 for protection of the public from release of radioactive material. The design of the Canister allows the recovery of stored spent fuel should it become necessary per the requirements of 10 CFR 72.122. The TSC meets the requirements of 10 CFR 72.122 (h) for protection of the spent fuel contents in long-term storage such that future handling of the contents would not pose an operational safety concern.

The UNITAD Canister provides an austenitic stainless steel closure design sealed by welding, precluding the need for continuous monitoring. The analysis for normal conditions and off-normal or accident events demonstrates that the integrity of the confinement boundary is maintained in all the evaluated conditions. Consequently, there is no release of radionuclides from the Canister resulting in site boundary doses in excess of regulatory requirements. Therefore, the confinement design of the UNITAD Storage System meets the regulatory requirements of 10 CFR 72 and the acceptance criteria defined in NUREG-1536.

THIS PAGE INTENTIONALLY LEFT BLANK

7.A.1 Confinement Boundary

The welded Canister is the confinement vessel for the UNITAD Storage System spent fuel assembly contents. The primary confinement boundary of the Canister consists of the Canister shell, bottom plate, closure lid, the inner port covers, and the welds that join these components. A secondary closure of the confinement boundary welds consists of the closure ring and the outer port covers and the welds that join the outer port covers to the closure lid and the closure ring to the closure lid and the Canister shell. The UNITAD Canister confinement boundary is shown in Figure 7.A.1-1. The confinement boundary does not incorporate bolted closures or mechanical seals. The confinement boundary welds are described in Table 7.A.1-1.

7.A.1.1 Confinement Vessel

The Canister consists of five principal components: the shell, the bottom plate, the closure lid, the closure ring and the port covers. The shell is a right-circular cylinder constructed of thick rolled Type 304 stainless steel plate. The edges of the rolled plate are joined using full-penetration welds. The Canister is closed at the bottom end by a thick circular plate joined to the shell by a full-penetration weld. The Canister shell is helium leak tested following fabrication.

After loading, the Canister is closed at the top by a closure lid fabricated from Type 304 stainless steel. It is joined to the Canister shell using a field-installed groove weld. The closure lid-to-Canister shell weld is analyzed, installed and examined in accordance with Interim Staff Guidance (ISG)-15 [1] guidance. This closure lid-to-Canister shell weld is a partial penetration weld progressively examined at the root, midplane and final surface by dye penetrant (PT) examination. Following NDE of the closure lid-to-Canister shell weld, the Canister cavity is reflooded and the Canister vessel is hydrostatically pressure tested as described in the Operating Procedures of Appendix 8.A and the Acceptance Test Program of Appendix 9.A. The acceptance criterion for the test is no leakage following the minimum 10-minute test duration.

After successful completion of the hydrostatic pressure test, the Type 304 stainless steel closure ring is installed in the Canister-to-closure lid weld groove and welded to both the closure lid and the Canister shell. The closure ring welds are inspected by PT examination of the final weld surfaces. The closure ring provides the double-weld redundant sealing of the confinement boundary, as required by 10 CFR 72.236(e).

The closure lid incorporates drain and vent penetrations, which provide access to the Canister cavity for canister draining, drying and helium backfilling operations during Canister closure prior to placement into storage. The design of the penetrations incorporates features to provide adequate shielding for the operators during these operations and closure welding.

Following final helium backfill, the vent and drain port penetrations are closed with Type 304 stainless steel inner port covers that are partial-penetration welded in place. Each inner port cover weld is helium leak tested. Each inner port cover weld final surface is then PT examined. A second (outer) port cover is then installed and welded to the closure lid at each of the ports to provide the double-weld redundant sealing of the confinement boundary. The outer port cover weld final surfaces are inspected by PT examination.

Prior to sealing, the Canister cavity is backfilled with helium. The minimum helium purity level of 99.995% (minimum) specified in the Operating Procedures (Appendix 8.A) maintains the quantity of oxidizing contaminants to less than one mole per canister for all loading conditions. Based on the Canister free volume of 7,000 liters, the Canister would contain approximately 300 moles of gases. Conservatively, assuming that all of the impurities in the helium are oxidants, a maximum of less than 0.1 mole of oxidants could exist in the canister during storage. By limiting the amount of oxidants to less than one mole, the recommended limits for preventing cladding degradation found in the PNL-6365 [2] are satisfied. The maintenance of a positive helium pressure (e.g., atmospheric or greater) eliminates any potential for in-leakage of air into the Canister cavity during storage operations.

The closure lid weld completed in the field is not helium leakage tested. ISG-18 [3] provides that an acceptable confinement boundary is established for stainless steel spent fuel storage canisters that are closed using a closure weld that meets the guidance of ISG-15 [1]. The Canister closure weld meets the ISG-15 guidance in that the analysis of the weld considers a stress reduction factor of 0.8, the weld is qualified and performed in accordance with the ASME Code, Section IX requirements; and the weld is dye penetrant (PT) examined after the root, midplane and final surface passes. The final surfaces of the welds joining the closure ring to the closure lid and shell, and joining the redundant port covers to the closure lid, are PT examined. The inner port cover welds are helium leakage tested as defined in Appendix 9.A.

During fabrication, the Canister shell and bottom plate welds are volumetrically inspected and the shell assembly is shop helium leakage tested to the leaktight criteria of 1×10^{-7} ref cm^3/sec, or 2×10^{-7} cm^3/sec (helium), in accordance with ANSI N14.5 using the evacuated envelope test method. A minimum test sensitivity of 1×10^{-7} cm^3/sec (helium) is required.

The loaded Canister is considered and analyzed as having no credible leakage based on: the shop helium leakage testing of the Canister shell, bottom plate and the joining welds; the design analyses and qualifications of the closure lid and port cover welds; the performance of a field hydrostatic pressure test of the closure lid-to-Canister shell weld; the helium leakage test performed on the inner vent and drain port covers; and the multiple NDE performed on all of the confinement boundary welds.

The confinement boundary details at the top of the Canister are shown in Figure 7.A.1-1. The closure is welded by qualified welders using weld procedures certified in accordance with ASME Code, Section IX. Over its 100+ year design life, the Canister precludes the release of radioactive contents to the environment and the entry of air or water that could potentially damage the cladding of the stored spent fuel.

7.A.1.2 Confinement Penetrations

Two penetrations fitted with quick-disconnect fittings are provided in the Canister closure lid for operational functions during system loading and sealing operations. The drain port accesses a drain tube that extends into a sump located in the bottom plate. The vent port extends to the underside of the closure lid and accesses the top of the Canister cavity.

After the completion of the closure lid-to-Canister shell weld, Canister pressure test, closure ring welding and cavity draining, the vent and drain penetrations are utilized for drying the Canister internals and contents and for helium backfilling and pressurizing the Canister. After backfilling with helium, both penetrations are closed with redundant port covers welded to the closure lid. As presented for storage, the Canister has no exposed or accessible penetrations and uses no mechanical closures or seals to maintain confinement.

7.A.1.3 Seals and Welds

The confinement boundary welds consist of the field-installed welds that close and seal the Canister, the shop welds that join the bottom plate to the Canister, and the shop welds that join the rolled plates forming the Canister shell. The Canister shell may incorporate both longitudinal and circumferential weld seams in joining the rolled plates. No elastomer or metallic seals are used in the confinement boundary of the Canister.

All cutting, machining, welding and forming of the Canister vessel are performed in accordance with Section III, Article NB-4000 of the ASME Code, unless otherwise specified in the approved fabrication drawings and specifications. Code alternatives are listed in Table 2.A.2-2.

Weld procedures, welders, and welding machine operators shall be qualified in accordance with ASME Code, Section IX. Refer to Appendix 9.A for the acceptance criteria for the Canister weld visual inspections and nondestructive examinations (NDE).

The loaded TSC is closed using field-installed welds. The closure lid to Canister shell weld is dye penetrant (PT) examined at the root, at the midplane level and the final surface. After the completion of Canister hydrostatic pressure testing, the closure ring is installed and welded to the Canister shell and closure lid. The final surface of each of the closure ring welds is PT examined. Following draining, drying, and helium backfilling operations, the vent and drain ports are closed with redundant port covers that are welded in place. The inner port cover welds are helium leakage tested. The final surface of each port cover to closure lid weld is PT examined.

Shop and field examinations of Canister confinement boundary welds are performed by personnel qualified in accordance with American Society of Nondestructive Testing Recommended Practice No. SNT-TC-1A [10]. Weld examinations are documented in written reports.

7.A.1.4 Closure

The primary closure of the UNITAD Canister consists of the welded closure lid and the two welded inner port covers. There are no bolted closures or mechanical seals in the primary closure. A secondary closure is provided at the top end of the Canister by the welded closure ring and the two welded outer port covers. There are no bolted closures or mechanical seals in the confinement boundary.

Figure 7.A.1-1 Canister Confinement Boundary

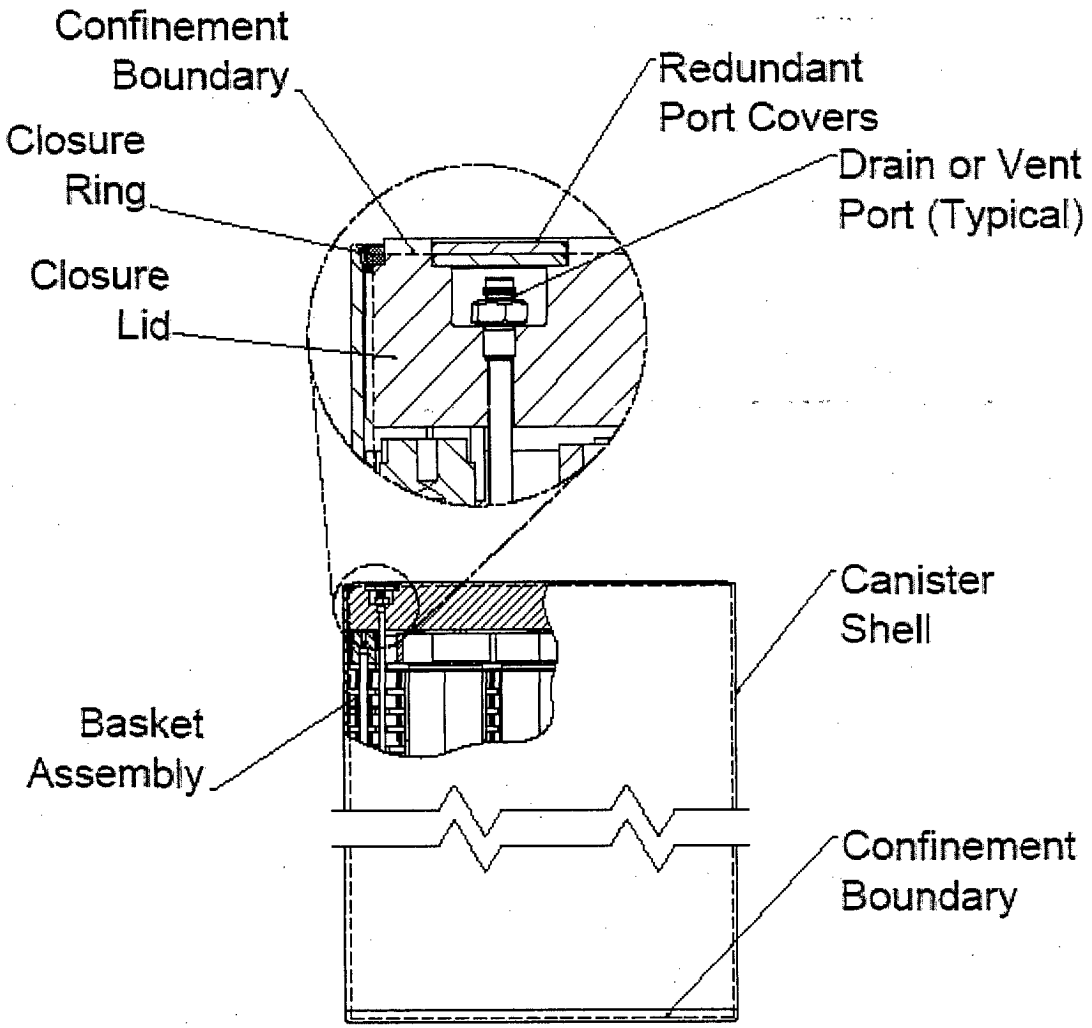

Table 7.A.1-1 Canister Confinement Boundary Welds

Weld Location	Weld Type	ASME Code Category (Section III, Subsection NB)
Shell longitudinal	Full penetration groove (shop weld)	A
Shell circumferential (if used)	Full penetration groove (shop weld)	B
Bottom plate to shell	Full penetration groove (shop weld)	C
Canister closure lid to shell	Groove (field weld)	C
Redundant vent and drain port covers to closure lid	Bevel (field weld)	C
Closure ring to Canister shell and to closure lid	Bevel (field weld)	C

7.A.2 Confinement Requirements for Normal Conditions of Storage

The UNITAD Canister is transferred to a Vertical Concrete Cask using a Transfer Cask. During this transfer, the Canister is subject to handling loads. The evaluation of the canister for normal handling loads is provided in Section 3.A.5. The principal design criteria for the UNITAD Storage System are provided in Section 2.A.

Once the Canister is placed inside the concrete cask, it is effectively protected from direct structural loading due to natural phenomena, such as wind, snow and ice loading. The principal direct loading for normal operating conditions results from increased internal pressure caused by decay heat, solar insolation and ambient temperature. Loading due to transient handling may occur during the transfer of the loaded Canister to the concrete cask.

Release of Radioactive Material

The structural analysis of the Canister for normal conditions of storage presented in Section 3.A.5 shows that the Canister is not breached in any of the normal operating events. Therefore, there is no release of radioactive material during normal conditions of storage.

Pressurization of the Confinement Vessel

The Canister is vacuum dried and backfilled with helium at one atmosphere absolute prior to installing and welding the penetration port covers. In normal service, the internal pressure increases due to an increase in temperature of the helium and due to the postulated failure of fuel rod cladding of 1% of the fuel rods, which releases 30% of the available fission gases in those rods.

The Canister, closure lid, fittings and the fuel basket are fabricated from materials that do not react with ordinary or borated spent fuel pool water to generate gases. The aluminum heat transfer disks are protected by an oxide film that forms shortly after fabrication. This oxide layer effectively precludes further oxidation of the aluminum components or other reaction with water in the canister at temperatures less than 200°F, which is higher than the typical spent fuel pool water temperature. No steels requiring protective coatings or paints are used in the Canister, closure lid, fittings or fuel basket.

Since the Canister is vacuum dried and backfilled with helium prior to sealing, no significant moisture or gases, such as air, remain in the Canister. Consequently, there is no potential that radiolytic decomposition could cause an increase in internal pressure or result in a buildup of explosive gases in the Canister.

The calculated maximum normal condition pressure is less than the pressure applied in the structural evaluations (Section 3.A.5). There are no adverse consequences due to the internal pressure resulting from normal storage conditions.

Since the containment boundary is closed by welding and contains no seals or O-rings, and since the boundary is not ruptured or otherwise compromised in normal handling events, no leakage of contents occurs in normal conditions.

7.A.3 Confinement Requirements for Hypothetical Accident Conditions

The results of the structural analyses of the Canister for off-normal and accident events of storage, presented in the NAC-UMS® Storage System FSAR, Chapter 11, show that the Canister is not breached in any of the evaluated events. Consequently, based on the welded closure Canister confinement boundary and the leakage tests described in Section 9.A.2, the TSC has no credible leakage and, therefore, there is no release of radioactive material during off-normal or accident events of storage.

For evaluation purposes, a class of events identified as off-normal is also considered in FSAR Section 11.A.1. The off-normal class of events is not considered here, since off-normal conditions are bounded by the hypothetical accident conditions.

The structural analyses of the Canister for off-normal and accident conditions of storage, presented in FSAR Chapter 11, show that the Canister is not breached in any of the evaluated events. Consequently, there is no credible leakage of radioactive material from the confinement boundary during off-normal or accident conditions of storage.

The resulting site boundary dose due to a hypothetical accident is, therefore, less than the 5 rem whole body or organ (including skin) dose at the 100-meter minimum boundary required by 10 CFR 72.106 (b) for accident exposures.

THIS PAGE INTENTIONALLY LEFT BLANK

7.A.4 References

1. ISG-15, "Materials Evaluation," US Nuclear Regulatory Commission, Washington, DC, Revision 0, January 10, 2001.
2. PNL-6365, "Evaluation of Cover Gas Impurities and Their Effects on the Dry Storage of LWR Spent Fuel," Pacific Northwest Laboratory, Richland, Washington, November, 1987.
3. ISG-18, "The Design/Qualification of Final Closure Welds on Austenitic Stainless Steel Canisters as Confinement Boundary for Spent Fuel Storage and Containment Boundary for Spent Fuel Transportation," US Nuclear Regulatory Commission, Washington, DC, May 2003.
4. ASME Boiler and Pressure Vessel Code, Section III, Division 1, Subsection NB, "Class 1 Components," 2004 Edition with 2006 Addenda.
5. ASME Boiler and Pressure Vessel Code, Section IX, "Qualification Standard for Welding and Brazing Procedures, Welders, Brazers, and Welding and Brazing Operators," 2004 Edition with 2006 Addenda.
6. Code of Federal Regulations, "Licensing Requirements for the Independent Storage of Spent Nuclear Fuel, High-Level Radioactive Waste, and Reactor-Related Greater than Class C Waste," Part 72, Title 10.
7. NUREG-1536, "Standard Review Plan for Dry Cask Storage Systems," January 1997.
8. Deleted
9. ANSI N14.5-1997, "American National Standard for Radioactive Materials – Leakage Tests on Packages for Shipment," American National Standards Institute, 1997.
10. Recommended Practice No. SNT-TC-1A, "Personnel Qualification and Certification in Nondestructive Testing," The American Society for Nondestructive Testing, Inc., edition as invoked by the applicable ASME Code.

THIS PAGE INTENTIONALLY LEFT BLANK

Table of Contents

8.0 OPERATING PROCEDURES 8-1

8.1 Procedures for Loading the Universal Storage System 8.1-1
- 8.1.1 Loading and Closing the Canister 8.1.1-1
- 8.1.2 Loading the Vertical Concrete Cask 8.1.2-1
- 8.1.3 Transport and Placement of the Vertical Concrete Cask 8.1.3-1

8.2 Removal of the Loaded Canister from the Vertical Concrete Cask 8.2-1

8.3 Unloading the Canister 8.3-1

8.4 References 8.4-1

Appendix 8.A OPERATING PROCEDURES UNITAD Storage System 8.A-i

List of Figures

Figure 8.1.1-1 Typical Vent and Drain Port Locations 8.1.1-8
Figure 8.3-1 Canister Reflood Piping and Controls Schematic 8.3-4

List of Tables

Table 8.1.1-1 List of Principal Ancillary Equipment 8.1.1-9
Table 8.1.1-2 Torque Values 8.1.1-10
Table 8.1.1-3 Handling Time Limits Based on Decay Heat Load with Canister Full of Water 8.1.1-11

Appendix 8.A OPERATING PROCEDURES UNITAD Storage System

Table of Contents

Table of Contents 8.A-i
List of Tables 8.A-ii

8.A OPERATING PROCEDURES FOR THE UNITAD STORAGE SYSTEM 8.A-1

8.A.1 Procedures for Loading the UNITAD Storage System 8.A.1-1
8.A.1.1 Loading and Closing the Canister 8.A.1-2

8.A.2 Transferring the Canister to the Vertical Concrete Cask 8.A.2-1

8.A.3 Transporting and Placing the Loaded Concrete Cask 8.A.3-1

8.A.4 Removing the Loaded Canister from a Concrete Cask 8.A.4-1
8.A.4.1 Wet Unloading of a Canister 8.A.4-2

8.A.5 References 8.A.5-1

List of Tables

Table 8.A-1 Major Auxiliary Equipment 8.A.3-3
Table 8.A-2 Threaded Component Torque Values 8.A.3-6

8.A OPERATING PROCEDURES FOR THE UNITAD STORAGE SYSTEM

This chapter provides general procedural guidance for the loading, unloading, and recovery of the UNITAD Storage System. System user personnel shall use this information to prepare the detailed, site-specific procedures for loading, handling, storing, and unloading UNITAD storage units. Users may add, delete, or change the sequence of specific steps of the procedures to accommodate site-specific requirements provided that the general order of the tasks associated with the Canister closure and storage is preserved, the Limiting Conditions of Operations (LCOs) of the Technical Specifications are satisfied, and that the specific requirements for fastener torque values, temperature limits for operations, and other defined values in the procedure are also met.

All facility-specific procedures prepared by users shall fully comply with the requirements applicable to the UNITAD Storage System, as contained in the NAC-UMS® Storage System Certificate of Compliance (CoC) and Technical Specifications, including the approved contents and design features.

Equipment and operating requirements will be established by the user prior to implementation. Refer to Table 8.A-1 for a listing of the major auxiliary equipment generally required by the user to load and close, or to open and unload the system. The UNITAD Storage System provides effective shielding for operating personnel; however, the licensee/user may utilize supplemental shielding to further reduce operator radiation exposure. The planned location, type, and possible interactions of the temporary supplemental shielding with the UNITAD Storage System shall be appropriately evaluated by the licensee/user. The UNITAD Storage System, when operated by properly trained personnel in accordance with the generic procedures provided herein, will meet As Low As Reasonably Achievable (ALARA) guidance for personnel exposure control.

The UNITAD Storage System design features minimize the potential for contamination of the Canister during fuel loading, Canister preparation, and transfer. The Canister is loaded in the spent fuel pool, but the external surfaces of the Canister are protected from contact with the contaminated pool water by clean borated water maintained in the annulus between the transfer cask and the Canister. For purposes of the operating procedures, clean water is defined as demineralized, processed, or filtered pool water, or any water external to the spent fuel pool that has water chemistry compatible for use in the spent fuel pool. During loading operations, only the Canister closure lid is exposed to the spent fuel pool water. The smooth top surface of the closure lid can be readily decontaminated. Therefore, the Canister external surfaces are expected

to be essentially free of removable contamination during long-term storage operations. Final removal contamination surveys shall be performed on the closed Canister prior to placement of the UNITAD Storage System into storage operations to ensure that the Canister contamination meets regulatory and site established limits.

Tables in Appendix 3.A provide the handling weights for the major components of the UNITAD Storage System and the loads to be lifted during various phases of the loading and unloading operations. Licensees/users shall perform appropriate reviews and evaluations to ensure that the lifted loads do not exceed rated load limits of user-supplied lifting equipment and comply with the facility's heavy-load program.

8.A.1 Procedures for Loading the UNITAD Storage System

The UNITAD Storage System is used to load, transfer, and store spent fuel. The three principal components of the system are: the Canister, the transfer cask, and the Vertical Concrete Cask (concrete cask). The transfer cask contains and supports the Canister during fuel loading, lid welding and closure operations. The transfer cask, with the transfer adapter, is also used to move the Canister into position for placement in the concrete cask.

These loading procedures are based on three initial conditions.

- the transfer cask is located in a facility's designated workstation for cask preparation
- an empty Canister (properly receipt inspected and accepted) is located in the transfer cask cavity
- an accepted concrete cask is available to receive the Canister when loading and preparation activities are complete

The Canister is filled with clean or pool borated water with the minimum boron concentration confirmed ≥ 700 ppm as specified in the Technical Specifications. The transfer cask containing the Canister is lowered into the spent fuel pool for fuel assembly loading and verification. The user shall identify and select the intact PWR spent fuel assemblies to be loaded, and verify that all loaded fuel assemblies comply with the Approved Content provisions of the CoC, as applicable to the UNITAD Storage System.

Following fuel loading, the closure lid is installed and the transfer cask containing the loaded Canister is lifted from the bottom of the spent fuel pool. The Canister is partially drained and the closure lid is welded to the Canister shell. The closure lid-to-shell weld is progressively examined by visual and dye penetrant methods. The cavity is refilled and the Canister is subjected to a hydrostatic pressure test with no loss in pressure or observable leakage allowed. Following hydrostatic pressure test acceptance, the closure ring, which provides the redundant confinement closure barrier for the closure lid, is installed, welded and inspected. The Canister cavity water is then drained.

The residual moisture in the Canister is then removed by vacuum drying techniques and the Canister dryness is verified in accordance with the Technical Specifications. The Canister is then further evacuated to a final pressure of ≤3 torr and backfilled to a nominal atmospheric pressure with high-purity helium to provide an inert atmosphere for the safe long-term storage of the spent

fuel contents. System connections to the vent and drain openings are removed and the inner port covers are installed, welded, dye penetrant examined and helium leakage rate tested. The outer port covers, which provide the redundant sealing of the confinement boundary provided by the ports, are installed, welded and dye penetrant examined. Installation and welding of the closure lid, closure ring and port covers complete the assembly of the confinement boundary.

The concrete cask is positioned for the transfer of the Canister and the transfer adapter is installed. The transfer cask containing the loaded Canister is positioned on the transfer adapter on the top of the concrete cask. The transfer cask bottom doors are opened and the Canister is lowered into the concrete cask. The transfer cask and transfer adapter are removed. The concrete cask lid assembly is installed and secured to complete the loading process.

The loaded concrete cask is moved to the ISFSI storage pad using the site-specific transporter and placed in its long-term storage location. Final radiation surveys are completed and the temperature-monitoring system is installed, if used, which completes the UNITAD loading and transfer sequence.

8.A.1.1 Loading and Closing the Canister

This section describes the sequence of operations to load and close the Canister in preparation for transferring the Canister to the concrete cask. The empty Canister is assumed to be positioned inside the transfer cask located at the designated workstation.

1. Visually inspect the Canister and basket internals for foreign materials or debris.
2. Visually inspect the top of the Canister shell and closure lid weld preps.
3. Inflate the upper and lower transfer cask annulus seals with air or nitrogen gas. Disconnect the gas supply.
4. Verify the Canister retaining blocks are pinned in the retracted position.
5. Verify that at least one lock pin is installed on each transfer cask shield door.
6. Fill the Canister with borated water. The soluble boron concentration in the Canister shall be verified and monitored in accordance with the LCO 3.3.1.
7. Attach the lift yoke to a crane suitable for handling the loaded Canister, transfer cask and yoke. Position the lift yoke over the transfer cask and engage the lift yoke to the two transfer cask trunnions.

Note: The temperature of the transfer cask (surrounding ambient air temperature) must be verified to be at or above the minimum operating temperature of 0°F, per Section B 3.4.1, Item 7 of Appendix B of the NAC-UMS® Storage System Technical Specifications.

8. Lift the transfer cask containing the empty Canister and move it to the spent fuel pool following the prescribed load path.
9. Connect the clean borated water lines to the lower annulus fill ports of the transfer cask. Ensure that the unused ports are closed or capped to prevent pool water in-leakage.
10. Lower the transfer cask to the pool surface and turn on the clean borated water supply lines to the lower annulus fill ports to fill the transfer cask/Canister annulus.
11. Spray the transfer cask and lift yoke with clean water to wet the exposed surfaces.

    Note: Wetting the components that enter the spent fuel pool and spraying the components leaving the pool will reduce the effort required to decontaminate the components.

12. Lower the transfer cask as the annulus fills with clean water until the upper annulus fill ports are accessible. Hold this position and connect the clean borated water annulus fill lines to the upper fill ports. Ensure the unused ports are closed or capped to prevent pool water in-leakage.
13. Lower the transfer cask to the bottom of the pool in the cask loading area. Maintain a positive pressure of clean borated water on the transfer cask annulus through the upper fill ports to minimize intrusion of contaminated pool water into the transfer cask annulus.
14. Disengage the lift yoke and visually verify that the lift yoke is fully disengaged. Remove the lift yoke from the spent fuel pool while spraying the yoke and crane cables with clean water.
15. Load the previously selected fuel assemblies into the Canister basket.

    Note: The fuel assemblies shall be selected in compliance with the requirements of the approved contents specified in Appendix B of the Technical Specifications and the maximum fuel burnup limits on low enriched fuel assemblies per Table B 2-11 of the Technical Specifications. Assembly selection shall be independently verified to comply with the CoC and Technical Specification approved content conditions.

16. Visually verify the fuel assembly identification to confirm the serial numbers match the approved fuel-loading pattern.
17. Install three swivel hoist rings hand tight in three of the six closure lid lift holes. Install a three-legged sling set to the hoist rings and connect the sling set to the crane hook or the attachment point on the lift yoke.

Note: At the discretion of the user, the closure lid can be attached to the lift yoke and the lid installed during the lowering of the lift yoke.

18. Raise the closure lid. Adjust closure lid rigging to level the closure lid.
19. Move the closure lid over the spent fuel pool and align the lift yoke (if used) to the transfer cask trunnions and align the closure lid to the match marks of the Canister.
20. Lower the closure lid until it enters the Canister and seats in the top of the Canister. Visually verify closure lid alignment using the match marks.
21. Allow sling cables to go slack and move the lift yoke into position to engage the transfer cask trunnions. Engage the lift yoke to the trunnions, apply a slight tension, and visually verify engagement.
22. Raise the transfer cask until its top clears the pool surface. Visually verify that the closure lid is properly seated. If necessary, lower the transfer cask and reinstall the closure lid. Rinse the lift yoke and transfer cask with clean water as the equipment is removed from the pool. Note the time the transfer cask is removed from the spent fuel pool. Monitor total time from removal of the Canister from the spent fuel pool through completion of canister draining operations (time to boil limitation) to be less than 22 hours. Also monitor total time in transfer cask in accordance with LCO 3.1.4.
23. Rinse and flush the top of the transfer cask and Canister with clean water as necessary to remove any radioactive particles. Survey the top of the Canister closure lid and the top of the transfer cask to check for radioactive particles.
24. As the transfer cask is removed from the spent fuel pool, terminate the annulus fill water supply, remove the annulus fill system hoses and deflate the annulus seals, and allow annulus water to drain into the spent fuel pool.
25. Following the prescribed load path, move the transfer cask to the designated workstation for Canister closure operations.

    Note: At the option of the user, the Canister closure operations may be performed with the transfer cask partially submerged in the spent fuel pool, cask loading pit or an equivalent structure. This operational alternative provides additional shielding for the cask operators.

26. Disengage the three-legged sling set from the closure lid and the lift yoke from the transfer cask trunnions. Place lift yoke and sling set in storage/lay-down area.
27. Detorque and remove the lifting hoist rings from the closure lid.
28. Using a portable suction pump, remove any standing water from the closure lid weld groove, and the vent and drain ports.

29. Decontaminate the top of the transfer cask and Canister closure lid to allow installation of the welding equipment. Decontaminate external surfaces of the transfer cask and remove the bottom protective cover, if installed.
30. Insert the drain line with a female quick-connector attached through the drain port opening and into the basket drain port sleeve. Remove the female quick-disconnect and any contaminated water displaced from the cavity.
31. Torque the drain tube connector to the drain opening to the value specified in Table 8.A-2. Verify quick-disconnect is installed and properly torqued in the vent port opening.
32. Install a vent line to the vent port quick-disconnect to prevent combustible gas or pressure buildup below the closure lid.
33. Verify that the top of the closure lid is level (flush) with, or slightly above, the top of the Canister shell.
34. At the discretion of the user, establish foreign material exclusion controls to prevent objects from being dropped into the annulus or Canister.
35. Install the welding system, including supplemental shielding, to the top of the closure lid.

    Note: At the discretion of the user, supplemental shielding may be installed around the top of the transfer cask or above the transfer cask annulus to reduce operator dose. Use of supplemental shielding shall be evaluated to ensure its use does not adversely affect the safe performance of the UNITAD Storage System.
36. Connect a suction pump to the drain port quick-disconnect and verify venting through the vent port quick-disconnect.
37. Operate the suction pump to remove approximately 70 gallons of water from the Canister. Disconnect the suction pump.

    Note: The radiation level will increase as water is removed from the Canister cavity, as shielding material is being removed.

    Note: Fuel rods shall not be exposed to air during the 70-gallon pump-down.
38. Attach a hydrogen detector to the vent line. Ensure that the vent line does not interfere with the operation of the weld machine.
39. Sample the gas volume below the closure lid and observe hydrogen detector for H_2 concentration prior to commencing closure lid welding operations. Monitor H_2 concentration in the Canister until the root pass of the closure lid-to-shell weld is completed.

    Note: If H_2 concentration exceeds 2.4% (60% of minimum explosive level) prior to or during root pass welding operations, immediately stop welding operations. Evacuate

the Canister gas volume or purge the gas volume with helium. Verify H_2 levels are < 2.4% prior to restarting welding operations.

Note: If closure lid welding operations are delayed after completion of the root pass, re-verify the acceptable H_2 concentration of < 2.4% prior to restarting welding operations.

40. Install shims into the closure lid-to-Canister shell gap, as necessary, to establish a uniform gap for welding. Tack weld the closure lid and shims, as required.
41. Operate the welding equipment to complete the closure lid-to-shell root pass weld in accordance with the approved weld procedure.
42. Perform visual and liquid penetrant (PT) examinations of the root pass and record the results.
43. Remove the H_2 detector from the vent line while ensuring the vent line remains installed.
44. Operate the welding equipment to perform the closure lid-to-shell weld to the midplane between the root and final weld surfaces. Perform visual and PT examinations for the midplane weld pass, and record the results.
45. Complete closure lid welding through the completion of the final pass of the closure lid weld, perform final visual and PT examinations and record the results.
46. Perform the hydrostatic test of the Canister as follows:
    a. Connect a drain line to the vent port and a hydrostatic pressure test system to the drain port.
    b. Refill the Canister with clean borated water until water is observed flowing from the vent port drain line. Close the vent line isolation valve. Ensure continuing compliance with the boron concentration requirements of LCO 3.2.1.
    c. Pressurize the Canister to 19 (+3, -0) psig and isolate the Canister.
    d. Monitor and maintain the Canister pressure for a minimum of 10 minutes.
    e. Following the 10 minute hold and maintaining the hydrostatic test pressure, visually examine the closure lid-to-Canister shell weld for leakage of water.
    f. The hydrostatic test is acceptable if there is no visible water leakage from the closure lid weld during the test.
    g. Vent the Canister cavity and remove the hydrostatic pressure test system from the drain port and the drain line from the vent line. Reinstall a vent line to the vent port to prevent pressurization of the Canister.
47. Install and tack the closure ring in position in the closure lid-to-Canister shell weld groove.
48. Weld the closure ring to the Canister shell and to the closure lid. Perform visual and PT examinations of the final surfaces of the welds and record the results.

49. Remove the water from the Canister using one of the following methods: drain down using a suction pump with pressurized helium cover gas, or blow down using pressurized helium gas.

    Note: Fuel rods shall not be exposed to air during Canister draining operations.

50. Connect a drain line with or without suction pump to the drain port connector.
51. Connect a regulated helium gas supply to the vent port connector.
52. Open gas supply valve and start suction pump, if used, and drain water from the Canister until water ceases to flow out of the drain line. Close gas supply valve and stop suction pump.
53. Record the time at the completion of the draining of the Canister. Verify total time from removal of the Canister from the spent fuel pool through completion of the draining operation is less than 22 hours.
54. At the option of the user, disconnect suction pump, close discharge line isolation valve, and open helium gas supply line. Pressurize Canister to approximately 20 psig and open discharge line isolation valve to blow down the Canister. Repeat blow down operations until no significant water flows out of the drain line.
55. Disconnect the drain line and gas supply line from the drain and vent port quick-disconnects.
56. Dry the Canister cavity using vacuum drying methods as follows:

    Note: There are no heat load-dependent vacuum drying time limits per LCO 3.1.1 for the UNITAD System and, therefore, vacuum drying may be continued as required to meet the dryness criteria specified in LCO 3.1.2. Total time in the transfer cask shall be monitored in accordance with LCO 3.1.4.

    Note: At the option of the user, the drain and/or vent port quick-disconnects can be removed and replaced temporarily with suitable straight-through fittings to increase flow area cross-section and to reduce resistance to gas flow. The quick-disconnect fittings must be reinstalled and torqued prior to final helium backfill.

    a. Connect the vacuum drying system to the vent and drain port openings.
    b. Operate the vacuum pump until a vapor pressure of < 10 torr is achieved in the Canister.
    c. Isolate the vacuum pump from the Canister and turn off the vacuum pump. Observe the vacuum gauge connected to the Canister for an increase in pressure for a minimum period of 10 minutes. If the Canister pressure is ≤ 10 torr at the end of 10 minutes, the Canister is dry of free water in accordance with LCO 3.1. 2.

57. Upon satisfactory completion of the dryness verification, evacuate the Canister cavity to a pressure of ≤ 3 torr. Isolate the vacuum pump, and backfill the Canister cavity with 99.995% (minimum) pure helium to 15 (+3,-0) psia.

58. Disconnect the vacuum drying helium backfill system from the vent and drain openings.
59. Install and weld the inner port cover on the drain port opening.
60. Install and weld the inner port cover on the vent port opening.
61. Perform visual and PT examinations of the final surface of the port cover welds and record the results.
62. Perform helium leak test on each of the inner port cover welds to verify the absence of helium leakage past the inner port cover welds.
63. Install and weld the outer port cover on the drain port opening. Perform visual and PT examinations of the final weld surface and record the results.
64. Install and weld the outer port cover on the vent port opening. Perform visual and PT examinations of the final weld surface and record the results.
65. Using an appropriate crane, remove the weld machine and supplemental shield.
66. Remove the lock pins and move the transfer cask retaining blocks inward into their functional position. Reinstall the lock pins.
67. Install the six swivel hoist rings into the six threaded holes in the closure lid if Canister transfer is to be performed by two sets of redundant slings. Torque the hoist rings to the manufacturer's recommended value.

    Note: Alternative site-specific Canister lifting systems and equipment may be used for lowering and lifting the Canister in the transfer cask. The lifting system design must comply with the user's heavy load program and the applicable requirements of ANSI N14.6, NUREG-0612, and/or ASME/ANSI B30.1, as appropriate.
68. Complete final decontamination of the transfer cask exterior surfaces. Final Canister contamination surveys may be performed after Canister transfer following Step 21 in Section 8.A.2 when Canister surfaces are more accessible.
69. Proceed to Section 8.A.2.

8.A.2 Transferring the Canister to the Vertical Concrete Cask

This section describes the sequence of operations required to complete the transfer of a loaded Canister from the transfer cask into a concrete cask, and preparation of the concrete cask for movement to the ISFSI pad.

1. Position an empty concrete cask with the lid assembly removed in the designated Canister transfer location.

   Note: The concrete cask can be positioned on the ground, or on a deenergized air pad set, roller skid, heavy-haul trailer, rail car, or transfer cart. The transfer location can be in a truck/rail bay inside the loading facility or an external area accessed by the facility cask handling crane.

   Note: The minimum ambient air temperature (either in the facility or external air temperature, as applicable for the handling sequence) must be ≥ 0°F for the use of the concrete cask, per Section B 3.4.1, Item 8 of Appendix B of the NAC-UMS® Storage System Technical Specifications.

2. Inspect all concrete cask openings for foreign objects and remove if present; Install supplemental shielding in four outlets, as required.
3. Install a four-legged sling set to the lifting points on the transfer adapter.
4. Using the crane, lift the transfer adapter and place it on top of the concrete cask ensuring that the guide ring sits inside the concrete cask lid flange. Remove the sling set from the crane and move the slings out of the operational area.
5. Connect a hydraulic supply system to the hydraulic cylinders of the transfer adapter.
6. Verify the movement of the connectors and move the connector tees to the fully extended position.
7. Connect the lift yoke to the crane and engage the lift yoke to the transfer cask trunnions. Ensure all lines, temporary shielding and work platforms are removed to allow for the vertical lift of the transfer cask.

   Note: The minimum ambient air temperature (either in the facility or external air temperature, as applicable for the handling sequence) must be ≥ 0°F for the use of the transfer cask, per Section B 3.4.1, Item 7 of Appendix B of the NAC-UMS® Storage System Technical Specifications.

8. Raise the transfer cask and move it into position over the empty concrete cask.
9. Slowly lower the transfer cask into the engagement position on top of the transfer adapter to align with the door rails and engage the connector tees.

10. Following transfer cask set down on the transfer adapter, remove the lock pins from the shield door lock tabs.
11. Install a stabilization system for the transfer cask, if required by the facility heavy load handling or seismic analysis programs.
12. Disengage the lift yoke from the transfer cask trunnions and move the lift yoke from the area.
13. As appropriate to the Canister lifting system being used, move the lifting system to a position above the transfer cask. If redundant sling sets are being used, connect the sling sets to the crane hook.
14. Using the Canister lifting system, lift the Canister slightly (approximately ½-1 inch) to remove the Canister weight from the shield doors.

    Note: The lifting system operator must take care to ensure that the Canister is not lifted such that the retaining blocks are engaged by the top of the Canister.
15. Open the transfer cask shield doors with the hydraulic system to provide access to the concrete cask cavity.
16. Using the cask handling crane in slow speed (or other approved site-specific handling system), slowly lower the Canister into the concrete cask cavity until the Canister is seated on the pedestal.

    Note: The transfer adapter and the standoffs in the concrete cask will ensure the Canister is appropriately centered on the pedestal within the concrete cask.
17. When the Canister is seated, disconnect the slings (or other handling system) from the lifting system, and lower the sling sets through the transfer cask until they rest on top of the Canister.
18. Retrieve the lift yoke and engage the lift yoke to the transfer cask trunnions.
19. Remove the seismic/heavy load restraints from the transfer cask, if installed.
20. Close the shield doors using the hydraulic system and reinstall the lock pins into the shield door lock tabs.
21. Lift the transfer cask from the top of the concrete cask and return it to the cask preparation area for next fuel loading sequence or to its designated storage location.
22. Disconnect hydraulic supply system from the transfer adapter hydraulic cylinders.
23. Remove redundant sling sets, swivel hoist rings, or other lifting system components from the top of the Canister, if installed.
24. Verify all equipment and tools have been removed from the top of the Canister and transfer adapter.

25. Connect the transfer adapter four-legged sling set to the crane hook and lift the transfer adapter off the concrete cask. Place the transfer adapter in its designated storage location and remove the slings from the crane hook. Remove supplemental shielding from outlets.
26. Install three swivel hoist rings into the concrete cask lid and attach the three-legged sling set. Attach the lifting sling set to the crane hook.
27. At the option of the user, install the weather seal on the concrete cask lid flange. Lift the concrete cask lid and place it in position on the top of the flange.
28. Remove the sling set and swivel hoist rings and install the concrete cask lid bolts. Torque to the value specified in Table 8.A-2.
29. Move the loaded concrete cask into position for access to the site-specific transport equipment.
30. Proceed to Section 8.A.3.

THIS PAGE INTENTIONALLY LEFT BLANK

8.A.3 Transporting and Placing the Loaded Concrete Cask

The section describes the general procedures for moving a loaded concrete cask to the ISFSI pad using either a vertical cask transporter (Step 1 through Step 5) or a flat-bed transport vehicle (Steps 6 through 13). Steps following Step 13 are performed for all concrete casks.

Vertical Cask Transporter

1. Using the vertical cask transporter lift fixture or device, engage the two concrete cask lifting lugs.
2. Lift the loaded concrete cask and move it to the ISFSI pad following the approved onsite transport route.

   Note: Ensure vertical cask transporter lifts the concrete cask evenly using the two lifting lugs.

   Note: Do not exceed the maximum lift height for a loaded concrete cask of 24 inches, per Table A5-1 of Appendix A of the NAC-UMS® Storage System Technical Specifications.
3. Move the concrete cask into position over its intended ISFSI pad storage location. Ensure the surface under the concrete cask is free of foreign objects and debris.

   Note: The spacing between adjacent loaded concrete casks must be ≥ 15 feet.
4. Using the vertical transporter, slowly lower the concrete cask into position.
5. Disengage the vertical transporter lift connections from the two concrete cask lifting lugs. Move the cask transporter from the area.

Flat-bed Transport Vehicle Loaded with the Closed Concrete Cask

6. Move the transport vehicle with the closed concrete cask to a position adjacent to the ISFSI pad.
7. If required, install a bridging plate to cover the gap between the vehicle and the ISFSI pad.
8. If not already installed, insert four deflated air pads into the four inlets.
9. Attach a restraining device around the concrete cask and connect to a tow vehicle suitable for pushing or pulling the concrete cask off of the transport vehicle.
10. Using an air supply and an air pad controller, inflate the air pads.
11. Verify the ISFSI pad surface in the storage location is free of foreign objects and debris.

12. Using the tow vehicle, move the concrete cask into its position on the storage pad.

    Note: The center-to-center spacing of loaded concrete casks must be ≥15 feet.

13. Lower the concrete cask into position by deflating and removing the four air pads.

All Concrete Casks

14. If optional temperature monitoring is implemented, install the temperature monitoring devices in each of the four outlets of the concrete cask and connect to the site's temperature monitoring system.
15. Install inlet and outlet screens to prevent access by debris and small animals.

    Note: Screens may be installed on the concrete cask prior to Canister loading to minimize operations personnel exposure.

16. Scribe and/or stamp the concrete cask nameplate to indicate the loading date. If not already done, scribe or stamp any other required information.
17. Perform a radiological survey of the concrete cask within the ISFSI array to confirm dose rates comply with ISFSI administrative boundary and site boundary dose limits.
18. Initiate a daily temperature monitoring program or daily inspection program of the inlet and outlet screens to verify continuing effectiveness of the heat removal system in accordance with LCO 3.1.6.

Table 8.A-1 Major Auxiliary Equipment

Item	Description
Air Pad Rig Set	A device consisting of four air pads, a controller, and an air supply source that lifts the concrete cask using air supplied at a high volume.
Annulus Fill System	System that supplies clean/filtered spent fuel pool water through the transfer cask/Canister annulus using the lower and upper transfer cask fill lines. The system maintains a positive clean water flow to minimize the exposure of the Canister external surfaces to contaminated spent fuel pool water.
Annulus Seals	Inflatable seals provided at the top and bottom of the transfer cask/Canister annulus for use with the annulus fill and annulus circulating water cooling systems.
Canister Upender	Lifting device used to upright a Canister from the horizontal position to a vertical orientation to allow vertical handling for placing the Canister in the transfer cask.
Cask Transporter	A heavy-haul trailer, a rail car, a vertical cask transporter, or other specially designed equipment used onsite to move the concrete cask. The loaded concrete cask is transported vertically resting on its base (requiring a flat-bed transporter) or it is transported vertically suspended from its lifting lugs (requiring a vertical cask transporter).
Closure Lid Lifting Sling System	Sling system used to install the closure lid into the Canister in the spent fuel pool. At the user's option, the sling system can be suspended from the lift yoke and used to install the lid and engage the yoke with one crane sequence.
Cooldown System (CDS)	Introduces nitrogen, helium and cooling water to the Canister cavity to cool down the Canister internals and stored spent fuel to allow the return of the Canister to the spent fuel pool for the unloading of the fuel assemblies. This system would only be required in the highly unlikely event that a loaded Canister had to be unloaded.

Table 8.A-1 Major Auxiliary Equipment (continued)

Item	Description
Drain and Blow Down System (DBS)	System used to pump out and/or blow down the water from the Canister cavity prior to the start of drying operations, and to refill the cavity and hydrostatic test the closure lid weld. The system includes the appropriate suction pump, piping/hoses, helium cover gas supply, pressure gauges, and valves to connect to the Canister vent and drain port connections to complete the draining and hydrostatic testing of the cavity.
Hydrogen Detection System	System that detects increased concentration of H_2 in the cavity resulting from material reactions during closure lid root pass welding operations and for closure lid weld removal operations.
Helium Mass Spectrometer Leak Detector (MSLD)	A system utilized to perform the helium leakage testing of the inner vent and drain port cover welds.
Lift Yoke (with Crane Hook Extension, if required)	Device for lifting and moving the UNITAD transfer cask by engaging the lifting trunnions.
Loaded Canister Sling System	Redundant sling system (two 3-legged slings) used to transfer a Canister into a concrete cask or a transfer cask and meeting the requirements of ANSI N14.6 and the facility crane. Alternative Canister handling systems that meet site-specific or client requirements and comply with the facility's heavy lift program developed per NUREG-0612 may be utilized.
Remote/Robotic Welding System	System that completes the closure lid and port cover welds with minimal operator assistance. The system may include video cameras and a recording device to remotely observe the welding activities and to videotape the results of the closure lid PT examinations.
Supplemental Weld Shield	Optional steel plate or neutron shielding materials installed on the closure lid to provide additional shielding to the cask operators during Canister welding, preparation, and test activities. The supplemental weld shield may be installed separately or as the base plate for the welding system.

Table 8.A-1 Major Auxiliary Equipment (continued)

Item	Description
Vacuum Drying and Helium Backfill System	The system used to vaporize and remove residual water, water vapor, and oxidizing gases from the Canister cavity prior to backfilling with helium. The system includes the appropriate vacuum pump(s), vacuum and pressure gauges, helium supply connections and valves, and hoses to connect the system to the vent and drain connections.
Weld Removal System	Semiautomatic mechanical weld and/or Canister shell cutting system used to remove the closure lid and port cover welds in the unlikely event that a Canister needs to be unloaded.

Table 8.A-2 Threaded Component Torque Values

Threaded Component	Torque Value (ft-lb)
Concrete Cask Lid Bolts	Snug + 1 wrench flat
Concrete Cask Body Extension	Snug + 1 wrench flat
Closure Lid Lifting Hoist Rings • Lid Handling Only • Loaded CANISTER Handling	 Hand Tight Per hoist ring manufacturer's recommendation
Drain Tube Connector • Viton, EDPM, or Elastomer Seal • Metallic Seal	 Per seal manufacturer's specs Per seal manufacturer's specs
Vent Port Connector • Viton, EDPM, or Elastomer Seal • Metallic Seal	 Per seal manufacturer's specs Per seal manufacturer's specs
Concrete Cask Lid Lifting Hoist Rings	Hand Tight

8.A.4 Removing the Loaded Canister from a Concrete Cask

This procedure assumes the loaded concrete cask is returned to the reactor loading facility for unloading. However, transfer of the Canister to another concrete cask can be performed at the ISFSI without the need to return to the loading facility, provided a cask transfer facility that meets the requirements specified in the Technical Specifications is available.

As the steps to move a loaded concrete cask are essentially the reverse of the procedures in Section 8.A.2 and Section 8.A.3, the procedural steps are only summarized here.

1. Remove inlet and outlet screens and temperature measuring equipment (if installed).

   Note: The minimum ambient air temperature (either in the facility or external air temperature, as applicable for the handling sequence) must be ≥ 0°F for the use of the concrete cask, per Section B 3.4.1, Item 8 of Appendix B of the NAC-UMS® Storage System Technical Specifications.
2. Move the loaded concrete cask to the facility.
3. Remove the concrete cask lid.
4. Install the six hoist rings into the Canister closure lid threaded holes.
5. Install transfer adapter on top of the concrete cask.
6. Place transfer cask onto the transfer adapter and engage the shield door connectors. Ensure the retaining blocks are in the engaged position.

   Note: The minimum ambient air temperature (either in the facility or external air temperature, as applicable for the handling sequence) must be ≥ 0°F for the use of the transfer cask, per Section B 3.4.1, Item 7 of Appendix B of the NAC-UMS® Storage System Technical Specifications.
7. Open the shield doors, retrieve the lifting slings, and install the slings on the lifting system.
8. Slowly withdraw the Canister from the concrete cask. The chamfer on the underside of the transfer adapter assists in the alignment of the Canister into the transfer cask.
9. Bring the Canister up to just below the retaining blocks. Close the transfer cask shield doors and install the shield door lock pins.
10. Disconnect the Canister lifting slings from the crane hook.
11. Connect lift yoke to the crane hook and engage the lift yoke to the transfer cask.
12. Lift transfer cask off the concrete cask and move to the designated workstation.

8.A.4.1 Wet Unloading of a Canister

This section provides the basic operational sequence to prepare, open, and unload a Canister in a spent fuel pool. Due to the rugged design and fabrication of the Canister, users are not expected to need to perform this operational sequence during the storage life of the system. However, in accordance with the Technical Specifications, each user shall have the procedures and required equipment available, and perform a dry run of the unloading process.

The procedure that follows assumes that the Canister is in a transfer cask in the appropriate workstation.

1. Pull the lock pins and retract the retaining blocks in the transfer cask. Reinstall the lock pins.
2. Survey the Canister and transfer cask to establish radiation areas.
3. Install the weld removal system on the closure lid and bolt the system to the closure lid threaded holes.
4. Establish appropriate airborne radiation controls.
5. Using the weld removal system, remove the outer and inner port covers from the vent and drain ports.
6. Remove the weld removal system.
7. Using a vacuum sample bottle, take a gas sample of cavity gas.
8. Determine total gaseous inventory and connect a venting system to the vent connector and route to HEPA filters or to the facility's off-gas system.
9. Determine Canister internal pressure and vent the cavity gas.
10. Once pressure has been reduced to atmospheric, and using appropriate radiological controls, remove the vent and drain quick-disconnects and seals.
11. Replace the quick-connects and seals with approved spares, and torque them to the value specified in Table 8.A-2.
12. Attach the cooldown system to the vent and drain connections.
13. Initiate nitrogen gas flow through the Canister to flush out residual radioactive gases. Continue nitrogen flow for a minimum of 10 minutes.
14. Initiate the controlled filling (5 +3/-0 gpm) of the Canister with borated water (minimum boron concentration greater than or equal to 700 ppm per LCO 3.3.1) through the drain connector under controlled temperature (minimum 70°F) and pressure conditions (25 +10/-0 psig). Borated water shall be in accordance with LCO 3.2.1.

15. Monitor steam/water temperature of the discharge from the vent connection.
16. Continue cooldown operations until the discharge water temperature is below 180°F.
17. Terminate cooling water flow and disconnect the cooldown system from the drain and vent ports. Install a vent line to the vent port.
18. Connect a suction pump to the drain connector. Operate the pump and remove approximately 70 gallons of water from the cavity. Disconnect and remove the pump.
19. Remove the drain line from the closure lid.
20. Install the hydrogen detector to the vent line and verify hydrogen gas concentration in the gas volume in the cavity. If the concentration reaches 2.4%, stop all cutting activities and remove cavity gas using a vacuum pump.
21. Install the weld removal system on the closure lid. Operate the weld removal system to remove the closure ring-to-shell and closure ring-to-closure lid welds. Remove the closure ring from the lid area.
22. Operate the weld removal system to remove the closure lid-to-shell weld.
23. Remove shims, if installed, to provide a suitable gap to be able to extract the closure lid under water.
24. Remove the weld removal system.
25. Install three swivel hoist rings into the closure lid threaded holes. Attach three-legged sling set to the hoist rings and the lifting system (or, alternately, the transfer cask lifting yoke).
26. Engage the lift yoke to the transfer cask trunnions and bring the transfer cask over the spent fuel pool.
27. Install lower annulus fill lines and fill the annulus with clean water while lowering the transfer cask.
28. When the trunnions are near the pool surface, install upper annulus fill lines and start clean borated water flow.
29. Lower the transfer cask to the bottom of the pool. Disengage the lift yoke.
30. Slowly remove the closure lid and move the lid to an appropriate storage area.

    Note: The closure lid may be contaminated and slightly activated.
31. Following fuel unloading, reengage the lift yoke to the transfer cask trunnions and remove the transfer cask from the pool.
32. While the transfer cask is over the pool, stop the flow of water to the annulus, disconnect the upper and lower fill lines, and allow the water in the annulus to drain back into the pool.
33. Place transfer cask and empty Canister in the cask decontamination area or other workstation.

34. Using a suction pump, remove the water from the Canister and pump to radwaste drains or return the water to the spent fuel pool.
35. Remove and store the contaminated Canister until a determination is made regarding reuse or disposition of the closure lid and Canister.
36. As appropriate, the user may proceed with the loading of the removed fuel assemblies in a new Canister in accordance with the procedures in Section 8.A-1.

8.A.5 References

The UNITAD Storage System references are the same as those for the NAC-UMS® Storage System FSAR, Section 8.4.

THIS PAGE INTENTIONALLY LEFT BLANK

Table of Contents

9.0 ACCEPTANCE CRITERIA AND MAINTENANCE PROGRAM 9.1-1
9.1 Acceptance Criteria 9.1-1
9.1.1 Visual and Nondestructive Examination 9.1-1
9.1.1.1 Nondestructive Weld Examination 9.1-2
9.1.1.2 Construction Inspections 9.1-3
9.1.2 Structural and Pressure Test 9.1-4
9.1.2.1 Transfer Casks 9.1-4
9.1.2.2 Concrete Cask 9.1-5
9.1.2.3 Transportable Storage Canister 9.1-6
9.1.3 Leak Tests 9.1-6
9.1.4 Component Tests 9.1-7
9.1.4.1 Valves, Rupture Disks and Fluid Transport Devices 9.1-7
9.1.4.2 Gaskets 9.1-7
9.1.5 Shielding Tests 9.1-7
9.1.6 Neutron Absorber Tests 9.1-7
9.1.6.1 Neutron Absorber Material Sampling Plan 9.1-8
9.1.6.2 Neutron Absorber Wet Chemistry Testing 9.1-9
9.1.6.3 Acceptance Criteria 9.1-10
9.1.7 Thermal Tests 9.1-10
9.1.8 Cask Identification 9.1-10
9.2 Maintenance Program 9.2-1
9.2.1 UMS® Storage System Maintenance 9.2-1
9.2.2 Transfer Cask Maintenance 9.2-2
9.2.3 Required Surveillance of First Storage System Placed in Service 9.2-2
9.3 References 9.3-1

Appendix 9.A ACCEPTANCE CRITERIA AND MAINTENANCE PROGRAM UNITAD Storage System 9.A-i

THIS PAGE INTENTIONALLY LEFT BLANK

Appendix 9.A ACCEPTANCE CRITERIA AND MAINTENANCE PROGRAM UNITAD Storage System

Table of Contents 9.A-i
List of Tables 9.A-ii

Table of Contents

9.A ACCEPTANCE CRITERIA AND MAINTENANCE PROGRAM FOR THE UNITAD STORAGE SYSTEM 9.A-1

9.A.1 Acceptance Criteria 9.A.1-1
- 9.A.1.1 Visual Inspection and Nondestructive Examination 9.A.1-1
- 9.A.1.2 Structural and Pressure Tests 9.A.1-3
- 9.A.1.3 Leakage Tests 9.A.1-5
- 9.A.1.4 Component Tests 9.A.1-7
- 9.A.1.5 Shielding Tests 9.A.1-7
- 9.A.1.6 Neutron Absorber Tests 9.A.1-8
- 9.A.1.7 Thermal Tests 9.A.1-15
- 9.A.1.8 Cask Identification 9.A.1-16

9.A.2 Maintenance Program 9.A.2-1
- 9.A.2.1 Structural and Pressure Tests 9.A.2-1
- 9.A.2.2 Leakage Tests 9.A.2-2
- 9.A.2.3 Subsystem Maintenance 9.A.2-2
- 9.A.2.4 Shielding Tests 9.A.2-2

9.A.3 References 9.A.3-1

List of Tables

Table 9.A.2-1 UNITAD Storage System Maintenance Program Schedule 9.A.2-3

9.A ACCEPTANCE CRITERIA AND MAINTENANCE PROGRAM FOR THE UNITAD STORAGE SYSTEM

This chapter specifies the workmanship inspections, the acceptance test program and the applicable inspection and test acceptance criteria to be implemented for the fabrication, use and maintenance of the UNITAD System. The inspections and tests described in this chapter provide assurance that UNITAD components are fabricated, inspected, tested, accepted for use and maintained under the conditions specified in this Safety Analysis Report (SAR) and the Certificate of Compliance (CoC).

The controls, inspections and tests set forth in this chapter ensure that the UNITAD System will maintain the confinement of radioactive material under normal conditions or off-normal or accident events of storage; will maintain subcriticality control; will properly transfer the decay heat of the stored radioactive materials; and that the off-site radiation doses will comply with regulatory requirements.

The UNITAD System is classified as important-to-safety and, therefore, the structures, systems and components (SSCs) of the system are designed, fabricated, assembled, inspected, tested, accepted and maintained in accordance with a quality assurance program. The application of the quality assurance program for the system's SSCs shall be commensurate with their defined safety category. The safety classifications of the major SSCs are provided in Chapter 2 of the NAC-UMS® Storage System FSAR.

THIS PAGE INTENTIONALLY LEFT BLANK

9.A.1 Acceptance Criteria

This section provides the workmanship and acceptance tests to be performed on the UNITAD components and systems during their fabrication, as well as prior to and during loading of the system. These tests and inspections provide assurance that the components and systems have been procured, fabricated, assembled, inspected, tested, and accepted for use under the conditions and controls specified in this document and the Certificate of Compliance.

9.A.1.1 Visual Inspection and Nondestructive Examination

Fabrication, inspection and testing are performed in accordance with the applicable design criteria, codes and standards specified in Section 2.A and on the NAC drawings.

The following fabrication controls and inspections shall be performed to assure compliance with this document and the license drawings:

a) Materials of construction for the UNITAD are identified on the NAC drawings and shall be procured with certification and supporting documentation as required by the ASME Code, Section II [1], when applicable; and the requirements of ASME Code, Section III, Subsection NB [2] and Subsection NG [3], when applicable.

b) Materials and components shall be receipt inspected for visual and dimensional acceptability, material conformance to the applicable Code specification and traceability markings, as applicable. Materials for the UNITAD canister confinement boundary (e.g., shell plates, base plate, closure lid and port covers) shall also be inspected per the requirements of ASME Code, Section III, Subsection NB-2500.

c) The confinement boundary shall be fabricated and inspected in accordance with ASME Code, Section III, Subsection NB, with the code alternatives as listed in Chapter 2, Table 2.1-2. The fuel basket shall be fabricated and inspected in accordance with the ASME Code, Section III, Subsection NG, with the alternatives listed in Table 2.1-2.

d) The steel components of the transfer cask shall be in accordance with ASTM specifications and fabricated in accordance with ANSI N14.6 [11]. Inspections and NDE of the transfer cask shall be in accordance with ASME Code, Section III, Subsection NF.

e) The steel components of the concrete cask shall be in accordance with ASTM specifications and fabricated in accordance with ASME Code, Section VIII [6] or fabrication may be in accordance with ANSI/AWS D1.1. Inspections of the welded steel components of the concrete cask shall be in accordance with ASME Code, Section VIII or ANSI/AWS D1.1.

f) ASME Code welding shall be performed using welders and weld procedures qualified in accordance with ASME Code, Section IX [7] and the ASME Code, Section III subsection applicable to the component (e.g., NB, NG or NF). ANSI/AWS code welding may be performed using welders and procedures qualified in accordance with the applicable AWS requirements or in accordance with ASME Code, Section IX.

g) Construction and inspections of the concrete component of the concrete cask shall be performed in accordance with the applicable sections and requirements of ACI-318 [8].

h) Visual examinations of the welds of the confinement boundary shall be performed in accordance with ASME Code, Section V, Articles 1 and 9 [9], with acceptance per Section III, Subsection NF, Article NF-5360. The final surface of UNITAD canister shell welds shall be dye penetrant examined (PT) in accordance with ASME Code, Section V, Articles 1 and 6, with acceptance per Section III, Subsection NB, Article NB-5350. The UNITAD canister shell longitudinal and circumferential welds shall be radiographic examined (RT) in accordance with ASME Code, Section V, Articles 1 and 2, with acceptance per Section III, Subsection NB, Article NB-5320. The weld of the UNITAD canister baseplate to the UNITAD canister shell shall be ultrasonic examined (UT) in accordance with ASME Code, Section V, Articles 1 and 5, with acceptance per Section III, Subsection NB, Article NB-5330. In accordance with ISG-15 [14], the closure lid to shell weld, performed following fuel loading, shall be dye penetrant (PT) examined at the root, mid-plane and final surface in accordance with ASME Code, Section V, Articles 1 and 6, with acceptance per Section III, Subsection NB, Article NB-5350. The closure ring to canister shell and the closure ring to closure lid welds shall be PT examined in accordance with the same code and acceptance criteria as the closure lid to canister shell weld, except that only the weld final surface will be examined. The inner and outer (redundant) port covers to closure lid welds shall be PT examined at the final surface in accordance with the same code and acceptance criteria as for the closure lid to shell weld. Repairs to UNITAD canister vessel welds shall be performed in accordance with ASME Code, Section III, Subsection NB, Article NB-4450, and the welds re-inspected per the original acceptance criteria applicable to the examination method.

i) Visual examinations of the welds of the fuel basket shall be performed in accordance with ASME Code, Section V, Articles 1 and 9, with acceptance per Section III, Subsection NG, Article NG-5360. Repairs to fuel basket welds shall be performed in accordance with ASME Code, Section III, Subsection NG, Article NG-4450, and the welds re-inspected per the original acceptance criteria applicable to the examination method.

j) Visual examinations of the concrete cask structural steel weldments shall be performed in accordance with the ASME Code, Section V, Articles 1 and 9, or ANS/AWS D1.1, Section 6.9, with acceptance per Section VIII, Division 1, Part UW, Articles UW-35 and UW-36, or Table 6.1 of ANSI/AWS D1.1, respectively. Repairs to concrete cask structural weldment welds shall be performed in accordance with ANSI/AWS D1.1, and the welds reinspected per the original acceptance criteria.

k) Visual examination of the welds of the transfer cask shall be performed in accordance with ASME Code, Section V, Articles 1 and 9, or ANSI/AWS D1.1, Section 6.9, with acceptance per Section III, Subsection NF, Article NF-5360. Following structural load testing of the transfer cask, the final surface of all critical load-bearing welds shall be either dye penetrant (PT) or magnetic particle (MT) examined in accordance with ASME Code, Section V, Articles 1 and 6 for PT and Articles 1 and 7 for MT. The acceptance criteria for the weld examinations shall be in accordance with Section III, Subsection NF, Article NF-5350 for PT and NF-5340 for MT. Repairs to the transfer cask vertical load-bearing welds shall be performed in accordance with ASME Code, Section III, Subsection NF, Article NF-4450 or ANSI/AWS D1.1. Repaired welds shall be re-inspected per the original acceptance criteria applicable to the examination method.

l) Dimensional inspections of components shall be performed in accordance with written and approved procedures to verify compliance to the license drawings and fit-up of individual components. All dimensional inspections and functional fit-up tests shall be documented.

m) All components shall be inspected for cleanliness and proper packaging for shipping in accordance with written and approved procedures. All components will be free of any foreign material, oil, grease, and solvents.

n) Inspection and nondestructive examination personnel shall be qualified in accordance with the requirements of SNT-TC-1A [10].

9.A.1.2 Structural and Pressure Tests

9.A.1.2.1 Load Testing of Transfer Casks

The Transfer Cask is designed, fabricated and tested to the requirements of ANSI N14.6 [11]. The Transfer Cask is provided with two lifting trunnions near the top of the cask for lifting and handling. The trunnion pair is designed for a maximum design lift load of 230,000 pounds. The Transfer Cask shield doors and supporting door rails are designed to retain and support the maximum Canister loaded weight of 118,000 pounds.

Following completion of fabrication, the load-bearing components of the transfer cask, including the lifting trunnions, shield doors and rails, are load tested to verify their structural integrity to lift and retain the applicable loads.

The lifting and handling of the transfer cask and loaded TSC are defined as critical lifting loads per NUREG-0612 [12] at a number of nuclear facilities. In accordance with ANSI N14.6, special lifting devices for critical loads shall be provided with redundant lifting paths, or be designed and tested to higher safety factors. The transfer cask lifting trunnions, shield doors and rails are designed to higher safety factors and are load tested to 300% of the maximum service load for each type of component.

The lifting trunnion pair shall have a load equal to three times their maximum service load applied for a minimum of 10 minutes. Likewise, the Transfer Cask shield doors and rails shall have a load equal to three times their maximum service load applied for a minimum of 10 minutes. After release of the test loads, the accessible portions of the trunnions and the adjacent areas, and the shield doors and rails and adjacent areas shall be visually examined to verify no deformation, distortion or cracking occurred. The critical load-bearing welds of the Transfer Cask shall be examined by the methods and acceptance criteria defined in Section 9.A.1.1, Item k).

Any evidence of deformation, distortion or cracking of the loaded components, critical load-bearing welds or adjacent areas shall be cause for failure of the load test, and repair and/or replacement of the component. Following repair or replacement, the applicable portions of the load test shall be performed again and the components reexamined in accordance with the original procedure and acceptance criteria.

Load testing of the transfer cask shall be performed in accordance with written and approved procedures, and the test results shall be documented.

9.A.1.2.2 Load Testing of Concrete Cask Lifting Lugs and Anchors

The concrete cask is designed to be lifted and transported using two lifting anchors imbedded in the reinforced concrete of the shell. Lifting lugs are bolted to the anchors and provide a pin connection to a lifting system. The concrete lifting anchors, lifting lugs and attachment bolting are designed, fabricated and tested in accordance with the requirements of ANSI N14.6 for lifts not made over safety-related equipment (noncritical lifts).

The concrete cask lifting lug load test shall be performed on the lugs independently of the concrete cask and will consist of applying a vertical load that is equal to 150% of the maximum concrete cask weight. The test load shall be applied for a minimum of 10 minutes. After the release of the test load, the accessible portions of the lifting anchors shall be visually examined to verify no deformation, distortion, or cracking occurred. Critical load-bearing welds of the lifting anchors shall be magnetic particle (MT) examined in accordance with ASME Code, Section V, Articles 1 and 7, with acceptance criteria per Section III, Subsection NF, Article NF-5340, or dye penetrant (PT) examined in accordance with ASME Code, Section V, Articles 1 and 6, with acceptance per Section III, Subsection NF, Article NF-5350.

Any evidence of deformation, distortion or cracking of the loaded components, critical load-bearing welds or adjacent areas shall be cause for failure of the load test, and repair and/or replacement of the affected component(s). Following repair or replacement, the applicable portions of the load test shall be re-performed and the components reexamined in accordance with the original procedure and acceptance criteria.

Load testing of the concrete cask lifting lugs shall be performed in accordance with written and approved procedures, and the test results shall be documented.

9.A.1.2.3 Pressure Testing of the TSC

Following completion of the closure lid-to-TAD shell weld during the UNITAD preparation operations after fuel loading, the UNITAD canister shall be hydrostatically pressure tested in accordance with ASME Code, Section III, Subsection NB, NB-6000 requirements as described in Section 9.1.1. The minimum test pressure of 19 (+3, -0) psig shall be applied and maintained to the drain port connection for a minimum hold period of 10 minutes. The minimum test pressure is 125% of the maximum normal operating pressure (MNOP) of 15 psig. Following the 10-minute hold period, while maintaining the hydrostatic test pressure, a visual examination of the closure lid weld for water leakage is completed. The hydrostatic test is acceptable if the acceptance criteria of no visual indication of water leakage at the closure lid to canister shell weld is met.

9.A.1.3 Leakage Tests

The confinement boundary is defined as the UNITAD canister shell weldment, closure lid, and vent and drain inner port covers. As described in Section 9.A.1.1, Item b), the confinement boundary is designed, fabricated, examined, and tested in accordance with the requirements of

the ASME Code, Section III, Subsection NB, except for the code alternatives listed in Table 2.A.2-2.

Following completion of vessel welding, the Canister shell weldment shall be leakage tested using the evacuated envelope method as described in ASME Code, Section V, Article 10, and ANSI N14.5 to confirm the total leakage rate is less than or equal to 1×10^{-7} ref. cm^3/s at an upstream pressure of 1 atmosphere absolute and a downstream pressure of 0.01 atmosphere absolute, or less. Under these test conditions, this corresponds to a test leakage rate of 2×10^{-7} cm^3/s, helium at standard conditions.

The Canister shell weldment will be closed during the test using a test lid installed over the top of the shell and the cavity evacuated with a vacuum pump to a vacuum of two torr or less. A test envelope will be installed around the Canister enclosing all of the Canister shell confinement welds, evacuated and backfilled to approximately 1 atmosphere absolute with 99.995% (minimum) pure helium. The percentage of helium gas in the test envelope will be accounted for in the determination of the test sensitivity. A Mass Spectrometer Leak Detector (MSLD) is attached to the test lid and samples the evacuated volume for helium. The minimum sensitivity of the helium MSLD and test system shall be less than or equal to 1×10^{-7} cm^3/s, helium, which is one-half of the allowable leakage criteria for leaktight.

If helium leakage is detected, the area of leakage shall be identified and repaired in accordance with the ASME Code, Section III, Subsection NB, NB-4450. The complete helium leakage test shall be performed again to the original test acceptance criteria.

Leakage testing of the Canister shell weldment shall be performed in accordance with written and approved procedures, and the test results documented.

Based on the confinement system materials, welding requirements and inspection methods, and redundant closure design, leakage testing of the closure lid to canister shell is not required. In order to ensure the integrity of the vent and drain inner port cover welds, a helium leakage test of each weld is performed using the evacuated envelope method, as described in ASME Code, Section V, Article 10, and ANSI N14.5. The leakage test is to confirm that the leakage rate for each port cover is $\leq1\times10^{-7}$ ref. cm^3/s, which corresponds to a helium test leakage rate of $\leq2\times10^{-7}$ ref. cm^3/s. Following inner port cover welding, a test bell is installed over the top of the port cover and the test bell volume is evacuated to a low pressure by a helium MSLD system. The minimum sensitivity of the helium MSLD shall be $\leq1\times10^{-7}$ ref. cm^3/s, helium, which is one-half of the allowable leakage criteria for leaktight.

If leakage is detected, the area of leakage shall be identified and repaired in accordance with ASME Code, Section III, Subsection NB, NB-4450. The helium leak test shall be re-performed to the original test acceptance criteria.

9.A.1.4 Component Tests

9.A.1.4.1 Valves, Rupture Discs, and Fluid Transport Devices

The UNITAD system design does not include any rupture discs or fluid transport devices. The closure lid vent and drain openings are each closed by valved quick-disconnect nipples. These nipples are recessed into the closure lid and are used during canister preparation activities to drain, dry, and helium fill the canister cavity. No credit is taken for the ability of the valved nipples to confine radioactive material. After completion of final helium backfill pressure adjustment, the redundant port covers are welded in the vent and drain openings enclosing the valved nipples. The port covers provide the confinement boundary for the vent and drain openings.

9.A.1.4.2 Gaskets

The confinement boundary provided by the welded canister has no mechanical seals or gaskets. The concrete cask may include optional weather seals at the concrete cask lid to cask interface. These gaskets do not provide a safety function and loss of the gaskets during operation would have no effect on the safe operation of the concrete cask. The gaskets are provided to facilitate concrete cask maintenance by minimizing water intrusion into the gasketed area.

9.A.1.5 Shielding Tests

The UNITAD system design is analyzed based on the materials of fabrication and their thickness, using conservative shielding codes to evaluate system dose rates at the system's surface and at selected distances from the surface. The system shield design does not require performance of a shield test.

Following the loading of each UNITAD and its movement to the ISFSI pad, radiological surveys are performed by the system user to establish area access requirements and to confirm that evaluated offsite doses will meet the applicable regulations. These tests are sufficient to identify any significant defect in the shielding effectiveness of the concrete cask.

9.A.1.6 Neutron Absorber Tests

Neutron absorber materials are included in the design and fabrication of the UNITAD fuel basket assembly to assist in the control of reactivity, as described in Chapter 6. Criticality safety is dependent upon the neutron absorber material remaining fixed in position and containing the required amount of uniformly distributed boron. A neutron absorber material for UNITAD is borated stainless steel (BSS), Grade A, in accordance with ASTM 887-89 (2004). The fabrication of the neutron absorber material is controlled to provide a uniform boron distribution and the specified ^{10}B areal density.

9.A.1.6.1 Design/Performance Requirements

The UNITAD system utilizes 0.44 inch minimum thickness plates of borated stainless steel neutron absorber material that are assembled into the individual fuel tubes for each of the storage locations in the fuel basket. The materials and dimensions of the fuel tubes are defined on NAC Drawing 630050-571. The material is called out as a borated stainless steel material that meets the critical characteristics necessary to assure criticality safety. The critical design characteristics of the neutron absorber material are:

- A minimum areal density of 0.017 g/cm^2 ^{10}B
- A uniform distribution of boron
- A yield strength greater than, or equal to, 75 ksi

The required minimum actual ^{10}B loading in a neutron absorber plate is determined based on the effectiveness of the material, i.e., 90% for borated stainless steel. Neutron attenuation testing will be used to verify the areal density and the uniform distribution of ^{10}B in the neutron absorber materials.

9.A.1.6.2 Terminology

Applicable terminology definitions for the neutron absorber materials:

acceptance	tests conducted to determine whether a specific production lot meets selected material properties and characteristics, or both, so that the lot can be accepted for commercial use.
areal density	for plates with flat parallel surfaces, the density of the neutron absorber times the thickness of the material.

designer	the organization responsible for the design or the license holder for the dry cask storage system or transport packaging. The designer is usually the purchaser of the neutron absorber material, either directly or indirectly (through a fabrication subcontractor).
lot	a quantity of a product or material accumulated under conditions that are considered uniform for sampling purposes.
neutron absorber	a nuclide that has a large thermal or epithermal neutron absorption cross-section, or both.
neutron absorber material	the stainless steel material that contains a neutron absorber.
neutron attenuation test	a process in which a material is placed in a thermal neutron beam, and the number of neutrons transmitted through the material in a specified period of time is counted. The observed neutron counting rate may be converted to areal density by performing the same test on a series of calibration standards.
neutron cross-section	a measure of the probability that a neutron will interact with a nucleus; a function of the neutron energy and the structure of the interacting nucleus.
packaging	in transport of radioactive material, the assembly of components necessary to enclose the radioactive contents completely.
qualification	the process of evaluating and testing, or both, a material produced by a specific manufacturing process to demonstrate uniformity and durability for a specific application.

9.A.1.6.3 Inspections

After manufacturing, each plate of neutron absorber material will be visually and dimensionally inspected for damage, embedded foreign material, and dimensional compliance. The neutron absorber plates are intended to be defect/damage free, but limited defects/damages are acceptable. Allowed defects are discussed in each material specification section that follows.

Standard industrial inspections will be performed on the neutron absorber plates to verify the acceptability of physical characteristics such as dimensions, flatness, straightness, tensile properties or other mechanical properties as appropriate. Inspection and testing of the neutron absorber materials will be performed in accordance with written procedures, by appropriately certified personnel, and the inspection and test results will be documented.

9.A.1.6.4 Specification

The UNITAD fuel baskets borated stainless steel fuel tubes are defined on NAC drawing 630050-571 and the basket assembly is shown in NAC Drawing 630050-577. The analysis of the fuel basket does not consider the tensile strength of the neutron absorber material other than that it be sufficient to maintain its form. Environmental conditions encountered by the neutron absorber material may include:

- Immersion in water with the associated chemical, temperature and pressure concerns
- Dissimilar materials
- Gamma and neutron radiation fluence
- Dry heat-up rates
- Maximum temperatures

Except for materials for which validation has been completed, the durability of the neutron absorber materials is validated to demonstrate the following results:

- Neutron absorber materials will not incur significant damage due to the pressure, temperature, radiation, or corrosion environments that may be present in the loading and storage of spent fuel;
- There are no significant changes in mechanical properties of the neutron absorber materials due to the fast neutron fluences experienced in spent fuel storage;
- General corrosion does not have time to affect the integrity of the neutron absorber material due to the very short time of immersion in spent fuel pool water.

Process lots are tested to verify the presence, uniform distribution and minimum areal density (effectiveness) of ^{10}B for the neutron absorber material.

9.A.1.6.4.1 Thermal Conductivity and Yield Strength Testing of Neutron Absorber Material

Thermal Conductivity Testing

Thermal conductivity qualification testing of the neutron absorber materials shall conform to ASTM E1225 [15], ASTM E1461 [16], or an equivalent method. The testing shall be performed at room temperature on test coupons taken from production material. Note that thermal conductivity increases slightly with temperature increases.

Sampling will initially be one test per lot and may be reduced if the first five tests meet the specified minimum thermal conductivity. Additional tests may be performed on the material from a lot whose test result does not meet the required minimum value, but the lot will be rejected if the mean value of the tests does not meet the required minimum value.

Upon completion of 25 tests of a single type of neutron absorber material having the same boron content, further testing may be terminated if the mean value of all of the test results minus two standard deviations meets the specified minimum thermal conductivity.

Yield Strength Testing

Yield strength qualification testing of the neutron absorber shall conform to ASTM Specifications A 370 and/or A 480/A 480M [17, 18].

Additional yield strength qualification testing of neutron absorber material is not required if certified quality-controlled test results (from an NAC approved supplier) that meet the specified minimum yield strength are available as referenced documentation.

9.A.1.6.4.2 Acceptance Testing of Neutron Absorber Material by Neutron Attenuation

Acceptance testing shall be performed to ensure that neutron absorber material properties for plates in a given production run are in compliance with the materials requirements for the UNITAD fuel baskets and that the process is operating in a satisfactory manner.

Statistical tests will be run to augment findings relating to isotopic content, impurity content or uniformity of the ^{10}B distribution.

- Neutron attenuation standards are typically composed of homogeneous boron or boron carbide with any additional materials in the absorber having a very small thermal neutron cross-section (e.g., ZrB2). The borated stainless steel contains a significant quantity of additional material (e.g., iron). The additional elements may influence the direct comparison of borated stainless to the homogeneous absorber. Some of the neutron beam attenuation in borated stainless may be falsely attributed to boron in a direct comparison to the homogeneous absorber. The homogenous absorber should, therefore, be coupled with an equivalent thickness stainless steel (nonborated) when establishing the benchmark, homogeneous absorber, attenuation curve(s).
- The ^{10}B areal density shall be measured using a collimated thermal neutron beam of 1.0 to 2.54 cm diameter.
- Test locations/coupons shall be well distributed throughout the lot of material, particularly in the areas most likely to contain variances in thickness, and shall not contain unacceptable defects that could inhibit accurate physical and test measurements.
- The sampling plan shall require that each of the first 50 plates of neutron absorber material from a lot, or a coupon taken therefrom, be tested. Thereafter, coupons shall be taken from 10 randomly selected plates from each set of 50 plates. This 1 in 5 sampling plan shall continue until there is a change in lot or batch of constituent materials of the plate (i.e., boron powder) or a process change. A measured value less than the required minimum areal density of ^{10}B during the reduced inspection is defined as nonconforming, along with other contiguous plates, and mandates a return to 100% inspection for the next 50 plates. The coupons are indelibly marked and recorded for identification. This identification will be used to document the neutron absorber material test results, which become part of the quality record documentation package.
- The minimum areal density specified shall be verified for each lot at the 95% probability, 95% confidence level (also expressed as 95/95 level) or better. The following illustrates one acceptable method.

  The acceptance criterion for individual plates is determined from a statistical analysis of the test results for that lot. The minimum ^{10}B areal densities determined by neutron attenuation are converted to volume density, i.e., the minimum ^{10}B areal density is divided by the thickness at the location of the neutron attenuation measurement or the maximum thickness of the coupon. The lower tolerance limit of ^{10}B volume density is then determined—defined as the mean value of ^{10}B volume density for the sample, less K times the standard deviation, where K is the one-sided

tolerance limit factor for a normal distribution with 95% probability and 95% confidence.

Finally, the minimum specified value of ^{10}B areal density is divided by the lower tolerance limit of ^{10}B volume density to arrive at the minimum plate thickness that provides the specified ^{10}B areal density.

Any plate that is thinner than this minimum or the minimum design thickness, whichever is greater, shall be treated as nonconforming, with the following exception. Local depressions are acceptable, as long as they total no more than 0.5% of the area on any given plate and the thickness at their location is not less than 90% of the minimum design thickness.

- All neutron absorber material acceptance verification will be conducted in accordance with the NAC International Quality Assurance Program. The neutron absorber material supplier shall control manufacturing in accordance with the key process controls via a documented quality assurance system (approved by NAC or NAC's approved fabricator), and the designer shall verify conformance by reviewing the manufacturing records.
- Nonconforming material shall be evaluated within the NAC International Quality Assurance Program and shall be assigned one of the following dispositions: "Use-As-Is," "Rework/Repair" or "Reject." Only material that is determined to meet all applicable conditions of the license will be accepted.

9.A.1.6.4.3 Qualification Testing of Neutron Absorber Material

Qualification tests for UNITAD System neutron absorber material and its manufacturing processes shall be performed at least once to demonstrate acceptability and durability based on the critical design characteristics, previously defined in this section.

The licensed service life will include a range of environmental conditions associated with short-term transfer operations, normal storage conditions, as well as off-normal and accident storage events. Additional qualification testing is not required for a neutron absorber material previously qualified, i.e., reference can be provided to prior testing with the same, or similar, materials for similar design functions and service conditions.

- Qualification testing is required for: (1) neutron absorber material specifications not previously qualified; (2) neutron absorber material specifications previously qualified, but manufactured by a new supplier; and (3) neutron absorber material specifications

previously qualified, but with changes in key process controls. Key process controls for producing the neutron absorber material used for qualification testing shall be the same as those to be used for commercial production.

- Qualification testing shall demonstrate consistency between lots (2 minimum).
- Environmental conditions qualification will be verified by direct testing or by validation by data on the same, or similar, material, i.e., the neutron absorber material is shown to not undergo physical changes that would preclude the performance of its design functions. Conditions encountered by the neutron absorber material may include: short-term immersion in water, exposure to chemical, temperature, pressure, and gamma and neutron radiation environments. Suppliers' testing will document the durability of neutron absorber materials that may be used in the system by demonstrating that the neutron absorber materials will not incur significant damage due to the pressure, temperature, radiation, or corrosion environments or the short-term water immersion that may occur in the loading and storage of spent fuel.
- Thermal conductivity and yield strength qualification testing shall be as previously described.
- The uniformity of the boron distribution in the material shall be verified by neutron attenuation testing of a statistically significant number of measurements of the areal density at locations distributed throughout the test material production run, i.e., at a minimum from the ends and the middle of the run. The sampling plan must be designed to demonstrate 95/95 compliance with the absorber content requirements. Details on acceptable neutron attenuation testing are previously provided in this section for Acceptance Testing. Alternate test methods may be employed provided they are validated (benchmarked) to neutron attenuation tests.
- One standard deviation of the neutron attenuation test sampling results shall be less than 10% of the sample mean. This requirement provides additional assurance that a consistent product is achieved by the manufacturing process.
- A material qualification report verifying that all design requirements are satisfied shall be prepared.
- Key manufacturing process controls in the form of a complete specification for materials and process controls shall be developed for the neutron absorber material by the supplier and approved by NAC to ensure that the product delivered for use is consistent with the qualified material in all respects that are important to the material's design function.

- Major changes in key manufacturing processes for neutron absorber material shall be controlled by mutually agreed-upon process controls established by the certificate holder/purchaser and the neutron absorber supplier. These process controls will ensure that the neutron absorber delivered will always be consistent with the qualification test material in any and all respects that are important to the neutron absorber's safety characteristics. Changes in the agreed-upon process controls may require requalification of those parts of the qualification that could be affected by the process changes. Typical changes covered by the agreed-upon process controls may include:
  - Changes that could adversely affect mechanical properties (e.g., change in thermal conductivity, porosity, material strength, boron content, increase in the boron content above that used in previously qualified material, etc.);
  - Changes that could affect the uniformity of boron (e.g., change to mixing process for stainless steel and boron powders, change in stirring of melt, change in boron precipitate phase, etc.).
- Minor neutron absorber material processing changes may be determined to be acceptable on the basis of engineering review without additional qualification testing, if such changes do not adversely affect the particle bonding microstructure, i.e., the durability or the uniformity of the boron particle distribution, which is the neutron absorber effectiveness.
- Nonconforming material shall be evaluated within the NAC International Quality Assurance Program and shall be assigned one of the following dispositions: "Use-As-Is," "Rework/Repair" or "Reject." Only material that is determined to meet all applicable conditions of the license will be accepted.

9.A.1.7 Thermal Tests

Thermal acceptance testing of the UNITAD system following fabrication and construction is not required. Continued effectiveness of the heat-rejection capabilities of the system may be monitored during system operation using a remote temperature-monitoring system.

The heat-rejection system consists of convection air cooling where air flow is established and maintained by a chimney effect, with air moving from the lower inlets to the upper outlets. Since this system is passive, and air flow is established by the decay heat of the contents of the canister, it is sufficient to ensure by inspection that the inlet and outlet screens are clear and free

of debris that could impede air flow. Because of the passive design of the heat-rejection system, no thermal testing is required.

9.A.1.8 Cask Identification

Each UNITAD system and concrete cask shall be marked with a model number and an identification number. Each concrete cask will additionally be marked for empty weight and date of loading. Specific marking instructions are provided on the license drawings for these system components.

9.A.2 Maintenance Program

A generic maintenance program is defined in an operations manual, which will be provided to system users. The operations manual will provide instructions for the inspection, testing, and component replacements required to ensure continued safe and effective operation and handling of the UNITAD system. System users will develop site-specific maintenance programs and documents.

The UNITAD system is totally passive by design. There are no active components or systems required to assure the continued performance of its safety functions during storage operations. This results in a minimal inspection and maintenance program for the lifetime of the system. The routine maintenance requirements and schedule are shown in Table 9.A.2-1. As shown in the table, the requirements include concrete surface condition inspections and repairs, and reapplication of corrosion-inhibiting coatings on accessible external carbon steel surfaces.

Maintenance activities for UNITAD shall be performed under the user's approved quality assurance (QA) program. Maintenance activities shall be administratively controlled and the results documented, as required by the QA program.

9.A.2.1 Structural and Pressure Tests

As described and analyzed in this document, there is no credible event leading to the structural failure of the canister resulting in the loss of radioactive material confinement. Therefore, periodic structural or pressure tests on the canister following initial acceptance and loading are not required.

The transfer cask shall be maintained, tested, and inspected in accordance with the routine inspection, maintenance, and annual testing requirements of ANSI N14.6. Prior to each use of the transfer cask, the trunnions and shield door assembly will be inspected for gross damage, adequate lubrication, and proper function. On a maintenance schedule established by the user, the transfer cask corrosion-inhibiting coating will be inspected and repaired in accordance with the coating supplier application procedures. Areas of minor scratching or damage to the coating of the transfer cask found during use may be temporarily repaired using a nuclear grade, pool-compatible grease.

9.A.2.2 Leakage Tests

The UNITAD system confinement boundary is provided by a welded vessel and, as described in Chapters 3 and 11, no credible normal conditions or off-normal or accident events result in a loss of confinement. Therefore, maintenance leakage testing of the canister is not required.

9.A.2.3 Subsystem Maintenance

The UNITAD system does not include any active subsystems that provide safety functions during storage operations. Therefore, no subsystem maintenance is required.

Auxiliary systems used during operations, such as equipment, rigging, and instrumentation used to handle, prepare, and weld the canister or concrete cask, are maintained and calibrated by the users in accordance with their QA program and the safety importance of the auxiliary system, equipment, instrument, or rigging.

9.A.2.4 Shielding Tests

The shielding materials of the canister, concrete cask, and transfer cask are designed for long-term use with negligible degradation over time as a result of normal operations. Chipping, spalling, or other defects of the concrete cask surface shall be identified by periodic visual inspection. Repairs to defects larger than approximately one-inch deep or square shall be performed using grout repair materials applied in accordance with the manufacturer's instructions. Accessible external carbon steel surfaces are inspected periodically to verify the integrity of corrosion-inhibiting coatings. Coatings are reapplied as necessary for the repair of the coating in accordance with manufacturer's instructions.

Table 9.A.2-1 UNITAD Storage System Maintenance Program Schedule

Task	Frequency
Visual inspection and repair or recoating of concrete cask concrete and accessible coated carbon steel surfaces	Periodically during storage operations
Visual inspection of concrete cask identification markings	Annually
Load testing and/or visual and dimensional inspection of the transfer cask	Annually while transfer cask is in operation, or prior to returning to service
Visual inspection and repair or recoating of transfer cask exposed carbon steel surfaces, except on sliding surfaces	Annually while transfer cask is in operation, or prior to returning the transfer cask to service
Visual inspection of transfer cask exposed carbon steel surfaces and temporary repair of coating surfaces using site-approved materials	Quarterly during periods of use
Functional check of transfer cask sliding parts to verify adequate lubrication	Each use
Functional check of transfer cask inflatable seals to confirm operability	Each use

THIS PAGE INTENTIONALLY LEFT BLANK

9.A.3 References

1. ASME Boiler and Pressure Vessel Code, Section II, Part A & Part B, "Materials," American Society of Mechanical Engineers, New York, NY, 2004 Edition with 2006 Addenda.
2. ASME Boiler and Pressure Vessel Code, Section III, Subsection NB, "Class 1 Components," American Society of Mechanical Engineers, New York, NY, 2004 Edition with 2006 Addenda.
3. ASME Boiler and Pressure Vessel Code, Section III, Subsection NG, "Core Support Structures," American Society of Mechanical Engineers, New York, NY, 2004 Edition with 2006 Addenda.
4. ASME Boiler and Pressure Vessel Code, Section III, Subsection NF, "Supports," American Society of Mechanical Engineers, New York, NY, 2004 Edition with 2006 Addenda.
5. ANSI/AWS D1.1, "Structural Welding Code – Steel," American National Standards Institute, Inc., Washington, DC, 2006.
6. ASME Boiler and Pressure Vessel Code, Section VIII, Part UW, "Pressure Vessels Fabricated by Welding," American Society of Mechanical Engineers, New York, NY, 2004 Edition with 2006 Addenda.
7. ASME Boiler and Pressure Vessel Code, Section IX, "Qualification Standard for Welding and Brazing Procedures, Welders, Brazers, and Welding and Brazing Operators," American Society of Mechanical Engineers, New York, NY, 2004 Edition with 2006 Addenda.
8. ACI 318 "Building Code Requirements for Structural Concrete,", American Concrete Institute, Farmington Hills, MI, 2008.
9. ASME Boiler and Pressure Vessel Code, Section V, "Nondestructive Examination," American Society of Mechanical Engineers, New York, NY, 2004 Edition with 2006 Addenda.
10. Recommended Practice SNT-TC-1A, "Nondestructive Testing", American Society for Nondestructive Testing, Columbus, OH, edition as invoked by the applicable ASME Code.
11. ANSI N14.6-1993, "American National Standard for Radioactive Materials – Special Lifting Devices for Shipping Containers Weighing 10,000 Pounds (4,500 kg) or More," American National Standards Institute, Inc., Washington, DC, June 1993.
12. NUREG-0612, "Control of Heavy Loads at Nuclear Power Plants," US Nuclear Regulatory Commission, Washington, DC, July 1980.
13. TR-017218-R1, EPRI Guideline for Sampling in the Commercial Grade Item Acceptance Process, Final Report, January 1999.
14. ISG-15, "Materials Evaluation," US Nuclear Regulatory Commission, Washington, DC, Revision 0, January 10, 2001.

15. ASTM Standard E1225[a], "Test Method for Thermal Conductivity of Solids by Means of the Guarded-Comparative-Longitudinal Heat Flow Technique."
16. ASTM Standard E1461[a], "Test Method for Thermal Diffusivity of Solids by the Flash Method."
17. ASTM Standard A 370[a], "Standard Test Methods and Definitions for Mechanical Testing of Steel Products."
18. ASTM Standard A 480/A 480M[a], "Standard Specification for General Requirements for Flat-Rolled Stainless and Heat-Resisting Steel Plate, Sheet, and Strip."

[a] Current edition of testing standards at time of testing is to be used.

Table of Contents

10.0 RADIATION PROTECTION 10.1-1

10.1 Ensuring that Occupational Radiation Exposures Are As Low As Is Reasonably Achievable (ALARA) 10.1-1
10.1.1 Policy Considerations 10.1-1
10.1.2 Design Considerations 10.1-1
10.1.3 Operational Considerations 10.1-2

10.2 Radiation Protection Design Features 10.2-1
10.2.1 Design Basis for Normal Storage Conditions 10.2-1
10.2.2 Design Basis for Accident Conditions 10.2-2

10.3 Estimated On-Site Collective Dose Assessment 10.3-1
10.3.1 Estimated Collective Dose for Loading a Single Universal Storage System 10.3-1
10.3.2 Estimated Annual Dose Due to Routine Operations 10.3-2

10.4 Exposure to the Public 10.4-1

10.5 Radiation Protection Evaluation for Site Specific Spent Fuel 10.5-1
10.5.1 Radiation Protection Evaluation for Maine Yankee Site Specific Spent Fuel 10.5-1

10.6 References 10.6-1

Appendix 10.A RADIATION PROTECTION UNITAD Storage System 10.A-i

List of Figures

Figure 10.3-1 Typical ISFSI 20 Cask Array Layout 10.3-4
Figure 10.4-1 SKYSHINE Exposures from a Single Cask Containing Design Basis PWR Fuel 10.4-3
Figure 10.4-2 SKYSHINE Exposures from a Single Cask Containing Design Basis BWR Fuel 10.4-4

List of Tables

Table 10.3-1 Estimated Exposure for Operations Using the Standard Transfer Cask 10.3-5
Table 10.3-2 Assumed Contents Cooling Time of the Vertical Concrete Casks Depicted in the Typical ISFSI Array 10.3-6
Table 10.3-3 Vertical Concrete Cask Radiation Spectra Weighting Factors 10.3-7
Table 10.3-4 Estimate of Annual Exposure for the Operation and Surveillance of a Single PWR Cask 10.3-8
Table 10.3-5 Estimate of Annual Exposure for the Operation and Surveillance of a 20-Cask Array of PWR Casks 10.3-8
Table 10.3-6 Estimate of Annual Exposure for the Operation and Surveillance of a Single BWR Cask 10.3-9
Table 10.3-7 Estimate of Annual Exposure for the Operation and Surveillance of a 20-Cask Array of BWR Casks 10.3-9
Table 10.4-1 Dose Versus Distance for a Single Cask Containing Design Basis PWR or BWR Fuel 10.4-5
Table 10.4-2 Annual Exposures from a 2×10 Cask Array Containing Design Basis PWR or BWR Fuel 10.4-5

Appendix 10.A RADIATION PROTECTION
UNITAD Storage System

Table of Contents 10.A-i
List of Tables 10.A-i

Table of Contents

10.A RADIATION PROTECTION FOR THE UNITAD STORAGE SYSTEM 10.A.1-1

10.A.1 Ensuring that Occupational Radiation Exposures Are As Low As Reasonably Achievable (ALARA) 10.A.1-1

10.A.1.1 Policy Considerations 10.A.1-1

10.A.1.2 Design Considerations 10.A.1-1

10.A.1.3 Operational Considerations 10.A.1-2

10.A.2 Radiation Protection Design Features of the UNITAD Storage System 10.A.2-1

10.A.3 Estimated On-Site Collective Dose Assessment for the UNITAD Storage System 10.A.3-1

10.A.3.1 Estimated Dose Due to Loading Operations 10.A.3-1

10.A.3.2 Estimated Dose Due to Routine Operations 10.A.3-2

10.A.4 Exposure to the Public from the UNITAD Storage System 10.A.4-1

10.A.5 References 10.A.5-1

List of Tables

Table 10.A.3-1 Estimated Person-mrem Exposure for Loading Operations 10.A.3-4

Table 10.A.3-2 Estimate of Annual Exposure Due to Routine Operations for a 20-Cask Array 10.A.3-5

THIS PAGE INTENTIONALLY LEFT BLANK

10.A RADIATION PROTECTION FOR THE UNITAD STORAGE SYSTEM

10.A.1 Ensuring that Occupational Radiation Exposures Are As Low As Reasonably Achievable (ALARA)

The UNITAD Storage System provides radiation protection for cask system operations to minimize the exposure of operations personnel to radiation or radioactive materials. The components of the system that require operation, maintenance and inspection are designed to minimize radiation exposure to personnel.

10.A.1.1 Policy Considerations

The UNITAD Storage System is designed so that operation, inspection, repair and maintenance can be carried out while maintaining occupational exposure As Low As Reasonably Achievable (ALARA).

10.A.1.2 Design Considerations

When used in accordance with its design, the UNITAD Storage System maintains occupational radiation exposures ALARA while meeting overall system performance objectives. The following specific design features demonstrate the ALARA philosophy.

- Material selection and surface preparation that facilitate decontamination.
- A basket configuration that allows Canister loading using accepted standard practices.
- Positive clean water flow in the Transfer Cask/Canister annulus to minimize the potential for contamination of the Canister surface during in-pool loading.
- Passive confinement, thermal, criticality and shielding systems that require no maintenance.
- Thick steel and concrete shells in the Concrete Cask, and a steel/lead/neutron shield/steel configuration in the Transfer Cask.
- Nonplanar cooling air pathways with respect to the spent fuel assembly source regions to minimize radiation streaming at the Concrete Cask inlets and outlets.
- Optional use of remote, automated outlet air temperature measurement to reduce surveillance time.

10.A.1.3 Operational Considerations

The ALARA philosophy is incorporated into the procedural steps necessary to operate the UNITAD Storage System in accordance with its design. The following features or actions, which comprise a baseline radiological controls approach, have been incorporated in the design or procedures to minimize occupational radiation exposure.

- Use of a prefabricated weld shield as a base for the welding system during welding equipment setup, removal, welding, and weld inspection of the closure lid, closure ring, and port covers. The weld shield is used during the Canister closing and sealing operations.
- Use of remote manual or automatic equipment for welding the closure lid and closure ring.
- Decontamination of the exterior surface of the Transfer Cask, welding of the closure lid, and pressure testing of the Canister while the Canister remains filled with water. (Personnel exposures reported in this chapter are based on a conservative dry Canister shielding evaluation.)
- Use of quick-disconnect fittings at penetrations to facilitate auxiliary service connections.
- Use of remote-handling equipment, where practical, to reduce radiation exposure.

The operational procedures and ALARA practices at a particular facility will be determined by the user's operational conditions and facilities.

10.A.2 Radiation Protection Design Features of the UNITAD Storage System

The detailed description of the UNITAD Storage System radiation shielding design is provided in Appendix A. 5. The principal radiation protection design features are the shielding necessary to meet the design objectives, the placement of penetrations near the edge of the Canister lid to reduce operator exposure and improve access, and the use of the weld shield for work on and around the closure lid. Use of the weld shield reduces operator exposure during the welding, inspection, draining, drying and helium backfilling operations.

Radiation exposure rates at various work locations were determined with the MCNP5 code within the vicinity of a single Transfer and Concrete Cask and the NAC-CASC (a modified SKYSHINE-III version) code for the Concrete cask array. These codes generated bounding dose rate profiles at various distances from the Transfer and Concrete Casks, which are used to estimate the operator exposures for loading and routine operations.

THIS PAGE INTENTIONALLY LEFT BLANK

10.A.3 Estimated On-Site Collective Dose Assessment for the UNITAD Storage System

Operations personnel exposure estimates are based on identifying the operational cask sequence, estimating the duration and number of personnel required to perform the tasks, determining the location of the personnel in relation to the cask, and multiplying the dose rates at the particular task location by the number of personnel and the task duration. The operational tasks identified are based on the UNITAD Storage System operating procedures in Appendix 8.A and operational experiences in loading other canister-based systems.

A collective dose estimate is provided for placing a single Concrete Cask on the ISFSI, and for exposures related to routine storage operations of a 20-cask (2×10 array) ISFSI. Each cask in the array is assumed to be loaded with the contents that produce the maximum dose rate.

The personnel exposure estimates associated with loading and routine operations are presented in Table 10.A.3-1 and Table 10.A.3-2. The estimated durations, task sequences, and personnel requirements are based on the UNITAD Storage System design features, operational experiences in loading systems of similar design, and operational and equipment improvements based on previous experience. These estimates are provided to allow the user to perform ALARA evaluations on UNITAD Storage System implementation and use, and to establish personnel exposure guidelines for operating personnel. For each user, the site-specific design features, location and configuration of work stations, equipment staging, standard practices, operating crew size, use of temporary shielding, etc., will result in personnel exposures that may be higher or lower than those presented.

10.A.3.1 Estimated Dose Due to Loading Operations

The estimated dose due to loading operations considers the collective dose due to the loading, closure, transfer, and placement of a single Canister containing bounding fuel assembly contents. This analysis assumes that the exposure incurred by the operators is independent of background radiation, as background will vary with site conditions. A two mrem/hr dose rate is assigned to tasks not performed within four meters of the equipment or component surface. An example for these tasks is the monitoring of the operation of the welding system using cameras. This task may be performed at more than four meters from the cask body, and behind significant auxiliary shielding. The number of persons allocated to task completion is generally the minimum number of actual operators required for the task and excludes supervisory, health physics, security, and other nonoperating personnel.

Area dose rates are assigned based on the orientation of the worker(s) with respect to the source for a given operational task or sequence. Exposure estimates are shown in Table 10.A.3-1. The number of individual tasks required for loading and transfer of the Canister is collapsed to eight groups for this presentation. Dose rates shown are time-averaged values across the individual subtasks. Activities 7 and 8 of Table 10.A.3-1 include a crane operator who is considered to be outside of the radiation zone around the cask. Exposures due to loading operations are based on design basis casks loaded with 25 kW heat loads.

10.A.3.2 Estimated Dose Due to Routine Operations

Once the Concrete Cask is in storage at the ISFSI, limited ongoing maintenance and surveillance will be required. The annual dose evaluations presented herein consider the tasks that are anticipated to be representative of an operational facility. Exposure due to certain events, such as clearing the material blocking the air vents, is taken into account.

Routine operations may include the following.

- An optional daily electronic measurement of ambient air and outlet air temperatures for each Canister in service. Outlet temperature measurements are recorded at a location away from the cask array, and operators are not expected to incur dose as a result of the temperature measurement.
- An optional inspection of the Concrete cask inlet and outlet screens to verify that they are unobstructed. The time required to perform the inspection, and the expected dose, will be site-specific due to ISFSI pad dimensions and configurations, the concrete cask array, distance of the inspector, etc.
- A daily inspection of the security fence and equipment surrounding the ISFSI storage area. This surveillance is assumed to require 15 minutes and is performed by one security officer.
- Radiological surveillance. The surveillance consists of a radiological survey comprised of a surface radiation measurement on each cask, the determination and/or verification of general area exposure rates and radiological postings. This surveillance is assumed to require 30 minutes, and be performed quarterly by one health physics technician.
- Annual visual inspection of the general condition of the Concrete casks. This inspection is estimated to require 10 minutes per cask and require one technician. For each cask, three minutes of health physics support is also included.
- Corrective maintenance. As the UNITAD Storage System is a passively cooled and shielded system, no significant maintenance is expected over the lifetime of the IFSFI. To account for activities such as minor concrete repairs, air inlet and outlet cleaning, or

- temperature-monitoring equipment replacement, 10% of the array is assumed to require maintenance each year. Maintenance exposure is evaluated based on two operators for 30 minutes each and one health physics technician for 10 minutes.
- Grounds maintenance performed twice a month by one maintenance technician. Grounds maintenance is assumed to require 60 minutes.

Storage operation exposures for a 2×10 array of Concrete Casks loaded with Canisters containing bounding fuel assembly sources are presented in Table 10.A.3-2. ISFSI exposures are based on design basis casks loaded with 25 kW heat loads.

Table 10.A.3-1 Estimated Person-mrem Exposure for Loading Operations

	Description	Exposure Duration (min)	Average Dose Rate (mrem/hr)	Exposure (mrem)
1	Fuel Assembly Loading and Transfer Cask Removal from Pool	548	3.1	56
2	HP Survey and Decon Top of TSC/Transfer Cask	30	58.0	29
3	Install Weld Shield/Weld Machine, and Perform Partial Drain of TSC	45	36.0	27
4	Perform Closure Lid and Ring Welding and PT Exams, Hydrostatically Test TSC	480	49.5	396
5	Drain TSC and Decontaminate Transfer Cask	230	29.5	113
6	Dry TSC Cavity, Backfill/Pressure TSC, Install Port Covers, Weld and Inspect Covers, Remove Weld Shield/Weld Machine, and Survey Cask/TSC Surfaces	505	35.6	300
7	Install Hoist Rings, Place Transfer Cask on Concrete Cask, Transfer TSC, Install Concrete Cask Lid, and Perform HP Survey	220	94	689
8	Move Concrete Cask to ISFSI, Position Concrete Cask on ISFSI Pad, and Install/Connect Screens and Temperature Measuring System	180	5.0	30
	Total			**1640**

Table 10.A.3-2 Estimate of Annual Exposure Due to Routine Operations for a 20-Cask Array

Activity	Location	# of Casks	Frequency (/year)	Time (min)	Dose Rate (mrem/hr)	# of Personnel	Exposure (mrem)
Security Surveillance	Outside Fence	Array	365	15	2.0	1	183
Radiological Surveillance	4 m	Array	4	30	6.1	1	12
Annual Inspection	1 m	20	1	10	11.1	1	37
Radiological Support	1 m	20	1	3	11.1	1	11
Corrective Maintenance	1 ft	2	1	30	12.0	2	24
Radiological Support	1 m	2	1	10	11.1	1	4
Grounds Maintenance	Outside Fence	Array	26	60	2.0	1	52
Total Person-mrem for the Array							323
Total Person-mrem - Average Dose Per Cask							**16**

THIS PAGE INTENTIONALLY LEFT BLANK

10.A.4 Exposure to the Public from the UNITAD Storage System

Appendix 5.A presents the detailed controlled area boundary evaluations. The UNITAD Storage System dose contribution to public exposure at the controlled area boundary is due to direct gamma and neutron radiation emitted from the cask surfaces. When assembled in accordance with the operating procedures, the Canister is leaktight and, therefore, does not release radionuclides from the Canister interior. External surface contamination limits applied to the system assure that no significant public exposure results from particulate release from the system surfaces.

THIS PAGE INTENTIONALLY LEFT BLANK

10.A.5 References

The UNITAD Storage System references are the same as those for the NAC-UMS® Storage System in FSAR Section 10.6, except that ASME Boiler and Pressure Vessel Code, 2004 Edition, will be used.

THIS PAGE INTENTIONALLY LEFT BLANK

Table of Contents

11.0 ACCIDENT ANALYSES 11-1
11.1 Off-Normal Events 11.1.1-1
11.1.1 Severe Ambient Temperature Conditions (106°F and -40°F) 11.1.1-1
11.1.1.1 Cause of Severe Ambient Temperature Event 11.1.1-1
11.1.1.2 Detection of Severe Ambient Temperature Event 11.1.1-1
11.1.1.3 Analysis of Severe Ambient Temperature Event 11.1.1-1
11.1.1.4 Corrective Actions 11.1.1-2
11.1.1.5 Radiological Impact 11.1.1-2
11.1.2 Blockage of Half of the Air Inlets 11.1.2-1
11.1.2.1 Cause of the Blockage Event 11.1.2-1
11.1.2.2 Detection of the Blockage Event 11.1.2-1
11.1.2.3 Analysis of the Blockage Event 11.1.2-1
11.1.2.4 Corrective Actions 11.1.2-2
11.1.2.5 Radiological Impact 11.1.2-2
11.1.3 Off-Normal Canister Handling Load 11.1.3-1
11.1.3.1 Cause of Off-Normal Canister Handling Load Event 11.1.3-1
11.1.3.2 Detection of Off-Normal Canister Handling Load Event 11.1.3-1
11.1.3.3 Analysis of Off-Normal Canister Handling Load Event 11.1.3-1
11.1.3.4 Corrective Actions 11.1.3-3
11.1.3.5 Radiological Impact 11.1.3-3
11.1.4 Failure of Instrumentation 11.1.4-1
11.1.4.1 Cause of Instrumentation Failure Event 11.1.4-1
11.1.4.2 Detection of Instrumentation Failure Event 11.1.4-1
11.1.4.3 Analysis of Instrumentation Failure Event 11.1.4-1
11.1.4.4 Corrective Actions 11.1.4-2
11.1.4.5 Radiological Impact 11.1.4-2
11.1.5 Small Release of Radioactive Particulate From the Canister Exterior 11.1.5-1
11.1.5.1 Cause of Radioactive Particulate Release Event 11.1.5-1
11.1.5.2 Detection of Radioactive Particulate Release Event 11.1.5-1
11.1.5.3 Analysis of Radioactive Particulate Release Event 11.1.5-1
11.1.5.4 Corrective Actions 11.1.5-2
11.1.5.5 Radiological Impact 11.1.5-2

Table of Contents (continued)

11.1.6 Off-Normal Events Evaluation for Site Specific Spent Fuel 11.1.6-1
11.1.6.1 Off-Normal Events Evaluation for Maine Yankee Site Specific Spent Fuel 11.1.6-1
11.2 Accidents and Natural Phenomena 11.2-1
11.2.1 Accident Pressurization 11.2.1-1
11.2.1.1 Cause of Pressurization 11.2.1-1
11.2.1.2 Detection of Accident Pressurization 11.2.1-1
11.2.1.3 Analysis of Accident Pressurization 11.2.1-1
11.2.1.4 Corrective Actions 11.2.1-3
11.2.1.5 Radiological Impact 11.2.1-3
11.2.2 Failure of All Fuel Rods With a Ground Level Breach of the Canister 11.2.2-1
11.2.3 Fresh Fuel Loading in the Canister 11.2.3-1
11.2.3.1 Cause of Fresh Fuel Loading 11.2.3-1
11.2.3.2 Detection of Fresh Fuel Loading 11.2.3-1
11.2.3.3 Analysis of Fresh Fuel Loading 11.2.3-1
11.2.3.4 Corrective Actions 11.2.3-2
11.2.3.5 Radiological Impact 11.2.3-2
11.2.4 24-Inch Drop of Vertical Concrete Cask 11.2.4-1
11.2.4.1 Cause of 24-Inch Cask Drop 11.2.4-1
11.2.4.2 Detection of 24-Inch Cask Drop 11.2.4-1
11.2.4.3 Analysis of 24-Inch Cask Drop 11.2.4-2
11.2.4.4 Corrective Actions 11.2.4-12
11.2.4.5 Radiological Impact 11.2.4-12
11.2.5 Explosion 11.2.5-1
11.2.5.1 Cause of Explosion 11.2.5-1
11.2.5.2 Analysis of Explosion 11.2.5-1
11.2.5.3 Corrective Actions 11.2.5-1
11.2.5.4 Radiological Impact 11.2.5-1
11.2.6 Fire Accident 11.2.6-1
11.2.6.1 Cause of Fire 11.2.6-1
11.2.6.2 Detection of Fire 11.2.6-1
11.2.6.3 Analysis of Fire 11.2.6-1

Table of Contents (continued)

11.2.6.4 Corrective Actions 11.2.6-3
11.2.6.5 Radiological Impact 11.2.6-3
11.2.7 Maximum Anticipated Heat Load (133°F Ambient Temperature) 11.2.7-1
1.2.7.1 Cause of Maximum Anticipated Heat Load 11.2.7-1
11.2.7.2 Detection of Maximum Anticipated Heat Load 11.2.7-1
11.2.7.3 Analysis of Maximum Anticipated Heat Load 11.2.7-1
11.2.7.4 Corrective Actions 11.2.7-2
11.2.7.5 Radiological Impact 11.2.7-2
11.2.8 Earthquake Event 11.2.8-1
11.2.8.1 Cause of the Earthquake Event 11.2.8-1
11.2.8.2 Earthquake Event Analysis 11.2.8-1
11.2.8.3 Corrective Actions 11.2.8-11
11.2.8.4 Radiological Impact 11.2.8-11
11.2.9 Flood 11.2.9-1
11.2.9.1 Cause of Flood 11.2.9-1
11.2.9.2 Analysis of Flood 11.2.9-1
11.2.9.3 Corrective Actions 11.2.9-5
11.2.9.4 Radiological Impact 11.2.9-5
11.2.10 Lightning Strike 11.2.10-1
11.2.10.1 Cause of Lightning Strike 11.2.10-1
11.2.10.2 Detection of Lightning Strike 11.2.10-1
11.2.10.3 Analysis of the Lightning Strike Event 11.2.10-1
11.2.10.4 Corrective Actions 11.2.10-4
11.2.10.5 Radiological Impact 11.2.10-4
11.2.11 Tornado and Tornado Driven Missiles 11.2.11-1
11.2.11.1 Cause of Tornado and Tornado Driven Missiles 11.2.11-1
11.2.11.2 Detection of Tornado and Tornado Driven Missiles 11.2.11-1
11.2.11.3 Analysis of Tornado and Tornado Driven Missiles 11.2.11-1
11.2.11.4 Corrective Actions 11.2.11-13
11.2.11.5 Radiological Impact 11.2.11-13
11.2.12 Tip-Over of Vertical Concrete Cask 11.2.12-1
11.2.12.1 Cause of Cask Tip-Over 11.2.12-1
11.2.12.2 Detection of Cask Tip-Over 11.2.12-1
11.2.12.3 Analysis of Cask Tip-Over 11.2.12-1
11.2.12.4 Analysis of Canister and Basket for Cask Tip-Over Event 11.2.12-11

Table of Contents (continued)

11.2.12.5 Corrective Actions 11.2.12-71
11.2.12.6 Radiological Impact 11.2.12-71
11.2.13 Full Blockage of Vertical Concrete Cask Air Inlets and Outlets 11.2.13-1
11.2.13.1 Cause of Full Blockage 11.2.13-1
11.2.13.2 Detection of Full Blockage 11.2.13-1
11.2.13.3 Analysis of Full Blockage 11.2.13-1
11.2.13.4 Corrective Actions 11.2.13-2
11.2.13.5 Radiological Impact 11.2.13-2
11.2.14 Canister Closure Weld Evaluation 11.2.14-1
11.2.15 Accident and Natural Phenomena Events Evaluation for Site Specific Spent Fuel 11.2.15-1
11.2.15.1 Accident and Natural Phenomena Events Evaluation for Maine Yankee Site Specific Spent Fuel 11.2.15-1
11.2.16 Fuel Rods Structural Evaluation for Burnup to 60,000 MWd/MTU 11.2.16-1
11.2.16.1 PWR Fuel Rod Evaluation 11.2.16-1
11.2.16.2 Thermal Evaluation of Fuel Rods 11.2.16-10
11.3 References 11.3-1

Appendix 11.A ACCIDENT ANALYSIS UNITAD Storage System 11.A-i

List of Figures

Figure 11.1.1-1 Concrete Temperature (°F) for Off-Normal Storage Condition 106°F Ambient Temperature (PWR Fuel) 11.1.1-3
Figure 11.1.1-2 Vertical Concrete Cask Air Temperature (°F) Profile for Off-Normal Storage Condition 106°F Ambient Temperature (PWR) Fuel) 11.1.1-4
Figure 11.1.1-3 Concrete Temperature (°F) for Off-Normal Storage Condition -40°F Ambient Temperature (PWR Fuel) 11.1.1-5
Figure 11.1.1-4 Vertical Concrete Cask Air Temperature (°F) Profile for Off-Normal Storage Condition -40°F Ambient Temperature (PWR Fuel) 11.1.1-6
Figure 11.1.3.1-1 Canister and Basket Finite Element Model 11.1.3-4
Figure 11.2.4-1 Concrete Cask Base Weldment 11.2.4-13
Figure 11.2.4-2 Concrete Cask Base Weldment Finite Element Model 11.2.4-14
Figure 11.2.4-3 Strain Rate Dependent Stress-Strain Curves for Concrete Cask Base Weldment Structural Steel 11.2.4-15
Figure 11.2.4-4 Acceleration Time-History of the Canister Bottom During the Concrete Cask 24-Inch Drop Accident With Static Strain Properties 11.2.4-16
Figure 11.2.4-5 Acceleration Time-History of the Canister Bottom During the Concrete Cask 24-Inch Drop Accident With Strain Rate Dependent Properties 11.2.4-17
Figure 11.2.4-6 Quarter Model of the PWR Basket Support Disk 11.2.4-18
Figure 11.2.4-7 Quarter Model of the BWR Basket Support Disk 11.2.4-19
Figure 11.2.4-8 Canister Finite Element Model for 60g Bottom End Impact 11.2.4-20
Figure 11.2.4-9 Identification of the Canister Sections for the Evaluation of Canister Stresses due to a 60g Bottom End Impact 11.2.4-21
Figure 11.2.6-1 Temperature Boundary Condition Applied to the Nodes of the Inlet for the Fire Accident Condition 11.2.6-4
Figure 11.2.11-1 Principal Dimensions and Moment Arms Used in Tornado Evaluation 11.2.11-14
Figure 11.2.12.4.1-1 Basket Drop Orientations Analyzed for Tip-Over Conditions – PWR 11.2.12-27
Figure 11.2.12.4.1-2 Fuel Basket/Canister Finite Element Model – PWR 11.2.12-28
Figure 11.2.12.4.1-3 Fuel Basket/Canister Finite Element Model – Canister 11.2.12-29
Figure 11.2.12.4.1-4 Fuel Basket/Canister Finite Element Model – Support Disk – PWR 11.2.12-30

List of Figures (continued)

Figure 11.2.12.4.1-5 Fuel Basket/Canister Finite Element Model – Support Disk Loading – PWR 11.2.12-31
Figure 11.2.12.4.1-6 Canister Section Stress Locations 11.2.12-32
Figure 11.2.12.4.1-7 Support Disk Section Stress Locations – PWR – Full Model 11.2.12-33
Figure 11.2.12.4.1-8 PWR – 109.7 Hz Mode Shape 11.2.12-34
Figure 11.2.12.4.1-9 PWR – 370.1 Hz Mode Shape 11.2.12-35
Figure 11.2.12.4.1-10 PWR – 371.1 Hz Mode Shape 11.2.12-36
Figure 11.2.12.4.2-1 Fuel Basket Drop Orientations Analyzed for Tip-Over Condition - BWR 11.2.12-54
Figure 11.2.12.4.2-2 Fuel Basket/Canister Finite Element Model - BWR 11.2.12-55
Figure 11.2.12.4.2-3 Fuel Basket/Canister Finite Element Model - Support Disk - BWR 11.2.12-56
Figure 11.2.12.4.2-4 Support Disk Section Stress Locations - BWR - Full Model 11.2.12-57
Figure 11.2.12.4.2-5 BWR – 79.3 Hz Mode Shape 11.2.12-58
Figure 11.2.12.4.2-6 BWR – 80.2 Hz Mode Shape 11.2.12-59
Figure 11.2.12.4.2-7 BWR – 210.9 Hz Mode Shape 11.2.12-60
Figure 11.2.13-1 PWR Configuration Temperature History-All Vents Blocked 11.2.13-3
Figure 11.2.13-2 BWR Configuration Temperature History-All Vents Blocked 11.2.13-3
Figure 11.2.15.1.2-1 Two-Dimensional Support Disk Model 11.2.15-9
Figure 11.2.15.1.2-2 PWR Basket Impact Orientations and Case Study Loading Positions for Maine Yankee Consolidated Fuel 11.2.15-10
Figure 11.2.15.1.5-1 Two-Dimensional Beam Finite Element Model for Maine Yankee Fuel Rod 11.2.15-27
Figure 11.2.15.1.5-2 Mode Shape and First Buckling Shape for the Maine Yankee Fuel Rod 11.2.15-28
Figure 11.2.15.1.6-1 Two-Dimensional Beam Finite Element Model for a Fuel Rod with a Missing Grid 11.2.15-34
Figure 11.2.15.1.6-2 Modal Shape and First Buckling Mode Shape for a Fuel Rod with a Missing Grid 11.2.15-35
Figure 11.2.16-1 Three-Dimensional ANSYS Finite Element Model for UMS® Fuel Rod 11.2.16-7
Figure 11.2.16-2 Typical Three-Dimensional LS-DYNA Model for UMS® Fuel with a 1.23-Inch Bow 11.2.16-8
Figure 11.2-16-3 ANSYS Model for the PWR Fuel Rod High Burnup Condition 11.2.16-9

List of Tables

Table 11.1.2-1 Component Temperatures (°F) for Half of Inlets Blocked Off-Normal Event 11.1.2-3
Table 11.1.3-1 Canister Off-Normal Handling (No Internal Pressure) Primary Membrane (P_m) Stresses (ksi) 11.1.3-5
Table 11.1.3-2 Canister Off-Normal Handling (No Internal Pressure) Primary Membrane plus Bending ($P_m + P_b$) Stresses (ksi) 11.1.3-6
Table 11.1.3-3 Canister Off-Normal Handling plus Normal/Off-Normal Internal Pressure (15 psig) Primary Membrane (P_m) Stresses (ksi) 11.1.3-7
Table 11.1.3-4 Canister Off-Normal Handling plus Normal/Off-Normal Internal Pressure (15 psig) Primary Membrane plus Bending ($P_m + P_b$) Stresses (ksi) 11.1.3-8
Table 11.1.3-5 Canister Off-Normal Handling plus Normal/Off-Normal Internal Pressure (15 psig) Primary plus Secondary (P + Q) Stresses (ksi) 11.1.3-9
Table 11.1.3-6 P_m Stresses for PWR Support Disk Off-Normal Conditions (ksi) ... 11.1.3-10
Table 11.1.3-7 $P_m + P_b$ Stresses for PWR Support Disk Off-Normal Conditions (ksi) 11.1.3-11
Table 11.1.3-8 $P_m + P_b$ + Q Stresses for PWR Support Disk Off-Normal Conditions (ksi) 11.1.3-12
Table 11.1.3-9 P_m Stresses for BWR Support Disk Off-Normal Conditions (ksi) 11.1.3-13
Table 11.1.3-10 $P_m + P_b$ Stresses for BWR Support Disk Off-Normal Conditions (ksi) 11.1.3-14
Table 11.1.3-11 $P_m + P_b$ + Q Stresses for BWR Support Disk Off-Normal Conditions (ksi) 11.1.3-15
Table 11.1.3-12 Summary of Maximum Stresses for PWR and BWR Fuel Basket Weldments - Off-Normal Condition (ksi) 11.1.3-16
Table 11.2.1-1 Canister Accident Internal Pressure (65 psig) Only Primary Membrane (P_m) Stresses (ksi). 11.2.1-4
Table 11.2.1-2 Canister Accident Internal Pressure (65 psig) Only Primary Membrane plus Bending ($P_m + P_b$) Stresses (ksi) 11.2.1-5
Table 11.2.1-3 Canister Normal Handling plus Accident Internal Pressure (65 psig) Primary Membrane (P_m) Stresses (ksi). 11.2.1-6

List of Tables (continued)

Table 11.2.1-4 Canister Normal Handling plus Accident Internal Pressure (65 psig) Primary Membrane plus Bending ($P_m + P_b$) Stresses (ksi) 11.2.1-7
Table 11.2.4-1 Canister P_m Stresses During a 60g Bottom Impact (15 psig Internal Pressure) 11.2.4-22
Table 11.2.4-2 Canister $P_m + P_b$ Stresses During a 60g Bottom Impact (15 psig Internal Pressure) 11.2.4-23
Table 11.2.4-3 Summary of Maximum Stresses for PWR and BWR Basket Weldments During a 60g Bottom Impact 11.2.4-24
Table 11.2.4-4 Canister P_m Stresses During a 60g Bottom Impact (No Internal Pressure) 11.2.4-24
Table 11.2.4-5 Canister Buckling Evaluation Results for 60g Bottom End Impact 11.2.4-25
Table 11.2.4-6 $P_m + P_b$ Stresses for PWR Support Disk - 60g Concrete Cask Bottom End Impact (ksi) 11.2.4-26
Table 11.2.4-7 $P_m + P_b$ Stresses for BWR Support Disk - 60g Concrete Cask Bottom End Impact (ksi) 11.2.4-27
Table 11.2.6-1 Maximum Component Temperatures (°F) During and After the Fire Accident 11.2.6-5
Table 11.2.9-1 Canister Increased External Pressure (22 psi) with No Internal Pressure (0 psi) Primary Membrane (P_m) Stresses (ksi) 11.2.9-6
Table 11.2.9-2 Canister Increased External Pressure (22 psi) with No Internal Pressure (0 psi) Primary Membrane plus Bending($P_m + P_b$) Stresses (ksi) 11.2.9-7
Table 11.2.12.4.1-1 Canister Primary Membrane (P_m) Stresses for Tip-Over Conditions – PWR - 45° Basket Drop Orientation (ksi) 11.2.12-37

List of Tables (continued)

Table 11.2.12.4.1-2 Canister Primary Membrane + Primary Bending ($P_m + P_b$) Stresses for Tip-Over Conditions – PWR - 45° Basket Drop Orientation (ksi) 11.2.12-38
Table 11.2.12.4.1-3 Support Disk Section Location for Stress Evaluation - PWR - Full Model 11.2.12-39
Table 11.2.12.4.1-4 Summary of Maximum Stresses for PWR Support Disk for Tip-Over Condition 11.2.12-40
Table 11.2.12.4.1-5 Summary of Buckling Evaluation of PWR Support Disk for Tip-Over Condition 11.2.12-40
Table 11.2.12.4.1-6 Support Disk Primary Membrane (P_m) Stresses for Tip-Over Condition - PWR Disk No. 5 - 26.28° Drop Orientation (ksi) 11.2.12-41
Table 11.2.12.4.1-7 Support Disk Primary Membrane + Primary Bending ($P_m + P_b$) Stresses for Tip-Over Condition - PWR Disk No. 5 - 26.28° Drop Orientation (ksi) 11.2.12-42
Table 11.2.12.4.1-8 Summary of Support Disk Buckling Evaluation for Tip-Over Condition - PWR Disk No. 5 - 26.28° Drop Orientation 11.2.12-43
Table 11.2.12.4.2-1 Canister Primary Membrane (P_m) Stresses for Tip-Over Conditions - BWR - 49.46° Basket Drop Orientation (ksi) 11.2.12-61
Table 11.2.12.4.2-2 Canister Primary Membrane + Primary Bending ($P_m + P_b$) Stresses for Tip-Over Conditions - BWR - 49.46° Basket Drop Orientation (ksi) 11.2.12-62
Table 11.2.12.4.2-3 Support Disk Section Locations for Stress Evaluation - BWR - Full Model 11.2.12-63
Table 11.2.12.4.2-4 Summary of Maximum Stresses for BWR Support Disk for Tip-Over Condition 11.2.12-67
Table 11.2.12.4.2-5 Summary of Buckling Evaluation of BWR Support Disk for Tip-Over Condition 11.2.12-67
Table 11.2.12.4.2-6 Support Disk Primary Membrane (P_m) Stresses for Tip-Over Condition - BWR Disk No. 5 - 77.92° Drop Orientation (ksi) 11.2.12-68
Table 11.2.12.4.2-7 Support Disk Primary Membrane + Primary Bending (P_m+P_b) Stresses for Tip-Over Condition – BWR Disk No. 5 - 77.92° Drop Orientation (ksi) 11.2.12-69

List of Tables (continued)

Table 11.2.12.4.2-8 Summary of Support Disk Buckling Evaluation for Tip-Over Condition - BWR Disk No. 5 - 77.92° Drop Orientation 11.2.12-70

Table 11.2.15.1.2-1 Normalized Stress Ratios - PWR Basket Support Disk Maximum Stresses 11.2.15-11

Table 11.2.15.1.2-2 Support Disk Primary Membrane (P_m) Stresses for Case 4, 26.28° Drop Orientation (ksi) 11.2.15-12

Table 11.2.15.1.2-3 Support Disk Primary Membrane + Primary Bending ($P_m + P_b$) Stresses for Case 4, 26.28° Drop Orientation (ksi) 11.2.15-13

Appendix 11.A ACCIDENT ANALYSIS
UNITAD Storage System

Table of Contents 11.A-i
List of Figures 11.A-ii
List of Tables 11.A-iii

Table of Contents

11.A ACCIDENT ANALYSIS FOR THE UNITAD STORAGE SYSTEM 11.A-1

11.A.1 Off-Normal Events for the UNITAD Storage System 11.A.1-1
- 11.A.1.1 Severe Ambient Temperature Conditions (106°F and -40°F) 11.A.1-1
- 11.A.1.2 Blockage of One-Half of the Air Inlets 11.A.1-3
- 11.A.1.3 Off-Normal Canister Handling Load 11.A.1-3
- 11.A.1.4 Failure of Instrumentation 11.A.1-16
- 11.A.1.5 Small Release of Radioactive Particulate from the Canister Exterior 11.A.1-16

11.A.2 Accidents and Natural Phenomena Events for the UNITAD Storage System 11.A.2-1
- 11.A.2.1 Accident Pressurization 11.A.2-1
- 11.A.2.2 Failure of All Fuel Rods with a Ground Level Breach of of the Canister 11.A.2-7
- 11.A.2.3 Fresh Fuel Loading in the Canister 11.A.2-7
- 11.A.2.4 24-Inch Drop of Vertical Concrete Cask 11.A.2-7
- 11.A.2.5 Explosion 11.A.2-21
- 11.A.2.6 Fire Accident 11.A.2-21
- 11.A.2.7 Maximum Anticipated Heat Load (133 °F Ambient Temperature) . 11.A.2-24
- 11.A.2.8 Earthquake Event 11.A.2-25
- 11.A.2.9 Flood 11.A.2-33
- 11.A.2.10 Lightning Strike 11.A.2-40
- 11.A.2.11 Tornado and Tornado-Driven Missiles 11.A.2-42
- 11.A.2.12 Tip-Over of Vertical Concrete Cask 11.A.2-57
- 11.A.2-13 Full Blockage of Vertical Concrete Cask Air Inlets and Outlets 11.A.2-70
- 11.A.2.14 Canister Closure Weld Evaluation – Accident Conditions 11.A.2-72
- 11.A.2.15 Fuel Rod Structural Evaluation 11.A.2-74

11.A.3 References 11.A.3-1

List of Figures

Figure 11.A.1.3-1 Finite Element Canister Model for Off-Normal Handling 11.A.1-6
Figure 11.A.1.3-2 Location of Sections to Evaluate Stresses for the Storage Evaluations 11.A.1-7
Figure 11.A.1.3-3 Orientation Angles of Lateral Acceleration for Off-Normal Handling 11.A.1-8
Figure 11.A.2.4-1 LS-DYNA Model for the 24-inch VCC End Drop 11.A.2-13
Figure 11.A.2.4-2 Acceleration Time History (g's) for the 24-inch VCC End Drop 11.A.2-14
Figure 11.A.2-4-3 Basket Support Disk Finite Element Model for 24-inch Drop 11.A.2-15
Figure 11.A.2-4-4 Basket Support Disk Model Section Locations 11.A.2-16
Figure 11.A.2.11-1 Tornado Missile Loading (Concrete Cask) 11.A.2-56
Figure 11.A.2.12-1 Canister Finite Element Model for the Tip-Over Condition 11.A.2-64
Figure 11.A.2.12-2 Dominant Mode Shape for the Support Disk 11.A.2-65
Figure 11.A.2.13-1 Fuel Clad Temperature (°F) History – All Vents Blocked 11.A.2-71
Figure 11.A.2.15-1 LS-DYNA Model for the Fuel Assembly 11.A.2-78
Figure 11.A.2.15-2 LS-DYNA Model for 14×14 Case 11.A.2-79
Figure 11.A.2.15-3 LS-DYNA Model for 17×17 Case 11.A.2-80
Figure 11.A.2.15-4 Linearly Varying Load on Beam Model for Tip-Over 11.A.2-81

List of Tables

Table 11.A.1.3-1 Canister Off-Normal Handling (No Internal Pressure) Primary Membrane (P_m) Stresses (ksi) 11.A.1-9
Table 11.A.1.3-2 Canister Off-Normal Handling (No Internal Pressure) Primary Membrane plus Bending ($P_m + P_b$) Stresses (ksi) 11.A.1-10
Table 11.A.1.3-3 Canister Off-Normal Handling plus Normal/Off-Normal Internal Pressure (15 psig) Primary Membrane (P_m) Stresses (ksi) 11.A.1-11
Table 11.A.1.3-4 Canister Off-Normal Handling plus Normal/Off-Normal Internal Pressure (15 psig) Primary Membrane plus Bending ($P_m + P_b$) Stresses (ksi) 11.A.1-12
Table 11.A.1.3-5 Canister Off-Normal Handling plus Normal/Off-Normal Internal Pressure (15 psig) Primary plus Secondary (P + Q) Stresses (ksi) 11.A.1-13
Table 11.A.1.3-6 P_m Stresses for Support Disk Off-Normal Conditions (ksi), 30.8°... 11.A.1-14
Table 11.A.1.3-7 P_m+P_b Stresses for Support Disk Off-Normal Conditions (ksi), 30.8° 11.A.1-14
Table 11.A.1.3-8 P_m+P_b + Q Stresses for Support Disk Off-Normal Conditions (ksi), 30.8 ° 11.A.1-15
Table 11.A.2.1-1 Canister Accident Internal Pressure (100 psig) – Primary Membrane (P_m) Stresses (ksi) 11.A.2-3
Table 11.A.2.1-2 Canister Accident Internal Pressure (100 psig) – Primary Membrane plus Bending ($P_m + P_b$) Stresses (ksi) 11.A.2-4
Table 11.A.2.1-3 Canister Normal Handling plus Accident Internal Pressure (100 psig) Primary Membrane (P_m) Stresses (ksi) 11.A.2-5
Table 11.A.2-1-4 Canister Normal Handling plus Accident Internal Pressure (100 psig) Primary Membrane plus Bending ($P_m + P_b$) Stresses (ksi) 11.A.2-6
Table 11.A.2.4-1 Canister P_m Stresses During a 60g Bottom Impact (15 psig Internal Pressure) 11.A.2-17
Table 11.A.2.4-2 Canister $P_m + P_b$ Stresses During a 60g Bottom Impact (15 psig Internal Pressure) 11.A.2-18
Table 11.A.2.4-3 Canister P_m Stresses During a 60g Bottom Impact (0 psig Internal Pressure) 11.A.2-19
Table 11.A.2.4-4 Canister $P_m + P_b$ Stresses During a 60g Bottom Impact (0 psig Internal Pressure) 11.A.2-20

List of Tables (continued)

Table 11.A.2.6-1 Maximum Component Temperatures (°F) During and After the Fire Accident 11.A.2-23
Table 11.A.2.9-1 Canister Increased External Pessure (22 psi) with No Internal Pressure (0 psi) Primary Membrane (P_m) Stresses (ksi) 11.A.2-38
Table 11.A.2.9-2 Canister Increased External Pessure (22 psi) with No Internal Pressure (0 psi) Primary Membrane plus Bending ($P_m + P_b$) Stresses (ksi) 11.A.2-39
Table 11.A.2.12-1 Canister Primary Membrane (P_m) Stresses for Tip-Over Conditions (ksi) 11.A.2-66
Table 11.A.2.12-2 Canister Primary Membrane + Primary Bending ($P_m + P_b$) Stresses for Tip-Over Conditions (ksi) 11.A.2-67
Table 11.A.2.12-3 Summary of Maximum Stresses for Support Disk for Tip-Over Conditions, (ksi) 11.A.2-68
Table 11.A.2-12-4 Support Disk Primary Membrane (P_m) Stresses for the Tip-Over Condition, (ksi), 0° Drop Orientation 11.A.2-69

11.A ACCIDENT ANALYSES FOR THE UNITAD STORAGE SYSTEM

The analyses of the off-normal and accident design events, including those identified by ANSI/ANS 57.9-1992, are presented in this appendix for the UNITAD Storage System. Section 11.A.1 describes the off-normal events that could occur during the use of the UNITAD Storage System, possibly as often as once per calendar year. Section 11.A.2 addresses very low probability events that might occur once during the lifetime of the ISFSI, or hypothetical events that are postulated because their consequences may result in the maximum potential impact on the surrounding environment.

The UNITAD Storage System includes Canisters and Vertical Concrete Casks (VCC), also referred to as the Concrete Cask, of two different lengths to accommodate two length classes of PWR fuel. In the analyses of this appendix, the bounding VCC parameters (such as weight and center of gravity) are conservatively used, as appropriate, to determine the VCC's capability to withstand the effects of the analyzed events.

The load conditions imposed on the Canisters and the baskets by the design basis normal, off-normal, and accident conditions of storage are less rigorous than those imposed by the transport conditions, including the 30-foot drop impacts and the fire accident (10 CFR 71). Consequently, the evaluation of the Canisters and the baskets for transport conditions bounds those for storage conditions evaluated in this appendix. A complete evaluation of the normal and accident transport condition loading on the PWR canisters and the baskets is presented in the Safety Analysis Report for the UNITAD Transport Cask.

This appendix demonstrates that the UNITAD Storage System satisfies the requirements of 10 CFR 72.24 and 10 CFR 72.122 for off-normal and accident conditions. These analyses are based on conservative assumptions to ensure that the consequences of off-normal conditions and accident events are bounded by the reported results. If required for a site-specific application, a more detailed evaluation could be used to extend the limits defined by the events evaluated in this appendix.

THIS PAGE INTENTIONALLY LEFT BLANK

11.A.1 Off-Normal Events for the UNITAD Storage System

This section evaluates postulated events that might occur once during any calendar year of operations. The actual occurrence of any of these events is, therefore, infrequent.

11.A.1.1 Severe Ambient Temperature Conditions (106°F and -40°F)

This section evaluates the UNITAD Storage System for the steady-state effects of severe ambient temperature conditions (106°F and -40°F).

The cause, detection, corrective action and radiological impact of this event for the UNITAD Storage System are essentially the same as those discussions provided for the NAC-UMS® Storage System in FSAR Sections 11.1.1.1, 11.1.1.2, 11.1.1.4 and 11.1.1.5.

Section 11.A.1.1.1, presented here, provides the "Analysis of the Severe Ambient Temperature Event for the UNITAD Storage System."

11.A.1.1.1 Analysis of the Severe Ambient Temperature Event for the UNITAD Storage System

Off-normal temperature conditions are evaluated by using the thermal models described in Section 4.A.4.1. The design basis heat load of 22 kW is used in the evaluation of PWR fuel. The temperatures of concrete, the Canister, basket and fuel cladding are determined using the two-dimensional axisymmetric Concrete Cask and Canister models (Section 4.A.4.1.1). A steady-state condition is considered in all analyses.

The principal component temperatures for each of the ambient temperature conditions discussed previously are summarized in the following table along with the allowable temperatures. As the table shows, the component temperatures are within the allowable values for the off-normal ambient conditions.

Component	106°F Ambient Max Temp. (°F) PWR	-40°F Ambient Max Temp. (°F) PWR	Allowable Temp. (°F) PWR
Fuel Cladding	713	604	1058
Support Disks	671	562	800
Heat Transfer Disks	666	557	750
Canister Shell	407	271	800
Concrete	235	32	350

The thermal stress evaluations for the concrete cask for these off-normal conditions are bounded by those for the accident condition of "Maximum Anticipated Heat Load (133°F ambient temperature)" as presented in Section 11.A.2.7. Thermal stress analyses for the Canister and basket components are performed using the ANSYS finite element models as described in Section 3.A.4.4. Evaluations of the thermal stresses combined with the stresses due to other off-normal loads (e.g., Canister internal pressure and handling) are shown in Section 11.A.1.3.

There are no adverse consequences for these off-normal conditions. The maximum component temperatures are within the allowable temperature values.

11.A.1.2 Blockage of One-Half of the Air Inlets

This section evaluates the UNITAD Storage System for the steady-state effects of a blockage of one-half of the air inlets at the normal ambient temperature (76°F).

The cause, detection and corrective action of this event for the UNITAD Storage System are essentially the same as those discussions provided for the NAC-UMS® Storage System in FSAR Sections 11.1.2.1, 11.1.2.2 and 11.1.2.4. The radiological impact of this event differs between the UMS and UNITAD system as the expected maximum contact dose rates are 389 mrem/hr, which is higher for the UNITAD system. The extremity exposure for clearing the air inlets of the UNITAD Storage System is estimated at 97 mrem.

11.A.1.2.1 Analysis of the Blockage Event for the UNITAD Storage System

Using the same methods and the same thermal models described in Section 11.A.1.1 for the off-normal conditions of severe ambient temperatures, thermal evaluations are performed for the concrete cask and the Canister and its contents for this off-normal condition. The boundary condition is modified to allow only half of the air flow into the air inlet to simulate the half inlets blocked condition. The calculated maximum component temperatures due to this off-normal condition are compared to the allowable component temperatures. As shown in Table 4.A.1-1, the component temperatures for the half blocked condition are bounded by the component temperatures of the off-normal severe heat condition.

The thermal stress evaluations for the concrete cask for this off-normal condition are bounded by those for the accident condition of "Maximum Anticipated Heat Load (133°F ambient temperature)" as presented in Section 11.A.2.7. Thermal stress analyses for the Canister and basket components are performed using the ANSYS finite element models described in Section 3.A.4.4. Evaluations of the thermal stresses combined with stresses due to other off-normal loads (e.g., Canister internal pressure and handling) are shown in Section 11.A.1.3.

11.A.1.3 Off-Normal Canister Handling Load

This section evaluates the consequence of loads on the Canister during the installation of the Canister in the Vertical Concrete Cask, or removal of the Canister from the Concrete Cask or from the Transfer Cask. The Canister may be handled vertically in the Transfer Cask.

The cause, detection, corrective action and radiological impact of this event for the UNITAD Storage System are essentially the same as those discussions provided for the NAC-UMS® Storage System in FSAR Sections 11.1.3.1, 11.1.3.2, 11.1.3.4 and 11.1.3.5.

11.A.1.3.1 Analysis of the Off-Normal Canister Handling Load Event for the UNITAD Storage System

The Canister off-normal handling analysis is performed using an ANSYS finite element model as shown in Figure 11.A.1.3-1. The model is based on the Canister model presented in Section 3.A.4.1. The Canister contents weight (including appropriate g loading) is represented by uniform pressure loads applied to the inner surfaces of the Canister. A uniform pressure is applied to the top surface of the Canister bottom plate to represent axial loads and a uniform pressure is applied to a 5° section of the inner surface of the Canister shell to represent lateral loads.

The off-normal Canister handling loads are defined as 0.5g applied in all directions (i.e., in the global x, y, and z directions) in addition to a 1g lifting load applied in the finite element model. The resulting off-normal handling accelerations are 0.7071g in the lateral direction and 1.5g (0.5g + 1g) in the vertical direction.

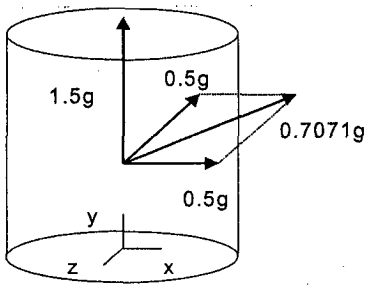

The boundary conditions (restraints) for the Canister model are the same as those described in Section 3.4.4.1.4 for the normal handling condition. In addition, for the lateral loading, the Canister is assumed to be handled inside the Vertical Concrete Cask. The interface between the canister shell and the concrete cask inner surface is represented using x-direction displacement constraints applied to a 5° section of the outer surface of the canister shell.

The resulting maximum Canister stresses for off-normal handling loads are summarized in Tables 11.A.1.3-1 and 11.A.1.3-2 for primary membrane and primary membrane plus bending stresses, respectively.

The resulting maximum Canister stresses for combined off-normal handling, maximum off-normal internal pressure (15 psig), and thermal stress loads are summarized in Tables 11.A.1.3-3, 11.A.1.3-4, and 11.A.1.3-5 for primary membrane, primary membrane plus bending, and primary plus secondary stresses, respectively.

The sectional stresses shown in Tables 11.A.1.3-1 through 11.A.1.3-5 at 15 axial locations are obtained for each angular division of the model (a total of 35 angular locations for each axial location). The locations of the stress sections are shown in Figure 11.A.1.3-2.

To determine the structural adequacy of the PWR fuel basket support disks and weldments for off-normal conditions, a structural analysis is performed by using ANSYS to evaluate off-normal handling loads. To simulate off-normal loading conditions, an inertial load of 1.5g is applied to the support disk and the weldments in the axial (canister axial) direction and 0.5g in two orthogonal disk in-plane directions (0.707g resultant), for the governing case (canister handled in the vertical orientation).

Stresses in the support disks and weldments are calculated by applying the off-normal loads to the ANSYS model described in Section 3.A.5.1.8 and shown in Figure 3.A.5-3. The model is comprised of SHELL63 elements, which may be subjected to in-plane and out-of-plane loadings. CONTAC52 elements are added to the model in Figure 3.A.5-3 at the circumference of the basket disk to represent the combined gap between the support disk and the inner surface of the transfer cask, which is 0.75 inch plus 0.125 inch or 0.875 inch. A single disk is modeled and the loading applied to the edge of the slot is a pressure load. This pressure load represents the fuel, heat transfer disk and the borated stainless steel tube. The shortest Canister is used since the load per disk is maximum for the shorter Canister configuration.. The out-of-plane loading is reacted out by the eight tie rods. Each tie rod is represented by a displacement constraint in the axial direction (Z). Weak tangential springs at the disk outer radius are modeled to prevent rotational rigid body motion. Two solutions are generated using this model. The first solution is the stresses resulting from the mechanical loading (P), and the second solution incorporates the loading due to thermal expansion (P+Q). The evaluation of the support disk provides stresses that would bound stresses being developed in either end weldment. In the lateral loading, the end weldments do not provide support to the fuel. Five orientations of the lateral acceleration with respect to the disk geometry are considered and are shown in Figure 11.A.1.3-3.

The stress evaluation for the support disk is performed according to ASME Code, Section III, Subsection NG. For off-normal conditions, Level C allowable stresses are used: the allowable stress is 1.2 S_m or S_y, 1.8 S_m or 1.5S_y, and 3.0 S_m for the P_m, P_m+P_b, and P_m+P_b+Q stress categories, respectively. The highest stresses are calculated for an orientation angle of 30.8° and stress evaluation results for this case are presented in Tables 11.A.1.3-6 through 11.A.1.3-8. The tables list the 15 sections with the highest P_m, $P_m + P_b$, and $P_m + P_b + Q$ stress intensities. The margin of safety at each disk section is based on the allowable stress intensity using the highest temperature at each section computed from the thermal conduction analysis of the disk. The minimum stress margins are 8.55 and 4.17 for P_m and $P_m + P_b$, respectively. For the combined mechanical and thermal stress, P + Q, the minimum stress margin is +0.02.

The Canister and fuel basket maintain positive margins of safety for the off-normal handling condition. The UNITAD Storage System is in compliance with all applicable regulatory criteria.

Figure 11.A.1.3-1 Finite Element Canister Model for Off-Normal Handling

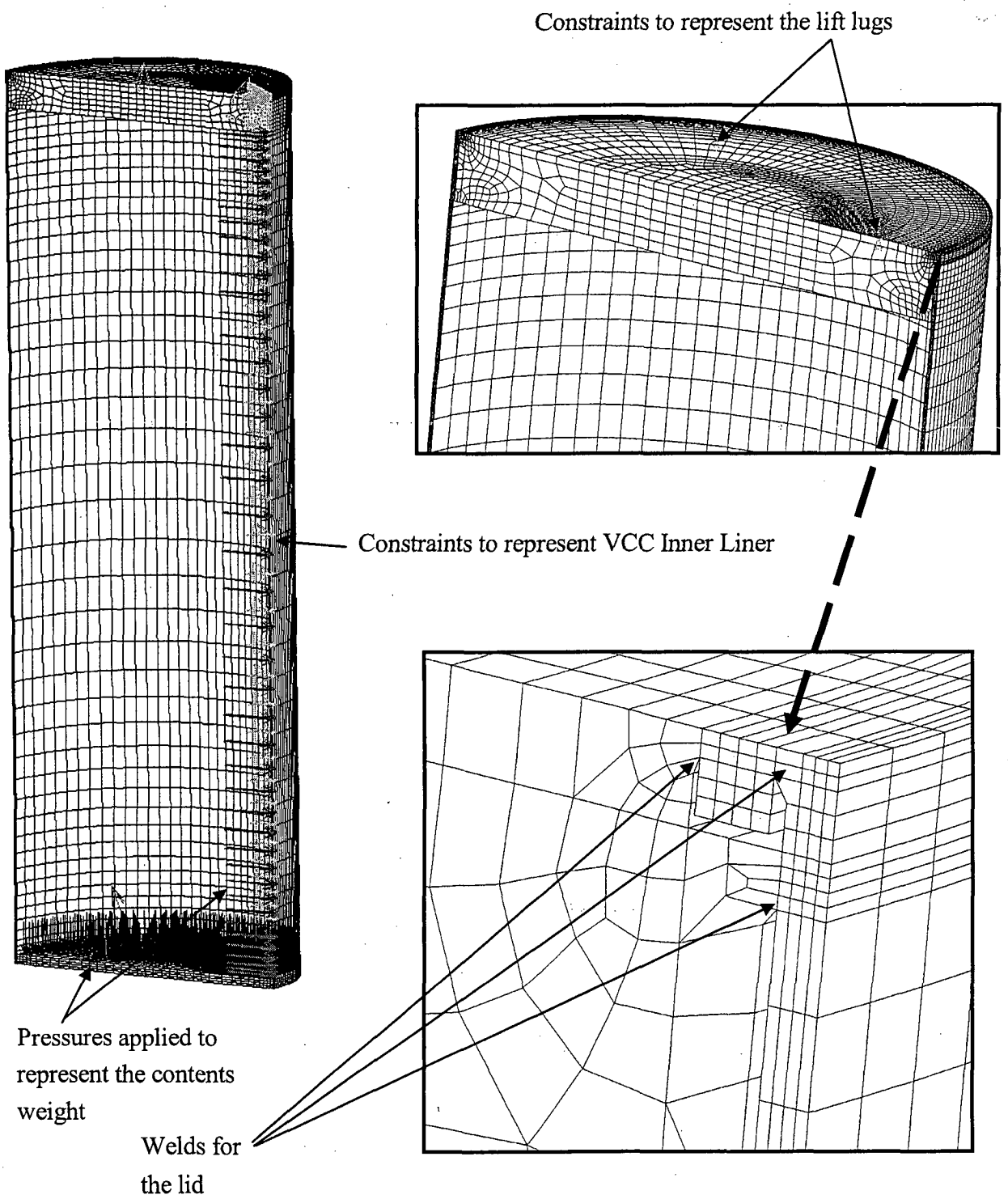

Figure 11.A.1.3-2 Location of Sections to Evaluation Stresses for the Storage Evaluation

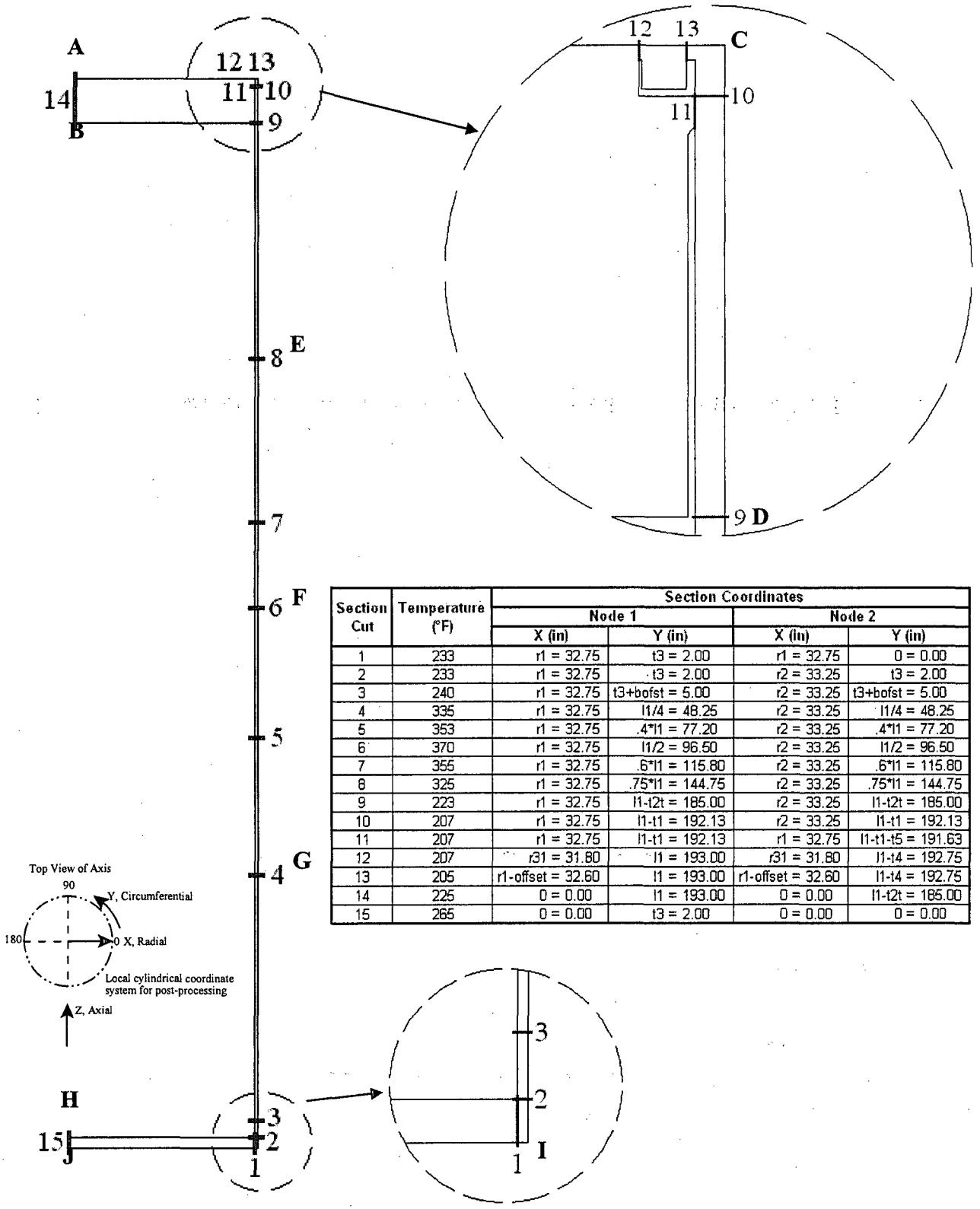

Section Cut	Temperature (°F)	Section Coordinates			
		Node 1		Node 2	
		X (in)	Y (in)	X (in)	Y (in)
1	233	r1 = 32.75	t3 = 2.00	r1 = 32.75	0 = 0.00
2	233	r1 = 32.75	t3 = 2.00	r2 = 33.25	t3 = 2.00
3	240	r1 = 32.75	t3+bofst = 5.00	r2 = 33.25	t3+bofst = 5.00
4	335	r1 = 32.75	l1/4 = 48.25	r2 = 33.25	l1/4 = 48.25
5	353	r1 = 32.75	.4*l1 = 77.20	r2 = 33.25	.4*l1 = 77.20
6	370	r1 = 32.75	l1/2 = 96.50	r2 = 33.25	l1/2 = 96.50
7	355	r1 = 32.75	.6*l1 = 115.80	r2 = 33.25	.6*l1 = 115.80
8	325	r1 = 32.75	.75*l1 = 144.75	r2 = 33.25	.75*l1 = 144.75
9	223	r1 = 32.75	l1-t2t = 185.00	r2 = 33.25	l1-t2t = 185.00
10	207	r1 = 32.75	l1-t1 = 192.13	r2 = 33.25	l1-t1 = 192.13
11	207	r1 = 32.75	l1-t1 = 192.13	r1 = 32.75	l1-t1-t5 = 191.63
12	207	r31 = 31.80	l1 = 193.00	r31 = 31.80	l1-t4 = 192.75
13	205	r1-offset = 32.60	l1 = 193.00	r1-offset = 32.60	l1-t4 = 192.75
14	225	0 = 0.00	l1 = 193.00	0 = 0.00	l1-t2t = 185.00
15	265	0 = 0.00	t3 = 2.00	0 = 0.00	0 = 0.00

Figure 11.A.1.3-3 Orientation Angles of Lateral Acceleration for Off-Normal Handling

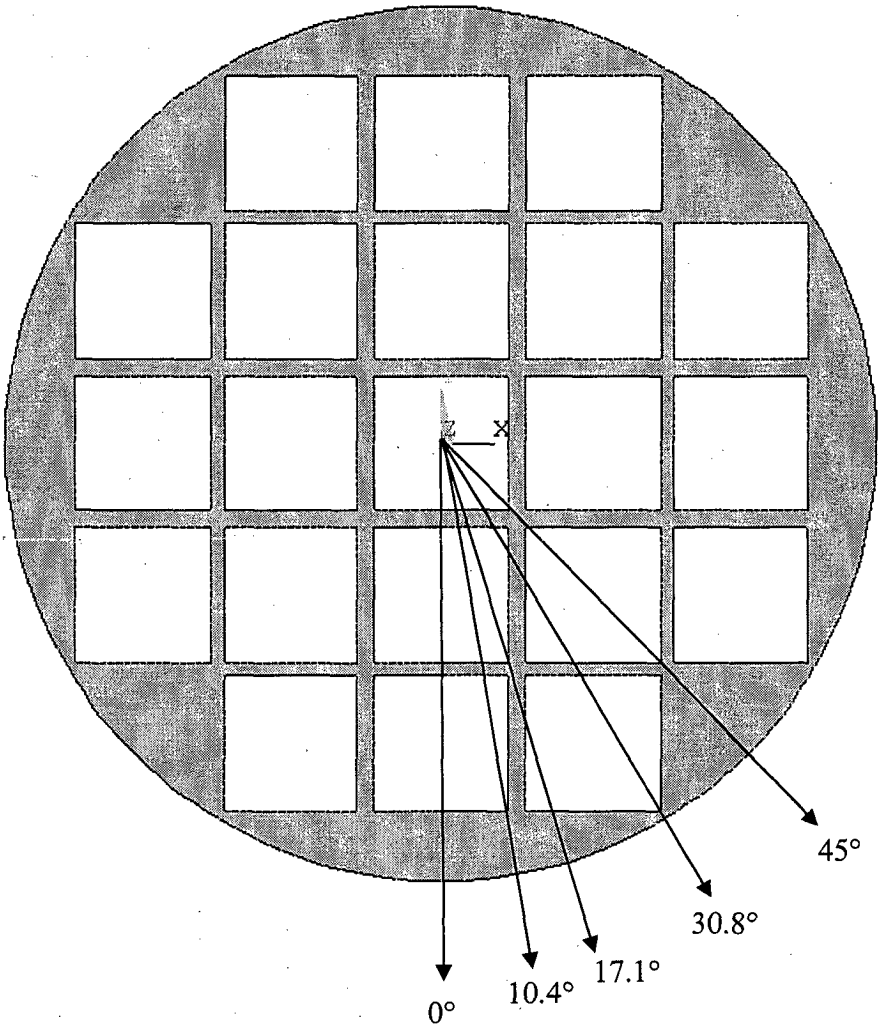

Table 11.A.1.3-1 Canister Off-Normal Handling (No Internal Pressure) Primary Membrane (P_m) Stresses (ksi)

Section[1]	Component Stresses (ksi)						S_{int}
	S_x	S_y	S_z	S_{xy}	S_{yz}	S_{xz}	
1	-0.04	0.73	2.01	0.04	0.05	-0.12	2.07
2	1.74	-2.77	-0.60	0.05	0.15	-0.49	4.61
3	0.03	-4.30	1.10	0.00	0.20	0.29	5.48
4	0.00	0.01	1.16	0.00	0.05	0.00	1.16
5	0.00	0.01	1.15	0.00	0.06	0.00	1.15
6	0.00	0.00	1.18	0.00	0.06	0.00	1.19
7	0.00	-0.01	1.23	0.00	0.06	0.00	1.24
8	0.00	-0.01	1.37	0.00	0.05	0.00	1.38
9	0.00	-0.09	1.72	0.00	0.06	-0.01	1.81
10	-2.84	-0.41	-0.07	0.22	-0.16	-0.70	3.19
11	-2.27	-0.34	-0.66	0.27	0.03	-0.96	2.59
12	-1.55	0.22	-0.36	0.19	0.00	-0.13	1.83
13	-2.48	0.12	-0.23	0.55	-0.04	-0.04	2.82
14	-0.02	0.00	0.00	0.00	0.00	-0.01	0.03
15	0.17	0.16	-0.02	0.00	0.00	0.00	0.18

[1] See Figure 11.A.1.3-2 for definition of locations of stress sections and the components shown are in the cylindrical coordinate system.

Table 11.A.1.3-2 Canister Off-Normal Handling (No Internal Pressure) Primary Membrane plus Bending ($P_m + P_b$) Stresses (ksi)

Section[1]	Component Stresses (ksi)						S_{int}
	S_x	S_y	S_z	S_{xy}	S_{yz}	S_{xz}	
1	0.72	-1.05	6.19	0.08	0.11	0.25	7.26
2	0.75	-6.84	-12.97	0.00	0.17	-1.20	13.93
3	0.26	-3.40	4.31	0.00	0.44	0.33	7.78
4	0.08	-0.59	0.69	0.03	0.00	0.00	1.28
5	0.00	-0.08	1.13	0.00	0.05	0.00	1.21
6	0.00	-0.14	1.13	0.00	0.03	0.00	1.27
7	0.00	-0.16	1.18	0.00	0.04	0.00	1.34
8	0.00	-0.19	1.30	0.00	0.05	0.00	1.49
9	0.00	-0.09	1.83	0.00	0.07	-0.01	1.92
10	-3.00	-0.28	-0.51	0.31	0.04	-1.17	3.46
11	-2.63	-0.35	-0.92	0.33	0.09	-0.84	2.72
12	-2.26	-0.10	-0.47	0.18	0.00	-0.22	2.22
13	-2.53	0.24	-0.17	0.51	-0.03	0.00	2.95
14	-0.48	-0.31	0.00	-0.01	0.00	-0.01	0.49
15	8.95	8.94	-0.01	0.00	0.00	0.00	8.96

[1] See Figure 11.A.1.3-2 for definition of locations of stress sections and the components shown are in the cylindrical coordinate system.

Table 11.A.1.3-3 Canister Off-Normal Handling plus Normal/Off-Normal Internal Pressure (15 psig) Primary Membrane (P_m) Stresses (ksi)

Section[1]	Component Stresses (ksi)						S_{int}	S_{allow}	MS
	S_x	S_y	S_z	S_{xy}	S_{yz}	S_{xz}			
1	0.00	1.38	3.30	-0.01	-0.01	-0.17	3.31	24.67	6.44
2	2.65	-3.96	-0.96	0.07	0.21	-0.72	6.77	24.67	2.64
3	0.03	-5.72	1.61	0.00	0.28	0.43	7.46	24.60	2.30
4	-0.01	0.99	1.69	0.00	0.07	0.00	1.70	23.48	12.80
5	-0.01	0.99	1.67	0.00	0.07	0.00	1.68	23.20	12.79
6	-0.01	0.98	1.68	0.00	0.07	0.00	1.70	22.95	12.51
7	-0.01	0.98	1.73	0.00	0.06	0.00	1.74	23.30	12.35
8	-0.01	0.97	1.88	0.00	0.06	0.00	1.89	23.62	11.51
9	-0.01	0.85	2.24	0.00	0.06	0.00	2.25	24.81	10.01
10	-3.20	-0.37	0.03	0.24	-0.17	-0.85	3.75	24.94	5.66
11	-2.02	-0.17	-0.65	0.25	0.06	-1.27	2.92	19.94[2]	5.83
12	-1.79	0.26	-0.51	0.22	0.00	-0.18	2.12	24.94	10.76
13	-2.97	0.19	-0.14	0.64	-0.02	-0.10	3.41	24.95	6.32
14	-0.03	-0.01	-0.01	0.00	0.00	-0.01	0.03	24.75	948.95
15	0.27	0.26	-0.02	0.00	0.00	0.00	0.29	24.35	82.43

1 See Figure 11.A.1.3-2 for definition of locations of stress sections and the components shown are in the cylindrical coordinate system.

2 Allowable stress includes reduction factor for closure lid weld, 0.8 × allowable stress.

Table 11.A.1.3-4 Canister Off-Normal Handling plus Normal/Off-Normal Internal Pressure (15 psig) Primary Membrane plus Bending ($P_m + P_b$) Stresses (ksi)

Section[1]	Component Stresses (ksi)						S_{int}	S_{allow}	MS
	S_x	S_y	S_z	S_{xy}	S_{yz}	S_{xz}			
1	1.12	-1.36	9.36	0.10	0.15	0.38	10.74	35.21	2.28
2	1.31	-9.71	-20.71	0.18	0.06	-1.74	22.30	35.21	0.58
3	0.39	-4.38	6.19	0.00	0.40	0.50	10.64	35.04	2.29
4	-0.13	1.75	1.46	-0.05	-0.01	0.00	1.88	32.73	16.40
5	-0.01	1.08	1.69	0.00	0.08	0.00	1.71	32.27	17.85
6	-0.01	1.05	1.70	0.00	0.09	0.00	1.72	31.85	17.51
7	0.00	1.08	1.77	0.00	0.06	0.00	1.78	32.43	17.25
8	0.00	1.14	1.94	0.00	0.06	0.00	1.95	32.98	15.94
9	0.00	0.92	2.37	0.00	0.05	-0.01	2.38	35.54	13.95
10	-3.58	-0.37	-0.62	0.33	0.11	-1.42	4.13	35.86	7.67
11	-2.99	-0.45	-1.26	0.35	0.14	-1.07	3.14	28.66[2]	8.13
12	-2.85	-0.19	-0.67	0.22	0.00	-0.31	2.74	35.86	12.10
13	-3.43	0.17	-0.13	0.61	-0.03	-0.02	3.81	35.88	8.43
14	-0.83	-0.63	-0.02	-0.01	0.00	-0.01	0.82	35.40	42.34
15	13.11	13.10	-0.01	-0.01	0.00	0.00	13.13	34.44	1.62

1 See Figure 11.A.1.3-2 for definition of locations of stress sections and the components shown are in the cylindrical coordinate system.

2 Allowable stress includes reduction factor for closure lid weld, 0.8 × allowable stress.

Table 11.A.1.3-5 Canister Off-Normal Handling plus Normal/Off-Normal Internal Pressure (15 psig) Primary plus Secondary (P + Q) Stresses (ksi)

Section[1]	Component Stresses (ksi)						S_{int}	S_{allow}	MS
	S_x	S_y	S_z	S_{xy}	S_{yz}	S_{xz}			
1	1.85	1.50	12.47	0.00	-0.07	0.69	11.01	60.00	4.45
2	1.68	-9.92	-25.68	0.24	0.10	-2.09	27.68	60.00	1.17
3	0.40	-4.05	7.07	0.00	0.32	0.53	11.18	60.00	4.37
4	-0.15	5.44	1.65	0.10	0.07	-0.01	5.59	58.63	9.50
5	-0.13	5.73	1.60	0.06	0.06	0.00	5.87	57.93	8.87
6	0.61	-7.32	-2.32	0.10	0.00	0.00	7.94	57.27	6.21
7	-0.16	6.16	1.59	0.08	-0.17	0.02	6.33	58.17	8.20
8	0.52	-5.62	-1.59	0.12	-0.02	0.00	6.15	59.02	8.61
9	-0.06	1.19	2.92	0.01	-0.28	0.03	3.02	60.00	18.85
10	-4.03	-0.09	-0.64	0.00	-0.04	-1.58	4.65	60.00	11.90
11	2.36	1.71	1.06	-0.05	0.08	-2.32	4.82	48.00[2]	8.96
12	-3.07	0.34	-1.00	0.08	-0.01	-0.42	3.50	60.00	16.16
13	-4.14	0.71	0.19	0.22	0.00	-0.11	4.87	60.00	11.31
14	-2.39	-2.11	0.06	0.00	0.02	0.00	2.46	60.00	23.40
15	-15.86	-15.76	-0.06	0.04	0.03	0.00	15.81	60.00	2.79

1 See Figure 11.A.1.3-2 for definition of locations of stress sections and the components shown are in the cylindrical coordinate system.

2 Allowable stress includes reduction factor for closure lid weld, 0.8 × allowable stress.

Table 11.A.1.3-6 P_m Stresses for Support Disk Off-Normal Conditions (ksi), 30.8°

Number	Section Location	Sx	Sy	Sxy	Sint	Allowable Stress	Margin of Safety
1	82	1.23	-0.88	-0.15	2.13	20.39	8.55
2	85	1.04	-0.65	-0.13	1.71	19.51	10.40
3	88	1.00	-0.43	-0.13	1.45	19.54	12.46
4	101	-0.02	-0.46	-0.63	1.33	20.70	14.51
5	84	-1.26	-0.73	-0.17	1.31	19.54	13.94
6	87	-1.15	-0.50	-0.15	1.18	19.51	15.55
7	90	-1.02	-0.28	-0.13	1.04	20.39	18.53
8	83	0.05	-0.93	0.07	1.00	20.02	19.09
9	7	0.26	-0.28	-0.10	0.88	20.39	22.12
10	104	0.03	-0.38	-0.33	0.77	20.70	25.81
11	10	0.20	-0.38	-0.12	0.76	19.51	24.73
12	13	-0.55	0.16	-0.11	0.74	19.54	25.32
13	86	0.05	-0.67	0.08	0.73	19.55	25.83
14	9	0.19	-0.28	-0.14	0.72	19.54	26.12
15	15	0.08	0.08	-0.10	0.69	20.39	28.42

1. Section cut locations shown in Figure 3.A.5-4.
2. Allowable stress based on highest computed temperature at section.

Table 11.A.1.3-7 $P_m + P_b$ Stresses for Support Disk Off-Normal Conditions (ksi), 30.8°

Number	Section Location	Sx	Sy	Sxy	Sint	Allowable Stress	Margin of Safety
1	101	-3.94	-2.4	-2.73	6.01	31.05	4.17
2	104	2.50	0.96	-1.67	3.68	31.05	7.43
3	97	-2.87	-1.20	0.98	3.32	31.05	8.36
4	78	3.16	0.72	-0.11	3.16	30.59	8.67
5	70	2.90	1.53	0.02	2.90	29.30	9.12
6	51	2.85	1.78	-0.02	2.85	29.27	9.27
7	100	-1.90	-0.74	-1.29	2.84	31.05	9.95
8	79	2.75	1.29	-0.01	2.75	29.25	9.64
9	55	-1.35	-2.66	0.08	2.66	30.87	10.60
10	80	-2.59	-2.01	0.16	2.63	29.25	10.11
11	61	-2.25	-2.59	-0.03	2.59	27.34	9.55
12	81	2.58	0.65	-0.10	2.58	30.59	10.85
13	63	-2.14	-2.53	0.01	2.53	27.34	9.79
14	82	0.25	-2.20	-0.14	2.46	30.59	11.42
15	71	2.44	1.98	-0.05	2.45	27.45	10.21

1. Section cut locations shown in Figure 3.A.5-4
2. Allowable stress based on highest computed temperature at section

Table 11.A.1.3-8 $P_m + P_b + Q$ Stresses for Support Disk Off-Normal Conditions (ksi), 30.8°

Number	Section Location	Sx	Sy	Sxy	Sint	Allowable Stress	Margin of Safety
1	101	46.88	22.96	16.43	55.24	56.1	0.02
2	100	46.34	22.67	16.34	54.68	56.10	0.03
3	97	43.16	21.01	-15.47	51.11	56.10	0.10
4	104	43.35	20.48	-15.35	51.05	56.10	0.10
5	102	19.08	39.33	15.53	47.75	56.10	0.17
6	99	18.75	38.99	15.35	47.26	56.10	0.19
7	103	18.37	38.53	-15.27	46.75	56.10	0.20
8	98	17.93	37.83	-14.98	45.86	56.10	0.22
9	78	-19.78	-8.60	1.01	19.87	55.25	1.78
10	70	-19.70	-11.55	0.99	19.82	52.88	1.67
11	84	-11.79	-19.43	1.24	19.62	52.88	1.69
12	27	-19.23	-11.00	1.02	19.35	52.88	1.73
13	82	-7.22	-19.15	0.81	19.21	55.25	1.88
14	19	-18.62	-7.62	0.88	18.69	55.25	1.96
15	13	-11.08	-18.51	1.12	18.68	52.88	1.83

1. Section cut locations shown in Figure 3.A.5-4
2. Allowable stress based on highest computed temperature at section

11.A.1.4 Failure of Instrumentation

The UNITAD Storage System may use a temperature-sensing system to measure the outlet air temperature at each of the four air outlets on each concrete cask. The air temperatures at the outlets may be measured and reviewed daily.

The cause, detection, corrective action and radiological impact of this event for the UNITAD Storage System are essentially the same as those discussions provided for the NAC-UMS® Storage System in FSAR Sections 11.1.4.1, 11.1.4.2, 11.1.4.4 and 11.1.4.5.

11.A.1.4.1 Analysis of the Instrumentation Failure Event for the UNITAD Storage System

This evaluation requires a transient analysis of the loaded Canister in the concrete cask to be performed. The bounding condition is for the vents to be completely blocked. This condition effectively removes the convection flow-up through the annulus, which reduces the analysis to only requiring conduction and radiation to be modeled. The finite element model in Section 4.A.4.1.1 is used to perform the transient thermal analysis with all vents blocked. See Section 11.A.2.13.1 for analysis details and results. As shown in Section 11.A.2.13.1, all component temperatures are below the allowable for a 24-hour surveillance period.

11.A.1.5 Small Release of Radioactive Particulate From the Canister Exterior

The procedures for loading the Canister provide for steps to minimize exterior surface contact with contaminated spent fuel pool water, and the exterior surface of the Canister is surveyed by smear at the top end to verify Canister surface conditions. Design features are also employed to ensure that the Canister surface is generally free of surface contamination prior to its installation in the Concrete Cask. The surface of the Canister is free of traps that could hold contamination. The presence of contamination on the external surface of the Canister is unlikely and, therefore, no particulate release from the Canister exterior surface is expected to occur in normal use.

The cause, detection, corrective action and radiological impact of this event for the UNITAD Storage System are essentially the same as those discussions provided for the NAC-UMS® Storage System in FSAR Sections 11.1.5.1, 11.1.5.2, 11.1.5.4 and 11.1.5.5.

11.A.1.5.1 Analysis of the Radioactive Particulate Event for the UNITAD Storage System

The analysis method used in the calculation of radioactive particulate release is outlined in Section 5.A.5.4. Results of the analysis are discussed in Section 5.A.6.5 for a residual contamination limit of 1,000 dpm/100 cm^2 β-γ and 20 dpm/100 cm^2 α. Resulting organ and whole body exposures at 100 meters (i.e, minimum distance to a 10 CFR 72 ISFSI) are less than 0.01 mrem.

This analysis demonstrates that the off-site radiological consequences of the release of Canister surface contamination are negligible, and all applicable regulatory criteria can be met for a storage array.

THIS PAGE INTENTIONALLY LEFT BLANK

11.A.2 Accidents and Natural Phenomena Events for the UNITAD Storage System

This section presents the results of analyses of the design basis and hypothetical accident conditions evaluated for the UNITAD Storage System. In addition to design basis accidents, this section addresses very low probability events, including natural phenomena that might occur over the lifetime of the Independent Spent Fuel Storage Installation (ISFSI), or hypothetical events that are postulated to occur because their consequences may result in the maximum potential impact on the immediate environment.

The UNITAD Storage System includes Canisters and Vertical Concrete Casks of two different lengths to accommodate two types of PWR fuel. In the accident analyses of this section, the bounding cask parameters (such as weight and center of gravity) are conservatively used, as appropriate, to determine the cask's capability to withstand the effects of the accidents.

The results of these analyses show that no credible accident exists that will result in a dose of ≥ 5 rem beyond the postulated controlled area. The UNITAD Storage System is demonstrated to have a substantial design margin of safety and to provide protection to the public and to occupational personnel during storage of spent nuclear fuel.

11.A.2.1 Accident Pressurization

Accident pressurization is a hypothetical event that assumes the failure of all of the fuel rods contained within the Canister. No storage conditions are expected to lead to the rupture of all of the fuel rods.

Results of analysis of this event demonstrate that the Canister is not significantly affected by the increase in internal pressure that results from the hypothetical rupture of all PWR fuel rods contained within the Canister. Positive margins of safety exist throughout the Canister.

The cause, detection, corrective action and radiological impact of this event for the UNITAD Storage System are essentially the same as those discussions provided for the NAC-UMS® Storage System in FSAR Sections 11.2.1.1, 11.2.1.2, 11.2.1.4 and 11.2.1.5.

11.A.2.1.1 Analysis of the Accident Pressurization Event for the UNITAD Storage System

Maximum Canister Stress Due to Internal Pressure

The analysis requires the calculation of the free volume of the Canister, calculation of the releasable quantity of fill and fission gas in the fuel assemblies, BPRA gases, and the subsequent calculation of the pressure in the Canister, if these gases are added to the backfill helium pressure (initially at 1 atm). Canister pressures are determined for two accident scenarios, 100% fuel failure and a maximum temperature accident. The maximum temperature accident includes full vent blockage. While no design basis event results in a 100% fuel failure condition, the pressures from this condition are presented to form a complete licensing basis. The method employed in either of the accident analyses is identical to that employed in the normal condition evaluation of Sections 3.A.5.1.3 and 4.A.4.5.

Under 100% fuel/BPRA rod failure conditions and a conservative normal condition average gas temperature of 420°F, the system pressure is 62 psig. For the maximum temperature accident condition, the normal condition gas release fractions are combined with a conservative accident average gas temperature of 510°F to calculate a system pressure of 13 psig.

The stresses that result in the Canister due to the internal pressure are evaluated using the ANSYS finite element model described in Section 3.A.5.1.3. The bounding pressure used for the model is 100 psig.

The resulting maximum Canister stresses for accident pressure loads are summarized in Tables 11.A.2.1-1 and 11.A.2.1-2 for primary membrane and primary membrane plus bending stresses, respectively.

The resulting maximum Canister stresses and margins of safety for combined normal handling and maximum accident internal pressure (100 psig) are summarized in Tables 11.A.2.1-3 and 11.A.2.1-4 for primary membrane and primary membrane plus bending stresses, respectively.

The sectional stresses shown in Tables 11.A.2.1-1 through 11.A.2.1-4 at 15 axial locations are obtained for each angular division of the model (a total of 35 angular locations for each axial location). The locations of the stress sections are shown in Figure 3.A.5-2.

All margins of safety are positive. Consequently, there is no adverse consequence to the Canister as a result of the combined normal handling and maximum accident internal pressure (100 psig).

Table 11.A.2.1-1 Canister Accident Internal Pressure (100 psig) – Primary Membrane (P_m) Stresses (ksi)

Section[1]	Component Stresses (ksi)						S_{int}	S_{allow}	MS
	S_x	S_y	S_z	S_{xy}	S_{yz}	S_{xz}			
1	-0.12	2.47	6.70	-0.03	-0.01	-0.45	6.88	47.44	5.90
2	5.95	-7.86	-2.24	-0.59	0.08	-1.54	14.14	47.44	2.35
3	0.04	-9.29	3.27	0.11	0.01	0.94	12.81	47.32	2.69
4	-0.04	6.53	3.25	0.32	0.00	0.00	6.60	45.77	5.93
5	-0.04	6.54	3.25	0.32	0.00	0.00	6.60	45.50	5.89
6	-0.05	6.55	3.25	-0.08	0.00	0.00	6.60	45.25	5.86
7	-0.05	6.55	3.25	-0.08	0.00	0.00	6.60	45.59	5.91
8	-0.04	6.53	3.25	0.32	0.00	0.00	6.60	45.92	5.96
9	-0.04	6.26	3.25	0.30	0.00	0.03	6.33	47.68	6.53
10	-1.00	0.55	0.35	0.07	0.00	-0.10	1.56	47.90	29.70
11	0.06	0.92	0.69	-0.01	-0.01	-1.20	2.48	38.30[2]	14.44
12	0.69	1.05	-0.40	0.02	-0.01	-0.09	1.45	47.90	31.99
13	0.14	1.14	0.53	0.05	0.01	-0.16	1.07	47.91	43.87
14	-0.05	-0.05	-0.05	0.00	-0.01	0.00	0.01	47.58	+LARGE
15	0.64	0.64	-0.05	0.00	0.00	0.00	0.69	46.89	67.36

1 See Figure 11.A.1.3-2 for definition of locations of stress sections and the components shown are in the cylindrical coordinate system.

2 Allowable stress includes reduction factor for closure lid weld, 0.8 × allowable stress.

Table 11.A.2.1-2 Canister Accident Internal Pressure (100 psig) – Primary Membrane plus Bending ($P_m + P_b$) Stresses (ksi)

Section[1]	Component Stresses (ksi)						S_{int}	S_{allow}	MS
	S_x	S_y	S_z	S_{xy}	S_{yz}	S_{xz}			
1	2.59	-2.07	20.73	-0.20	0.00	0.85	22.85	69.42	2.04
2	2.54	-21.64	-43.65	0.28	-0.04	-3.93	46.85	69.42	0.48
3	0.84	-6.45	11.91	0.08	0.01	1.10	18.47	69.08	2.74
4	-0.09	6.60	3.25	-0.08	0.00	0.00	6.70	65.43	8.77
5	-0.09	6.60	3.25	-0.08	0.00	0.00	6.70	65.03	8.71
6	-0.09	6.60	3.25	-0.08	0.00	0.00	6.69	64.66	8.66
7	-0.09	6.60	3.25	-0.08	0.00	0.00	6.69	65.17	8.74
8	-0.08	6.59	3.26	0.32	0.00	0.00	6.70	65.65	8.80
9	0.00	6.70	4.83	0.32	0.00	0.02	6.73	70.09	9.41
10	-1.96	0.09	-0.24	-0.02	0.00	-0.43	2.15	70.71	31.91
11	1.15	1.71	2.37	0.03	0.08	-1.98	4.16	50.53[2]	11.15
12	1.89	1.51	-0.26	0.00	0.00	-0.01	2.15	70.71	31.94
13	-1.37	0.65	0.32	0.09	0.00	-0.09	2.03	70.76	33.84
14	2.13	2.13	0.00	0.00	-0.01	0.00	2.13	69.80	31.80
15	27.78	27.84	-0.03	-0.01	0.00	0.00	27.87	67.88	1.44

1 See Figure 11.A.1.3-2 for definition of locations of stress sections and the components shown are in the cylindrical coordinate system.

2 Allowable stress includes reduction factor for closure lid weld, 0.8 × allowable stress.

Table 11.A.2.1-3 Canister Normal Handling plus Accident Internal Pressure (100 psig) Primary Membrane (P_m) Stresses (ksi)

Section[1]	Component Stresses (ksi)						S_{int}	S_{allow}	MS
	S_x	S_y	S_z	S_{xy}	S_{yz}	S_{xz}			
1	-0.15	2.99	8.13	-0.04	-0.01	-0.53	8.35	47.44	4.68
2	7.21	-9.86	-2.65	0.18	-0.02	-1.88	17.42	47.44	1.72
3	0.05	-12.37	4.03	0.14	0.01	1.14	16.71	47.32	1.83
4	-0.04	6.54	4.01	0.32	0.00	0.00	6.60	45.77	5.93
5	-0.04	6.54	4.00	0.32	0.00	0.00	6.60	45.50	5.89
6	-0.03	6.53	3.99	0.32	0.00	0.00	6.60	45.25	5.86
7	-0.03	6.54	3.97	0.32	0.00	0.00	6.60	45.59	5.91
8	-0.04	6.54	3.93	0.32	0.00	0.00	6.60	45.92	5.95
9	-0.04	6.25	3.86	0.30	0.00	0.03	6.32	47.68	6.55
10	-1.23	0.95	0.58	-0.03	-0.01	-0.33	2.25	47.90	20.31
11	0.02	1.09	0.12	-0.01	-0.02	-1.71	3.41	38.30[2]	10.23
12	1.18	1.71	-0.55	-0.01	0.00	-0.12	2.27	47.90	20.09
13	0.38	1.83	0.79	-0.02	-0.01	-0.25	1.57	47.91	29.48
14	-0.05	-0.05	-0.05	0.00	-0.01	0.00	0.01	47.58	+LARGE
15	0.76	0.76	-0.06	0.00	0.00	0.00	0.82	46.89	56.38

1 See Figure 11.A.1.3-2 for definition of locations of stress sections and the components shown are in the cylindrical coordinate system.

2 Allowable stress includes reduction factor for closure lid weld, 0.8 × allowable stress.

Table 11.A.2.1-4 Canister Normal Handling plus Accident Internal Pressure (100 psig) Primary Membrane plus Bending ($P_m + P_b$) Stresses (ksi)

Section[1]	Component Stresses (ksi)						S_{int}	S_{allow}	MS
	S_x	S_y	S_z	S_{xy}	S_{yz}	S_{xz}			
1	3.11	-2.84	25.15	0.06	0.00	1.03	28.04	69.42	1.48
2	3.07	-26.53	-52.82	0.34	-0.05	-4.78	56.71	69.42	0.22
3	1.03	-8.78	15.04	0.11	0.02	1.34	23.95	69.08	1.88
4	-0.08	6.65	4.03	0.33	0.00	0.00	6.76	65.43	8.67
5	-0.08	6.69	4.04	0.33	0.00	0.00	6.80	65.03	8.57
6	-0.08	6.71	4.03	0.33	0.00	0.00	6.81	64.66	8.49
7	-0.08	6.72	4.02	0.33	0.00	0.00	6.83	65.17	8.54
8	-0.08	6.71	3.98	0.33	0.00	0.00	6.83	65.65	8.62
9	0.00	6.67	5.39	0.32	-0.01	0.02	6.70	70.09	9.47
10	-2.38	0.07	-1.20	-0.03	-0.01	-0.84	2.89	70.71	23.47
11	0.88	1.80	1.98	-0.01	-0.03	-2.65	5.41	56.53[2]	9.45
12	2.91	2.38	-0.36	0.00	0.01	-0.01	3.27	70.71	20.63
13	-1.86	1.12	0.50	-0.03	0.00	-0.14	2.99	70.76	22.66
14	-2.53	-2.53	-0.10	-0.01	-0.01	0.00	2.43	69.80	27.67
15	34.33	34.41	-0.04	-0.01	0.00	0.00	34.44	67.88	0.97

1 See Figure 11.A.1.3-2 for definition of locations of stress sections and the components shown are in the cylindrical coordinate system.

2 Allowable stress includes reduction factor for closure lid weld, 0.8 × allowable stress.

11.A.2.2 Failure of All Fuel Rods With a Ground Level Breach of the Canister

As no mechanistic failure of the Canister occurs, there is no credible leakage of radioactive material from the Canister. Therefore, this potential accident condition is not evaluated.

11.A.2.3 Fresh Fuel Loading in the Canister

This section evaluates the effects of an inadvertent loading of up to 21 fresh, unburned PWR fuel assemblies in a Canister. There are no adverse effects on the Canister due to this event since the criticality control features of the UNITAD Storage System ensure that the k_{eff} of the fuel is less than 0.95 for all loading conditions of fresh fuel.

The cause, detection, analysis, corrective action and radiological impact of this event for the UNITAD Storage System are essentially the same as those discussions provided for the NAC-UMS® Storage System in FSAR Sections 11.2.3.1, 11.2.3.2, 11.2.3.3, 11.2.3.4 and 11.2.3.5, except that only 21 PWR fuel assemblies are considered.

11.A.2.4 24-inch Drop of Vertical Concrete Cask

This analysis evaluates a loaded Vertical Concrete Cask for a 24-inch drop onto a concrete storage pad. The Concrete Cask containing the Canister loaded with PWR fuel is identified as the heaviest cask, and is conservatively used in the analysis as the bounding case. The results of the evaluation show that neither the Concrete Cask nor the Canister experiences significant adverse effects due to the 24-inch drop accident.

The cause, detection, corrective action and radiological impact of this event for the UNITAD Storage System are essentially the same as those discussions provided for the NAC-UMS® Storage System in FSAR Sections 11.2.4.1, 11.2.4.2, 11.2.4.4 and 11.2.4.5.

11.A.2.4.1 Analysis of the 24-inch Concrete Cask Drop Event for the UNITAD Storage System

In the 24-inch bottom drop of the concrete cask, the cylindrical portion of the concrete is in contact with the steel bottom plate that is a part of the base weldment. The plate is assumed to be part of an infinitely rigid storage pad. No credit is taken for the crush properties of the storage pad or the underlying soil layer. Therefore, energy absorbed by the crushing of the cylindrical concrete region of the concrete cask equals the product of the compressive strength of the concrete, the crush depth of the concrete, and the projected area of the concrete cylinder. Crushing of the concrete continues until the energy absorbed equals the potential energy of the cask at the initial drop height. The

Canister is not rigidly attached to the concrete cask, so it is not considered to contribute to the concrete crushing. The energy balance equation is:

$$w(h+\delta) = P_o A\delta,$$

where:

h = 24 in., the drop height,
δ = the crush depth of the concrete cask,
P_o = 4000 psi, the compressive strength of the concrete,
A = $\pi(R_1^2 - R_2^2)$ = 7,841 in^2, the projected area of the concrete shield wall,
w = 196,000 lbs (concrete ≅ 170,000 lbs plus reinforcing steel ≅ 6,010 lbs bounding concrete plus rebar)

It is assumed that the maximum force that can be exerted on the concrete cask is the compressive strength of the concrete multiplied by the area of the concrete being crushed. The concrete cask's steel shell will not experience any significant damage during a 24-inch drop. Therefore, its functionality will not be impaired due to the drop.

The crush distance computed from the energy balance equation is:

$$\delta = \frac{hw}{P_o A - w} = \frac{(24)(196{,}000)}{(4000)(7{,}841)-(196{,}000)} = 0.15 \text{ inch}$$

where, w = 196,000 lbs (the highest bounding weight is used to obtain the maximum deformation)

The resultant inlet deformation is 0.135 inch.

Evaluation of the Pedestal for a 24-inch Bottom End Drop

Upon a bottom end impact of the concrete cask, the canister produces a force on the base weldment located near the bottom of the cask (see Figure 11.A.2.4-1). To determine the resulting acceleration of the canister and deformation of the pedestal, a LS-DYNA analysis is used.

A quarter-symmetry model of the base weldment is built using the ANSYS preprocessor (see Figure 11.A.2.4-1). The model is constructed of 8-node bricks and 4-node shell elements. Symmetry conditions are applied along the plane of symmetries. A disk of brick elements located on top of the pedestal plate represent the loaded canister. The impact plane is represented as a rigid plane, which

is considered conservative, since the energy absorption due to the impact plane is neglected (infinitely rigid). To determine the maximum acceleration and deformation, an impact analysis is solved using LS-DYNA program.

The pedestal materials are modeled using LS-DYNA's bilinear plasticity model. The stress-strain data was obtained from the Atlas of Stress-Strain Curves [44].

The maximum acceleration of the Canister during the 24-inch bottom end impact is 24.3g. The resulting acceleration time history of the bottom canister plate, which correspond to a filter frequency of 200 Hz, are shown in Figure 11.A.2.4-2.

The filter frequency used in the LS-DYNA evaluation is determined by performing a modal analysis of a quarter-symmetry model of the base weldment. Symmetry boundary conditions are applied on the planes of symmetry of the model. The analysis results in a modal frequency less than 200 Hz. Therefore, a filter frequency of 200 Hz is selected.

Results of the LS-DYNA analysis show that the maximum deformation of the base weldment is about 0.7 inch. This deformation is small when compared to the 4.5-inch height of the air inlet. Therefore, a 24-inch drop of the concrete cask does not result in a blockage of the air inlets.

The dynamic response of the Canister and basket on impact is amplified by the most flexible components of the system. In the case of the Canister and basket, the basket support disk bounds this response. To account for the transient response of the support disk, a dynamic load factor (DLF) for the support disk is computed for the inertia loading developed during the deceleration of the canister bottom plate. The DLF is determined using the axial modal frequency of the finite element model of the PWR basket disk. The fundamental modal frequency of the disk is 45 Hz. Using a triangular loading, the DLF for the basket is 1.18.

Therefore, multiplying the calculated accelerations by the DLF results in effective accelerations of 28.7g for the PWR canister. These values are enveloped by the 60g acceleration employed in the stress evaluation of the end impact of the canister and support disks. These accelerations are considered to be bounding since they incorporate the effect of the strain rate on the plastic behavior of the pedestal and ignore any energy absorption by the impact plane.

Canister Stress Evaluation

The Canister stress evaluation for the concrete cask 24-inch bottom end drop accident is performed using a load of 60g. This Canister evaluation is performed using the ANSYS finite element

program. The construction and details of the finite element model are described in Section 3.A.5.1 and shown in Figure 11.A.2.4-1. Displacement constraints are applied to the plane of symmetry in the z-direction and the canister nodes on the bottom of the bottom plate in the y-direction to represent the bottom of the VCC cavity. Stress evaluations are performed with and without an internal pressure of 15 psig.

The principal components of the Canister are the canister shell, including the bottom plate, the fuel basket and the closure lid. The structural design criteria for the Canister are contained in the ASME Code, Section III, Subsection NB. This analysis shows that the structural components of the Canister (shell, bottom plate and closure lid) satisfy the allowable stress intensity limits.

The results of the bounding Canister analysis for the 60g bottom end impact loading are presented in Tables 11.A.2.4-1 through 11.A.2.4-4.

A cross-section of the Canister showing the section locations is presented in Figure 3.A.5-2. For the Canister-to-closure lid weld (Section 11, Figure 3.A.5-2.), base metal properties are used to define the allowable stress limits since the tensile properties of the weld filler metal are greater than those of the base metal. The allowable stress at Section 11 is multiplied by a stress reduction factor of 0.8 in accordance with Nuclear Regulatory Commission Interim Staff Guidance (ISG) No. 15 [60].

The allowable stresses presented in Tables 11.A.2.4-1 through 11.2.4-4 are for Type 304 stainless steel. The allowable stresses used correspond to the temperatures associated with the normal condition temperature distribution discussed in Section 3.A.5.1.1.

Canister Buckling Evaluation

The Canister is a constrained cylinder. At the Canister inner diameter, the basket support disks can prevent radial motion of the shell since the in-plane basket support disk stiffness is significantly larger than the lateral bending stiffness of the 0.5 inch Canister shell. At the Canister outer diameter, the standoffs attached to the inner liner of the concrete cask prevent outward radial motion of the Canister shell. This limits the buckling shape to "diamond shape buckles of local character" (from Blake, Reference [52]). The ability for this buckling mode to occur is evaluated using [52]. The critical stress for the occurrence of this buckling mode is computed (using a conservative temperature of 750°F) by:

$$S_{cr} = E\frac{(0.605-10^{-7}m^2)}{m(1+0.004\Phi)} = 24.4\cdot 10^6\frac{(0.605-10^{-7}\times 66^2)}{66\times(1+0.004\times 1{,}410)} = 33{,}660\,psi$$

where:

m=ratio of the mean radius of canister shell to the canister shell thickness
m=33/0.5 = 66
Φ= ratio of modulus of elasticity to the yield stress (at 750°F)
$\Phi=24.4\cdot 10^6/17{,}300$
Φ=1,410

From the axial sections 3 through 9 (Figure 11.A.1.3-2), the maximum compressive membrane axial stress (Z component) is 7.8 ksi (from Table 11.A.2.4-3). The margin of safety for the Canister shell not to develop local diamond-shaped buckling is

M.S. = 33.6/7.8-1
M.S.= + 3.3

This confirms that the Canister shell under the 60g end drop loading will not result in buckling damage to the Canister shell.

Basket Stress Evaluation

Stresses in the support disks are calculated by applying the accident loads to the ANSYS finite element model shown in Figure 11.A.2.4-3. The model is constructed with SHELL63 elements, and using symmetry, only a 90-degree or quarter-segment is modeled, with the appropriate symmetry boundary conditions applied to the edges of the model as indicated in Figure 11.A.2.4-3. Axial support of the model is provided around the tie rod holes using CONTACT52 elements. An inertial load of 60g is conservatively applied to the support disks and weldments in the axial (out-of-plane) direction. The stress evaluations for the support disk and weldments are performed according to ASME Code, Section III, Subsection NG. For accident conditions, Level D allowable stresses are used: the allowable stress is $0.7S_u$ and S_u for P_m and P_m+P_b stress categories, respectively. Allowable stresses are conservatively determined at a temperature of 750°F. Stresses are evaluated at the section locations in the support disk shown in Figure 11.A.2.4-4.

The maximum P_m+P_b stress has a calculated value of 25.1 ksi at section 5. The allowable stress is 55.8 ksi, which provided a margin of safety of 1.22. The P_m stresses for the disks and weldments

are essentially zero, since there are no loads in the plane of the support disk or weldment for a bottom end impact. The stress results for the support disk are considered to bound the top end weldment stresses since the top weldment has a system of stiffeners and would reduce the stress in the top end weldment.

Summary of Results

Evaluation of the basket and Canister during a 24-inch drop accident show that the margins of safety are positive, confirming that the Canister and basket will maintain confinement and the fuel configuration.

Figure 11.A.2.4-1 LS-DYNA Model for the 24-inch VCC End Drop

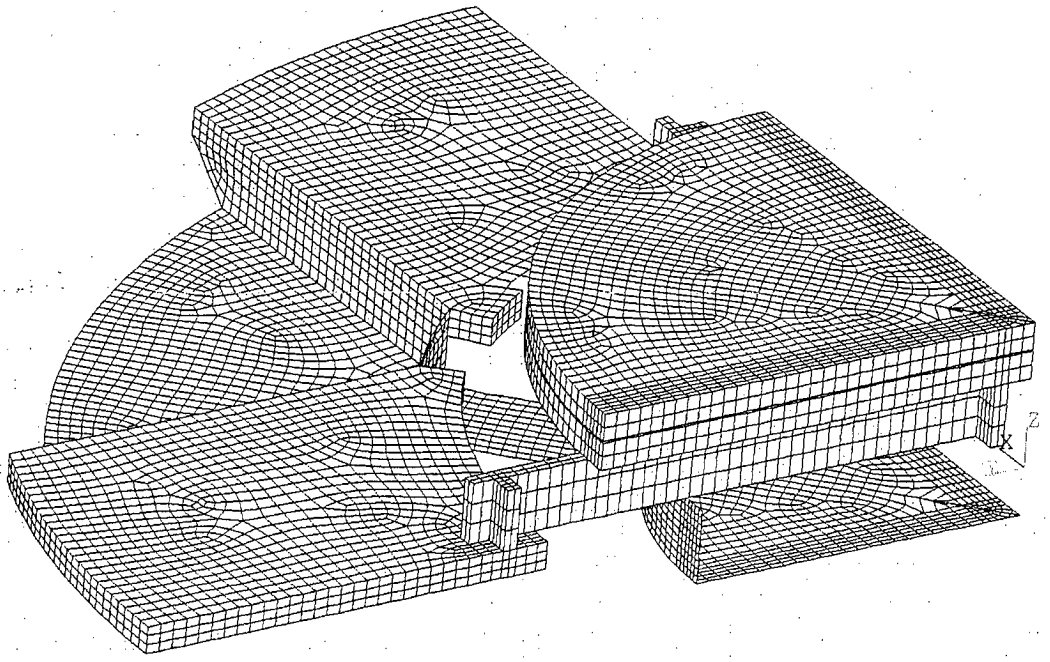

Figure 11.A.2.4-2 Acceleration Time History (g's) for the 24-inch VCC End Drop

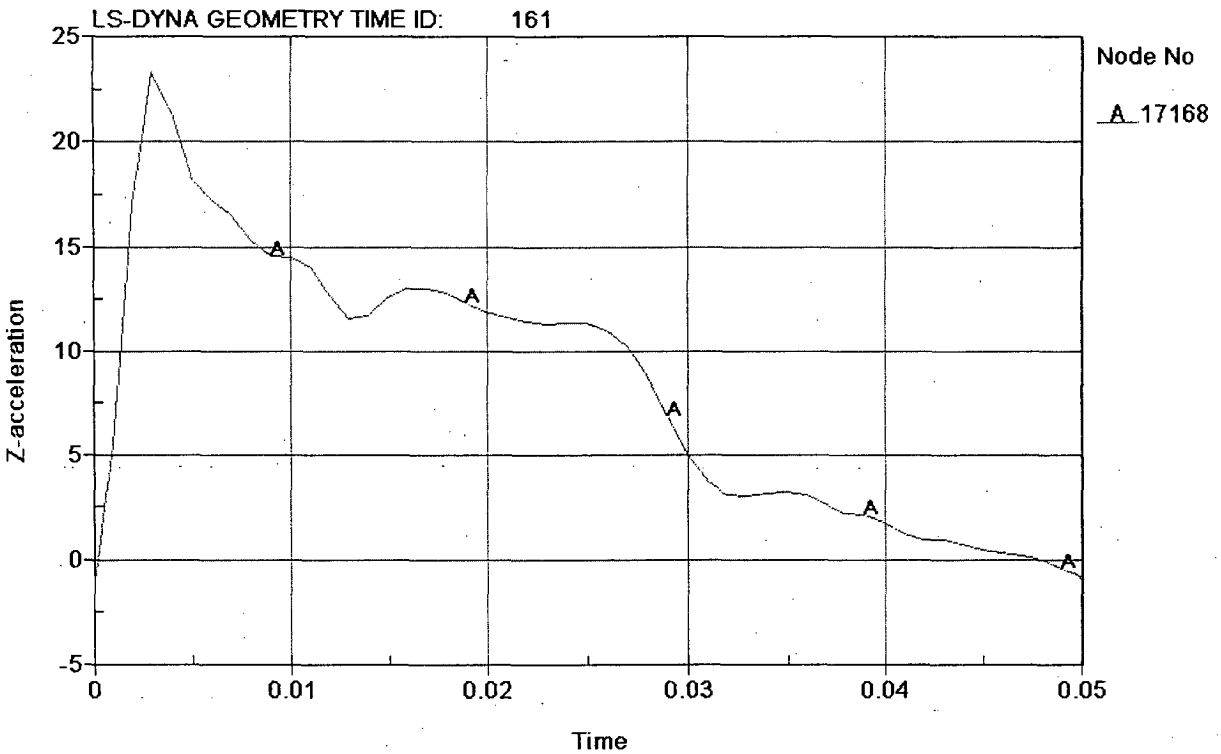

Figure 11.A.2.4-3 Basket Support Disk Finite Element Model for 24-inch Drop

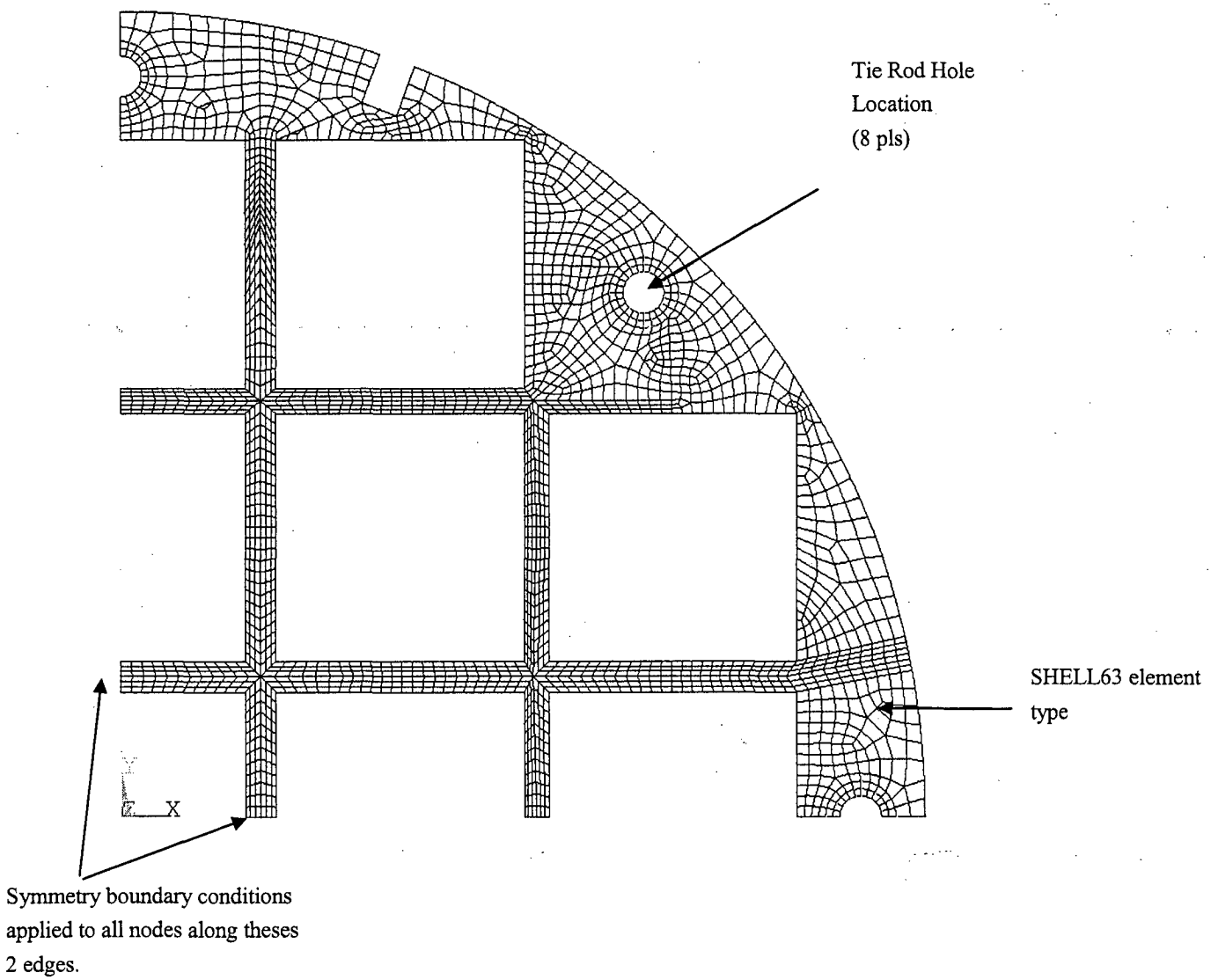

Figure 11.A.2.4-4 Basket Support Disk Model Section Locations

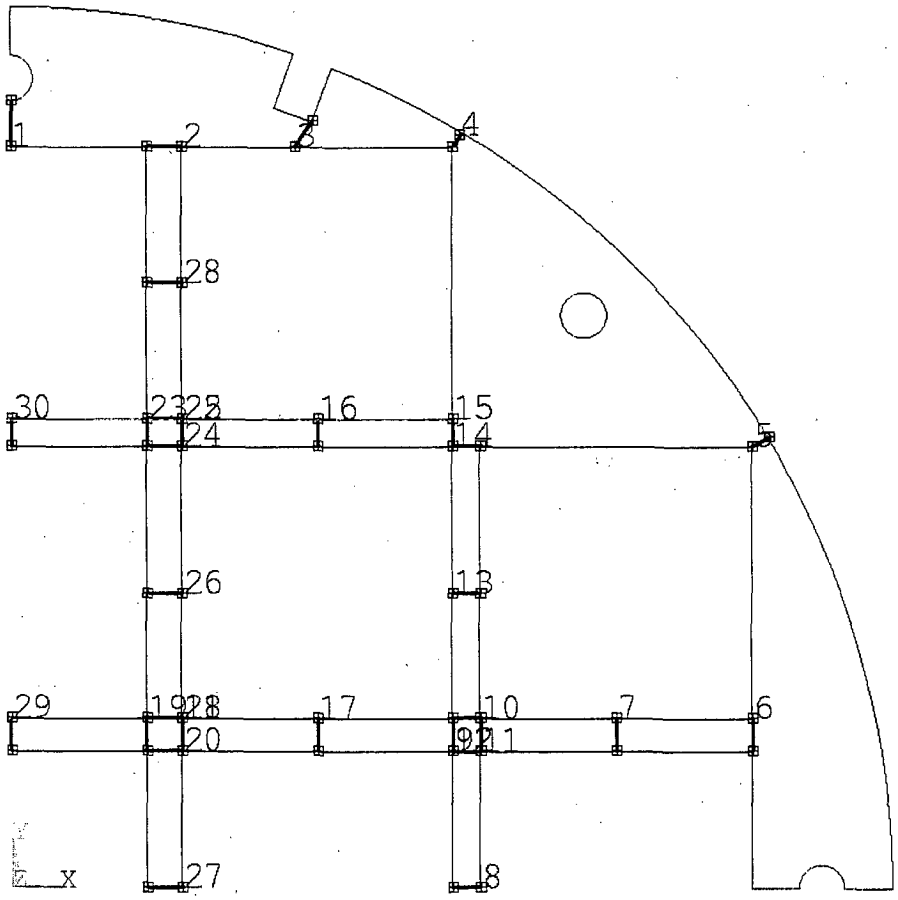

Table 11.A.2.4-1 Canister P_m Stresses During a 60g Bottom Impact (15 psig Internal Pressure)

Section[1]	Component Stresses (ksi)						S_{int}	S_{allow}	MS
	S_x	S_y	S_z	S_{xy}	S_{yz}	S_{xz}			
1	-0.03	-0.79	-3.98	-0.04	0.02	-0.44	4.05	47.44	10.71
2	0.61	-1.35	-6.89	-0.09	0.01	-0.22	7.52	47.44	5.31
3	-0.02	-0.12	-7.27	0.00	0.00	0.03	7.26	47.32	5.52
4	0.00	0.98	-6.50	0.05	0.00	0.00	7.48	45.77	5.12
5	0.00	0.98	-6.07	0.05	0.00	0.00	7.06	45.50	5.45
6	0.00	0.98	-5.66	0.05	0.00	0.00	6.65	45.25	5.81
7	-0.01	0.98	-5.40	0.05	0.00	0.00	6.38	45.59	6.15
8	-0.01	0.98	-4.88	0.05	0.00	0.00	5.86	45.92	6.83
9	0.00	1.11	-4.14	0.05	0.00	0.02	5.26	47.68	8.07
10	0.73	-1.01	-0.90	0.02	0.01	0.92	2.47	47.90	18.43
11	0.14	-0.05	2.38	-0.01	-0.09	1.78	4.21	38.30[2]	8.10
12	-1.93	-1.63	0.54	0.00	0.00	0.10	2.48	47.90	18.35
13	-0.99	-1.79	-0.95	-0.04	-0.03	0.33	1.16	47.91	40.41
14	-0.01	-0.01	-0.01	0.00	0.01	0.00	0.01	47.58	+LARGE
15	0.08	0.08	-1.26	0.00	0.00	0.00	1.33	46.89	34.16

1 See Figure 11.A.1.3-2 for definition of locations of stress sections and the components shown are in the cylindrical coordinate system.

2 Allowable stress includes reduction factor for closure lid weld, 0.8 × allowable stress..

Table 11.2.4-2 Canister $P_m + P_b$ Stresses During a 60g Bottom Impact (15 psig Internal Pressure)

Section[1]	Component Stresses (ksi)						S_{int}	S_{allow}	MS
	S_x	S_y	S_z	S_{xy}	S_{yz}	S_{xz}			
1	0.58	-0.42	-3.63	-0.05	0.04	-0.63	4.39	69.42	14.81
2	0.01	-2.36	-9.61	-0.11	0.00	0.00	9.62	69.42	6.22
3	0.03	-0.34	-8.04	-0.02	0.00	0.03	8.07	69.08	7.56
4	-0.01	0.99	-6.50	0.05	0.00	0.00	7.49	65.43	7.74
5	-0.01	0.99	-6.07	0.05	0.00	0.00	7.06	65.03	8.21
6	-0.01	0.99	-5.67	0.05	0.00	0.00	6.65	64.66	8.72
7	-0.01	0.99	-5.40	0.05	0.00	0.00	6.39	65.17	9.20
8	-0.01	0.99	-4.88	0.05	0.00	0.00	5.87	65.65	10.18
9	-0.01	0.92	-4.78	0.04	0.00	0.02	5.70	70.09	11.29
10	0.16	-2.61	-5.57	-0.13	-0.02	0.30	5.77	70.71	11.25
11	1.27	0.34	2.05	-0.05	-0.12	2.25	4.58	56.53[2]	11.34
12	-3.82	-2.33	0.36	0.00	0.00	0.01	4.18	70.71	15.93
13	1.69	-0.93	-0.65	-0.10	-0.01	0.18	2.64	70.76	25.80
14	2.60	2.60	-0.01	0.00	0.01	0.00	2.60	69.80	25.79
15	0.07	0.07	-1.27	0.00	0.00	0.00	1.34	67.88	49.58

1 See Figure 11.A.1.3-2 for definition of locations of stress sections and the components shown are in the cylindrical coordinate system.

2 Allowable stress includes reduction factor for closure lid weld, 0.8 × allowable stress.

Table 11.A.2.4-3 Canister P_m Stresses During a 60g Bottom Impact (0 psig Internal Pressure)

Section[1]	Component Stresses (ksi)						S_{int}	S_{allow}	MS
	S_x	S_y	S_z	S_{xy}	S_{yz}	S_{xz}			
1	-0.04	-0.90	-4.29	-0.04	0.03	-0.47	4.36	47.44	9.87
2	0.51	-1.50	-7.23	-0.09	0.01	-0.22	7.76	47.44	5.11
3	-0.01	-0.67	-7.76	-0.03	0.00	0.01	7.75	47.32	5.11
4	0.00	0.00	-6.99	0.00	0.00	0.00	6.99	45.77	5.55
5	0.00	0.00	-6.56	0.00	0.00	0.00	6.56	45.50	5.94
6	0.00	0.00	-6.15	0.00	0.00	0.00	6.15	45.25	6.36
7	0.00	0.00	-5.89	0.00	0.00	0.00	5.89	45.59	6.75
8	0.00	0.00	-5.37	0.00	0.00	0.00	5.37	45.92	7.55
9	0.00	0.17	-4.63	0.01	0.00	0.02	4.80	47.68	8.93
10	0.88	-1.09	-0.96	0.02	0.01	0.94	2.63	47.90	17.24
11	0.13	-0.19	2.28	-0.02	-0.10	1.96	4.47	38.30[2]	7.57
12	-2.03	-1.78	0.59	0.00	0.00	0.12	2.64	47.90	17.14
13	-1.01	-1.96	-1.03	-0.05	-0.03	0.35	1.30	47.91	35.76
14	0.00	0.00	0.00	0.00	0.01	0.00	0.02	47.58	+LARGE
15	0.06	0.06	-1.24	0.00	0.00	0.00	1.30	46.89	35.01

1 See Figure 11.A.1.3-2 for definition of locations of stress sections and the components shown are in the cylindrical coordinate system.

2 Allowable stress includes reduction factor for closure lid weld, 0.8 × allowable stress.

Table 11.A.2.4-4 Canister $P_m + P_b$ Stresses During a 60g Bottom Impact (0 psig Internal Pressure)

Section[1]	Component Stresses (ksi)						S_{int}	S_{allow}	MS
	S_x	S_y	S_z	S_{xy}	S_{yz}	S_{xz}			
1	0.56	-0.62	-4.23	-0.06	0.04	-0.71	4.99	69.42	12.91
2	-0.05	-2.29	-9.27	-0.11	0.00	0.07	9.23	69.42	6.52
3	0.02	-0.87	-8.41	-0.04	0.00	0.01	8.43	69.08	7.20
4	0.00	0.00	-6.99	0.00	0.00	0.00	6.99	65.43	8.36
5	0.00	0.00	-6.56	0.00	0.00	0.00	6.56	65.03	8.91
6	0.00	0.00	-6.15	0.00	0.00	0.00	6.15	64.66	9.51
7	0.00	0.00	-5.89	0.00	0.00	0.00	5.89	65.17	10.07
8	0.00	0.00	-5.37	0.00	0.00	0.00	5.37	65.65	11.23
9	0.01	0.05	-5.03	0.00	0.00	0.02	5.08	70.09	12.81
10	0.17	-2.76	-5.71	-0.14	-0.02	0.27	5.91	70.71	10.96
11	1.10	0.08	1.70	-0.05	-0.13	2.55	5.14	56.53[2]	10.00
12	-4.10	-2.56	0.40	0.00	0.00	0.01	4.50	70.71	14.72
13	1.90	-1.02	-0.70	-0.12	-0.01	0.19	2.94	70.76	23.03
14	2.93	2.93	0.01	0.00	0.01	0.00	2.92	69.80	22.87
15	0.05	0.05	-1.26	0.00	0.00	0.00	1.31	67.88	50.80

1 See Figure 11.A.1.3-2 for definition of locations of stress sections and the components shown are in the cylindrical coordinate system.

2 Allowable stress includes reduction factor for closure lid weld, 0.8 × allowable stress.

11.A.2.5 Explosion

The analysis of a design basis flood presented in Section 11.A.2.9 shows that the flood exerts a pressure of 22 psig on the Canister, and that the UNITAD Storage System experiences no adverse effects due to this pressure. The pressure of 22 psig is considered to bound any pressure due to an explosion occurring in the vicinity of the ISFSI.

The cause and detection, corrective action and radiological impact of this event for the UNITAD Storage System are essentially the same as those discussions provided for the NAC-UMS® Storage System in FSAR Sections 11.2.5.1, 11.2.5.3 and 11.2.5.4.

11.A.2.5.1 Analysis of the Explosion Event for the UNITAD Storage System

Pressure due to an explosion event is bounded by the pressure effects of a flood having a depth of 50 feet. The Canister shell is evaluated in Section 11.A.2.9 for the effects of the flood having a depth of 50 feet, and the results are summarized in Tables 11.A.2.9-1 and 11.A.2.9-2.

There is no adverse consequence to the Canister as a result of the 22 psig pressure exerted by a design basis flood. This pressure conservatively bounds an explosion event.

11.A.2.6 Fire Accident

This section evaluates the effects of a bounding condition hypothetical fire accident, although a fire accident is a very unlikely occurrence in the lifetime of the UNITAD Storage System. The evaluation demonstrates that for the hypothetical thermal accident (fire) condition the cask meets its storage performance requirements.

The cause, detection, corrective action and radiological impact of this event for the UNITAD Storage System are essentially the same as those discussions provided for the NAC-UMS® Storage System in FSAR Sections 11.2.6.1, 11.2.6.2, 11.2.6.4 and 11.2.6.5.

11.A.2.6.1 Analysis of the Fire Event for the UNITAD Storage System

The fire accident evaluation for the NAC-UMS® system was performed using a transient CFD evaluation of the heated air rising up through the annulus between the Canister and the concrete cask. The NAC-UMS® evaluation used a k-ε turbulence model, which provides a bounding computation of the heat flux into the Canister shell. The thermal mass of the UNITAD (84,800 pounds) also bounds the NAC-UMS® (72,900 pounds for the PWR) by 16 percent. Evaluation of

the UNITAD Storage System using the k-ω turbulence model would reduce the heat flux into the Canister surface during the transient fire event. Therefore, the temperature rise for the fire accident condition for the UNITAD Storage System will be bounded by the NAC-UMS® evaluation contained in Section 11.2.6. The temperature increase of the NAC-UMS® canister shell identified in Section11.2.6 due to the fire condition is 391°F-351°F or 40°F. This 40°F step is considered to be applied directly to the maximum component temperatures for the normal condition, even though the UNITAD thermal mass is 16% larger than the NAC-UMS® thermal mass. The maximum component fire accident temperatures for the UNITAD Storage System are contained in Table 11.A.2.6-1, which shows that the component temperatures are below the allowable temperatures.

Table 11.A.2.6-1 Maximum Component Temperatures (°F) During and After the Fire Accident

Component	**Maximum temperature (°F)**	**Allowable temperature (°F)**
Fuel Cladding	731	1,058
Support Disk	689	800
Heat Transfer Disk	684	750
Canister Shell	420	800
Concrete*	244	350

* Temperatures of 244°F and greater are within 3 inches of the inlet, which does not affect the operation of the concrete cask (see FSAR Section 11.2.6.3).

11.A.2.7 Maximum Anticipated Heat Load (133°F Ambient Temperature)

This section evaluates the UNITAD Storage System response to storage operation at an ambient temperature of 133°F. The condition is analyzed in accordance with the requirements of ANSI/ANS 57.9 to evaluate a credible worst-case thermal loading. A steady-state condition is considered in the thermal evaluation of the system for this accident condition.

The cause, detection, corrective action and radiological impact of this event for the UNITAD Storage System are essentially the same as those discussions provided for the NAC-UMS® Storage System in FSAR Sections 11.2.7.1, 11.2.7.2, 11.2.7.4 and 11.2.7.5.

11.A.2.7.1 Analysis of the Maximum Anticipated Heat Load Event for the UNITAD Storage System

Using the same methods and thermal models for the off-normal conditions of severe ambient temperatures (106°F and -40°F), thermal evaluations are performed for the concrete cask and the Canister with its contents for this accident condition. The principal PWR cask component temperatures for this ambient condition are:

Component	133°F Ambient Max Temp. (°F) PWR	Allowable Max Temp. (°F) PWR
Fuel Cladding	734	1058
Support Disks	692	800
Heat Transfer Disks	687	750
Canister Shell	433	800
Concrete	274	350

This evaluation shows that the component temperatures are within the allowable temperatures for the extreme ambient temperature conditions.

Thermal stress evaluations for the concrete cask are to be performed using the method and model presented in Section 3.4.4. The concrete temperature results obtained from the thermal analysis for this accident condition are to be applied to the structural model for stress calculation. The similar size and configuration of the UNITAD reinforcement to the NAC-UMS® reinforcement confirms the adequacy of the reinforcement for the UNITAD Storage System for the extreme heat condition.

11.A.2.8 Earthquake Event

This section provides an evaluation of the response of the vertical concrete cask to an earthquake imparting a horizontal acceleration of 0.25g at the top surface of the concrete pad, per NAC Document 630050-S-01, "UNITAD System Design Specification," Rev. 0, Section 3.3.2 a). This evaluation shows that the loaded or empty vertical concrete cask does not tip over or slide in the earthquake event. The vertical acceleration is defined as 2/3 of the horizontal acceleration in accordance with ASCE 4-86 [36].

The cause and detection, corrective action and radiological impact of this event for the UNITAD Storage System are essentially the same as those discussions provided for the NAC-UMS® Storage System in FSAR Sections 11.2.8.1, 11.2.8.3 and 11.2.8.4.

11.A.2.8.1 Analysis of the Earthquake Event for the UNITAD Storage System

In the event of earthquake, there exists a base shear force or overturning force due to the horizontal acceleration ground motion and a restoring force due to the vertical acceleration ground motion. This ground motion tends to rotate the concrete cask about the bottom corner at the point of rotation (at the chamfer). The horizontal moment arm extends from the center of gravity (C.G.) toward the outer radius of the concrete cask. The vertical moment arm reaches from the C.G. to the bottom of the cask. When the overturning moment is greater than, or equal to, the restoring moment, the cask will tip over. To maximize this overturning moment, the dimensions for the PWR Type 1 configuration, which has the highest C.G., are used in this evaluation. Based on the requirements presented in NUREG-0800 [22], the static analysis method is considered applicable if the natural frequency of the structure is greater than 33 cycles per second (Hz).

The combined effect of shear and flexure is computed as:

$$\frac{1}{f^2} = \frac{1}{f_f^{\,2}} + \frac{1}{f_s^{\,2}} = \frac{1}{337^2} + \frac{1}{134^2} \quad [19]$$

or

$$f = 125 \text{ Hz} > 33 \text{ Hz}$$

where:

f_f = frequency for the first free-free mode based on flexure deformation only (Hz),
f_s = frequency for the first free-free mode based on shear deformation only (Hz).

The frequency f_f is computed as:

$$F_f = \frac{\lambda^2}{2\pi L^2}\sqrt{\frac{EI}{M}} = \frac{4.730^2}{2\pi(228.1)^2}\sqrt{\frac{(3.38\times10^6)\times(1.4782\times10^7)}{2.063}} \quad [19]$$

$f_f = 337$ Hz

where:

$\lambda = 4.730$,

L = 228.1 in, length of Type 1 concrete cask (conservatively using the length of the longer cask, which results in a lower natural frequency).

$E = 3.38 \times 10^6$ psi, modulus of elasticity for bounding bulk concrete at 200°F,

$$I = \text{moment of inertia} = \frac{\pi(D_o^4 - D_i^4)}{64} = \frac{\pi\left[(136.0in)^4 - (80.0in)^4\right]}{64} = 1.4782 \times 10^7 \text{ in}^4,$$

$$\rho = \frac{145}{1728\times386.4} = 2.172 \times 10^{-4} \text{ lbm/in}^3, \text{ mass density,}$$

$M = \pi(68.0^2 - 40.0^2) \times (2.172 \times 10^{-4}) = 2.063$ lbm/in

The frequency accounting for the shear deformation is:

$$f_s = \frac{\lambda_s}{2\pi L}\sqrt{\frac{KG}{\mu}} = \frac{\pi}{2(\pi)(228.1)}\sqrt{\left(\frac{(0.5770)(1.408\times10^6)}{2.172\times10^{-4}}\right)} \quad [19]$$

$f_s = 134$ Hz

where:

$\lambda_s = \pi$,

L = 228.1 in, length of concrete cask,

$$K = \frac{6(1+\nu)(1+m^2)^2}{(7+6\nu)(1+m^2)^2 + (20+12\nu)m^2}, \text{ shear coefficient,}$$

$$= 0.5770,$$

$$\mu = \frac{145}{1728 \times 386.4} = 2.172 \times 10^{-4} \text{ lbm/in}^3, \text{ mass density of the material,}$$

$$G = \frac{0.5E}{(1+\nu)} = \frac{0.5(3.38 \times 10^6)}{(1+0.2)} = 1.408 \times 10^6 \text{ psi}, \text{ modulus of rigidity,}$$

and,

$m = R_i/R_o = 40.0 / 68.0 = 0.5882$, .

$\nu = 0.2$, Poisson's ratio for concrete.

Since the fundamental mode frequency is greater than 33 Hz, static analysis is appropriate.

11.A.2.8.2 Tip-Over Evaluation of the Vertical Concrete Cask

To maintain the concrete cask in equilibrium, the restoring moment, M_R, must be greater than, or equal to, the overturning moment, M_o (i.e. $M_R \geq M_o$). Based on this premise, the following derivation shows that 0.25g acceleration of the design basis earthquake at the surface of the concrete pad is well below the acceleration required to tip over the cask.

The combination of horizontal and vertical acceleration components is based on the 100-40-40 approach of ASCE 4-86 [36], which considers that when the maximum response from one component occurs, the response from the other two components is 40% of the maximum. According to ASCE 4-86, the vertical component of acceleration shall be obtained by scaling the corresponding ordinates of the horizontal components by two-thirds. However, the vertical component of acceleration is conservatively considered to be the same as the horizontal component of acceleration in the evaluation in this section.

Let:

$a_x = a_z = a$ = horizontal acceleration components

$a_y = a$ = vertical acceleration component

G_h = Vector sum of two horizontal acceleration components

G_v = Vertical acceleration component

There are two cases that have to be analyzed:

Case 1) The vertical acceleration, a_y, is at its peak: ($a_y = a$, $a_x = .4a$, $a_z = .4a$)

$$G_h = \sqrt{a_x^2 + a_z^2}$$

$$G_h = \sqrt{(0.4 \times a)^2 + (0.4 \times a)^2} = 0.566 \times a$$

$$G_v = 1.0 \times a_y = 1.0 \times a$$

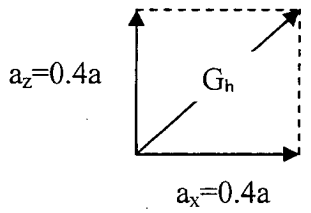

Case 2) One horizontal acceleration, a_x, is at its peak: ($a_y = .4a$, $a_x = a$, $a_z = .4a$)

$$G_h = \sqrt{a_x^2 + a_z^2}$$

$$G_h = \sqrt{(1.0 \times a)^2 + (0.4 \times a)^2} = 1.077 \times a$$

$$G_v = 0.4 \times a_y = 0.4 \times a$$

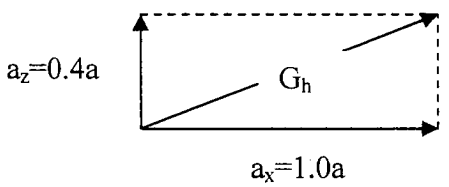

In order for the cask to resist overturning, the restoring moment, M_R, about the point of rotation, must be greater than the overturning moment, M_o, that:

$$M_R \geq M_o \text{, or}$$

$$F_r \times b \geq F_o \times d \Rightarrow (W \times 1 - W \times G_v) \times b \geq (W \times G_h) \times d$$

where:

- d = vertical distance measured from the base of the VCC to the center of gravity
- b = horizontal distance measured from the point of rotation to the C.G.
- W = the weight of the VCC
- F_o = overturning force
- F_r = restoring force

substituting for G_h and G_v gives:

Case 1

$$(1-a)\frac{b}{d} \geq 0.566 \times a$$

$$a \leq \frac{b/d}{0.566 + 1.0(b/d)}$$

Case 2

$$(1-0.4a)\frac{b}{d} \geq 1.077a$$

$$a \leq \frac{b/d}{1.077 + 0.4(b/d)}$$

Because the Canister is not attached to the concrete cask, the combined center of gravity for the concrete cask, with the Canister in its maximum off-center position, must be calculated. The point of rotation is established at the outside lower edge of the concrete cask.

The inside diameter of the concrete cask stand-off (3 × 7-1/2 S beams) is 68.0 inches and the outside diameter of the canister is 66.5 inches; therefore, the maximum eccentricity between the two is:

$$e = \frac{68\text{ in} - 66.5\text{ in}}{2} = 0.75\text{ in.}$$

The horizontal displacement, x, of the combined C.G. due to eccentric placement of the Canister is:

$$x = \frac{100{,}000 \times 0.75}{330{,}000} = 0.23\text{ in.}$$, using a bounding maximum weight of 100,000 lb for the loaded canister and a bounding maximum weight of 330,000 lb for the VCC with loaded canister.

Therefore,

$$b = 64 - 0.23 = 63.77\text{ in.}$$

$$d = 113.0\text{ in.}$$

1) $a \leq \dfrac{63.77/113.0}{0.566 + (1.0 \times 63.77/113.0)}$

$a \leq 0.499\,g$

2) $a \leq \dfrac{63.77/113.0}{1.077 + (0.4 \times 63.77/113.0)}$

$a \leq 0.433\,g$

Therefore, the minimum ground acceleration that may cause a tip-over of a loaded concrete cask is 0.43g. Since the 0.25g design basis earthquake ground acceleration is less than 0.43g, the storage cask will not tip over.

The factor of safety is 0.43 / 0.25 = 1.72, which is greater than the required factor of safety of 1.1 in accordance with ANSI/ANS-57.9 [1].

Since an empty vertical concrete cask has an equal or lower C.G., as compared to a loaded concrete cask, the tip-over evaluation for the empty concrete cask is bounded by that for the loaded concrete cask. Similarly, the Type 2 vertical concrete cask has a lower C.G. than the Type 1; therefore, the results presented bound the results for the Type 2 cask.

11.A.2.8.3 Sliding Evaluation of the Vertical Concrete Cask

For sites imposing the restriction that the Vertical Concrete Cask does not slide during a seismic event, the force holding the cask (F_s) has to be greater than or equal to the force trying to move the cask.

Based on the equation for static friction:

$$F_s = \mu N \geq G_h W$$
$$\mu\left(1 - G_v\right) W \geq G_h W$$

where:

μ = coefficient of friction
N = the normal force (weight of cask times the net vertical acceleration)
W = the weight of the concrete cask
G_v = vertical acceleration component
G_h = resultant of horizontal acceleration component

Substituting G_h and G_v for the two cases:

Case 1	Case 2
$\mu\ (1 - 1.0a) \geq 0.556a$	$\mu\ (1 - 0.4a) \geq 1.077a$

For the coefficient of friction of 0.35 [21] between the steel bottom plate of the concrete cask and the concrete surface of the storage pad:

Case 1: $0.35\times(1-a) \geq 0.566a$

$a \leq 0.38g$

Case 2: $0.35\times (1-0.4a) \geq 1.077a$

$a \leq 0.29g$

For a design acceleration of 0.25g, the minimum factor of safety (FS) for acceleration is:

$$FS = \frac{0.29g}{0.25g} = 1.16$$

The analysis shows that the minimum safety factor against cask sliding for the design earthquake accelerations is greater than 1.1 and meets the requirements of ANSI/ANS-57.9.

While the analyses presented in this section demonstrate that the minimum safety factors for sliding meet the requirements of ANSI/ANS 57.9, it should be noted that there is no safety concern with the sliding of a loaded concrete cask on the storage pad. The two possible outcomes of cask sliding are cask tip-over (see Section 11.A.2.12) and cask impact with another loaded cask. The stresses induced from the analyzed cask tip-over event far exceed those from the impact of two casks sliding into each other. Consequently, there is no safety concern with the impact of sliding casks. As a result, there is no safety concern if the designed pad coefficient of friction is reduced for any reason.

11A.2.8.4 Stress Generated in the Vertical Concrete Cask During an Earthquake Event

To demonstrate the ability of the concrete cask to withstand earthquake loading conditions, the fully loaded cask is conservatively evaluated for seismic loads of 0.5g in the horizontal direction and 0.5g in the vertical direction. These accelerations reflect a more rigorous seismic loading and, therefore, bound the design basis earthquake event. No credit is taken for the steel inner liner of the concrete cask. The maximum compressive stresses at the outer and inner surfaces of the concrete shell are conservatively calculated by assuming the vertical concrete cask to be a cantilever beam with its bottom end fixed. The maximum compressive stresses are:

$$\sigma_{v\ outer} = (M / S_{outer}) + ((1+a_y)(W_{vcc}) / A) = -122 - 52 = -174 \text{ psi},$$
$$\sigma_{v\ inner} = (M / S_{inner}) + ((1+a_y)(W_{vcc}) / A) = -72 - 52 = -124 \text{ psi},$$

where:

$a_{xR} = \sqrt{a_x^2 + a_x^2} = \sqrt{0.5^2 + 0.5^2} = 0.707g$,

Resultant horizontal direction acceleration,

a_y = 0.50 g, vertical direction acceleration,

H = 113.0 in., height of C.G of loaded VCC,

W_{vcc} = 330,000 lbf, bounding cask weight

OD = 136.0 in., concrete exterior diameter,

ID = 80.0 in., concrete interior diameter,

$A = \pi (OD^2 - ID^2) / 4 = 9500$ in.^{2},

$I = \pi (OD^4 - ID^4) / 64 = 1.48 \times 10^7$ in.^{4},

$S_{outer} = 2I / OD = 217{,}647$ in.^{3},

$S_{inner} = 2I / ID = 370{,}000$ in.^{3},

$w = a_{xR} W_{vcc} / 228.1 = 1023$ lbf / in.

$M = w (228.1)^2 / 2 = 2.66 \times 10^7$ in.-lbf,

the maximum bending moment at the support.

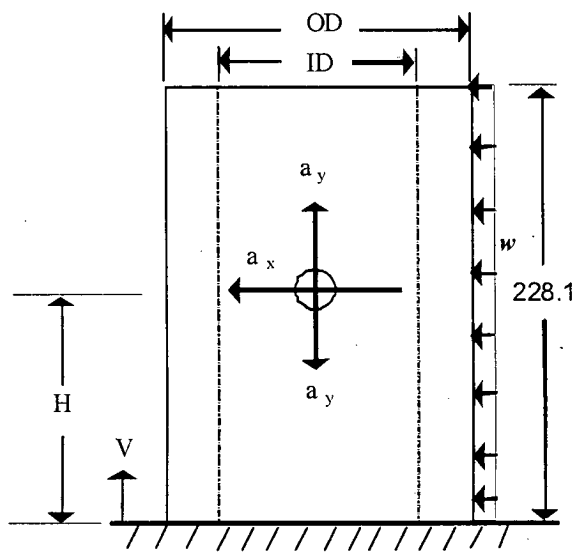

The calculated compressive stresses are used in the load combinations for the vertical concrete cask. The compressive stresses are included in Load Combinations 2, 4, 7, 8 and 10 in Table 3.A.5-18. As shown in Table 3.A.5-19, the maximum combined stresses are less than the allowable stress.

11.A.2.9 Flood

This evaluation considers design basis flood conditions of a 50-foot depth of water having a velocity of 15 feet per second. This flood depth would fully submerge the UNITAD Storage System. Analysis demonstrates that the Vertical Concrete Cask does not slide or overturn during the design-basis flood. The hydrostatic pressure exerted by the 50-foot depth of water does not produce significant stress in the Canister. The UNITAD Storage System is, therefore, not adversely impacted by the design basis flood.

Small floods may lead to a blockage of concrete cask air inlets. Full blockage of air inlets is evaluated in Section 11.A.2.13.

The cause and detection, corrective action and radiological impact of this event for the UNITAD Storage System are essentially the same as those discussions provided for the NAC-UMS® Storage System in FSAR Sections 11.2.9.1, 11.2.9.3 and 11.2.9.4.

11.A.2.9.1 Analysis of the Flood Event for the UNITAD Storage System

The concrete cask is considered to be resting on a flat level concrete pad when subjected to a flood velocity pressure distributed uniformly over the projected area of the concrete cask. Because of the concrete cask geometry and rigidity, it is analyzed as a rigid body. Assuming full submersion of the concrete cask and steady-state flow conditions, the drag force, F_D, is calculated using classical fluid mechanics for turbulent flow conditions. A safety factor of 1.1 for stability against overturning and sliding is applied to ensure that the analyses bound design basis conditions. The coefficient of friction between carbon steel and concrete used in this analysis is 0.35 [21].

Conservatively, the analysis is performed for a Canister containing no fuel. The PWR cask configuration analysis is as follows.

The buoyancy force, F_b, is calculated from the weight of water (62.4 lbs/ft^3) displaced by the fully submerged concrete cask. The displacement volume (Vol) of the concrete cask containing the canister is 1,787.5 ft^3. The displacement volume is the volume occupied by the cask and the transport canister less the free space in the central annular cavity of the concrete cask.

$$F_b = \text{Vol} \times 62.4 \text{ lbs/ft}^3$$
$$= 111{,}540 \text{ lbs.}$$

Assuming the steady-state flow conditions for a rigid cylinder, the total drag force of the water on the concrete cask is given by the formula:

$$F_{D15} = (C_D)(\rho)(V^2)\left(\frac{A}{2}\right) \qquad [24]$$

$$= 32{,}908 \text{ lbs.}$$

where:

C_D = Drag coefficient, which is dependent upon the Reynolds Number (Re). For flow velocities greater than 6 ft/sec, the value of C_D approaches 0.7 [24].

ρ = mass density of water = 1.94 slugs/ft^3

D = Concrete cask outside diameter (136.0 in. / 12 = 11.33 ft)

V = velocity of water flow (15 ft/sec)

A = projected area of the cask normal to water flow (diameter 11.33 ft × overall height 19.01 ft = 215.4 ft^2)

The drag force required to overturn the concrete cask is determined by summing the moments of the drag force and the submerged weight (weight of the cask less the buoyant force) about a point on the bottom edge of the cask. This method assumes a pinned connection, i.e., the cask will rotate about the point on the edge rather than slide. When these moments are in equilibrium, the cask is at the point of overturning.

$$F_D \times \left(\frac{h}{2}\right) = \left(W_{cask} - F_b\right) \times r$$

$$F_D = 69{,}561 \text{ lbs}$$

where:

h	=	concrete cask overall height (228.1 in or 19.01 ft)
W_{CASK}	=	concrete cask weight = (220,000 + 7800 + 7700) = 235,500 lbs (minimum bounding weight of empty VCC, plus weight of empty canister and lid)
F_b	=	buoyant force = 111,540 lbs
r	=	concrete cask baseplate radius (64.0 in. or 5.33 ft), radius to point of rotation

Solving the drag force equation for the velocity, V, that is required to overturn the concrete cask:

$$V = \sqrt{\frac{2F_D}{C_D \rho A}}$$

$$= 21.8 \text{ ft/sec.}$$

The water velocity required to overturn the concrete cask is greater than the design basis velocity of 15 ft/sec. Therefore, the concrete cask is not overturned under design basis flood conditions.

The factor of safety for overturning due to flood is:

$$FS = \frac{21.8\, ft/\sec}{15.0\, ft/\sec} = 1.45$$

To prevent sliding, the minimum coefficient of friction between the carbon steel bottom plate of the concrete cask and the concrete surface upon which it rests is:

$$\mu_{min} = \frac{F_{D15}}{F_y} = \frac{(32{,}980)\text{ lb}}{(220{,}000 + 7800 + 7700 - 111{,}540)\text{lb}} = 0.27$$

where:

F_y = the submerged weight of the concrete cask.
= $W_{cask} - F_b = 220{,}000 + 7800 + 7700 - 111{,}540 = 123{,}960$ lb

Note: F_y is determined using a bounding minimum weight of 220,000 lb for an empty VCC cask, plus weight of an empty canister, plus canister lid, less F_b (buoyancy force that includes the buoyancy effect of the canister).

The analysis shows that the minimum coefficient of friction, μ, required to prevent sliding of the concrete cask is 0.27. The coefficient of friction between carbon steel and concrete is 0.35 [21]. Therefore, the concrete cask does not slide under design basis flood conditions.

The factor of safety for sliding due to flood is:

$$FS = \frac{0.35}{0.27} = 1.30$$

The flood depth of 50 feet exerts a hydrostatic pressure on the canister and the concrete cask. The water exerts a pressure of 22 psi (50 × 62.4/144) on the canister, which results in stresses in the canister shell. Canister internal pressure is conservatively taken as 0 psi. The canister structural analysis for the increased external pressure due to flood conditions is performed using an ANSYS finite element model as described in Section 3.4.4.1.

The resulting maximum canister stresses for flood loads are summarized in Tables 11.A.2.9-1 and 11.A.2.9-2 for primary membrane and primary membrane plus bending stresses, respectively. The sectional stresses shown in Tables 11.A.2.9-1 and 11.A.2.9-2 at 15 axial locations are obtained for each angular division of the model (a total of 35 angular locations for each axial location). The locations of the stress sections are shown in Figure 3.4.4.1-4. Consequently, there is no adverse consequence to the canister as a result of the hydrostatic pressure due to the flood condition.

The concrete cask is a thick monolithic structure and is not affected by the hydrostatic pressure due to design basis flood. Nonetheless, the stresses in the concrete due to the drag force (F_D) are conservatively calculated as shown below. The concrete cask is considered to be fixed at its base.

F_D = 32,908 lbs
OD = 136.0 in. (concrete outer diameter)
ID = 80.0 in. (concrete inner diameter)
h = 228.1 in. (cask overall height)
$A = \pi (OD^2 - ID^2) / 4 = 9500$ in.^{2}
(Cross-sectional area)
$I = \pi (OD^4 - ID^4) / 64 = 1.48 \times 10^7$ in.^{4}
(Moment of Inertia)
$S_{outer} = 2I/OD = 217{,}647$ in.^{3}
(Section Modulus for outer surface)
$S_{inner} = 2I/ID = 370{,}000$ in.^{3}
(Section Modulus for inner surface)
$w = F_{D15}/h = 144.3$ lbf / in.

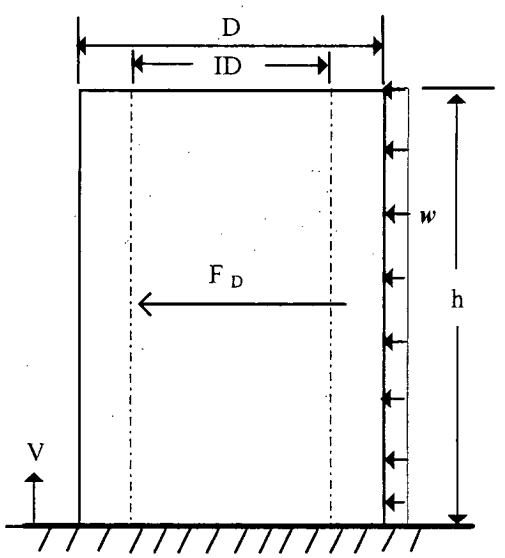

$M = w(h)^2 / 2 = 3.75\times10^6$ in.-lbs
(Bending Moment at the base)

Maximum stresses at the base surface:

$\sigma_{v\ outer} = M / S_{outer} \approx 17$ psi (tension or compression)
$\sigma_{v\ inner} = M / S_{inner} \approx 10$ psi (tension or compression)

The calculated compressive stresses are used in the load combinations for the vertical concrete cask. The compressive stresses are included in Load Combination 5A in Table 3.A.5-18. As shown in Table 3.A.5-19, the maximum combined stresses are less than the allowable stress.

Table 11.A.2.9-1 Canister Increased External Pressure (22 psi) with No Internal Pressure (0 psi) Primary Membrane (P_m) Stresses (ksi)

Section[1]	Component Stresses (ksi)						S_{int}	S_{allow}	MS
	S_x	S_y	S_z	S_{xy}	S_{yz}	S_{xz}			
1	0.00	-0.57	-1.50	0.01	0.00	0.10	1.51	47.44	30.34
2	-1.33	1.71	0.47	0.13	-0.02	0.34	3.11	47.44	14.24
3	-0.03	2.02	-0.74	-0.02	0.00	-0.21	2.82	47.32	15.79
4	-0.01	-1.46	-0.74	-0.07	0.00	0.00	1.45	45.77	30.52
5	-0.01	-1.46	-0.74	-0.07	0.00	0.00	1.45	45.50	30.33
6	-0.01	-1.46	-0.74	0.02	0.00	0.00	1.45	45.25	30.18
7	-0.01	-1.46	-0.74	0.02	0.00	0.00	1.45	45.59	30.41
8	-0.01	-1.46	-0.74	-0.07	0.00	0.00	1.45	45.92	30.62
9	-0.01	-1.40	-0.74	-0.07	0.00	-0.01	1.39	47.68	33.23
10	0.19	-0.15	-0.11	-0.02	0.00	0.02	0.35	47.90	137.78
11	-0.04	-0.23	-0.18	0.00	0.00	0.26	0.53	38.30[2]	71.26
12	-0.19	-0.26	0.06	0.00	0.00	0.01	0.32	47.90	148.99
13	-0.08	-0.28	-0.13	-0.01	0.00	0.05	0.23	47.91	205.55
14	-0.01	-0.01	-0.01	0.00	0.00	0.00	0.00	47.58	+LARGE
15	-0.16	-0.16	-0.01	0.00	0.00	0.00	0.15	46.89	309.75

[1] See Figure 11.A.1.3-2 for definition of locations of stress sections and the components shown are in the cylindrical coordinate system.

[2] Allowable stress includes reduction factor for closure lid weld, 0.8 × allowable stress.

Table 11.A.2.9-2 Canister Increased External Pressure (22 psi) with No Internal Pressure (0 psi) Primary Membrane plus Bending ($P_m + P_b$) Stresses (ksi)

Section[1]	Component Stresses (ksi)						S_{int}	S_{allow}	MS
	S_x	S_y	S_z	S_{xy}	S_{yz}	S_{xz}			
1	-0.59	0.43	-4.58	0.04	0.00	-0.19	5.03	69.42	12.81
2	-0.58	4.74	9.58	-0.06	0.01	0.87	10.31	69.42	5.73
3	-0.21	1.40	-2.64	-0.02	0.00	-0.24	4.06	69.08	16.00
4	0.00	-1.47	-0.74	0.02	0.00	0.00	1.47	65.43	43.41
5	0.00	-1.47	-0.74	0.02	0.00	0.00	1.47	65.03	43.14
6	0.00	-1.47	-0.74	0.02	0.00	0.00	1.47	64.66	42.93
7	0.00	-1.47	-0.74	0.02	0.00	0.00	1.47	65.17	43.26
8	0.00	-1.47	-0.74	-0.07	0.00	0.00	1.47	65.65	43.56
9	-0.02	-1.50	-1.09	-0.07	0.00	-0.01	1.48	70.09	46.32
10	0.40	-0.05	0.00	0.00	0.00	0.08	0.47	70.71	148.70
11	-0.28	-0.40	-0.54	-0.01	-0.02	0.43	0.90	56.53[2]	61.81
12	-0.44	-0.36	0.03	0.00	0.00	-0.01	0.47	70.71	149.29
13	0.24	-0.18	-0.09	-0.02	0.00	0.03	0.42	70.76	166.55
14	-0.49	-0.49	-0.02	0.00	0.00	0.00	0.47	69.80	148.08
15	-6.13	-6.15	-0.02	0.00	0.00	0.00	6.13	67.88	10.07

[1] See Figure 11.A.1.3-2 for definition of locations of stress sections and the components shown are in the cylindrical coordinate system.

[2] Allowable stress includes reduction factor for closure lid weld, 0.8 × allowable stress.

11.A.2.10 Lightning Strike

This section evaluates the impact of a lightning strike on the Vertical Concrete Cask. The evaluation shows that the cask does not experience adverse effects due to a lightning strike.

The Cause, Detection, Corrective Action and Radiological Impact of this event for the UNITAD Storage System are essentially the same as those discussions provided for the NAC-UMS® Storage System in FSAR Sections 11.2.10.1, 11.2.10.2, 11.2.10.4 and 11.2.10.5.

11.A.2.10.1 Analysis of the Lightning Strike Event for the UNITAD Storage System

The analysis of the lightning strike event assumes that the lightning strikes the uppermost metal surface and proceeds through the concrete cask liner to the ground. Therefore, the current path is from the lightning strike point on the outer radius of the top flange of the storage cask, down through the carbon steel inner shell and the bottom plate to the ground. The electrical current flow path results in current-induced Joulean heating along that path.

The integrated maximum current for a lightning strike is a peak current of 250 kiloamps over a period of 260 microseconds, and a continuing current of up to 2 kiloamps for 2 seconds in the case of severe lightning discharges [25].

From Joule's Law, the amount of thermal energy developed by the combined currents is given by the following expression [26]:

$$Q = 0.0009478R\left[I_1^2(dt_1) + I_2^2(dt_2)\right]$$

where:

Q = thermal energy (BTU)
I_1 = peak current (amps)
I_2 = continuing current (amps)
dt_1 = duration of peak current (seconds)
dt_2 = duration of continuing current (seconds)
R = resistance (ohms)

The maximum lightning discharge is assumed to attach to the smallest current-carrying component, that is, the top flange connected to the cask lid.

The propagation of the lightning through the carbon steel cask liner, which is both permeable and conductive, is considered to be a transient. For static conditions, the current is distributed throughout the shell. In a transient condition the current will be near the surface of the conductor. Similar to a concentrated surface heat flux incident upon a small surface area, a concentrated current in a confined area of the steel shell will result in higher temperatures than if the current were spread over the entire area, which leads to a conservative result. This conservative assumption is used by constraining the current flow area to a 90 degree sector of the circular cross section of the steel liner as opposed to the entire cross section. The depth of the current penetration (δ in meters) is estimated [27] as:

$$\delta = \frac{1}{\sqrt{\pi \mu f \sigma}} \text{ (m)}$$

where:

μ = permeability of the conductor = $100\mu_0$ ($\mu_0 = 4\pi\times10^{-7}$ Henries/m)
σ = electrical conductivity (Seimens/meter) = $1/\rho$ (Ω-m)
= 1/resistivity = $1/9.78\times10^{-8}$ (Ω-m))
f = frequency of the field (Hz)

The pulse is represented conservatively as a half sine form, so that the equivalent $f = 1/2\tau$, where τ is the referenced pulse duration. Two skin depths, corresponding to different pulse duration, are computed. The larger effective frequency will result in a smaller effective area to conduct the current. The effective resistance is computed as:

$$R = \frac{\rho\, l}{a}$$

where:

R = resistance (Ω)
ρ = resistivity = 9.78×10^{-8} (Ω-m) (for carbon steel)
l = length of conductor path=225 inches = 5.7 m
a = area of conductor at inner radius of liner (m^2) = $(\pi/4)\times \delta\times(39\times.0254)=0.77\times\delta$

Using the current level of the pulse and the duration in conjunction with using only a 90° section of the carbon steel liner, the resulting energy into the shell is computed using the equation in FSAR Section 11.2.10.1.

This thermal energy dissipation is conservatively assumed to occur in the localized volume of the carbon steel involved in the current flow path through the flange to the inner liner. Assuming no heat loss or thermal diffusion beyond the current flow boundary, the maximum temperature increase in the flange due to this thermal energy dissipation is calculated [28] as:

$$\Delta T = \frac{Q}{mc}$$

where:

ΔT = temperature change (°F)
Q = thermal energy (BTU)
C = 0.113 Btu/lbs °F (carbon steel)
m = mass (lbs)=31,000, for the inner liner of the concrete cask

The ΔT_1 for the peak current (250KA, 260 μsec) is found to be less than 0.1°F.

The ΔT_2 for the continuous current (2 kA, 2 sec) is found to be negligible (< 0.001°F).

The ΔT_1 corresponds to the increase in the maximum temperature of the steel within the current path. For the concrete to experience an increase in temperature, the heat must disperse from the steel surface throughout the steel. Therefore the increase in concrete temperature attributed to Joulean heating is not significant.

11.A.2.11 Tornado and Tornado Driven Missiles

This section evaluates the strength and stability of the Vertical Concrete Cask for a maximum tornado wind loading and for the impacts of tornado-generated missiles. The design basis tornado characteristics are selected in accordance with NUREG-0800, Sections 3.3.1, 3.3.2 and 3.5.1.4 [30].

The evaluation demonstrates that the Concrete Cask remains stable in tornado wind loading in conjunction with impact from a high-energy tornado missile. The performance of the cask is not significantly affected by the tornado event.

The cause, detection and corrective action of this event for the UNITAD Storage System are essentially the same as those discussions provided for the NAC-UMS® Storage System in FSAR Sections 11.2.11.1, 11.2.11.2 and 11.2.11.4. The radiological impact differs as the localized surface dose rates for the UNITAD Storage System are estimated to be 83 mrem/hr at the Concrete Cask surface.

11.A.2.11.1 Analysis of the Tornado and Tornado Driven Missiles Event for the UNITAD Storage System

Classical techniques are used to evaluate the loading conditions. Cask stability analysis for the maximum tornado wind loading is based on NUREG-0800 [30], Section 3.3.1, "Wind Loadings," and Section 3.3.2, "Tornado Loadings." Loads due to tornado-generated missiles are based on NUREG-0800, Section 3.5.1.4, "Missiles Generated by Natural Phenomena."

The concrete cask stability in a maximum tornado wind is evaluated based on the design wind pressure calculated in accordance with ANSI/ASCE 7-93 [31] and using classical free body stability analysis methods.

Local damage to the concrete shell is assessed using a formula developed for the National Defense Research Committee (NDRC) [32]. This formula is selected as the basis for predicting depth of missile penetration and minimum concrete thickness requirements to prevent scabbing of the concrete. Penetration depths calculated using this formula have been shown to provide reasonable correlation with test results (EPRI Report NP-440) [33].

The local shear strength of the concrete shell is evaluated on the basis of ACI 349-85 [34], and UMS® FSAR Section 11.2.11.1, discounting the reinforcing and the steel internal shell.

The cask configuration used in this analysis combines the height of the tallest cask (PWR Type 1) with the weight and center of gravity of the lightest cask (PWR Type 2). This configuration bounds all other configurations for cask stability. The cask properties considered in this evaluation are:

H = Cask Height = 228.1 in (PWR Type 1)
D_o = Cask Outside Diameter = 136.0 in

D_i = Inside Diameter of concrete shell = 80.0 in

W_{VCC} = Bounding minimum weight for an empty Vertical Concrete Cask, with lid, with optional lift lugs, no canister, basket, or fuel). = 220,000 lbs

A_c = Cross section area of concrete shell = 9,500 in^2

I_c = Moment of inertia of concrete shell = 14.78×10^6 in^4

f_c' = Compressive strength of concrete shell = 4,000 psi

Tornado Wind Loading (Concrete Cask)

The tornado wind velocity is transformed into an effective pressure applied to the cask using procedures delineated in ANSI/ASCE 7-93 Building Code Requirements for Minimum Design Loads in Buildings and Other Structures. The maximum pressure, q, is determined from the maximum tornado wind velocity as follows:

$$q = (0.00256)K(I\,V)^2 \text{ psf}$$

where:

V = Maximum tornado wind speed = 360 mph

The velocity pressure exposure coefficient for local terrain effects K and the Importance Factor I, may be taken as unity (1) for evaluating the effects of tornado wind velocity pressure. Then:

$$q = (0.00256)(360)^2 = 331.8 \text{ psf}$$

Considering that the cask is small with respect to the tornado radius, the velocity pressure is assumed uniform over the projected area of the cask. Because the cask is vented, the tornado-induced pressure drop is equalized from inside to outside and has no effect on the cask structure.

The total wind loading on the projected area of the cask, F_w is then computed as:

$$F_w = q \times G_h \times C_f \times A_f$$
$$= 47{,}020 \text{ lbs}$$

where:

q = Effective velocity pressure (psf) = 331.8 psf.

C_f = Force Coefficient = 0.51 (ASCE 7-93, Table 12 with $D\,q^{1/2} = 206.4$ for a moderately smooth surface, h/D = 19.01 ft /11.3 ft = 1.7)

A_f = Projected area of cask = (228.1 in × 136.0 in)/144 = 215.4 ft^2

G = Gust factor = 1.29 (ASCE 7-93, Table 8, for Exposure Category C)

The wind overturning moment, M_w, is computed as:

$$M_w = F_w \times H/2 = 47{,}020 \text{ lbs} \times 228.1 \text{ in}/12 \times 1/2 \cong 4.47\text{x}10^5 \text{ ft-lbs}$$

where H is the cask height.

The stability moment, M_s, of the cask (empty VCC, with lid, with optional lift lugs, no canister, no basket, and no fuel) about an edge of the base, is:

$$M_s = W_{cask} \times D_o/2 = 1.17\times10^6 \text{ ft-lbs}$$

where:

D_o = Cask base plate diameter = 128.0 in

W_{cask} = Bounding minimum cask weight (empty VCC, with lid, with optional lift lugs, no canister, basket, or fuel)

≅ 220,000 lbs

ASCE 7-93 requires that the overturning moment due to wind load shall not exceed two-thirds of the dead load stabilizing moment unless the structure is anchored. Therefore, the Factor of Safety, FS, against overturning is:

$$FS = \frac{(0.67)\times\left(1.17\times10^6\right)}{4.47\times10^5} = 1.8$$

A coefficient of friction of 0.21 (47,020/220,000) between the cask base and the concrete pad on which it rests will inhibit sliding.

Against a coefficient of friction of steel on concrete of approximately 0.35 [21], the Factor of Safety, FS, against sliding is:

$$FS = \frac{0.35}{0.21} = 1.7$$

The stresses in the concrete due to the tornado wind load are conservatively calculated below. The concrete cask is considered to be fixed at its base.

F_W = 47,020 lbs
OD = 136.0 in. (concrete outside diameter)
ID = 80.0 in. (concrete inside diameter)
H = 228.1 in. /12 = 19.01 ft
A = $\pi (OD^2 - ID^2) / 4 = 9{,}500\ in^2$
I = $\pi (OD^4 - ID^4) / 64 = 14.78\times10^6\ in^4$
(Moment of Inertia)

$$M = \frac{F_w \times H}{2} = 5.36\times10^6 \text{ in-lbs}$$

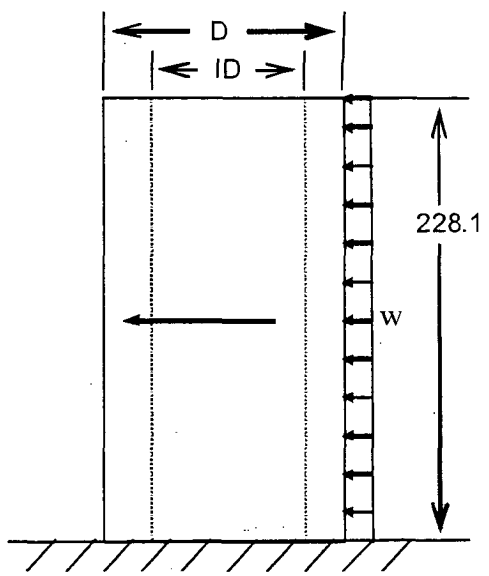

Maximum stresses:

$$\sigma_{outer} = \frac{Mc_{outer}}{I} = 25 \text{ psi (tension or compression)}$$

$$\sigma_{inner} = \frac{Mc_{inner}}{I} = 15 \text{ psi (tension or compression)}$$

where:

$c_{outer} = D_{outer}/2 = 68.0$ in.
$c_{inner} = D_{inner}/2 = 40.0$ in.

The calculated compressive stresses are used in the load combinations for the Vertical Concrete Cask. The compressive stresses due to tornado wind are included in Load Combination 5 in Table 3.A.5-18. The compressive stresses due to the tornado wind case are also conservatively used for normal wind in Load Combinations 3 and 11 in Table 3.A.5-18. As shown in Table 3.A.5-19, the maximum combined stresses are less than the allowable stress.

Tornado Missile Loading (Concrete Cask)

The Vertical Concrete Cask is designed to withstand the effects of impacts associated with postulated tornado-generated missiles identified in NUREG-0800, Section 3.5.1.4.III.4, Spectrum I

missiles [30] and also specified in NAC Document 630050-S-01, "UNITAD System Design Specification, Table 3-1. These missiles consist of: 1) a massive high kinetic energy missile (4,000 lbs automobile, with a frontal area of 20 square feet that deforms on impact); 2) a 280 lbs, 8-inch-diameter armor piercing artillery shell; and 3) a small 1-inch diameter solid steel sphere. All of these missiles are assumed to impact in a manner that produces the maximum damage at a velocity of 126 mph (35% of the maximum tornado wind speed of 360 mph). The cask is evaluated for impact effects associated with each of the above missiles.

The principal dimensions and moment arms used in this evaluation are shown in Figure 11.A.2.11-1.

The VCC has the following openings: four air inlets near the bottom and four air outlets near the top. The air inlets near the bottom are configured as a labyrinth, such that a 1-inch diameter steel sphere missile cannot enter the concrete cask interior. The four air outlets at the top are located above the top of the canister assembly, such that if a 1-inch diameter steel sphere missile entered the cask through an air outlet, it would not impinge upon the Canister, basket or fuel. Additionally, the top of the basket is protected by the canister closure lid.

Concrete Shell Local Damage Prediction (Penetration Missile)

Local damage to the cask body is assessed by using the National Defense Research Committee (NDRC) formula [32]. This formula is selected as the basis for predicting depth of penetration and minimum concrete thickness requirements to prevent scabbing. Penetration depths calculated by using this formula have been shown to provide reasonable correlation with test results [33]. The following calculation determines the penetration depth for the case of the Armor Piercing Shell with a horizontal velocity of 185.0 ft/sec

Concrete shell penetration depths are calculated as follows:

$$x = \text{Missile penetration depth} = [4KNWd^{-0.8}(V/1000)^{1.8}]^{0.5}$$

where:

d = Missile diameter = 8 in
K= Concrete penetrability factor, coefficient depending on concrete strength
$= 180/(f_c')^{1/2} = 180/(4000)^{1/2} = 2.846$
N= 1.14, Shape factor for very sharp nosed missiles
W= Missile weight = 280 lbs

V= Missile horizontal velocity = 126 mph = 185 ft/sec

$$x = \left[4KNW\left(d^{-0.8}\right)\left(\frac{V}{1000}\right)^{1.8}\right]^{0.5} = \left[4(2.846)(1.14)(280)\left(8.0^{-0.8}\right)\left(\frac{185}{1000}\right)^{1.8}\right]^{0.5}$$

= 5.75 inches

The parameter x/d = (5.75/8.0) = 0.72 < 2.0, therefore the formula for x is valid.

The minimum concrete shell thickness required to prevent scabbing is three times the predicted penetration depth of 5.75 inches based on the NDRC formula, or 17.25 inches. The concrete cask wall thickness includes 28 inches of concrete, which is more than the thickness required to prevent damage due to the penetration missile. This analysis conservatively neglects the 3.0-inch steel shell at the inside face of the concrete shell.

Closure Plate Local Damage Prediction (Penetration Missile)

The concrete cask is closed with a bolted in place 0.75-inch thick steel plate that is backed by a minimum of 5.55 inches of concrete plus a 0.25-inch thick steel plate. The following missile penetration analysis shows that the 0.75-inch steel closure plate is adequate to withstand the impact of the 280-lbs armor piercing shell missile, impacting at 70% of 126 mph, or 88.2 mph.

The perforation thickness of the closure steel plate is calculated by the Ballistic Research Laboratories Formula with K = 1, formula number 2-7, in Section 2.2 of Topical Report BC-TOP-9A, Revision 2 [35]. The vertical impact velocity is taken as 70% of the postulated horizontal velocities per NUREG-0800, Section 3.5.1.4 [30], except for the 1-inch steel sphere which is evaluated at 100% of the postulated horizontal velocity.

$$T = [0.5m_mV^2]^{2/3}/672d = 0.32 \text{ inch}$$

where:

T = Perforation thickness
m_m = Missile mass = W/g = 280 lbs/32.174 ft/sec^2 = 8.70 slugs
g = Acceleration of gravity = 32.174 ft/sec^2
V = 126 mph ×0.70 = 88.2 mph = 129.5 ft/sec
d = Missile diameter = 8.0 inches

BC-TOP-9A recommends that the plate thickness be 25% greater than the calculated perforation thickness, T, to prevent perforation. Therefore, the recommended plate thickness is:

$$T = 1.25 \times 0.32 \text{ in.} = 0.40 \text{ in.}$$

The closure plate is 0.75-inch thick; therefore, the plate is adequate to withstand the local impingement damage due to the specified armor-piercing missile.

Overall Damage Prediction for a Tornado Missile Impact (High Energy Missile)

The concrete cask is a free-standing structure. Therefore, the principal consideration in overall damage response is the potential of upsetting or overturning the cask as a result of the impact of a high energy missile. Based on the following analysis, it is concluded that the cask can sustain an impact from the defined massive high kinetic energy missile and does not overturn.

The following calculation evaluates the VCC for overturning for the case of a 4,000-pound object with a horizontal velocity of 126 mph (185 ft/sec), which bounds all other postulated tornado missiles for overturning.

From the principle of conservation of momentum, the impulse of the force from the missile impact on the cask must equal the change in angular momentum of the cask. Also, the impulse force due to the impact of the missile must equal the change in linear momentum of the missile. These relationships may be expressed as follows:

Change in momentum of the missile, during the deformation phase:

$$\int_{t_1}^{t_2} (F)(dt) = m_m(v_2 - v_1)$$

where:

F	=	Impact impulse force on missile
m_m	=	Mass of missile = 4000 lbs/g = 124.3 slugs/12 = 10.36 (lbs sec^2 /in)
t_1	=	Time at missile impact (sec)
t_2	=	Time at conclusion of deformation phase (sec)
v_1	=	Velocity of missile at time t_1 (at impact)
	=	126 mph = 185.0 ft/sec = 2220 in/sec
v_2	=	Velocity of missile at time t_2

The change in angular momentum of the cask, about the bottom outside edge/rim, opposite the side of impact is:

$$\int_{t_1}^{t_2} M_c(dt) = \int_{t_1}^{t_2} (H)(F)(dt) = I_m(\omega_1 - \omega_2)$$

Substituting,

$$\int (F)(dt) = m_m(v_2 - v_1) = \frac{I_m(\omega_1 - \omega_2)}{H}$$

where:

M_c	=	Moment of the impact force on the cask
I_m	=	Concrete cask mass moment of inertia, about point of rotation on the bottom rim
ω_1	=	Angular velocity at time t_1
ω_2	=	Angular velocity at time t_2
m_c	=	Mass of concrete cask = W_c/g = 220,000/32.174
	=	6838 slugs/12 = 570 lbs sec^2 /in
		(Use of a bounding minimum cask weight is conservative because the minimum mass cask requires the least energy to overturn).
I_{mx}	=	Mass moment of inertia, VCC cask about x axis through its center of gravity
	≅	$1/12(m_c)(3r^2 + H^2)$ (Conservatively assuming a solid cylinder.)
	≅	$(1/12)(570)\,[(3)(68.0)^2 + (228.1)^2] = 3.13\times10^6$ lbs-sec^2-in
I_m	=	$I_{mx} + (m_c)(d_{CG})^2 = 3.13\times10^6 + (570)(125.54)^2 = 12.11\times10^6$ lbs-sec^2-in.
d_{CG}	=	The distance between the cask CG and a rotation point on base rim, using the height of tallest cask, and height of the CG of shortest empty cask.
	=	$(64.0^2+108.0^2)^{1/2} = 125.54$ in.

Figure 11.A.2.11-1 illustrates the VCC geometry.

Based on conservation of momentum, the impulse of the impact force on the missile is equated to the impulse of the force on the cask.

$$m_m(v_2 - v_1) = I_m(\omega_1 - \omega_2)/H$$

at time t_1, v_1 = 185 ft/sec and ω_1 = 0 rad/sec

at time t_2, v_2 = 0 ft/sec

During the restitution phase, the final velocity of the missile depends upon the coefficient of restitution of the missile, the geometry of the missile and target, the angle of incidence, and on the amount of energy dissipated in deforming the missile and target. On the basis of tests conducted by EPRI, the final velocity of the missile, v_f, following the impact is assumed to be zero. Assuming conservatively that all of the missile energy is transferred to the cask, and equating the impulse of the impact force on the missile to the impulse of the force on the cask,

$$(10.36)(v_2 - 185 \text{ ft/sec} \times 12 \text{ in/ ft}) = 12.11\times10^6 \text{ lbs-sec}^2\text{-in } (0 - \omega_2)/228.1$$

where:

m_m =	4000 lb = 10.36 lb sec^2 / in	Missile mass
v_1 =	185.0 ft/sec = 2220 in/sec	Missile velocity at impact

Setting $v_2 = 0$ and solving for ω_2

$$\omega_2 = 0.433 \text{ rad/sec (when } v_2 = 0)$$

Back solving for v_2

$$v_2 = 263.5 \times \omega_2 = (263.5)(0.433) = 114.1 \text{ in/sec}$$

where the distance from the point of missile impact to the point of cask rotation is $\sqrt{132.0^2 + 228.1^2}$ = 263.5 in. (See Figure 11.A.2.11-1). The line of missile impact is conservatively assumed normal to this line.

Equating the impulse of the force on the missile during restitution to the impulse of the force on the cask yields:

$$-[m_m(v_f - v_2] = I_m (\omega_f - \omega_2)/H$$
$$-[10.36(0 - 114.1)] = 12.11\times10^6 \text{ lbs-sec}^2\text{-in } (\omega_f - 0.433)/263.5$$
$$\omega_f = 0.459 \text{ rad/sec}$$

where:

v_f = 0

v_2 = 114.1 in/sec
ω_2 = 0.433 rad/sec

Thus, the final energy of the cask following the impact , E_k , is:

$$E_k = (I_m)(\omega_f)^2/(2) = (12.11\times10^6)(0.459)^2/(2) = 1.28\times10^6 \text{ in-lb}_f$$

The change in potential energy, E_p, of the cask due to rotating it until its center of gravity is above the point of rotation (the condition where the cask will begin to tip-over and the height of the center of gravity has increased by the distance, h_{PE}) is:

$$E_p = (W_{cask})(h_{PE})$$
$$E_p = 220{,}000 \text{ lbs} \times 17.54 \text{ in}$$
$$E_p = 3.86\times10^6 \text{ in-lb}_f$$

The massive high kinetic energy tornado generated missile imparts less kinetic energy than the change in potential energy of the cask at the tip-over point. Therefore, cask overturning from missile impact is not postulated to occur. The Factor of Safety, FS, against overturning is:

$$FS = \frac{0.67\times(3.86\times10^6)}{1.28\times10^6} = 2.0$$

Combined Tornado Wind and Missile Loading (High Energy Missile)

The cask rotation due to the heavy missile impact is calculated as (See Figure 11.A.2.11-1 for dimensions):

$$h_{KE} = E_k / W_c = 1.28\times10^6 \text{ in-lb}_f / 220{,}000 \text{ lbs} = 5.87 \text{ in}$$

then

$$\cos\beta = (h_{CG} + h_{KE}) / d_{CG}$$
$$\cos\beta = (108.0 + 5.82) / 125.54 = 0.9066$$
$$\beta = 24.96 \text{ deg}$$
$$\cos\alpha = h_{CG} / d_{CG} = 108.0 / 125.54 = 0.8603$$
$$\alpha = 30.65 \text{ deg}$$

$e = d_{CG} \sin \beta$

$e = 125.54 \sin 24.96 = 52.98$ in

Therefore, cask rotation after impact = $\alpha - \beta = 30.65 - 24.96 = 5.69$ deg

The available gravity restoration moment after missile impact:

$= (W_c)(e)$

$= 220{,}000 \text{ lbs} \times 52.98.\ \text{in}/12$

$= 9.71\times10^5$ ft-lbs >> Tornado Wind Moment $= 4.64\times10^5$ ft-lbs

Therefore, the combined effects of tornado wind loading and the high energy missile impact loading will not overturn the cask. Considering that the overturning moment should not exceed two-thirds of the restoring stability moment, the Factor of Safety, FS, is:

$$FS = \frac{0.67\times\left(9.71\times10^5\right)}{4.64\times10^5} = 1.40$$

Local Shear Strength Capacity of Concrete Shell (High Energy Missile)

This section evaluates the shear strength of the concrete at the top edge of the concrete shell due to a high-energy missile impact. The evaluation is based on ACI 349-85 [34], and UMS® FSAR Chapter 11, Section 11.2.11.1, for concrete punching shear strength. The missile is assumed to impact in a manner that produces the maximum damage.

The force developed by the massive high kinetic energy missile weighing 4000 lbs, having a frontal area of 20 square feet, with an aspect ratio of 2 horizontal to 1 vertical, traveling at 185 ft/sec is evaluated using the methodology presented in Topical Report, BC-TOP-9A [35].

$F = 0.625(v)(W_M)$

$F = 0.625(185 \text{ ft/sec})(4{,}000 \text{ lbs}) = 463$ kips

$F_u = LF \times F = 1.0 \times 462.5 = 463$ kips

where:

$LF = 1.0$ Load factor for extreme environmental loads [34].

The shear strength capability of the VCAM is evaluated based on ACI 349-85 [34]. The factored shear force (V_u) due to impact is compared to the nominal concrete shear strength (V_n), reduced by a strength reduction factor (Φ).

$$V_u \leq \Phi V_n \quad [34]$$

where:

Vu = factored shear force at the section considered
$V_n = V_c + V_s$ = nominal shear strength
V_c = nominal shear strength provided by concrete
V_s = nominal shear strength provided by shear reinforcement
Φ = strength reduction factor for shear

The evaluation conservatively ignores the shear strength contribution provided by the concrete reinforcement, therefore, $V_s = 0$, therefore $V_n = V_c + V_s = V_c + 0$, or

$$V_n = V_c$$

The evaluation conservatively ignores the steel inner shell. The missiles are assumed to impact flush with the top of the concrete shell.

The nominal concrete punching shear strength capacity V_c is determined per ACI 349-85 [34]:

$$V_c = (2+4/\beta_c)\,(f_c')^{1/2} b_o\, d, \qquad [34]$$

where $\beta_c = 2/1 = 2$, ratio of long side to short side (of missile contact area).

For the case of $\beta_c = 2$,

$V_c = 4\,(f_c')^{1/2} b_o\, d$
d = distance from extreme compression fiber to centroid of tension reinforcement in opposite half of member (for circular sections) [34]
d = 102.5 in.
$(f_c')^{1/2} = (4000)^{1/2}$ psi, where $f_c' = 4000$ psi, compressive strength, concrete, 70-200°F
b_o = perimeter of punching shear area at d/2 from missile contact area [34]
b_o = 110.0 in., conservatively ignoring the sides of the shear perimeter, due to their close proximity to the outside diameter of the concrete cylindrical wall.
$\Phi V_n = \Phi(V_c + V_s)$, [34];

For the case of $V_s = 0$, assuming no steel shear reinforcement, the allowable shear strength ΦV_n is

$$\Phi V_n = \Phi V_c = \Phi\, 4\, (f_c')^{1/2} b_o\, d$$
$$= (0.85)(4)\,(4000)^{1/2}(110.0)(102.5)$$
$$\Phi V_n = 2425 \text{ kip}$$

Thus, the impact force applied by the 4000 lb object travelling at 185 ft/ second is $V_u = 463$ kips. The factored shear strength punching capacity is $\Phi V_n = 2{,}425$ kips.

The factor of safety for the 4,000-lb object missile impact case is:

$$FS = \frac{\phi V_n}{V_u} = \frac{2425}{463} = 5.2$$

Thus, the concrete shell alone, based on the concrete conical punching strength and discounting the steel reinforcement and shell, has sufficient capacity to react to the high-energy missile impact force.

The effects of tornado winds and missiles are considered both separately and combined in accordance with NUREG-0800 [30], Section 3.3.2 II.3.d. For the case of tornado wind plus missile loading, the stability of the cask is assessed and found to be acceptable. Equating the kinetic energy of the cask following missile impact to the potential energy yields a maximum postulated rotation of the cask, as a result of the impact, of 5.69 degrees. Applying the total tornado wind load to the cask in this configuration results in an available restoring moment considerably greater than the tornado wind overturning moment. Therefore, overturning of the cask under the combined effects of tornado winds, plus tornado-generated missiles, does not occur.

Tornado Effects on the Canister

The postulated tornado wind loading and missile impacts are not capable of overturning the cask, or penetrating the boundary established by the concrete cask. Consequently, there is no effect on the canister. Stresses resulting from the tornado-induced decreased external pressure are bounded by the stresses due to the accident internal pressure discussed in Section 11.A.2.1

Figure 11.A.2.11-1 Tornado Missile Loading (Concrete Cask)

Figure Withheld Under 10 CFR 2.390

11.A.2.12 Tip-Over of Vertical Concrete Cask

Tip-over of the Vertical Concrete Cask (VCC) is a nonmechanistic, hypothetical accident condition that presents a bounding case for evaluation. There are no design basis accidents that result in the tip-over of the VCC.

Functionally, the VCC does not suffer significant adverse consequences due to this event. The VCC, Canister, and basket maintain design basis shielding, geometry control of contents, and contents confinement performance requirements.

Results of the evaluation show that supplemental shielding will be necessary, following the tip-over and until the VCC can be uprighted, because the bottom ends of the VCC and the Canister have significantly less shielding than the sides and tops of these components.

The cause, detection and corrective action of this event for the UNITAD Storage System are essentially the same as those discussions provided for the NAC-UMS® Storage System in FSAR Sections 11.2.12.1, 11.2.12.2 and 11.2.12.5. Because the tip-over is a nonmechanistic, hypothetical accident condition, tip-over dose rates were not computed for the UNITAD Storage System.

11.A.2.12.1 Analysis of the Cask Tip-over for the UNITAD Storage System

For a tip-over event to occur, the center of gravity of the VCC (concrete cask) and loaded Canister must be displaced beyond its outer radius, i.e., the point of rotation. When the center of gravity passes beyond the point of rotation, the potential energy of the cask and Canister is converted to kinetic energy as the cask and Canister rotate toward a horizontal orientation on the ISFSI pad. The subsequent motion of the cask is governed by the structural characteristics of the cask, the ISFSI pad and the underlying soil.

The objective of the evaluation of the response of the concrete cask in the tip-over event is to determine the maximum acceleration to be used in the structural evaluation of the loaded Canister and basket (Section 11.A.2.12.2). The methodology to determine the concrete cask response follows the methodology contained in FSAR Section 11.2.12.3.1 which is based on NUREG/CR-6608, "Summary and Evaluation of Low-Velocity Impact Tests of Solid Steel Billet Onto Concrete Pads" [38]. The LS-DYNA program is used in the evaluation. The validation of the analysis

methodology is shown in FSAR Section 11.2.12.3.3. The finite element model includes a half-section of the concrete cask, the concrete ISFSI pad and soil subgrade, as shown in the following sketch.

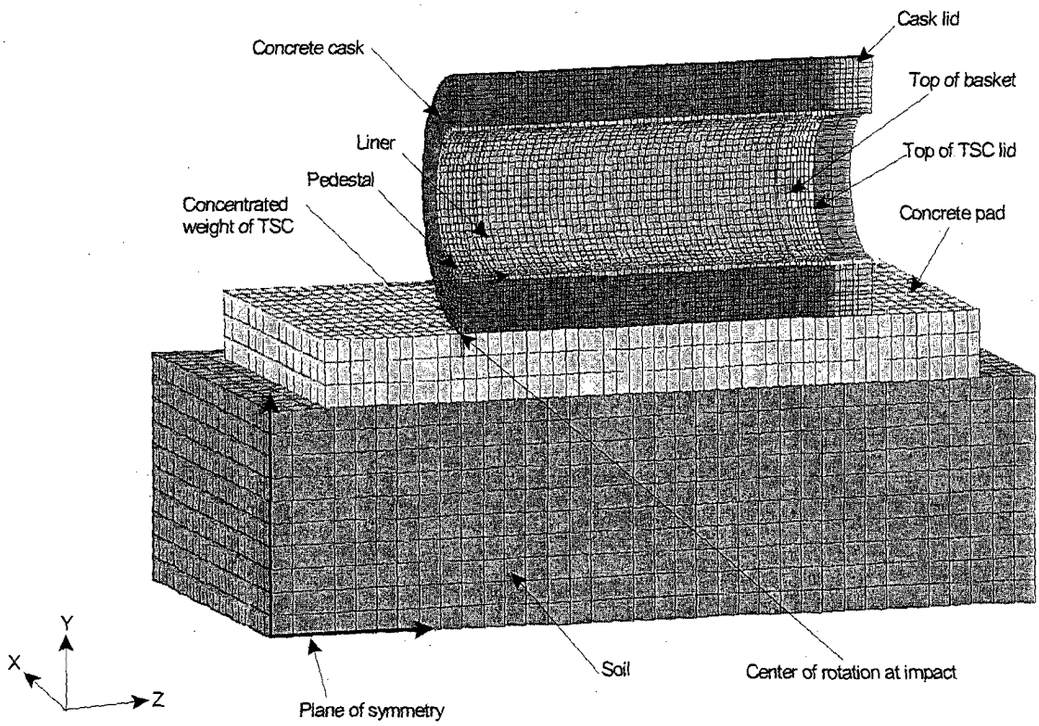

The parameters of the ISFSI pad and foundation are:

Concrete thickness	36 inches maximum
Pad subsoil thickness	10 feet minimum
Specified concrete compressive strength	≤ 5,000 psi per ACI 318
Concrete dry density (ρ)	145 lbs/ft^3
Soil in place density (ρ)	$120 \leq \rho \leq 140$ lbs/ft^3
Soil Modulus of Elasticity	≤ 30,000 psi

The soil properties are the main source for mitigating the accelerations experienced by the Canister and basket in the tip-over. In particular, the modulus of elasticity is the most important of the soil characteristics. Lower soil modulus results in lower accelerations experienced by the Canister and basket. The soil modulus shown above for the UNITAD Storage System is the same value as used in the evaluation of the NAC-UMS® BWR system. The only boundary condition applied to the tip-over analysis using LS-DYNA is the initial angular velocity, which is obtained by conservation of

energy based on the change in height of the system CG from the tip over CG over center position to the CG of the system in the horizontal position. The acceleration time histories for the top of the Canister and the top of the support disk are shown in the following sketch. The maximum acceleration for the top of the Canister and the top support disk are 35g's and 32g's, respectively.

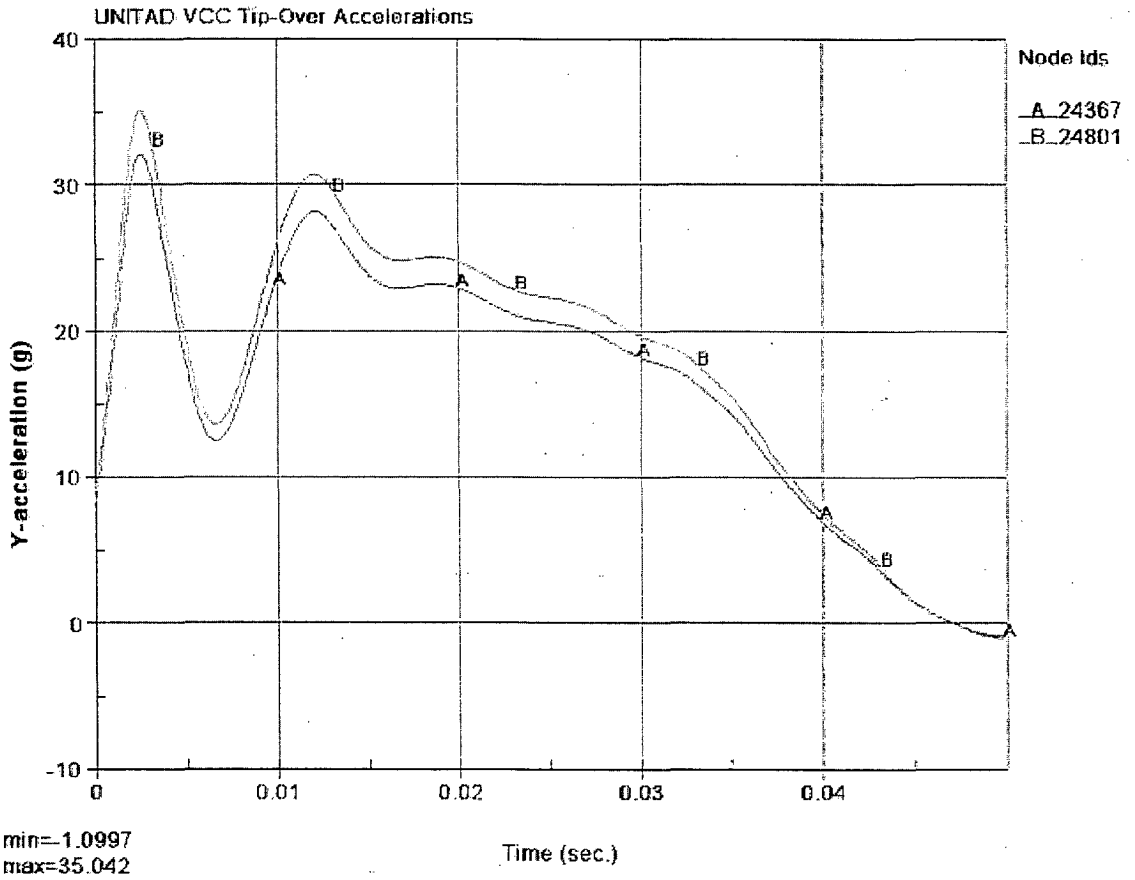

11.A.2.12.2 Analysis of the Canister and Basket for the Cask Tip-over Event for the UNITAD Storage System

Structural evaluations are performed for the transportable storage canister and fuel basket support disks for tip-over accident conditions for both PWR fuel configurations. ANSYS finite element models are used to evaluate this side impact loading condition.

Comparison of maximum stress results to the allowable stress intensities shows that the canister and support disks are structurally adequate for the concrete cask tip-over condition and satisfies the stress criteria in accordance with the ASME Code, Section III, Division I, Subsection NB and NG, respectively.

The structural response of the PWR canister and fuel baskets to the tip-over condition is evaluated using ANSYS three-dimensional finite element models of the canister and a single disk model for the basket support disk. By decoupling the Canister and basket support disk models, and in using a pressure load to represent the content weight in the canister model, only single Canister orientation is required. The support disk structural analyses are performed for various fuel basket drop orientations in order to ensure that the maximum primary membrane (P_m) and primary membrane plus primary bending ($P_m + P_b$) stresses are evaluated.

Canister Model Description

The finite element model used to evaluate the loaded Canister for the tip-over event is shown in Figure 11.A.2.12-1. The Canister shell and lid are constructed of SOLID45 elements, which have three degrees-of-freedom (UX, UY, and UZ) per node. The interaction of the Canister shell with the inner surface of the concrete cask is modeled using CONTAC52 elements with an initial gap size equal to the difference in the nominal radial dimensions of the outer surface of the Canister and the inner surface of the concrete cask (which is 0.75 inch radially). A gap stiffness of 1×10^6 lbs/inch is assigned to all CONTAC52 elements. The stresses in the Canister weld region are expected to the exceed the yield strength of the material. ASME Code, Section III, Subsection NB, permits inelastic properties to be used in accident condition in accordance with Appendix F. Plasticity of the SA-240, Type 304 stainless steel is taken into account using the bilinear kinematic hardening model. Local material properties used in the analysis are determined based on temperature of the model.

Since the cask is rotating about its base in the tip-over event, the accelerations applied to the Canister should vary linearly from the point of rotation to a maximum value at the top of the Canister. The inertial loading of the fuel and basket to the Canister inner shell surface should also vary in a linear manner. However, this is conservatively modeled as a uniform acceleration applied to the contents. The pressure is uniformly distributed along the cavity length over a section equal to the length of the basket and is applied in the circumferential direction as a cosine distribution. The maximum pressure occurs at the impact centerline; the pressure decreases to zero at locations that are 45° either side of the impact centerline. The pressure applied to the Canister shell corresponds to a linear acceleration of 50g's. The acceleration of 50g's was also applied to the elements of the Canister model.

Analysis Results for the Canister

The sectional stresses at 15 axial locations of the Canister are obtained for numerous angular divisions of the model (a total of 35 angular locations for the half-symmetry model). The locations for the stress sections are shown in Figure 11.A.1.3-2.

The stress evaluation for the Canister is performed in accordance with the ASME Code, Section III, Subsection NB, by comparing the linearized sectional stresses against the allowable stresses. Bounding temperatures that envelop the maximum temperatures experienced by canister components during normal conditions are used to determine allowable stress values. Temperatures used at each stress section are given in Figure 11.A.1.3-2. In ASME Code, Section III, Appendix F, the primary membrane stresses are limited to 0.7Su, while the maximum stress intensity at the outer surface, which is obtained as the linearized component of the cross-sectional stress intensity is limited to 0.9Su. The primary membrane and primary membrane plus bending stresses for the Canister are contained in Tables 11.A.2.12.-1 and 11.A.2.12-2. In accordance with ISG-15, Revision 0 [60], a 0.8 weld reduction factor is applied to the allowable stresses for the closure lid/Canister shell weld. Use of the 0.8 factor is valid because the ultimate tensile strength of the weld material exceeds the base metal strength.

The stress evaluation results for the tip-over accident condition show that the minimum margin of safety in the Canister is +0.02 for P_m stresses (Section 13). For P_m+P_b stresses, the margin of safety at is +0.12 (Section 11).

Support Disk Model Description

A finite element model is used to evaluate the support disk for the tip-over event and is the same as shown in Figure 3.A.5-3, except that the model is constructed using PLANE42 elements, which have two degrees-of-freedom (UX, UY) per node. The interaction of the Canister shell with the inner surface of the concrete cask is modeled using CONTAC52 elements with an initial gap size of 0.875 inch, which is the sum of the radial gaps between the basket disk and Canister (.125 inch) and the Canister and the inner liner standoff (0.75 inch). A gap stiffness of 1×10^6 lbs/inch is assigned to all CONTAC52 elements. The stresses in the Canister weld region are expected to exceed the yield strength of the material. ASME Code, Section III, Subsection NG, permits inelastic properties to be used in accident condition in accordance with Appendix F. The yield strength (Sy) and ultimate strength (Su) for the model are evaluated at 700°F, which bounds the maximum temperatures for the normal, off normal and accident conditions.

The model is comprised of a single disk and the peak accelerations occur for the top support in the basket. An acceleration of 90g's is applied to the contents and the mass of the support disk. Five different directions of the applied acceleration with respect to the disk orientation are considered and are shown in Figure 11.A.1.3-2. The pressure applied to each slot in the disk accounts for the fuel and borated steel plate and aluminum disks (even though its weight is not significant as compared to the fuel and borated stainless weights). The shorter canister configuration is used in conjunction with the maximum fuel weight to identify a bounding load on the support disk for either Canister configuration. Using a single disk with the maximum radial gap is conservative since it neglects any support provided by the Canister shell at the end of the canister where the shell is rigidly attached to the Canister lid.

As shown in Section 11.A.2.12.1, the maximum acceleration of the concrete cask steel liner at the location of the top of the Canister during the tip-over event is determined to be 35g. To determine the effect of the rapid application of the inertia loading for the support disk, a dynamic load factor (DLF) is computed using the mode shapes of a loaded support disk. The mode shapes corresponding to the in-plane motions of the disk are extracted using ANSYS. However, only the dominant modes with respect to modal mass participation factors are considered in computing the DLF. The first dominant in-plane mode frequency is at 94.5 Hz and the mode shape is shown in Figure 11.A.2.12-2. The displacement depicted in these figures is highly exaggerated in order to illustrate the modal shape.

Using the acceleration time history of the concrete cask steel liner at the top support disk location developed from Section 11.A.2.12.1, the DLF is computed to be 1.15. Applying the DLF to the 35g results in a peak acceleration of 40.3g for the top support disk. Using an acceleration of 85g's for the support disk tip-over evaluation is conservative.

Analysis Results for the Support Disk

The stress evaluation for the support disk is performed according to ASME Code, Section III, Subsection NG. For accident conditions, Appendix F can be used for models using inelastic properties. The allowable stresses for each section are based on a temperature of 700°F for the entire disk. This temperature is bounding for the normal and off-normal conditions of storage. In Appendix F, the primary membrane stresses are limited to 0.7Su, while the maximum stress intensity at the outer surface is limited to 0.9Su.

Both elastic and plastic stress results are calculated using the ANSYS post-processor at the disk sections shown in Figure 3.A.5-4. Based on differences in the equivalent stress results from the

finite element analysis [i.e., $(\sigma + 3\tau)^{1/2}$] and the ASME Code, Section III stress intensity criterion [i.e., $(\sigma + 4\tau)^{1/2}$], the maximum nodal plastic equivalent stresses are conservatively increased by a factor of $(4/3)^{1/2}$. If yielding has not occurred along a section, the averaged membrane and membrane plus bending stress intensities are reported directly.

The stress evaluation results for the support disk for the tip-over condition are summarized in Table 11.A.2.12-3 for the five drop orientations. As shown in the table, the 0° orientation gives the smallest margin of safety for both the P_m and $P_m + P_b$ stress intensities. Table 11.A.2.12-4 lists the 15 lowest margins of safety for this orientation. The highest P_m stress occurs at Section 101, with a margin of safety of +0.07. The highest $P_m + P_b$ stress occurs at Section 101, with a margin of safety of +0.15. (See Figure 3.A.5-4 for section locations.) The plastic strains identified in the conservative dynamic analysis using (100/34), or 2.8 times the acceleration of the actual tip-over acceleration accident, are localized in the basket support disk. This confirms that for the tip-over accident, the local distortion of the basket does not result in a permanent set of the basket. Since buckling does not occur at 100g's acceleration, the safety factor for buckling is 2.8.

Support Disk Buckling Evaluation

For the tip-over accident, the support disks experience in-plane loads. The in-plane loads apply compressive forces and in-plane bending moments on the support disk. No buckling is indicated in the elastic-plastic finite element analysis used to evaluate the basket during the tip-over event performed at an acceleration level of 100g's.

Figure 11.A.2.12-1 Canister Finite Element Model for the Tip-Over Condition

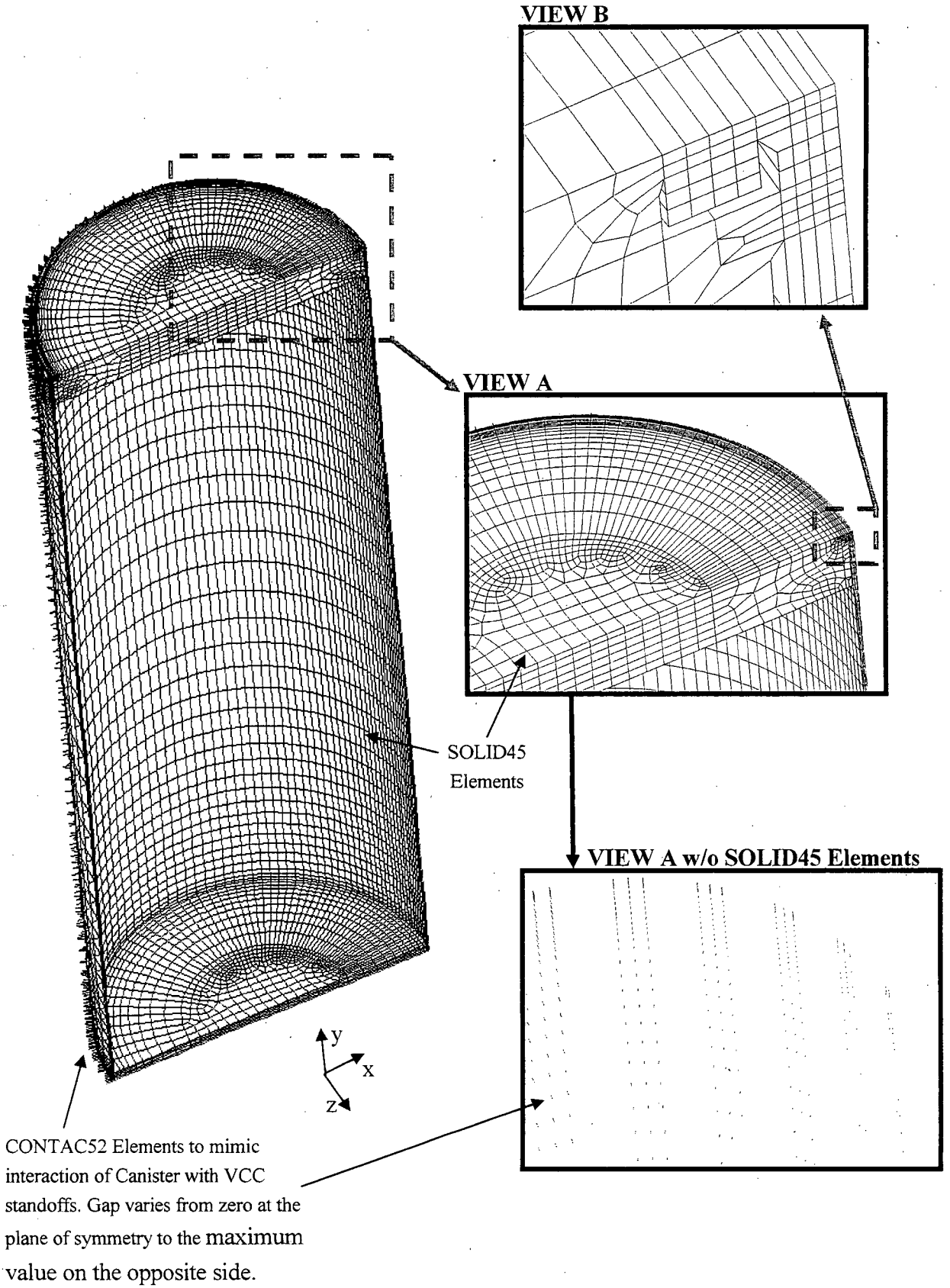

Figure 11.A.2.12-2 Dominant Mode Shape for the Support Disk

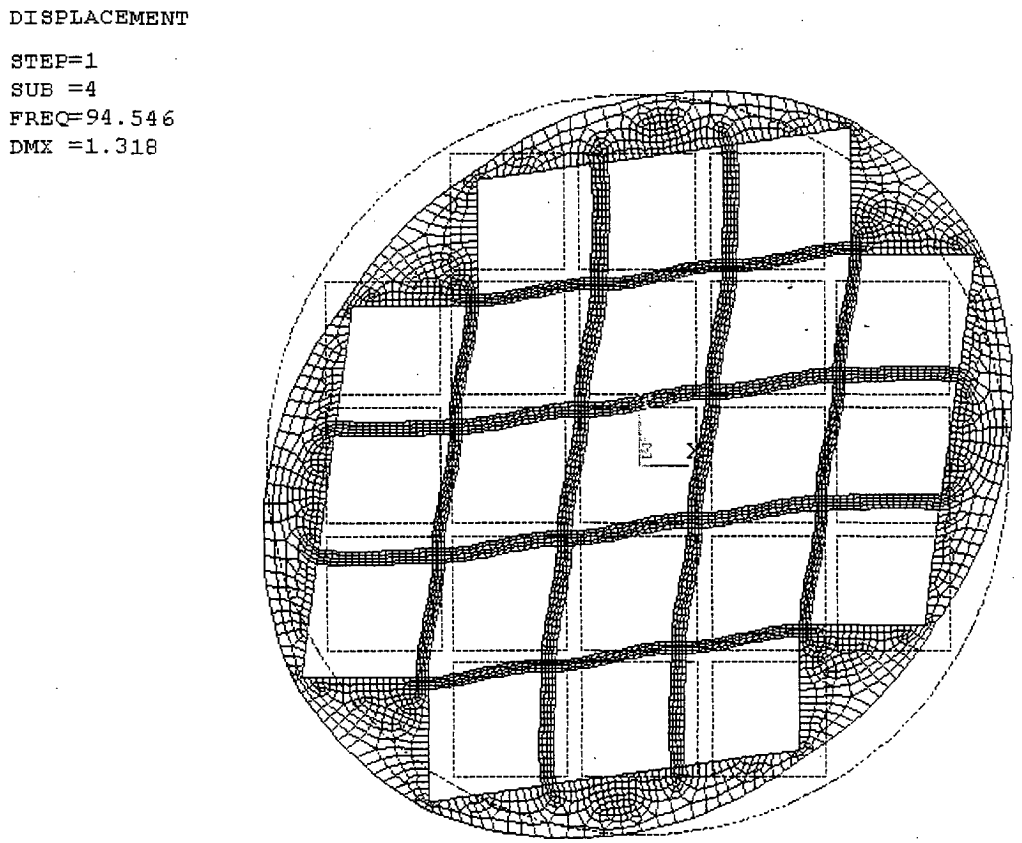

Tables 11.A.2.12.-1 Canister Primary Membrane (P_m) Stresses for Tip-Over Conditions (ksi)

Section[1]	Component Stresses (ksi)						S_{int}	S_{allow}	MS
	S_x	S_y	S_z	S_{xy}	S_{yz}	S_{xz}			
1	-32.79	-17.15	-4.79	1.95	0.94	-3.32	29.07	49.70	0.71
2	-22.54	-14.25	-2.77	-1.44	0.31	-5.23	22.59	49.70	1.20
3	0.02	0.77	-0.34	0.01	-8.63	-0.01	17.30	49.70	1.87
4	0.39	2.03	10.46	3.87	-0.04	-1.19	13.45	45.08	2.35
5	-0.20	1.19	11.47	3.96	0.00	-0.45	15.02	45.08	2.00
6	-0.09	1.06	11.11	3.98	0.02	0.01	14.65	45.08	2.08
7	0.12	1.03	10.54	3.98	0.03	0.29	13.98	45.08	2.23
8	0.86	1.77	8.04	3.92	0.07	1.04	10.96	45.08	3.11
9	0.06	-10.57	3.12	2.05	0.15	0.09	14.09	48.83	2.47
10	-35.49	-17.82	-9.12	3.52	-3.46	-6.73	31.48	48.83	0.55
11	-43.65	-22.04	-6.08	0.10	-0.58	-3.55	38.25	39.06[2]	0.02
12	-31.54	-10.94	-1.21	2.44	0.13	-0.43	30.62	48.83	0.59
13	-45.48	-18.84	-11.58	2.65	0.12	1.19	34.24	48.83	0.43
14	-0.93	0.26	0.00	0.02	0.00	-0.08	1.19	48.83	40.05
15	-2.54	0.74	0.00	0.10	0.00	0.00	3.29	48.83	13.86

1 See Figure 11.A.1.3-2 for definition of locations of stress sections and the components shown are in the cylindrical coordinate system.

2 A stress reduction factor of 0.8 is applied to the allowable stress.

Table 11.A.2.12-2 Canister Primary Membrane + Primary Bending ($P_m + P_b$) Stresses for Tip-Over Conditions (ksi)

Section[1]	Component Stresses (ksi)						S_{int}	S_{allow}	MS
	S_x	S_y	S_z	S_{xy}	S_{yz}	S_{xz}			
1	-30.12	-13.20	1.00	3.06	1.87	-1.02	31.34	63.90	1.04
2	-3.45	-17.59	13.51	0.83	7.71	1.06	29.58	63.90	1.16
3	-0.50	40.19	17.82	-1.74	1.91	-0.45	30.37	63.90	1.10
4	-1.67	46.94	22.93	-0.25	0.02	-0.02	38.75	57.96	0.50
5	-1.29	47.66	23.45	-0.32	0.01	-0.01	39.01	57.96	0.49
6	-1.28	47.75	23.48	-0.35	0.00	0.00	39.06	57.96	0.48
7	-1.25	47.71	23.46	-0.36	-0.01	0.00	39.02	57.96	0.49
8	-1.54	47.19	23.02	-0.30	-0.02	0.02	38.83	57.96	0.49
9	-0.91	-44.55	-21.65	-0.46	2.80	0.52	29.30	62.77	1.14
10	-35.93	-18.16	-11.69	4.24	-2.35	-12.10	44.53	62.77	0.41
11	-38.71	-17.43	-4.27	-0.07	-0.26	-11.18	44.71	50.22[2]	0.12
12	-37.39	-19.98	-7.15	5.58	-0.08	0.08	35.00	62.77	0.79
13	-72.59	-48.38	-33.10	1.84	-0.84	1.25	44.13	62.77	0.42
14	-3.29	1.12	0.00	0.04	0.00	-0.08	4.41	62.77	13.23
15	-2.91	1.62	0.00	0.12	0.00	0.00	4.54	62.77	12.82

1 See Figure 11.A.1.3-2 for definition of locations of stress sections and the components shown are in the cylindrical coordinate system.

2 A stress reduction factor of 0.8 is applied to the allowable stress.

Table 11.A.2.12-3 Summary of Maximum Stresses for Support Disk for Tip-Over Conditions, (ksi)

Drop Orientation	P_m			$P_m + P_b$		
	Stress Intensity (ksi)	Allowable Stress (ksi)	Margin of Safety	Stress Intensity (ksi)	Allowable Stress (ksi)	Margin of Safety
0.0	41.2	44.2	0.07	49.6	56.9	0.15
10.4	40.7	44.2	0.09	49.1	56.9	0.21
17.1	40.7	44.2	0.09	49.2	56.9	0.16
30.8	40.9	44.2	0.08	49.6	56.9	0.15
45	38.4	44.2	0.15	46.2	56.9	0.23

Note: Allowable stresses based on a temperature of 700°F.

Table 11.A.2.12-4 Support Disk Primary Membrane (P_m) Stresses for the Tip-Over Condition, (ksi), 0° Drop Orientation

Section	P_m (ksi)			Section	$P_m + P_b$ (ksi)		
	S_{int}	S_{allow}	MS		S_{int}	S_{allow}	MS
101	41.2	44.2	0.07	97	49.6	56.9	0.15
97	41.2	44.2	0.07	101	49.6	56.9	0.15
7	30.1	44.2	0.47	16	30.1	56.9	0.89
82	30.1	44.2	0.47	78	30.1	56.9	0.89
56	29.8	44.2	0.49	7	30.0	56.9	0.90
29	29.8	44.2	0.49	82	30.0	56.9	0.90
58	27.4	44.2	0.62	56	29.9	56.9	0.90
31	27.4	44.2	0.62	29	29.9	56.9	0.90
8	25.6	44.2	0.73	51	27.3	56.9	1.08
83	25.6	44.2	0.73	57	27.3	56.9	1.09

Note: See Figure 3.A.5-4 for disk section locations

11.A.2.13 Full Blockage of Vertical Concrete Cask Air Inlets and Outlets

This section evaluates the Vertical Concrete Cask for the steady-state effects of full blockage of the air inlets and outlets at the normal ambient temperature (76°F). It estimates the duration of the event that results in the fuel cladding, the fuel basket and the concrete reaching their design basis limiting temperatures. (See FSAR Table 4.1-3 for the allowable temperatures for short-term conditions.)

The evaluation demonstrates that there are no adverse consequences due to this accident, provided that the full blockage of the concrete cask inlets and outlets is cleared within 24 hours.

The cause, detection and corrective action of this event for the UNITAD Storage System are essentially the same as those discussions provided for the NAC-UMS® Storage System in FSAR Sections 11.2.13.1, 11.2.13.2 and 11.2.13.4. The radiological impact of this event differs between the UMS and UNITAD system as the air inlet dose rates while clearing the inlets and outlets are higher for UNITAD. The surface dose rates at the air inlets and outlets for the UNITAD Storage System are 389 mrem/hr and 46.6 mrem/hr, respectively. If a worker requires 15 minutes to clear each inlet or outlet, the estimated extremity dose is 436 mrem for the 8 openings. The dose from the cask body while cleaning debris is estimated at 106 mrem, assuming two hours are spent near the cask exterior surface.

11.A.2.13.1 Analysis of the Full Blockage Event for the UNITAD Storage System

The accident temperature conditions are evaluated using the Concrete Cask and Canister thermal models described in Section 4.A.4.1.1. The analysis assumes initial normal storage conditions, with the sudden loss of convective cooling of the Canister. Heat is then rejected from the Canister to the Vertical Concrete Cask (Concrete Cask) liner by radiation and conduction. The loss of convective cooling results in the fairly rapid and sustained heat-up of the Canister and the Concrete Cask. The finite element model in Section 4.A.4.1.1 is used to perform the transient thermal analysis with all vents blocked. Other than turning the inlet and outlet into 'WALL" conditions in the model, all other boundary conditions are the same as described in Section 4.A.4.1.1. The analysis results show that it takes 36 hours for the maximum fuel temperature to reach 750°F, which is less than the allowable for the fuel. Since the maximum temperature of the heat transfer disk is more than 40°F less than the maximum fuel temperature (Table 4.A.1-1), the maximum temperature of the heat transfer disk at 36 hours after the accident occurring is definitely less than 750°F, which is the allowable of the heat transfer disk for the accident condition. The maximum concrete temperature at 36 hours after the accident occurring is 323°F, which is less than the allowable of 350°F for the accident condition. The time history of the maximum fuel temperature for the all vents blocked condition is plotted in Figure 11.A.2.13-1.

Figure 11.A.2.13-1 Fuel Clad Temperature (°F) History – All Vents Blocked

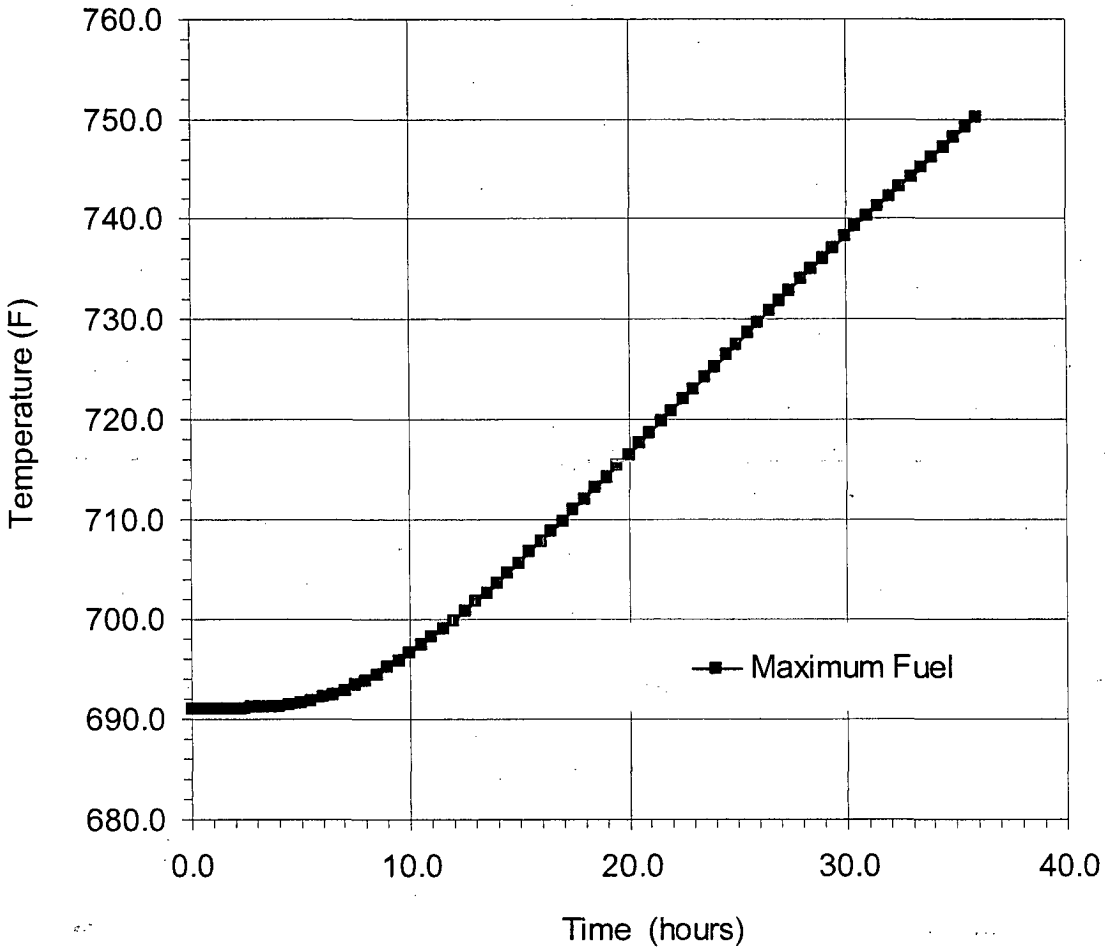

11.A.2.14 Canister Closure Weld Evaluation – Accident Conditions

The closure weld for the Canister is a groove weld with a thickness of 0.5 inch. The evaluation of this weld, in accordance with NRC guidance, (ISG-15) is to incorporate a 0.8 stress reduction factor. Applying a factor of 0.8 to the weld stress allowable incorporates the stress reduction factor.

The stresses for the Canister are evaluated using sectional stresses as permitted by Subsection NB of the ASME Code. Canister stresses resulting from the Concrete Cask tip-over accident (Section 11.A.2.12.4) are used for evaluation. The location of the section for the Canister weld evaluation is shown in Figure 11.A.1.3-2 and corresponds to Section 11. The governing P_m and $P_m + P_b$ stress intensities for Section 11 and the associated allowables are listed in Table 11.A.2.12-1 and Table 11.A.2.12-2, respectively. The factored allowables, incorporating a 0.8 stress reduction factor, and the resulting controlling margins of safety are:

Stress Category	Analysis Stress Intensity (ksi)	0.8 × Allowable Stress (ksi)	Margin of Safety
P_m	38.25	39.06	0.02
P_m+P_b	44.71	50.22	0.12

This confirms that the canister closure weld is acceptable for accident conditions.

Critical Flaw Size for the Canister Closure Weld

The closure weld for the Canister is comprised of multiple weld beads using a compatible weld material for Type 304 stainless steel. An allowable (critical) flaw evaluation has been performed to determine the critical flaw size in the weld region. The result of the flaw evaluation is used to define the minimum flaw size, which must be identifiable in the nondestructive examination of the weld. Due to the inherent toughness associated with Type 304 stainless steel, a limit load analysis is used in conjunction with a J-integral/tearing modulus approach. The safety margins used in this evaluation correspond to the stress limits contained in Section XI of the ASME Code.

One of the stress components used in the evaluation for the critical flaw size is the radial stress component in the weld region of the closure lid. For an accident (Level D) event, in accordance with ASME Code Section XI, a safety factor of $\sqrt{2}$ is required. For the purpose of identifying the stress for the flaw evaluation, the weld region corresponding to Section 11 in Figure 11.A.1.3-2 is considered.

The maximum tensile radial stress at Section 11 is 1.3 ksi, based on the analysis results of the 24-inch VCC drop accident (Section 11.A.2.4). To perform the flaw evaluation, a 10 ksi stress is conservatively used, resulting in a significantly larger safety factor than the required safety factor of $\sqrt{2}$. Using 10 ksi as the basis for the evaluation, the minimum detectable flaw size is 0.375 inch for a flaw that extends 360 degrees around the circumference of the Canister. Stress components for the circumferential and axial directions are also reported in the Concrete Cask tip-over analysis, which would be associated with flaws oriented in the radial or horizontal directions, respectively. The maximum stress for these components is 2.4 ksi, which is also enveloped by the value of 10 ksi used in the critical flaw evaluation for stresses in the radial direction. The 360-degree flaw employed for the circumferential direction is considered to be bounding with respect to any partial flaw in the weld, which could occur in the radial and horizontal directions. Therefore, using a minimum detectable flaw size of 0.375 inch is acceptable, since it is less than the 0.44-inch critical flaw size.

11.A.2.15 Fuel Rod Structural Evaluation

This section presents a structural evaluation of PWR fuel rods with a maximum burnup of 45,000 MWd/MTU for normal and accident conditions of storage.

During normal and off-normal conditions for the fuel in the Canister, the loads applied to the fuel assembly are minimal and do not require further evaluation. The only significant axial loadings the fuel assembly will experience are the 24-inch drop of the VCC. The bounding lateral loading on the fuel assembly occurs during the tip-over accident condition.

11.A.2.15.1 PWR Fuel Rod Evaluation

End Drop Evaluation – 24-inch Drop of the VCC

This section presents the buckling evaluation for the UNITAD System PWR fuel rods (peak rod average burnup of 45 GWd/MTU). In order to account for the cladding oxide layer, a conservative 120-micron thick layer is assumed to be removed from the reference clad in the rod structural evaluation. The 120-micron clad removal is conservative, as this value represents double the maximum oxide layer thickness listed for end-of-life PWR fuel rods in PNL-4835 [62]. Applying a time-dependent oxide layer growth approximation to the PNL-4835-reported maximum thickness of 60 microns, yields a maximum end-of-life oxide layer in the range of 90 microns. Actual layers are expected to be significantly lower. Therefore, a significant margin exists to the evaluated oxide layer levels.

These analyses show that the maximum stresses in the PWR fuel remain below the yield strength in the design basis accident events and confirm that the fuel rods will return to their original configuration when subjected to the end drop event.

In the end drop orientation, the fuel rods are laterally restrained by the grids and come into contact with the fuel assembly base. The only vertical constraint for the fuel rod is the base of the assembly. As opposed to employing a straight fuel assembly, the fuel assembly is considered to be bowed. The evaluation of the PWR fuel rods is based on the following representative samples.

Fuel Assembly	Cladding Diameter (in)	Cladding Thickness (in)	Fuel Rod Pitch (in)	Gap Between Fuel Assembly and Fuel Tube Wall (in)
WE17×17	0.36	0.023	0.496	0.704
WE15×15	0.422	0.024	0.563	0.696
WE14×14	0.40	0.024	0.556	1.372
CE16×16	0.382	0.025	0.506	1.028
CE14×14	0.44	0.028	0.58	1.02
BW17×17	0.379	0.024	0.502	0.589
BW15×15	0.43	0.027	0.568	0.618

Review of the design basis fuel inventory indicates that the largest gap between the envelope of the fuel rods of a straight fuel assembly and the basket fuel tube inner wall could be 1.372 inches, corresponding to a 14×14 rod array having a minimum rod pitch of 0.556 inch and a minimum rod diameter of 0.40 inch inside a 9-inch maximum basket fuel cell. In this evaluation, an assembly with an initial bow of 0.55 inch is permitted to displace an additional 0.822 inch to the full gap displacement of 1.372 inches. A PWR 17×17 fuel assembly with a bow of 0.55 inch (less than the gap of 0.704 inch as shown previously) can still be fit into a fuel tube. To implement a bow of 0.55 inch into the fuel assembly, the half-symmetry ANSYS model corresponding to a row of fuel rods is used. The ANSYS model for the 14×14 assembly is shown in Figure 11.A.2.15-1. The clad is modeled with shell elements. Each grid is modeled using brick elements to maintain the spacing between the fuel rods at the grid. The fuel tube is modeled using brick elements to restrict the lateral motion of the fuel assembly. Each of the fuel rods in the ANSYS model is simply supported at each end. A static force is applied to the ANSYS model at the grid nearest the axial center to develop a 0.55-inch lateral displacement. The purpose of the ANSYS model and solution is to provide the coordinates of the fuel clad for the LS-DYNA model. This is accomplished by obtaining a static solution with the ANSYS model and then using the option to update the coordinates of the nodes based on the displacements from the solution. The stiffness of the fuel pellets is ignored in this analysis, and the mass of the fuel and cladding is lumped into the clad elements.

Two LS-DYNA models with corresponding ANSYS models were run, one for the 14×14 case, shown in Figure 11.A.2.15-2, and one for the 17×17 case, shown in Figure 11.A.2.15-3. In each case, the thickness of the clad was reduced by 120 microns (0.0047 inch). Each LS-DYNA model employs the same nodes and elements as the ANSYS models (with the incorporation of the 0.55-inch bow). Elastic properties are used in the ANSYS model and bilinear properties are employed in the LS-DYNA model. The acceleration of the Canister in a 24-inch drop of the VCC is applied to the fuel tube surrounding the fuel rods.

The LS-DYNA analyses were performed for the duration of 0.08 second to capture the response of the fuel. Post-processing each analysis result identifies the maximum shear stress occurring at the shell surface. The maximum shear stress result from LS-DYNA is multiplied by two to determine the maximum stress intensity. The maximum stresses for each case are summarized in the following table with the computed margins of safety. Note that all margins of safety are positive.

Case	Fuel Type	Maximum Stress Intensity (psi)	Yield Strength (psi)	Margin of Safety
1	14x14	21,667	69,600	2.21
2	17x17	39,037	69,600	0.78

The temperature of the fuel at the bottom end of the basket is bounded by 752°F (400°C); and from Reference 61, the static yield strength for irradiated zircaloy at 752°F is 69.6 ksi. This conservatively neglects any strengthening effect due to the dynamic loading for which yield strength values are reported in Reference 61.

Tip-Over Evaluation

The tip-over model is constructed of evenly spaced beam elements representing one fuel rod. The WE 17×17 configuration is chosen for evaluation as it has the smallest area moment of inertia to weight ratio. The fuel rods are supported in a tip-over accident at the locations of the support grids. As the support grids are approximately two inches wide, limited rotational restraint is developed. This is represented by constraining the model in all DOF at nodes a conservative 1.5 inches apart at the locations of the support grids. The thickness of the cladding is reduced by 120 microns (0.0047 in) to account for oxide layer buildup. The model is loaded with a linearly varying pressure, which is maximum at the top of the fuel rod as shown in Figure 11.A.2.15-4. The maximum value of this pressure is:

$$F_{max} = \frac{WG}{L} = \frac{4.94(105)}{144} = 3.602 \text{ lbs./in}$$

where:

W = Fuel rod weight = 4.94 lbs.
G = Acceleration loading = 105 G's
L = Active fuel length = 144 in.

The maximum stress calculated by the ANSYS model is 62,887 psi. This gives a factor of safety of:

$$FS = \frac{S_y}{S} - 1 = \frac{69{,}600}{62{,}887} - 1 = 0.11$$

This confirms that the PWR fuel rod subject to high burnup will remain intact for a tip-over accident condition.

Figure 11.A.2.15-1 LS-DYNA Model for the Fuel Assembly

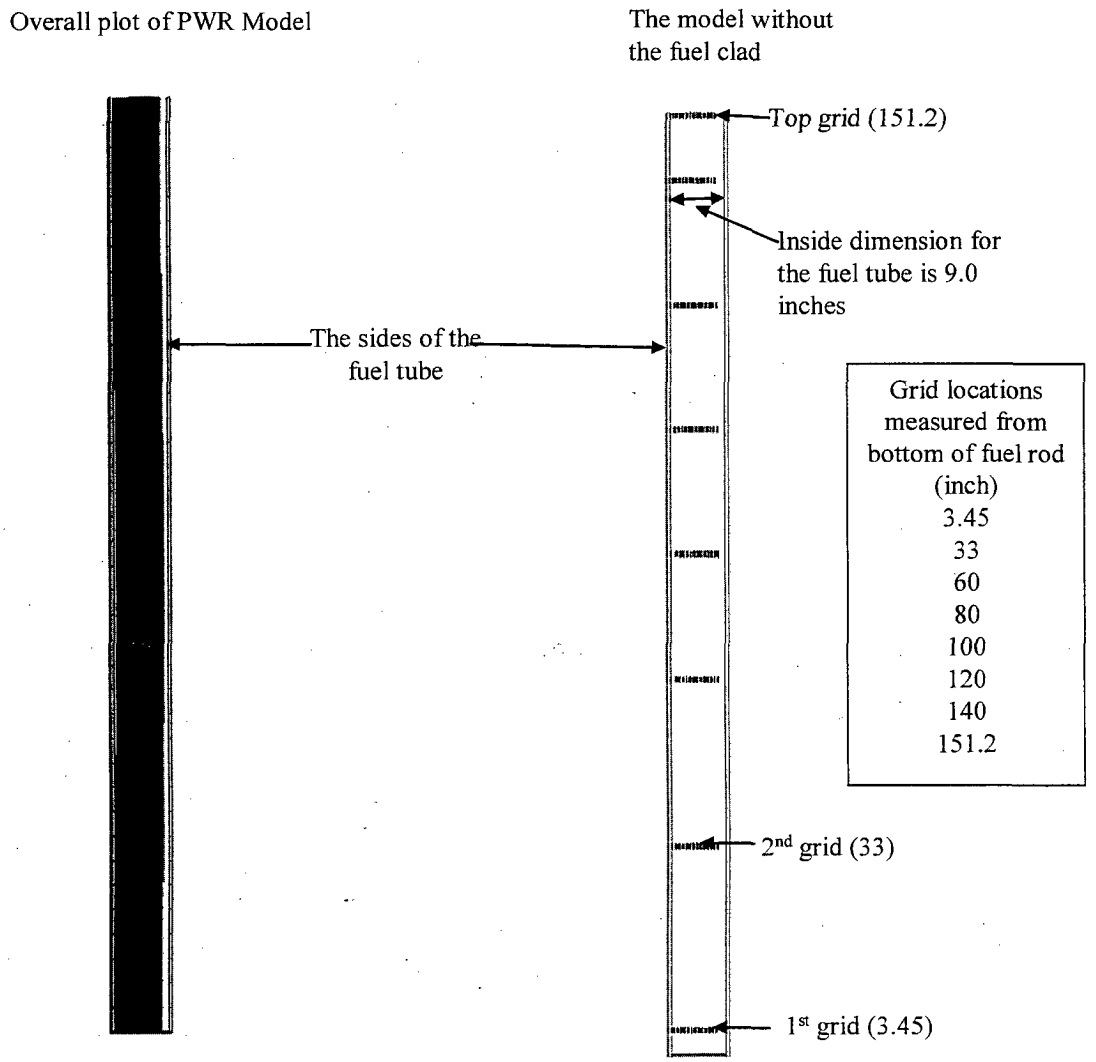

Figure 11.A.2.15-2 LS-DYNA Model for 14×14 Case

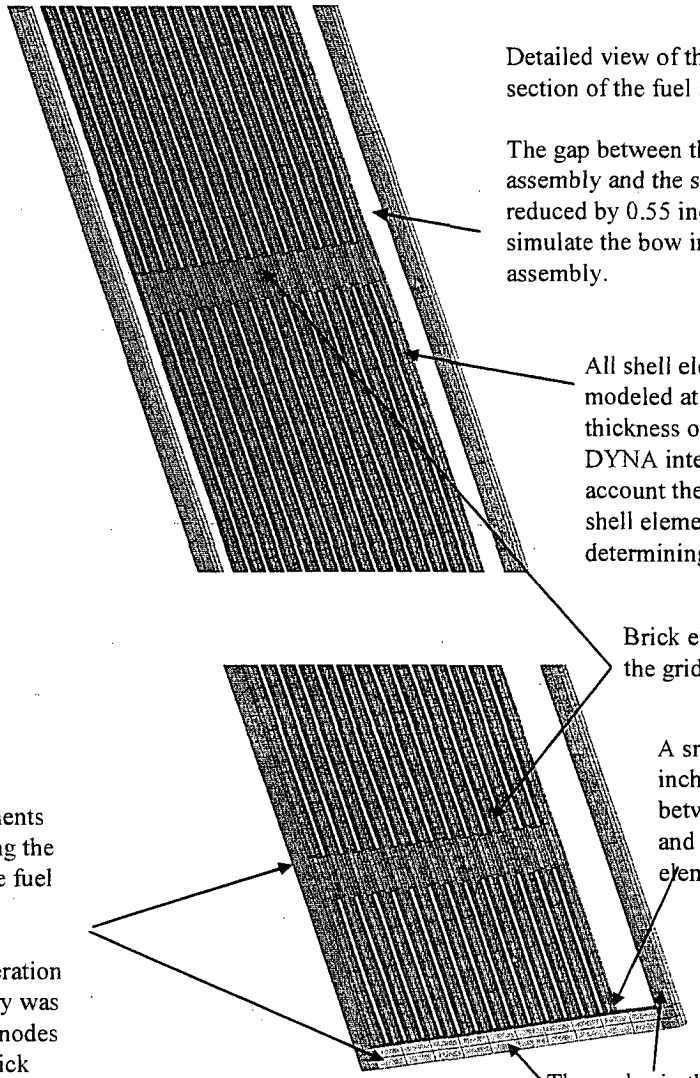

Figure 11.A.2.15-3 LS-DYNA Model for 17×17 Case

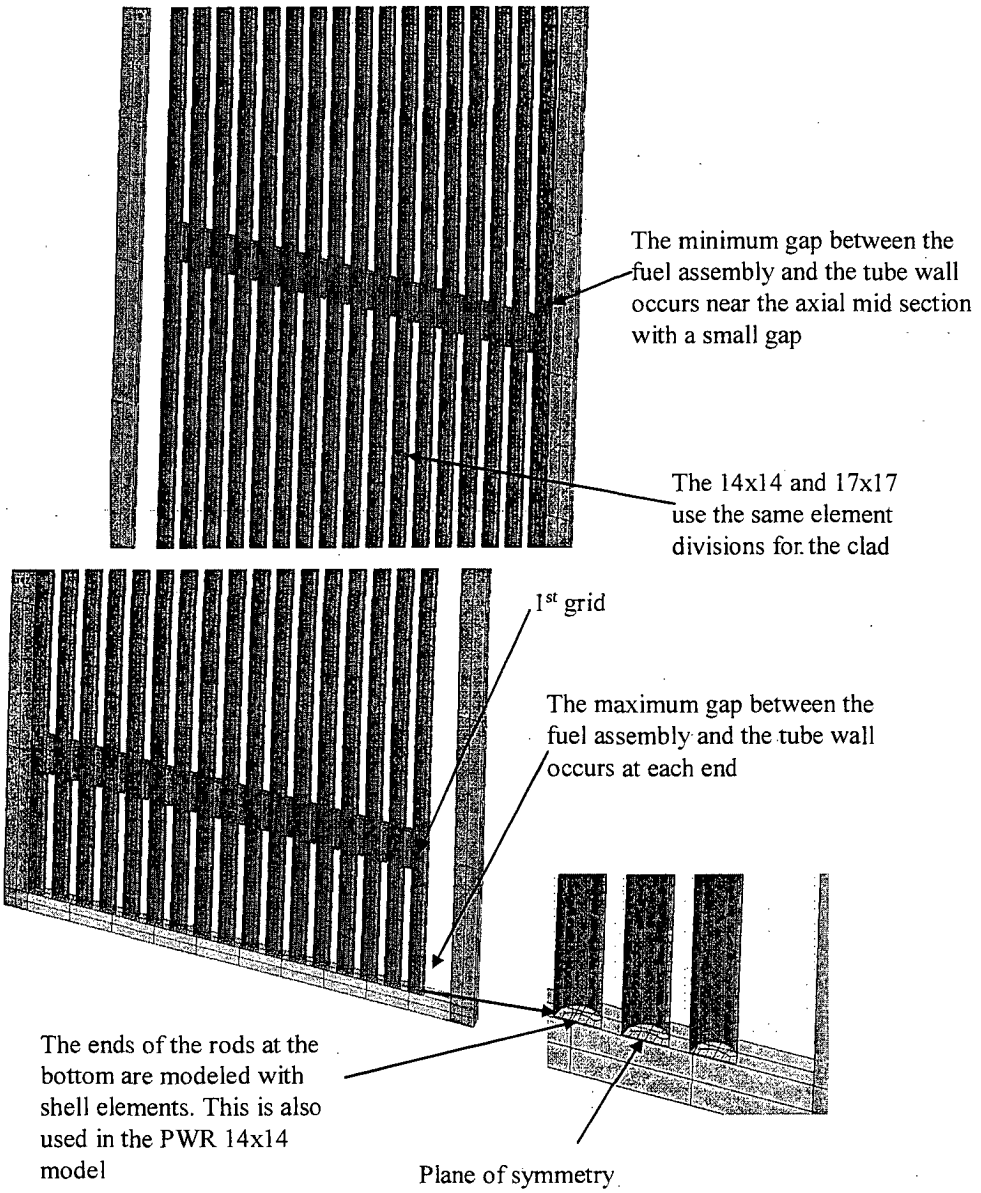

Figure 11.A.2.15-4 Linearly Varying Load on Beam Model for Tip-Over

11.A.2.15.2 Thermal Evaluation of Fuel Rods

This section presents a structural evaluation of PWR fuel rods with a maximum burnup of 45,000 MWd/MTU for normal and accident conditions of storage.

During normal and off-normal conditions for the fuel in the Canister, the loads applied to the fuel assembly are minimal and do not require further evaluation. The only significant axial loadings the fuel assembly will experience are the 24-inch drop of the VCC. The bounding lateral loading on the fuel assembly occurs during the tip-over accident condition.

11.A.3 References

The UNITAD Storage System references are the same as those for the NAC-UMS® Storage System in FSAR Section 11.3, except that ASME Boiler and Pressure Vessel Code, 2004 Edition, will be used.

THIS PAGE INTENTIONALLY LEFT BLANK

Table of Contents

12.0 OPERATING CONTROLS AND LIMITS 12-1

Appendix 12.A Technical Specifications for the NAC-UMS® System 12.A-1

Appendix 12.B Approved Contents and Design Features for the NAC-UMS® System . 12.B-1

Appendix 12.C Technical Specification Bases for the NAC-UMS® System 12.C-1

List of Tables

Table 12-1 NAC-UMS® System Controls and Limits 12-iv

12.0 OPERATING CONTROLS AND LIMITS

This chapter identifies operating controls and limits, technical parameters and surveillance requirements imposed to ensure the safe operation of the NAC-UMS® System including the UNITAD Storage System.

Controls used by NAC International (NAC) as part of the NAC-UMS System, including the UNITAD Storage System design and fabrication, are provided in the NAC Quality Assurance Manual and Quality Procedures. The NAC Quality Assurance Program is discussed in Chapter 13.0. If procurement and fabrication of the NAC-UMS System, including the UNITAD Storage System,is performed by others, a Quality Assurance Program prepared in accordance with 10 CFR 72 Subpart G shall be implemented. Site-specific controls for the organization, administrative system, procedures, record keeping, review, audit and reporting necessary to ensure that the NAC-UMS System and the UNITAD Storage System installation are operated in a safe manner, are the responsibility of the User.

The NAC-UMS System, including the UNITAD Storage System, is provided in two configurations. The NAC-UMS System is designed to store up to 24 PWR spent fuel assemblies or 56 BWR fuel assemblies. The UNITAD Storage System is designed to store up to 21 undamaged PWR spent fuel assemblies. Certain site-specific PWR spent fuel assemblies require preferential loading in the NAC-UMS System as described in Appendix B of the Certificate of Compliance.

The NAC-UMS System, including the UNITAD Storage System, operating controls and limits are summarized in Table 12-1. Appendix A of the Certificate of Compliance provides the Limiting Conditions for Operations (LCO) for the NAC-UMS System including the UNITAD Storage System. The Approved Contents and Design Features for the NAC-UMS System, including the UNITAD Storage System, are presented in Technical Specification format in Appendix 12.B. The Bases for the specified controls and limits are presented in Appendix 12.C. Separate controls, or limits, are specified for the NAC-UMS System and the UNITAD Storage System, as appropriate.

Section 3.0 of Appendix B presents Design Features that are important to the safe operation of the NAC-UMS System including the UNITAD Storage System, but that are not included as Technical Specifications. These include items, which are single events, that cannot be readily determined or reverified at the time of use of the system, or that are easily implemented, verified and corrected, if necessary, at the time the action is undertaken.

Table 12-1 NAC-UMS System Controls and Limits

Control or Limit	Applicable Technical Specification	Condition or Item Controlled
1. Approved Contents	Table B 2-1	Fuel Assembly Limits
	Table B 2-2	PWR Fuel Assembly Characteristics (Not applicable to UNITAD STORAGE SYSTEM)
	Table B 2-3	BWR Fuel Assembly Characteristics (Not applicable to UNITAD STORAGE SYSTEM)
	Table B 2-4	Minimum Cooling Time Versus Burnup/Initial Enrichment for PWR Fuel (Not applicable to UNITAD STORAGE SYSTEM)
	Table B 2-5	Minimum Cooling Time Versus Burnup/Initial Enrichment for BWR Fuel (Not applicable to UNITAD STORAGE SYSTEM)
	Table B 2-6	Maine Yankee Site Specific Fuel Canister Loading Position summary Minimum Cooling Time Versus Burnup/Initial Enrichment for PWR Fuel (Not applicable to UNITAD STORAGE SYSTEM)
	Table B 2-7	Maine Yankee Site Specific Fuel Limits (Not applicable to UNITAD STORAGE SYSTEM)
	Table B 2-8	Loading Table for Maine Yankee CE 14 x 14 Fuel with No Non-Fuel Material – Required Cool Time in Years Before Assembly is Acceptable (Not applicable to UNITAD STORAGE SYSTEM)
	Table B 2-9	Loading Table for Maine Yankee CE 14 x 14 Fuel Containing CEA Cooled to Indicated Time (Not applicable to UNITAD STORAGE SYSTEM)
	Table B 2-10	PWR Fuel Assembly Characteristics for the UNITAD STORAGE SYSTEM
	Table B 2-11	Minimum Cooling Time Versus Burnup/Initial Enrichment for PWR Fuel for the UNITAD STORAGE SYSTEM
2. Canister	LCO 3.1.4	Maximum Time in TRANSFER CASK
Drying	LCO 3.1.2	Vacuum Drying Pressure
Backfilling	LCO 3.1.3	Helium Backfill Pressure
Sealing	LCO 3.1.5	Helium Leak Rate
Vacuum	LCO 3.1.1	Maximum Time in Vacuum Drying
External Surface	LCO 3.2.1	Surface Contamination
Loading	LCO 3.3.1	Dissolved Boron Concentration

Table 12-1 NAC-UMS System Controls and Limits (continued)

Control or Limit	Applicable Technical Specification	Condition or Item Controlled
3. Concrete Cask	LCO 3.2.2 Note 1 Note 2 LCO 3.1.6	Average Surface Dose Rates Cask Spacing Cask Handling Height Heat Removal System
4. Transfer Cask	B 3.4(8)	Minimum Temperature
5. ISFSI Concrete Pad	Note 3 Note 3 Note 3	Pad Concrete Thickness Pad Subsoil Thickness Pad Concrete Compressive Strength

1. Limits are presented in the Operating Procedures of Chapter 8.
2. Lifting height and handling restrictions for the NAC-UMS Storage System, including the UNITAD Storage System, are provided in Section A5.6 of Appendix 12.A.
3. Limits are verified at the time of construction of the ISFSI in accordance with Section B 3.4.1(6) of Appendix 12.B of the Technical Specifications.

THIS PAGE INTENTIONALLY LEFT BLANK

APPENDIX 12.A

TECHNICAL SPECIFICATIONS FOR THE NAC-UMS® SYSTEM

AMENDMENT 6

The Technical Specifications for the NAC-UMS System addressing the Limiting Conditions for Operations (LCOs), Surveillance Requirements (SRs), and the Administrative Controls and Programs, are incorporated in Appendix A of Certificate of Compliance No. 1015, Amendment 6. The Technical Specifications proposed herein have been expanded to include the LCOs, SRs and Administrative Controls and Programs for the UNITAD Storage System.

Appendix 12.A
Table of Contents

A 1.0 USE AND APPLICATION 12.A.1-1
A 1.1 Definitions 12.A.1-1
A 1.2 Logical Connectors 12.A.1-9
A 1.3 Completion Times 12.A.1-12
A 1.4 Frequency 12.A.1-17

A 2.0 [Reserved] 12.A.2-1

A 3.0 LIMITING CONDITION FOR OPERATION (LCO) APPLICABILITY 12.A.3-1
SURVEILLANCE REQUIREMENT (SR) APPLICABILITY 12.A.3-2
A 3.1 NAC-UMS® SYSTEM Integrity 12.A.3-4
A 3.1.1 CANISTER Maximum Time in Vacuum Drying 12.A.3-4
A 3.1.2 CANISTER Vacuum Drying Pressure 12.A.3-7
A 3.1.3 CANISTER Helium Backfill Pressure 12.A.3-8
A 3.1.4 CANISTER Maximum Time in TRANSFER CASK 12.A.3-9
A 3.1.5 CANISTER Helium Leak Rate (Not Applicable to the UNITAD STORAGE SYSTEM) 12.A.3-12
A 3.1.6 CONCRETE CASK Heat Removal System 12.A.3-13
A 3.2 NAC-UMS® SYSTEM Radiation Protection 12.A.3-15
A 3.2.1 CANISTER Surface Contamination 12.A.3-15
A 3.2.2 CONCRETE CASK Average Surface Dose Rates 12.A.3-17
A 3.3 NAC-UMS® SYSTEM Criticality Control 12.A.3-21
A 3.3.1 Dissolved Boron Concentration 12.A.3-21

Figure A3-1 CONCRETE CASK Surface Dose Rate Measurement for the NAC-UMS STORAGE SYSTEM (UNITAD STORAGE SYSTEM not included) 12.A.3-19
Figure A3-2 CONCRETE CASK Surface Dose Rate Measurement for the UNITAD STORAGE SYSTEM 12.A.3-20

A 4.0 [Reserved] 12.A.4-1

A 5.0 ADMINISTRATIVE CONTROLS AND PROGRAMS 12.A.5-1
A 5.1 Training Program 12.A.5-1
A 5.2 Preoperational Testing and Training Exercises 12.A.5-1
A 5.3 Special Requirements for the First System Placed in Service 12.A.5-2
A 5.4 Surveillance After an Off-Normal, Accident, or Natural Phenomena Event 12.A.5-2
A 5.5 Radioactive Effluent Control Program 12.A.5-3

Appendix 12.A
Table of Contents (continued)

A 5.6 NAC-UMS® SYSTEM, Including the UNITAD STORAGE SYSTEM, Transport Evaluation Program 12.A.5-3

Table A5-1 TRANSFER CASK and CONCRETE CASK Lifting Requirements 12.A.5-5

A 1.0 USE AND APPLICATION

A 1.1 Definitions

----------NOTE----------
The defined terms of this section appear in capitalized type and are applicable throughout this section.

Term	Definition
ACTIONS	ACTIONS shall be that part of a Specification that prescribes Required Actions to be taken under designated Conditions within specified Completion Times.
ASSEMBLY DEFECT	Any change in the physical as-built condition of the assembly, with the exception of normal in-reactor changes such as elongation from irradiation growth or assembly bow. Examples of ASSEMBLY DEFECTS include: (a) missing rods, (b) broken or missing grids or grid straps (spacer), and (c) missing or broken grid springs, etc. An assembly with a defect is damaged only if it cannot meet its fuel-specific and system-related functions.
BREACHED SPENT FUEL ROD	Spent fuel with cladding defects that permit the release of gas from the interior of the fuel rod. A fuel rod breach may be a minor defect (i.e., hairline crack or pinhole), allowing the rod to be classified as undamaged, or be a gross breach requiring a damaged fuel classification.
CANISTER	See TRANSPORTABLE STORAGE CANISTER

(continued)

CANISTER HANDLING FACILITY	The CANISTER HANDLING FACILITY includes the following components and equipment: (1) a canister transfer station that allows the staging of the TRANSFER CASK with the CONCRETE CASK or transport cask to facilitate CANISTER lifts involving spent fuel handling not covered by 10 CFR 50; and (2) either a stationary lift device or mobile lifting device used to lift the TRANSFER CASK and CANISTER.
CONCRETE CASK	See VERTICAL CONCRETE CASK
CONSOLIDATED FUEL	A nonstandard fuel configuration in which the undamaged individual fuel rods from one or more fuel assemblies are placed in a single container or a lattice structure that is similar to a fuel assembly. CONSOLIDATED FUEL is stored in a MAINE YANKEE FUEL CAN.
DAMAGED FUEL	Spent nuclear fuel (SNF) that cannot fulfill its fuel-specific or system-related function. DAMAGED FUEL must be placed in a MAINE YANKEE FUEL CAN unless otherwise noted. Spent fuel is classified as damaged under the following conditions. 1. There is visible deformation of the rods in the SNF assembly. Note: This is not referring to the uniform bowing that occurs in the reactor; this refers to bowing that significantly opens up the lattice spacing. 2. Individual fuel rods are missing from the assembly and the missing rods are not replaced by solid dummy/filler rods that displace a volume equal to, or greater than, the original fuel rods. Note: Maine Yankee fuel assemblies with missing rods, not replaced by solid dummy/filler rods, are an exception based upon the criticality analysis done for these assemblies. They are, therefore, considered to be undamaged. However, these Maine Yankee assemblies must be preferentially loaded per Tables 12.B2-6 and 12.B2-7.

(continued)

DAMAGED FUEL (cont'd)

3. The SNF assembly has missing, displaced or damaged structural components such that either:

   - Radiological and/or criticality safety is adversely affected (e.g., significantly changed rod pitch); or
   - The assembly cannot be handled by normal means (i.e., crane and grapple).

   Note: PWR assemblies with the following structural defects meet UMS system-related functional requirements and are, therefore, classified as undamaged.

   - Grid, grid strap, and/or grid strap spring damage in PWR assemblies such that the unsupported length of the fuel rod does not exceed 60 inches.

4. Any SNF assembly that contains fuel rods for which reactor operating records (or other records or tests) cannot support the conclusion that they do not contain gross breaches.

   Note: Breached fuel rods with minor cladding defects (i.e, pinhole leaks or hairline cracks that will not permit significant release of particulate matter from the spent fuel rod) meet UMS system-related functional requirements and are, therefore, classified as undamaged.

5. The SNF assembly is no longer in the form of an intact fuel bundle (e.g., consists of or contains debris such as loose fuel pellets or rod segments).

FUEL DEBRIS

An intact or a partial fuel rod or an individual intact or partial fuel pellet not contained in a fuel rod. Fuel debris is inserted into a 9 × 9 array of tubes in a lattice that has approximately the same dimensions as a standard fuel assembly. FUEL DEBRIS is stored in a MAINE YANKEE FUEL CAN.

(continued)

GROSSLY BREACHED SPENT FUEL ROD	A breach in the spent fuel cladding that is larger than a pinhole or hairline crack. A gross cladding breach may be established by visual examination with the capability to determine if the fuel pellet can be seen through the cladding, or through a review of reactor operating records indicating the presence of heavy metal isotopes.
HIGH BURNUP FUEL	A fuel assembly meeting the definition of a standard fuel assembly with an assembly average burnup between 45,000 and 60,000 MWd/MTU. Maximum peak average rod burnup is limited to 62,500 MWd/MTU.
INDEPENDENT SPENT FUEL STORAGE INSTALLATION (ISFSI)	The facility within the perimeter fence licensed for storage of spent fuel within NAC-UMS® SYSTEMs (see also 10 CFR 72.3).
INITIAL PEAK PLANAR-AVERAGE ENRICHMENT	THE INITIAL PEAK PLANAR-AVERAGE ENRICHMENT is the maximum planar-average enrichment at any height along the axis of the fuel assembly. The 4.7 wt % ^{235}U enrichment limit for BWR fuel applies along the full axial extent of the assembly. The INITIAL PEAK PLANAR-AVERAGE ENRICHMENT may be higher than the bundle (assembly) average enrichment.
INTACT FUEL (ASSEMBLY OR ROD)	Any fuel that can fulfill all fuel-specific and system-related functions and that is not breached.
LOADING OPERATIONS	LOADING OPERATIONS include all licensed activities on a NAC-UMS® SYSTEM or a UNITAD STORAGE SYSTEM while it is being loaded with fuel assemblies. LOADING OPERATIONS begin when the first fuel assembly is placed in the CANISTER and end when the NAC-UMS® SYSTEM or the UNITAD STORAGE SYSTEM is secured on the transporter. LOADING OPERATIONS do not include post-storage operations, i.e., CANISTER transfer operations between the TRANSFER CASK and the CONCRETE CASK or transport cask after STORAGE OPERATIONS.

(continued)

MAINE YANKEE FUEL CAN	A specially designed stainless steel screened can sized to hold UNDAMAGED FUEL, CONSOLIDATED FUEL, DAMAGED FUEL or FUEL DEBRIS. The screens preclude the release of gross particulate from the can into the canister cavity. The MAINE YANKEE FUEL CAN may only be loaded in a Class 1 canister.
NAC-UMS® SYSTEM	NAC-UMS® SYSTEM includes the components approved for loading and storage of spent fuel assemblies at the ISFSI. The NAC-UMS® SYSTEM consists of a CONCRETE CASK, a TRANSFER CASK, and a CANISTER.
OPERABLE	An OPERABLE CONCRETE CASK heat removal system transfers sufficient heat away from the fuel assemblies such that the fuel cladding and CANISTER component temperatures do not exceed applicable limits. The CONCRETE CASK heat removal system is considered OPERABLE if the difference between the ISFSI ambient temperature and the average outlet air temperature is ≤102°F for the NAC-UMS PWR canister or ≤92°F for the NAC-UMS BWR canister, or if the UNITAD STORAGE SYSTEM meets the predicted temperature in accordance with the SAR, or if all four air inlet and outlet screens are visually verified to be unobstructed. Failing this, a CONCRETE CASK heat removal system may be declared OPERABLE if an engineering evaluation determines the CONCRETE CASK has adequate heat transfer capabilities to assure continued spent fuel and CANISTER integrity.

(continued)

SITE SPECIFIC FUEL	Spent fuel configurations that are unique to a site or reactor due to the addition of other components or reconfiguration of the fuel assembly at the site. It includes fuel assemblies, which hold nonfuel-bearing components, such as a control element assembly, a burnable poison rod insert, a solid stainless steel rod insert, an in-core instrument thimble or a flow mixer, or which are modified as required by expediency in reactor operations, research and development or testing. Modification may consist of individual fuel rod removal, fuel rod replacement of similar or dissimilar material or enrichment, the installation, removal or replacement of burnable poison rods or solid stainless steel rods, or containerizing damaged fuel. Site specific fuel includes irradiated fuel assemblies designed with variable enrichments and/or axial blankets, fuel that is consolidated and fuel that exceeds design basis fuel parameters.
STANDARD FUEL	Irradiated fuel assemblies having the same configuration as when originally fabricated consisting generally of the end fittings, fuel rods, guide tubes, and integral hardware. For PWR fuel, a flow mixer, an in-core instrument thimble or a burnable poison rod insert is considered to be a component of standard fuel. For BWR fuel, the channel is considered to be integral hardware. The design basis fuel characteristics and analysis are based on the STANDARD FUEL configuration.
STORAGE OPERATIONS	STORAGE OPERATIONS include all licensed activities that are performed at the ISFSI, while an NAC-UMS® SYSTEM containing spent fuel is located on the storage pad within the ISFSI perimeter.
TRANSFER CASK	TRANSFER CASK is a shielded lifting device that holds the CANISTER during LOADING and UNLOADING OPERATIONS and during closure welding, vacuum drying, leak testing, and nondestructive examination of the CANISTER closure welds. The TRANSFER CASK is also used to transfer the CANISTER into and from the CONCRETE CASK and into the transport cask. TRANSFER CASK refers to either the standard or advanced transfer cask.

(continued)

TRANSFER OPERATIONS	TRANSFER OPERATIONS include all licensed activities involved in transferring a loaded CANISTER from a CONCRETE CASK to another CONCRETE CASK or to a TRANSPORT CASK.
TRANSPORT OPERATIONS	TRANSPORT OPERATIONS include all licensed activities involved in moving a loaded NAC-UMS® or UNITAD CONCRETE CASK and CANISTER to and from the ISFSI. TRANSPORT OPERATIONS begin when the NAC-UMS® or UNITAD SYSTEM is first secured on the transporter and end when the NAC-UMS® or UNITAD SYSTEM is at its destination and no longer secured on the transporter.
TRANSPORTABLE STORAGE CANISTER (CANISTER)	TRANSPORTABLE STORAGE CANISTER is the sealed container that consists of a tube and disk fuel basket in a cylindrical canister shell that is welded to a baseplate, shield lid with welded port covers, and structural lid. The CANISTER provides the confinement boundary for the confined spent fuel.
UNDAMAGED FUEL	Spent nuclear fuel that can meet all fuel specific and system-related functions. UNDAMAGED FUEL is spent nuclear fuel that is not DAMAGED FUEL, as defined herein, and does not contain assembly structural defects that adversely affect radiological and/or criticality safety. As such, UNDAMAGED FUEL may contain: a) Breached spent fuel rods (i.e, rods with minor defects up to hairline cracks or pinholes) but cannot contain grossly breached fuel rods; b) Grid, grid strap, and/or grid spring damage in PWR assemblies, provided that the unsupported length of the fuel rod does not exceed 60 inches (not applicable to the UNITAD STORAGE SYSTEM).
UNITAD STORAGE SYSTEM (UNITAD SYSTEM)	UNITAD STORAGE SYSTEM includes the components approved for loading and storage of spent fuel assemblies at an ISFSI. The UNITAD STORAGE SYSTEM consists of a VERTICAL CONCRETE CASK, A TRANSFER CASK, and a CANISTER.

(continued)

UNLOADING OPERATIONS	UNLOADING OPERATIONS include all licensed activities on a NAC-UMS® or UNITAD SYSTEM to be unloaded of the contained fuel assemblies. UNLOADING OPERATIONS begin when the NAC-UMS® or UNITAD SYSTEM is no longer secured on the transporter and end when the last fuel assembly is removed from the NAC-UMS® or UNITAD SYSTEM.
VERTICAL CONCRETE CASK (CONCRETE CASK)	VERTICAL CONCRETE CASK is the cask that receives and holds the sealed CANISTER. It provides the gamma and neutron shielding and convective cooling of the spent fuel confined in the CANISTER.

A 1.0 USE AND APPLICATION

A 1.2 Logical Connectors

PURPOSE

The purpose of this section is to explain the meaning of logical connectors.

Logical connectors are used in Technical Specifications (TS) to discriminate between, and yet connect, discrete Conditions, Required Actions, Completion Times, Surveillances, and Frequencies. The only logical connectors that appear in Technical Specifications are "AND" and "OR." The physical arrangement of these connectors constitutes logical conventions with specific meanings.

BACKGROUND

Several levels of logic may be used to state Required Actions. These levels are identified by the placement (or nesting) of the logical connectors and by the number assigned to each Required Action. The first level of logic is identified by the first digit of the number assigned to a Required Action and the placement of the logical connector in the first level of nesting (i.e., left justified with the number of the Required Action). The successive levels of logic are identified by additional digits of the Required Action number and by successive indentations of the logical connectors.

When logical connectors are used to state a Condition, Completion Time, Surveillance, or Frequency, only the first level of logic is used; the logical connector is left justified with the statement of the Condition, Completion Time, Surveillance, or Frequency.

(continued)

EXAMPLES The following examples illustrate the use of logical connectors.

EXAMPLES EXAMPLE 1.2-1

ACTIONS

CONDITION	REQUIRED ACTION	COMPLETION TIME
A. LCO not met	A.1 Verify. . . AND A.2 Restore. . .	

In this example, the logical connector "AND" is used to indicate that when in Condition A, both Required Actions A.1 and A.2 must be completed.

(continued)

EXAMPLES (continued)

EXAMPLE 1.2-2

ACTIONS

CONDITION	REQUIRED ACTION		COMPLETION TIME
A. LCO not met	A.1	Stop. . .	
	OR		
	A.2.1	Verify. . .	
	AND		
	A.2.2		
	A.2.2.1	Reduce. . .	
		OR	
	A.2.2.2	Perform. . .	
	OR		
	A.3	Remove. . .	

This example represents a more complicated use of logical connectors. Required Actions A.1, A.2, and A.3 are alternative choices, only one of which must be performed as indicated by the use of the logical connector "OR" and the left justified placement. Any one of these three Actions may be chosen. If A.2 is chosen, then both A.2.1 and A.2.2 must be performed as indicated by the logical connector "AND." Required Action A.2.2 is met by performing A.2.2.1 or A.2.2.2. The indented position of the logical connector "OR" indicated that A.2.2.1 and A.2.2.2 are alternative choices, only one of which must be performed.

A 1.0 USE AND APPLICATION

A 1.3 Completion Times

PURPOSE	The purpose of this section is to establish the Completion Time convention and to provide guidance for its use.
BACKGROUND	Limiting Conditions for Operations (LCOs) specify the lowest functional capability or performance levels of equipment required for safe operation of the NAC-UMS® SYSTEM. The ACTIONS associated with an LCO state conditions that typically describe the ways in which the requirements of the LCO can fail to be met. Specified with each stated Condition are Required Action(s) and Completion Time(s).
DESCRIPTION	The Completion Time is the amount of time allowed for completing a Required Action. It is referenced to the time of discovery of a situation (e.g., equipment or variable not within limits) that requires entering an ACTIONS Condition, unless otherwise specified, provided that the NAC-UMS® SYSTEM is in a specified Condition stated in the Applicability of the LCO. Prior to the expiration of the specified Completion Time, Required Actions must be completed. An ACTIONS Condition remains in effect and the Required Actions apply until the Condition no longer exists or the NAC-UMS® SYSTEM is not within the LCO Applicability. Once a Condition has been entered, subsequent subsystems, components, or variables expressed in the Condition, discovered to be not within limits, will not result in separate entry into the Condition, unless specifically stated. The Required Actions of the Condition continue to apply to each additional failure, with Completion Times based on initial entry into the Condition.

(continued)

EXAMPLES

The following examples illustrate the use of Completion Times with different types of Conditions and changing Conditions.

EXAMPLE 1.3-1

ACTIONS

CONDITION	REQUIRED ACTION	COMPLETION TIME
B. Required Action and associated Completion Time not met	B.1 Perform Action B.1	12 hours
	AND	
	B.2 Perform Action B.2	36 hours

Condition B has two Required Actions. Each Required Action has its own Completion Time. Each Completion Time is referenced to the time that Condition B is entered.

The Required Actions of Condition B are to complete action B.1 within 12 hours AND complete action B.2 within 36 hours. A total of 12 hours is allowed for completing action B.1 and a total of 36 hours (not 48 hours) is allowed for completing action B.2 from the time that Condition B was entered. If action B.1 is completed within six hours, the time allowed for completing action B.2 is the next 30 hours because the total time allowed for completing action B.2 is 36 hours.

(continued)

EXAMPLES (continued)

EXAMPLE 1.3-2

ACTIONS

CONDITION	REQUIRED ACTION	COMPLETION TIME
A. One System not within limit	A.1 Restore System to within limit	7 days
B. Required Action and associated Completion Time not met	B.1 Complete action B.1 AND B.2 Complete action B.2	12 hours 36 hours

When a System is determined not to meet the LCO, Condition A is entered. If the System is not restored within seven days, Condition B is also entered, and the Completion Time clocks for Required Actions B.1 and B.2 start. If the System is restored after Condition B is entered, Conditions A and B are exited; therefore, the Required Actions of Condition B may be terminated.

(continued)

EXAMPLES (continued)

EXAMPLE 1.3-3

ACTIONS

----------NOTE----------

Separate Condition entry is allowed for each component.

CONDITION	REQUIRED ACTION		COMPLETION TIME
A. LCO not met	A.1	Restore compliance with LCO	4 hours
B. Required Action and associated Completion Time not met	B.1	Complete action B.1	6 hours
	AND		
	B.2	Complete action B.2	12 hours

The Note above the ACTIONS table is a method of modifying how the Completion Time is tracked. If this method of modifying how the Completion Time is tracked was applicable only to a specific Condition, the Note would appear in that Condition rather than at the top of the ACTIONS Table.

The Note allows Condition A to be entered separately for each component, and Completion Times to be tracked on a per component basis. When a component is determined to not meet the LCO, Condition A is entered and its Completion Time starts. If subsequent components are determined to not meet the LCO, Condition A is entered for each component and separate Completion Times are tracked for each component.

(continued)

EXAMPLES (continued)	EXAMPLE 1.3-3
IMMEDIATE COMPLETION TIME	When "Immediately" is used as a Completion Time, the Required Action should be pursued without delay and in a controlled manner.

A 1.0 USE AND APPLICATION

A 1.4 Frequency

PURPOSE

The purpose of this section is to define the proper use and application of Frequency requirements.

DESCRIPTION

Each Surveillance Requirement (SR) has a specified Frequency in which the Surveillance must be met in order to meet the associated Limiting Condition for Operation (LCO). An understanding of the correct application of the specified Frequency is necessary for compliance with the SR.

Each "specified Frequency" is referred to throughout this section and each of the Specifications of Section 3.0, Surveillance Requirement (SR) Applicability. The "specified Frequency" consists of requirements of the Frequency column of each SR.

Situations where a Surveillance could be required (i.e., its Frequency could expire), but where it is not possible or not desired that it be performed until sometime after the associated LCO is within its Applicability, represent potential SR 3.0.4 conflicts. To avoid these conflicts, the SR (i.e., the Surveillance or the Frequency) is stated such that it is only "required" when it can be and should be performed. With an SR satisfied, SR 3.0.4 imposes no restriction.

The use of "met" or "performed" in these instances conveys specific meanings. A Surveillance is "met" only after the acceptance criteria are satisfied. Known failure of the requirements of a Surveillance, even without a Surveillance specifically being "performed," constitutes a Surveillance not "met."

(continued)

EXAMPLES

The following examples illustrate the various ways that Frequencies are specified.

EXAMPLE 1.4-1

SURVEILLANCE REQUIREMENTS

SURVEILLANCE	FREQUENCY
Verify pressure within limit	12 hours

Example 1.4-1 contains the type of SR most often encountered in the Technical Specifications (TS). The Frequency specifies an interval (12 hours) during which the associated Surveillance must be performed at least one time. Performance of the Surveillance initiates the subsequent interval. Although the Frequency is stated as 12 hours, SR 3.0.2 allows an extension of the time interval to 1.25 times the interval specified in the Frequency for operational flexibility. The measurement of this interval continues at all times, even when the SR is not required to be met per SR 3.0.1 (such as when the equipment or variables are outside specified limits, or the facility is outside the Applicability of the LCO). If the interval specified by SR 3.0.2 is exceeded while the facility is in a condition specified in the Applicability of the LCO, the LCO is not met in accordance with SR 3.0.1.

If the interval as specified by SR 3.0.2 is exceeded while the facility is not in a condition specified in the Applicability of the LCO for which performance of the SR is required, the Surveillance must be performed within the Frequency requirements of SR 3.0.2, prior to entry into the specified condition. Failure to do so would result in a violation of SR 3.0.4.

(continued)

EXAMPLE 1.4-2

SURVEILLANCE REQUIREMENTS

SURVEILLANCE	FREQUENCY
Verify flow is within limits	Once within 12 hours prior to starting activity AND 24 hours thereafter

Example 1.4-2 has two Frequencies. The first is a one time performance Frequency, and the second is of the type shown in Example 1.4-1. The logical connector "AND" indicates that both Frequency requirements must be met. Each time the example activity is to be performed, the Surveillance must be performed within 12 hours prior to starting the activity.

The use of "once" indicates a single performance will satisfy the specified Frequency (assuming no other Frequencies are connected by "AND"). This type of Frequency does not qualify for the 25% extension allowed by SR 3.0.2.

"Thereafter" indicates future performances must be established per SR 3.0.2, but only after a specified condition is first met (i.e., the "once" performance in this example). If the specified activity is canceled or not performed, the measurement of both intervals stops. New intervals start upon preparing to restart the specified activity.

THIS PAGE INTENTIONALLY LEFT BLANK

A 2.0 [Reserved]

THIS PAGE INTENTIONALLY LEFT BLANK

A 3.0 LIMITING CONDITION FOR OPERATION (LCO) APPLICABILITY

LCO 3.0.1	LCOs shall be met during specified conditions in the Applicability, except as provided in LCO 3.0.2.
LCO 3.0.2	Upon failure to meet an LCO, the Required Actions of the associated Conditions shall be met, except as provided in LCO 3.0.5. If the LCO is met or is no longer applicable prior to expiration of the specified Completion Time(s), completion of the Required Action(s) is not required, unless otherwise stated.
LCO 3.0.3	Not applicable to a NAC-UMS® SYSTEM.
LCO 3.0.4	When an LCO is not met, entry into a specified condition in the Applicability shall not be made except when the associated ACTIONS to be entered permit continued operation in the specified condition in the Applicability for an unlimited period of time. This Specification shall not prevent changes in specified conditions in the Applicability that are required to comply with ACTIONS or that are related to the unloading of an NAC-UMS® SYSTEM. Exceptions to this Condition are stated in the individual Specifications. These exceptions allow entry into specified conditions in the Applicability where the associated ACTIONS to be entered allow operation in the specified conditions in the Applicability only for a limited period of time.
LCO 3.0.5	Equipment removed from service or not in service in compliance with ACTIONS may be returned to service under administrative control solely to perform testing required to demonstrate it meets the LCO or that other equipment meets the LCO. This is an exception to LCO 3.0.2 for the System to return to service under administrative control to perform the testing.

A 3.0 SURVEILLANCE REQUIREMENT (SR) APPLICABILITY

SR 3.0.1

SRs shall be met during the specified conditions in the Applicability for individual LCOs, unless otherwise stated in the SR. Failure to meet a Surveillance, whether such failure is experienced during the performance of the Surveillance or between performances of the Surveillance, shall be a failure to meet the LCO. Failure to perform a Surveillance within the specified Frequency shall be a failure to meet the LCO, except as provided in SR 3.0.3. Surveillances do not have to be performed on equipment or variables outside specified limits.

SR 3.0.2

The specified Frequency for each SR is met if the Surveillance is performed within 1.25 times the interval specified in the Frequency, as measured from the previous performance or as measured from the time a specified condition of the Frequency is met.

For Frequencies specified as "once," the above interval extension does not apply. If a Completion Time requires periodic performance on a "once per..." basis, the above Frequency extension applies to each performance after the initial performance.

Exceptions to this Specification are stated in the individual Specifications.

SR 3.0.3

If it is discovered that a Surveillance was not performed within its specified Frequency, then compliance with the requirement to declare the LCO not met may be delayed from the time of discovery up to 24 hours or up to the limit of the specified Frequency, whichever is less. This delay period is permitted to allow performance of the Surveillance.

If the Surveillance is not performed within the delay period, the LCO must immediately be declared not met, and the applicable Condition(s) must be entered.

(continued)

SR 3.0.3 (continued)	When the Surveillance is performed within the delay period and the Surveillance is not met, the LCO must immediately be declared not met, and the applicable Condition(s) must be entered.
SR 3.0.4	Entry into a specified Condition in the Applicability of an LCO shall not be made, unless the LCO's Surveillances have been met within their specified Frequency. This provision shall not prevent entry into specified conditions in the Applicability that are required to comply with Actions or that are related to the unloading of a NAC-UMS® SYSTEM.

A 3.1 NAC-UMS® SYSTEM Integrity

A 3.1.1 CANISTER Maximum Time in Vacuum Drying

LCO 3.1.1

For the NAC-UMS SYSTEM (UNITAD STORAGE SYSTEM not included), the following limits for vacuum drying time shall be met, as appropriate:

1. The time duration from completion of draining the CANISTER through completion of vacuum dryness testing and the completion of LCO A 3.1.3 shall not exceed the following time limits:

PWR

Total Heat Load (L) (kW)	Time Limit (Hours)	Total Heat Load (L) (kW)	Time Limit (Hours)
$20 < L \leq 23$	27	$11 < L \leq 14$	40
$17.6 < L \leq 20$	30	$8 < L \leq 11$	52
$14 < L \leq 17.6$	33	$L \leq 8$	103

BWR

Total Heat Load (L) (kW)	Time Limit (Hours)	Total Heat Load (L) (kW)	Time Limit (Hours)
$20 < L \leq 23$	25	$11 < L \leq 14$	45
$17 < L \leq 20$	27	$8 < L \leq 11$	72
$14 < L \leq 17$	33	$L \leq 8$	600

(continued)

2. The time duration from the end of 24 hours of in-pool cooling or of forced air cooling of the CANISTER through completion of vacuum dryness testing and the completion of LCO A 3.1.3 shall not exceed the following limits:

PWR Forced Air		PWR In-Pool	
Total Heat Load (L) (kW)	Time Limit (Hours)	Total Heat Load (L) (kW)	Time Limit (Hours)
20 < L ≤ 23	3	20 < L ≤ 23	12
17.6 < L ≤ 20	6	17.6 < L ≤ 20	15
14 < L ≤ 17.6	9	14 < L ≤ 17.6	18
11 < L ≤ 14	16	11 < L ≤ 14	24
8 < L ≤ 11	27	8 < L ≤ 11	36
L ≤ 8	78	L ≤ 8	87

BWR Forced Air		BWR In-Pool	
Total Heat Load (L) (kW)	Time Limit (Hours)	Total Heat Load (L) (kW)	Time Limit (Hours)
20 < L ≤ 23	2	20 < L ≤ 23	10
17 < L ≤ 20	3	17 < L ≤ 20	11
14 < L ≤ 17	8	14 < L ≤ 17	17
11 < L ≤ 14	18	11 < L ≤ 14	26
L ≤ 11	41	L ≤ 11	52

Note: A CANISTER loaded with a fuel assembly having a burnup >45 GWd/MTU is limited to a total of nine (9) cooling/vacuum drying cycles performed in accordance with LCO 3.1.1.2.

APPLICABILITY: During LOADING OPERATIONS for the NAC-UMS SYSTEM. (UNITAD STORAGE SYSTEM not included, as there are no limits on vacuum drying time and helium backfill time durations.)

(continued)

ACTIONS

----------NOTE----------

Separate Condition entry is allowed for each NAC-UMS® SYSTEM. (UNITAD STORAGE SYSTEM not included.)

CONDITION	REQUIRED ACTION	COMPLETION TIME
A. LCO time limits not met	A.1 Fill CANISTER with helium	2 hours
	AND	
	A.2.1.1 Place TRANSFER CASK with helium filled loaded CANISTER in spent fuel pool.	2 hours
	AND	
	A.2.1.2 Maintain TRANSFER CASK and CANISTER in spent fuel pool for a minimum of 24 hours	26 hours
	OR	
	A.2.2.1 Commence supplying air to the TRANSFER CASK annulus fill/drain lines at a rate of 375 CFM and a maximum temperature of 76°F	2 hours
	AND	
	A.2.2.2 Maintain airflow for a minimum of 24 hours	26 hours

SURVEILLANCE REQUIREMENTS (UNITAD STORAGE SYSTEM not included)

SURVEILLANCE		FREQUENCY
SR 3.1.1.1	Monitor elapsed time from completion of CANISTER draining operations until completion of LCO A 3.1.3.	As required to meet the time limit
SR 3.1.1.2	Monitor elapsed time from the end of in-pool cooling or of forced-air cooling until completion of LCO A 3.1.3.	As required to meet the time limit

A 3.1 NAC-UMS® SYSTEM Integrity

A 3.1.2 CANISTER Vacuum Drying Pressure

LCO 3.1.2 The CANISTER vacuum drying pressure, ≤10 mm of mercury (Hg), shall be held for a minimum of 10 minutes with the vacuum pump isolated and turned off, with the pressure remaining ≤10 mm of Hg during the 10-minute period.

APPLICABILITY: During LOADING OPERATIONS for the NAC-UMS® SYSTEM, including the UNITAD STORAGE SYSTEM.

ACTIONS

----------NOTE----------
Separate Condition entry is allowed for each NAC-UMS® SYSTEM.

CONDITION	REQUIRED ACTION	COMPLETION TIME
A. CANISTER vacuum drying pressure limit not met	A.1 Establish CANISTER cavity vacuum drying pressure within limit	25 days
B. Required Action and associated Completion Time not met	B.1 Remove all fuel assemblies from the NAC-UMS® or UNITAD SYSTEM, as applicable	5 days

SURVEILLANCE REQUIREMENTS – NAC-UMS® SYSTEM, including the UNITAD SYSTEM.

SURVEILLANCE		FREQUENCY
SR 3.1.2.1	Verify CANISTER cavity vacuum drying pressure is within limits	Prior to TRANSPORT OPERATIONS.

A 3.1 NAC-UMS® SYSTEM Integrity

CANISTER Helium Backfill Pressure

LCO 3.1.3 The CANISTER helium backfill pressure shall be 0 (+1, -0) psig for the NAC-UMS® SYSTEM and 0 (+3, -0) psig for the UNITAD SYSTEM.

APPLICABILITY: During LOADING OPERATIONS for the NAC-UMS® SYSTEM, including the UNITAD SYSTEM.

ACTIONS

----------NOTE----------

Separate Condition entry is allowed for each NAC-UMS® SYSTEM, including the UNITAD SYSTEM.

CONDITION	REQUIRED ACTION	COMPLETION TIME
A. CANISTER helium backfill pressure limit not met	A.1 Establish CANISTER helium backfill pressure within limit	25 days
B. Required Action and associated Completion Time not met	B.1 Remove all fuel assemblies from the NAC-UMS® or UNITAD SYSTEM	5 days

SURVEILLANCE REQUIREMENTS – NAC-UMS® SYSTEM, including the UNITAD SYSTEM.

SURVEILLANCE		FREQUENCY
SR 3.1.3.1	Verify CANISTER helium backfill pressure is within limit	Prior to TRANSPORT OPERATIONS.

A 3.1 NAC-UMS® SYSTEM Integrity

A 3.1.4 CANISTER Maximum Time in TRANSFER CASK

LCO 3.1.4 The total cumulative time a loaded and helium filled CANISTER may remain in the TRANSFER CASK for the NAC-UMS SYSTEM including the UNITAD STORAGE SYSTEM is limited to 600 hours.

For the NAC-UMS SYSTEM (UNITAD STORAGE SYSTEM not included), the following intermediate time limits for loaded and helium filled CANISTER time in TRANSFER CASK, without forced air or in-pool cooling, shall apply between cooling cycles. NAC-UMS SYSTEM CANISTERS with total heat loads below those with intermediate limits are only limited by the 600 cumulative hours.

Total PWR Heat Load (L)(kW)	Time Limit (Hours)
20 < L ≤23	20

Total BWR Heat Load (L)(kW)	Time Limit (Hours)
20 < L ≤23	16
17 < L ≤20	30

APPLICABILITY: During LOADING OPERATIONS, TRANSFER OPERATIONS, and UNLOADING OPERATIONS of the NAC-UMS SYSTEM. (UNITAD STORAGE SYSTEM not included.)

(continued)

CANISTER Maximum Time in TRANSFER CASK
A 3.1.4

ACTIONS

----------NOTE----------

Separate Condition entry is allowed for each NAC-UMS® SYSTEM. (UNITAD STORAGE SYSTEM not incuded.)

CONDITION	REQUIRED ACTION	COMPLETION TIME
A. ----NOTE ----- All time spent in Condition A is part of the 600 hour cumulative limit ---------- Intermediate time limit not met (UNITAD STORAGE SYSTEM not included)	A.1.1 Place TRANSFER CASK with CANISTER in spent fuel pool	2 hours
	AND	
	A.1.2 Maintain TRANSFER CASK and CANISTER in spent fuel pool for a minimum of 24 hours	26 hours
	OR	
	A.2.1 Commence supplying air to the TRANSFER CASK annulus fill/drain lines at a rate of 375 CFM and a maximum temperature of 76°F	2 hours
	AND	
	A.2.2 Maintain airflow for a minimum of 24 hours	26 hours
B. 600 hour cumulative time limit not met (NAC-UMS SYSTEM, including the UNITAD STORAGE SYSTEM)	B.1 Load CANISTER into CONCRETE CASK	5 days
	OR	
	B.2 Load CANISTER into TRANSPORT CASK	5 days
	OR	
	B.3 Remove all fuel assemblies from the NAC-UMS® SYSTEM or the UNITAD STORAGE SYSTEM, as applicable	5 days

(continued)

SURVEILLANCE REQUIREMENTS (UNITAD STORAGE SYSTEM not included.)

SURVEILLANCE		FREQUENCY
SR 3.1.4.1	Monitor elapsed time for compliance with LCO 3.1.4	As required to meet the time limit

A 3.1 NAC-UMS® SYSTEM Integrity

A 3.1.5 CANISTER Helium Leak Rate (Not applicable to the UNITAD STORAGE SYSTEM)

LCO 3.1.5 For the NAC-UMS SYSTEM, there shall be no indication of a helium leak at a test sensitivity of 1×10^{-7} cm^3/sec (helium) through the CANISTER shield lid to CANISTER shell confinement weld for the NAC-UMS SYSTEM to demonstrate a helium leak rate equal to or less than 2×10^{-7} cm^3/sec (helium).

For the UNITAD STORAGE SYSTEM, this helium leak test is not applicable based on the implementation of all design and fabrication requirements of ISG-15 and ISG-18 for the UNITAD SYSTEM CANISTER.

APPLICABILITY: During LOADING OPERATIONS of NAC-UMS SYSTEM only. (Not applicable to the UNITAD STORAGE SYSTEM)

ACTIONS

----------NOTE----------

Separate Condition entry is allowed for each NAC-UMS® SYSTEM. (UNITAD STORAGE SYSTEM not included)

CONDITION	REQUIRED ACTION	COMPLETION TIME
A. CANISTER helium leak rate limit not met	A.1 Establish CANISTER helium leak rate within limit	25 days
B. Required Action and associated Completion Time not met	B.1 Remove all fuel assemblies from the NAC-UMS® SYSTEM	5 days

SURVEILLANCE REQUIREMENTS (UNITAD STORAGE SYSTEM not included)

SURVEILLANCE		FREQUENCY
SR 3.1.5.1	Verify CANISTER helium leak rate is within limit	Once prior to TRANSPORT OPERATIONS.

A 3.1 NAC-UMS® SYSTEM Integrity

A 3.1.6 CONCRETE CASK Heat Removal System

LCO 3.1.6 The CONCRETE CASK Heat Removal System shall be OPERABLE.

APPLICABILITY: During STORAGE OPERATIONS for the NAC-UMS® SYSTEM, including the UNITAD STORAGE SYSTEM.

ACTIONS

----------NOTE----------

Separate Condition entry is allowed for each NAC-UMS® SYSTEM, including the UNITAD STORAGE SYSTEM.

CONDITION	REQUIRED ACTION	COMPLETION TIME
A. LCO not met	A.1 Ensure adequate heat removal to prevent exceeding short-term temperature limits	Immediately
	AND	
	A.2 Verify fuel loading meets CoC approved contents requirements	7 days
	AND	
	A.3 Restore CONCRETE CASK Heat Removal System to OPERABLE status	25 days
B. Required Actions A.1, A.2 or A.3 and associated Completion Times not met	B.1 Perform an engineering evaluation to determine that the CONCRETE CASK Heat Removal System is OPERABLE	5 days
	OR	
	B.2 Place the NAC-UMS SYSTEM or the UNITAD STORAGE SYSTEM in a safe condition	5 days

(continued)

SURVEILLANCE REQUIREMENTS

SURVEILLANCE		FREQUENCY
SR 3.1.6.1	For the NAC-UMS SYSTEM (UNITAD STORAGE SYSTEM not included), verify the difference between the ISFSI ambient temperature and the average outlet air temperature is ≤ 102°F for the PWR canister or ≤ 92°F for the BWR canister.	24 hours
	For the UNITAD STORAGE SYSTEM, verify that the difference between the average CONCRETE CASK air outlet temperature and the ISFSI ambient temperature indicates that the CONCRETE CASK Heat Removal System is operable in accordance with the UNITAD SYSTEM SAR thermal evaluation.	24 hours
	OR	
	For the NAC-UMS SYSTEM, including the UNITAD STORAGE SYSTEM, visually verify all CONCRETE CASK air inlet and outlet screens are unobstructed.	24 hours
SR 3.1.6.2	For the NAC-UMS SYSTEM (UNITAD STORAGE SYSTEM not included), verify the difference between the ISFSI ambient temperature and the average outlet air temperature is ≤ 102°F for the PWR canister or ≤ 92°F for the BWR canister.	Once between 5 and 30 days after STORAGE OPERATIONS begin
	For the UNITAD STORAGE SYSTEM, verify that the difference between the average CONCRETE CASK air outlet temperature and the ISFSI ambient temperature indicates that the CONCRETE CASK Heat Removal System is operable in accordance with the UNITAD SYSTEM SAR thermal evaluation.	

A 3.2 NAC-UMS® SYSTEM Radiation Protection

A 3.2.1 CANISTER Surface Contamination

LCO 3.2.1 Removable contamination on the exterior surfaces of the CANISTER shall not exceed:

a. 10,000 dpm/100 cm^2 from beta and gamma sources for the NAC-UMS SYSTEM or 1,000 dpm/100 cm^2 from beta and gamma sources for the UNITAD SYSTEM; and

b. 100 dpm/100 cm^2 from alpha sources for the NAC-UMS SYSTEM or 20 dpm/100 cm2 from alpha sources for the UNITAD SYSTEM.

APPLICABILITY: During LOADING OPERATIONS for the NAC-UMS STORAGE SYSTEM, including the UNITAD STORAGE SYSTEM.

ACTIONS

----------NOTE----------

Separate Condition entry is allowed for each NAC-UMS® SYSTEM, including the UNITAD STORAGE SYSTEM.

CONDITION	REQUIRED ACTION	COMPLETION TIME
A. CANISTER removable surface contamination limits not met	A.1 Restore CANISTER removable surface contamination to within limits	Prior to TRANSPORT OPERATIONS

(continued)

CANISTER Surface Contamination
A 3.2.1

SURVEILLANCE REQUIREMENTS – NAC-UMS SYSTEM, including the UNITAD STORAGE SYSTEM.

SURVEILLANCE		FREQUENCY
SR 3.2.1.1	Verify by either direct or indirect methods that the removable contamination on the exterior surfaces of the CANISTER is within limits	Once, prior to TRANSPORT OPERATIONS

A 3.2 NAC-UMS® SYSTEM Radiation Protection

A 3.2.2 CONCRETE CASK Average Surface Dose Rates

LCO 3.2.2 The average surface dose rates of each CONCRETE CASK shall not exceed the following limits unless required ACTIONS A.1 and A.2 are met.

a. 50 mrem/hour (neutron + gamma) on the side (on the concrete surfaces) for the NAC-UMS SYSTEM or 30 mrem/hour (neutron + gamma) on the side (on the concrete surfaces) for the UNITAD SYSTEM;

b. 50 mrem/hour (neutron + gamma) on the top for the NAC-UMS SYSTEM or 200 mrem/hour (neutron + gamma) on the top for the UNITAD SYSTEM;

c. 100 mrem/hour (neutron + gamma) at air inlets and outlets for the NAC-UMS SYSTEM or 150 average mrem/hour (neutron + gamma) at air inlets and outlets for the UNITAD SYSTEM.

APPLICABILITY: During STORAGE OPERATIONS for the NAC-UMS SYSTEM, including the UNITAD STORAGE SYSTEM.

ACTIONS

----------NOTE----------

Separate Condition entry is allowed for each NAC-UMS® SYSTEM, including the UNITAD STORAGE SYSTEM.

CONDITION	REQUIRED ACTION	COMPLETION TIME
A. CONCRETE CASK average surface dose rate limits not met	A.1 Administratively verify correct fuel loading AND	24 hours

(continued)

CONDITION	REQUIRED ACTION	COMPLETION TIME
	A.2 Perform analysis to verify compliance with the ISFSI offsite radiation protection requirements of 10 CFR 20 and 10 CFR 72	7 days
B. Required Action and associated Completion Time not met.	B.1 Remove all fuel assemblies from the NAC-UMS® SYSTEM or the UNITAD STORAGE SYSTEM, as applicable	30 days

SURVEILLANCE REQUIREMENTS – NAC-UMS SYSTEM, including the UNITAD STORAGE SYSTEM.

SURVEILLANCE		FREQUENCY
SR 3.2.2.1	Verify average surface dose rates of CONCRETE CASK loaded with a CANISTER containing fuel assemblies are within limits. Dose rates shall be measured at the locations shown in Figure A 3-1 for the NAC-UMS® SYSTEM. Dose rates shall be measured at the locations shown in Figure A 3-2 for the UNITAD STORAGE SYSTEM.	Prior to STORAGE OPERATIONS

Figure A3-1 CONCRETE CASK Surface Dose Rate Measurement for the NAC-UMS® STORAGE SYSTEM (UNITAD STORAGE SYSTEM not included)

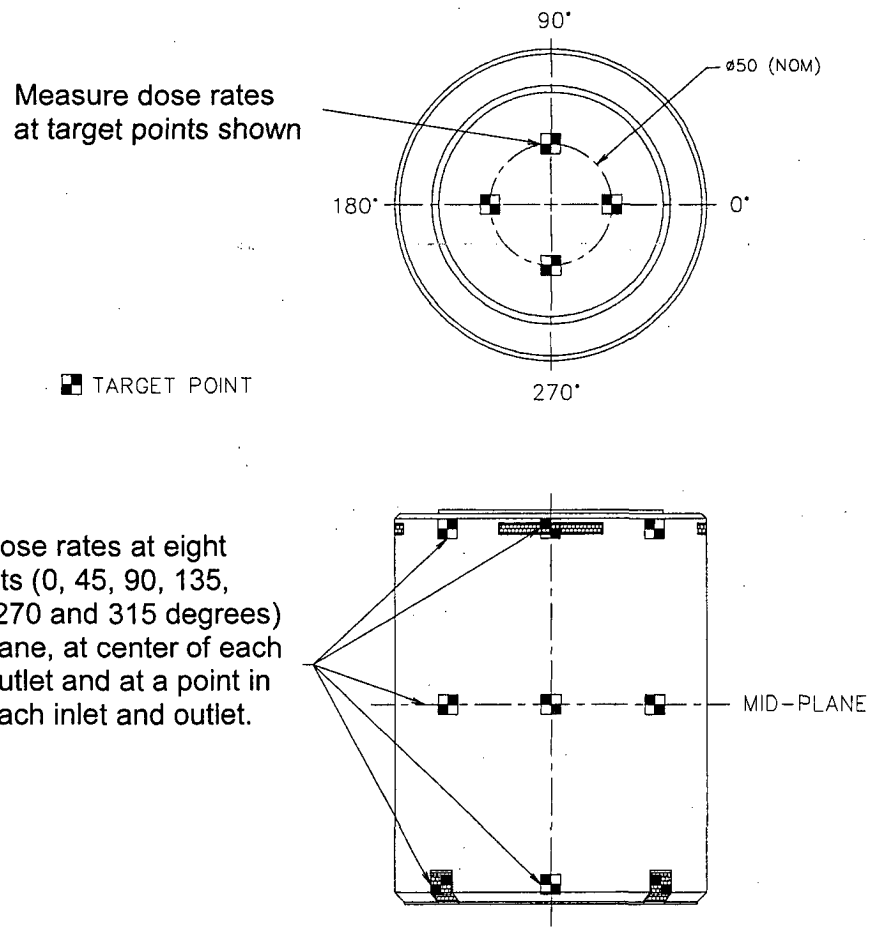

Figure A 3-2 CONCRETE CASK Surface Dose Rate Measurement for UNITAD STORAGE SYSTEM

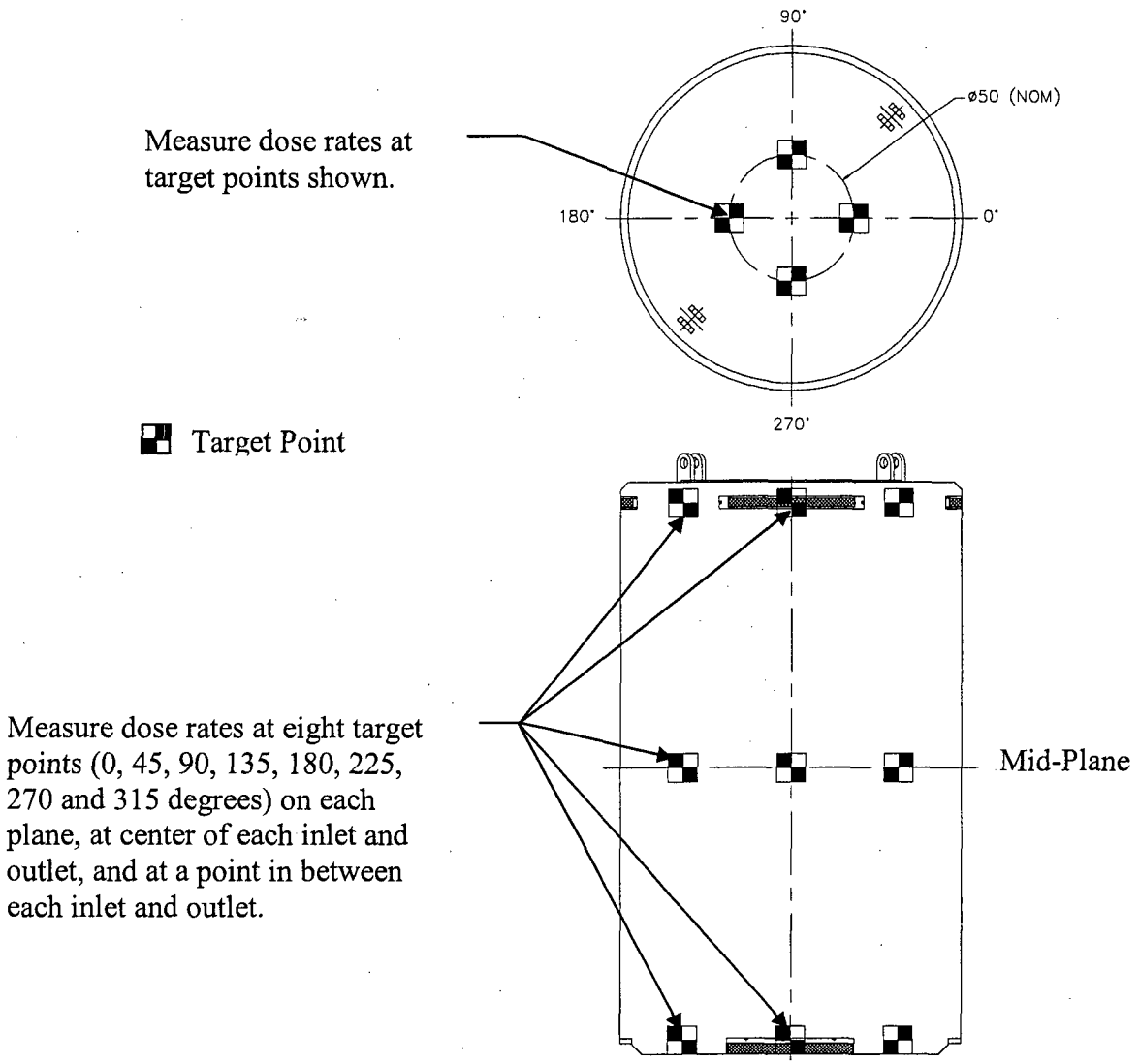

A 3.3 NAC-UMS® SYSTEM Radiation Protection

A 3.3.1 Dissolved Boron Concentration

LCO 3.3.1 The dissolved boron concentration in the water in the CANISTER cavity shall be ≥ 1,000 ppm for the NAC-UMS SYSTEM and ≥ 700 ppm for the UNITAD SYSTEM.

APPLICABILITY: During LOADING OPERATIONS and UNLOADING OPERATIONS of the NAC-UMS SYSTEM with water and at least one fuel assembly in the CANISTER that exceeds the enrichment limits in Table B2-2 for fuel assemblies taking no boron credit, and for all LOADING OPERATIONS and UNLOADING OPERATIONS with water of the UNITAD SYSTEM.

ACTIONS

----------NOTE----------
Separate Condition entry is allowed for each NAC-UMS® SYSTEM, including the UNITAD STORAGE SYSTEM.

CONDITION	REQUIRED ACTION	COMPLETION TIME
A. Dissolved boron concentration not met.	A.1 Suspend loading of fuel assemblies into CANISTER and any other actions that increase reactivity	Immediately
	AND	
	A.2 Initiate action to restore boron concentration to within limit	Immediately
	AND	
	A.3.1 Restore boron concentration to within limit	24 hours
	OR	
	A.3.2 Remove all fuel assemblies that exceed the enrichment limits of Table B 2-2 for fuel assemblies taking no boron credit for the NAC-UMS SYSTEM and all fuel assemblies for the UNITAD STORAGE SYSTEM.	24 hours

SURVEILLANCE REQUIREMENTS – NAC-UMS SYSTEM, including the UNITAD STORAGE SYSTEM.

SURVEILLANCE		FREQUENCY
SR 3.3.1.1	Verify the dissolved boron concentration is met using two independent measurements.	Once within 4 hours prior to commencing LOADING or UNLOADING OPERATIONS. AND Every 48 hours thereafter while the CANISTER is in the spent fuel pool or while water is in the CANISTER, except when no water is being introduced into the CANISTER cavity.

A 4.0 [Reserved]

THIS PAGE INTENTIONALLY LEFT BLANK

A 5.0 ADMINISTRATIVE CONTROLS AND PROGRAMS

A 5.1 Training Program

A training program for the NAC-UMS® SYSTEM, including the UNITAD STORAGE SYSTEM, shall be developed under the general licensee's systematic approach to training (SAT). Training modules shall include comprehensive instructions for the operation and maintenance of the NAC-UMS® SYSTEM, the UNITAD STORAGE SYSTEM, if applicable, and the independent spent fuel storage installation (ISFSI).

A 5.2 Preoperational Testing and Training Exercises

A dry run training exercise on loading, closure, handling, unloading, and transfer of the NAC-UMS® SYSTEM, including the UNITAD STORAGE SYSTEM, shall be conducted by the licensee prior to the first use of the system to load spent fuel assemblies. The training exercise shall not be conducted with spent fuel in the CANISTER. The dry run may be performed in an alternate step sequence from the actual procedures, but all steps must be performed. The dry run shall include, but is not limited to the following:

a. Moving the CONCRETE CASK into its designated loading area
b. Moving the TRANSFER CASK containing the empty CANISTER into the spent fuel pool
c. Loading one or more dummy fuel assemblies into the CANISTER, including independent verification
d. Selection and verification of fuel assemblies requiring preferential loading
e. Installing the shield lid for the NAC-UMS® SYSTEM or the closure lid for the UNITAD STORAGE SYSTEM
f. Removal of the TRANSFER CASK from the spent fuel pool
g. Closing and sealing of the CANISTER to demonstrate pressure testing, vacuum drying, helium backfilling, welding, weld inspection and documentation, and leak testing
h. TRANSFER CASK movement through the designated load path
i. TRANSFER CASK installation on the CONCRETE CASK
j. Transfer of the CANISTER to the CONCRETE CASK

(continued)

A 5.2 Preoperational Testing and Training Exercises (continued)

k. CONCRETE CASK shield plug and lid installation for the NAC-UMS® SYSTEM or the lid assembly installation for the UNITAD STORAGE SYSTEM
l. Transport of the CONCRETE CASK to the ISFSI
m. CANISTER removal from the CONCRETE CASK
n. CANISTER unloading, including reflooding, and weld removal or cutting

Appropriate mockup fixtures may be used to demonstrate and/or to qualify procedures, processes or personnel in welding, weld inspection, vacuum drying, helium backfilling, leak testing and weld removal or cutting.

A 5.3 Special Requirements for the First System Placed in Service

The heat transfer characteristics and performance of the NAC-UMS® SYSTEM (UNITAD STORAGE SYSTEM not included) will be recorded by air inlet and outlet temperature measurements of the first system placed in service with a heat load equal to or greater than 10 kW. A letter report summarizing the results of the measurements will be submitted to the NRC in accordance with 10 CFR 72.4 within 30 days of placing the loaded cask on the ISFSI pad. The report will include a comparison of the calculated temperatures of the NAC-UMS® SYSTEM heat load to the measured temperatures. A report is not required to be submitted for the NAC-UMS® SYSTEMs that are subsequently loaded, provided that the performance of the first system placed in service with a heat load $\geq$ 10 kW is demonstrated by the comparison of the calculated and measured temperatures. This requirement does not apply to the UNITAD STORAGE SYSTEM based on its similarity to the NAC-UMS® SYSTEM.

A 5.4 Surveillance After an Off-Normal, Accident or Natural Phenomena Event

A Response Surveillance is required following off-normal, accident or natural phenomena events. Any NAC-UMS® SYSTEM, including the UNITAD STORAGE SYSTEM, in use at an ISFSI shall be inspected within 4 hours after the occurrence of an off-normal, accident or natural phenomena event in the area of the ISFSI. This inspection must specifically verify that all the CONCRETE CASK inlets and outlets are not blocked or obstructed. At least one-half of the inlets and outlets on each CONCRETE CASK must be cleared of blockage or debris within 24 hours to restore air circulation.

The CONCRETE CASK and CANISTER shall be inspected if they experience a drop or a tip-over.

(continued)

A 5.5 Radioactive Effluent Control Program

The program implements the requirements of 10 CFR 72.126.

a. The NAC-UMS® SYSTEM, including the UNITAD STORAGE SYSTEM, does not create any radioactive materials or have any radioactive waste treatment systems. Therefore, specific operating procedures for the control of radioactive effluents are not required. LCO 3.1.5, CANISTER Helium Leak Rate, provides assurance that there are no radioactive effluents from the NAC-UMS® SYSTEM.

b. This program includes an environmental monitoring program. Each general license user may incorporate NAC-UMS® SYSTEM operations into their environmental monitoring program for 10 CFR Part 50 operations.

A 5.6 NAC-UMS® SYSTEM, Including the UNITAD STORAGE SYSTEM, Transport Evaluation Program

This program provides a means for evaluating various transport configurations and transport route conditions to ensure that the design basis drop limits are met. For lifting of the loaded TRANSFER CASK or CONCRETE CASK using devices that are integral to a structure governed by 10 CFR Part 50 regulations, 10 CFR 50 requirements apply. This program is not applicable when the TRANSFER CASK or CONCRETE CASK is in the fuel building or is being handled by a device providing support from underneath (i.e., on a rail car, heavy haul trailer, air pads, etc.).

Pursuant to 10 CFR 72.212, this program shall evaluate the site specific transport route conditions.

a. The lift height above the transport surface shall not exceed the limits in Table A5-1.

(continued)

A 5.6 NAC-UMS® SYSTEM Transport Evaluation Program (continued)

b. For site-specific transport conditions that are not bounded by Section 11.2.4 of the NAC-UMS® Final Safety Analysis Report, the program may evaluate the site-specific conditions to ensure that the impact loading due to site-specific drop events does not exceed 60g. This alternative analysis shall be commensurate with the drop analyses described in the Final Safety Analysis Report for the NAC-UMS® SYSTEM. The program shall ensure that these alternative analyses are documented and controlled.

c. The TRANSFER CASK and CONCRETE CASK may be lifted to those heights necessary to perform cask handling operations, including CANISTER transfer, provided the lifts are made with structures and components designed in accordance with the criteria specified in Section B3.5 of Appendix B to CoC No. 1015, as applicable.

Table A5-1 TRANSFER CASK and CONCRETE CASK Lifting Requirements (NAC-UMS SYSTEM, including the UNITAD STORAGE SYSTEM)

Item	Orientation	Loaded Cask Lifting Height Limit
TRANSFER CASK	Horizontal	Not Permitted
TRANSFER CASK	Vertical	None Established[1]
CONCRETE CASK	Horizontal	Not Permitted
CONCRETE CASK	Vertical	< 24 inches

Note:

1. See Technical Specification A5.6(c).

THIS PAGE INTENTIONALLY LEFT BLANK

APPENDIX 12.B

APPROVED CONTENTS AND DESIGN FEATURES FOR THE NAC-UMS® SYSTEM

AMENDMENT 6

The Approved Contents and Design Features for the NAC-UMS SYSTEM are incorporated in Appendix B of Certificate of Compliance No. 1015, Amendment 6. The Approved Contents and Design Features presented in this Appendix have been expanded to include the Approved Contents and Design Features for the UNITAD STORAGE SYSTEM.

Appendix 12.B
Table of Contents

B 1.0 [Reserved] 12.B.1-1

B 2.0 Approved Contents 12.B.2-1
B 2.1 Fuel Specifications and Loading Conditions 12.B.2-1

Figure B 2-1 PWR Basket Fuel Loading Positions and Minimum Flux Trap Definition (Not applicable to UNITAD STORAGE SYSTEM) 12.B.2-4
Figure B 2-2 BWR Basket Fuel Loading Positions and Minimum Flux Trap Definition (Not applicable to UNITAD STORAGE SYSTEM) 12.B.2-5
Table B 2-1 Fuel Assembly Limits 12.B.2-6
Table B 2-2 PWR Fuel Assembly Characteristics (Not applicable to UNITAD STORAGE SYSTEM) 12.B.2-9
Table B 2-3 BWR Fuel Assembly Characteristics (Not applicable to UNITAD (STORAGE SYSTEM) 12.B.2-10
Table B 2-4 Minimum Cooling Time Versus Burnup/Initial Enrichment for PWR Fuel (Not applicable to UNITAD STORAGE SYSTEM) 12.B.2-11
Table B 2-5 Minimum Cooling Time Versus Burnup/Initial Enrichment for BWR Fuel (Not applicable to UNITAD STORAGE SYSTEM) 12.B.2-13
Table B 2-6 Maine Yankee Site Specific Fuel Canister Loading Position Summary (Not applicable to UNITAD STORAGE SYSTEM) 12.B.2-14
Table B 2-7 Maine Yankee Site Specific Fuel Limits (Not applicable to UNITAD STORAGE SYSTEM) 12.B.2-15
Table B 2-8 Loading Table for Maine Yankee CE 14 × 14 Fuel with No Nonfuel Material –Required Cool Time in Years Before Assembly is Acceptable (Not applicable to UNITAD STORAGE SYSTEM) 12.B.2-17
Table B 2-9 Loading Table for Maine Yankee CE 14 × 14 Fuel Containing CEA Cooled to Indicated Time (Not applicable to UNITAD STORAGE SYSTEM) 12.B.2-19
Table B 2-10 PWR Fuel Assembly Characteristics for the UNITAD STORAGE SYSTEM . 12.B.2-20
Table B 2-11 Low Burnup Fuel – Minimum Fuel Assembly Enrichment (5-Year Cool Time) for the UNITAD STORAGE SYSTEM 12.B.2-22
Table B 2-12 Loading Table fro P WR Fuel for the UNITAD STORAGE SYSTEM – 22 kW/Cask 12.B.2-23
Table B 2-13 Additional Cool Time Required for Loading Nonfuel Components for the UNITAD STORAGE SYSTEM 12.B.2-24

B 3.0 Design Features 12.B.3-1
B 3.1 Site 12.B.3-1
B 3.2 Design Features Important for Criticality Control 12.B.3-1
B 3.3 Codes and Standards 12.B.3-2
B 3.4 Site Specific Parameters and Analyses 12.B.3-7

Appendix 12.B
Table of Contents (continued)

B 3.5 CANISTER HANDLING FACILITY (CHF) 12.B.3-11

Table B 3-1 List of ASME Code Alternatives for the NAC-UMS® SYSTEM 12.B.3-3
Table B 3-2 Load Combinations and Service Condition Definitions for the CANISTER HANDLING FACILITY (CHF) Structure 12.B.3-13

B 1.0 [Reserved]

THIS PAGE INTENTIONALLY LEFT BLANK

B 2.0 APPROVED CONTENTS

B 2.1 Fuel Specifications and Loading Conditions

The NAC-UMS® SYSTEM is designed to provide passive dry storage of canistered PWR and BWR spent fuel and the UNITAD SYSTEM for PWR spent fuel. The systems require few operating controls. The principal controls and limits for the NAC-UMS® SYSTEM and the UNITAD STORAGE SYSTEM are satisfied by the selection of fuel for storage that meets the Approved Contents design basis spent fuels presented in this section and in Tables B 2-1; and Tables B 2-2 through B 2-5 (not applicable to the UNITAD STORAGE SYSTEM) for the standard NAC-UMS® SYSTEM; in Tables B 2-6 through B 2-9 for Maine Yankee SITE SPECIFIC FUEL; and in Tables B 2-1, B 2-10 and B 2-11 for the UNITAD STORAGE SYSTEM.

For the NAC-UMS SYSTEM (UNITAD STORAGE SYSTEM not included) this section also permits the loading of fuel assemblies that are unique to specific reactor sites. SITE SPECIFIC FUEL assembly configurations are either shown to be bounded by the analysis of the standard NAC-UMS® SYSTEM design basis fuel assembly configuration of the same type (PWR or BWR), or are shown to be acceptable contents by specific evaluation of the configuration.

The separate specific evaluation may establish different limits, which are maintained by administrative controls for preferential loading. The preferential loading controls allow the loading of unique configurations as compared to the standard NAC-UMS® SYSTEM design basis spent fuels.

Unless specifically excepted, SITE SPECIFIC FUEL must meet all of the controls and limits specified for the NAC-UMS® SYSTEM (UNITAD STORAGE SYSTEM not included).

If any Fuel Specification or Loading Conditions of this section are violated, the following actions shall be completed:

- The affected fuel assemblies shall be placed in a safe condition.
- Within 24 hours, notify the NRC Operations Center.
- Within 60 days, submit a special report in accordance with the applicable requirements of 10 CFR 72.75 (g).

(continued)

B 2.1.1 Fuel to be Stored in the NAC-UMS® SYSTEM and the UNITAD SYSTEM

UNDAMAGED FUEL ASSEMBLIES meeting the limits specified in Tables B 2-1, and Tables B 2-2 through B 2-5 (not applicable to the UNITAD STORAGE SYSTEM) may be stored in the NAC-UMS® SYSTEM. UNDAMAGED FUEL ASSEMBLIES meeting the limits specified in Tables B 2-1, B 2-10 and B 2-11 may be stored in the UNITAD STORAGE SYSTEM.

B 2.1.2 Maine Yankee SITE SPECIFIC FUEL Preferential Loading in the NAC-UMS SYSTEM (Not applicable to the UNITAD STORAGE SYSTEM)

The estimated Maine Yankee SITE SPECIFIC FUEL inventory is shown in Table B 2-6. As shown in this table, certain of the Maine Yankee fuel configurations must be preferentially loaded in specific basket fuel tube positions.

Corner positions are used for CONSOLIDATED FUEL, certain HIGH BURNUP FUEL and DAMAGED FUEL or FUEL DEBRIS loaded in a MAINE YANKEE FUEL CAN, for fuel assemblies with missing fuel rods, burnable poison rods or fuel assemblies with fuel rods that have been replaced by hollow zirconium alloy rods. Designation for placement in corner positions results primarily from shielding or criticality evaluations of these fuel configurations. CONSOLIDATED FUEL is conservatively designated for a corner position, even though analysis shows that these lattices could be loaded in any basket position. Corner positions are positions 3, 6, 19, and 22 in Figure B 2-1.

Preferential loading is also used for HIGH BURNUP fuel not loaded in the MAINE YANKEE FUEL CAN. This fuel is assigned to peripheral locations, positions 1, 2, 3, 6, 7, 12, 13, 18, 19, 22, 23, and 24 in Figure B2-1. The interior locations, positions 4, 5, 8, 9, 10, 11, 14, 15, 16, 17, 20, and 21, must be loaded with fuel that has lower burnup and/or longer cool times to maintain the design basis heat load (23 kW per canister).

One of the two loading patterns (Standard or Preferential) shown in Table B 2-8 must be used to load each canister. For the Standard loading pattern, the heat load of each fuel assembly is limited to 0.958 kW. For the Preferential loading pattern, the heat load of the fuel assemblies at the basket periphery locations is limited to 1.05 kW, and the heat load of the fuel assemblies at the basket interior locations is limited to 0.867 kW. Once selected, all of the spent fuel in that canister must be loaded in accordance with that pattern. Within a pattern, mixing of enrichment and cool time is allowed, but no mixing of loading patterns is permitted. Choosing a Preferential pattern restricts the interior fuel to the cool times shown in the Preferential (I) column, and the peripheral fuel to the cool times shown in the Preferential (P) column.

(continued)

B 2.1.2 Maine Yankee SITE SPECIFIC FUEL Preferential Loading in the NAC-UMS SYSTEM (Not applicable to the UNITAD STORAGE SYSTEM) (continued)

Fuel assemblies with a control element assembly (CEA) inserted will be loaded in a Class 2 canister and basket due to the increased length of the assembly with the CEA installed. However, these assemblies are not restricted as to loading position within the basket. Fuel assemblies with non-fuel items installed in corner guide tubes of the fuel assembly must also have a flow mixer installed and must be loaded in a basket corner fuel position in a Class 2 canister.

The Transportable Storage Canister loading procedures indicate that loading of a fuel configuration with removed fuel or poison rods, CONSOLIDATED FUEL, or a MAINE YANKEE FUEL CAN with DAMAGED FUEL, FUEL DEBRIS or HIGH BURNUP FUEL, is administratively controlled in accordance with Section B 2.1.

Figure B 2-1 PWR Basket Fuel Loading Positions and Minimum Flux Trap Definition (Not applicable to UNITAD STORAGE SYSTEM)

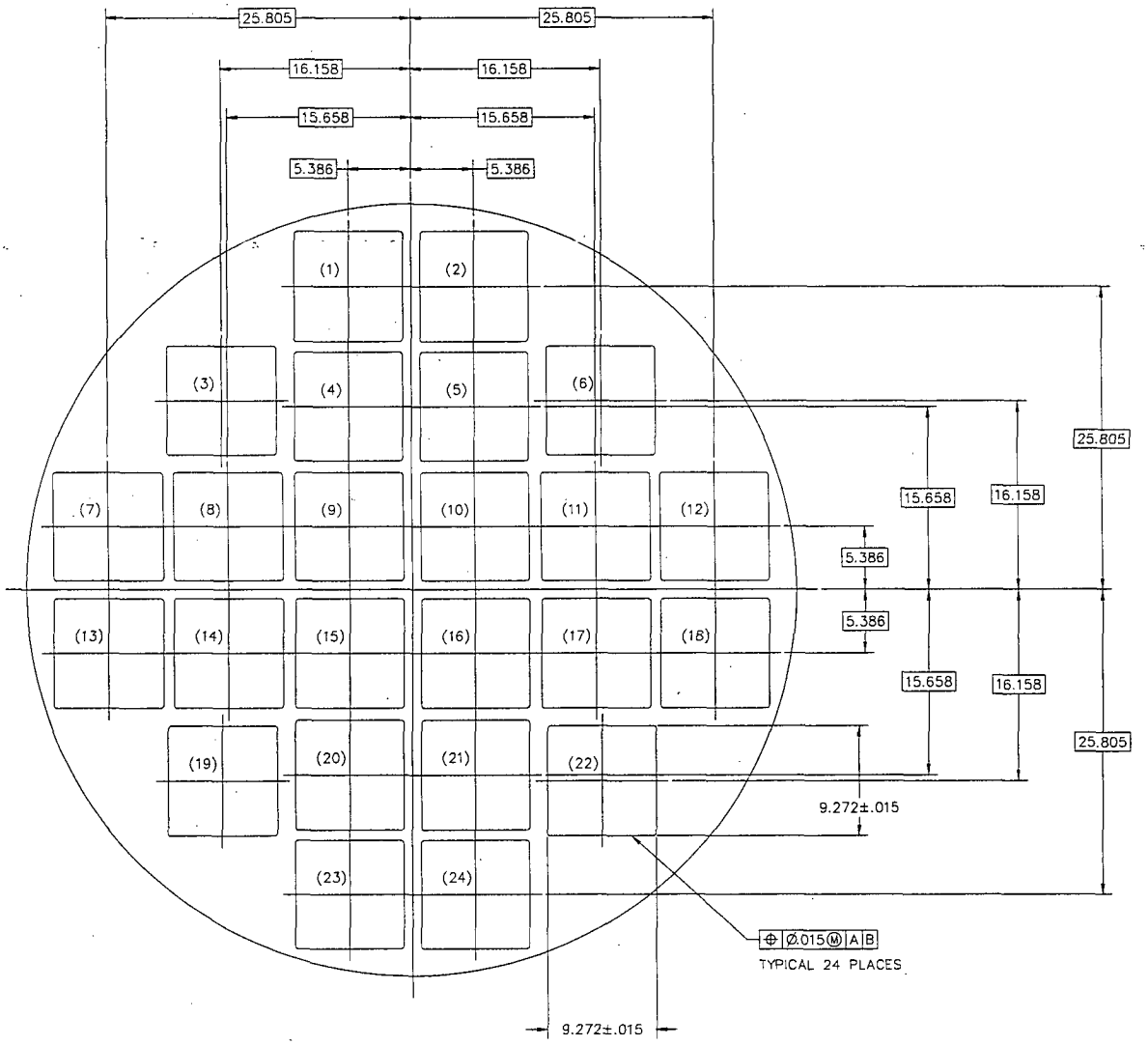

Note: Variations in the dimensions due to fabrication error are permitted provided the minimum flux trap thickness specified in this figure is maintained and no more than two affected (out-of-tolerance) disk openings are adjacent to each other.

Figure B 2-2 BWR Basket Fuel Loading Positions and Minimum Flux Trap Definition (Not applicable to UNITAD STORAGE SYSTEM)

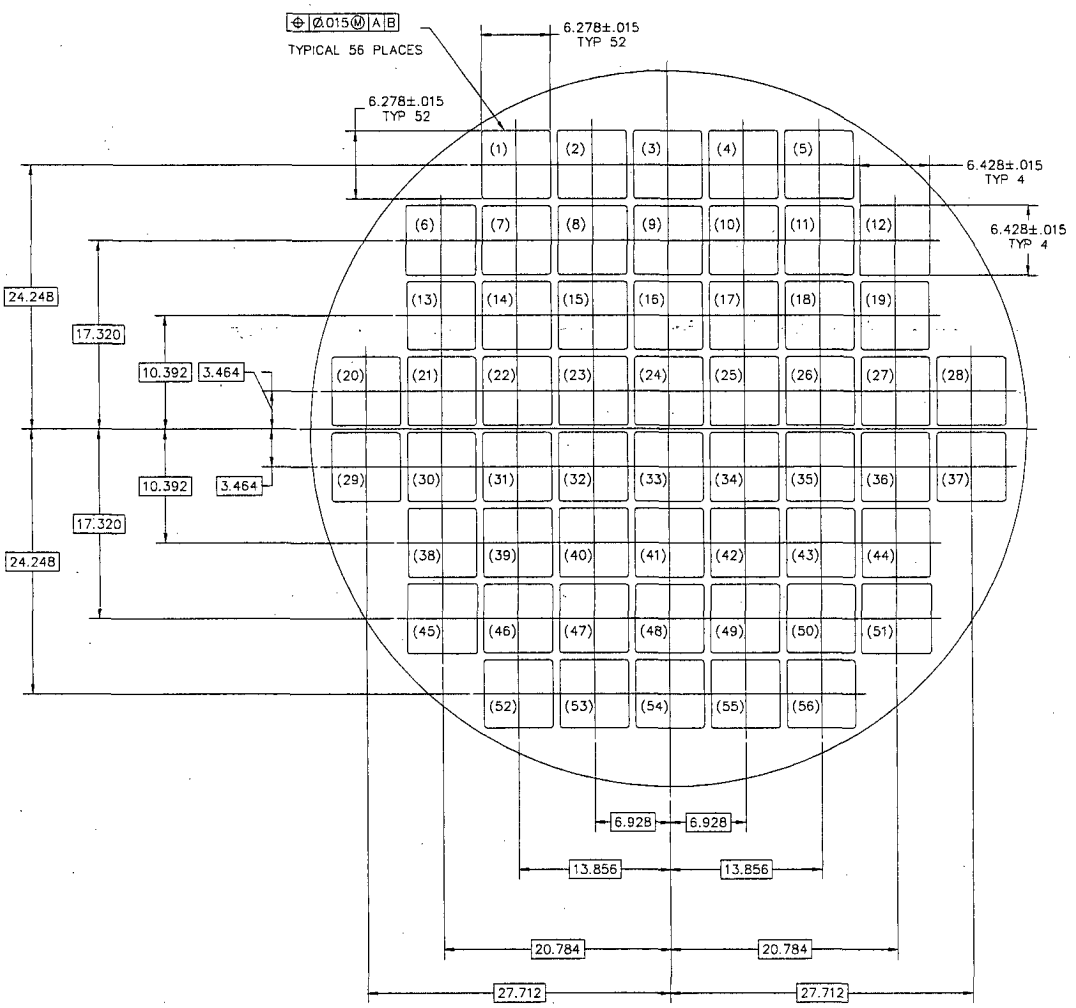

Note: Variations in the dimensions due to fabrication error are permitted provided the minimum flux trap thickness specified in this figure is maintained and no more than two affected (out-of-tolerance) disk openings are adjacent to each other.

Table B 2-1
Fuel Assembly Limits

I. NAC-UMS® CANISTER: PWR FUEL

A. Allowable Contents

1. Uranium oxide PWR UNDAMAGED FUEL ASSEMBLIES listed in Table B 2-2 for the NAC-UMS®SYSTEM or in Table B 2-10 for the UNITAD STORAGE SYSTEM and meeting the following specifications:

a. Cladding Type:	Zirconium alloy with thickness as specified in Table B 2-2 (NAC-UMS SYSTEM) or Table B 2-10 (UNITAD STORAGE SYSTEM) for the applicable fuel assembly class.
b. Enrichment, Post-irradiation Cooling Time and Average Burnup Per Assembly:	Maximum enrichment limits are shown in Table B 2-2(NAC-UMS SYSTEM) or Table B 2-10 (UNITAD STORAGE SYSTEM). For variable enrichment fuel assemblies, maximum enrichments represent peak rod enrichments. Combined minimum enrichment, maximum burnup and minimum cool time limits are shown in Table B 2-4 (NAC-UMS SYSTEM) or Tables B 2-11 and B 2-12 (UNITAD STORAGE SYSTEM).
c. Assembly Average Burnup:	Value calculated by averaging the burnup over the entire fuel region (UO_2) of an individual fuel assembly. The maximum assembly average burnup is 60,000 MWd/MTU (NAC-UMS SYSTEM) or 45,000 MWd/MTU (UNITAD STORAGE SYSTEM).
d. Peak Average Rod Burnup:	Value calculated by averaging the burnup in a rod over the length of the rod, then using the highest burnup calculated for any rod as the peak average rod burnup. The maximum peak average rod burnup is 62,500 MWd/MTU (NAC-UMS SYSTEM; not applicable to the UNITAD STORAGE SYSTEM).
e. Decay Heat Per Assembly:	$\leq$ 958.3 watts † (NAC-UMS SYSTEM) $\leq$ 857 watts (UNITAD STORAGE SYSTEM)
f. Nom. Fresh Fuel Assy Lgth (in.):	$\leq$ 178.3
g. Nom. Fresh Fuel Assy Width (in.):	$\leq$ 8.54
h. Fuel Assembly Weight (lbs.):	$\leq$ 1,602 ‡ (NAC-UMS SYSTEM) $\leq$ 1,700 ‡ (UNITAD STORAGE SYSTEM)

† Decay heat may be higher for site-specific configurations. A site-specific maximum decay heat of 1.05 kW is specified in Section B 2.1.2.

‡ Includes the weight of nonfuel-bearing components.

Table B2-1
Fuel Assembly Limits (continued)

B. Quantity per CANISTER:

Up to 24 UNDAMAGED PWR FUEL ASSEMBLIES (NAC-UMS SYSTEM)

Up to 21 UNDAMAGED PWR FUEL ASSEMBLIES (UNITAD STORAGE SYSTEM).

C. PWR UNDAMAGED FUEL ASSEMBLIES may contain a flow mixer (thimble plug), an in-core instrument thimble, a burnable poison rod insert (Class 1 and Class 2 contents) consistent with Tables B 2-2 or B 2-10, or solid stainless steel rods (inserted in the guide tubes). For the UNITAD SYSTEM, additional cool time is required for assemblies into which hardware is stored, as shown in Table B 2-13.

D. PWR UNDAMAGED FUEL ASSEMBLIES shall not contain a control element assembly, except as permitted for SITE-SPECIFIC FUEL, in the NAC-UMS SYSTEM.

UNDAMAGED PWR FUEL ASSEMBLIES may contain a control element assembly in the UNITAD STORAGE SYSTEM. The UNITAD SYSTEM can load 9 CEAs in the center slot with 180 GWd/MTU exposure and a 10-year cool time.

E. Stainless steel spacers may be used in CANISTERS to axially position PWR UNDAMAGED FUEL ASSEMBLIES that are shorter than the available cavity length to facilitate handling.

F. Unenriched fuel assemblies are not authorized for loading.

G. The minimum length of the PWR UNDAMAGED FUEL ASSEMBLY internal structure and bottom end fitting and/or spacers shall ensure that the minimum distance to the fuel region from the base of the CANISTER is 3.2 inches.

H. PWR UNDAMAGED FUEL ASSEMBLIES with one or more grid spacers missing or damaged such that the unsupported length of the fuel rods does not exceed 60 inches. End fitting damage including damaged or missing hold-down springs is allowed, as long as the assembly can be handled safely by normal means. (Not applicable to UNITAD STORAGE SYSTEM.)

I. PWR UNDAMAGED FUEL ASSEMBLIES not containing the nominal number of fuel rods specified in Tables B 2-2 or B 2-10 must contain solid filler rods that displace a volume equal to, or greater than, that of the fuel rod that the filler rod replaces. SITE-SPECIFIC FUEL may contain missing fuel rods or hollow rods without replacement by solid filler rods provided the loading restrictions listed in Table B 2-7 are met (Not applicable to UNITAD STORAGE SYSTEM).

J.

II. NAC-UMS® CANISTER: BWR FUEL (not applicable to UNITAD STORAGE SYSTEM)

A. Allowable Contents

1. Uranium oxide BWR UNDAMAGED FUEL ASSEMBLIES listed in Table B 2-3 and meeting the following specifications:

a. Cladding Type: Zirconium alloy with thickness as specified in Table B 2-3 for the applicable fuel assembly class.

Table B2-1
Fuel Assembly Limits (continued)

b. Enrichment:	Maximum INITIAL PEAK PLANAR-AVERAGE ENRICHMENTS are shown in Table B 2-3. Combined minimum enrichment, maximum burnup and minimum cool time limits are shown in Table B 2-5.
c. Decay Heat per Assembly:	≤ 410.7 watts
d. Post-irradiation Cooling Time and Average Burnup Per Assembly:	As specified in Table B 2-5 and for the applicable fuel assembly class.
e. Nominal Fresh Fuel Design Assembly Length (in.):	≤ 176.1
f. Nominal Fresh Fuel Design Assembly Width (in.):	≤ 5.51
g. Fuel Assembly Weight (lbs):	≤ 702, including channels

B. Quantity per CANISTER: Up to 56 BWR UNDAMAGED FUEL ASSEMBLIES

C. BWR UNDAMAGED FUEL ASSEMBLIES can be unchanneled or channeled with zirconium alloy channels.

D. BWR UNDAMAGED FUEL ASSEMBLIES with stainless steel channels shall not be loaded.

E. Stainless steel fuel spacers may be used in CANISTERS to axially position BWR UNDAMAGED FUEL ASSEMBLIES that are shorter than the available cavity length to facilitate handling.

F. Unenriched fuel assemblies are not authorized for loading.

G. The minimum length of the BWR UNDAMAGED FUEL ASSEMBLY internal structure and bottom end fitting and/or spacers shall ensure that the minimum distance to the fuel region from the base of the CANISTER is 6.2 inches.

H. BWR UNDAMAGED FUEL ASSEMBLIES not containing the nominal number of fuel rods specified in Table B 2-3 must contain solid filler rods that displace a volume equal to, or greater than, that of the fuel rod that the filler rod replaces.

Table B 2-2 PWR Fuel Assembly Characteristics (Not applicable to UNITAD STORAGE SYSTEM)

Fuel Class	Vendor[1]	Array	Max. MTU	W/O Boron Max. wt % ^{235}U[3]	With Boron Max. wt % ^{235}U[4]	No. of Fuel Rods	No. of Water Holes	Max. Pitch (in)	Min. Rod Dia. (in)	Min. Clad Thick (in)	Max. Pellet Dia.(in)	Max. Active Length (in)	Min. Guide Tube Thick (in)
1	CE	14×14	0.404	4.7	5.0	176	5	0.590	0.438	0.024	0.380	137.0	0.034
1	Ex/ANF	14×14	0.369	5.0	5.0	179	17	0.556	0.424	0.030	0.351	142.0	0.034
1	WE	14×14	0.362	5.0	5.0	179	17	0.556	0.400	0.024	0.345	144.0	0.034
1	WE	14×14	0.415	5.0	5.0	179	17	0.556	0.422	0.022	0.368	145.2	0.034
1	WE, Ex/ANF	15×15	0.465	4.4	5.0	204	21	0.563	0.422	0.024	0.366	144.0	0.015
1	Ex/ANF	17×17	0.413	4.4	5.0	264	25	0.496	0.360	0.025	0.303	144.0	0.016
1	WE	17×17	0.468	4.5	5.0	264	25	0.496	0.374	0.022	0.323	144.0	0.015
1	WE	17×17	0.429	4.3	5.0	264	25	0.496	0.360	0.022	0.309	144.0	0.015
2	B&W	15×15	0.481	4.4	5.0	208	17	0.568	0.430	0.026	0.369	144.0	0.016
2	B&W	17×17	0.466	4.4	5.0	264	25	0.502	0.379	0.024	0.324	143.0	0.017
3	CE	16×16	0.442	4.8	5.0	236	5	0.506	0.382	0.023	0.3255	150.0	0.035
1	Ex/ANF[2]	14×14	0.375	5.0	- -	179	17	0.556	0.417	0.030	0.351	144.0	0.036
1	CE[2]	15×15	0.432	4.2	- -	216	9[5]	0.550	0.418	0.026	0.358	132.0	----
1	Ex/ANF[2]	15×15	0.431	4.2	- -	216	9[5]	0.550	0.417	0.030	0.358	131.8	----
1	CE[2]	16×16	0.403	4.8	- -	236	5	0.506	0.382	0.023	0.3255	136.7	0.035

Note: Parameters shown are nominal pre-irradiation values.

1. Vendor ID indicates the source of assembly base parameters, which are nominal, pre-irradiation values. Loading of assemblies meeting above limits is not restricted to the vendor(s) listed.
2. 14×14, 15×15 and 16×16 fuel manufactured for Prairie Island, Palisades and St. Lucie 2 cores, respectively. These are not generic fuel assemblies provided to multiple reactors.
3. Maximum initial enrichment without boron credit. Assemblies meeting this limit may contain a flow mixer (thimble plug), an ICI thimble, a burnable poison rod insert, or solid stainless steel rods (inserted in guide tubes).
4. Maximum initial enrichment with credit for a minimum soluble boron concentration of 1,000 ppm in the spent fuel pool water. Assemblies meeting this limit may contain a flow mixer (thimble plug).
5. Nine nonfuel locations, which may be filled by solid nonfuel rods.

Table B 2-3 BWR Fuel Assembly Characteristics (Not applicable to UNITAD STORAGE SYSTEM)

Fuel Class[1]	Vendor[4]	Array	Max. MTU	Max. wt % ^{235}U	No. of Fuel Rods	Max. Pitch (in)	Min. Rod Dia. (in)	Min. Clad Thick (in)	Max. Pellet Dia.(in)	Max. Active Length (in)[2]
4	Ex/ANF	7 × 7	0.196	4.5	48	0.738	0.570	0.036	0.490	144.0
4	Ex/ANF	8 × 8	0.177	4.7	63	0.641	0.484	0.036	0.405	145.2
4	Ex/ANF	9 × 9	0.173	4.4	79	0.572	0.424	0.030	0.357	145.2
4	GE	7 × 7	0.199	4.5	49	0.738	0.570	0.036	0.488	144.0
4	GE	7 × 7	0.198	4.5	49	0.738	0.563	0.032	0.487	144.0
4	GE	8 × 8	0.173	4.5	60	0.640	0.484	0.032	0.410	145.2
4	GE	8 × 8	0.179	4.5	62	0.640	0.483	0.032	0.410	145.2
4	GE	8 × 8	0.186	4.7	63	0.640	0.493	0.034	0.416	144.0
5	Ex/ANF	8 × 8	0.180	4.6	62	0.641	0.484	0.036	0.405	150.0
5	Ex/ANF	9 × 9	0.167	4.4	74[3]	0.572	0.424	0.030	0.357	150.0
5	Ex/ANF	9 × 9	0.178	4.5	79[3]	0.572	0.424	0.030	0.357	150.0
5	GE	7 × 7	0.193	4.7	49	0.738	0.563	0.037	0.477	146.0
5	GE	7 × 7	0.198	4.5	49	0.738	0.563	0.032	0.487	144.0
5	GE	8 × 8	0.179	4.5	60	0.640	0.484	0.032	0.410	150.0
5	GE	8 × 8	0.185	4.5	62	0.640	0.483	0.032	0.410	150.0
5	GE	8 × 8	0.188	4.7	63	0.640	0.493	0.034	0.416	146.0
5	GE	9 × 9	0.186	4.5	74[3]	0.566	0.441	0.028	0.376	150.0
5	GE	9 × 9	0.198	4.6	79[3]	0.566	0.441	0.028	0.376	150.0

Note: Parameters shown are nominal pre-irradiation values.

1. All fuel rods are zirconium alloy clad.
2. 150-inch active fuel length assemblies contain 6" natural uranium blankets on top and bottom.
3. Shortened active fuel length in some rods.
4. Vendor ID indicates the source of assembly base parameters, which are nominal, pre-irradiation values. Loading of assemblies meeting above limits is not restricted to the vendor(s) listed.

Table B 2-4 Minimum Cooling Time Versus Burnup/Initial Enrichment for PWR Fuel (Not applicable to UNITAD STORAGE SYSTEM)

Minimum Initial Enrichment wt % ^{235}U (E)	Assembly Average Burnup ≤30 GWd/MTU Minimum Cooling Time [years]				30< Assembly Average Burnup ≤35 GWd/MTU Minimum Cooling Time [years]			
	14×14	15×15	16×16	17×17	14×14	15×15	16×16	17×17
1.9 ≤ E < 2.1	5	5	5	5	7	7	5	7
2.1 ≤ E < 2.3	5	5	5	5	7	6	5	6
2.3 ≤ E < 2.5	5	5	5	5	6	6	5	6
2.5 ≤ E < 2.7	5	5	5	5	6	6	5	6
2.7 ≤ E < 2.9	5	5	5	5	6	5	5	5
2.9 ≤ E < 3.1	5	5	5	5	5	5	5	5
3.1 ≤ E < 3.3	5	5	5	5	5	5	5	5
3.3 ≤ E < 3.5	5	5	5	5	5	5	5	5
3.5 ≤ E < 3.7	5	5	5	5	5	5	5	5
3.7 ≤ E < 3.9	5	5	5	5	5	5	5	5
3.9 ≤ E < 4.1	5	5	5	5	5	5	5	5
4.1 ≤ E < 4.3	5	5	5	5	5	5	5	5
4.3 ≤ E < 4.5	5	5	5	5	5	5	5	5
4.5 ≤ E < 4.7	5	5	5	5	5	5	5	5
4.7 ≤ E < 4.9	5	5	5	5	5	5	5	5
E ≥ 4.9	5	5	5	5	5	5	5	5
Minimum Initial Enrichment wt % ^{235}U (E)	**35< Assembly Average Burnup ≤40 GWd/MTU Minimum Cooling Time [years]**				**40< Assembly Average Burnup ≤45 GWd/MTU Minimum Cooling Time [years]**			
	14×14	15×15	16×16	17×17	14×14	15×15	16×16	17×17
1.9 ≤ E < 2.1	10	10	7	10	15	15	11	15
2.1 ≤ E < 2.3	9	9	6	9	14	13	9	13
2.3 ≤ E < 2.5	8	8	6	8	12	12	8	12
2.5 ≤ E < 2.7	8	7	6	7	11	11	7	11
2.7 ≤ E < 2.9	7	7	6	7	10	10	7	10
2.9 ≤ E < 3.1	7	6	6	7	9	9	7	9
3.1 ≤ E < 3.3	6	6	6	6	9	8	7	8
3.3 ≤ E < 3.5	6	6	6	6	8	8	7	8
3.5 ≤ E < 3.7	6	6	6	6	7	8	7	7
3.7 ≤ E < 3.9	6	6	6	6	7	8	7	7
3.9 ≤ E < 4.1	6	6	6	6	7	7	7	7
4.1 ≤ E < 4.3	5	6	6	6	6	7	7	7
4.3 ≤ E < 4.5	5	6	6	6	6	7	7	7
4.5 ≤ E < 4.7	5	6	5	6	6	7	6	7
4.7 ≤ E < 4.9	5	6	5	6	6	7	6	7
E ≥ 4.9	5	6	5	6	6	7	6	7

Table B 2-4 Minimum Cooling Time Versus Burnup/Initial Enrichment for PWR Fuel (Not applicable to UNITAD STORAGE SYSTEM) (continued)

Minimum Initial Enrichment	45< Assembly Average Burnup ≤50 GWd/MTU Minimum Cooling Time [years]				50< Assembly Average Burnup ≤55 GWd/MTU Minimum Cooling Time [years]			
wt % ^{235}U (E)	14×14	15×15	16×16	17×17	14×14	15×15	16×16	17×17
1.9 ≤ E < 2.1	21	21	18	21	27	27	25	27
2.1 ≤ E < 2.3	19	19	16	19	25	25	23	25
2.3 ≤ E < 2.5	17	17	14	17	23	24	21	24
2.5 ≤ E < 2.7	16	16	12	16	21	22	19	22
2.7 ≤ E < 2.9	14	14	11	14	20	20	17	20
2.9 ≤ E < 3.1	13	13	9	13	18	18	15	18
3.1 ≤ E < 3.3	12	12	9	12	17	17	13	17
3.3 ≤ E < 3.5	11	11	9	11	15	15	12	15
3.5 ≤ E < 3.7	10	10	8	10	14	14	11	14
3.7 ≤ E < 3.9	9	10	8	9	13	13	11	13
3.9 ≤ E < 4.1	9	10	8	9	12	13	11	12
4.1 ≤ E < 4.3	8	10	8	9	11	13	10	12
4.3 ≤ E < 4.5	8	9	8	9	10	13	10	12
4.5 ≤ E < 4.7	7	9	8	9	10	12	10	12
4.7 ≤ E < 4.9	7	9	8	9	9	12	10	12
E ≥ 4.9	7	9	8	9	9	12	10	11
Minimum Initial Enrichment	**55< Assembly Average Burnup ≤60 GWd/MTU Minimum Cooling Time [years]**							
wt % ^{235}U (E)	**14×14**	**15×15**	**16×16**	**17×17**				
1.9 ≤ E < 2.1	33	34	32	34				
2.1 ≤ E < 2.3	31	32	30	32				
2.3 ≤ E < 2.5	29	30	28	30				
2.5 ≤ E < 2.7	28	28	26	28				
2.7 ≤ E < 2.9	26	26	24	26				
2.9 ≤ E < 3.1	24	24	22	24				
3.1 ≤ E < 3.3	22	23	20	23				
3.3 ≤ E < 3.5	21	21	18	21				
3.5 ≤ E < 3.7	19	19	17	20				
3.7 ≤ E < 3.9	18	18	15	18				
3.9 ≤ E < 4.1	17	18	14	17				
4.1 ≤ E < 4.3	15	17	14	16				
4.3 ≤ E < 4.5	14	17	14	16				
4.5 ≤ E < 4.7	13	17	14	16				
4.7 ≤ E < 4.9	12	17	13	16				
E ≥ 4.9	12	16	13	15				

Table B 2-5 Minimum Cooling Time Versus Burnup/Initial Enrichment for BWR Fuel

(No t applicable to UNITAD STORAGE SYSTEM)

Minimum Initial Enrichment wt % ^{235}U (E)	Assembly Average Burnup ≤30 GWd/MTU Minimum Cooling Time [years]			30< Assembly Average Burnup ≤35 GWd/MTU Minimum Cooling Time [years]		
	7×7	8×8	9×9	7×7	8×8	9×9
1.9 ≤ E < 2.1	5	5	5	8	7	7
2.1 ≤ E < 2.3	5	5	5	6	6	6
2.3 ≤ E < 2.5	5	5	5	6	5	6
2.5 ≤ E < 2.7	5	5	5	5	5	5
2.7 ≤ E < 2.9	5	5	5	5	5	5
2.9 ≤ E < 3.1	5	5	5	5	5	5
3.1 ≤ E < 3.3	5	5	5	5	5	5
3.3 ≤ E < 3.5	5	5	5	5	5	5
3.5 ≤ E < 3.7	5	5	5	5	5	5
3.7 ≤ E < 3.9	5	5	5	5	5	5
3.9 ≤ E < 4.1	5	5	5	5	5	5
4.1 ≤ E < 4.3	5	5	5	5	5	5
4.3 ≤ E < 4.5	5	5	5	5	5	5
4.5 ≤ E ≤ 4.7	5	5	5	5	5	5

Minimum Initial Enrichment wt % ^{235}U (E)	35< Assembly Average Burnup ≤40 GWd/MTU Minimum Cooling Time [years]			40< Assembly Average Burnup ≤45 GWd/MTU Minimum Cooling Time [years]		
	7×7	8×8	9×9	7×7	8×8	9×9
1.9 ≤ E < 2.1	16	14	15	26	24	25
2.1 ≤ E < 2.3	13	12	12	23	21	22
2.3 ≤ E < 2.5	11	9	10	20	18	19
2.5 ≤ E < 2.7	9	8	8	18	16	17
2.7 ≤ E < 2.9	8	7	7	15	13	14
2.9 ≤ E < 3.1	7	6	6	13	11	12
3.1 ≤ E < 3.3	6	6	6	11	10	10
3.3 ≤ E < 3.5	6	5	6	9	8	9
3.5 ≤ E < 3.7	6	5	6	8	7	7
3.7 ≤ E < 3.9	6	5	5	7	6	7
3.9 ≤ E < 4.1	5	5	5	7	6	7
4.1 ≤ E < 4.3	5	5	5	7	6	6
4.3 ≤ E < 4.5	5	5	5	6	6	6
4.5 ≤ E ≤ 4.7	5	5	5	6	6	6

Table B 2-6 Maine Yankee Site Specific Fuel Canister Loading Position Summary
(Not applicable to UNITAD STORAGE SYSTEM)

Site Specific Spent Fuel Configurations[1]	Est. Number of Assemblies[2]	Canister Loading Position
Total Number of Fuel Assemblies[3]	1,434	Any
Inserted Control Element Assembly (CEA)	168	Any
Inserted In-Core Instrument (ICI) Thimble	138	Any
Consolidated Fuel	2	Corner[4]
Fuel Rod Replaced by Rod Enriched to 1.95 wt %	3	Any
Fuel Rod Replaced by Stainless Steel Rod or Zirconium Alloy Rod	18	Any
Fuel Rods Removed	10	Corner[4]
Variable Enrichment[6]	72	Any
Variable Enrichment and Axial Blanket[6]	68	Any
Burnable Poison Rod Replaced by Hollow Zirconium Alloy Rod	80	Corner[4]
Damaged Fuel in MAINE YANKEE FUEL CAN	12	Corner[4]
Burnup between 45,000 and 50,000 MWD/MTU	90	Periphery[5]
MAINE YANKEE FUEL CAN	As Required	Corner[4]
Inserted Start-up Source	4	Corner[4]
Inserted CEA Finger Tip or ICI String Segment	1	Corner[4]

1. All spent fuel, including that held in a Maine Yankee fuel can, must conform to the loading limits presented in Tables B 2-8 and B 2-9 for cool time.
2. The number of fuel assemblies in some categories may vary depending on future fuel inspections.
3. Includes these site specific spent fuel configurations and standard fuel assemblies. Standard fuel assemblies may be loaded in any canister position.
4. Basket corner positions are positions 3, 6, 19, and 22 in Figure B 2-1. Corner positions are also periphery positions.
5. Basket periphery positions are positions 1, 2, 3, 6, 7, 12, 13, 18, 19, 22, 23, and 24 in Figure B 2-1. Periphery positions include the corner positions.
6. Variably enriched fuel assemblies have a maximum burnup of less than 30,000 MWd/MTU and enrichments greater than 1.9 wt %. The minimum required cool time for these assemblies is 5 years.

Table B 2-7 Maine Yankee Site Specific Fuel Limits
(Not applicable to UNITAD STORAGE SYSTEM)

A. Allowable Contents

1. Combustion Engineering 14 × 14 PWR UNDAMAGED FUEL ASSEMBLIES meeting the specifications presented in Tables B 2-1, B 2-2 and B 2-4.
2. PWR UNDAMAGED FUEL ASSEMBLIES may contain inserted Control Element Assemblies (CEA), In-Core Instrument (ICI) Thimbles or Flow Mixers. CEAs or Flow Mixers may not be inserted in damaged fuel assemblies, consolidated fuel assemblies or assemblies with irradiated stainless steel replacement rods. Fuel assemblies with a CEA or Flow Mixer inserted must be loaded in a Class 2 CANISTER and cannot be loaded in a Class 1 CANISTER. Fuel assemblies without an inserted CEA or CEA Plug, including those with inserted ICI Thimbles, must be loaded in a Class 1 CANISTER.
3. PWR UNDAMAGED FUEL ASSEMBLIES with fuel rods replaced with stainless steel or zirconium alloy rods or with uranium oxide rods nominally enriched up to 1.95 wt %.
4. PWR UNDAMAGED FUEL ASSEMBLIES with fuel rods having variable enrichments with a maximum fuel rod enrichment up to 4.21 wt % ^{235}U and that also have a maximum planar average enrichment up to 3.99 wt % ^{235}U.
5. PWR UNDAMAGED FUEL ASSEMBLIES with annular axial end blankets. The axial end blanket enrichment may be up to 2.6 wt % ^{235}U.
6. PWR UNDAMAGED FUEL ASSEMBLIES with solid filler rods or burnable poison rods occupying up to 16 of 176 fuel rod positions.
7. PWR UNDAMAGED FUEL ASSEMBLIES with one or more grid spacers missing or damaged such that the unsupported length of the fuel rods does not exceed 60 inches or with end fitting damage, including damaged or missing hold-down springs, as long as the assembly can be handled safely by normal means.

B. Allowable Contents requiring preferential loading based on shielding, criticality or thermal constraints. The preferential loading requirement for these fuel configurations is as described in Table B 2-6.

1. PWR UNDAMAGED FUEL ASSEMBLIES with up to 176 fuel rods missing from the fuel assembly lattice.
2. PWR UNDAMAGED FUEL ASSEMBLIES with a burnup between 45,000 and 50,000 MWd/MTU that must be loaded in accordance with Tables B 2-6 and B 2-8.
3. PWR UNDAMAGED FUEL ASSEMBLIES with a burnable poison rod replaced by a hollow zirconium alloy rod.

Table B 2-7 Maine Yankee Site Specific Fuel Limits (continued)

(Not applicable to UNITAD STORAGE SYSTEM)

4. UNDAMAGED FUEL ASSEMBLIES with a start-up source in a center guide tube. The assembly must be loaded in a basket corner position and must be loaded in a Class 1 CANISTER. Only one (1) start-up source may be loaded in any fuel assembly or any CANISTER.
5. PWR UNDAMAGED FUEL ASSEMBLIES with CEA ends (finger tips) and/or ICI segment inserted in corner guide tube positions. The assembly must also have a CEA plug installed. The assembly must be loaded in a basket corner position and must be loaded in a Class 2 CANISTER.
6. UNDAMAGED FUEL ASSEMBLIES may be loaded in a MAINE YANKEE FUEL CAN.
7. FUEL enclosed in a MAINE YANKEE FUEL CAN. The MAINE YANKEE FUEL CAN can only be loaded in a Class 1 CANISTER. The contents that must be loaded in the MAINE YANKEE FUEL CAN are:
   a) PWR fuel assemblies with up to two UNDAMAGED or DAMAGED FUEL rods inserted in each fuel assembly guide tube or with up to two burnable poison rods inserted in each guide tube. The rods inserted in the guide tubes cannot be from a different fuel assembly. The maximum number of rods in the fuel assembly (fuel rods plus inserted rods, including burnable poison rods) is 176.
   b) A DAMAGED FUEL ASSEMBLY with up to 100% of the fuel rods classified as damaged and/or damaged or missing assembly hardware components. A DAMAGED FUEL ASSEMBLY cannot have an inserted CEA or other nonfuel component.
   c) Individual UNDAMAGED or DAMAGED FUEL rods in a rod type structure, which may be a guide tube, to maintain configuration control.
   d) FUEL DEBRIS consisting of fuel rods with exposed fuel pellets or individual intact or partial fuel pellets not contained in fuel rods.
   e) CONSOLIDATED FUEL lattice structure with a 17 × 17 array formed by grids and top and bottom end fittings connected by four solid stainless steel rods. Maximum contents are 289 fuel rods having a total lattice weight ≤ 2,100 pounds. A CONSOLIDATED FUEL lattice cannot have an inserted CEA or other nonfuel component. Only one CONSOLIDATED FUEL lattice may be stored in any CANISTER.

C. Unenriched fuel assemblies are not authorized for loading.

D. A canister preferentially loaded in accordance with Table B 2-8 may only contain fuel assemblies selected from the same loading pattern.

Table B 2-8 Loading Table for Maine Yankee CE 14 × 14 Fuel with No Non-Fuel Material – Required Cool Time in Years Before Assembly is Acceptable (Not applicable to UNITAD STORAGE SYSTEM)

Enrichment	Burnup ≤ 30 GWD/MTU - Minimum Cool Time [years] for		
	Standard[1]	Preferential (I)[2]	Preferential (P)[3]
1.9 ≤ E < 2.1	5	5	5
2.1 ≤ E < 2.3	5	5	5
2.3 ≤ E < 2.5	5	5	5
2.5 ≤ E < 2.7	5	5	5
2.7 ≤ E < 2.9	5	5	5
2.9 ≤ E < 3.1	5	5	5
3.1 ≤ E < 3.3	5	5	5
3.3 ≤ E < 3.5	5	5	5
3.5 ≤ E < 3.7	5	5	5
3.7 ≤ E ≤ 4.2	5	5	5
Enrichment	**30 < Burnup ≤ 35 GWD/MTU – Minimum Cool Time [years] for**		
	Standard[1]	**Preferential (I)[2]**	**Preferential (P)[3]**
1.9 ≤ E < 2.1	5	5	5
2.1 ≤ E < 2.3	5	5	5
2.3 ≤ E < 2.5	5	5	5
2.5 ≤ E < 2.7	5	5	5
2.7 ≤ E < 2.9	5	5	5
2.9 ≤ E < 3.1	5	5	5
3.1 ≤ E < 3.3	5	5	5
3.3 ≤ E < 3.5	5	5	5
3.5 ≤ E < 3.7	5	5	5
3.7 ≤ E ≤ 4.2	5	5	5
Enrichment	**35 < Burnup ≤ 40 GWD/MTU - Minimum Cool Time [years] for**		
	Standard[1]	**Preferential (I)[2]**	**Preferential (P)[3]**
1.9 ≤ E < 2.1	7	7	5
2.1 ≤ E < 2.3	6	6	5
2.3 ≤ E < 2.5	6	6	5
2.5 ≤ E < 2.7	5	6	5
2.7 ≤ E < 2.9	5	6	5
2.9 ≤ E < 3.1	5	6	5
3.1 ≤ E < 3.3	5	6	5
3.3 ≤ E < 3.5	5	6	5
3.5 ≤ E < 3.7	5	6	5
3.7 ≤ E ≤ 4.2	5	6	5

1. "Standard" loading pattern: allowable decay heat = 0.958 kW per assembly
2. Preferential" loading pattern, interior basket locations: allowable heat decay .867 kW per assembly
3. Preferential" loading pattern, periphery basket locations: allowable heat decay = 1.05 kW per assembly

Table B 2-8 Loading Table for Maine Yankee CE 14 × 14 Fuel with No Non-Fuel Material – Required Cool Time in Years Before Assembly is Acceptable (continued)
(Not applicable to UNITAD STORAGE SYSTEM)

Enrichment	**40 < Burnup ≤ 45 GWD/MTU - Minimum Cool Time [years] for**		
	Standard[1]	**Preferential (I)[2]**	**Preferential (P)[3]**
1.9 ≤ E < 2.1	11	11	6
2.1 ≤ E < 2.3	9	9	6
2.3 ≤ E < 2.5	8	8	6
2.5 ≤ E < 2.7	7	7	6
2.7 ≤ E < 2.9	7	7	6
2.9 ≤ E < 3.1	6	7	6
3.1 ≤ E < 3.3	6	7	5
3.3 ≤ E < 3.5	6	7	5
3.5 ≤ E < 3.7	6	7	5
3.7 ≤ E ≤ 4.2	6	7	5
Enrichment	**45 < Burnup ≤ 50 GWD/MTU - Minimum Cool Time [years] for**		
	Standard[1]	**Preferential (I)[2]**	**Preferential (P)[3]**
1.9 ≤ E < 2.1	Not allowed	Not allowed	7
2.1 ≤ E < 2.3	Not allowed	Not allowed	7
2.3 ≤ E < 2.5	Not allowed	Not allowed	7
2.5 ≤ E < 2.7	Not allowed	Not allowed	7
2.7 ≤ E < 2.9	Not allowed	Not allowed	7
2.9 ≤ E < 3.1	Not allowed	Not allowed	7
3.1 ≤ E < 3.3	Not allowed	Not allowed	7
3.3 ≤ E < 3.5	Not allowed	Not allowed	6
3.5 ≤ E < 3.7	Not allowed	Not allowed	6
3.7 ≤ E ≤ 4.2	Not allowed	Not allowed	6

1. "Standard" loading pattern: allowable decay heat = 0.958 kW per assembly
2. "Preferential" loading pattern, interior basket locations: allowable heat decay = 0.867 kW per assembly
3. "Preferential" loading pattern, periphery basket locations: allowable heat decay = 1.05 kW per assembly

Table B 2-9 Loading Table for Maine Yankee CE 14 × 14 Fuel Containing CEA Cooled to Indicated Time (Not applicable to UNITAD STORAGE SYSTEM)

Enrichment	≤ 30 GWD/MTU Burnup - Minimum Cool Time in Years for				
	No CEA (Class 2)	5 Year CEA	10 Year CEA	15 Year CEA	20 Year CEA
1.9 ≤ E < 2.1	5	5	5	5	5
2.1 ≤ E < 2.3	5	5	5	5	5
2.3 ≤ E < 2.5	5	5	5	5	5
2.5 ≤ E < 2.7	5	5	5	5	5
2.7 ≤ E < 2.9	5	5	5	5	5
2.9 ≤ E < 3.1	5	5	5	5	5
3.1 ≤ E < 3.3	5	5	5	5	5
3.3 ≤ E < 3.5	5	5	5	5	5
3.5 ≤ E < 3.7	5	5	5	5	5
3.7 ≤ E ≤ 4.2	5	5	5	5	5
Enrichment	30 < Burnup ≤ 35 GWD/MTU - Minimum Cool Time in Years for				
	No CEA (Class 2)	5 Year CEA	10 Year CEA	15 Year CEA	20 Year CEA
1.9 ≤ E < 2.1	5	5	5	5	5
2.1 ≤ E < 2.3	5	5	5	5	5
2.3 ≤ E < 2.5	5	5	5	5	5
2.5 ≤ E < 2.7	5	5	5	5	5
2.7 ≤ E < 2.9	5	5	5	5	5
2.9 ≤ E < 3.1	5	5	5	5	5
3.1 ≤ E < 3.3	5	5	5	5	5
3.3 ≤ E < 3.5	5	5	5	5	5
3.5 ≤ E < 3.7	5	5	5	5	5
3.7 ≤ E ≤ 4.2	5	5	5	5	5
Enrichment	35 < Burnup ≤ 40 GWD/MTU - Minimum Cool Time in Years for				
	No CEA (Class 2)	5 Year CEA	10 Year CEA	15 Year CEA	20 Year CEA
1.9 ≤ E < 2.1	7	7	7	7	7
2.1 ≤ E < 2.3	6	6	6	6	6
2.3 ≤ E < 2.5	6	6	6	6	6
2.5 ≤ E < 2.7	5	6	5	5	5
2.7 ≤ E < 2.9	5	6	5	5	5
2.9 ≤ E < 3.1	5	6	5	5	5
3.1 ≤ E < 3.3	5	5	5	5	5
3.3 ≤ E < 3.5	5	5	5	5	5
3.5 ≤ E < 3.7	5	5	5	5	5
3.7 ≤ E ≤ 4.2	5	5	5	5	5
Enrichment	40 < Burnup ≤ 45 GWD/MTU - Minimum Cool Time in Years for				
	No CEA (Class 2)	5 Year CEA	10 Year CEA	15 Year CEA	20 Year CEA
1.9 ≤ E < 2.1	11	11	11	11	11
2.1 ≤ E < 2.3	9	9	9	9	9
2.3 ≤ E < 2.5	8	8	8	8	8
2.5 ≤ E < 2.7	7	7	7	7	7
2.7 ≤ E < 2.9	7	7	7	7	7
2.9 ≤ E < 3.1	6	6	6	6	6
3.1 ≤ E < 3.3	6	6	6	6	6
3.3 ≤ E < 3.5	6	6	6	6	6
3.5 ≤ E < 3.7	6	6	6	6	6
3.7 ≤ E ≤ 4.2	6	6	6	6	6

Table B 2-10 PWR Fuel Assembly Characteristics for the UNITAD STORAGE SYSTEM

Fuel Assembly	Typical No. of Fuel Rods	No. of Guide Tubes[1]	Max Active Length[2] (inch)	Max Assy Average Burnup (MWd/MTU)	Minimum Cool Time (Years)	Max Wt per Fuel Assy Location[3] (lbs)	Max Decay Heat per Fuel Assy Location (watts)
BW15H1	208	17	144.0	45,000	5	1,700	857
BW15H2	208	17	144.0	45,000	5	1,700	857
BW15H3	208	17	144.0	45,000	5	1,700	857
BW15H4	208	17	144.0	45,000	5	1,700	857
BW17H1	264	25	144.0	45,000	5	1,700	857
CE14H1	176	5	137.0	45,000	5	1,700	857
CE15H1	216	9[4]	132.60	45,000	5	1,700	857
CE16H1	236	5	150.0	45,000	5	1,700	857
WE14H1	179	17	145.2	45,000	5	1,700	857
WE15H1	204	21	144.0	45,000	5	1,700	857
WE15H2	204	21	144.0	45,000	5	1,700	857
WE17H1	264	25	144.0	45,000	5	1,700	857
WE17H2	264	25	144.0	45,000	5	1,700	857

[1] Combined number of guide and instrument tubes.

[2] Assembly characteristics represent cold, unirradiated, nominal configurations.

[3] Assemblies may contain thimble plugs (flow mixers), burnable poison rod assemblies (BPRAs), control element assemblies (CEAs), solid filler rods, or a solid neutron absorber as long as maximum fuel assembly weight is maintained.

[4] Assembly contains eight solid guide bars and one instrument tube.

[5] Minimum soluble boron of 700 ppm.

[6] Clad is zirconium alloy.

Table B 2-10 PWR Fuel Assembly Characteristics for the UNITAD STORAGE SYSTEM (continued)

Fuel Assembly	Max Load (MTU)	Max Initial Enrichment (wt % ^{235}U)[5]	Min Initial Enrichment (wt % ^{235}U)[5]	Max Pitch (inch)	Min Clad OD (inch)	Min Clad Thick.[6] (inch)	Max Pellet OD (inch)
BW15H1	0.4858	5.0	1.3	0.568	0.43	0.0265	0.3686
BW15H2	0.4988	5.0	1.3	0.568	0.43	0.025	0.3735
BW15H3	0.5006	5.0	1.3	0.568	0.428	0.023	0.3742
BW15H4	0.4690	5.0	1.3	0.568	0.414	0.022	0.3622
BW17H1	0.4799	5.0	1.3	0.502	0.377	0.022	0.3252
CE14H1	0.4167	5.0	1.3	0.58	0.44	0.026	0.3805
CE15H1	0.4341	5.0	1.3	0.55	0.415	0.0225	0.360
CE16H1	0.4463	5.0	1.3	0.5063	0.382	0.025	0.325
WE14H1	0.4188	5.0	1.3	0.556	0.40	0.0162	0.3674
WE15H1	0.4720	5.0	1.3	0.563	0.422	0.0242	0.3669
WE15H2	0.4469	5.0	1.3	0.563	0.417	0.0265	0.357
WE17H1	0.4740	5.0	1.3	0.496	0.372	0.0205	0.3232
WE17H2	0.4327	5.0	1.3	0.496	0.36	0.0225	0.3088

[1] Combined number of guide and instrument tubes.

[2] Assembly characteristics represent cold, unirradiated, nominal configurations.

[3] Assemblies may contain thimble plugs (flow mixers), burnable poison rod assemblies (BPRAs), control element assemblies (CEAs), solid filler rods, or a solid neutron absorber as long as maximum fuel assembly weight is maintained.

[4] Assembly contains eight solid guide bars and one instrument tube.

[5] Minimum soluble boron of 700 ppm.

[6] Clad is zirconium alloy.

Table B 2-11 Low Burnup Fuel – Minimum Fuel Assembly Enrichment (5-Year Cool Time) for the UNITAD STORAGE SYSTEM

Max. Assembly Avg. Burnup (MWd/MTU)	**Min. Assembly Avg. Initial Enrichment (wt% ^{235}U)**
10,000	1.3
15,000	1.5
20,000	1.7
25,000	1.9
30,000	2.1
35,000	2.3

Table B 2-12 Loading Table for UNITAD STORAGE SYSTEM PWR Fuel – 22 kW/Cask

Minimum Initial Assembly Avg. Enrichment wt % ^{235}U (E)	35 < Assembly Average Burnup ≤ 40 GWd/MTU Minimum Cooling Time (years)							
	CE 14×14	WE 14×14	WE 15×15	B&W 15×15	CE 15×15	CE 16×16	WE 17×17	B&W 17×17
2.5 ≤ E < 2.7	5.0	5.0	5.3	5.5	5.0	5.0	5.4	5.4
2.7 ≤ E < 2.9	5.0	5.0	5.2	5.4	5.0	5.0	5.3	5.3
2.9 ≤ E < 3.1	5.0	5.0	5.1	5.3	5.0	5.0	5.3	5.2
3.1 ≤ E < 3.3	5.0	5.0	5.1	5.2	5.0	5.0	5.2	5.2
3.3 ≤ E < 3.5	5.0	5.0	5.0	5.2	5.0	5.0	5.1	5.1
3.5 ≤ E < 3.7	5.0	5.0	5.0	5.1	5.0	5.0	5.0	5.0
3.7 ≤ E < 3.9	5.0	5.0	5.0	5.0	5.0	5.0	5.0	5.0
3.9 ≤ E < 4.1	5.0	5.0	5.0	5.0	5.0	5.0	5.0	5.0
4.1 ≤ E < 4.3	5.0	5.0	5.0	5.0	5.0	5.0	5.0	5.0
4.3 ≤ E < 4.5	5.0	5.0	5.0	5.0	5.0	5.0	5.0	5.0
4.5 ≤ E < 4.7	5.0	5.0	5.0	5.0	5.0	5.0	5.0	5.0
4.7 ≤ E < 4.9	5.0	5.0	5.0	5.0	5.0	5.0	5.0	5.0
E ≥ 4.9	5.0	5.0	5.0	5.0	5.0	5.0	5.0	5.0
Minimum Initial Assembly Avg. Enrichment wt % ^{235}U (E)	**40 < Assembly Average Burnup ≤ 45 GWd/MTU Minimum Cooling Time (years)**							
	CE 14×14	**WE 14×14**	**WE 15×15**	**B&W 15×15**	**Pal. 15×15**	**CE 16×16**	**WE 17×17**	**B&W 17×17**
2.7 ≤ E < 2.9	5.3	5.5	6.3	6.6	5.7	5.9	6.4	6.4
2.9 ≤ E < 3.1	5.2	5.4	6.2	6.5	5.6	5.8	6.3	6.3
3.1 ≤ E < 3.3	5.1	5.3	6.1	6.4	5.6	5.7	6.2	6.2
3.3 ≤ E < 3.5	5.0	5.2	6.0	6.2	5.5	5.7	6.1	6.1
3.5 ≤ E < 3.7	5.0	5.1	5.9	6.1	5.4	5.6	6.0	6.0
3.7 ≤ E < 3.9	5.0	5.0	5.9	6.0	5.3	5.5	6.0	6.0
3.9 ≤ E < 4.1	5.0	5.0	5.8	6.0	5.3	5.5	5.9	5.9
4.1 ≤ E < 4.3	5.0	5.0	5.7	5.9	5.2	5.4	5.9	5.8
4.3 ≤ E < 4.5	5.0	5.0	5.7	5.9	5.1	5.3	5.8	5.8
4.5 ≤ E < 4.7	5.0	5.0	5.6	5.8	5.1	5.3	5.8	5.7
4.7 ≤ E < 4.9	5.0	5.0	5.6	5.8	5.0	5.2	5.7	5.7
E ≥ 4.9	5.0	5.0	5.5	5.7	5.0	5.2	5.7	5.7

Table B 2-13 Additional Cool Time Required for Loading Nonfuel Components for the UNITAD STORAGE SYSTEM

Assembly	Cool Time [years]		
	BP	TP	CEA
CE 14×14	--	--	0.1
WE 14×14	0.1	0.1	0.4
WE 15×15	0.1	0.1	0.6
B&W 15×15	0.1	0.1	0.1
CE 15×15	--	--	--
CE 16×16	--	--	0.1
WE 17×17	0.2	0.1	0.5
B&W 17×17	0.1	0.1	0.1
Maximum	0.2	0.1	0.6

B 3.1 Site

B 3.1.1 Site Location

The NAC-UMS® SYSTEM is authorized for general use by 10 CFR 50 license holders at various site locations under the provisions of 10 CFR 72, Subpart K.

B 3.2 Design Features Important for Criticality Control

B 3.2.1 CANISTER

a) Minimum ^{10}B loading in the neutron absorbers:
   1. PWR – 0.025g/cm^2 (Not applicable to UNITAD STORAGE SYSTEM)
   2. BWR – 0.011g/cm^2 (Not applicable to UNITAD STORAGE SYSTEM)
   3. PWR – 0.017g/cm^2 (Applicable to UNITAD STORAGE SYSTEM only)

b) Minimum length of UNDAMAGED FUEL ASSEMBLY internal structure and bottom end fitting and/or spacers shall ensure the minimum distance to the fuel region from the base of the CANISTER is:
   1. PWR – 3.2 inches
   2. BWR – 6.2 inches

c) Soluble boron concentration in the PWR fuel pool and CANISTER water:
   1. Fuel meeting the enrichment limits in Table B 2–2 without boron - 0 ppm (Not applicable to UNITAD STORAGE SYSTEM)
   2. Fuel meeting the enrichment limits in Table B 2–2 with boron ≥ 1,000 ppm (Not applicable to UNITAD STORAGE SYSTEM)
   3. For all fuel loaded in the UNITAD STORAGE SYSTEM the boron concentration shall be ≥ 700 ppm.

d) Minimum water temperature for PWR fuel to ensure boron is soluble:
   1. Temperature should be 5-10°F higher than the minimum needed to ensure solubility.

e) For the NAC-UMS STORAGE SYSTEM, minimum flux trap (structural disk web) thickness is specified per Figure B 2-1 (PWR) and Figure B 2-2 (BWR) (Not applicable to UNITAD STORAGE SYSTEM).

f) For the UNITAD STORAGE SYSTEM, minimum inner flux trap (structural disk web) thickness is 1.22 inches; minimum outer flux trap (structural disk web) thickness is 0.97 inch.

(continued)

B 3.3 Codes and Standards

The American Society of Mechanical Engineers Boiler and Pressure Vessel Code (ASME Code) is the governing Code for the NAC-UMS® CANISTER, 1995 Edition with Addenda through 1995. For the UNITAD STORAGE SYSTEM the 2004 Edition with 2006 Addenda is applicable.

The American Concrete Institute Specifications ACI-349 (1985) and ACI-318 (1995) govern the NAC-UMS® CONCRETE CASK design and construction, respectively.

The American National Standards Institute ANSI N14.6 (1993) and NUREG-0612 govern the NAC-UMS® TRANSFER CASK design, operation, fabrication, testing, inspection and maintenance.

B 3.3.1 Exceptions to Codes, Standards, and Criteria

Table B 3-1 lists alternatives to the ASME Code for the design of the NAC-UMS® SYSTEM.

B 3.3.2 Construction/Fabrication Exceptions to Codes, Standards, and Criteria

Proposed alternatives to ASME Code, Section III, 1995 Edition with Addenda through 1995 (2004 Edition with 2006 Addenda for the UNITAD STORAGE SYSTEM), including exceptions listed in Specification B 3.3.1, may be used when authorized by the Director of the Office of Nuclear Material Safety and Safeguards or designee. The request for such alternatives should demonstrate that:

1. The proposed alternatives would provide an acceptable level of quality and safety, or
2. Compliance with the specified requirements of ASME Code, Section III, 1995 Edition with Addenda through 1995 (2004 Edition with 2006 Addenda for the UNITAD STORAGE SYSTEM), would result in hardship or unusual difficulty without a compensating increase in the level of quality and safety.

Requests for exceptions shall be submitted in accordance with 10 CFR 72.4.

Table B 3-1 List of ASME Code Alternatives for the NAC-UMS® SYSTEM, including the UNITAD STORAGE SYSTEM

Component	Reference ASME Code Section/Article	Code Requirement	Exception, Justification and Compensatory Measures
CANISTER	NB-1100	Statement of requirements for Code stamping of components.	CANISTER is designed and will be fabricated in accordance with ASME Code, Section III, Subsection NB to the maximum practical extent, but Code stamping is not required. The completion of an ASME Design Specification, Design Report and Overpressure Protection Report is not required.
CANISTER	NB-2000	Requirements for materials to be supplied by ASME-approved material supplier.	Materials will be supplied by NAC-approved suppliers with Certified Material Test Reports (CMTRs) in accordance to NB-2000 requirements.
CANISTER	NB-2500	Repairs to pressure-retaining material from which a defect(s) has been removed are to be examined by magnetic particle or dye penetrant methods. If the depth of the repair exceeds the lesser of 3/8-inch or 10% of the section thickness, examination is to be by radiography.	In accordance with ASME Code Case N-595-4, a loaded CANISTER shell examination of a weld repair of material within 1/2-inch of a closure weld may be done by progressive magnetic particle or dye penetrant examination methods for each weld layer ≤1/4-inch and final surface.
CANISTER Shield Lid and Structural Lid Welds (Closure Lid and Closure Ring Welds for UNITAD STORAGE SYSTEM)	NB-4243	Full penetration welds required for Category C joints (flat head to main shell per NB-3352.3).	Shield lid and structural lid, or closure lid and closure ring welds for the UNITAD SYSTEM, to CANISTER shell welds are not full penetration welds. These field welds are performed independently to provide a redundant closure.
CANISTER Structural Lid Weld (Not applicable for UNITAD STORAGE SYSTEM)	NB-4421	Requires removal of backing ring.	Structural lid to CANISTER shell weld uses a backing ring that is not removed. The backing ring permits completion of the groove weld; it is not considered in any analyses; and it has no detrimental effect on CANISTER function.

Table B 3-1 List of ASME Code Alternatives for the NAC-UMS® SYSTEM, including the UNITAD STORAGE SYSTEM (continued)

Component	Reference ASME Code Section/Article	Code Requirement	Exception, Justification and Compensatory Measures
CANISTER Vent Port Cover and Drain Port Cover to Shield Lid (Port Cover Plates to Closure Lid for UNITAD STORAGE SYSTEM) Welds; Shield Lid to Shell Weld; and Closure Ring to Shell and Closure Lid Welds	NB-5230	Radiographic (RT) or ultrasonic (UT) examination required.	Root and final surface liquid penetrant examination to be performed per ASME Code Section V, Article 6, with acceptance in accordance with ASME Code, Section III, NB-5350. If port cover, port cover plate and closure ring welds are completed in a single pass, only final surface examinations are required. Inner port cover plates of the UNITAD STSTEM CANISTER are leak tested to verify the absence of helium leakage as described in Chapter 9.
CANISTER Structural Lid to Shell Weld (Closure Lid to Shell Weld for UNITAD STORAGE SYSTEM)	NB-5230	Radiographic (RT) or ultrasonic (UT) examination required.	The CANISTER structural lid to CANISTER shell closure weld (or Closure Lid to CANISTER shell closure weld) is performed in the field following fuel assembly loading. The structural lid-to-shell weld (or closure lid-to-shell weld) will be verified by either ultrasonic (UT) or progressive liquid penetrant (PT) examination. If progressive PT examination is used, at a minimum, it must include the root and final layers and each approximately 3/8 inch of weld depth for the Structural Lid to Shell Weld (or root, mid-plane and final weld layers for the Closure Lid to Shell Weld for the UNITAD SYSTEM CANISTER). If UT examination is used, it will be followed by a final surface PT examination. For either UT or PT examination, the maximum, undetectable flaw size is demonstrated to be smaller than the critical flaw size. The critical flaw size is determined in accordance with ASME Code, Section XI methods. The examination of the weld will be performed by qualified personnel per ASME Code Section V, Articles 5 (UT) and 6 (PT) with acceptance per ASME Code Section III, NB-5332 (UT), and NB-5350 for (PT).

Table B 3-1 List of ASME Code Alternatives for the NAC-UMS® SYSTEM, including the UNITAD STORAGE SYSTEM (continued)

Component	Reference ASME Code Section/Article	Code Requirement	Exception, Justification and Compensatory Measures
CANISTER Vessel and Shield Lid (Closure Lid to Shell Weld for UNITAD STORAGE SYSTEM)	NB-6111	All completed pressure retaining systems shall be pressure tested.	The CANISTER shield lid, or closure lid, to shell weld is performed in the field following fuel assembly loading. The CANISTER is then pneumatically (air/nitrogen/ helium-over-water) pressure tested as defined in Chapter 9 (for Shield Lid to Shell Weld) or hydrostatically tested (for Closure Lid to Shell Weld) as described and specified in Chapters 8 and 9. The Shield Lid-to-Shell Weld is also leak tested to the leak-tight criteria of ANSI N14.5. The Closure Lid-to-Shell Weld and UNITAD SYSTEM CANISTER are compliant with ISG-15 and ISG-18 requirements and no leakage test of the Closure Lid-to-Shell Weld is required.
CANISTER Vessel	NB-7000	Vessels are required to have overpressure protection.	No overpressure protection is provided. The function of the CANISTER is to confine radioactive contents under normal, off-normal, and accident conditions of storage. The CANISTER vessel is designed to withstand a maximum internal pressure considering 100% fuel rod failure and maximum accident temperatures.
CANISTER Vessel	NB-8000	States requirements for nameplates, stamping and reports per NCA-8000.	The NAC-UMS® SYSTEM is marked and identified in accordance with 10 CFR 72 requirements. Code stamping is not required. The QA data package will be in accordance with NAC's approved QA program. The completion of an ASME Design Specification, Design Report and Overpressure Protection Report is not required.

Table B 3-1 List of ASME Code Alternatives for the NAC-UMS® SYSTEM, including the UNITAD STORAGE SYSTEM (continued)

Component	Reference ASME Code Section/Article	Code Requirement	Exception, Justification and Compensatory Measures
CANISTER Basket Assembly	NG-2000	Requires materials to be supplied by ASME approved material supplier.	Materials to be supplied by NAC-approved suppliers with CMTRs in accordance with NG-2000 requirements.
CANISTER Basket Assembly	NG-8000	States requirements for nameplates, stamping and reports per NCA-8000.	The NAC-UMS® SYSTEM will be marked and identified in accordance with 10 CFR 72 requirements. No Code stamping is required. The CANISTER basket data package will be in accordance with NAC's approved QA program.
CANISTER Vessel and Basket Assembly Material	NB-2130/ NG-2130	States requirements for certification of material organizations and materials to NCA-3861 and NCA-3862, respectively.	The NAC-UMS® CANISTER and Basket Assembly component materials are procured in accordance with the specifications for materials in ASME Code Section II with Certified Material Test Reports. The component materials will be obtained from NAC approved Suppliers in accordance with NAC's approved QA program.

B 3.4 Site Specific Parameters and Analyses

This section presents site-specific parameters and analytical bases that must be verified by the NAC-UMS® SYSTEM user. The parameters and bases presented in Section B.3.4.1 are those applied in the design basis analysis. The parameters and bases used in the evaluation of SITE SPECIFIC FUEL are presented in the appropriate sections below.

B 3.4.1 Design Basis Site Specific Parameters and Analyses

The design basis site-specific parameters and analyses that require verification by the NAC-UMS® SYSTEM or the UNITAD SYSTEM user are:

1. The temperature of 76°F is the maximum average yearly temperature. The 3-day average ambient temperature shall be 106°F or less.

2. The allowed temperature extremes, averaged over a 3-day period, shall be greater than –40°F and less than 133°F.

3. a) The design basis earthquake horizontal and vertical seismic acceleration levels at the top surface of the ISFSI pad or at the center of gravity of the loaded concrete cask on the ISFSI pad are bounded by the values shown:

Configuration	Coefficient of Friction	Horizontal g-level in each of Two Orthogonal Directions	Corresponding Vertical g-level
Standard	0.35	0.26g	0.26g
Standard	0.40	0.29g	0.29g

Note: For site conditions that are not bounded by the above values, site-specific analysis may be performed in accordance with 3.4.1(3)(b).

b) Alternatively, the design basis earthquake motion of the ISFSI pad may be limited so that the acceleration g-load resulting from the collision of two sliding casks remains bounded by the accident condition analyses presented in Chapter 11 of the FSAR.

Site-specific analysis by the cask user shall demonstrate that a cask does not slide off the ISFSI pad.

(continued)

B 3.4.1 Design Basis Site Specific Parameters and Analyses (continued)

4. The analyzed flood condition of 15 fps water velocity and a height of 50 feet of water (full submergence of the loaded cask) are not exceeded.

5. The potential for fire and explosion shall be addressed, based on site-specific considerations. This includes the condition that the fuel tank of the cask handling equipment used to move the loaded CONCRETE CASK onto or from the ISFSI site contains no more than 50 gallons of fuel.

6 In cases where engineered features (i.e., berms, shield walls) are used to ensure that requirements of 10 CFR 72.104(a) are met, such features are to be considered important to safety and must be evaluated to determine the applicable Quality Assurance Category on a site specific basis.

7. TRANSFER CASK OPERATIONS shall only be conducted with surrounding air temperatures ≥ 0°F.

8. The VERTICAL CONCRETE CASK shall only be lifted by the lifting lugs with surrounding air temperatures ≥ 0°F.

B 3.4.2 Maine Yankee Site Specific Parameters and Analyses (Not applicable for UNITAD STORAGE SYSTEM)

The design basis site-specific parameters and analyses that require verification by Maine Yankee are:

1. The temperature of 76°F is the maximum average yearly temperature. The 3-day average ambient temperature shall be 106°F or less.

2. The allowed temperature extremes, averaged over a 3-day period, shall be greater than –40°F and less than 133°F.

3. The design basis earthquake horizontal and vertical seismic acceleration levels at the top surface of the ISFSI pad are bounded by the values shown:

Configuration	Coefficient of Friction	Horizontal g-level in each of Two Orthogonal Directions[1]	Corresponding Vertical g-level (upward)
Maine Yankee	0.50	0.38	0.38 × 0.667 = 0.253g

[1] Earthquake loads are applied to the center of gravity of the concrete cask on the ISFSI pad.

4. The analyzed flood condition of 15 fps water velocity and a height of 50 feet of water (full submergence of the loaded cask) are not exceeded.

5. The potential for fire and explosion shall be addressed, based on site-specific considerations. This includes the condition that the fuel tank of the cask handling equipment used to move the loaded CONCRETE CASK onto or from the ISFSI site contains no more than 50 gallons of fuel.

6. Physical testing shall be conducted to demonstrate that the coefficient of friction between the concrete cask and ISFSI pad surface is at least 0.5.

(continued)

B 3.4.2 Maine Yankee Site Specific Parameters and Analyses (continued)
(Not applicable for UNITAD STORAGE SYSTEM)

7. In addition to the requirements of 10 CFR 72.212(b)(2)(ii), the ISFSI pad(s) and foundation shall meet the design basis earthquake horizontal and vertical seismic acceleration levels at the top surface of the ISFSI pad as specified in B 3.4.2 (3).

   The surface of the ISFSI pad shall have a broom finish or brushed surface as defined in ACI 116R-90 and described in Sections 7.12 and 7.13.4 of ACI 302.1R.

8. In cases where engineered features (i.e., berms, shield walls) are used to ensure that requirements of 10 CFR 72.104(a) are met, such features are to be considered important to safety and must be evaluated to determine the applicable Quality Assurance Category on a site specific basis.

9. TRANSFER CASK OPERATIONS shall only be conducted with surrounding air temperatures ≥ 0°F.

B 3.5 CANISTER HANDLING FACILITY (CHF)

B 3.5.1 TRANSFER CASK and CANISTER Lifting Devices

Movements of the TRANSFER CASK and CANISTER outside of the 10 CFR 50 licensed facilities, when loaded with spent fuel are not permitted unless the movements are made with a CANISTER HANDLING FACILITY designed, operated, fabricated, tested, inspected and maintained in accordance with the guidelines of NUREG-0612, "Control of Heavy Loads at Nuclear Power Plants" and the below clarifications. This Technical Specification does not apply to handling heavy loads under a 10 CFR 50 license.

B.3.5.2 CANISTER HANDLING FACILITY Structure Requirements

B 3.5.2.1 CANISTER Station and Stationary Lifting Devices

1. The weldment structure of the CANISTER HANDLING FACILITY shall be designed to comply with the stress limits of ASME Code, Section III, Subsection NF, Class 3 for linear structures. The applicable loads, load combinations, and associated service condition definitions are provided in Table B 3-2. All compression loaded members shall satisfy the buckling criteria of ASME Code, Section III, Subsection NF.

2. If a portion of the CANISTER HANDLING FACILITY structure is constructed of reinforced concrete, then the factored load combinations set forth in ACI-318 (1995) for the loads defined in Table B 3-2 shall apply.

3. The TRANSFER CASK and CANISTER lifting device used with the CANISTER HANDLING FACILITY shall be designed, fabricated, operated, tested, inspected and maintained in accordance with NUREG-0612, Section 5.1.

(continued)

B 3.5.2.1 CANISTER HANDLING Station and Stationary Lifting Devices (continued)

4. The CHF design shall incorporate an impact limiter for CANISTER lifting and movement if a qualified single failure proof crane is not used. The impact limiter must be designed and fabricated to ensure that, if a CANISTER is dropped, the confinement boundary of the CANISTER would not be breached.

B 3.5.2.2 Mobile Lifting Devices

If a mobile lifting device is used as the lifting device, in lieu of a stationary lifting device, it shall meet the guidelines of NUREG-0612, Section 5.1, with the following clarifications:

1. Mobile lifting devices shall have a minimum safety factor of two over the allowable load table for the lifting device in accordance with the guidance of NUREG-0612, Section 5.1.6(1)(a) and shall be capable of stopping and holding the load during a Design Basis Earthquake (DBE) event.
2. Mobile lifting devices shall conform to the requirements of ANSI B30.5, "Mobile and Locomotive Cranes," in lieu of the requirements of ANSI B30.2, "Overhead and Gantry Cranes."
3. Mobile cranes are not required to meet the requirements of NUREG-0612, Section 5.1.6(2) for new cranes.

Table B 3-2 Load Combinations and Service Condition Definitions for the CANISTER HANDLING FACILITY (CHF) Structure

Load Combination	ASME Section III Service Condition for Definition of Allowable Stress	Comment
D* D + S	Level A	All primary load bearing members must satisfy Level A stress limits
D + M + W'[1] D + F D + E D + Y	Level D	Factor of safety against overturning shall be ≥ 1.1

D = Crane hook dead load
D* = Apparent crane hook dead load
S = Snow and ice load for the CHF site
M = Tornado missile load of the CHF site[1]
W' = Tornado wind load for the CHF site[1]
F = Flood load for the CHF site
E = Seismic load for the CHF site
Y = Tsunami load for the CHF site

Note:
1. Tornado missile load may be reduced or eliminated based on a PRA for the CHF site.

THIS PAGE INTENTIONALLY LEFT BLANK

APPENDIX 12.C

TECHNICAL SPECIFICATION BASES FOR THE NAC-UMS® SYSTEM

Appendix 12.C
Table of Contents

C 1.0 Introduction 12C1-1

C 2.0 APPROVED CONTENTS 12.C.2-1
C 2.1 Fuel to be Stored in the NAC-UMS® SYSTEM 12.C.2-1

C 3.0 LIMITING CONDITION FOR OPERATION (LCO) APPLICABILITY 12.C.3-1
SURVEILLANCE REQUIREMENT (SR) APPLICABILITY 12.C.3-4
C 3.1 NAC-UMS® SYSTEM Integrity 12.C.3-9
C 3.1.1 CANISTER Maximum Time in Vacuum Drying 12.C.3-9
C 3.1.2 CANISTER Vacuum Drying Pressure 12.C.3-14
C 3.1.3 CANISTER Helium Backfill Pressure 12.C.3-17
C 3.1.4 CANISTER Maximum Time in the TRANSFER CASK 12.C.3-20
C 3.1.5 CANISTER Helium Leak Rate (Not applicable to the UNITAD STORAGE SYSTEM) 12.C.3-25
C 3.1.6 CONCRETE CASK Heat Removal System 12.C.3-28

C 3.2 NAC-UMS® SYSTEM Radiation Protection 12.C.3-32
C 3.2.1 CANISTER Surface Contamination 12.C.3-32
C 3.2.2 CONCRETE CASK Average Surface Dose Rates 12.C.3-35

C 3.3 NAC-UMS® SYSTEM Criticality Control 12.C.3-38
C 3.3.1 Dissolved Boron Concentration 12.C.3-38

C 1.0 Introduction

This Appendix presents the design or operational condition, or regulatory requirement for the NAC-UMS® SYSTEM, including the UNITAD STORAGE SYSTEM, which establishes the bases for the Technical Specifications provided in Appendix A of Certificate of Compliance No. 1015.

The section and paragraph numbering used in this Appendix is consistent to the numbering used in Appendix A, Technical Specifications for the NAC-UMS® SYSTEM, and Appendix B, Approved Contents and Design Features for the NAC-UMS® System, of Certificate of Compliance No. 1015.

THIS PAGE INTENTIONALLY LEFT BLANK

C 2.0 APPROVED CONTENTS

C 2.1 Fuel to be Stored in the NAC-UMS® SYSTEM

BASES

BACKGROUND

The NAC-UMS® SYSTEM design requires specifications for the spent fuel to be stored, such as the type of spent fuel, minimum and maximum allowable enrichment prior to irradiation, maximum burnup, minimum acceptable post-irradiation cooling time prior to storage, maximum decay heat, and condition of the spent fuel (i.e., UNDAMAGED FUEL). Other important limitations are the dimensions and weight of the fuel assemblies.

The approved contents, which can be loaded into the NAC-UMS® SYSTEM are specified in Section B 2.0 of Appendix 12.B.

Specific limitations for the NAC-UMS® SYSTEM are specified in Table B2-1 of Appendix 12.B. These limitations support the assumptions and inputs used in the thermal, structural, shielding, and criticality evaluations performed for the NAC-UMS® SYSTEM.

APPLICABLE SAFETY ANALYSES

To ensure that the shield lid is not placed on a CANISTER containing an unauthorized fuel assembly, facility procedures require verification of the loaded fuel assemblies to ensure that the correct fuel assemblies have been loaded in the canister.

APPROVED CONTENTS

C 2.1.1

Approved Contents Section B.2.0 refers to Table B2-1 in Appendix 12.B for the specific fuel assembly characteristics for the PWR or BWR (UNITAD STORAGE SYSTEM not included) fuel assemblies authorized for loading into the NAC-UMS® SYSTEM. These fuel assembly characteristics include parameters such as cladding material, minimum and maximum enrichment, decay heat generation, post-irradiation cooling time, burnup, and fuel assembly length, width, and weight. Tables B2-2 through B2-5 are referenced from Table B2-1 and provide additional specific fuel characteristic limits for the fuel assemblies based on the fuel assembly class type, enrichment, burnup and cooling time.

(continued)

APPROVED CONTENTS (continued)	The fuel assembly characteristic limits of Tables B2-1 and B2-2 through B2-5 (not applicable to UNITAD STORAGE SYSTEM) must be met to ensure that the thermal, structural, shielding, and criticality analyses supporting the NAC-UMS® SYSTEM Safety Analysis Report are bounding. For the UNITAD STORAGE SYSTEM, the fuel assembly characteristic limits of Tables B2-1, B2-10 and B2-11 must be met to ensure that the thermal, structural, shielding, and criticality analyses supporting the NAC-UMS® SYSTEM Safety Analysis Report are bounding. C 2.1.2 Approved Contents Section B2.0 in Appendix 12.B requires preferential loading of Maine Yankee SITE SPECIFIC FUEL assemblies with significantly different post-irradiation cooling times. This preferential loading is required to prevent a cooler assembly from heating up due to being surrounded by hotter fuel assemblies. For the purposes of complying with this Approved Contents limit, only fuel assemblies with post-irradiation cooling times differing by one year or greater need to be loaded preferentially. This is based on the fact that the heat-up phenomenon can only occur with significant differences in decay heat generation characteristics between adjacent fuel assemblies having different post-irradiation cooling times.
APPROVED CONTENT LIMITS AND VIOLATIONS	C 2.2.1 If any Approved Contents limit of B2.1.1 or B2.1.2 in Appendix 12.B is violated, the limitations on fuel assemblies to be loaded are not met. Action must be taken to place the affected fuel assembly(s) in a safe condition. This safe condition may be established by returning the affected fuel assembly(s) to the spent fuel pool. However, it is acceptable for the affected fuel assemblies to temporarily remain in the NAC-UMS® SYSTEM, in a wet or dry condition, if that is determined to be a safe condition. C 2.2.2 and C 2.2.3 NRC notification of the Approved Contents limit violation is required within 24 hours. A written report on the violation must be submitted to the NRC within 30 days. This notification and written report are independent of any reports and notification that may be required by 10 CFR 72.216.
REFERENCES	FSAR, Sections 2.1, 4.4; Chapters 5 and 6; Sections 2.A.2 and 6.A.2 for the UNITAD STORAGE SYSTEM.

C 3.0 LIMITING CONDITION FOR OPERATION (LCO) APPLICABILITY

BASES

LCOs	LCO 3.0.1, 3.0.2, 3.0.4, and 3.0.5 establish the general requirements applicable to all Specifications and apply at all times, unless otherwise stated.
LCO 3.0.1	LCO 3.0.1 establishes the Applicability statement within each individual Specification as the requirement for when the LCO is required to be met (i.e., when the NAC-UMS® SYSTEM is in the specified conditions of the Applicability statement of each Specification).
LCO 3.0.2	LCO 3.0.2 establishes that upon discovery of a failure to meet an LCO, the associated ACTIONS shall be met. The Completion Time of each Required Action for an ACTIONS Condition is applicable from the point in time that an ACTIONS Condition is entered. The Required Actions establish those remedial measures that must be taken within the specified Completion Times when the requirements of an LCO are not met. This Specification establishes that: a. Completion of the Required Actions within the specified Completion Times constitutes compliance with a Specification; and, b. Completion of the Required Actions is not required when an LCO is meet within the specified Completion Time, unless otherwise specified. There are two basic Required Action types. The first Required Action type specifies a time limit, the Completion Time to restore a system or component or to restore variables to within specified limits, in which the LCO must be met. Whether stated as a Required Action or not, correction of the entered Condition is an action that may always be considered upon entering ACTIONS. The second Required Action type specifies the remedial measures that permit continued activities that are not further restricted by the Completion Time. In this case, compliance with the Required Actions provides an acceptable level of safety for continued operation.

(continued)

LCO 3.0.2 (continued)	Completing the Required Actions is not required when an LCO is met or is no longer applicable, unless otherwise stated in the individual Specifications. The Completion Times of the Required Actions are also applicable when a system or component is removed from service intentionally. The reasons for intentionally relying on the ACTIONS include, but are not limited to, performance of Surveillance, preventive maintenance, corrective maintenance, or investigation of operational problems. Entering ACTIONS for these reasons must be done in a manner that does not compromise safety. Intentional entry into ACTIONS should not be made for operational convenience.
LCO 3.0.3	This specification is not applicable to the NAC-UMS® SYSTEM because it describes conditions under which a power reactor must be shut down when an LCO is not met and an associated ACTION is not met or provided. The placeholder is retained for consistency with the power reactor technical specifications.
LCO 3.0.4	LCO 3.0.4 establishes limitations on changes in specified conditions in the Applicability when an LCO is not met. It precludes placing the facility in a specified condition stated in that Applicability (e.g., Applicability desired to be entered) when the following exist: a. NAC-UMS® SYSTEM conditions are such that the requirements of the LCO would not be met in the Applicability desired to be entered; and b. Continued noncompliance with the LCO requirements, if the Applicability were entered, would result in NAC-UMS® SYSTEM activities being required to exit the Applicability desired to be entered to comply with the Required Actions. Compliance with Required Actions that permit continued operation for an unlimited period of time in a specified condition provides an acceptable level of safety for continued operation. This is without regard to the status of the NAC-UMS® SYSTEM. Therefore, in such cases, entry into a specified condition in the Applicability may be made in accordance with the provisions of the Required Actions.

(continued)

LCO 3.0.4 (continued)

The provisions of this Specification should not be interpreted as endorsing the failure to exercise the good practice of restoring systems or components before entering an associated specified condition in the Applicability.

The provisions of LCO 3.0.4 shall not prevent changes in specified conditions in the Applicability that are required to comply with ACTIONS. In addition, the provisions of LCO 3.0.4 shall not prevent changes in specified conditions in the Applicability that are related to the unloading of the NAC-UMS® SYSTEM.

Exceptions to LCO 3.0.4 are stated in the individual Specifications. Exceptions may apply to all the ACTIONS or to a specific Required Action of a Specification.

LCO 3.0.5

LCO 3.0.5 establishes the allowance for restoring equipment to service under administrative controls when it has been removed from service or determined to not meet the LCO to comply with the ACTIONS. The sole purpose of the Specification is to provide an exception to LCO 3.0.2 (e.g. to not comply with the applicable Required Action[s]) to allow the performance of testing to demonstrate:

a. The equipment being returned to service meets the LCO; or

b. Other equipment meets the applicable LCOs.

The administrative controls ensure the time the equipment is returned to service in conflict with the requirements of the ACTIONS is limited to the time absolutely necessary to perform the allowed testing. This Specification does not provide time to perform any other preventive or corrective maintenance.

C 3.0 SURVEILLANCE REQUIREMENT (SR) APPLICABILITY

BASES

Surveillance Requirements (SRs)	SR 3.0.1 through SR 3.0.4 establish the general requirements applicable to all Specifications and apply at all times, unless otherwise stated.
SR 3.0.1	SR 3.0.1 establishes the requirement that SRs must be met during the specified conditions in the Applicability for which the requirements of the LCO apply, unless otherwise specified in the individual SRs. This Specification is to ensure that Surveillance is performed to verify that systems and components meet the LCO and variables are within specified limits. Failure to meet Surveillance within the specified Frequency, in accordance with SR 3.0.2, constitutes a failure to meet an LCO. Systems and components are assumed to meet the LCO when the associated SRs have been met. Nothing in this Specification, however, is to be construed as implying that systems or components meet the associated LCO when: a. The systems or components are known to not meet the LCO, although still meeting the SRs; or, b. The requirements of the Surveillance(s) are known to be not met between required Surveillance performances. Surveillances do not have to be performed when the NAC-UMS® SYSTEM is in a specified condition for which the requirements of the associated LCO are not applicable, unless otherwise specified. Surveillances, including those invoked by Required Actions, do not have to be performed on equipment that has been determined to not meet the LCO because the ACTIONS define the remedial measures that apply. Surveillances have to be met and performed in accordance with SR 3.0.2, prior to returning equipment to service. Upon completion of maintenance, appropriate post maintenance testing is required. This includes ensuring applicable Surveillances are not failed and their most recent performance is in accordance with SR 3.0.2. Post maintenance

(continued)

SR 3.0.1 (continued)	testing may not be possible in the current specified conditions in the Applicability, due to the necessary NAC-UMS® SYSTEM parameters not having been established. In these situations, the equipment may be considered to meet the LCO provided testing has been satisfactorily completed to the extent possible and the equipment is not otherwise believed to be incapable of performing its function. This will allow operation to proceed to a specified condition where other necessary post-maintenance tests can be completed.
SR 3.0.2	SR 3.0.2 establishes the requirements for meeting the specified Frequency for Surveillances and any Required Action with a Completion Time that requires the periodic performance of the Required Action on a "once per…" interval. This extension facilitates Surveillance scheduling and considers facility conditions that may not be suitable for conducting the Surveillance (e.g., transient conditions or other ongoing Surveillance or maintenance activities). The 25% extension does not significantly degrade the reliability that results from performing the Surveillance at its specified Frequency. This is based on the recognition that the most probable result of any particular Surveillance being performed is the verification of conformance with the SRs. The exceptions to SR 3.0.2 are those Surveillances for which the 25% extension of the interval specified in the Frequency does not apply. These exceptions are stated in the individual Specifications as a Note in the Frequency stating, "SR 3.0.2 is not applicable." As stated in SR 3.0.2, the 25% extension also does not apply to the initial portion of a periodic Completion Time that requires performance on a "once per…" basis. The 25% extension applies to each performance after the initial performance. The initial performance of the Required Action, whether it is a particular Surveillance or some other remedial action, is considered a single action with a single Completion time. One reason for not allowing the 25% extension to this Completion Time is that such an action usually verifies that no loss of function has occurred by checking the status of redundant or diverse components or accomplishes the function of the affected equipment in an alternative manner.

(continued)

SR 3.0.2 (continued)

The provisions of SR 3.0.2 are not intended to be used repeatedly, merely as an operational convenience to extend Surveillance intervals or periodic Completion Time intervals beyond those specified.

SR 3.0.3

SR 3.0.3 establishes the flexibility to defer declaring affected equipment as not meeting the LCO or an affected variable outside the specified limits when a Surveillance has not been completed within the specified Frequency. A delay period of up to 24 hours or up to the limit of the specified Frequency, whichever is less, applies from the point in time that it is discovered that the Surveillance has not been performed in accordance with SR 3.0.2, and not at the time that the specified Frequency was not met.

This delay period provides adequate time to complete Surveillances that have been missed. This delay period permits the completion of a Surveillance before complying with Required Actions or other remedial measures that might preclude completion of the Surveillance.

The basis for this delay period includes: consideration of facility conditions, adequate planning, availability of personnel, the time required to perform the Surveillance, the safety significance of the delay in completing the required Surveillance, and the recognition that the most probable result of any particular Surveillance being performed is the verification of conformance with the requirements. When a Surveillance with a Frequency, based not on time intervals, but upon specified NAC-UMS® SYSTEM conditions, is discovered not to have been performed when specified, SR 3.0.3 allows the full delay period of 24 hours to perform the Surveillance.

SR 3.0.3 also provides a time limit for completion of Surveillances that become applicable as a consequence of changes in the specified conditions in the Applicability imposed by the Required Actions.

Failure to comply with specified Frequencies for SRs is expected to be an infrequent occurrence. Use of the delay period established by SR 3.0.3 is a flexibility, which is not intended to be used as an operational convenience to extend Surveillance intervals.

(continued)

SR 3.0.3 (continued)

If a Surveillance is not completed within the allowed delay period, then the equipment is considered to not meet the LCO or the variable is considered outside the specified limits and the Completion Times of the Required Actions for the applicable LCO Conditions begin immediately upon expiration of the delay period. If a Surveillance is failed within the delay period, then the equipment does not meet the LCO, or the variable is outside the specified limits and the Completion Times of the Required Actions for the applicable LCO Conditions begin immediately upon the failure of the Surveillance.

Completion of the Surveillance within the delay period allowed by this Specification, or within the Completion Time of the ACTIONS, restores compliance with SR 3.0.1.

SR 3.0.4

SR 3.0.4 establishes the requirement that all applicable SRs must be met before entry into a specified condition in the Applicability.

This Specification ensures that system and component requirements and variable limits are met before entry into specified conditions in the Applicability for which these systems and components ensure safe operation of NAC-UMS® SYSTEM activities.

The provisions of this Specification should not be interpreted as endorsing the failure to exercise the good practice of restoring systems or components before entering an associated specified condition in the Applicability.

However, in certain circumstances, failing to meet an SR will not result in SR 3.0.4 restricting a change in specified condition. When a system, subsystem, division, component, device, or variable is outside its specified limits, the associated SR(s) are not required to be performed per SR 3.0.1, which states that Surveillances do not have to be performed on equipment that has been determined to not meet the LCO.

(continued)

SR 3.0.4 (continued)

When equipment does not meet the LCO, SR 3.0.4 does not apply to the associated SR(s), since the requirement for the SR(s) to be performed is removed. Therefore, failing to perform the Surveillance(s) within the specified Frequency does not result in a SR 3.0.4 restriction to changing specified conditions of the Applicability. However, since the LCO is not in this situation, LCO 3.0.4 will govern any restrictions that may be (or may not) apply to specified condition changes.

The provisions of SR 3.0.4 shall not prevent changes in specified conditions in the Applicability that are required to comply with ACTIONS. In addition, the provisions of LCO 3.0.4 shall not prevent changes in specified conditions in the Applicability that are related to the unloading of the NAC-UMS® SYSTEM.

The precise requirements for performance of SRs are specified such that exceptions to SR 3.0.4 are not necessary. The specific time frames and conditions necessary for meeting the SRs are specified in the Frequency, in the Surveillance, or both. This allows performance of Surveillances, when the prerequisite condition(s) specified in a Surveillance procedure require entry into the specified condition in the Applicability of the associated LCO, prior to the performance or completion of a Surveillance. A Surveillance that could not be performed until after entering LCO Applicability, would have its Frequency specified such that is not "due" until the specific conditions needed are met.

Alternately, the Surveillance may be stated in the form of a Note as not required (to be met or to be performed) until a particular event, condition, or time has been reached. Further discussion of the specific formats of SRs' annotation is found in Section 1.4, Frequency.

C 3.1 NAC-UMS® SYSTEM Integrity
C 3.1.1 CANISTER Maximum Time in Vacuum Drying
BASES

BACKGROUND

(Not applicable to the UNITAD STORAGE SYSTEM. There are no vacuum drying time limits for the UNITAD STORAGE SYSTEM.)

A TRANSFER CASK with an empty CANISTER is placed into the spent fuel pool and loaded with fuel assemblies meeting the requirements of the Approved Contents limits. A shield lid is then placed on the CANISTER. The TRANSFER CASK and CANISTER are raised out of the spent fuel pool. The TRANSFER CASK and CANISTER are then moved to a preparation area, where dose rates are measured. The CANISTER shield lid is welded to the CANISTER shell, and the lid weld is examined and pressure tested. The water is drained from the CANISTER, and CANISTER cavity vacuum drying is performed. The CANISTER cavity is then backfilled with helium, and the CANISTER drain and vent port covers are installed, welded and examined. The shield lid welds are then helium leak tested using the evacuated envelope method, per ANSI N14.5. The structural lid is installed, welded and examined. Dose and contamination measurements are completed prior to moving the TRANSFER CASK and CANISTER in position to transfer the CANISTER to the CONCRETE CASK. After the CANISTER is transferred, the CONCRETE CASK is then moved to the ISFSI. Average CONCRETE CASK dose rates are measured at the ISFSI pad.

Limiting the elapsed time from the end of CANISTER draining operations through dryness verification testing and subsequent backfilling of the CANISTER with helium ensures that the short-term temperature limits established in the Safety Analyses Report for the spent fuel cladding and CANISTER materials are not exceeded and that the test duration of 30 days (720 hours) considered in PNL-4835 for zirconium alloy clad fuel for storage in air is not exceeded.

A CANISTER containing a fuel assembly with burnup greater than 45 GWd/MTU is limited to nine (9) or fewer cooling/vacuum drying cycles performed in accordance with LCO 3.1.1.2. Each cooling/ vacuum drying cycle will exceed the cladding temperature change limit of 117°F (65°C). Excessive cladding temperature cycles (>10) of high burnup fuel could result in undesirable hydride reorientation as described in ISG-11, Revision 3, "Cladding Considerations for the Transportation and Storage of Spent Fuel," and reported by F. Kammenzind, B. M. Berquist and R. Bajaj in "The Long Range Migration of Hydrogen Through Zircaloy in Response to Tensile and Compressive Stress Gradients."

(continued)

APPLICABLE SAFETY ANALYSIS

(Not applicable to the UNITAD STORAGE SYSTEM. There are no vacuum drying time limits for the UNITAD STORAGE SYSTEM.)

Limiting the total time for loaded CANISTER vacuum drying operations ensures that the short-term temperature limits for the fuel cladding and CANISTER materials are not exceeded. If vacuum drying operations are not completed in the required time period, the CANISTER is backfilled with helium and cooled for a minimum of 24 hours of in-pool cooling or forced air cooling.

Analyses reported in the Safety Analysis Report conclude that spent fuel cladding and CANISTER material short-term temperature limits will not be exceeded for total elapsed time in the vacuum drying operation and in the TRANSFER CASK with the CANISTER filled with helium. Since the rate of heat up is slower for lower total heat loads, the time required to reach component limits is longer than for the design basis heat load. Consequently, longer time limits are specified for heat loads below the design basis for the PWR and BWR fuel configurations as shown in LCO 3.1.1. As shown in the LCO, for total heat loads not specified, the time limit for the next higher specified heat load is conservatively applied. Analyses show that the fuel cladding and CANISTER component temperatures are below the allowable temperatures for the time durations specified from the completion of CANISTER draining, or from the end of in-pool cooling or forced air cooling, through the completion of vacuum drying, dryness verification testing per LCO 3.1.2, and the helium backfill process per LCO 3.1.3[1].

Following completion of helium backfill, the fuel cladding and CANISTER temperatures are also maintained within allowable limits for the time(s) specified in LCO 3.1.4 for the helium-filled CANISTER in the TRANSFER CASK through completion of the transfer of the CANISTER to the CONCRETE CASK.

(continued)

LCO (Not applicable to the UNITAD STORAGE SYSTEM. There are no vacuum drying time limits for the UNITAD STORAGE SYSTEM.)	Limiting the length of time for vacuum drying operations through completion of the helium backfill operations for the CANISTER ensures that the spent fuel cladding and CANISTER material temperatures remain below the short-term temperature limits for the NAC-UMS® SYSTEM. Limiting a CANISTER containing a fuel assembly with burnup greater than 45 GWd/MTU to nine (9) or fewer cooling/vacuum drying cycles, per LCO 3.1.1.2, where the fuel cladding temperature change is greater than 117°F (65°C) controls hydride reorientation, maintains fuel rod cladding structural integrity and assures fuel retrievability.
APPLICABILITY (Not applicable to the UNITAD STORAGE SYSTEM. There are no vacuum drying time limits for the UNITAD STORAGE SYSTEM.)	The elapsed time restrictions for vacuum drying operations on a loaded CANISTER apply during LOADING OPERATIONS from the completion of CANISTER draining operations through completion of dryness verification testing per LCO 3.1.2 and the completion of the helium backfill process per LCO 3.1.3[(1)]. LCO 3.1.1 is not applicable to TRANSPORT OPERATIONS or STORAGE OPERATIONS.
ACTIONS (Not applicable to the UNITAD STORAGE SYSTEM. There are no vacuum drying time limits for the UNITAD STORAGE SYSTEM.)	A note has been added to the ACTIONS, which states that, for this LCO, separate Condition entry is allowed for each NAC-UMS® SYSTEM. This is acceptable, since the Required Actions for each Condition provide appropriate compensatory measures for each NAC-UMS® SYSTEM not meeting the LCO. Subsequent NAC-UMS® SYSTEMS that do not meet the LCO are governed by subsequent Condition entry and application of associated Required Actions. <u>A.1</u> If the LCO time limit is exceeded, the CANISTER will be backfilled with helium to a pressure of 0 psig (+1,-0). <u>AND</u>

(continued)

ACTIONS
(continued)

A.2.1.1
The TRANSFER CASK containing the loaded CANISTER shall be placed in the spent fuel pool. For in-pool cooling operations with the TRANSFER CASK and loaded CANISTER submerged, the annulus fill system is not required to be operating. If only the loaded CANISTER is submerged for in-pool cooling, the annulus fill system is required to be operating.

AND

A.2.1.2
The TRANSFER CASK and loaded CANISTER shall be maintained in the spent fuel pool with the water level above the top of the CANISTER, and a maximum water temperature of 100°F for a minimum of 24 hours prior to the restart of LOADING OPERATIONS.

OR

A.2.2.1
A cooling air flow of 375 CFM at a maximum temperature of 76°F shall be initiated. The airflow will be routed to the annulus fill/drain lines of the TRANSFER CASK and will flow through the annulus and cool the CANISTER.

AND

A.2.2.2
The cooling air flow shall be maintained for a minimum of 24 hours prior to restart of LOADING OPERATIONS.

(continued)

SURVEILLANCE REQUIREMENTS

(Not applicable to the UNITAD STORAGE SYSTEM. There are no vacuum drying time limits for the UNITAD STORAGE SYSTEM.)

SR 3.1.1.1

The elapsed time shall be monitored from completion of CANISTER draining through completion of the vacuum dryness verification testing per LCO 3.1.2 and completion of the helium backfill process per LCO 3.1.3[(1)]. Monitoring the elapsed time ensures that if the drying process is not completed in the prescribed time, the CANISTER can be backfilled with helium and in-pool or forced air cooling operations initiated in a timely manner during LOADING OPERATIONS to prevent fuel cladding and CANISTER materials from exceeding short-term temperature limits.

SR 3.1.1.2

The elapsed time shall be monitored from the end of in-pool cooling or forced air cooling of the CANISTER through completion of vacuum dryness verification testing per LCO 3.1.2 and the completion of the helium backfill process per LCO 3.1.3[(1)]. Monitoring the elapsed time ensures that if the drying process is not completed in the prescribed time, the CANISTER can be backfilled with helium and in-pool or forced air cooling initiated in a timely manner during LOADING OPERATIONS to prevent the fuel cladding and CANISTER materials from exceeding short-term temperature limits.

REFERENCES

1. FSAR Sections 4.4 and 8.1.

Note:
(1) LCO 3.1.1, SR 3.1.1.1 and SR 3.1.1.2 specify time limitations and monitoring requirements for the allowable duration(s) from completion of draining of the CANISTER, or from the completion of in-pool or forced air cooling of the CANISTER, through completion of vacuum drying testing and the "introduction" of helium. Clarifications have been added to the Bases of LCO 3.1.1 to highlight that the introduction and start of helium backfill defines the system configuration that is established following completion of final helium pressure adjustment of the CANISTER as specified in LCO 3.1.3.

C 3.1 NAC-UMS® SYSTEM Integrity

C 3.1.2 CANISTER Vacuum Drying Pressure

BASES

BACKGROUND	A TRANSFER CASK with an empty CANISTER is placed into the spent fuel pool and loaded with fuel assemblies meeting the requirements of the Approved Contents Limits. A shield lid (closure lid for the UNITAD STORAGE SYSTEM) is then placed on the CANISTER. The TRANSFER CASK and CANISTER are raised out of the spent fuel pool. The TRANSFER CASK and CANISTER are then moved to a preparation area, where dose rates are measured. The CANISTER shield lid (closure lid for the UNITAD STORAGE SYSTEM) is welded to the CANIS TER shell, and the lid weld is examined and pressure tested. The water is drained from the CANISTER, and CANISTER cavity vacuum drying is performed. The CANISTER cavity is then backfilled with helium, and the CANISTER drain and vent port covers are installed, welded and examined. The shield lid weld is then helium leak tested using the evacuated envelope method, per ANSI N14.5. The structural lid is installed, welded and examined. (Not applicable for the UNITAD STORAGE SYSTEM. For the UNITAD STORAGE SYSTEM, the closure ring is welded to the closure lid and the CANISTER shell and the welds are examined.) Dose and contamination measurements are completed prior to moving the TRANSFER CASK and CANISTER in position to transfer the CANISTER to the CONCRETE CASK. After the CANISTER is transferred, the CONCRETE CASK is then moved to the ISFSI. Average CONCRETE CASK dose rates are measured at the ISFSI pad. CANISTER cavity vacuum drying is utilized to remove residual moisture from the CANISTER cavity after the water is drained from the CANISTER. Any water not drained from the CANISTER cavity evaporates due to the vacuum. This is aided by the temperature increase, due to the heat generation of the fuel.
APPLICABLE SAFETY ANALYSIS	The confinement of radioactivity (including fission product gases, fuel fines, volatiles, and crud) during the storage of design basis spent fuel in the CANISTER is ensured by the multiple confinement boundaries and systems. The barriers relied on are: the fuel pellet matrix, the metallic fuel cladding tubes where the fuel pellets are contained, and the CANISTER where the fuel assemblies are stored. Long-term integrity of the fuel and cladding depends on limiting the fuel cladding temperatures, the total number of thermal cycles (for high burnup fuel only), and establishing and maintaining an inert atmosphere in the CANISTER. This is accomplished by removing water from the CANISTER and backfilling the cavity with helium. The thermal analysis assumes that the CANISTER cavity is dried and filled with helium.

(continued)

APPLICABLE SAFETY ANALYSIS (continued)	The heat-up and thermal cycling of the CANISTER and contents will occur during CANISTER vacuum drying, but is controlled by LCO 3.1.1. Dryness of the CANISTER (e.g., no free water) is verified by holding a vacuum pressure below or equal to a selected pressure for a specified period of time. The vacuum pressure selected for this verification is related to the temperature of the environment the CANISTER is in while vacuum drying (i.e., either the spent fuel pool (SFP) water temperature for CANISTERS vacuum dried in the SFP, or the cask preparation area ambient air temperature for CANISTERS vacuum dried outside the SFP). The nominal vacuum pressure selected for the verification in the LCO is 10 mm of Hg, which corresponds to approximately one-half of the vapor pressure of water at 70°F. The temperature of the drying environment at facilities loading CANISTERS is expected to exceed this temperature under most circumstances. In the event that either SFP water temperature (for CANISTERS vacuum dried in the SFP) or the cask preparation area ambient air temperature (for CANISTERS vacuum dried outside the SFP) is below 65°F, a lower vacuum pressure of 5 mm of Hg shall be used as the test criterion. For either verification, a 10-minute hold period has been selected. Holding the vacuum pressure below 10 mm of Hg for 10 minutes (or under 5 mm at SFP or ambient temperatures <65°F), with the CANISTER isolated from the vacuum pump and the pump turned off, demonstrates that there is no free water in the CANISTER, since the presence of any significant free water would result in the vacuum pressure increasing in a short period of time to the vapor pressure corresponding to the average temperature of the CANISTER and contents, which is significantly greater than the selected vacuum pressure.
LCO	A vacuum pressure of ≤10 mm of mercury, as specified in this LCO, indicates that liquid water has evaporated and been removed from the CANISTER cavity. Removing water from the CANISTER cavity helps to ensure the long-term maintenance of fuel cladding integrity.
APPLICABILITY (NAC-UMS SYSTEM, including the UNITAD STORAGE SYSTEM)	Cavity vacuum drying is performed during LOADING OPERATIONS before the TRANSFER CASK holding the CANISTER is moved to transfer the CANISTER into the CONCRETE CASK. Therefore, the vacuum requirements do not apply after the CANISTER is backfilled with helium and leak tested prior to TRANSPORT OPERATIONS and STORAGE OPERATIONS.
ACTIONS	A note has been added to the ACTIONS, which states that, for this LCO, separate Condition entry is allowed for each CANISTER. This is acceptable, since the Required Actions for each Condition provide appropriate compensatory measures for each CANISTER not meeting the LCO. Subsequent CANISTERs that do not meet the LCO are governed by subsequent Condition entry and application of associated Required Actions.

(continued)

ACTIONS (continued)	A.1 If the CANISTER cavity vacuum drying pressure limit cannot be met, actions must be taken to meet the LCO. Failure to successfully complete cavity vacuum drying could have many causes, such as failure of the vacuum drying system, inadequate draining, ice clogging of the drain lines, or leaking CANISTER welds. The Completion Time is sufficient to determine and correct most failure mechanisms. Excessive heat-up and thermal cycling of the CANISTER and contents is precluded by LCO 3.1.1. B.1 If the CANISTER fuel cavity cannot be successfully vacuum dried, the fuel must be placed in a safe condition. Corrective actions may be taken after the fuel is placed in a safe condition to perform the A.1 action provided that the initial conditions for performing A.1 are met. A.1 may be repeated as necessary prior to performing B.1. The time frame for completing B.1 can not be extended by re-performing A.1. The Completion Time is reasonable, based on the time required to reflood the CANISTER, perform fuel cooldown operations, cut the shield lid weld, move the TRANSFER CASK into the spent fuel pool, and remove the CANISTER shield lid in an orderly manner and without challenging personnel.
SURVEILLANCE REQUIREMENTS (NAC-UMS SYSTEM, including the UNITAD STORAGE SYSTEM)	SR 3.1.2.1 The long-term integrity of the stored fuel is dependent on storage in a dry, inert environment. Cavity dryness is demonstrated by evacuating the cavity to a very low absolute pressure and verifying that the pressure remains below a specified vapor pressure for a specific period of time. A low vacuum pressure is an indication that the cavity is dry. The surveillance must be performed prior to TRANSPORT OPERATIONS, as the vacuum drying pressure must be achieved before the CANISTER is sealed. This allows sufficient time to backfill the CANISTER cavity with helium, while minimizing the time the fuel is in the CANISTER without water or the assumed inert atmosphere in the cavity.
REFERENCES	1. FSAR Sections 4.4, 7.1 and 8.1.

C 3.1 NAC-UMS® SYSTEM Integrity

C 3.1.3 CANISTER Helium Backfill Pressure

BASES

BACKGROUND

A TRANSFER CASK with an empty CANISTER is placed into the spent fuel pool and loaded with fuel assemblies meeting the requirements of the Approved Contents limits. A shield lid (closure lid for the UNITAD STORAGE SYSTEM) is then placed on the CANISTER. The TRANSFER CASK and CANISTER are raised out of the spent fuel pool. The TRANSFER CASK and CANISTER are then moved to a preparation area, where dose rates are measured. The CANISTER shield lid (closure lid for the UNITAD STORAGE SYSTEM) is welded to the CANIST ER shell, and the lid weld is examined and pressure tested. The water is drained from the CANISTER, and CANISTER cavity vacuum drying is performed and verified. The CANISTER cavity is then evacuated to ≤3 mm of mercury to remove any residual oxidizing gases and the cavity is backfilled with helium. The CANISTER drain and vent port covers are installed, welded and examined. The shield lid weld is then helium leak tested using the evacuated envelope method, per ANSI N14.5. The structural lid is installed, welded and examined. (Not applicable for the UNITAD STORAGE SYSTEM. For the UNITAD STORAGE SYSTEM the closure ring is welded to the closure lid and the CANISTER shell and the welds are examined.) Dose and contamination measurements are completed prior to moving the TRANSFER CASK and CANISTER in position to transfer the CANISTER to the CONCRETE CASK. After the CANISTER is transferred, the CONCRETE CASK is then moved to the ISFSI. Average CONCRETE CASK dose rates are measured at the ISFSI pad.

Evacuating and backfilling of the CANISTER cavity with helium removes residual oxidizing gases to ≤1 mole, promotes heat transfer from the spent fuel to the CANISTER structure and protects the fuel cladding. Providing a helium pressure equal to atmospheric pressure ensures that there will be no in-leakage of air over the life of the CANISTER, which might be harmful to the heat transfer features of the NAC-UMS® SYSTEM and harmful to the fuel.

APPLICABLE SAFETY ANALYSIS

The confinement of radioactivity (including fission product gases, fuel fines, volatiles, and crud) during the storage of spent fuel in the CANISTER is ensured by the multiple confinement boundaries and systems. The barriers relied on are: the fuel pellet matrix, the metallic fuel cladding tubes where the fuel pellets are contained, and the CANISTER where the fuel assemblies are stored. Long-term integrity of the fuel and cladding depends on the ability of the NAC-UMS® SYSTEM to remove heat from the CANISTER and

(continued)

APPLICABLE SAFETY ANALYSIS (continued)	reject it to the environment. This is accomplished by removing water from the CANISTER cavity and backfilling the cavity with an inert gas. The heat-up of the CANISTER and contents will continue following backfilling with helium, but is controlled by LCO 3.1.4. The thermal analyses of the CANISTER assume that the CANISTER cavity is dried and filled with dry helium.
LCO	Backfilling the CANISTER cavity with helium at a pressure equal to atmospheric pressure ensures that there is no air in-leakage into the CANISTER, which could decrease the heat transfer properties and result in increased cladding temperatures and damage to the fuel cladding over the storage period. The helium backfill pressure of 0 psig specified in this LCO was selected based on a minimum helium purity of 99.9% to ensure that the CANISTER internal pressure and heat transfer from the CANISTER to the environment are maintained consistent with the design and analysis basis of the CANISTER.
APPLICABILITY (NAC-UMS SYSTEM, including the UNITAD STORAGE SYSTEM)	Helium backfill is performed during LOADING OPERATIONS, before the TRANSFER CASK and CANISTER are moved to the CONCRETE CASK for transfer of the CANISTER. Therefore, the backfill pressure requirements do not apply after the CANISTER is backfilled with helium and leak tested prior to TRANSPORT OPERATIONS and STORAGE OPERATIONS.
ACTIONS	A note has been added to the ACTIONS, which states that, for this LCO, separate Condition entry is allowed for each CANISTER. This is acceptable, since the Required Actions for each Condition provide appropriate compensatory measures for each CANISTER not meeting the LCO. Subsequent CANISTERs that do not meet the LCO are governed by subsequent condition entry and application of associated Required Actions. <u>A.1</u> If the backfill pressure cannot be established within limits, actions must be taken to meet the LCO. The Completion Time is sufficient to determine and correct most failures, which would prevent backfilling of the CANISTER cavity with helium. These actions include identification and repair of helium leak paths or replacement of the helium backfill equipment. In addition, the CANISTER can be maintained in a safe condition based on the use of forced air cooling or water cooling.

(continued)

ACTIONS (continued)	B.1 If the CANISTER cavity cannot be backfilled with helium to the specified pressure, the fuel must be placed in a safe condition. Corrective actions may be taken after the fuel is placed in a safe condition to perform the A.1 action provided that the initial conditions for performing A.1 are met. A.1 may be repeated as necessary prior to performing B.1. The time frame for completing B.1 cannot be extended by reperforming A.1. The Completion Time is reasonable based on the time required to re-flood the CANISTER, perform cooldown operations, cut the CANISTER shield lid (closure lid for the UNITAD STORAGE SYSTEM) weld, move the TRANSFER CASK and CANISTER into the spent fuel pool, remove the CANISTER shield lid (closure lid for the UNITAD STORAGE SYSTEM), and remove the spent fuel assemblies in an orderly manner and without challenging personnel.
SURVEILLANCE REQUIREMENTS (NAC-UMS SYSTEM, including the UNITAD STORAGE SYSTEM)	SR 3.1.3.1 The long-term integrity of the stored fuel is dependent on storage in a dry, inert atmosphere and maintenance of adequate heat transfer mechanisms. Filling the CANISTER cavity with helium at a pressure within the range specified in this LCO will ensure that there will be no air in-leakage, which could potentially damage the fuel. This pressure of helium gas is sufficient to maintain fuel cladding temperatures within acceptable levels. Backfilling of the CANISTER cavity must be performed successfully on each CANISTER before placing it in storage. The surveillance must verify that the CANISTER helium backfill pressure is within the limit specified prior to installation of the structural lid.
REFERENCES	1. FSAR Sections 4.4, 7.1 and 8.1.

C 3.1 NAC-UMS® SYSTEM Integrity

C 3.1.4 CANISTER Maximum Time in the TRANSFER CASK

BASES

BACKGROUND

A TRANSFER CASK with an empty CANISTER is placed into the spent fuel pool and loaded with fuel assemblies meeting the requirements of the Approved Contents limits. A shield lid (closure lid for the UNITAD STORAGE SYSTEM) is then placed on the CANISTER. The TRANSFER CASK and CANISTER are raised out of the spent fuel pool. The TRANSFER CASK and CANISTER are then moved to a preparation area, where dose rates are measured. The CANISTER shield lid (closure lid for the UNITAD STORAGE SYSTEM) is welded to the CANISTER shell, and the lid weld is examined and pressure tested. The water is drained from the CANISTER, and CANISTER cavity vacuum drying is performed. The CANISTER cavity is then backfilled with helium, and the CANISTER drain and vent port covers are installed, welded and examined. The shield lid weld is then helium leak tested using the evacuated envelope method, per ANSI N14.5. The structural lid is installed, welded and examined. (Not applicable for the UNITAD STORAGE SYSTEM. For the UNITAD STORAGE SYSTEM the closure ring is welded to the closure lid and the CANISTER shell and the welds are examined.) Dose and contamination measurements are completed prior to moving the TRANSFER CASK and CANISTER in position to transfer the CANISTER to the CONCRETE CASK. After the CANISTER is transferred, the CONCRETE CASK is then moved to the ISFSI. Average CONCRETE CASK dose rates are measured at the ISFSI pad.

Backfilling the CANISTER cavity with helium promotes heat transfer from the fuel and the inert atmosphere protects the fuel cladding. The cumulative time a loaded, helium backfilled CANISTER may remain in the TRANSFER CASK is limited to 600 hours. This limit ensures that the test duration of 30 days (720 hours) considered in PNL-4835 for zirconium alloy clad fuel for storage in air is not exceeded and ensures that the TRANSFER CASK is used as intended. The time limit is established to preclude long-term storage of a loaded CANISTER in the TRANSFER CASK.

For the NAC-UMS SYSTEM (Not applicable to the UNITAD STORAGE SYSTEM) intermediate time limits are established for CANISTERS with heat loads above 20 kW (PWR) or 17 kW (BWR) if they are not in either forced air cooling or in-pool cooling. These intermediate limits assure that the short-term temperature limits established in the Safety Analysis Report for the spent fuel cladding and CANISTER materials are not exceeded. Placing the CANISTER in either forced air cooling or in-pool cooling for a minimum of 24 hours maintains temperatures within the short-term limits. For heat loads less than or equal to 20kW (PWR) or 17kW (BWR), neither forced air cooling nor in-pool cooling is required.

(continued)

CANISTER Maximum Time in the TRANSFER CASK
C 3.1.4

APPLICABLE SAFETY ANALYSIS

For the NAC-UMS SYSTEM (Not applicable to the UNITAD STORAGE SYSTEM) analyses reported in the Safety Analysis Report conclude that for heat loads greater than 20 kW (PWR) or greater than 17 kW (BWR), spent fuel cladding and CANISTER material short-term temperature limits will not be exceeded for the total elapsed times specified in LCO 3.1.4. As shown in the LCO, for total heat loads not specified, the time limit for the next higher specified heat load is conservatively applied. The thermal analysis shows that the fuel cladding and CANISTER component temperatures are below their allowable temperatures for the time durations specified, with the CANISTER in the TRANSFER CASK and backfilled with helium, after completion of 24 hours of in- pool cooling or forced air cooling. For lower heat loads, the steady state fuel cladding and component temperatures are below the allowable temperatures.

The basis for forced air cooling is an inlet maximum air temperature of 76°F which is the maximum normal ambient air temperature in the thermal analysis. The specified 375 CFM air flow rate exceeds the CONCRETE CASK natural convective cooling flow rate by a minimum of 10 percent. This comparative analysis conservatively excludes the higher flow velocity resulting from the smaller annulus between the TRANSFER CASK and CANISTER, which would result in improved heat transfer from the CANISTER.

From calculated temperatures reported in the Safety Analysis Report, it can be concluded that spent fuel cladding and CANISTER material short-term temperature limits will not be exceeded for a total elapsed time of greater than 20 hours for PWR fuel or 30 hours for BWR fuel for high heat loads, if the loaded CANISTER backfilled with helium is in the TRANSFER CASK. A 2 hour completion time is provided to establish in-pool or forced airflow cooling to ensure cooling of the CANISTER.

For heat loads of 20 kW or less (PWR), or 17 kW or less (BWR), and with the CANISTER backfilled with helium, the analysis shows that the fuel cladding and CANISTER components reach a steady-state temperature below the short-term allowable temperatures. Therefore, the time in the TRANSFER CASK is limited to 600 hours. For heat loads greater than 20 kW (PWR) or greater than 17 kW (BWR), and if the intermediate time is exceeded, the analysis shows that if in-pool cooling or forced air cooling at 375 CFM with air at 76°F is used, the temperatures of the fuel cladding and CANISTER components will not exceed short-term temperature limits.

(continued)

APPLICABLE SAFETY ANALYSIS (continued)	This limit ensures that the test duration of 30 days (720 hours) considered in PNL-4835 for zirconium alloy clad fuel for storage in air is not exceeded and ensures that the TRANSFER CASK is used as intended. Since the 600 hours is significantly less than the 720 hours considered in PNL-4835, operation in the TRANSFER CASK to this period is acceptable. Since the cooling provided by the forced air is equivalent to the passive cooling provided by the CONCRETE CASK and TRANSPORT CASK, relocation of a loaded and helium-filled CANISTER to a CONCRETE CASK or TRANSPORT CASK ensures that the fuel cladding and CANISTER component short-term temperature limits are not exceeded.
LCO	For the UNITAD STORAGE SYSTEM heat loads less than or equal to 22 kW; and for the NAC-UMS SYSTEM PWR heat loads less than or equal to 20 kW, and BWR heat loads less than or equal to 17 kW, the thermal analysis shows that the presence of helium in the CANISTER is sufficient to maintain the fuel cladding and CANISTER component temperatures below the short-term temperature limits. Therefore, forced air cooling or in-pool cooling is not required for these heat load conditions. For higher heat loads of these fuels, as shown in the LCO, once forced air cooling or in-pool cooling is established, the amount of time the CANISTER resides in the TRANSFER CASK is not limited by the intermediate time limits, since the cooling provided by the forced air or water is equivalent to the passive cooling that is provided by the CONCRETE CASK or TRANSPORT CASK. If forced air flow or in-pool cooling is continuously maintained for a period of 24 hours, or longer, then the temperatures of the spent fuel cladding and CANISTER components are at, or below, the values calculated for the CONCRETE CASK normal conditions. Therefore, forced air cooling or in-pool cooling may be ended, allowing a new entry into Condition A of this LCO. This provides a new period in which continuation of LOADING OPERATIONS, TRANSFER OPERATIONS or UNLOADING OPERATIONS for high heat load PWR and BWR fuel may occur. Similarly, in LOADING OPERATIONS, TRANSFER OPERATIONS or UNLOADING OPERATIONS for heat loads up to the design basis, continuous forced air cooling or in-pool cooling maintains the fuel cladding and CANISTER component temperatures below the short- term temperature limits. Therefore, the CANISTER may remain in the TRANSFER CASK for up to 600 hours, where the time limit is based on the test duration of 30 days (720 hours) considered in PNL-4835 for zirconium alloy clad fuel for storage in air rather than on temperature limits.

CANISTER Maximum Time in the TRANSFER CASK
C 3.1.4

APPLICABILITY (UNITAD STORAGE SYSTEM not included)	For LOADING OPERATIONS, the elapsed time restrictions on the loaded CANISTER apply from the completion point of the CANISTER helium backfilling through completion of the transfer from the TRANSFER CASK to the CONCRETE CASK and installing the CONCRETE CASK shield plug and cask lid. For TRANSFER OPERATIONS, the elapsed time restrictions on the loaded CANISTER apply from the completion point of the closing of the TRANSFER CASK shield doors through completion of the unloading of the CANISTER from the TRANSFER CASK. For UNLOADING OPERATIONS, the elapsed time restrictions on the loaded CANISTER apply from the completion point of the closing of the TRANSFER CASK shield doors through initiation of CANISTER cooldown.
ACTIONS	A note has been added to the ACTIONS, which states that, for this LCO, separate Condition entry is allowed for each NAC-UMS® SYSTEM. This is acceptable, since the Required Actions for each Condition provide appropriate compensatory measures for each NAC-UMS® SYSTEM not meeting the LCO. Subsequent NAC-UMS® SYSTEMS that do not meet the LCO are governed by subsequent Condition entry and application of associated Required Actions. A note has been added to Condition A that reminds users that all time spent in Condition A is included in the 600-hour cumulative limit. If LCO 3.1.4 intermediate time is exceeded for the NAC-UMS SYSTEM (Not applicable to the UNITAD STORAGE SYSTEM): <u>A.1.1</u> The TRANSFER CASK containing the loaded CANISTER shall be placed in the spent fuel pool. For in-pool cooling operations with the TRANSFER CASK and loaded CANISTER submerged, the annulus fill system is not required to be operating. If only the loaded CANISTER is submerged for in-pool cooling, the annulus fill system is required to be operating. <u>AND</u> <u>A.1.2</u> The TRANSFER CASK and a loaded CANISTER shall be maintained in the spent fuel pool having a maximum water temperature of 100°F for a minimum of 24 hours prior to restart of LOADING OPERATIONS, TRANSFER OPERATIONS or UNLOADING OPERATIONS.

(continued)

ACTIONS (continued)	OR A.2.1 A cooling air flow of 375 CFM at a maximum temperature of 76° F shall be initiated. The airflow will be routed to the annulus fill/drain lines in the TRANSFER CASK and will flow through the annulus and cool the CANISTER. AND A.2.2 The cooling air flow shall be maintained for a minimum of 24 hours prior to restart of LOADING OPERATIONS, TRANSFER OPERATIONS or UNLOADING OPERATIONS. If the LCO 3.1.4. 600-hour cumulative time limit is exceeded: B.1 The CANISTER shall be placed in a CONCRETE CASK. OR B.2 The CANISTER shall be placed in a TRANSPORT CASK. OR B.3 The CANISTER shall be unloaded. The 5-day Completion Time for Required Actions B.1, B.2, and B.3 assures that the PNL-4835 30-day test duration used to establish the LCO limit will not be exceeded, taking into account the 600 hours allowed by the LCO.
SURVEILLANCE REQUIREMENTS (UNITAD STORAGE SYSTEM not included)	SR 3.1.4.1 The elapsed time from entry into the LCO conditions of Applicability until placement of the CANISTER in a CONCRETE CASK or TRANSPORT CASK, or until CANISTER cooldown is initiated for UNLOADING OPERATIONS shall be monitored. This SR ensures that the fuel cladding and CANISTER component temperature limits are not exceeded.
REFERENCES	1. FSAR Sections 4.4, 8.1 and 8.2.

C 3.1 NAC-UMS® SYSTEM Integrity

C 3.1.5 CANISTER Helium Leak Rate (Not applicable to the UNITAD STORAGE SYSTEM)

BASES

BACKGROUND

A TRANSFER CASK with an empty CANISTER is placed into the spent fuel pool and loaded with fuel assemblies meeting the requirements of the Approved Contents limits. A shield lid (closure lid for the UNITAD STORAGE SYSTEM) is then placed on the CANISTER. The TRANSFER CASK and CANISTER are raised out of the spent fuel pool. The TRANSFER CASK and CANISTER are then moved to a preparation area, where dose rates are measured. The CANISTER shield lid (closure lid for the UNITAD STORAGE SYSTEM) is welded to the CANISTER shell, and the lid weld is examined and pressure tested. The water is drained from the CANISTER, and CANISTER cavity vacuum drying is performed. The CANISTER cavity is then backfilled with helium, and the CANISTER drain and vent port covers are installed, welded and examined. The shield lid (not applicable for the UNITAD STORAGE SYSTEM) weld is then helium leak tested using the evacuated envelope method, per ANSI N14.5. The structural lid is installed, welded and examined. CANISTER shell and the welds are examined. Dose and contamination measurements are completed prior to moving the TRANSFER CASK and CANISTER in position to transfer the CANISTER to the CONCRETE CASK. After the CANISTER is transferred, the CONCRETE CASK is then moved to the ISFSI. Average CONCRETE CASK dose rates are measured at the ISFSI pad.

Backfilling the CANISTER cavity with helium promotes heat transfer from the fuel to the CANISTER shell. The inert atmosphere protects the fuel cladding. Prior to transferring the CANISTER to the CONCRETE CASK, the CANISTER helium leak rate is verified to ensure that the fuel and helium backfill gas is confined and that there will be no credible leakage from the CANISTER.

APPLICABLE SAFETY ANALYSIS

The confinement of radioactivity (including fission product gases, fuel fines, volatiles, and crud) during the storage of spent fuel in the CANISTER is ensured by the multiple confinement boundaries and systems. The barriers relied on are: the fuel pellet matrix, the metallic fuel cladding tubes where the fuel pellets are contained, and the CANISTER where the fuel assemblies are stored. Long-term integrity of the fuel and cladding depends on maintaining an inert atmosphere, and maintaining the cladding temperatures below established long-term limits. This is accomplished by removing water from the CANISTER and backfilling the cavity with helium. The heat-up of the CANISTER and contents will continue following backfilling the cavity and leak testing the shield lid-to-shell weld, but is controlled by LCO 3.1.4.

For the UNITAD STORAGE SYSTEM, this helium leak test is not applicable based on the implementation of all design and fabrication requirements of ISG-15 and ISG-18 for the UNITAD SYSTEM CANISTER.

(continued)

LCO	Verifying that the CANISTER cavity helium leak rate is below the value specified in this LCO ensures that the CANISTER shield lid is sealed. Verifying the helium leak rate will also ensure that there will be no credible leakage from the CANISTER under off-normal or accident conditions.
APPLICABILITY (Not applicable to the UNITAD STORAGE SYSTEM)	The helium leak rate verification is performed during LOADING OPERATIONS before the TRANSFER CASK and integral CANISTER are moved for transfer operations to the CONCRETE CASK. TRANSPORT OPERATIONS would not commence if the CANISTER helium leak rate was not below the test sensitivity. Therefore, CANISTER leak rate testing is not required during TRANSPORT OPERATIONS or STORAGE OPERATIONS.
ACTIONS	A note has been added to the ACTIONS, which states that, for this LCO, separate Condition entry is allowed for each CANISTER. This is acceptable, since the Required Actions for each Condition provide appropriate compensatory measures for each CANISTER not meeting the LCO. Subsequent CANISTERs that do not meet the LCO are governed by subsequent Condition entry and application of associated Required Actions. <u>A.1</u> If the helium leak rate limit is not met, actions must be taken to meet the LCO. The Completion Time is sufficient to determine and correct most failures, which could cause a helium leak rate in excess of the limit. Actions to correct a failure to meet the helium leak rate limit would include, in ascending order of performance: 1) verification of helium leak test system performance; 2) inspection of weld surfaces to locate helium leakage paths using a helium sniffer probe; and 3) weld repairs, as required, to eliminate the helium leakage. Following corrective actions, the helium leak rate verification shall be reperformed.

(continued)

ACTIONS (continued) B.1

If the CANISTER leak rate cannot be brought within the limit, the fuel must be placed in a safe condition. Corrective actions may be taken after the fuel is placed in a safe condition to perform the A.1 action provided that the initial conditions for performing A.1 are met. A.1 may be repeated as necessary prior to performing B.1. The time frame for completing B.1 cannot be extended by reperforming A.1. The Completion Time is reasonable based on the time required to reflood the CANISTER, perform fuel cooldown operations, cut the CANISTER shield lid weld, move the TRANSFER CASK into the spent fuel pool, remove the CANISTER shield lid, and remove the spent fuel assemblies in an orderly manner and without challenging personnel.

SURVEILLANCE REQUIREMENTS (Not applicable to the UNITAD STORAGE SYSTEM)

SR 3.1.5.1

The primary design considerations of the CANISTER are that there will be no credible leakage and that the helium remains in the CANISTER during long-term storage. Long-term integrity of the stored fuel is dependent on storage in a dry, inert environment.

The helium leakage rate of each CANISTER shall be confirmed to meet the LCO prior to TRANSPORT OPERATIONS. The Surveillance Frequency allows sufficient time to backfill the CANISTER cavity with helium and to perform the leak test, while minimizing the time the fuel is in the CANISTER and loaded in the TRANSFER CASK.

REFERENCES

1. FSAR Sections 7.1 and 8.1.

C 3.1 NAC-UMS® SYSTEM Integrity

C 3.1.6 CONCRETE CASK Heat Removal System

BASES

BACKGROUND	The CONCRETE CASK Heat Removal System is a passive, air-cooled convective heat transfer system, which ensures that heat from the CANISTER is transferred to the environment by the upward flow of air through the CONCRETE CASK. Relatively cool air is drawn into the annulus between the CONCRETE CASK and the CANISTER through the four air inlets at the bottom of the CONCRETE CASK. The CANISTER transfers its heat from the CANISTER surface to the air via natural convection. The buoyancy created by the heating of the air creates a chimney effect and the air flows back into the environment through the four air outlets at the top of the CONCRETE CASK.
APPLICABLE SAFETY ANALYSIS	The thermal analyses of the CONCRETE CASK take credit for the decay heat from the spent fuel assemblies being ultimately transferred to the ambient environment surrounding the CONCRETE CASK. Transfer of heat away from the fuel assemblies ensures that the fuel cladding and CANISTER component temperatures do not exceed applicable limits. Under normal storage conditions, the four air inlets and four air outlets are unobstructed and full air flow (i.e., maximum heat transfer for the given ambient temperature) occurs. Analyses have been performed for the complete obstruction of all of the air inlets and outlets. The complete blockage of all air inlets and outlets stops air cooling of the CANISTER. The CANISTER will continue to radiate heat to the relatively cooler inner shell of the CONCRETE CASK. With the loss of air cooling, the CANISTER component temperatures will increase toward their respective short-term temperature limits. The limiting components are the CANISTER basket support and heat transfer disks, which, by analysis, approach their temperature limits in 24 hours, if no action is taken to restore air flow to the heat removal system. The maximum fuel clad temperatures remain below allowable accident limits for approximately six days (150 hours) with complete air flow blockage.
LCO	The CONCRETE CASK Heat Removal System must be verified to be OPERABLE to preserve the assumptions of the thermal analyses.

(continued)

LCO (continued)	Operability of the heat removal system ensures that the decay heat generated by the stored fuel assemblies is transferred to the environment at a sufficient rate to maintain fuel cladding and CANISTER component temperatures within design limits.
APPLICABILITY (NAC-UMS SYSTEM, including the UNITAD STORAGE SYSTEM)	The LCO is applicable during STORAGE OPERATIONS. Once a CONCRETE CASK containing a CANISTER loaded with spent fuel has been placed in storage, the heat removal system must be OPERABLE to ensure adequate heat transfer of the decay heat away from the fuel assemblies.
ACTIONS	A note has been added to ACTIONS that states for this LCO, separate Condition entry is allowed for each CONCRETE CASK. This is acceptable since the Required Actions for each Condition provide appropriate compensatory measures for each CONCRETE CASK not meeting the LCO. Subsequent CONCRETE CASKs that do not meet the LCO are governed by subsequent Condition entry and application of associated Required Actions. A.1 If the CONCRETE CASK heat removal system has been determined to not be OPERABLE, it must be restored to an analyzed safe status immediately, with adequate heat removal capability. Immediately, defined as the required action to be pursued without delay and in a controlled manner, provides a reasonable period of time (typically, one operating shift) to take action to remove the obstructions in the air flow path. In order to meet A.1, adequate heat removal capability must be verified to exist, either by visual observation of at least two unobstructed air inlet and outlet screens or by physically clearing any blockage from two air inlet and outlet screens, to prevent exceeding the short-term temperature limits. Thermal analysis of a fully blocked CONCRETE CASK shows that without adequate heat removal, the fuel cladding accident temperature limit could be exceeded over time. As a result, requiring immediate verification of adequate heat removal capability will ensure that the CONCRETE CASK and CANISTER components and the fuel cladding do not exceed their short-term temperature limits. The thermal analysis also shows that complete blockage of two air inlet and outlet screens results in no potential for exceeding accident fuel cladding, CONCRETE CASK or CANISTER component temperature limits. As a result, verifying that there are at least two unobstructed

(continued)

ACTIONS (continued)

air inlet and outlet screens will ensure that the accident temperature limits are not exceeded during the time that the remainder of the air linlet and outlet screens are returned to OPERABLE status.

AND

A.2

In addition to Required Action A.1, the fuel loading per the Approved Contents condition of the CoC is verified.

The Completion Time for this Required Action of 7 days will ensure that the CANISTER remains in a safe, analyzed condition.

AND

A.3

In addition to Required Actions A.1 and A.2 that ensure the adequate heat removal capability and verify the fuel loading, restoring the CONCRETE CASK Heat Removal System to OPERABLE is not an immediate concern. Therefore, restoring it within 25 days is considered a reasonable period of time.

B.1

If the Required Actions A.1, A.2 or A.3 cannot be met, an engineering evaluation is performed to verify that the CONCRETE CASK heat removal system is OPERABLE.

The Completion Time for this Required Action of 5 days will ensure that the CANISTER remains in a safe, analyzed condition.

OR

B.2

Place the affected NAC-UMS® SYSTEM or UNITAD STORAGE SYSTEM in a safe condition.

The Completion Time for this Required Action is 5 days. Requiring B.2 action completion within 5 days will ensure that the NAC-UMS® SYSTEM or UNITAD STORAGE SYSTEM is maintained in a safe condition.

(continued)

SURVEILLANCE REQUIREMENTS (NAC-UMS SYSTEM, including the UNITAD STORAGE SYSTEM)	SR 3.1.6.1 The long-term integrity of the stored fuel is dependent on the ability of the CONCRETE CASK to reject heat from the CANISTER to the environment. Visual observation that all four air inlet and outlet screens are unobstructed and intact ensures that air flow past the CANISTER is occurring and heat transfer is taking place. Complete blockage of one or more air inlet or outlet screens renders the heat removal system inoperable and this LCO is not met. Partial blockage of one or more air inlet or outlet screens does not constitute inoperability of the heat removal system. However, corrective actions should be taken promptly to remove the obstruction and restore full flow through the affected air inlet and outlet screens. Alternatively, based on the analyses, if the air temperature rise is less than the limits stated in the SR, adequate air flow and, therefore, adequate heat transfer is occurring to provide assurance of long-term fuel cladding integrity. The reference ambient temperature used to perform this Surveillance shall be measured at the ISFSI facility. The Frequency of 24 hours is reasonable based on the time necessary for CONCRETE CASK and CANISTER components to heat up to unacceptable temperatures assuming design basis heat loads, and allowing for corrective actions to take place upon discovery of the blockage of the air inlet and outlet screens. SR 3.1.6.2 The initial confirmation of the OPERABILITY of the CONCRETE CASK is established based on air temperature measurements at the CONCRETE CASK outlets and the ISFSI ambient, and verification that the air temperature rise is less than the limits stated in the SR. Following the initial confirmation, the continued OPERABILITY of the CONCRETE CASK shall be confirmed by one of the verification methods specified in SR 3.1.6.1. The specified Frequency of once between 5 and 30 days after beginning STORAGE OPERATIONS is reasonable and ensures that the CONCRETE CASK has reached thermal equilibrium and, therefore, the outlet air temperature measurements will reflect expected temperatures under normal operations. Completion of the measurements within 30 days of placement of the CONCRETE CASK into STORAGE OPERATIONS ensures that corrective actions can be taken to establish the OPERABLE status of the CONCRETE CASK within a reasonable period of time.
REFERENCES	1. FSAR Chapter 4 and Chapter 11, Section 11.1.2 and Section 11.2.13.

C 3.2 NAC-UMS® SYSTEM Radiation Protection

C 3.2.1 CANISTER Surface Contamination

BASES

BACKGROUND	A TRANSFER CASK containing an empty CANISTER is immersed in the spent fuel pool in order to load the spent fuel assemblies. The external surfaces of the CANISTER are maintained clean by the application of clean water to the annulus of the TRANSFER CASK. However, there is potential for the surface of the CANISTER to become contaminated with the radioactive material in the spent fuel pool water. Contamination exceeding LCO limits is removed prior to moving the CONCRETE CASK containing the CANISTER to the ISFSI in order to minimize the radioactive contamination to personnel or the environment. This allows the ISFSI to be entered without additional radiological controls to prevent the spread of contamination and reduces personnel dose due to the spread of loose contamination or airborne contamination. This is consistent with ALARA practices.
APPLICABLE SAFETY ANALYSIS	The radiation protection measures implemented at the ISFSI are based on the assumption that the exterior surfaces of the CANISTER are not significantly contaminated. Failure to decontaminate the surfaces of the CANISTER to below the LCO limits could lead to higher-than-projected occupational dose and potential site contamination.
LCO	Removable surface contamination on the exterior surfaces of the CANISTER is limited to 10,000 dpm/100 cm^2 from beta and gamma sources and 100 dpm/100 cm^2 from alpha sources for the NAC-UMS SYSTEM and 1,000 dpm/100 cm^2 from beta and gamma sources and 20 dpm/100 cm^2 from alpha sources for the UNITAD STORAGE SYSTEM. Only loose contamination is controlled, as fixed contamination will not result from the CANISTER loading process. Experience has shown that these limits are low enough to prevent the spread of contamination to clean areas and are significantly less than the levels that could cause significant personnel skin dose.

(continued)

LCO (continued)	LCO 3.2.1 requires removable contamination to be within the specified limits for the exterior surfaces of the CANISTER. Compliance with this LCO may be verified by direct and/or indirect methods. The location and number of CANISTER and TRANSFER CASK surface swipes used to determine compliance with this LCO are determined based on standard industry practice and the user's plant-specific contamination measurement program for objects of this size. The objective is to determine a removable contamination value representative of the entire CANISTER surface area, while implementing sound ALARA practices. Swipes and measurements of removable surface contamination levels on the interior surfaces of the TRANSFER CASK may be performed to verify the CANISTER LCO limits following transfer of the CANISTER to the CONCRETE CASK. These measurements will provide indirect indications regarding the removable contamination on the exterior surfaces of the CANISTER.
APPLICABILITY (NAC-UMS SYSTEM, including the UNITAD STORAGE SYSTEM)	Verification that the exterior surface contamination of the CANISTER is less than the LCO limits is performed during LOADING OPERATIONS. This occurs before TRANSPORT OPERATIONS and STORAGE OPERATIONS. Measurement of the CANISTER surface contamination is unnecessary during UNLOADING OPERATIONS, as surface contamination would have been measured prior to moving the subject CANISTER to the ISFSI.

(continued)

ACTIONS	A note has been added to the ACTIONS, which states that, for this LCO, separate Condition entry is allowed for each CANISTER LOADING OPERATION. This is acceptable, since the Required Actions for each Condition provide appropriate compensatory measures for each CANISTER not meeting the LCO. Subsequent CANISTERs that do not meet the LCO are governed by subsequent Condition entry and application of associated Required Actions. A.1 If the removable surface contamination of the CANISTER that has been loaded with spent fuel is not within the LCO limits, action must be initiated to decontaminate the CANISTER and bring the removable surface contamination to within limits. The Completion Time of prior TRANSPORT OPERATIONS is appropriate, given that the time needed to complete the decontamination is indeterminate and surface contamination does not affect the safe storage of the spent fuel assemblies.
SURVEILLANCE REQUIREMENTS (NAC-UMS SYSTEM, including the UNITAD STORAGE SYSTEM)	SR 3.2.1.1 This SR verifies (either directly or indirectly) that the removable surface contamination on the exterior surfaces of the CANISTER is less than the limits in the LCO. The Surveillance is performed using smear surveys to detect removable surface contamination. The Frequency requires performing the verification prior to initiating TRANSPORT OPERATIONS in order to confirm that the CANISTER can be moved to the ISFSI without spreading loose contamination.
REFERENCES	1. FSAR Section 8.1. 2. NRC IE Circular 81-07.

C 3.2 NAC-UMS® SYSTEM Radiation Protection

C 3.2.2 CONCRETE CASK Average Surface Dose Rates

BASES

BACKGROUND	The regulations governing the operation of an ISFSI set limits on the control of occupational radiation exposure and radiation doses to the general public (Ref. 1). Occupational radiation exposure should be kept as low as reasonably achievable (ALARA) and within the limits of 10 CFR Part 20. Radiation doses to the public are limited for both normal and accident conditions in accordance with 10 CFR 72.
APPLICABLE SAFETY ANALYSIS	The CONCRETE CASK average surface dose rates are not an assumption in any accident analysis, but are used to ensure compliance with regulatory limits on occupational dose and dose to the public.
LCO	The limits on CONCRETE CASK average surface dose rates are based on the Safety Analysis Report shielding analysis of the NAC-UMS® SYSTEM (Ref. 2). The limits are selected to minimize radiation exposure to the public and to maintain occupational dose ALARA to personnel working in the vicinity of the NAC-UMS® SYSTEM. The LCO specifies sufficient locations for taking dose rate measurements to ensure the dose rates measured are indicative of the effectiveness of the shielding materials.
APPLICABILITY (NAC-UMS SYSTEM, including the UNITAD STORAGE SYSTEM)	The CONCRETE CASK average surface dose rates apply during STORAGE OPERATIONS. These limits ensure that the CONCRETE CASK average surface dose rates during STORAGE OPERATIONS are bounded by the shielding safety analyses. Radiation doses during STORAGE OPERATIONS are monitored by the NAC-UMS® SYSTEM user in accordance with the plant-specific radiation protection program as required by 10 CFR 72.212(b)(6) and 10 CFR 20 (Reference 1).
ACTIONS	A note has been added to the ACTIONS, which states that, for this LCO, separate Condition entry is allowed for each loaded CONCRETE CASK. This is acceptable, since the Required Actions for each Condition provide appropriate compensatory measures for each CONCRETE CASK not meeting the LCO. Subsequent NAC-UMS®

(continued)

ACTIONS (continued)

SYSTEMs that do not meet the LCO are governed by subsequent Condition entry and application of associated Required Actions.

A.1

If the CONCRETE CASK average surface dose rates are not within limits, it could be an indication that a fuel assembly that did not meet the Approved Contents Limits in Section B2.0 of Appendix B was inadvertently loaded into the CANISTER. Administrative verification of the CANISTER fuel loading, by means such as review of video recordings and records of the loaded fuel assembly serial numbers, can establish whether a misloaded fuel assembly is the cause of the out-of-limit condition. The Completion time is based on the time required to perform such a verification.

A.2

If the CONCRETE CASK average surface dose rates are not within limits and it is determined that the CONCRETE CASK was loaded with the correct fuel assemblies, an analysis may be performed. This analysis will determine if the CONCRETE CASK would result in the ISFSI offsite or occupational calculated doses exceeding regulatory limits in 10 CFR Part 72 or 10 CFR Part 20, respectively. If it is determined that the measured average surface dose rates do not result in the regulatory limits being exceeded, STORAGE OPERATIONS may continue.

B.1

If it is verified that the fuel was misloaded, or that the ISFSI offsite radiation protection requirements of 10 CFR Part 20 or 10 CFR Part 72 will not be met with the CONCRETE CASK average surface dose rates above the LCO limit, the fuel assemblies must be placed in a safe condition in the spent fuel pool. The Completion Time is reasonable, based on the time required to transport the CONCRETE CASK, transfer the CANISTER to the TRANSFER CASK, remove the structural lid and vent and drain port cover welds, perform fuel cooldown operations, cut the shield lid weld, move the TRANSFER CASK and CANISTER into the spent fuel pool, remove the shield lid, and remove the spent fuel assemblies in an orderly manner and without challenging personnel.

(continued)

SURVEILLANCE REQUIREMENTS (NAC-UMS SYSTEM, including the UNITAD STORAGE SYSTEM)	SR 3.2.2.1 This SR ensures that the CONCRETE CASK average surface dose rates are within the LCO limits after transfer of the CANISTER into the CONCRETE CASK and prior to the beginning of STORAGE OPERATIONS. This Frequency is acceptable as corrective actions can be taken before off-site dose limits are compromised. The surface dose rates are measured approximately at the locations indicated on Figure A3-1 of Appendix A of the CoC Number 1015 Technical Specifications, following standard industry practices for determining average surface dose rates for large containers.

REFERENCES	1. 10 CFR Parts 20 and 72. 2. FSAR Sections 5.1 and 8.2.

C 3.3 NAC-UMS® SYSTEM Criticality Control

C 3.3.1 Dissolved Boron Concentration

BASES

BACKGROUND	A TRANSFER CASK with an empty CANISTER is placed into a PWR spent fuel pool and loaded with fuel assemblies meeting the requirements of the Approved Contents Limits shown in Table B2-2. A shield lid (closure lid for the UNITAD STORAGE SYSTEM) is then placed on the CANISTER. The TRANSFER CASK and CANISTER are raised out of the spent fuel pool. The TRANSFER CASK and CANISTER are then moved into the cask decontamination area, where dose rates are measured and the CANISTER shield lid (closure lid for the UNITAD STORAGE SYSTEM) is welded to the CANISTER shell and the lid weld is examined, pressure tested, and leak tested. The water is drained from the CANISTER, and CANISTER cavity vacuum drying is performed. The CANISTER cavity is then backfilled with helium. Additional dose rates are measured, and the CANISTER vent port and drain port covers and structural lid are installed and welded. Non-destructive examinations are performed on the welds. Contamination measurements are completed prior to moving the TRANSFER CASK and CANISTER in position to transfer the CANISTER to the CONCRETE CASK. After the CANISTER is transferred, the CONCRETE CASK is then moved to the ISFSI. Average CONCRETE CASK dose rates are measured at the ISFSI pad.
APPLICABLE SAFETY ANALYSIS	During loading into, or unloading from, the NAC-UMS SYSTEM CANISTER, criticality control of certain PWR fuel requires that the water in the CANISTER contains dissolved boron in a concentration of 1,000 parts per million, or greater. As shown in Table B2-2, spent fuel with the enrichments shown in the "without (w/o) boron" column may be loaded with no assured level of boron in the water in the CANISTER. However, spent fuel with the enrichments shown in the "with boron" column must be loaded or unloaded from the CANISTER when the water in the CANISTER has a boron concentration of 1,000 parts per million or greater. Since boron concentration varies with water temperature, water temperature must be considered in measuring the boron concentration.

(continued)

LCO	The criticality analysis shows that PWR fuel with certain combinations of initial enrichment and fuel content requires credit for the presence of at least 1,000 parts per million of boron in solution in the water in the CANISTER (see Section B3.2.1 for the requirements for assuring soluble boron concentration during loading or unloading). This water must be used to flood the canister cavity during underwater PWR fuel loading or unloading. The boron in the pool water ensures sufficient thermal neutron absorption to preserve criticality control during fuel loading in the basket. Consequently, if boron credit is required for the fuel being loaded or unloaded, the canister must be flooded with water that contains boron in the proper concentration in accordance with the requirements of LCO 3.3.1. Concentration of boron must also be measured and maintained in accordance with LCO 3.3.1. The dissolved boron concentration requirement, and measurement requirement, applies to both the spent fuel pool water and to water in the CANISTER, when pool water is used to fill the CANISTER. For all fuel loading and unloading operations in water of a UNITAD STORAGE SYSTEM CANISTER, the minimum boron concentration is required to be established as greater than, or equal to, 700 ppm boron.
APPLICABILITY (NAC-UMS SYSTEM, including the UNITAD STORAGE SYSTEM)	Control of Boron concentration is required during LOADING or UNLOADING OPERATIONS when the CANISTER holds at least one spent fuel assembly that requires dissolved boron for criticality control as described in Table B2-2 for the NAC-UMS System and for all UNITAD STORAGE SYSTEM LOADING or UNLOADING OPERATIONS. This LCO does is not applicable to spent fuel having an enrichment within the limits specified in the table in the "without (w/o) boron" column for the NAC-UMS SYSTEM.
ACTIONS	A note has been added to the ACTIONS, which states that, for this LCO, separate Condition entry is allowed for each CANISTER. This is acceptable, since the Required Actions for each Condition provide appropriate compensatory measures for each CANISTER not meeting the LCO. Subsequent CANISTERs that do not meet the LCO are governed by subsequent Condition entry and application of associated Required Actions. <u>A.1</u> If the required dissolved Boron concentration of the water in the CANISTER is not met, immediate actions must be taken to restore the required dissolved boron concentration. No actions, including continued loading, may be taken that increases system reactivity. <u>AND</u>

(continued)

A.2

The required concentration of dissolved Boron must be restored.

AND

A.3

If the required boron concentration in the water in the CANISTER cannot be established within 24 hours, remove all fuel assemblies that exceed the enrichment limits of Table B2-2 for fuel assemblies taking no boron credit from the CANISTER for the NAC-UMS SYSTEM and all fuel assemblies in the UNITAD STORAGE SYSTEM to bring the system to a safe configuration. The 24 hour period provides adequate time to restore the required boron concentration.

SURVEILLANCE REQUIREMENTS (NAC-UMS SYSTEM, including the UNITAD STORAGE SYSTEM)	SR 3.3.1.1 The assurance of an adequate concentration of dissolved boron in the water in the CANISTER must be established once within 4 hours of beginning any LOADING or UNLOADING OPERATION, using two independent measurements of determining boron concentration. During LOADING or UNLOADING OPERATIONS, verification of continued adequate dissolved boron concentration must be performed every 48 hours after the beginning of operations. The 48-hour boron concentration verification is not required when no water is being introduced into the CANISTER cavity. In this situation, no potential exists for the boron in the CANISTER to be diluted, so verification of the boron concentration is not necessary.
REFERENCES	Section B3.2.1 and Table B2-2.

Table of Contents

13.0 QUALITY ASSURANCE 13.1-1

13.1 Introduction 13.1-1

13.2 NAC Quality Assurance Program Synopsis 13.2-1
- 13.2.1 Organization 13.2-1
- 13.2.2 Quality Assurance Program 13.2-1
- 13.2.3 Design Control 13.2-2
- 13.2.4 Procurement Document Control 13.2-3
- 13.2.5 Procedures, Instructions, and Drawings 13.2-3
- 13.2.6 Document Control 13.2-3
- 13.2.7 Control of Purchased Items and Services 13.2-4
- 13.2.8 Identification and Control of Material, Parts, and Components 13.2-4
- 13.2.9 Control of Special Processes 13.2-4
- 13.2.10 Inspection 13.2-5
- 13.2.11 Test Control 13.2-5
- 13.2.12 Control of Measuring and Testing Equipment 13.2-5
- 13.2.13 Handling, Storage and Shipping 13.2-6
- 13.2.14 Inspection, Test and Operating Status 13.2-6
- 13.2.15 Control of Nonconforming Items 13.2-6
- 13.2.16 Corrective Action 13.2-7
- 13.2.17 Records 13.2-7
- 13.2.18 Audits 13.2-7

13.3 References 13.3-1

Appendix 13.A QUALITY ASSURANCE
UNITAD Storage System 13.A-i

List of Figures

Figure 13.2-1 NAC Organization Chart 13.2-8

List of Tables

Table 13.1-1 Correlation of Regulatory Quality Assurance Criteria to NAC Quality Assurance Program 13.1-2

Appendix 13.A QUALITY ASSURANCE
UNITAD Storage System

Table of Contents 13.A-i
List of Figures 13.A-ii

Table of Contents

13.A QUALITY ASSURANCE 13.A-1

List of Figures

Figure 13.A.2-1 NAC Functional Organization Chart 13.A-2

13.A QUALITY ASSURANCE

The NAC International Quality Assurance Program for the UNITAD Storage System is exactly the same as described in the NAC-UMS® FSAR Chapter 13, except that Figure 13.A.2-1, NAC Organization Chart, is updated as shown on the following page.
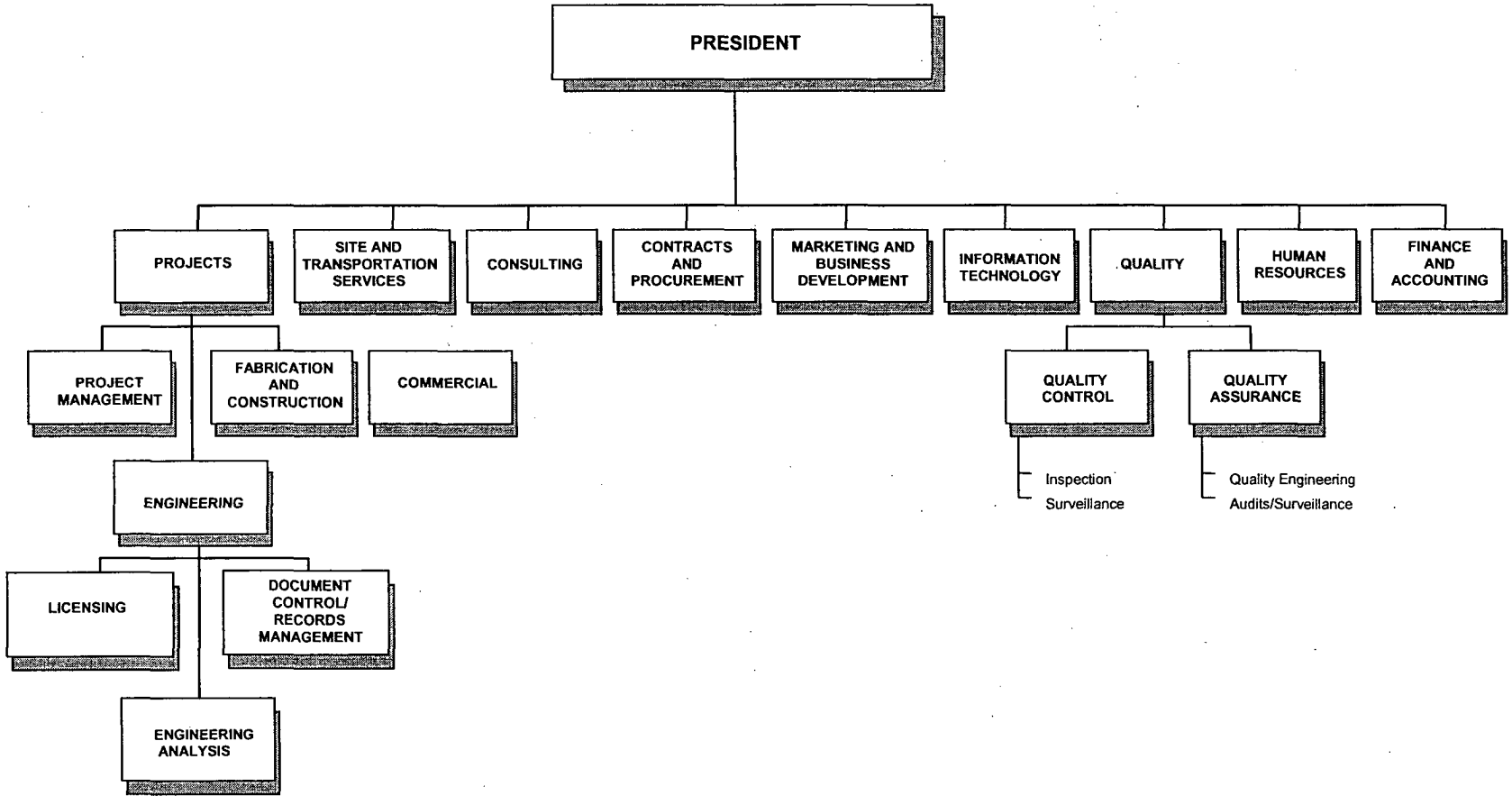
Figure 13.A.2-1 NAC Functional Organization Chart