Eagle Rock Enrichment Facility

Safety Analysis Report

TABLE OF CONTENTS

Page

1.0 GENERAL INFORMATION 1.0-1

1.1 FACILITY AND PROCESS DESCRIPTION 1.1-1

1.1.1 Facility Location, Site Layout, and Surrounding Characteristics 1.1-3

1.1.2 Facilities Description 1.1-3

1.1.3 Process Descriptions 1.1-7

1.2 INSTITUTIONAL INFORMATION 1.2-1

1.2.1 Corporate Identity 1.2-1

1.2.2 Financial Information 1.2-3

1.2.3 Type, Quantity and Form of Licensed Material 1.2-4

1.2.4 Requested Licenses and Authorized Uses 1.2-4

1.2.5 Special Exemptions of Special Authorizations 1.2-4

1.2.6 Security of Classified Information 1.2-6

1.3 SITE DESCRIPTION 1.3-1

1.3.1 Site Geography 1.3-1

1.3.2 Demographics 1.3-2

1.3.3 Meteorology 1.3-5

1.3.4 Hydrology 1.3-8

1.3.5 Geology 1.3-10

1.4 REFERENCES 1.4-1

LIST OF TABLES

Table 1.1-1 Estimated Annual Gaseous Effluent
Table 1.1-2 Estimated Annual Radiological and Mixed Wastes
Table 1.1-3 Estimated Annual Liquid Effluent
Table 1.1-4 Estimated Annual Non-Radiological Wastes
Table 1.1-5 Annual Hazardous Construction Wastes
Table 1.2-1 Type, Quantity and Form of Licensed Material

LIST OF FIGURES

Figure 1.1-1	State Map
Figure 1.1-2	County Map
Figure 1.1-3	Site Plan with Property and Controlled Area Boundary
Figure 1.1-4	Facility Layout
Figure 1.1-5	Separations Building Module/UF_6 Handling Area Basement
Figure 1.1-6	Separations Building Module/UF_6 Handling Area First Floor
Figure 1.1-7	Separations Building Module/UF_6 Handling Area Second Floor
Figure 1.1-7A	Separations Building Module/UF_6 Handing Area Roof
Figure 1.1-8	Technical Support/Operation Support Building First Floor
Figure 1.1-9	Technical Support/Operation Support Building Second Floor
Figure 1.1-10	Technical Support/Operation Support Building Third Floor
Figure 1.1-11	Centrifuge Assembly Building First Floor
Figure 1.1-12	Centrifuge Assembly Building Second Floor
Figure 1.1-13	Cylinder Receipt and Shipping Building Floor Plan
Figure 1.1-14	Blending, Sampling & Preparation Building Floor Plan
Figure 1.1-15	Mechanical Services Building Floor Plan
Figure 1.1-16	Electrical Services Building Floor Plan
Figure 1.1-17	Electrical Services Building for Centrifuge Assembly Building Floor Plan
Figure 1.3-1	Radial Sectors 5 mi (8 km) Radius

1.0 GENERAL INFORMATION

This section contains a general description and purpose of the AREVA Enrichment Services (AES) Eagle Rock Enrichment Facility (EREF). The facility enriches uranium for producing nuclear fuel for use in commercial power plants. This Safety Analysis Report (SAR) follows the format recommended by NUREG-1520, Standard Review Plan for the Review of a License Application for a Fuel Cycle Facility (NRC, 2002). The level of detail provided in this chapter is appropriate for general familiarization and understanding of the facility and processes. The information is to be used as background for the more detailed descriptions provided in other chapters of the license application or the Integrated Safety Analysis (ISA) Summary. This chapter also provides information on the corporate structure and economic qualifications of AES.

Although the EREF will have two times the nominal capacity as that described in the National Enrichment Facility SAR (LES, 2005), the EREF's core processes; type, and form of licensed material; and requested licenses and authorized uses are the same. The primary differences in the material presented in this chapter for the EREF and the material presented in Chapter 1 of the NEF SAR relate to the Facilities Description (Section 1.1.2), Institutional Information (Section 1.2), and the Site Description (Section 1.4).

With respect to facilities, the EREF has four Separations Building Modules each containing two cascade halls. Each cascade hall contains 12 cascades. The NEF has three Separations Building Modules each containing two cascade halls. Each cascade hall contains eight cascades. In addition, the EREF does not intend to install a Fomblin Oil Recovery System. The PFPE oil will, instead, be disposed of as low-level radioactive waste.

1.1 FACILITY AND PROCESS DESCRIPTION

The EREF is located in Bonneville County, Idaho approximately 113 km (70 mi) west of the Idaho/Wyoming state line. This location is approximately 32 km (20 mi) west northwest of the city of Idaho Falls.

The geographic location of the facility is shown on Figures 1.1-1, State Map, and 1.1-2, County Map.

This uranium enrichment plant is based on a highly reliable gas centrifuge process. The plant is designed to separate a feed stream containing the naturally occurring proportions of uranium isotopes into a product stream - enriched in the uranium-235 (^{235}U) isotope and a tails stream - depleted in the ^{235}U isotope. The process, entirely physical in nature, takes advantage of the tendency of materials of differing density to segregate in the force field produced by a centrifuge. The chemical form of the working material of the plant, uranium hexafluoride (UF_6), does not require chemical transformations at any stage of the process. This process enriches natural UF_6, containing approximately 0.711% ^{235}U to a UF_6 product, containing ^{235}U enriched up to 5 $^{w}/_{o}$.

The nominal capacity of the facility is 6 million separative work units (SWU) per year. The plant design capacity is 6.6 million SWU thus allowing for a production margin for centrifuge failures and occasional production losses during the operational lifetime of the facility.

Feed is received at the plant in specially designed cylinders containing up to 12.5 MT (13.8 tons) of UF_6. The cylinders are inspected and weighed in the Cylinder Receipt and Shipping Building (CRSB) and transferred to the main process facility, the Separations Building. Separation operations are divided among four Separations Building Modules, each capable of handling approximately one-quarter of plant capacity. Each Separations Building Module is divided into two Cascade Halls, and each Cascade Hall is comprised of twelve cascades. Therefore, the total plant is comprised of 96 cascades. Each Cascade Hall produces enriched UF_6 at a specified assay ($^{w}/_{o}$ ^{235}U), so up to eight different assays can be produced at one time.

The enrichment process, housed in the Separations Building, is comprised of four major elements: a UF_6 Feed System, a Cascade System, a Product Take-off System, and a Tails Take-off System. Other product related functions include the Product Liquid Sampling and Product Blending Systems. Supporting functions include sample analysis, equipment decontamination and rebuild, liquid effluent treatment, and solid waste management.

The major equipment used in the UF_6 feed process are Solid Feed Stations. Feed cylinders are loaded into Solid Feed Stations; vented for removal of light gases, primarily air and hydrogen fluoride (HF), and heated to sublime the UF_6. The light gases and UF_6 gas generated during feed purification are routed to the Feed Purification Subsystem where the UF_6 is desublimed.

The major pieces of equipment in the Feed Purification Subsystem are UF_6 Cold Traps, a Vacuum Pump/Chemical Trap Set, and a Low Temperature Take-off Station (LTTS). The Feed Purification Subsystem removes any light gases such as air and HF from the UF_6 prior to introduction into the cascades. The UF_6 is captured in UF_6 Cold Traps and ultimately recycled as feed, while HF is captured on chemical traps.

After purification, UF_6 from the Solid Feed Stations is routed to the Cascade System. Pressure in all process lines is subatmospheric.

Gaseous UF_6 from the Solid Feed Stations is routed to the centrifuge cascades. Each centrifuge has a thin-walled, vertical, cylindrically shaped rotor that spins around a central post within an outer casing. Feed, product, and tails streams enter and leave the centrifuge through

the central post. Control valves, restrictor orifices, and controllers provide uniform flow of product and tails.

Depleted UF_6 exiting the cascades is transported from the high vacuum of the centrifuge for desublimation into cylinders at subatmospheric pressure. The primary equipment of the Tails Take-off System is the vacuum pumps and the Tails Low Temperature Take-off Stations (LTTS). Chilled air flows over cylinders in the Tails LTTS to effect the desublimation. Filling of the cylinders is monitored with a load cell system, and filled cylinders are transferred outdoors to the Full Tails Cylinder Storage Pad.

Enriched UF_6 from the cascades is desublimed in a Product Take-off System comprised of vacuum pumps, Product Low Temperature Take-off Stations (LTTS), UF_6 Cold Traps, and Vacuum Pump/Chemical Trap Sets. The pumps transport the UF_6 from the cascades to the Product LTTS at subatmospheric pressure. The heat of desublimation of the UF_6 is removed by cooling air routed through the LTTS. The product stream normally contains small amounts of light gases that may have passed through the centrifuges. Therefore, a UF_6 Cold Trap and Vacuum Pump/Trap Set are provided to vent these gases from the product cylinder. Any UF_6 captured in the cold trap is periodically transferred to another product cylinder for use as product or blending stock. Filling of the product cylinders is monitored with a load cell system, and filled cylinders are transferred to the Product Liquid Sampling System for sampling.

The Cylinder Preparation process includes the performance of certain tests and inspections on full or partially full cylinders and cylinders containing heels; evacuation of light gas in full, partially full, and empty cylinders; and reducing the heel quantities in cylinders using the Cylinder Evacuation System. The Cylinder Evacuation System provides conditioning through evacuation of 30B or 48Y cylinders that are new or cleaned empties, that contain a heel of UF_6, and less frequently, that are full or partially full of UF_6. A detailed description of these processes is provided in ISA Summary 3.5.18, Cylinder Preparation Processes.

Sampling is performed to verify product assay level ($^{w}/_{o}$ ^{235}U). The Product Liquid Sampling Autoclave is an electrically heated, closed pressure vessel used to liquefy the UF_6 and allow collection of a sample. The autoclave is fitted with a hydraulic tilting mechanism that elevates one end of the autoclave so that liquid UF_6 pours into a sampling manifold connected to the cylinder valve. After sampling, the autoclave is brought back to the horizontal position and the autoclave and cylinder are cooled down by a chiller unit mounted on the interior of the pressure vessel with the refrigerant compression and heat rejection components on the exterior.

AES customers may require product at enrichment levels other than that produced by a single Cascade Hall. Therefore, the plant has the capability to blend enriched UF_6 from donor cylinders of different assays into a product receiver cylinder. The Product Blending System is comprised of Blending Donor Stations for two donor cylinders and Blending Receiver Stations for the receiver cylinders. The Donor Stations are similar to the Solid Feed Stations described earlier. The Receiver Station is similar to the Low-Temperature Take-off Stations described earlier.

Support functions, including sample analysis, equipment decontamination and rebuild, liquid effluent treatment, and solid waste management are conducted in the Technical Support Building (TSB). Decontamination, primarily of pumps and valves, uses solutions of citric acid. Sampling includes a Mass Spectrometry Laboratory for verifying product UF_6 assay, and an Environmental Sampling, Storage, Preparation and Analysis Room. Liquid effluent is collected and treated using the Liquid Effluent Collection and Treatment System. There are no liquid discharges to the environment from this system.

1.1.1 Facility Location, Site Layout, and Surrounding Characteristics

Site features are well suited for the location of a uranium enrichment facility as evidenced by its favorable conditions of hydrology, geology, seismology, and meteorology as well as good transportation routes for transporting feed and product by truck.

The facility is located on approximately 1,700 ha (4,200 ac) in Bonneville County, Idaho. The Separations Building Modules, Administration Building, Security and Secure Administration Building, Cylinder Receipt and Shipping Building, Centrifuge Assembly Building, Electrical Services Building, Mechanical Services Buildings, Technical Support Building, Operation Support Building, and Cylinder Storage Pads are located approximately in the north central portion of the plot on about 172 ha (426 acres) of developed area. A plot plan of the facility depicting the property and controlled area boundary is shown in Figure 1.1-3, Site Plan with Property and Controlled Area Boundary. The facility layout is shown in Figure 1.1-4, Facility Layout.

The site partly lies along the north side of U.S. Highway 20. A dirt road provides site access from U.S. Highway 20, while other dirt roads provide access throughout the proposed site. The proposed site is comprised mostly of relatively flat and gently sloping surfaces with small ridges and areas of rock outcrop. Elevations at the site range from 1,556 m (5,106 ft) to 1,600 m (5,250 ft). The overall slope direction is to the southwest.

The nearest community is the city of Idaho Falls, approximately 32 km (20 mi) from the site. There are no residences, schools, stores or other population centers within a 1.6 km (1 mi) radius of the site.

Additional details of proximity to nearby populations are provided in the Environmental Report (ER).

1.1.2 Facilities Description

The major structures and areas of the facility are outlined below.

Separations Building Modules

The overall layout of a Separations Building Module with the UF_6 Handling Area is presented in Figures 1.1-5 through 1.1-7A. The facility includes four identical Separations Building Modules. Each module consists of two Cascade Halls, each having twelve cascades with each cascade having hundreds of centrifuges. Each Cascade Hall is capable of producing approximately 825,000 SWU per year. The major functional areas of the Separations Building Modules are:

- Cascade Halls (2)
- Process Service Corridor
- UF_6 Handling Area

Source material and special nuclear material (SNM) are used or produced in this area.

Technical Support Building (TSB)

The overall layout of the Technical Support Building (TSB) is presented in Figures 1.1-8, Technical Support/Operation Support Building First Floor, 1.1-9, Technical Support/Operation Support Building Second Floor, and 1.1-10, Technical Support/Operation Support Building Third Floor. The TSB contains radiological support areas for the facility. It also acts as a secure point of entry to the SBMs and the BSPB. The major functional areas of the TSB are:

- Solid Waste Collection Room

- Valve and Pump Dismantling Workshop
- Decontamination Workshop
- Liquid Effluent Collection and Treatment Room
- Laundry Sorting Room
- TSB Gaseous Effluent Ventilation System (GEVS)
- Laboratory Areas - Mass Spectrometry Laboratory, Analytical Laboratory, Preparation Room, Sample Bottle Storage Room, Uranium Analysis, Physical Analysis, Alpha/Beta/Gamma Counting, IR/CPG (Infrared/Counter Propagation) Room, ICPAES/ICPMS (Inductively Coupled Plasma Atomic Emission Spectroscopy/Inductively Coupled Plasma Mass Spectrometry) Room.
- Radiation Monitoring Room
- Truck Bay/Shipping and Receiving Area – for shipping packaged low-level radioactive wastes and hazardous wastes for transportation offsite and for miscellaneous shipping and receiving.
- Ancillary Areas - The following ancillary areas are located in the TSB: electrical room, HVAC rooms, archive room, offices, stairs, corridors, and elevators.
- Chemical Trap Workshop
- Mobile Unit Disassembly and Reassembly Workshop
- Maintenance Facility for contaminated facility equipment

Source material and SNM are found in this area.

Operation Support Building (OSB)

The OSB is adjacent to the Technical Support Building (TSB) and the Blending, Sampling and Preparation Building (BSPB). The OSB is shown on Figures 1.1-8 through 1.1-10 along with the TSB. The OSB contains non-radiological support areas for the facility. The OSB contains the following functional areas:

- Vacuum Pump Rebuild Workshop
- Mechanical, Electrical and Instrumentation (ME&I) Workshop
- Medical Room
- Locker Rooms
- Cafeteria
- Lobby
- Ancillary Areas - storage areas, heating, ventilation, and air conditioning (HVAC) and electrical rooms, archive areas, conference rooms, offices, stairs, and corridors.
- Control Room
- Training Room and Operation Support
- Security Alarm System Room

- Environmental Laboratory Area - provides rooms and space for various laboratory areas that receive, prepare, and store various samples

Centrifuge Assembly Building (CAB)

This building is used to assemble centrifuges before they are moved into the Separations Building and installed in the cascades. The overall layout of the Centrifuge Assembly Building (CAB) is presented in Figures 1.1-11 and 1.1-12. The major functional areas of the CAB are:

- Centrifuge Component Storage Areas
- Centrifuge Assembly Areas
- Assembled Centrifuge Storage Areas
- Building Office Area
- Centrifuge Test and Post Mortem Facilities.

Source material and SNM are used and produced in this area.

Administration Building

The Administration Building is on the south end of the site near the Security and Secure Administration Building and is shown in Figure 1.1-4. It contains general office areas. Vehicular traffic passes through a security checkpoint before being allowed to park. Parking is located outside of the Controlled Access Area (CAA) security fence. Personnel enter the Administration Building and general office areas via the main lobby.

Security and Secure Administration Building

The Security and Secure Administration Building is on the south end of the site near the Administration Building. It contains secure office areas and the Entry Exit Control Point (EECP) for the facility. All personnel access to inside areas of the plant occurs at this location.

Personnel requiring access to facility areas or the CAA must pass through the EECP. The EECP is designed to facilitate and control the passage of authorized facility personnel and visitors.

Guard House

The main Guard House is located at the entrance to the plant. It functions as a security checkpoint for all incoming and outgoing traffic. Employees, visitors and trucks that have access approval will be screened at the main Guard House.

Cylinder Receipt and Shipping Building

The overall layout of the Cylinder Receipt and Shipping Building (CRSB) is presented in Figure 1.1-13. The CRSB is located near the Cylinder Storage Pads. This building contains equipment to receive, inspect, weigh and temporarily store cylinders of feed UF_6 sent to the plant; temporarily store, inspect, weigh, and ship cylinders of enriched UF_6 to facility customers; receive, inspect, weigh, and temporarily store empty product and depleted uranium tails cylinders prior to being filled in the Separations Building; and inspect, weigh, and transfer filled depleted uranium tails cylinders to the Full Tails Cylinder Storage Pad. The functions of the Cylinder Receipt and Shipping Building are:

- Loading and unloading of cylinders
- Preparation of cylinder overpack protective packaging, as required

Source material and SNM are used in this area.

Blending, Sampling and Preparation Building (BSPB)

The Blending, Sampling, and Preparation Building is adjacent to the UF_6 Handling Areas, Technical Support Building, and the Operation Support Building. The BSPB is shown in Figure 1.1-14.

The primary function of the BSPB is to provide means to fill ANSI N14.1 (ANSI, applicable version) 30B cylinders with UF_6 at a required ^{235}U enrichment level and to liquefy, homogenize and sample 30B cylinders prior to shipment to the customer. Sampling of 48Y cylinders for internal use are also sampled in the BSPB. The area contains the major components associated with the Product Liquid Sampling System and the Product Blending System. Cylinder activities including testing, weighing, conditioning, defrosting and inspection are performed in the BSPB. In addition, Cylinder Preparation and Cylinder Evacuation System processes are performed in the BSPB.

The Ventilated Room is also located within the BSPB. This room provides space for the maintenance of cylinders. The activities carried out within the Ventilated Room include contaminated cylinder pressure testing, cylinder pump out and valve maintenance. The Ventilated Room is under negative pressure. Therefore, any equipment or personnel entering this room must go through an air-lock.

Source material and SNM are used in this area.

Cylinder Storage Pads

The EREF uses several outside areas for storage of full cylinders containing UF_6 and for storage of empty cylinders. Cylinders containing UF_6 that is depleted in ^{235}U are temporarily stored on the Full Tails Cylinder Storage Pads which have the capacity to hold the 25,718 full tail cylinders that are estimated to be generated during the facility's operating life. Full feed cylinders containing natural UF_6 will be temporarily stored on the Full Feed Cylinder Storage Pads prior to use in the facility. The pads are sized to store approximately 712 full feed cylinders. Full feed cylinders will not be stacked. Empty cylinders (feed, product, and tails) will be temporarily stored on the Empty Cylinder Storage Pads. The pads are sized to store approximately 1,840 empty cylinders. Empty cylinders can be stacked two high. The Full Tails, Full Feed, and Empty Cylinder Pads are at the north end of the facility and are adjacent pads. Full product cylinders containing enriched UF_6 will be temporarily stored on the Full Product Cylinder Storage Pad prior to shipment offsite to a fuel fabrication facility. The pad is sized to store approximately 1,032 full product cylinders. Full product cylinders will not be stacked. The Full Product Cylinder Storage Pad is located near the Blending, Sampling, and Preparation Building adjacent to the Cylinder Receipt and Shipping Building.

Source material and SNM are used in this area.

Electrical Services Building (ESB)

The ESB is located immediately north of the SBMs. It houses four standby diesel generators (DGs), which provide the site with standby power. The ESB is shown on Figure 1.1-16.

The building also contains day tanks, switchgear, control panels, and building heating, ventilation, and air conditioning (HVAC) equipment. The rooms housing the standby DGs are constructed independent of each other with adequate provisions made for maintenance, as well as equipment removal and equipment replacement via roll-up and access doors.

Gasoline and Diesel Fueling Station (GDFS)

A Gasoline and Diesel Fueling Station is located to the northeast of the CAB. The GDFS supports vehicle fueling from an adjacent fuel pump island and on-site vehicle repair and maintenance conducted inside the building.

Mechanical Services Buildings (MSBs)

The two MSBs are located south of the SBMs. They house air compressors, the demineralized water system, the centrifuge cooling water system pumps, heat exchangers, and expansion tanks. The MSB is presented in Figure 1.1-15.

Electrical Services Building for the CAB

An Electrical Services Building that supports the CAB (ESB-CAB) is located to the east of the CAB. The ESB-CAB houses four transformers and switchgear, which provide the CAB and the adjacent long term warehouse with power. The ESB-CAB also contains control and lighting panels. The ESB-CAB is presented in Figure 1.1-17.

Visitor Center

A Visitor Center is located outside the security fence area near Highway 20.

1.1.3 Process Descriptions

This section provides a description of the various processes analyzed as part of the Integrated Safety Analysis. A brief overview of the entire enrichment process is provided followed by an overview of each major process system.

1.1.3.1 Process Overview

The enrichment process at the EREF is basically the same process described in the SAR for the National Enrichment Facility (LES, 2005). The Nuclear Regulatory Commission (NRC) staff documented its review of the National Enrichment Center license application and concluded that LES's application provided an adequate basis for safety and safeguards of facility operations and that operation of the National Enrichment Facility would not pose an undue risk to worker and public health and safety (NRC, 2005). The design of the EREF incorporates the latest safety improvements and design enhancements from the enrichment facilities currently operating and under construction in Europe.

The primary function of the facility is to enrich natural uranium hexafluoride (UF_6) by separating a feed stream containing the naturally occurring proportions of uranium isotopes into a product stream enriched in ^{235}U and a tails stream depleted in the ^{235}U isotope. The feed material for the enrichment process is uranium hexafluoride (UF_6) with a natural composition of isotopes ^{234}U, ^{235}U, and ^{238}U. The enrichment process is a mechanical separation of isotopes using a fast rotating cylinder (centrifuge) based on a difference in centrifugal forces due to differences in molecular weight of the uranic isotopes. No chemical changes or nuclear reactions take place. The feed, product, and tails streams are all in the form of UF_6.

1.1.3.2 Process System Descriptions

An overview of the enrichment process systems and the enrichment support systems is discussed below.

Numerous substances associated with the enrichment process could pose hazards if they were released into the environment. Chapter 6, Chemical Process Safety, contains a discussion of the criteria and identification of the chemicals of concern at the EREF and concludes that uranium hexafluoride (UF_6) is the only chemical of concern that will be used at the facility. Chapter 6, Chemical Process Safety, also identifies the locations where UF_6 is stored or used in the facility and includes a detailed discussion and description of the hazardous characteristics of UF_6 as well as a detailed listing of other chemicals that are in use at the facility.

The enrichment process is comprised of the following major systems:

<u>UF_6 Feed System</u>

The first step in the process is the receipt of the feed cylinders and preparation to feed the UF_6 through the enrichment process.

Natural UF_6 feed is received at the EREF in 48Y cylinders from a conversion plant. 48X cylinders are not used at EREF. Pressure in the feed cylinders is below atmospheric (vacuum) and the UF_6 is in solid form.

The function of the UF_6 Feed System is to provide a continuous supply of gaseous UF_6 from the feed cylinders to the cascades. There are six Solid Feed Stations per Cascade Hall; three stations in operation and three on standby.

<u>Cascade System</u>

The function of the Cascade System is to receive gaseous UF_6 from the UF_6 Feed System and enrich the ^{235}U isotope in the UF_6 to a maximum of 5 $^{w}/_{o}$.

Multiple gas centrifuges make up arrays called cascades. The cascades separate gaseous UF_6 feed with a natural uranium isotopic concentration into two process flow streams - product and tails. The product stream is ^{235}U enriched up to 5 $^{w}/_{o}$. The tails stream is UF_6 that has been depleted of ^{235}U isotope to 0.15 - 0.30 $^{w}/_{o}$ ^{235}U.

<u>Product Take-off System</u>

The function of the Product Take-off System is to provide continuous withdrawal of the enriched gaseous UF_6 product from the cascades and to purge and dispose of light gas impurities from the enrichment process.

The product streams leaving the twelve cascades are brought together into one common manifold from the Cascade Hall. The product stream is transported via a train of vacuum pumps to Product LTTS in the UF_6 Handling Area. There are six Product LTTS per Cascade Hall; normally three stations in operation and three stations on standby.

The Product Take-off System also contains a system to purge light gases (typically air and hydrogen fluoride) from the enrichment process. This system consists of UF_6 Cold Traps which capture UF_6 while leaving the light gas in a gaseous state. The cold trap is followed by product vent Vacuum Pump/Trap Sets, each consisting of a carbon trap, an alumina trap, and a vacuum pump. The carbon trap removes small traces of UF_6 and the alumina trap removes any hydrogen fluoride (HF) from the product gas„

<u>Tails Take-off System</u>

The primary function of the Tails Take-off System is to provide continuous withdrawal of the gaseous UF_6 tails from the cascades. A secondary function of this system is to provide a means for removal of UF_6 from the centrifuge cascades under abnormal conditions.

The tails stream exits each Cascade Hall via a primary header, goes through a pumping train, and then to Tails LTTS in the UF_6 Handling Area. There are 11 Tails LTTS per Cascade Hall. Under normal operation, nine of the stations are in operation receiving tails and two are on standby.

In addition to the four primary systems listed above, there are two major support systems:

Product Blending System

The primary function of the Product Blending System is to provide a means to fill 30B cylinders with UF_6 at a specific enrichment of ^{235}U to meet customer requirements. This is accomplished by blending (mixing) UF_6 at two different enrichment levels to one specific enrichment level. The system can also be used to transfer product from a 30B or 48Y cylinder to another 30B cylinder without blending.

This system consists of Blending Donor Stations (which are similar to the Solid Feed Stations) and Blending Receiver Stations (which are similar to the Product LTTS) described under the primary systems.

Product Liquid Sampling System

The function of the Product Liquid Sampling System is to obtain an assay sample from filled product 30B cylinders. The sample is used to validate the exact enrichment level of UF_6 in the filled product cylinders before the cylinders are sent to the fuel processor. Sampling of 48Y cylinders filled for internal use are also conducted through this system.

Cylinder Preparation and Cylinder Evacuation System

The Cylinder Preparation process includes the performance of certain tests and inspections on full or partially full cylinders and cylinders containing heels; evacuating light gas in full, partially full, and empty cylinders; and reducing the heel quantities in cylinders using the cylinder Evacuation System. The Cylinder Evacuation System provides conditioning through evacuation of 30B or 48Y cylinders that are new or cleaned empties, that contain a heel of UF_6, and less frequently, that are full or partially full of UF_6. A detailed description of these processes is provided in ISA Summary 3.5.1.8, Cylinder Preparation Processes.

1.1.3.3 Materials, By-Products, Wastes, and Finished Products

The facility handles Special Nuclear Material of ^{235}U contained in uranium enriched above natural but less than or equal to 5.0 $^{w}/_{o}$ in the ^{235}U isotope. The ^{235}U is in the form of uranium hexafluoride (UF6). At full capacity, the EREF processes approximately 1,424 feed cylinders (Model 48Y), 1,032 product cylinders (Model 30B), and 1,222 full tails cylinders (Model 48Y) per year.

AES does not propose possession of any reflectors or moderators with special characteristics.

Solid Waste Management

Solid waste generated at the EREF will be grouped into industrial (non-hazardous), radioactive, hazardous, and mixed waste categories. In addition, solid radioactive and mixed waste is further segregated according to the quantity of liquid that is not readily separable from the solid material. The solid waste management systems are comprised of a set of facilities, administrative procedures, and practices that provide for the collection, temporary storage, processing, and transportation for disposal of categorized solid waste in accordance with regulatory requirements. All solid radioactive wastes generated are Class A low-level wastes (LLW) as defined in 10 CFR 61 (CFR, 2008a).

Radioactive waste will be collected in labeled containers in each Restricted Area and transferred to the Solid Waste Collection Room for inspection. As appropriate, waste will be volume-reduced and all radioactive waste disposed of at a licensed low-level waste (LLW) disposal facility.

Hazardous wastes and some mixed wastes will be generated at the facility. These wastes will be collected at the point of generation, transferred to the Solid Waste Collection Room, inspected, and classified. Any mixed waste that may be processed to meet land disposal requirements may be treated in its original collection container and shipped as LLW for disposal.

Industrial waste, including miscellaneous trash, filters, resins, and paper will be shipped offsite for compaction and then sent to a licensed waste landfill.

Effluent Systems

The following EREF systems are used to handle gaseous and liquid wastes and effluent.

- Gaseous Effluent Ventilation System (GEVS)
    - SBM GEVS with Passive IROFS that Contain Safe-by-Design Component Attributes
    - SBM Local Extraction GEVS
    - TSB GEVS
- Ventilated Room HVAC
- TSB HVAC for potentially contaminated areas (Decontamination Workshop, Chemical Trap Workshop, Mobile Unit Disassembly and Reassembly Workshop, Valve and Pump Dismantling Workshop, and Maintenance Facility)
- Liquid Effluent Collection and Treatment System
- Centrifuge Test and Post Mortem Facilities Exhaust Filtration System
- Sanitary Sewage Treatment System
- Solid Waste Collection System
- Decontamination System

Effluent Quantities

Quantities of radioactive and non-radioactive wastes and effluent are estimated and shown in the tables referenced in this section. The tables include quantities and average uranium concentrations. Portions of the waste considered hazardous or mixed are identified.

The following tables address plant effluents:

Table 1.1-1, Estimated Annual Gaseous Effluent

Table 1.1-2, Estimated Annual Radiological and Mixed Wastes

Table 1.1-3, Estimated Annual Liquid Effluent

Table 1.1-4, Estimated Annual Non-Radiological Wastes

Radioactive concentration limits and handling for liquid wastes and effluents are detailed in the Environmental Report.

The waste and effluent estimates described in the tables listed above were developed specifically for the EREF. Each system was analyzed to determine the wastes and effluents generated during operation. These values were analyzed and a waste disposal path was developed for each. AES considered the facility site, facility operation, applicable European experience, applicable regulations, and the existing U.S. waste processing/disposal infrastructure during the development of the paths. The Liquid Effluent Collection and Treatment System and the Solid Waste Collection System were designed to meet these criteria.

Construction Wastes

During construction, efforts are made to minimize the environmental impact. Erosion, sedimentation, dust, smoke, noise, unsightly landscape, and waste disposal are controlled to practical levels and applicable regulatory limits. Wastes generated during site preparation and construction will be varied, depending on the activities in progress. The bulk of the wastes will consist of non-hazardous materials such as packing materials, paper and scrap lumber. These wastes will be transported off site to an approved landfill. It is estimated that the EREF will generate a non-compacted average waste volume of 3,058 m^3 (4,000 yd^3) annually.

Hazardous type wastes that may be generated during construction have been identified and annual quantities estimated are shown in Table 1.1-5, Annual Hazardous Construction Wastes. Any of these wastes that are generated will be handled by approved methods and shipped off site to approved disposal sites.

Management and disposal of all wastes from the EREF site will be performed by personnel trained to properly identify, store, and ship wastes, audit vendors, direct and conduct spill cleanup, provide interface with state agencies, maintain inventories, and provide annual reports.

A Spill Prevention, Control and Countermeasure Plan (SPCC) will be implemented during construction to minimize the possibility of spills of hazardous substances, minimize environmental impacts of any spills, and ensure prompt and appropriate remediation. The SPCC plan will identify sources, locations, and quantities of potential spills and response measures. The plan will identify individuals and their responsibilities for implementation of the plan and provide for prompt notifications of state and local authorities.

1.2 INSTITUTIONAL INFORMATION

This section provides the applicant's corporate identity and location, applicant's ownership organization and financial information. Also, the type, quantity, and form of licensed material to be used at the facility, and the type(s) of license(s) being applied for are discussed.

1.2.1 Corporate Identity

1.2.1.1 Applicant

The Applicant's name, address, and principal office are as follows:

AREVA Enrichment Services, LLC
4800 Hampden Lane
Bethesda, Maryland 20814

1.2.1.2 Organization and Management of Applicant

AREVA Enrichment Services (AES), LLC is a Delaware limited liability corporation. It has been formed solely to provide uranium enrichment services for commercial nuclear power plants. AES is a wholly owned subsidiary of AREVA NC Inc. AREVA NC Inc. is a wholly owned subsidiary of AREVA NC SA which is part of AREVA SA.

The AREVA SA is a corporation formed under the laws of France ("AREVA"), is governed by the Executive Board, and its principal owners are as follows.

Commissariat à l'Energie Atomique (French Atomic Energy Commission)	78.96%
French State	5.19%
Caisse des dépôts and consignations	4.61%
ERAP	3.21%
Electricité d'France	2.42%
Investment Certificate Holders	4.03%
TOTAL	1.58%

AES is a Delaware corporation and is governed by the AES Management Committee. The names and addresses of the AES Management Committee are as follows.

- Mr. Jacques Besnainou
  President and Chief Executive Officer of AREVA NC Inc
  President of AREVA Inc
  4800 Hampden Lane, Bethesda MD 20814, USA

  Mr. Besnainou is a citizen of France and a citizen of the United States of America.

- Mr. Michael McMurphy
  Senior Executive Vice President
  Mine, Chemistry and Enrichment Sector, AREVA NC SA
  33 rue Lafayette, 75009 Paris, France

  Mr. McMurphy is a citizen of the United States of America

- Mr. Francoix-Xavier Rouxel
  Executive Vice President, Enrichment Business Unit, AREVA NC SA
  33 rue Lafayette, 75009 Paris, France

  Mr. Rouxel is a citizen of France

- Mr. Gary Fox
  Executive Vice President, AREVA NC Inc
  4800 Hampden Lane, Bethesda, MD 20814

  Mr. Fox is a citizen of the United States of America

- Mr. Nicolas De Turckhiem
  Director, Enrichment Business Unit, AREVA NC SA
  33 rue Lafayette, 75009 Paris, France

  Mr. De Turckhiem is a citizen of France

- Mr. Nicolas Fayet
  Chief Financial Officer, Enrichment Business Unit, AREVA NC SA
  33 rue Lafayette, 75009 Paris, France

  Mr. Fayet is a citizen of France

The President and Chief Executive Officer (CEO) of AES is Mr. Sam Shakir, a citizen of Canada and a naturalized citizen of the United States of America. Any safety decision related to the operation of the facility will be made by the President of AES.

AES's principal location for business is Bethesda, MD. The facility will be located in Bonneville County near Idaho Falls, Idaho. No other companies will be present or operating on the EREF site other than services specifically contracted by AES.

AES is responsible for the design, quality assurance, construction, operation, and decommissioning of the enrichment facility. The President and CEO of AES report to the AES Management Committee.

Foreign Ownership, Control, and Influence (FOCI) of AES is addressed in the AES Standard Practice Procedures Plan, Appendix 1 - FOCI Package. The NRC, in its letter to Louisiana Energy Services, dated March 24, 2003, has stated "...that while the mere presence of foreign ownership would not preclude grant of the application, any foreign relationship must be examined to determine whether it is inimical to the common defense and security [of the United States]" (NRC, 2003b). The FOCI Package mentioned above provides sufficient information for this examination to be conducted.

1.2.1.3 Address of the Enrichment Plant and Legal Site Description

The EREF is located in Bonneville County, Idaho along State Highway 20 approximately 32 km (20 mi) east southeast from the city of Idaho Falls. The legal description is as follows:

"All of Sections 13, 14 and 15; the Northeast quarter (NE1/4) of Section 21; the North half (N1/2), and Southeast Quarter of the Southeast Quarter (SE1/4 SE1/4) of Section 22; the North Half (N1/2), the Southeast Quarter (SE1/4), the East Half of the Southwest Quarter (E1/2 SW1/4), and the Southwest Quarter of the Southwest Quarter (SW1/4 SW1/4) of Section 23; the

West Half (W1/2), and the West Half of the Southeast quarter (W1/2 SE1/4), and the Northeast quarter of the Southeast quarter (NE1/4 SE1/4) and the Northwest quarter of the Northeast quarter (NW1/4 NE1/4) of Section 24; the West 1/2 (W1/2) of Section 25, Less the Highway and that portion of the SW1/4 deeded to the State of Idaho in a Warranty Deed recorded July 25, 1950, in Book 72 of Deeds, at page 565 and the Northeast quarter (NE1/4); the East Half of the Northwest Quarter (E1/2 NW1/4), the Northeast Quarter of the Southwest Quarter (NE1/4 SW1/4), the Northwest Quarter of the Southeast Quarter (NW1/4 SE1/4) and that portion of the South Half of the Southeast Quarter (S1/2 SE1/4) lying north of the centerline of State Highway 20 as surveyed and shown on the official plat of the Twin Buttes F-1422(2) Highway Survey on file in the office of the Department of Highway of the State of Idaho, all in Section 26;

All in Township 3 North, Range 34 East of the Boise Meridian, Bonneville County, Idaho, contains four thousand two hundred and ten (4,210) acres, more or less."

1.2.2 Financial Information

AES estimates the total cost of the EREF to be approximately $4.1 billion (in 2007 dollars), excluding escalation, contingency, interest, tails disposition, decommissioning, and any replacement equipment required during the life of the facility.

Pursuant to 10 CFR 70.23(a)(5), AES is required to demonstrate that it is financially qualified to carry out the activities proposed in its application. AES proposes to satisfy this obligation in a manner consistent with the approach previously accepted by the NRC staff in Section 1.2.3.3.2 of NUREG-1851, Safety Evaluation Report for the American Centrifuge Plant in Piketon, Ohio (NRC, 2006). That approach is as follows:

- Construction of each incremental phase of the EREF shall not commence before funding for that increment is available or committed. Of this funding, AES must have in place before constructing such increments, commitments for one or more of the following: equity contributions from AES or its parents, a commitment from the parent company to provide the necessary funds for the project, and lending and/or lease arrangements that solely or cumulatively are sufficient to ensure funding for the particular increment's construction costs. AES shall make available for NRC inspection, documentation of both the budgeted costs for each incremental phase and the source of funds available or committed to pay those costs.
- Operation of the EREF shall not commence until AES has in place either: (1) long term contracts lasting five years or more that provide sufficient funding for the estimated cost of operating the facility for the five year period; (2) documentation of the availability of one or more alternative sources of funds that provide sufficient funding for the estimated cost of operating the facility for five years; or (3) some combination of (1) and (2).

AES shall in accordance with 10 CFR 140.13b, (CFR, 2008b), prior to and throughout operation, have and maintain nuclear liability insurance in the amount of up to $300 million to cover liability claims arising out of any occurrence within the United States, causing, within or outside the United States, bodily injury, sickness, disease, or death, or loss of or damage to property, or loss of use of property, arising out of or resulting from the radioactive, toxic, explosive, or other hazardous properties of chemical compounds containing source or special nuclear material.

The amounts of nuclear energy liability insurance required may be furnished and maintained in the form of:

An effective facility form (non-indemnified facility) policy of nuclear energy liability insurance from American Nuclear Insurers and/or Mutual Atomic Energy Liability underwriters; or

Such other type of nuclear energy liability insurance as the Commission may approve; or

A combination of the foregoing.

If the form of liability insurance will be other than an effective facility form (non-indemnified facility) policy of nuclear energy liability insurance from American Nuclear Insurers and/or Mutual Atomic Energy Liability Underwriters, such form will be provided to the Nuclear Regulatory Commission by AES. The effective date of this insurance will be no later than the date that AES takes possession of licensed nuclear material.

By letter dated December 22, 2008, American Nuclear Insurers documented its expectation to provide nuclear liability insurance for the EREF at the maximum policy limit of $300M by the time AES takes possession of source or special nuclear material. AES will provide proof of liability insurance of a type and in the amounts to cover liability claims required by 10 CFR 140.13b prior to taking possession of source or special nuclear material.

Information indicating how reasonable assurance will be provided that funds will be available to decommission the facility as required by 10 CFR 70.22(a)(9) (CFR, 2008c), 10 CFR 70.25 (CFR, 2008d), and 10 CFR 40.36 (CFR, 2008e) is described in detail in Chapter 10, Decommissioning.

1.2.3 Type, Quantity and Form of Licensed Material

AES proposes to acquire, deliver, receive, possess, produce, use, transfer, and/or store special nuclear material (SNM) meeting the criteria of special nuclear material of low strategic significance as described in 10 CFR 70.4 (CFR, 2008f). Details of the SNM are provided in Table 1.2-1, Type, Quantity, and Form of Licensed Material. Other source materials and by-product materials will also be used for instrument calibration purposes. These materials will be identified during the design phase, and AES will submit a request to amend the Materials License to incorporate the proposed quantities and types for the sealed and unsealed instrument calibration sources to its possession limits. Subsequently, the SAR will be revised to incorporate the additional sources.

1.2.4 Requested Licenses and Authorized Uses

AES is engaged in providing uranium enrichment services to electric utilities for the purpose of manufacturing fuel to be used to produce electricity in commercial nuclear power plants.

This application is for the necessary licenses issued under 10 CFR 70 (CFR, 2008g), 10 CFR 30 (CFR, 2008h) and 10 CFR 40 (CFR, 2008i) to construct, own, use and operate the facilities described herein as an integral part of the uranium enrichment facility. This includes licenses for source, special nuclear material, and byproduct material. The period of time for which the license is requested is 30 years.

Section 1.1, Facility and Process Description, provides a summary description of the enrichment activities that will occur at the EREF.

1.2.5 Special Exemptions of Special Authorizations

In accordance with 10 CFR 40.14 (CFR, 2008j), "Specific exemptions," and 10 CFR 70.17 (CFR, 2008k), "Specific exemptions," AES requests exemptions from certain provisions of 10 CFR 40.36 (CFR, 2008e), "Financial assurance and recordkeeping for decommissioning," paragraph (d), and 10 CFR 70.25 (CFR, 2008d), "Financial assurance and recordkeeping for decommissioning," paragraph (e). Specifically, 10 CFR 40.36(d) (CFR, 2008e) and 10 CFR 70.25(e) (CFR, 2008d) both state in part that "...the decommissioning funding plan must also

contain a certification by the licensee that financial assurance for decommissioning has been provided in the amount of the cost estimate for decommissioning...." As stated in Section 10.2.1, "Decommissioning Funding Mechanism," of the SAR since AES intends to sequentially install and operate modules of the enrichment equipment over time, providing financial assurance for decommissioning during the operating life of the EREF at a rate that is in proportion to the decommissioning liability for these facilities as they are phased in satisfies the requirements of this regulation without imposing the financial burden of maintaining the entire financial coverage for facilities and material that are not yet in existence. The same basis applies to decommissioning funding assurance for depleted uranium tails. As also stated in Section 10.2.1 of the SAR, AES proposes to provide financial assurance for the disposition of depleted uranium tails at a rate in proportion to the amount of accumulated depleted uranium tails onsite up to the maximum amount of the depleted uranium tails produced by the EREF.

The justification for this proposal to provide decommissioning funding assurance on a forward looking incremental basis is AES's commitment to update the decommissioning cost estimates and to provide to the NRC a revised funding instrument for facility decommissioning at a minimum prior to the operation of each facility module. With respect to the depleted uranium tails, AES commits to updating the decommissioning cost estimates on an annual forward looking incremental basis and to providing the NRC revised funding instruments that reflect these projections of depleted uranium tails production. The long-term nature of enrichment contracts allows AES to accurately predict the production of depleted uranium tails. If any adjustments to the funding assurance were determined to be needed during the annual period due to production variations, they would be made promptly and a revised funding instrument would be provided to the NRC.

AES requests that exemptions from the provisions of 10 CFR 40.36(d) (CFR, 2008e) and 10 CFR 70.25(e) (CFR, 2008d) described above be granted. In support of this request, AES provides the following information relative to the criteria in 10 CFR 40.14 (CFR, 2008j) and 10 CFR 70.17 (CFR, 2008k).

<u>Granting the exemption is authorized by law</u>

There is no statutory prohibition to providing decommissioning funding assurance on an incremental basis. In fact, the NRC has previously accepted an incremental approach to decommissioning funding assurance for the United States Enrichment Corporation's (USEC's) operation of its gaseous diffusion plants (NRC, 2006) and for Louisiana Enrichment Services' (LES') operation of the National Enrichment Facility (NEF) (NRC, 2005).

<u>Granting the exemptions will not endanger life or property or the common defense and security</u>

Allowing the decommissioning funding assurance for the EREF to be provided on a forward looking incremental basis continues to ensure that adequate funds are available at any point in time after licensed material is introduced onto the EREF site to decommission the facility and disposition any depleted uranium tails possessed by AES. Accordingly, life, property, or the common defense and security will not be endangered by the EREF once it is permanently shutdown.

<u>Granting the exemptions is otherwise in the public interest</u>

Providing an alternative, diverse, and secure domestic source of enrichment services in support of the nuclear power industry that supplies 20% of the nation's electricity is clearly in the public benefit. Providing decommissioning funding assurance on an incremental basis will ensure that adequate financial assurance is available when required. Imposing the requirement to provide decommissioning funding assurance for the entire facility and all depleted uranium tails that

would be produced over the EREF licensed operating period results in a significant unnecessary financial hardship. Accordingly, the granting of these exemptions is in the public interest.

Since the granting of this exemption does not satisfy any of the criteria for categorical exclusion delineated in 10 CFR 51.22 (CFR, 2008m), "Criteria for categorical exclusion; identification of licensing and regulatory actions eligible for categorical exclusion or otherwise not requiring environmental review," nor the criteria requiring an environmental impact statement in 10 CFR 51.20 (CFR, 2008n), "Criteria for and identification of licensing and regulatory actions requiring environmental impact statements," an environmental assessment is required in accordance with 10 CFR 51.21 (CFR, 2008l), "Criteria for and identification of licensing and regulatory actions requiring environmental assessments." Accordingly, AES proposes that the NRC make a finding of no significant impact based on the following information addressing the provisions of 10 CFR 50.30 (CFR, 2008o), "Environmental assessment."

Need for the proposed action

Granting of the requested exemption will allow AES to satisfy the applicable decommissioning funding assurance requirements for the EREF without imposing an unnecessary financial burden on AES.

Alternatives as required by Section 102(2)(E) of the National Environmental Policy Act (NEPA)

The only alternative to granting the requested exemption is to not grant it. The significant financial burden that would be imposed on AES by not granting the requested exemption is unnecessary.

The environmental impacts of the proposed action and alternatives as appropriate

Granting the requested exemption will not result in environmental impacts in addition to those delineated in the ER for the EREF since adequate funds will continue to be available to decommission the EREF and disposition any depleted uranium tails possessed by AES at any point in time after licensed material is introduced onto the EREF site. The environmental impact of not granting the requested exemption could potentially be the loss of an alternate, diverse, and secure domestic source of enrichment services for the nuclear power industry that supplies 20% of the nation's electricity.

A list of agencies and persons consulted and identification of sources used

The NRC Project Manager for the EREF was contacted. The EREF license application was used as a source.

Based on the above information, AES proposes that, if this exemption request is granted, the NRC reach a finding of no significant impact in accordance with 10 CFR 51.32 (CFR, 2008p), "Finding of no significant impact."

1.2.6 Security of Classified Information

Access to restricted data or national security information will be controlled in accordance with 10 CFR 10 (CFR, 2008q), 25 (CFR, 2008r), and 95 (CFR, 2008s). This license application does contain classified information that is submitted under separate correspondence.

1.3 SITE DESCRIPTION

The proposed site is situated within Bonneville County, Idaho, on the north side of U.S. Highway 20, about 113 km (70 mi) west of the Idaho/Wyoming state line. Portions of Bonneville, Jefferson, and Bingham counties are within 8 km (5 mi) of the proposed site. The approximately 1,700 ha (4,200 ac) property is currently under private ownership by a single landowner. There is a 16-ha (40-ac) parcel within the proposed site, which is administered by the Bureau of Land Management (BLM). The privately held land will be purchased by AES prior to the beginning of construction of the EREF.

There are no right-of-ways on the property with the exception of the right-of-way for U.S. Highway 20, which forms part of the southern boundary of the proposed site. Otherwise, the site is in native rangeland, non-irrigated seeded pasture, and irrigated cropland.

Grazing and cropping are the main land uses within 8 km (5 mi) of the proposed site. State land immediately west of the proposed site and BLM land immediately east of the site are grazed. The Department of Energy's Idaho National Laboratory (INL) eastern boundary is 1.6 km (1 mi) west of the proposed site. The INL property near the site is undeveloped rangeland (Anderson, 1996). The lands north, east, and south of the site are a mixture of private-, State-, and Federal-owned parcels.

The city of Idaho Falls is located about 32 km (20 mi) east southeast from the site. The towns of Rigby and Rexburg are located approximately 23 km (14 mi) and 42 km (26 mi) north of Idaho Falls, respectively. Atomic City is about 32 km (20 mi) west of the site. South of the proposed site are the towns of Blackfoot at 40 km (25 mi) and Pocatello at 76 km (47 mi). The Fort Hall Indian Reservation comprises about 220,150 ha (544,000 ac) and also lies to the south. The nearest boundary of the reservation is about 44 km (27 mi) from the proposed site (Inside Idaho, 2008). The town of Fort Hall is located at a distance of approximately 60 km (37 mi).

Figure 1.3-1, Radial Sectors 5 mi (8 km) Radius, shows the physical features surrounding the facility to an 8 km (5 mi) radius.

1.3.1 Site Geography

Site features are well suited for the location of a uranium enrichment facility as evidenced by the favorable conditions of hydrology, geology, seismology and meteorology as well as good transportation routes for transporting feed, product, and tails by truck.

1.3.1.1 Site Location Specifics

The proposed site is situated in Bonneville County, Idaho, on the north side of U.S. Highway 20, about 113 km (70 mi) west of the Idaho/Wyoming state line. Portions of Bonneville, Jefferson, and Bingham counties are within 8 km (5 mi) of the proposed site. The approximate center of the EREF is located at latitude 43 degrees, 35 minutes, 7.37 seconds North and longitude 112 degrees, 25 minutes, 28.71 seconds West.

Figure 1.1-3, Site Plan With Property and Control Area Boundary, and Figure 1.1-4, Facility Layout, shows the site property boundary, controlled area boundary, and general layout of the buildings.

1.3.1.2 Features of Potential Impact to Accident Analysis

The geologic setting of the proposed site is the Snake River Plain (SRP). The SRP is typically split into western and eastern halves. The proposed site is located in the east-central part of the East Snake River Plain (ESRP), which is bounded on the northern and southern sides by mountain ranges and valleys.

The area of the proposed site is comprised mostly of relatively flat and gently sloping surfaces with small ridges and areas of rock outcrop. Most of the site is semi-arid steppe covered by eolian soils of variable thickness that incompletely cover broad areas of volcanic lava flows. Elevations at the site range from 1,556 m (5,106 ft) to 1,600 m (5,250 ft). Many of the areas with thickest soils and gentle slopes with a minimum of rock outcrop are currently used for crops.

Although most of the areas to the north, east, and south of the ESRP experience earthquake activity along faults related to regional Basin and Range crustal extension, the ESRP is an area of low seismicity.

The ESRP has been structurally and volcanically active since approximately 17 million years ago when this portion of the North American Plate began passing over a feature known as the Yellowstone hotspot. Inundation by basalt lava flows is the most significant volcanic hazard at the proposed site. As a result, a site-specific volcanic hazards analysis has been performed.

There are no underground utilities (industrial gases, natural gas, etc.) other than those required for facility operation on the property.

U.S. Highway 20 forms part of the southern boundary of the proposed site.

The nearest rail lines are several lines and branches of the Union Pacific Railroad that pass through Idaho Falls. The Union Pacific Railroad Aberdeen Branch runs parallel to U.S. Highway 26, about 40 km (25 mi) south of the proposed site, with the Scoville Branch leading onto the Idaho National Laboratory and ending at Scoville Siding. In addition, the Eastern Idaho Rail Road operates short line tracks connecting towns north and east of Idaho Falls to the Union Pacific Line (USCB, 2008).

1.3.2 Demographics

This section provides the census results for the facility site area, and includes specific information about populations, public facilities (schools, hospitals, parks, etc.) and land and water use near the site.

1.3.2.1 Latest Census Results

The combined population of Bonneville, Bingham and Jefferson counties in the EREF vicinity, based on the 2000 U.S. Census, was 143,412. This population represents an average annual increase of 1.4% from the 1990 population of 126,333. This rate of increase is less than experienced by the state of Idaho during the same decade, with a 2.9% average annual increase from the 1990 population of 1,006,749 to the 2000 population of 1,293,953. Over that same 10-year period, Bonneville County had an average annual population increase of 1.4% (from 72,207 to 82,522); Bingham County had an average annual increase of 1.1% (from 37,583 to 41,735); and Jefferson County had an average annual increase of 1.6% (from 16,543 to 19,155).

Based on projections made using historic data, the populations of Bonneville, Bingham and Jefferson counties are likely to grow more slowly than the state of Idaho over the next 30 years (the anticipated license period of the EREF).

Based on US Census Bureau (USCB) data, in 2000 minority populations comprised 7.2% of Bonneville County, 17.6% of Bingham County, and 9.1% of Jefferson County. The percentage for Bonneville County was somewhat lower than the 9.0% for the State of Idaho, Bingham County was significantly greater than the state percentage, and Jefferson County was at about the state level. In 2006, minority populations comprised 5.4% of Bonneville County residents, which was less than the 7.5% of state of Idaho residents. Because of the small population level, the USCB did not provide estimates of minority populations for Bingham County and Jefferson County for 2006.

The term "minority population" is defined for the purposes of the USCB to include the five racial categories of black or African American, American Indian or Alaska Native, Asian, Native Hawaiian or other Pacific Islander, and other races. It also includes those individuals who declared two or more races, an option added as part of the 2000 census. The minority population, therefore, was calculated to be the total population less the white population. In contrast to USCB data, NUREG-1748, Appendix C (NRC, 2003b) defines minority populations to include individuals of Hispanic or Latino origin.

The 10.1% of individuals living below the poverty level in Bonneville County in 2000 was less than the 11.8% in the state of Idaho, but the 12.4% in Bingham County was greater than the state level. In 2006, the percentage of individuals living below the poverty level was 12.3% in Bonneville County, about equal to the 12.6% in the State of Idaho. The percentage of individuals living below the poverty level in Jefferson County was similar to Bonneville County at 10.4%.

1.3.2.2 Description, Distance, and Direction to Nearby Populated Areas

The proposed site is in Bonneville County, Idaho, near the border with Bingham County, Idaho. Jefferson County shares a border with Bonneville County and is linked by Highways 20 and 15. The city of Idaho Falls, Idaho, the closest population center to the site, is at a distance of about 32 km (20 mi). Other population centers are located at about the following driving distances from the site:

- Shelley, Bingham County: 45 km (28 mi) southeast
- Blackfoot, Bingham County: 77 km (48 mi) southeast
- Pocatello, Bannock County: 113 km (70 mi) south
- Rexburg, Madison County: 82 km (51 mi) northeast
- St. Anthony, Freemont County: 101 km (63 mi) northeast

Aside from these communities, the population density around the site and region is generally low. The nearest large population centers (>100,000) are Boise, Idaho which is approximately 306 km (190 mi) to the west and Salt Lake City, Utah which is approximately 316 km (196 mi) to the south.

1.3.2.3 Proximity to Public Facilities – Schools, Hospitals, Parks

The nearest churches are located in Idaho Falls, approximately 32 km (20 mi) east of the proposed site.

There are three hospitals in Bonneville County, all located in Idaho Falls approximately 32 km (20 mi) east of the proposed site. The Eastern Idaho Regional Medical Center is the largest of three hospitals. It is a short-term acute care hospital with 242 beds. The Idaho Falls Recovery Center is a 7-bed acute care facility and the Mountain View Hospital is a 20-bed acute care facility. There are also 4 nursing homes or retirement facilities in the area.

The closest schools in Bonneville County are in Idaho Falls, approximately 32 km (20 mi) east of the proposed site. The Swan Valley School District 92 is also in Bonneville County and is located about 72 km (45 mi) east of Idaho Falls.

Public use areas include a hiking trail south of the proposed site in Hell's Half Acre Wilderness Study Area (WSA) and a small lava tube cave located approximately 8 km (5 mi) east and south (BLM, 2008).

There are four fire departments within about a 48-km (30-mi) radius of the site; the Idaho Falls Fire Department, the Ucon Volunteer Fire Department, the Shelley Firth Rural Fire Department, and the Central Fire District which operates in Jefferson County. Fire support service for Idaho Falls is provided by the Idaho Falls Fire Department, located approximately 32 km (20 mi) from the EREF.

The closest other public use facilities are located in Idaho Falls.

1.3.2.4 Nearby Industrial Facilities (Includes Nuclear Facilities)

Nuclear Facilities

The Department of Energy's Idaho National Laboratory (INL) eastern boundary is 1.6 km (1 mi) west of the proposed site. The INL property near the site is undeveloped rangeland (Anderson, 1996). The closest facility on the INL property is the Materials and Fuels Complex (MFC), located approximately 16 km (10 mi) west of the proposed site boundary.

Non-Nuclear Facilities

The city of Idaho Falls is located about 32 km (20 mi) east southeast from the site. Several lines and branches of the Union Pacific Railroad pass through Idaho Falls. The Union Pacific Railroad Aberdeen Branch runs parallel to U.S. Highway 26, about 40 km (25 mi) south of the proposed site, with the Scoville Branch leading onto the Idaho National Laboratory and ending at Scoville Siding. In addition, the Eastern Idaho Rail Road operates short line tracks connecting towns north and east of Idaho Falls to the Union Pacific Line (USCB, 2008).

There are landfills in Jefferson, Bonneville, and Bingham counties and two waste transfer stations in Bonneville County.

The nearest commercial carrier airport is Fanning Field (Idaho Falls Regional Airport) in Idaho Falls about 32 km (20 miles) from the site. Pocatello Regional Airport is located in Pocatello, about 113 km (70 mi) south of the site.

1.3.2.5 Land Use Within Eight Kilometers (Five Mile) Radius, Uses of Nearby Bodies of Water

Rangeland comprises 53% of the area within an 8 km (5 mi) radius of the proposed site. The rangeland, typical of that found in southeastern Idaho, is composed of shrub and herbaceous vegetation and supports livestock grazing and wildlife.

Non-irrigated seeded pasture comprises 10% of the area within the 8-km (5-mi) radius. Non-irrigated seeded pastures are areas where native rangelands have been cleared to create improved pasture for livestock grazing.

Agricultural land comprises 18% of the area within an 8-km (5-mi) radius of the proposed site. There are no agricultural lands in Bingham County. The agricultural lands are used primarily for production of food and fiber.

Barren land, comprised of bare exposed rock and volcanic flows constitutes the other land use classification in the proposed site vicinity, is 19% of land area.

There are no intermittent or perennial waterbodies or jurisdictional wetlands on the proposed site.

The proposed facility would use groundwater for both process and potable water requirements. No surface water would be used. The collection and storage of runoff from specific site areas would be controlled. No significant adverse changes are expected in site hydrology as a result of construction or operation of the proposed facility. ER Section 4.4.7, Control of Impacts to Water Quality, addresses the potential impacts to water resources as a result of activities on the site.

1.3.3 Meteorology

In this section, data characterizing the meteorology (e.g., winds, precipitation, and severe weather) for the site are presented.

The meteorological conditions at the EREF have been evaluated and summarized in order to characterize the site climatology and to provide a basis for predicting the dispersion of gaseous effluents. Meteorological data was obtained from Idaho Falls 2 ESE and Idaho Falls 46 W, which are cooperative weather stations. Weather station Idaho Falls 46 W is located on the property of the INL, is operated by NOAA staff, and is part of the 33-station meteorological network of the Air Resources Laboratory Field Research Division (ARLFRD) of NOAA. Meteorological data has also been obtained from ARLFRD for two additional stations located closer to the EREF site. These stations are identified as Argonne National Lab-West (EBR) and Kettle Butte (KET).

1.3.3.1 Primary Wind Direction and Average Wind Speeds

The annual average wind speed at Idaho Falls 46W, KET and EBR are 3.4 m/s (7.5 mph), 5.5 m/s (12.2 mph) and 4.2 m/s (9.3 mph), respectively. The highest hourly average wind speed at both Idaho Falls 46W and KET is 23 m/s (51 mph). The highest hourly average wind speed at EBR is 19 m/s (43 mph). The wind directions for all of the highest hourly average wind speeds are from the west-southwest.

These and additional data are discussed and further analyzed in Section 3.6 of the Environment Report.

1.3.3.2 Annual Precipitation – Amounts and Forms

Air masses approaching the EREF location must cross over significant mountain ranges prior to their arrival in southeastern Idaho. In doing so, the majority of the moisture contained in these air masses condenses and precipitates over the mountains. As the air masses descend from the mountains, they warm adiabatically and become relatively dry. As a result, annual precipitation in the vicinity of the EREF is quite light. The data indicate that precipitation occurs infrequently (less than 3% of the time) and that precipitation intensity is predominately less than 0.1 in (2.54 millimeters).

The type of precipitation at the EREF location varies with the seasons. Convective showers and thundershowers occur in the summer. Precipitation during the spring and fall can be characterized as showery or as a steadier rainfall. Winter precipitation is typically in the form of snow which can occur anytime from September through May.

Annual average precipitation at Idaho Falls 2 ESE is 360.93 mm (14.21 in). This precipitation falls fairly evenly throughout the year with the exception of the month of May, which exhibits a significant spike in precipitation. The highest recorded monthly precipitation total is 115.82 mm (4.56 in). There have been several months in the 30-year period of record when no precipitation has been recorded.

Annual average precipitation at Idaho Falls 46 W is considerable less than what occurs at Idaho Falls 2 ESE and measures 224.03 mm (8.82 in). The precipitation pattern of these two locations is somewhat similar in that precipitation falls fairly evenly throughout the year with the exception of a precipitation maximum in May. The highest recorded precipitation total at Idaho Falls 46 W is 117.86 mm (4.64 in).

Over the 30-year period of record, precipitation has always fallen at some time during the months of January, May, June, and August. Over the same period of record, there have been at least ten months when no precipitation has been recorded. The highest daily precipitation event recorded over the 48-year period of record is 41.66 mm (1.64 in).

The annual average snowfall for Idaho Falls 2 ESE is 833.12 mm (32.8 in). The highest daily snowfall at this location is 254 mm (10 in). The highest monthly snowfall is 571.5 mm (22.5 in). The highest daily snow depth is 660.4 mm (26 in).

The annual average snowfall for Idaho Falls 46 W is 637.54 mm (25.1 in). The highest daily snowfall at this location is 218.44 mm (8.6 in). The highest monthly snowfall is 566.42 mm (22.3 in) occurring in December 1971. The highest daily snow depth is 762 mm (30 in).

Additional details on rainfall and snowfall are provided in Section 3.6 of the Environmental Report.

The design basis snow load was developed by combining the “building code” snow load with the additional surcharge from an extreme winter precipitation event. This is consistent with the guidance provided by NRC in the Site Analysis Branch Position for Winter Precipitation Loads (NRC, 1975). The ground “building code” snow load for the EREF was determined to be 44.2 lb/ft^2 (216 kg/m^2).

The ground snow load at 44.2 lb/ft^2 for the EREF was determined as follows:

- Snow depth data (collected from the National Weather Service) at locations within close proximity to the EREF site that had a long period of record with similar climate conditions were used to compute L-moment parameters, were applied to Generalized Extreme Value (GEV) frequency distributions and used to estimate the 50-year return values.

- Snow course data, snow depth and snow water equivalent (SWE) (collected from the National Resources Conservation Service) at two locations near the EREF site that had a long period of record with similar climate conditions were used to create a snow depth/density relationship between snow depth and SWE.
- The 50-year snow depth data was converted into snow loads and spatially distributed to obtain the estimate at the EREF site. The ground snow load was estimated from spatial interpolation of the station snow load values.

This ground snow load will be converted to a roof snow load in accordance with ASCE 7-05 (ASCE, 2006). The extreme winter precipitation event results in a load of 19 lb/ft^2 (93 kg/m^2). This value will be combined with the appropriate building code roof snow load for use as the design basis snow load.

The transport of ash to the EREF from future cascade tephra eruptions was considered. The maximum ash thickness that could be deposited at the EREF is less than 8 cm. The load of ash (8 cm) would range from 8.2 lb/ft^2 (40 kg/m^2) (dry) to 20.5 lb/ft^2 (100 kg/m^2) (wet), which is bounded by both the extreme environmental snow load and normal ground snow load for the EREF.

1.3.3.3 Severe Weather

Tornadoes

The total number of tornadoes in the four-county region encompassing the Eagle Rock Enrichment Facility site for the 58-year (1/1/1950-4/30/2008) period of record is 40. In addition to the tornado activity described above, 12 funnel clouds were sighted during the 58-year period of record in the four-county region.

Tornadoes are commonly classified by their intensity. The F-Scale classification ranks tornadoes based on the level of observable damage, with F0 being the weakest and F5 the strongest. One F2 tornado was sighted in the four-county region during the 58-year period of record. That tornado occurred in Bonneville County on April 7, 1978, causing $2.5 million in damage and one injury. All other tornadoes were either F0 (20 occurrences) or F1 (19 occurrences).

The likelihood of a tornado occurring within any 1,000 square mile area in the vicinity of the EREF site is 0.09 tornadoes per year per 1,000 square miles. The probability of a tornado developing at the Eagle Rock Enrichment Facility site is very small.

Hurricanes

Hurricanes, or tropical cyclones, are low-pressure weather systems that develop over the tropical oceans. Hurricanes are fueled by the relatively warm tropical ocean water and lose their intensity quickly once they make landfall. The EREF is not in the vicinity of any ocean and is protected by mountains; therefore hurricanes are not considered a credible threat.

Thunderstorms and Lightning Strikes

The NCDC Storm Event Database (NOAA, 2008a) was used to obtain information on thunderstorms in the vicinity of the EREF site). The period of record available for review was January 1, 1955 to April 30, 2008. The area of interest was a four-county area surrounding the EREF and included Bonneville, Bingham, Butte and Jefferson counties. Based on a review of the database, there were 228 thunderstorm days during the 53-year period of record or 4.3 thunderstorm days per year. Several individual thunderstorms may occur during each of the

thunderstorm days. Thunderstorm days can occur during every month of the year; however, they are most prevalent during the months of March through October.

The lightning data contained in the NCDC Storm Event Database are lightning events that result in fatality, injury and/or property and crop damage. According to the database there were nine lightning strikes in the four-county region encompassing the EREF site between January 1, 1950 and May 31, 2008. According to ARLFRD, the INL is not frequently struck by lightning. The INL is located immediately west of the EREF site.

The current methodology (Marshall, 1973) for estimating lightning strike frequencies includes consideration of the attractive area of structures. This method consists of determining the number of lightning flashes to earth per year per square kilometer and then defining an area over which the structure can be expected to attract a lightning strike.

Using this methodology, the attractive area of the facility structures and the Cylinder Storage Pads has been conservatively determined to be 0.75 km^2 (0.29 mi^2). Using 1 flash to earth per year per square kilometer (2.59 flashes to earth per year per square mile) (NOAA, 2008b), it can be estimated that the EREF will experience approximately 0.75 flashes to earth per year.

Sandstorms

The EREF site is located in a semi-arid environment and, as a result, blowing dust and drifting sand can be a nuisance when the winds are strong in certain areas of the ESRP. Vehicular traffic and construction equipment are also significant contributors to high dust concentrations. These conditions may particularly affect the activities of construction personnel during the spring months after the winter thaw when strong frontal systems pass through the ESRP and during the summer months when thunderstorms are near. During the daylight hours under conditions of strong winds, the concentration of dust sharply decreases with height up to 21 m (70 ft) above grade level.

1.3.4 Hydrology

Much of the information included in this section was obtained from prior studies, including extensive subsurface investigations for the Department of Energy Idaho National Laboratory (INL), which is located immediately west of the proposed site, as well as regional studies conducted by the U.S. Geologic Survey and the State of Idaho. Literature searches were conducted to obtain additional reference material. This information is supplemented by subsurface investigations conducted at the EREF site.

The proposed EREF site contains no surface water bodies. There are a few small drainage features in the southeastern and southwestern areas of the proposed site. These drainages likely originated from natural erosional processes but now primarily conduct minor amounts of water from irrigated areas.

The Snake River is located about 32 km (20 mi) to the east of the proposed facility. The Snake River Plain (SRP) aquifer is the predominant water bearing unit in the area. At the site, groundwater is encountered at depths between 199.5 m (654.4 ft) and 219.4 m (719.9 ft) below ground surface (bgs). This SRP aquifer covers about 26,000 km^2 (10,039 mi^2) with a thickness ranging between 91 m (300 ft) and 396 m (1,299 ft) thick (Smith, 2004). The water volume in the aquifer is estimated at 100 billion m^3 (3.53E+12 ft^3) (Smith, 2004).

1.3.4.1 Characteristics of Nearby Rivers, Streams, and Other Bodies of Water

The proposed facility is located in an area with no surface water bodies. The predominant regional direction of groundwater flow is from the northeast to southwest (Smith, 2004) (Whitehead, 1994). The closest surface water bodies are the Snake River and the Market Lake Wildlife Management Area (WMA). These two surface water bodies are located about 32 km (20 mi) to the east and northeast of the site, respectively.

1.3.4.2 Depth to Groundwater Table

Site-specific subsurface investigations occurred at the proposed EREF site between May and July 2008. Five deep monitoring wells were installed at the proposed site. One shallow well was also completed. These monitoring wells on the proposed site are distributed to allow monitoring of the ground water elevations, evaluation of regional groundwater flow direction, and water quality at the EREF site. The wells are located in areas that are hydrologically upgradient, cross gradient, downgradient of the plant footprint, and within the downgradient edge of the facility footprint. The five deep wells provide adequate site-specific data to define the potentiometric surface of the groundwater, thereby providing data indicative of groundwater flow direction and gradient.

Groundwater was encountered at depths between 199.5 m (654.4 ft) and 219.4 m (719.9 ft)below ground surface (bgs).

1.3.4.3 Groundwater Hydrology

The groundwater system underlying the Snake River Plain (SRP) in the vicinity of the EREF is referred to as the ESRP aquifer. The ESRP Aquifer consists predominantly of flood basalt lava flows with intermittent interbeds of unconsolidated sediments. The geologic units comprising the aquifer are primarily lava flows of the Snake River Group basalts (Qb) and the upper part of the Idaho Group (Bruneau Formation). The basalt units are variable in thickness and generally discontinuous in lateral extent. Sedimentary interbeds exist between some of the basalts and are of variable thickness and lateral extent. At the site, groundwater is encountered at depths between 199.5 m (654.4 ft) and 219.4 m (719.9 ft) below ground surface (bgs).

The ESRP Aquifer is unconfined over nearly all of its area through locally confined conditions may exist. The overlying unsaturated zone or vadose zone is spatially heterogeneous and ranges in thickness from 60 m (200 ft) to greater than 300 m (984 ft) and consists of unconsolidated alluvium and Snake River Group basalts (Qb). The saturated thickness of the aquifer is greatest in the central part of the ESRP and thins substantially to the west. Within the basalts, permeable zones are located mainly in the tops and bottoms of lava flows, which are typically fractured and porous, leading to high horizontal hydraulic conductivity. Vertical joint densities and presence of lower permeability sediment interbeds act to control vertical hydraulic conductivity. The interbeds may also act to locally confine limited portions of the aquifer. Overall, the fractured, porous, and complexly interconnected nature of the basaltic lava flows has resulted in high but heterogeneous and anisotropic horizontal conductivity and much lower vertical conductivity.

1.3.4.4 Characteristics of the Uppermost Aquifer

The SRP aquifer is the predominant water bearing unit in the area. At the site, the groundwater surface is encountered at depths between 199.5 m (654.4 ft) and 219.4 m (719.9 ft) below ground surface (bgs). This SRP aquifer covers about 26,000 km^2 (10,039 mi^2) with a thickness

ranging between 91 m (300 ft) and 396 m (1,299 ft) thick (Smith, 2004). The water volume in the aquifer is estimated at 100 billion m^3 (3.53E+12 ft^3) (Smith, 2004). The SRP aquifer is a major economic resource in southern Idaho that is relied upon for both drinking water and irrigation (Garabedian, 1992) (Lindholm, 1996).

The proposed facility would use groundwater for both process and potable water requirements. No surface water would be used. The collection and storage of runoff from specific site areas would be controlled.

1.3.4.5 Design Basis Flood Events Used for Accident Analysis

The EREF site is located above the 100 or 500-year flood elevation (FEMA, 1981). The proposed facility is not located near any reservoirs, levees or surface waters that could cause flooding of the plant site. The proposed site is contained within the Idaho Falls watershed, HUC 17040201, with gradual average slopes of about 1.4%. The Natural Resources Conservation Service soil survey data summary indicates that soils typically have no potential for ponding (NRCS, 2008b). Any onsite precipitation will be subject to evapotranspiration or infiltration. Minor intermittent drainages originating within the site boundary do not connect to off-site resources or larger drainages. The largest surface water body southwest of the proposed site (along the topographical grade) is Lake Wolcott, approximately 120 km (75 mi) from the proposed site and the Snake River about 32 km (20 mi) east of the site. Therefore, no credible sources of river or upstream dam flooding exist at the site. No special design considerations for local intense precipitation are necessary to prevent flooding at the proposed site other than stormwater runoff controls.

Therefore, a flood is not considered to be a design basis event for the EREF site.

1.3.5 Geology

This section provides information about the characteristic geology of the EREF site and its vicinity and design-basis earthquake magnitudes and return periods. AES performed literature searches and conducted subsurface investigations to determine site-specific conditions.

The proposed EREF site lies within the SRP volcanic field of southeast Idaho approximately 32 km (20 mi) west northwest of Idaho Falls, Idaho. The SRP is an arc shaped (convex south) belt of topographically subdued volcanic and sedimentary rocks. Geologists have divided the SRP into eastern (ESRP) and western (WSRP) segments, based on physiographic features described above and tectonic characteristics. The EREF site is located close to the center of the ESRP, near the southeastern corner of the Idaho National Laboratory (INL). The ESRP has been structurally and volcanically active since approximately 17 million years ago (Ma) when this portion of the North American Plate began passing over a feature known as the Yellowstone hotspot.

The surface area of the proposed site is comprised mostly of relatively flat semi-arid steppe covered by eolian soils of variable thickness that incompletely cover broad areas of rock outcrop. The outcrops exist in the form of low irregular ridges, small areas of thin soils mixed with blocky rubble, and as erosional surfaces in intermittent stream drainages. The outcrops at the proposed site are comprised of basaltic lava flows that originated from nearby vent and fissure systems. Elevations at the site range from 1,556 m (5,106 ft) to 1,600 m (5,250 ft). The finished site grade ranges from 1573 m (5,161 ft) to 1585 m (5200 ft).

1.3.5.1 Characteristics of Soil Types and Bedrock

Soil cover in the ESRP is variable, ranging from non-existent in areas of recent volcanism to tens of meters (tens of feet) in thickness in areas of wind-blown loess derived from exposed lava flows, lacustrine deposits, and alluvial fill. Thin soils and basalt outcrops are common along ridge lines and wind-swept areas of the axial volcanic zone, in which the EREF site is location.

The U. S. Department of Agriculture soil survey for Bonneville County, Idaho (NRCS, 2008) categorizes most of the soils at the proposed site as Pancheri silt loams with slopes ranging from 0 to 8 percent (50 to 75% of the area). The Pancheri series consists of deep and very deep, well-drained soils that formed in loess covered lava plains (NRCS, 2008). The taxonomic class for the Pancheri series is coarse-silty, mixed, superactive, frigid Xeric Haplocalcids. This description is consistent with detailed studies of soils at the nearby INL where they are described as falling mostly in the silt-loam textural class with 0 to 27% clay, 55 to 80% silt, and 10 to 35% sand (Nimmo, 2004).

The drainage and permeability of the Pancheri series are described as well-drained, medium or slow runoff, moderate permeability (NRCS, 2008). The remainder of the proposed site is characterized as Polatis-rock outcrop complex, Pancheri-rock outcrop complex, and lava flows.

ESRP stratigraphy is composed of igneous and sedimentary rocks over 3048 m (10,000 ft) thick (Doherty, 1979). The products of rhyolitic, andesitic, and basaltic volcanism, have been interspersed with sedimentary fluvial, lacustrine, and eolian (wind) deposits. The thickness and lateral extent of the volcanic deposits varies greatly in response to the composition, volume, and location of the erupted material. Most of the ESRP is covered with basaltic materials. Deep boreholes on the adjacent INL have intersected nearly 1 km (0.6 mi) of late Tertiary and Quaternary basalt lava flows and interbedded sedimentary deposits overlying older silicic tuffs.

1.3.5.2 Earthquake Magnitudes and Return Periods

The site is situated in a less seismically active region of the ESRP. Introduction and solidification of molten volcanic materials in ESRP fracture zones as they developed in the past is believed to be a possible mechanism responsible for the present low level of seismic activity (Parsons, 1991). Most of the areas to the north, east, and south of the ESRP experience earthquake activity along faults related to regional Basin and Range crustal extension. The ESRP, however, is an area of low present-day seismicity.

The November 11, 1905 Shoshone earthquake is the largest earthquake reported for the eastern Snake River Plain within which the site is located. This earthquake has an estimated magnitude of 5.3 to 5.7. The epicenter is considered to be 180 km (112 mi) west southwest of the EREF site. Due to the occurrence of this earthquake prior to seismograph monitoring in the region, the epicenter could be uncertain by 100 km (62 mi) or more (INL, 2008). The event could have an epicenter in the adjacent Basin and Range province that exhibits higher rates of seismic activity than the ESRP. This earthquake, however, is analyzed in the EREF site-specific probabilistic seismic hazard assessment (PSHA) as being associated with the ESRP.

In site-specific PSHA, seismic ground motion amplitudes in bedrock were determined for annual frequencies of exceedance ranging from of 10^{-2} to 10^{-5}. Uniform hazard response spectra (UHRS) were determined for top of bedrock for annual frequencies of exceedance of 10^{-3}, 10^{-4}, and 10^{-5}. The associated peak horizontal ground motion is 0.063g, 0.150g, and 0.299g, respectively.

1.3.5.3 Other Geologic Hazards

The EREF site is located close to the center of the ESRP, near the southeastern corner of the INL. The ESRP has been structurally and volcanically active since approximately 17 Ma when this portion of the North American Plate began passing over a feature known as the Yellowstone hotspot. Inundation by basalt lava flows is the most significant volcanic hazard at the proposed site. During the past 4.3 Ma, the ESRP has been repeatedly inundated by basaltic lava flows, which today are exposed over about 58 percent of the INL area and are found in subsurface wells and boreholes across most of the ESRP. As a result, a site-specific volcanic hazards analysis was performed. The analysis determined the estimated mean annual probability (preferred value) of lava inundation at the proposed EREF site is 5×10^{-6}. The estimated upper and lower bounds of the annual probability distribution span two orders of magnitude, from 10^{-5} to $\times 10^{-7}$ respectively.

There are no other known geologic hazards that would adversely impact the EREF site.

1.4 REFERENCES

Anderson, 1996. Plant communities, Ethoecology, and Flora of the Idaho National Engineering Laboratory (INEL), Environmental Science and Research Foundation Report Series, Number 005, J. E. Anderson, et al., 1996.

ASCE, 2006. Minimum Design Loads for Buildings and Other Structures, ASCE 7-05, American Society of Civil Engineers, 2006.

CFR, 2008a. Title 10, Code of Federal Regulations, Part 61, Licensing Requirements for Land Disposal of Radioactive Waste, 2008.

CFR, 2008b. Title 10, Code of Federal Regulations, Section 140.13b, Amount of liability insurance required for uranium enrichment facilities, 2008.

CFR, 2008c. Title 10, Code of Federal Regulations, Section 70.22, Contents of applications, 2008.

CFR, 2008d. Title 10, Code of Federal Regulations, Section 70.25, Financial assurance and recordkeeping for decommissioning, 2008.

CFR, 2008e. Title 10, Code of federal Regulations, Section 40.36, Financial assurance and recordkeeping for decommissioning, 2008.

CFR, 2008f. Title 10, Code of Federal Regulations, Section 70.4, Definitions, 2008.

CFR, 2008g. Title 10, Code of Federal Regulations, Part 70, Domestic Licensing of Special Nuclear Material, 2008.

CFR, 2008h. Title 10, Code of Federal Regulations, Part 30, Rules of General Applicability to Domestic Licensing of Byproduct Material, 2008.

CFR, 2008i. Title 10, Code of Federal Regulations, Part 40, Domestic Licensing of Source Material, 2008.

CFR, 2008j. Title 10, Code of Federal Regulations, Section 40.14, Specific exemptions, 2008.

CFR, 2008k. Title 10, Code of Federal Regulations, Section 70.17, Specific exemptions, 2008.

CFR, 2008l. Title 10, Code of Federal Regulations, Section 51.21, Criteria for and identification of licensing and regulatory actions requiring environmental assessments, 2008.

CFR, 2008m. Title 10, Code of Federal Regulations, Section 51.22, Criteria for categorical exclusion; identification of licensing and regulatory actions eligible for categorical exclusion or otherwise not requiring environmental review, 2008.

CFR, 2008n. Title 10, Code of Federal Regulations, Section 51.20, Criteria for and identification of licensing and regulatory actions requiring environmental impact statements, 2008.

CFR, 2008o. Title 10, Code of Federal Regulations, Section 50.30, Environmental assessment, 2008.

CFR, 2008p. Title 10, Code of Federal Regulations, Section 51.32, Finding of no significant impact, 2008.

CFR, 2008q. Title 10, Code of Federal Regulations, Part 10, Criteria and Procedures for Determining Eligibility for Access to Restricted Data or National Security Information or an Employment Clearance, 2008.

CFR, 2008r. Title 10, Code of Federal Regulations, Part 25, Access Authorization for Licensed Personnel, 2003.

CFR, 2008s. Title 10, Code of Federal Regulations, Part 95, Security Facility Approval and Safeguarding of National Security Information and Restricted Data, 2003.

Doherty, 1979. Preliminary geological interpretation and lithologic log of the exploratory geothermal test well (INEL-1), Idaho National Engineering Laboratory, eastern Snake River Plain, Idaho. United States Geologic Survey Open-File Report. 79-1248.

FEMA, 1981. Flood Map, Bonneville County, Idaho, Map ID: FM1600270025C, Website: http://msc.fema.gov, Date accessed: August 8, 2007.

Garabedian, 1992. Hydrogeology and Digital Simulation of the Regional Aquifer System, Eastern Snake River Plain, Idaho. U.S. Geol. Surv. Prof. Paper PP-1408-F, U.S. Government Printing Office, Washington, D.C., S.P. Garabedian, 1992.

IBC, 2006. International Building Code, International Code Council, Inc., 2006.

INL, 2008. Idaho National Laboratory Seismic Monitoring, Website: http://www.inl.gov/geosciences/earthquakes.shtml, Date accessed: November 17, 2008.

LES, 2005. Louisiana Energy Services (LES). "National Enrichment Facility Safety Analysis Report," Revision 6, 2005.

Lindholm, 1996. Summary of Snake River Plain Regional Aquifer-System Analysis in Idaho and eastern Oregon, U.S. Geol. Surv. Prof. Paper 1408-A., U.S. Government Printing Office, Washington, DC, G. F. Lindholm.

Marshall, 1973. J.L. Marshall, Lightning Protection, 1973

Nimmo, 2004. Hydraulic and Geochemical Framework of the Idaho National Engineering and Environmental Laboratory Vadose Zone. Vadose Zone Journal 3, J.R. Nimmo, J.P. Rousseau, K.S. Perkins, K.G. Stollenwerk, P.D. Glynn, R.C. Bartholomay, and L.L. Knobel, 2004.

NOAA, 2008a. National Oceanic and Atmospheric Administration, Query Results of the Storm Event Database for Bingham, Bonneville, Butte and Jefferson Counties, ID, National Climatic Data Center, Asheville, NC, July 2008.

NOAA, 2008b. Colorado Lightning Resource Center, National Oceanic and Atmospheric Administration, National Weather Service, 2008.

NRC, 1975. Site Analysis Branch Position for Winter Precipitation Loads, U.S. Nuclear Regulatory Commission, March 24, 1975.

NRC, 2002. Standard Review Plan for the Review of a License Application for a Fuel Cycle Facility, NUREG-1520, U.S. Nuclear Regulatory Commission, March 2002.

NRC, 2003a. Louisiana Energy Services Policy Issues, Letter, R. Pierson, USNRC, to R. Krich, LES, dated March 24, 2003.

NRC, 2003b. Environmental Review Guidance for Licensing Actions Associated with NMSS Programs, NUREG-1748, August 2003.

NRC, 2005. Safety Evaluation Report for the National Enrichment Facility in Lea County, New Mexico, NUREG-1827, U.S. Nuclear Regulatory Commission, June 2005.

NRC, 2006. Safety Evaluation Report for the American Centrifuge Plant in Piketon, Ohio, NUREG-1851, U.S. Nuclear Regulatory Commission, September 2006.

NRCS, 2008. Natural Resource Conservation Service, Web Soil Survey, Website: http://websoilsurvey.nrcs.usda.gov/app/, Date accessed: April 10, 2008.

Parsons, 1991. The Role of Magma Overpressure in Suppressing Earthquakes and Topography: Worldwide Examples, Science, 253-5023: 1399-1402, Parsons and Thompson, 1991.

Smith, 2004. Geologic Setting of the Snake River Plain Aquifer and Vadose Zone. Vadose Zone J., 3, R.P. Smith, 2004.

USCB, 2008. U.S. Census Bureau, GIS data depot, 2008, Census TIGER 2006 data, Website: http://data.geocomm.com/, Date accessed: June 16, 2008.

Whitehead, 1994. Ground Water Atlas of the United States, Idaho, Oregon, Washington, HA 730-H, U.S. Geological Survey, R.L. Whitehead, 1994.

TABLES

Table 1.1-1 Estimated Annual Gaseous Effluent
(Page 1 of 1)

Area		Discharge Rate m^3/yr (SCF/yr) (STP)
Gaseous Effluent Vent System	NA	2.6×10^8 (9.18×10^9)
HVAC Systems	NA	
Radiological Areas	NA	1.93×10^9 (max) (6.8×10^{10})
Non-Radiological Areas	NA	2.2×10^9 (max) (7.8×10^{10})
Total Gaseous HVAC Discharge	NA	4.13×10^9 (max) (14.6×10^{10})
Constituents:	**Quantity (yr^1)**	
Helium	880 m^3(STP) (31,080 ft^3)	NA
Nitrogen	104 m^3 (Liquid) (3,672 ft^3)	NA
Ethanol	80 L (21.1 gal)	NA
Laboratory Compounds	Traces (HF)	NA
Argon	380 m^3 (STP) (13,420 ft^3)	NA
Hydrogen Fluoride	<2.0 kg (<4.4 lb)	NA
Uranium	<20 g (<0.0441 lb)	NA
Methylene Chloride	800 L (211 gal)	NA
Thermal Waste:		
Summer Peak	55.2×10^9 J/hr (52.3×10^6 BTU/hr)	NA
Winter Peak	78×10^9 J/hr (74×10^6 BTU/hr)	NA

Table 1.1-2 Estimated Annual Radiological and Mixed Wastes
(Page 1 of 1)

Waste Type	Radiological Waste		Mixed Waste[2]	
	Total Mass kg (lb)	Uranium Content kg (lb)	Total Mass kg (lb)	Uranium Content kg (lb)
Activated Carbon	600 (1,323)	50 (110)	--	--
Activated Alumina	4,320 (9,524)	4.4 (9.7)	--	--
Perfluoropolyether Oil	2,054 (4,528)	10 (22)	--	--
Liquid Waste Treatment Sludge[6]	2,086 (4,599)	114 (251)[4]	--	--
Activated Sodium Fluoride[1]	--	--	--	--
Assorted Materials (paper, packing, clothing, wipes, etc.)	4,200 (9,259)	60 (132)	--	--
Ventilation Filters	92,196(203,259)	11(24)	--	--
Non-Metallic Components	10,000 (22,050)	Trace[5]	--	--
Miscellaneous Mixed Wastes (organic compounds)[2, 3]	--	--	100 (220)	4 (8.8)
Combustible Waste	7,000 (15,436)	Trace[5]	--	--
Scrap Metal	24,000 (52,920)	Trace[5]	--	--

1. No NaF wastes are produced on an annual basis. The Dump System NaF traps are not expected to saturate over the life of the plant.
2. A mixed waste is a radioactive waste containing listed or characteristic hazardous wastes as specified in 40 CFR 261, subparts C and D (CFR, 2008i).
3. Representative organic compounds consist of acetone, toluene, ethanol, and petroleum ether.
4. The value of 114 kg (251 lb) is composed of uranium in the citric acid and degreaser tanks, precipitated aqueous solutions, uranium in precipitated laboratory/miscellaneous effluents, and uranium in sludge from the citric acid and degreaser tanks.
5. Trace is defined as not detectable above naturally-occurring background concentrations.
6. Consists of sludge and evaporator concentrates.

Table 1.1-3 Estimated Annual Liquid Effluent
(Page 1 of 1)

Effluent	Typical Annual Quantities m^3 (gal)	Typical Uranic Content kg (lb)
Contaminated Liquid Process Effluents:		
Laboratory Effluent/Floor Washings/Miscellaneous Condensates	46.28 (12,226)	32 (70.5)[1]
Degreaser Water	7.42 (1,960)	37 (81.6)[1]
Spent Citric Acid	5.44 (1,437)	44 (98)[1]
Total Effluent Discharged[2] to Atmosphere by Evaporation via Liquid Effluent System Evaporator:	59.1(15,625) [2]	N/A [2]
Sanitary Waste:	18,653 (4,927,500)	None
Storm Water Discharge:		
Gross Discharge[3]	420,090 (110,976,000)	None

1. Uranic quantities are before treatment. Volumes for degreaser water and spent citric acid include process tank sludge.
2. Total annual effluents to atmosphere by evaporation via liquid effluent system evaporator is approximately 59,100 L (15,625 gal) with total uranic input approximately 114 kg (251 lb). Effluents are treated to remove uranic content by precipitation, filtration, and evaporation and discharged to atmosphere. The anticipated atmospheric distillate release is expected to be < 0.356 g/yr (1.26E-03 oz/yr) of total uranium. The EREF design precludes operational process discharges from the plant to surface or groundwater.
3. Maximum gross discharge is based on total annual mean precipitation falling on the developed site area associated with runoff to the Site Storm Water Detention Basin and the Cylinder Storage Pads Storm Water Retention Basins, neglecting infiltration into the site soil and evaporation.

Table 1.1-4 Estimated Annual Non-Radiological Wastes
(Page 1 of 1)

Waste	Annual Quantity
Spent Blasting Sand	249.5 kg (550 lbs)
Miscellaneous Combustible Waste	13,472 kg (29,700 lbs)
Cutting Machine Oils	90 L (23.8 gal)
Spent Degreasing Water (from clean workshop)	2 m^3 (528 gal)
Spent Demineralizer Water (from clean workshop)	400 L (106 gal)
Empty Spray Paint Cans*	40 each
Empty Cutting Oil Cans	40 each
Empty Propane Gas Cylinders*	10 each
Acetone*	54 L (14.3 gal)
Toluene*	4 L (1.0 gal)
Degreaser Solvent SS25*	4.8 L (1.3 gal)
Petroleum Ether*	20 L (5.3 gal)
Miscellaneous Scrap Metal	4,183 kg (9,221 lbs)
Motor Oils (for I. C. engines)	3,387 L (895 gal)
Oil Filters	250 each
Air Filters (vehicles)	50 each
Air Filters (building ventilation)	45,359 kg (100,000 lbs)
Hydrocarbon Sludge*	20 kg (44 lbs)
Methylene Chloride*	2,415 L (638 gal)

* Hazardous waste as defined in 40 CFR 261 (in part or whole) (CFR, 2008i)

Table 1.1-5 Annual Hazardous Construction Wastes
(Page 1 of 1)

Item Description	Quantity
Paints, Thinners, Organics	11,360 L (3,000 gal)
Petroleum Products – Oils, Lubricants	11,360 L (3,000 gal)
Sulfuric Acid (Batteries)	379 L (100 gal)
Adhesives, Resins, Sealers, Caulking	910 kg (2,000 lbs)
Lead (Batteries)	91 kg (200 lbs)
Pesticide	379 L (100 gal)

Table 1.2-1 Type, Quantity and Form of Licensed Material
(Page 1 of 1)

Source and/or Special Nuclear Material	Physical and Chemical Form	Maximum Amount to be Possessed at Any One Time
Uranium (natural and depleted) and daughter products	Physical: Solid, Liquid and Gas Chemical: UF_6, UF_4, UO_2F_2, oxides and other compounds	225,000,000 kg
Uranium enriched in isotope ^{235}U up to 5% by weight and uranium daughter products	Physical: Solid, Liquid, and Gas Chemical: UF_6, UF_4, UO_2F_2, oxides and other compounds	1,750,000 kg
^{99}Tc, transuranic isotopes and other contamination	Any	Amount that exists as contamination as a consequence of the historical feed of recycled uranium at other facilities(1)

(1) To minimize potential sources of contamination of UF_6, such as ^{99}Tc, AES will require UF_6 suppliers to provide Commercial Natural UF_6 in accordance with ASTM C787-03, "Standard Specification for Uranium Hexafluoride for Enrichment." In addition, cylinder suppliers will be required to preclude use of cylinders that, in the past, have contained reprocessed UF_6, unless they have been decontaminated. Periodic audits of suppliers will be performed to provide assurance that these requirements are satisfied.

FIGURES

Figure 1.1-3, Site Plan with Property and Controlled Area Boundary, contains Security-Related Information Withheld from Disclosure under 10 CFR 2.390

Figure 1.1-4, Facility Layout,
contains Security-Related Information
Withheld from Disclosure under 10 CFR 2.390

Figure 1.1-5, Separations Building Module/UF_6 Handling Area Basement, contains Security-Related Information Withheld from Disclosure under 10 CFR 2.390

Figure 1.1-6, Separations Building Module/UF_6 Handling Area First Floor, contains Security-Related Information Withheld from Disclosure under 10 CFR 2.390

Figure 1.1-7, Separations Building Module/UF_6 Handling Area Second Floor, contains Security-Related Information Withheld from Disclosure under 10 CFR 2.390

Figure 1.1-7A, Separations Building Module/UF_6 Handling Area Roof, contains Security-Related Information Withheld from Disclosure under 10 CFR 2.390

Figure 1.1-8, Technical Support/Operations Support Building First Floor, contains Security-Related Information Withheld from Disclosure under 10 CFR 2.390

Figure 1.1-9, Technical Support/Operations Support Building Second Floor, contains Security-Related Information Withheld from Disclosure under 10 CFR 2.390

Figure 1.1-10, Technical Support/Operations Support Building Third Floor, contains Security-Related Information Withheld from Disclosure under 10 CFR 2.390

Figure 1.1-11, Centrifuge Assembly Building First Floor, contains Security-Related Information Withheld from Disclosure under 10 CFR 2.390

Figure 1.1-12, Centrifuge Assembly Building Second Floor, contains Security-Related Information Withheld from Disclosure under 10 CFR 2.390

Figure 1.1-13, Cylinder Receipt and Shipping Building Floor Plan, contains Security-Related Information Withheld from Disclosure under 10 CFR 2.390

Figure 1.1-14, Blending, Sampling and Preparation Building Floor Plan, contains Security-Related Information Withheld from Disclosure under 10 CFR 2.390

Figure 1.1-15, Mechanical Services Building Floor Plan, contains Security-Related Information Withheld from Disclosure under 10 CFR 2.390

Figure 1.1-16, Electrical Services Building Floor Plan, contains Security-Related Information Withheld from Disclosure under 10 CFR 2.390

Figure 1.1-17, Electrical Services Building for Centrifuge Assembly Building Floor Plan, contains Security-Related Information Withheld from Disclosure under 10 CFR 2.390

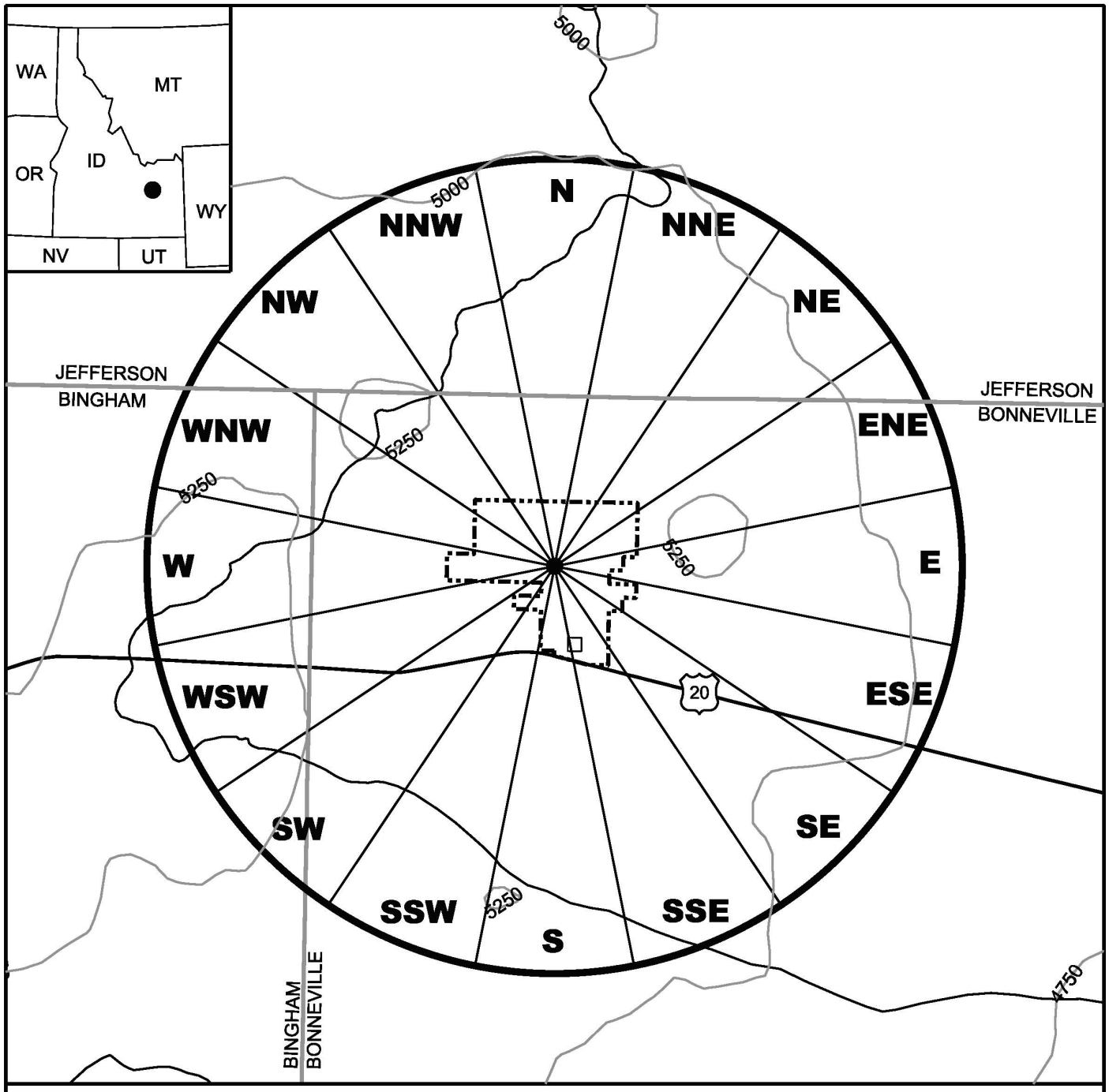

LEGEND:

5250 — APPROXIMATE EXISTING GROUND SURFACE CONTOUR AND ELEVATION, ft

PROPOSED SITE BOUNDARY

5 mi (8 km) RADIUS

SCALE
0 4000 8000 m

SCALE
0 2 4 miles

N

Figure 1.3-1 **Rev. 2**

Radial Sectors 5 mi (8 km) Radius

EAGLE ROCK ENRICHMENT FACILITY SAFETY ANALYSIS REPORT

TABLE OF CONTENTS

Page

2.0 ORGANIZATION AND ADMINISTRATION 2.0-1

2.1 ORGANIZATIONAL STRUCTURE 2.1-1

2.1.1 Corporate Functions, Responsibilities, and Authorities 2.1-1

2.1.2 Engineering, Procurement and Construction Organization 2.1-1

2.1.3 Operating Organization 2.1-2

2.1.4 Transition from Engineering, Procurement and Construction to Operations 2.1-2

2.2 KEY MANAGEMENT POSITIONS 2.2-1

2.2.1 Operating Organization 2.2-1

2.2.2 Shift Crew Composition 2.2-7

2.2.3 Safety Review Committee 2.2-7

2.2.4 Personnel Qualification Requirements 2.2-8

2.3 ADMINISTRATION 2.3-1

2.3.1 Configuration Management 2.3-1

2.3.2 Maintenance 2.3-1

2.3.3 Training and Qualifications 2.3-2

2.3.4 Procedures 2.3-2

2.3.5 Audits and Assessments 2.3-3

2.3.6 Incident Investigations 2.3-4

2.3.7 Employee Concerns 2.3-5

2.3.8 Records Management 2.3-5

2.3.9 Written Agreements with Offsite Emergency Resources 2.3-5

2.4 REFERENCES 2.4-1

LIST OF TABLES

None

LIST OF FIGURES

None

2.0 ORGANIZATION AND ADMINISTRATION

This chapter describes the management system and administrative procedures for the effective implementation of Health, Safety, and Environmental functions at the Eagle Rock Enrichment Facility (EREF). The chapter presents the organizations responsible for managing the design, construction, operation, and decommissioning of the facility. The key management and supervisory positions and functions are described including the personnel qualifications for each key position at the facility.

Areva Enrichment Services (AES), LLC, a wholly owned subsidiary of Areva NC, has been formed to provide uranium enrichment services for nuclear power plants and to design, construct and operate EREF. The AES policy is to maintain a safe work place for its employees and to assure operational compliance within the terms and conditions of the license and applicable regulations. The AES President has overall responsibility for safety and compliance to this policy. In particular, AES employs the principle of keeping radiation and chemical exposures to employees and the general public as low as reasonably achievable (ALARA).

The facility organization, technical qualifications, procedures, and management controls in this license application are similar to those submitted for Nuclear Regulatory Commission (NRC) review in the LES license application for the National Enrichment Facility (NEF) (LES, 2005). The staff reviewed the NEF plans and commitments and concluded in the Safety Evaluation Report (SER) (NRC, 2005) that they provided reasonable assurance that an acceptable organization, administrative policies, and sufficient competent resources were established or committed, to satisfy the applicant's commitments for the design, construction, and operation of the facility per 10 CFR 30.33, 10 CFR 40.32, 10 CFR 70.22, 10 CFR 70.23, and 10 CFR 70.62(d). (NRC, 2005). The differences between the EREF and NEF organizations reflect AREVA's experience in operating fuel cycle facilities. Although some titles and scope of responsibility have been changed, the functions to be performed remain the same. The key differences in the EREF and NEF organization as described in the license application reviewed by the NRC in the referenced SER are as follows:

- Organization charts are provided in the Quality Assurance Program Description (QAPD) for the engineering, procurement and construction (EPC) phase and for the operations phase. During engineering, procurement and construction, the scope and size of the staff reporting to the Project Director will be consistent with his overall responsibility for the engineering, construction and startup of the facility. Engineering and construction personnel will be integrated into the Operations organization to provide technical support during initial startup of the facility and transition into the operational phase. As the facility nears completion, systems will undergo acceptance testing as required by procedure, followed by turnover from the construction organization to the operations organization. Once operational, the Project Manager will be responsible for the engineering, procurement, construction and startup of any facility modifications and expansion.
- The Quality Assurance Manager and the Safety Review Committee report directly to the AES President rather than the Plant Manager.
- The position of Radiation Protection/Chemistry Manager reporting to the Environmental, Health, Safety and Licensing Manager is established at the EREF with the overall responsibility for the implementation of EREF programs designed to ensure the protection of workers and the public from radiological and non-radiological chemical exposures.

The information provided in this chapter, the corresponding regulatory requirement, and the section of NUREG-1520 (NRC, 2002), Chapter 2 in which the NRC acceptance criteria are presented is summarized below.

Information Category and Requirement	10 CFR 70 Citation (CFR, 2008a)	NUREG-1520 Chapter 2 Reference
Section 2.1 Organizational Structure		
Functional description of specific organization groups responsible for managing the design, construction, and operation of the facility	70.22(a)(6)	2.4.3(1) & 2.4.3(7)
Management controls and communications among organizational units	70.22(a)(8)	2.4.3(2)
Startup and transition to operations	70.22(a)(6)	2.4.3(4)
Section 2.2 Key Management Positions		
Qualifications, responsibilities, and authorities for key management personnel	70.22(a)(6)	2.4.3(3) & 2.4.3(4)
Section 2.3 Administration		
Effective implementation of HS&E functions using written procedures	70.22(a)(8)	2.4.3(5)
Reporting of unsafe conditions or activities	70.62(a)	2.4.3(6)
Commitment to establish formal management measures to ensure availability of IROFS	70.62(d)	2.4.3(8)
Written agreements with offsite emergency resources	70.22(i)	2.4.3(9)

2.1 ORGANIZATIONAL STRUCTURE

The AES organizational structure is described in the following sections. The organizational structure indicates the lines of communication and management control of activities associated with the engineering, procurement, construction, operation, and decommissioning of the facility.

2.1.1 Corporate Functions, Responsibilities, and Authorities

AREVA Enrichment Services (AES), LLC is a Delaware limited liability corporation. It has been formed solely to provide uranium enrichment services for commercial nuclear power plants. AES is a wholly owned subsidiary of AREVA NC Inc. AES is further described in Chapter 1, Section 1.2.

AES is responsible for the design, quality assurance, construction, operation, and decommissioning of the enrichment facility. The AES President has overall responsibility for these functions of the enrichment facility. Reporting to the President during the engineering, procurement and construction phase are the Project Director, Plant Operations Manager, and the Quality Assurance (QA) Manager as shown in Figure 1-2 of the Quality Assurance Program Description (QAPD). Reporting to the President during the operating phase are the Plant Manager, the QA Manager, and the Safety Review Committee. Figure 1-1 of the QAPD, Eagle Rock Enrichment Facility Organizational Chart, shows the authority and lines of communication for the operating phase.

2.1.2 Engineering, Procurement and Construction Organization

AES has contracted Enrichment Technology Company Limited (ETC) to design the core process technology while an architect/engineering firm will be contracted to further specify, design, and build the supporting structures and systems of the facility. AREVA NP conducted the site characterization and performed the Integrated Safety Analysis in support of the license application.

During the construction phase, preparation of construction documents and construction itself are contracted to qualified contractors. The Project Director is responsible for managing the engineering, construction, and procurement activities. The Control & Planning Manager may assist the Project Director in planning and implementation of the EPC activities. Contractor QA Programs will be reviewed by AES QA and must be approved before work can start. The Plant Operations Manager is responsible for the initial startup of the facility.

ETC will design, manufacture, and deliver to the site the centrifuges necessary for facility operation. In addition, ETC is supplying technical assistance and consultation for the facility. ETC has extensive experience in the gas centrifuge uranium enrichment process since it has supplied gas centrifuge technology to both URENCO and AREVA for enrichment plants in Europe and the United States. ETC is also conducting technical reviews of the design activities of the supporting structures and systems as appropriate to ensure that they are in accordance with ETC core process design requirements.

For procurement involving the use of vendors located outside the U.S., AES selects vendors only after a determination that their quality assurance programs meet the AES requirements. Any components supplied to AES are designed to meet applicable domestic industry code requirements or their equivalents as stated by the equipment specifications.

The Project Director is responsible for managing the work and contracts with ETC. Also reporting to the Project Director are the individuals responsible for the areas of procurement, construction, engineering and design, licensing, safety systems, and planning. The lines of communication of key management positions within the engineering, procurement and construction organization are shown in Figure 1-2 of the QAPD.

Position descriptions of key management personnel in the engineering, procurement and construction organization will be accessible to all affected personnel and the NRC.

2.1.3 Operating Organization

In addition to design and construction, preoperational testing and initial start-up, AES has direct responsibility for operation and maintenance of the facility.

The AES president has overall responsibility for the operation of the enrichment facility. He is also responsible for the QA Program. In the discharge of these responsibilities, he directs the activities of the following groups:

- Plant Management
- Quality Assurance
- Safety Review Committee
- Human Resources

The Plant Manager reports to the AES President and is responsible for the operation and maintenance of the EREF. In the discharge of these responsibilities, he directs the activities of the following groups:

- Operations
- Environmental, Health, Safety and Licensing
- Uranium Management
- Project Management (including Engineering, Procurement, Construction, Startup and the Technology Supplier)

The responsibilities, authorities, and lines of communication of key management positions within the operating organization are discussed in Section 2.2, Key Management Positions.

The QA Manager has the authority and responsibility to contact directly the AES President with any Quality Assurance concerns during operation.

Position descriptions for key management personnel in the operating organization will be accessible to all affected personnel and to the NRC.

2.1.4 Transition from Engineering, Procurement and Construction to Operations

AES is responsible for the design, quality assurance, construction, testing, initial startup, operation, and decommissioning of the facility.

Towards the end of construction, the focus of the organization will shift from design and construction to initial startup and operation of the facility. As the facility nears completion, AES will staff the AES EREF operating organization to ensure a smooth transition from construction

to operational activities. ETC will have personnel integrated into the AES organization to provide technical support during startup of the facility and transition into the operations phase.

As the construction of systems is completed, the systems will undergo acceptance testing as required by procedure, followed by turnover from the construction organization to the operations organization by means of a detailed transition plan. The turnover will include the physical systems and corresponding design information and records. Following turnover, the operating organization will be responsible for system maintenance and configuration management. The design basis for the facility is maintained during the transition from construction to operations through the configuration management system described in Chapter 11, Management Measures.

2.2 KEY MANAGEMENT POSITIONS

This section describes the functional positions responsible for managing the operation of the facility. The facility is staffed at sufficient levels prior to operation to allow for training, procedure development, and other pre-operational activities.

The responsibilities, authorities, and lines of communication for each key management position are provided in this section. Responsible managers have the authority to delegate tasks to other individuals; however, the responsible manager retains the ultimate responsibility and accountability for implementing the applicable requirements. Management responsibilities, supervisory responsibilities, and the criticality safety engineering staff responsibilities related to nuclear criticality safety are in accordance with ANSI/ANS-8.19-1996, Administrative Practices for Nuclear Criticality Safety (ANSI, 1996).

The AES Corporate Organization and lines of communication are shown in Figure 1-1 of the QAPD.

2.2.1 Operating Organization

The functions and responsibilities of key facility management are described in the following paragraphs. Additional detailed responsibilities related to nuclear criticality safety for key management positions and remaining supervisory and criticality safety staffs are in accordance with ANSI/ANS-8.19-1996 (ANSI, 1996).

A. AES President

The AES president has overall responsibility for the design, construction, startup, and operation of the EREF. He is also responsible for the QA Program and for determining the status, adequacy, and effectiveness of its implementation.

B. Plant Manager

The Plant Manager shall be appointed by, and report to, the AES President. The Plant Manager has direct responsibility for operation of the facility in a safe, reliable, and efficient manner. The Plant Manager is responsible for the protection of the facility staff and the general public from radiation and chemical exposure and/or any other consequences of an accident at the facility and also bears the responsibility for compliance with the facility license (as illustrated by the dashed line on Figure 1-1 of the QAPD). The Plant Manager or designee(s) have the authority to approve and issue procedures.

C. Quality Assurance Manager

The Quality Assurance Manager is appointed by and reports to the President and has overall responsibility for development, management, implementation, and independent oversight of the AES QA Program. The facility line managers and their staff who are responsible for performing quality-affecting work are responsible for ensuring implementation of and compliance with the QA Program. The QA Manager position is independent from other management positions at the facility to ensure the QA Manager has direct access to the AES President for matters affecting quality.

D. Environmental, Health, Safety and Licensing Manager

The Environmental, Health, Safety and Licensing (EHS&L) Manager reports to the Plant Manager and has the overall responsibility for the development and implementation of programs addressing worker health and safety; environmental protection; and licensing and permitting. The EHS&L Manager is also responsible for maintaining compliance with safeguards; appropriate rules, regulations, and codes; and implementation and control of the Fundamental Nuclear Material Control Plan (FNMCP), the Physical Security Plan (PSP), and the Standard Practices Procedure Plan for the Protection of Classified Matter (SPPP). This includes EHS&L activities associated with nuclear criticality safety, radiation protection, chemical safety, environmental protection, emergency preparedness, industrial safety, and development and implementation of security programs for nuclear material control and accountability, physical protection of the facility, and protection of classified matter. The EHS&L Manager works with the other facility managers to ensure consistent interpretations of EHS&L requirements, performs independent reviews, and supports facility and operations change control reviews.

This position is independent from other operations management positions at the facility to ensure objective EHS&L audit, review, and control activities. The EHS&L Manager has the authority to order the shut down of operations if they appear to be unsafe or non-compliant with applicable regulatory requirements and must consult with the Plant Manager with respect to restart of shutdown operations after the deficiency, or unsatisfactory condition, has been resolved.

E. Project Manager

The Project Manager reports to the Plant Manager and has overall responsibility for managing the engineering, procurement, construction, and startup of facility modifications and expansion. This includes managing the work and contracts with the Technology Supplier (i.e., ETC).

F. Human Resources Manager

The Human Resource Manager reports to the AES President and has the responsibility for community relations, ensuring adequate staffing, and providing administrative support services to the facility including document control.

G. Operations Manager

The Operations Manager reports to the Plant Manager and has the responsibility of directing the day-to-day operation of the facility. Inherent in this responsibility is the assurance that the operations are conducted safely and in compliance with license conditions. This includes such activities as ensuring the correct and safe operation of UF_6 processes, proper handling of UF_6, and the identification and mitigation of any off normal operating conditions. The Operations Manager is also responsible for the plant maintenance function, which includes activities to assure that Items Relied on for Safety (IROFS) are reliable and available when needed. In the event of the absence of the Plant Manager, the Operations Manager may assume the responsibilities and authorities of the Plant Manager.

H. Uranium Management Manager

The Uranium Management Manager reports to the Plant Manager and has the responsibility for UF_6 cylinder management (including compliance with transportation requirements) and directing the scheduling of enrichment operations to ensure smooth production. This includes activities such as ensuring proper feed material and maintenance equipment are available for the facility. In the event of the absence of the Plant Manager, the Uranium Management Manager may assume the responsibilities and authorities of the Plant Manager.

I. Training Manager

The Training Manager reports to the Plant Manager and has the responsibility for the development, implementation, and administration of the plant training programs, including maintenance of the plant training database. The training programs provided and/or coordinated by the Training Manager address qualifications of workers to perform work as well as required safety training.

J. Nuclear Criticality Safety Manager

The Nuclear Criticality Safety Manager reports to the EHS&L Manager. The Nuclear Criticality Safety Manager is responsible for the development and implementation of the nuclear criticality safety program. Key responsibilities include the performance of nuclear criticality safety analyses and evaluations of applicable operations involving special nuclear material and changes to those operations; establishing limits and controls based on those analyses and evaluations; assuring the proper incorporation of limits and controls into applicable procedures and instructions; and monitoring plant compliance with nuclear criticality safety requirements.

K. Radiation Protection/Chemistry Manager

The Radiation Protection/Chemistry Manager reports to the EHS&L Manager and has the responsibility for developing and implementing programs to limit personnel radiological exposures and environmental impacts associated with facility operations, including the As Low as Reasonably Achievable (ALARA) program. These duties include the training of personnel in use of equipment, control of radiation exposure of personnel, continuous determination of the radiological status of the facility, and conducting the radiological environmental monitoring program.

During emergency conditions the Radiation Protection/Chemistry Manager's duties may also include:

- Providing Emergency Operations Center personnel information and recommendations concerning chemical and radiation levels at the facility
- Gathering and compiling onsite and offsite radiological and chemical monitoring data
- Making recommendations concerning actions at the facility and offsite deemed necessary for limiting exposures to facility personnel and members of the general public
- Taking prime responsibility for decontamination activities.

In matters involving radiological protection, the Radiation Protection/Chemistry Manager has direct access to the Plant Manager.

The Radiation Protection/Chemistry Manager is also responsible for the implementation of chemistry analysis programs and procedures for the facility. This includes effluent sample collection, chemical analysis of effluents, comparison of effluent analysis results to limits, and reporting of chemical analysis of effluents to appropriate regulatory agencies.

L. Safety, Security and Emergency Preparedness Manager

The Safety, Security, and Emergency Preparedness Manager reports to the EHS&L Manager. The Safety, Security, and Emergency Preparedness Manager is responsible for implementation and maintenance of the integrated safety analysis, industrial hygiene and safety, chemical safety, fire protection, security, and emergency preparedness including the responsibility for ensuring the facility remains prepared to react and respond to any emergency situation that may arise. This includes emergency preparedness training of facility personnel, facility support personnel, the training of, and coordination with, offsite emergency response organizations (EROs), and conducting periodic drills to ensure facility personnel and offsite response organization personnel training is maintained up to date.

The Safety, Security and Emergency Preparedness Manager is also responsible for the protection of classified matter at the facility and obtaining security clearances for facility personnel and support personnel. In matters involving physical protection of the facility or classified matter, the Safety, Security and Emergency Preparedness Manager has direct access to the Plant Manager.

M. Licensing and Compliance Manager

The Licensing and Compliance Manager reports to the EHS&L Manager. The Licensing and Compliance Manager is responsible for regulatory oversight functions, regulatory and environmental compliance, facility change process, and commitment management. The Licensing and Compliance Manager is also responsible for ensuring abnormal events are reported to the NRC in accordance with NRC regulations.

N. Safeguards Manager

The Safeguards Manager reports to the EHS&L Manager and has the responsibility for ensuring the proper implementation of the FNMCP. This position is separate from and independent of other departments to ensure a definite division between the safeguards group and the other departments. In matters involving safeguards, the Safeguards Manager has direct access to the Plant Manager.

O. Measurement Control Program Manager

The Measurement Control Program Manager reports to the Safeguards Manager and has the responsibility for the EREF Measurement Control Program. The EREF Measurement Control Program is provided to ensure adequate calibration frequencies, sufficient control of biases, and sufficient measurement precisions for nuclear material control and accounting.

P. Industrial Safety Manager

The Industrial Safety Manager reports to the EHS&L Manager and has the responsibility for implementation of industrial safety programs and procedures. This shall include programs and procedures for training individuals in safety and maintaining the performance of the facility fire protection systems.

Q. Engineering Manager

The Engineering Manager reports to the Project Manager. The Engineering Manager is responsible for site characterization; facility design and the design control process; configuration management; engineering; and acceptance test coordination, including test control of facility modifications and expansion. The Engineering Manager is also responsible for records management and document control, and approving disposition of nonconforming items when dispositioned as “repair” or “use-as-is” during operations.

R. Procurement Manager

The Procurement Manager reports to the Project Manager. The Procurement Manager is responsible for procurement; providing procurement material control services (including supplier qualification coordination, purchasing, contracting, receiving and control of nonconforming items); and material control (including handling, storage and shipping). The Procurement Manager is also responsible for supply strategy and development of qualified long-lead-time and complex-system suppliers.

S. Construction Manager

The Construction Manager reports to the Project Manager. The Construction Manager is responsible for managing the construction of facility modifications and expansion to the Eagle Rock Enrichment Facility. This responsibility includes managing the activities of qualified contractors who are tasked with the preparation of construction documents and the construction of facility modifications and expansion.

T. Startup Manager

The Startup Manager reports to the Project Manager. The Startup Manager is responsible for the overall preoperational and startup test program of facility modifications and expansion. This individual is responsible for the development of preoperational and startup test procedures, providing technical advice to personnel conducting the tests, briefing personnel responsible for operation of the plant during the tests, ensuring that the tests are performed in accordance with the applicable procedures, and generating test reports.

U. Information Technology (IT) Manager

The IT Manager reports to the Project Manager and is responsible for maintaining all computer software programs related to the nuclear material accounting at EREF. This individual is also responsible for EREF computer database for generation of nuclear material control charts.

V. Cylinder Management Manager

The Cylinder Management Manager reports to the Uranium Management Manager and has the responsibility for ensuring that cylinders of uranium hexafluoride are received and routed correctly at the facility, and is responsible for all transportation licensing.

W. Production Scheduling Manager

The Production Scheduling Manager reports to the Uranium Management Manager and has the responsibility for developing and maintaining production schedules for enrichment services.

X. Warehouse and Materials Manager

The Warehouse and Materials Manager reports to the Uranium Management Manager and has the responsibility for ensuring spare parts and other materials needed for operation of the facility are ordered, received, inspected, and stored properly.

Y. Production Managers

The Production Managers report to the Operations Manager. The Production Managers are responsible for enrichment operations, feed and withdrawal operations, utilities, shift operations, packaging, and transportation.

Z. Maintenance Manager

The Maintenance Manager reports to the Operations Manager and has the responsibility of directing and scheduling maintenance activities to ensure proper operation of the facility, including preparation and implementation of maintenance procedures. This includes activities such as repair and preventive maintenance of facility equipment. The Maintenance Manager is also responsible for safe and reliable performance of preventive and corrective maintenance and support services on buildings/facilities and equipment (including IROFS), and for integrated planning and scheduling. In addition, the Maintenance Manager coordinates and maintains testing programs for the facility. This includes testing of systems and components to ensure the systems and components are functioning as specified in design documents.

AA. Production Supervisors

The Production Supervisors report to their respective Production Managers. The Production Supervisors are directly responsible for control of materials, personnel, equipment, and activities in specific areas. These responsibilities include assuring that formal approved procedures are available and adhered to by operators and other applicable personnel.

BB. Quality Assurance Inspectors

The Quality Assurance Inspectors report to the Quality Assurance Manager (via a designated supervisory position, if applicable) and have the responsibility for performing inspections related to the implementation of the AES QA Program.

CC. Quality Assurance Auditors

The Quality Assurance Auditors report to the Quality Assurance Manager (via a designated supervisory position, if applicable) and have the responsibility for performing audits related to the implementation of the AES QA Program.

DD. Quality Assurance Technical Support

The Quality Assurance Technical Support personnel report to the Quality Assurance Manager (via a designated supervisory position, if applicable) and have the responsibility for providing technical support related to the implementation of the AES QA Program.

EE. Criticality Safety Engineer

Criticality Safety Engineers report to the Nuclear Criticality Safety Manager (via a designated supervisory position, if applicable) and are responsible for the preparation and/or review of nuclear criticality safety evaluations and analyses, and conducting and reporting periodic nuclear criticality safety assessments. Nuclear criticality safety evaluations and analyses require independent reviews by a Criticality Safety Engineer.

FF. Chemical Safety Engineer

The Chemical Safety Engineer reports to the Radiation Protection/Chemistry Manager (via a designated supervisory position, if applicable) and is responsible for the preparation and/or review of chemical safety programs and procedures for the facility.

GG. Administration Manager

The Administration Manager reports to the Human Resources Manager and has the responsibility for ensuring support functions such as accounting, word processing, and general office management are provided for the facility.

HH. Communications, Community Affairs Manager

The Communications, Community Affairs Manager reports to the Human Resources Manager and has the responsibility for providing information about the facility and AES to the public and media. During an abnormal event at the facility, the Communications, Community Affairs Manager ensures that the public and media receive accurate and up-to-date information.

II. Document Control Manager

The Document Control Manager reports to the Human Resources Manager and has the responsibility for adequately controlling documents at the facility.

2.2.2 Shift Crew Composition

The minimum operating shift crew consists of a Production Supervisor (or Deputy Production Supervisor in the absence of the Production Supervisor), one Control Room operator, one Radiation Protection technician, one operator for each Cascade Hall and associated UF_6 handling systems, and security personnel. When only one Cascade Hall is in operation, a minimum of two operators is required.

At least one criticality safety engineer will be available, with appropriate ability to be contacted by the Production Supervisor, to respond to any routine request or emergency condition. This availability may be offsite if adequate communication ability is provided to allow response as needed.

2.2.3 Safety Review Committee

The facility maintains a Safety Review Committee (SRC) to assist with the safe operation of the facility. The SRC shall report to the AES President and shall provide technical and administrative review and audit of operations that could impact plant worker, public safety, and environmental impacts. The scope of activities reviewed and audited by the SRC shall, as a minimum, include the following:

- Radiation protection
- Nuclear criticality safety
- Hazardous chemical safety
- Industrial safety including fire protection
- Environmental protection
- ALARA policy implementation
- Changes in facility design or operations.

The SRC shall conduct at least one facility audit per year for the above areas.

The Safety Review Committee shall be composed of at least five members, including the Chairman. Members of the SRC may be from the AES corporate or technical staff. The five members shall include experts on operations and all safety disciplines (criticality, radiological, chemical, and industrial). The Chairman, members and alternate members of the Safety Review Committee shall be formally appointed by the AES President, shall have an academic degree in an engineering or physical science field; and, in addition, shall have a minimum of five years of technical experience, of which a minimum of three years shall relate directly to one or more of the safety disciplines (criticality, radiological, chemical, industrial).

The Safety Review Committee shall meet at least once per calendar quarter.

Review meetings shall be held within 30 days of any incident that is reportable to the NRC. These meetings may be combined with regular meetings. Following a reportable incident, the SRC shall review the incident's causes, the responses, and both specific and generic corrective actions to ensure resolution of the problem is implemented.

A written report of each SRC meeting and audit shall be forwarded to the AES President, the Plant Manager, and other appropriate Managers within 30 days and be retained in accordance with the records management system.

2.2.4 Personnel Qualification Requirements

The minimum qualification requirements for the facility functions that are directly responsible for its safe operation shall be as outlined below.

The nuclear experience of each individual shall be determined to be acceptable by the AES President. "Responsible nuclear experience" for these positions shall include (a) responsibility for and contributions towards support of facility(ies) in the nuclear fuel cycle (e.g., design, construction, operation, and/or decommissioning), and (b) experience with chemical materials and/or processes. The AES President may approve different experience requirements for key positions. Approval of different requirements shall be done in writing and only on a case-by-case basis.

The assignment of individuals to the Manager positions reporting directly to the AES President, and to positions on the SRC shall be approved by the AES President. Assignments to all other staff positions shall be made within the normal administrative practices of the facility.

The actual qualifications of the individuals assigned to the key facility positions described in Section 2.2.1, Operating Organization will be maintained in the employee personnel files or other appropriate file at the facility. Development and maintenance of qualification records and training programs are the responsibility of the Human Resources Manager.

A. Plant Manager

The AES President shall appoint the Plant Manager as the manager of the facility. This appointment reflects confidence in the individual's ability as an effective programs and business manager. The Plant Manager shall be knowledgeable of the enrichment process, enrichment process controls and ancillary processes, criticality safety control, chemical safety, industrial safety, and radiation protection program concepts as they apply to the overall safety of a nuclear facility. The Plant Manager shall have, as a minimum, a bachelor's degree (or equivalent) in an engineering or scientific field and ten years of responsible nuclear experience.

B. Quality Assurance Manager

The Quality Assurance Manager shall have, as a minimum, a bachelor's degree (or equivalent) in an engineering or scientific field and at least six years of responsible nuclear experience in the implementation of a quality assurance program. The QA Manager shall have at least four years experience in a QA organization at a nuclear facility.

C. Environmental, Health, Safety, and Licensing Manager

The Environmental, Health, Safety, and Licensing (EHS&L) Manager shall have, as a minimum, a bachelor's degree (or equivalent) in an engineering or scientific field and at least five years of responsible nuclear experience in EHS&L or related disciplines. The EHS&L Manager shall

also have at least one year of direct experience in the administration of nuclear criticality safety evaluations and analyses.

D. Project Manager

The Project Manager shall have, as a minimum, a bachelor's degree (or equivalent) in an engineering or scientific field and four years of responsible nuclear experience.

E. Human Resources Manager

The Human Resources Manager shall have as a minimum, a bachelor's degree in Personnel Management, Business Administration or related field, and three years of appropriate, responsible experience in implementing and supervising human resource responsibilities at an industrial facility.

F. Operations Manager

The Operations Manager shall have, as a minimum, a bachelor's degree (or equivalent) in an engineering or scientific field and four years of responsible nuclear experience.

G. Uranium Management Manager

The Uranium Management Manager shall have, as a minimum, a bachelor's degree (or equivalent) in an engineering or scientific field and four years of responsible nuclear experience.

H. Training Manager

The Training Manager shall have a minimum of five years of appropriate, responsible experience in implementing and supervising a training program.

I. Nuclear Criticality Safety Manager

The Nuclear Criticality Safety Manager shall have, as a minimum, a bachelor's degree (or equivalent) in an engineering or scientific field and four years of responsible nuclear experience. The Nuclear Criticality Safety Manager shall also have at least one year of direct experience in the administration of nuclear criticality safety evaluations and analyses.

J. Radiation Protection/Chemistry Manager

The Radiation Protection/Chemistry Manager shall have, as a minimum, a bachelor's degree (or equivalent) in an engineering or scientific field and four years of responsible nuclear experience.

K. Safety, Security, and Emergency Preparedness Manager

The Safety, Security and Emergency Preparedness Manager shall have as a minimum, a bachelor's degree in an engineering or scientific field, and five years of experience in the responsible management of physical security at a facility requiring security capability similar to that required for the facility. No credit for academic training may be taken toward fulfilling this experience requirement.

L. Licensing and Compliance Manager

The Licensing and Compliance Manager shall have, as a minimum, a bachelor's degree (or equivalent) in an engineering or scientific field and four years of responsible nuclear experience.

M. Safeguards Manager

The Safeguards Manager shall have as a minimum, a bachelor's degree in an engineering or scientific field, and five years of experience in the management of a safeguards program for

Special Nuclear Material, including responsibilities for material control and accounting. No credit for academic training may be taken toward fulfilling this experience requirement.

N. Measurement Control Program Manager

The Measurement Control Program Manager shall have, as a minimum, a bachelor's degree in an engineering or scientific field, and five years of experience in the management control program.

O. Industrial Safety Manager

The Industrial Safety Manager shall have, as a minimum, a bachelor's degree (or equivalent).

P. Engineering Manager

The Engineering Manager shall have, as a minimum, a bachelor's degree (or equivalent) in an engineering or scientific field and have a minimum of five years of appropriate, responsible experience in implementing and supervising a nuclear engineering program.

Q Procurement Manager

The Procurement Manager shall have, as a minimum, a bachelor's degree (or equivalent) in an engineering or business field and have a minimum of five years of responsible experience in purchasing and supply chain management.

R. Construction Manager

The Construction Manager shall have, as a minimum, a bachelor's degree (or equivalent) in an engineering or scientific field and have a minimum of five years of appropriate, responsible experience in implementing and supervising a nuclear construction program.

S. Startup Manager

The Startup Manager shall have, as a minimum, a bachelor's degree (or equivalent) in an engineering or scientific field and have a minimum of five years of responsible experience in nuclear plant operations and maintenance.

T. Information technology Manager

The IT Manager shall have, as a minimum, a bachelor's degree (or equivalent) in computer science, and five years of experience in the computer related field.

U. Cylinder Management Manager

The Cylinder Management Manager shall have a minimum of three years of appropriate, responsible experience in implementing and supervising a continuous production scheduling program.

V. Production Scheduling Manager

The Production Scheduling Manager shall have a minimum of three years of appropriate, responsible experience in implementing and supervising a continuous production scheduling program.

W. Warehouse and Materials Manager

The Warehouse and Materials Manager shall have a minimum of three years of appropriate, responsible experience in implementing and supervising a purchasing and inventory program.

X. Production Managers

Production Managers shall have a minimum of five years of appropriate, responsible experience in implementing and supervising a nuclear operations program.

Y. Maintenance Manager

The Maintenance Manager shall have, as a minimum, a bachelor's degree (or equivalent) in an engineering or scientific field and four years of responsible nuclear experience.

Z. Production Supervisors

Production Supervisors shall have a minimum of three years of appropriate, responsible experience in implementing and supervising a nuclear operations program.

AA. Criticality Safety Engineer

Criticality Safety Engineers shall have a minimum of two years experience in the implementation of a criticality safety program. These individuals shall hold a Bachelor of Science or Bachelor of Arts degree in an engineering or scientific field and have successfully completed a training program, applicable to the scope of operations, in the physics of criticality and in associated safety practices.

Should a change to the facility require a nuclear criticality safety evaluation or analysis, an individual who, as a minimum, possesses the equivalent qualifications of the Criticality Safety Engineer shall perform the evaluation or analysis. In addition, this individual shall have at least two years of experience performing criticality safety analyses and implementing criticality safety programs. An independent review of the evaluation or analysis shall be performed by a qualified Criticality Safety Engineer.

BB. Chemical Safety Engineer

The Chemical Safety Engineer shall have a minimum of two years experience in the preparation and/or review of chemical safety programs and procedures. This individual shall hold a bachelor's degree (or equivalent) in an engineering or scientific field and have successfully completed a training program, applicable to the scope of operations, in chemistry and in associated safety practices.

CC. Administration Manager

The Administration Manager shall have a minimum of three years of appropriate, responsible experience in implementing and supervising administrative responsibilities at an industrial facility.

DD. Communications, Community Affairs Manager

The Communications, Community Affairs Manager shall have as a minimum, a bachelor's degree in Public Relations, Political Science or Business Administration and three years of appropriate, responsible experience in implementing and supervising a community relations program.

EE. Document Control Manager

The Document Control Manager shall have a minimum of three years of appropriate, responsible experience in implementing and supervising a document control program.

2.3 ADMINISTRATION

This section summarizes how the activities that are essential for implementation of the management measures and other EHS&L functions are documented in formally approved, written procedures, prepared in compliance with a formal document control program. The mechanism for reporting potentially unsafe conditions or activities to the EHS&L organization and facility management is also summarized. Details of the management measures are provided in Chapter 11, Management Measures.

2.3.1 Configuration Management

Configuration management is provided for Items Relied on for Safety (IROFS) throughout facility design, construction, testing, and operation. Configuration management provides the means to establish and maintain a technical baseline for the facility based on clearly defined requirements. During design and construction, the Vice President Engineering and Licensing has responsibility for configuration management through the design control process. Selected documentation is controlled under the configuration management system in accordance with appropriate QA program required procedures associated with design control, document control, and records management. Design changes to IROFS undergo formal review, including interdisciplinary reviews as appropriate, in accordance with these procedures.

Configuration management provides the means to establish and maintain the essential features of the design basis of IROFS. As the project progresses from design and construction to operation, configuration management is maintained by the facility engineering organization as the overall focus of activities changes.

Additional details on Configuration Management are provided in Chapter 11, Management Measures.

2.3.2 Maintenance

The maintenance program will be implemented for the operations phase of the facility. Preventive maintenance activities, surveillance, and performance trending provide reasonable and continuing assurance that IROFS will be available and reliable to perform their safety functions.

The purpose of planned and scheduled maintenance for IROFS is to ensure that the equipment and controls are kept in a condition of readiness to perform the planned and designed functions when required. Appropriate plant management is responsible for ensuring the operational readiness of IROFS under this control. For this reason, the maintenance function is administratively closely coupled to operations. The maintenance organization plans, schedules, tracks, and maintains records for maintenance activities.

Maintenance activities generally fall into the following categories:

- Corrective maintenance
- Preventive maintenance
- Surveillance/monitoring
- Functional testing.

These maintenance categories are discussed in detail in Chapter 11, Management Measures.

2.3.3 Training and Qualifications

Formal planned training programs shall be established for facility employees. Indoctrination training shall be provided to employees within 30 days of reporting to work, and shall address safety preparedness for all safety disciplines (criticality, radiological, chemical, and industrial); ALARA practices; and emergency procedures. In-depth training programs shall be provided to individuals depending on job requirements in the areas of radiological safety (for all personnel with access to the Restricted Area) and in criticality safety control. Nuclear criticality safety training shall satisfy the recommendations of ANSI/ANS-8.20 - 1991, Nuclear Criticality Safety Training (ANSI, 1991). Retraining of personnel previously trained shall be performed for radiological and criticality safety at least annually, and shall include updating and changes in required skills. The training program shall include methods for verifying training effectiveness, such as written tests, actual demonstration of skills, and where required by regulation, maintaining a current and valid license demonstrating qualification. Changes to training shall be implemented if indicated due to incidents potentially compromising safety, or if changes are made to facilities or processes.

The training programs and maintenance of the training program records at the facility are the responsibility of the Human Resources Manager. Accurate records are maintained on each employee's qualifications, experience, training, and retraining. The employee training file shall include records of all general employee training, technical training, and employee development training conducted at the facility. The employee training file shall also contain records of special company sponsored training conducted by others. The training records for each individual are maintained so that they are accurate and retrievable. Training records are retained in accordance with the records management system.

Additional details on the facility training program are provided in Chapter 11, Management Measures.

2.3.4 Procedures

Activities involving licensed materials will be conducted through the use of approved, written procedures. Applicable procedure and training requirements will be satisfied before use of the procedure. Procedures will be used to control activities in order to ensure the activities are carried out in a safe manner.

Generally, four types of plant procedures are used to control activities: operating procedures, administrative procedures, maintenance procedures, and emergency procedures. Operating procedures, developed for workstation and control room operators, are used to directly control process operations. Administrative procedures are written by each department as necessary to control activities that support process operations, including management measures (e.g. configuration management, training and record-keeping). Maintenance procedures address preventive and corrective maintenance, surveillance (includes calibration, inspection, and other surveillance testing), functional testing following maintenance, and requirements for pre-maintenance activity involving reviews of the work to be performed and reviews of procedures. Emergency procedures address the preplanned actions of operators and other plant personnel in the event of an emergency.

Policies and procedures will be developed to ensure that there are ties between major plant safety functions such as the ISA, management measures for items relied on for safety (IROFS), radiation safety, nuclear criticality safety, fire safety, chemical safety, environmental monitoring, and emergency planning.

Chapter 11 details the use of procedures, including development, revision, and distribution and control.

2.3.5 Audits and Assessments

The AES QA Program requires periodic audits to confirm that activities affecting quality comply with the QA Program and that the QA Program is being implemented effectively. The assessment function includes audits and other independent assessments to verify performance. These assessments provide a comprehensive independent evaluation of activities, including activities delegated to others under the AES QA Program, and procedures. Personnel who do not have direct responsibility in the area being assessed conduct these assessments.

An assessment and audit program for operational quality assurance of the enrichment facility is established, and periodically reviewed by management, to:

- verify that the configuration and operation of the facility are consistent with AES company policy, approved procedures and license provisions
- review important proposed facility modifications, tests and procedures
- verify that reportable occurrences are investigated and corrected in a manner which reduces the probability of recurrence of such events
- detect trends which may not be apparent to a day-to-day observer.

The organizational structure for conducting the operational reviews and audit program includes:

- The Safety Review Committee appointed by the AES President.
- Regular audits conducted by the Quality Assurance Department.

Each of the above shall have the authority necessary to discharge its responsibilities adequately. Implicit in this authority shall be access to facility records and personnel as required in order to perform reviews and audits properly.

Additional details on audits and assessments are provided in Chapter 11, Management Measures.

2.3.5.1 Safety Review Committee

The Safety Review Committee (SRC) provides technical and administrative review of facility operations that could impact plant worker and public safety. Details on the SRC and the scope of activities reviewed by the SRC are provided in Section 2.2.3, Safety Review Committee.

2.3.5.2 Quality Assurance Department

The Quality Assurance Department conducts periodic audits of activities associated with the facility, in order to verify the facility's compliance with established procedures. Audits are conducted in accordance with the Quality Assurance Program Description and as required by Chapter 11, Management Measures.

2.3.5.3 Facility Operating Organization

The facility operating organization shall provide, as part of the normal duties of supervisory personnel, timely and continuing monitoring of operating activities to assist the Plant Manager in

keeping abreast of general facility conditions and to verify that the day-to-day operating activities are conducted safely and in accordance with applicable administrative controls.

These continuing monitoring activities are considered to be an integral part of the routine supervisory function and are important to the safety of the facility operation.

2.3.5.4 Audited Organizations

Audited organizations shall assure that deficiencies identified are corrected in a timely manner.

Audited organizations shall transmit a response to each audit report within the time period specified in the audit. For each identified deficiency, the response shall identify the corrective action taken or to be taken. For each identified deficiency, the response shall also address whether or not the deficiency is considered to be indicative of other problems (e.g., a specific audit finding may indicate a generic problem) and the corrective action taken or to be taken for any such problems determined.

Copies of audit reports and responses are maintained in accordance with the records management system.

2.3.6 Incident Investigations

Abnormal events that potentially threaten or lessen the effectiveness of health, safety, or environmental protection are identified and reported to the EHS&L Manager or designee through the Corrective Action Program (CAP) which is described in more detail in Chapter 11, Management Measures. Each event is considered in terms of its requirements for reporting in accordance with regulations and is evaluated to determine the level of investigation required. These evaluations and investigations are conducted in accordance with approved CAP procedures. The depth of the investigation depends upon the severity of the incident in terms of the levels of uranium released and/or the degree of potential for exposure of workers, the public, or the environment.

The EHS&L Manager or designee is responsible for:

- maintaining a list of agencies to be notified
- determining if a report to an agency is required
- notifying the agency when required.

The licensing function has the responsibility for continuing communications with government agencies and tracking corrective actions to completion.

The process of incident identification, investigation, root cause analysis, environmental protection analysis, recording, reporting, and follow-up shall be addressed in and performed in accordance with written procedures. Radiological, criticality, hazardous chemical, and industrial safety requirements shall be addressed. Guidance for classifying incidents shall be contained in facility procedures, including a list of threshold off-normal incidents.

The EHS&L Manager or designee shall, through implementation of the CAP, maintain a record of corrective actions to be implemented as a result of off-normal investigations. These corrective actions shall include documenting lessons learned, and implementing worker training where indicated, and shall be tracked to completion by the EHS&L Manager or designee within the CAP.

Additional details on incident investigations are provided in Chapter 11, Management Measures.

2.3.7 Employee Concerns

Employees who feel that safety or quality is being compromised have the right and responsibility to initiate the “stop work” process in accordance with the applicable project or facility procedures to ensure the work environment is placed in a safe condition.

Employees also have access to various resources to ensure their safety or quality concerns are addressed, including:

- line management or other facility management (e.g., EHS&L Manager, Plant Manager, QA Manager)
- the facility safety organization (i.e., any of the safety engineers or managers)
- NRC’s requirements under 10 CFR 19, Notices, Instructions and Reports to Workers: Inspection and Investigations (CFR, 2008b)
- AES CAP - a simple mechanism available for use by any person at the EREF site for reporting unusual events and potentially unsafe conditions or activities.

2.3.8 Records Management

Procedures are established which control the preparation and issuance of documents such as manuals, instructions, drawings, procedures, specifications, and supplier-supplied documents, including any changes thereto. Measures are established to ensure documents, including revisions, are adequately reviewed, approved, and released for use by authorized personnel.

Document control procedures require documents to be transmitted and received in a timely manner at appropriate locations including the location where the prescribed activity is to be performed. Controlled copies of these documents and their revisions are distributed to and used by the persons performing the activity.

Superseded documents are destroyed or are retained only when they have been properly labeled. Indexes of current documents are maintained and controlled.

The QA Program assigns responsibility for verifying QA record retention to the QA Manager. Applicable design specifications, procurement documents, or other documents specify the QA records to be generated by, supplied to, or held, in accordance with approved procedures. QA records are not considered valid until they are authenticated and dated by authorized personnel.

Additional details on the records management program are provided in Chapter 11, Management Measures.

2.3.9 Written Agreements with Offsite Emergency Resources

The plans for coping with emergencies at the facility are presented in detail in the Emergency Plan. The Emergency Plan includes a description of the facility emergency response organization and interfaces with off-site EROs. Written agreements between the facility and offsite EROs, including the local fire department, the local law enforcement agency, ambulance/rescue units, and medical services and facilities have been established.

Coordination with participating government agencies (State, Counties) is vital to the safety and health of plant personnel and the general public. The principal state and local

agencies/organizations having responsibilities for radiological or other hazardous material emergencies for the facility are:

- Idaho Bureau of Homeland Security
- Bonneville County Emergency Management Services

Details of the interfaces with these agencies are provided in Section 4 of the Emergency Plan.

2.4 REFERENCES

ANSI, 1991. Nuclear Criticality Safety Training, ANSI/ANS-8.20-1991, American National Standards Institute/American Nuclear Society, 1991.

ANSI, 1996. Administrative Practices for Nuclear Criticality Safety, ANSI/ANS-8.19-1996, American National Standards Institute/American Nuclear Society, 1996.

CFR, 2008a. Title 10, Code of Federal Regulations, Part 70, Domestic Licensing of Special Nuclear Material, 2008.

CFR, 2008b. Title 10, Code of Federal Regulations, Part 19, Notices, Instructions and Reports to Workers: Inspection and Investigations, 2008.

LES, 2005. National Enrichment Facility Safety Analysis Report, Revision 7, June 2005.

NRC, 2002. Standard Review Plan for the Review of a License Application for a Fuel Cycle Facility, NUREG-1520, U.S. Nuclear Regulatory Commission, March 2002.

NRC, 2005. Safety Evaluation Report for the National Enrichment Facility in Lea County, New Mexico, June 2005.

TABLE OF CONTENTS

Page

3.0 SAFETY PROGRAM 3.0-1

3.1 INTEGRATED SAFETY ANALYSIS METHODS 3.1-1

3.1.1 Hazard Identification 3.1-2

3.1.2 Process Hazard Analysis Method 3.1-5

3.1.3 Risk Matrix Development 3.1-7

3.1.4 Risk Index Evaluation Summary 3.1-9

3.2 INTEGRATED SAFETY ANALYSIS TEAM 3.2-1

3.3 COMPLIANCE ITEM COMMITMENTS 3.3-1

3.3.1 IROFS 3.3-1

3.3.2 Seismic Design 3.3-4

3.3.3 Building Requirements 3.3-6

3.3.4 Structural Design Criteria 3.3-8

3.3.5 Codes and Standards for Structural Design 3.3-10

3.3.6 Process Systems Requirements 3.3-11

3.3.7 Utility and Support Systems Requirements 3.3-14

3.4 REFERENCES 3.4-1

LIST OF TABLES

Table 3.1-1 HAZOP Guidewords
Table 3.1-2 ISA HAZOP Table Sample Format
Table 3.1-3 Consequence Severity Categories Based on 10 CFR 70.61
Table 3.1-4 Definition of Consequence Severity Category for Chemical Exposure
Table 3.1-5 Likelihood Categories Based on 10 CFR 70.61
Table 3.1-6 Risk Matrix with Risk Index Values
Table 3.1-7 Accident Sequence and Risk Index
Table 3.1-8 Determination of Likelihood Category
Table 3.1-9 Failure Frequency Index Numbers
Table 3.1-10 Failure Probability Index Numbers
Table 3.1-11 Failure Duration Index Numbers
Table 3.3-1 UF_6 Feed System Codes and Standards
Table 3.3-2 Cascade System Codes and Standards
Table 3.3-3 Product Take-Off System Codes and Standards
Table 3.3-4 Tails Take-off System Codes and Standards
Table 3.3-5 Product Blending System Codes and Standards
Table 3.3-6 Product Liquid Sampling System Codes and Standards
Table 3.3-7 Dump System Codes and Standards
Table 3.3-8 Gaseous Effluent Ventilation System Codes and Standards
Table 3.3-9 Cylinder Evacuation Systems Codes and Standards
Table 3.3-10 Codes and Standards

LIST OF FIGURES

None

3.0 SAFETY PROGRAM

The three elements of the safety program defined in 10 CFR 70.62(a) (CFR, 2008d) are addressed below. The subject matter discussed below is identical to the National Enrichment Facility (NEF) SAR (LES, 2005). The NRC staff previously concluded (NRC, 2005) that similar subject matter in the NEF SAR (LES, 2005) relative to the general guidelines of the safety program meets the requirements of 10 CFR 70.62(a)(1) through (3) to establish and maintain a safety program that includes process safety information, integrated safety analysis and management measures, and appropriate safety program records (LES, 2005). The staff also concluded that the program to establish and maintain records of IROFS failures that will be retrievable for NRC inspection is appropriate.

3.0.1 Process Safety Information

A. AES has compiled and maintains up-to-date documentation of process safety information. Written process-safety information is used in updating the ISA and in identifying and understanding the hazards associated with the processes. The compilation of written process-safety information includes information pertaining to:

1. The hazards of all materials used or produced in the process, which includes information on chemical and physical properties such as are included on Material Safety Data Sheets meeting the requirements of 29 CFR 1910.1200(g) (CFR, 2008e).

2. Technology of the process which includes block flow diagrams or simplified process flow diagrams, a brief outline of the process chemistry, safe upper and lower limits for controlled parameters (e.g., temperature, pressure, flow, and concentration), and evaluation of the health and safety consequences of process deviations.

3. Equipment used in the process including general information on topics such as the materials of construction, piping and instrumentation diagrams (P&IDs), ventilation, design codes and standards employed, material and energy balances, IROFS (e.g., interlocks, detection, or suppression systems), electrical classification, and relief system design and design basis.

The process-safety information described above is maintained up-to-date by the configuration management program described in Section 11.1, Configuration Management.

B. AES has developed procedures and criteria for changing the ISA. This includes implementation of a facility change mechanism that meets the requirements of 10 CFR 70.72 (CFR, 2008f). The development and implementation of procedures is described in Section 11.4, Procedures Development and Implementation.

C. AES uses personnel with the appropriate experience and expertise in engineering and process operations to maintain the ISA. The ISA Team for the various processes consists of individuals who are knowledgeable in the ISA method(s) and the operation, hazards, and safety design criteria of the particular process. Training and qualifications of individuals responsible for maintaining the ISA are described in Section 11.3, Training and Qualifications, Section 2.2, Key Management Positions, and Section 3.2, Integrated Safety Analysis Team.

3.0.2 Integrated Safety Analysis

A. AES has conducted an ISA for each process, such that it identifies (i) radiological hazards, (ii) chemical hazards that could increase radiological risk, (iii) facility hazards that could increase radiological risk, (iv) potential accident sequences, (v) consequences and likelihood of each accident sequence and (vi) IROFS and credited attributes of safe-by-design components, including the assumptions and conditions under which they support compliance with the performance requirements of 10 CFR 70.61 (CFR, 2008c).

A synopsis of the results of the ISA, including the information specified in 10 CFR 70.65(b) (CFR, 2008a), is provided in the Eagle Rock Enrichment Facility (EREF) Integrated Safety Analysis Summary.

B. AES has implemented programs to maintain the ISA and supporting documentation so that it is accurate and up-to-date. Changes to the ISA Summary are submitted to the NRC, in accordance with 10 CFR 70.72(d)(1) and (3) (CFR, 2008f). The ISA update process accounts for any changes made to the facility or its processes. This update will also verify that initiating event frequencies and reliability values of IROFS assumed in the ISA remain valid. Any changes required to the ISA as a result of the update process will be included in a revision to the ISA. Management policies, organizational responsibilities, revision time frame, and procedures to perform and approve revisions to the ISA are outlined in Chapter 11.0, Management Measures. Evaluation of any facility changes or changes in the process safety information that may alter the parameters of an accident sequence is by the ISA method(s) as described in the ISA Summary Document. For any revisions to the ISA, personnel having qualifications similar to those of ISA team members who conducted the original ISA are used.

C. Personnel used to update and maintain the ISA and ISA Summary are trained in the ISA method(s) and are suitably qualified. Training and Qualification of personnel used to update or maintain the ISA are described in Section 11.3, Training and Qualifications.

D. Proposed changes to the facility or its operations are evaluated by the ISA method(s) described in the ISA Summary. New or additional IROFS and appropriate management measures are designated as required. The adequacy of existing IROFS and associated management measures are promptly evaluated to determine if they are impacted by changes to the facility and/or its processes. If a proposed change results in a new type of accident sequence or increases the consequences or likelihood of a previously analyzed accident sequence within the context of 10 CFR 70.61 (CFR, 2008c), the adequacy of existing IROFS and associated management measures are promptly evaluated and the necessary changes are made, if required.

E. Unacceptable performance deficiencies associated with IROFS are addressed that are identified through updates to the ISA.

F. Written procedures are maintained on site. Section 11.4, Procedures Development and Implementation, discusses the procedures program.

G. All IROFS are maintained so that they are available and reliable when needed.

3.0.3 Management Measures

Management measures are functions applied to IROFS and any activities that may affect the function of IROFS. Management measures ensure compliance with the performance requirements assumed in the ISA documentation. The measures are applied to particular structures, systems, equipment, components, and activities of personnel, and may be graded commensurate with the reduction of the risk attributable to that IROFS. The management measures shall ensure that these structures, systems, equipment, components, and activities of personnel within the identified IROFS boundary are designed, implemented, and maintained, as necessary, to ensure they are available and reliable to perform their function when needed, to comply with the performance requirements assumed in the ISA documentation.

The following types of management measures are required by the 10 CFR 70.4 (CFR, 2008g) definitions of management measures. The description for each management measure reflects the general requirements applicable to each IROFS. Any management measure that deviates from the general requirements described in this section, which are consistent with the performance requirements assumed in the ISA documentation, are discussed in the ISA Summary.

Configuration Management

The configuration management program is required by 10 CFR 70.72 (CFR, 2008f) and establishes a system to evaluate, implement, and track each change to the site, structures, processes, systems, equipment, components, computer programs, and activities of personnel. Configuration management of IROFS and any activities that may affect the function of IROFS is applied to all items identified within the scope of the IROFS boundary. Any change to structures, systems, equipment, components, and activities of personnel within the identified IROFS boundary must be evaluated before the change is implemented. If the change requires an amendment to the License, Nuclear Regulatory Commission approval is required prior to implementation.

Maintenance

Maintenance of IROFS encompasses planned surveillance testing and preventative maintenance, as well as unplanned corrective maintenance. Implementation of approved configuration management changes to hardware is also generally performed as a planned maintenance function.

Planned surveillance testing (e.g., functional/performance testing, instrument calibrations) monitors the integrity and capability of IROFS, and any items that may affect the function of IROFS, to ensure they are available and reliable to perform their function when needed, to comply with the performance requirements assumed in the ISA documentation. All necessary periodic surveillance testing is generally performed on an annual frequency (any exceptions credited within the ISA are discussed in the EREF ISA Summary).

Planned preventative maintenance (PM) includes periodic refurbishment, partial or complete overhaul, or replacement of IROFS, as necessary, to ensure the continued availability and reliability of the safety function assumed in the ISA documentation. In determining the frequency of any PM, consideration is given to appropriately balancing the objective of preventing failures through maintenance, against the objective of minimizing unavailability of IROFS because of PM. In addition, feedback from PM and corrective maintenance and the results of incident investigations and identified root causes are used, as appropriate, to modify the frequency or scope of PM.

Planned maintenance on IROFS that do not have redundant functions available will provide for compensatory measures to be put into place to ensure that the IROFS function is performed until it is put back into service.

Corrective maintenance involves repair or replacement of equipment that has unexpectedly degraded or failed. Corrective maintenance restores the equipment to acceptable performance through a planned, systematic, controlled, and documented approach for the repair and replacement activities.

Following any maintenance on IROFS, and before returning an IROFS to operational status, functional testing of the IROFS, as necessary, is performed to ensure the IROFS is capable of performing its intended safety function.

Training and Qualifications

Activities involving IROFS require that personnel involved at each level (from design through and including any assumed process implementation steps or actions) have and maintain the appropriate training and qualifications. Employees are provided with formal training to establish the knowledge foundation and on-the-job training to develop work performance skills. For process implemented steps or actions, a needs/job analysis is performed and tasks are identified to ensure that appropriate training is provided to personnel working on tasks related to IROFS. Minimum training requirements are developed for those positions whose activities are relied on for safety. Initial identification of job-specific training requirements is based on experience. Entry-level criteria (e.g., education, technical background, and/or experience) for these positions are contained in position descriptions.

Qualification is indicated by successful completion of prescribed training, demonstration of the ability to perform assigned tasks, and where required by regulation, maintaining a current and valid license or certification.

Continuing training is provided, as required, to maintain proficiency in specific knowledge and skill related activities. For all IROFS involving process implemented steps or actions, annual refresher training or requalification is required (any exceptions credited within the ISA are discussed in the EREF ISA Summary).

Procedures

All activities involving IROFS and any items that may affect the function of IROFS are conducted in accordance with approved procedures. Each of the other IROFS management measures (e.g., configuration management, maintenance, training) is implemented via approved procedures. These procedures are intended to provide a pre-planned method of conducting the activity in order to eliminate errors due to on-the-spot analysis and judgments.

All procedures are sufficiently detailed that qualified individuals can perform the required functions without direct supervision. However, written procedures cannot address all contingencies and operating conditions. Therefore, they contain a degree of flexibility appropriate to the activities being performed. Procedural guidance exists to identify the manner in which procedures are to be implemented. For example, routine procedural actions may not require the procedure to be present during implementation of the actions, while complex jobs, or checking with numerous sequences may require valve alignment checks, approved operator aids, or in-hand procedures that are referenced directly when the job is conducted.

To support the requirement to minimize challenges to IROFS, specific procedures for abnormal events are also provided. These procedures are based on a sequence of observations and actions to prevent or mitigate the consequences of an abnormal situation.

Audits and Assessments

Audits are focused on verifying compliance with regulatory and procedural requirements and licensing commitments. Assessments are focused on effectiveness of activities and ensuring that IROFS are reliable and are available to perform their intended safety functions as documented in the ISA. The frequency of audits and assessments is based upon the status and safety importance of the activities being performed and upon work history. However, at a minimum, all activities associated with maintaining IROFS will generally be audited or assessed on an annual basis (any exceptions credited within the ISA are discussed in the EREF ISA Summary).

Incident Investigations

Incident investigations are conducted within the Corrective Action Program (CAP). Incidents associated with IROFS and any items that may affect the function of IROFS encompass a range of items, including (a) processes that behave in unexpected ways, (b) procedural activities not performed in accordance with the approved procedure, (c) discovered deficiency, degradation, or non-conformance with an IROFS, or any items that may affect the function of IROFS. Additionally, audit and assessment results are tracked in the Corrective Action Program.

Feedback from the results of incident investigations and identified root causes are used, as appropriate, to modify management measures to provide continued assurance that the reliability and availability of IROFS remain consistent with the performance requirements assumed in the ISA documentation.

Records Management

All records associated with IROFS, and any items that may affect the function of IROFS, shall be managed in a controlled and systematic manner in order to provide identifiable and retrievable documentation. Applicable design specifications, procurement documents, or other documents specify the QA records to be generated by, supplied to, or held, in accordance with approved procedures are included.

Other Quality Assurance Elements

Other quality assurance elements associated with IROFS or any items that may affect the function of IROFS that are required to ensure the IROFS are available and reliable to perform the function when needed to comply with the performance requirements assumed in the ISA documentation, are discussed in the EREF ISA Summary.

3.1 INTEGRATED SAFETY ANALYSIS METHODS

This section outlines the approach utilized for performing the Integrated Safety Analysis (ISA) of the process accident sequences. The approach used for performing the ISA is consistent with Example Procedure for Accident Sequence Evaluation, Appendix A to Chapter 3 of NUREG-1520 (NRC, 2002a). This approach employs a semi-quantitative risk index method for categorizing accident sequences in terms of their likelihood of occurrence and their consequences of concern. The risk index method framework identifies which accident sequences have consequences that could exceed the performance requirements of 10 CFR 70.61 (CFR, 2008c) and, therefore, require designation of Items Relied on for Safety (IROFS) and supporting management measures. Descriptions of these general types of higher consequence accident sequences are reported in the ISA Summary.

The ISA is a systematic analysis to identify plant and external hazards and the potential for initiating accident sequences, the potential accident sequences, the likelihood and consequences, and the IROFS.

The ISA uses a hazard analysis method to identify the hazards which are relevant for each system or facility. The ISA Team reviewed the hazard identified for the "credible worst-case" consequences. All credible high or intermediate severity consequence accident scenarios were assigned accident sequence identifiers, accident sequence descriptions, and a risk index determination was made.

The risk index method is regarded as a screening method, not as a definitive method of proving the adequacy or inadequacy of the IROFS for any particular accident.

The tabular accident summary resulting from the ISA identifies, for each sequence, which engineered or administrative IROFS must fail to allow the occurrence of consequences that exceed the levels identified in 10 CFR 70.61 (CFR, 2008c).

For this license application, two ISA Teams were formed. This was necessary because the sensitive nature of some of the facility design information related to the enrichment process required the use of personnel with the appropriate national security clearances. This team performed the ISA on the Cascade System, Dump System, Centrifuge Test System and the Centrifuge Post Mortem System. This ISA Team is referred to as the Classified ISA Team. The Non-Classified Team, referred to in the remainder of this text as the ISA Team, performed the ISA on the remainder of the facility systems and structures. In addition, the (non-classified) ISA Team performed the External Events and Fire Hazard Assessment for the entire facility.

Experienced personnel with familiarity with the gas centrifuge enrichment technology safety analysis were used on the ISA Team. This provides a good peer check of the final ISA results.

A procedure was developed to guide the conduct of the ISA. This procedure was used by both teams. In addition, there were common participants on both teams for the core process systems to further integrate the approaches employed by both teams. These steps were taken to ensure the consistency of the results of the two teams. A non-classified summary of the results of the Classified ISA has been prepared and incorporated into the ISA Summary.

The non-classified ISA Team performed a review of the changes associated with the expansion of the facility from 3.3 million SWU to 6.6 million SWU. Additional accident sequences and events were identified to address the addition of new structures, systems, and components. The new accident sequences and events were not unique or original in concept. They are an application of the previously identified accident sequences and events to the new structures, systems, and components. A classified ISA team review was not required as there were no functional changes to classified systems and components. The non-classified ISA team review

included external events and facility fires for any site-wide impact on structures, systems, and components as well as system integration. No new IROFS were required to cope with the new accident sequences or events. The consequences of the new accident sequences and events were bounded by the original analyses.

3.1.1 Hazard Identification

The hazard and operability (HAZOP) analysis method was used for identifying the hazards for the Uranium Hexafluoride (UF_6) process systems and Technical Support Building systems. This method is consistent with the guidance provided in NUREG-1513 (NRC, 2001a) and NUREG-1520 (NRC, 2002a). The hazards identification process results in identification of physical, radiological or chemical characteristics that have the potential for causing harm to site workers, the public, or to the environment. Hazards are identified through a systematic review process that entails the use of system descriptions, piping and instrumentation diagrams, process flow diagrams, plot plans, topographic maps, utility system drawings, and specifications of major process equipment. In addition, criticality hazards identification were performed for the areas of the facility where fissile material is expected to be present. The criticality safety analyses contain information about the location and geometry of the fissile material and other materials in the process, for both normal and credible abnormal conditions. The ISA input information is included in the ISA documentation and is available to be verified as part of an on-site review.

The hazard identification process documents materials that are:

- Radioactive
- Fissile
- Flammable
- Explosive
- Toxic
- Reactive.

The hazard identification also identifies potentially hazardous process conditions. Most hazards were assessed individually for the potential impact on the discrete components of the process systems. However, hazards from fires (external to the process system) and external events (seismic, severe weather, etc.) were assessed on a facility wide basis.

For the purpose of evaluating the impacts of fire hazards, the ISA team considered the following:

- Postulated the development of a fire occurring in in-situ combustibles from an unidentified ignition source (e.g., electrical shorting, or other source)
- Postulated the development of a fire occurring in transient combustibles from an unidentified ignition source (e.g., electrical shorting, or other source)
- Evaluated the uranic content in the space and its configuration (e.g., UF_6 solid/gas in cylinders, UF_6 gas in piping, UF_6 and/or byproducts bound on chemical traps, Uranyl Fluoride (UO_2F_2) particulate on solid waste or in solution, etc.). The appropriate configuration was considered relative to the likelihood of the target releasing its uranic content as a result of a fire in the area.

In order to assess the potential severity of a given fire and the resulting failures to critical systems, the facility Fire Hazard Analysis was consulted. However, since the design supporting

the license submittal for this facility is not yet at the detailed design stage, detailed in-situ combustible loading and in-situ combustible configuration information is not yet available. Therefore, in order to place reasonable and conservative bounds on the fire scenarios analyzed, the ISA Team estimated in-situ combustible loadings based on information of the in-situ combustible loading for facilities of comparable capacity and configuration.

Further, preliminary layouts of the facility were used to identify where bulk electrical cabling routings would be expected and which areas, based on operations present, might use/store combustible materials in significant quantity. This is in addition to the reviews described in the NEF SAR. Combustible loading in areas where bulk UF_6 storage/handling occurs are expected to be very low.

The Fire Safety Management Program will limit the allowable quantity of transient combustibles in critical plant areas (i.e., uranium areas). Nevertheless, the ISA Team still assumed the presence of moderate quantities of ordinary (Class A) combustibles (e.g., trash, packing materials, maintenance items or packaging, etc.) in excess of anticipated procedural limits. This was not considered a failure of the associated administrative IROFS feature for controlling/ minimizing transient combustible loading in all radiation/uranium areas. Failure of the IROFS is connoted as the presence of extreme or severe quantities of transients (e.g., large piles of combustible solids, bulk quantities of flammable/combustible liquids or gases, etc.). Given the orientation and training that facility employees will receive indicating that these types of fire hazards are unacceptable, the administrative IROFS preventing severe accumulations has been assigned a high degree of reliability. Refer to the EREF ISA Summary for additional discussion.

Fires that involve additional in-situ or transient combustibles from outside each respective fire area could result in exposure of additional uranic content being released in a fire beyond the quantities assumed above. For this reason, fire barriers are needed to ensure that fires cannot propagate from non-uranium containing areas with significant combustible content into uranium (U) areas or from one U area to another U area (unless the uranium content in the space is insignificant, i.e., would be a low consequence event or the propagation of fire into the adjacent area would not result in the release of additional material). This is a change from the NEF where the combustible content and the material release were not used to determine the need for fire barriers. A more detailed evaluation of the need for fire barriers is performed by accounting for combustible content and additional material release.

Fire barriers shall be designed with adequate safety margin such that the total combustible loading (in-situ and transient) allowed to expose the barrier will not exceed 80% of the hourly fire resistance rating of the barrier.

For external events, the impacts were evaluated for the following hazards:

External events were considered at the site and facility level versus at individual system nodes. Specific external event HAZOP guidewords were developed for use during the external event portion of the ISA. The external event ISA considered both natural phenomena and man-made hazards. During the external event ISA team meeting, each area of the plant was discussed as to whether or not it could be adversely affected by the specific external event under consideration. If so, specific consequences were then discussed. If the consequences were known or assumed to be high, then a specific design basis with a likelihood of highly unlikely would be selected.

Given that external events were considered at the facility level, the ISA for external events was completed after the ISA team meetings for all plant systems were completed. This provided the best opportunity to perform the ISA at the site or facility level. Each external event was assessed for both the uncontrolled case and then for the controlled case. The controlled cases

could be a specific design basis for that external event, IROFS, or a combination of both. An Accident Sequence and Risk matrix was prepared for each external event.

External events evaluated included:

- Seismic
- Tornado and Tornado Missile
- High Wind and Wind Missile
- Snow and Ice
- Flooding
- Local Precipitation
- Volcano
- Transportation and Nearby Facility Accidents
    - Aircraft
    - Pipelines
    - Highway
    - Railroad
    - Nearby Facilities
- Internal Flooding from On-Site Above Ground Liquid Storage Tanks.

Compared with the NEF, “Volcano” has been added to the list of external events evaluated as a result of the EREF surrounding geology and “On-site Use of Natural Gas” has been deleted as natural gas will not be used on-site at EREF.

The ISA is intended to give assurance that the potential failures, hazards, accident sequences, scenarios, and IROFS have been investigated in an integrated fashion, so as to adequately consider common mode and common cause situations. Included in this integrated review is the identification of IROFS function that may be simultaneously beneficial and harmful with respect to different hazards, and interactions that might not have been considered in the previously completed sub-analyses. This review is intended to ensure that the designation of one IROFS does not negate the preventive or mitigation function of another IROFS. An integration checklist is used by the ISA Team as a guide to facilitate the integrated review process.

Some items that warrant special consideration during the integration process are:

- Common mode failures and common cause situations.
- Support system failures such as loss of electrical power or water. Such failures can have a simultaneous effect on multiple systems.
- Divergent impacts of IROFS. Assurance must be provided that the negative impacts of an IROFS, if any, do not outweigh the positive impacts; i.e., to ensure that the application of an IROFS for one safety function does not degrade the defense-in-depth of an unrelated safety function.

- Other safety and mitigating factors that do not achieve the status of IROFS that could impact system performance.
- Identification of scenarios, events, or event sequences with multiple impacts, i.e. impacts on chemical safety, fire safety, criticality safety, and/or radiation safety. For example, a flood might cause both a loss of containment and moderation impacts.
- Potential interactions between processes, systems, areas, and buildings; any interdependence of systems, or potential transfer of energy or materials.
- Major hazards or events, which tend to be common cause situations leading to interactions between processes, systems, buildings, etc.

The potential for an external off-site wildland fire was dismissed as a non-credible threat to the facility. The topography as summarized from the facility Environmental Report is a mix of agricultural land, rangeland and barren. The agricultural vegetation consists of low grasses, predominantly crested wheatgrass and cheatgrass and the rangeland vegetation is dominated by Wyoming big sagebrush, dwarf goldenbush, and Sandberg bluegrass. All of these forms of vegetation are characterized by low density and low height with mean heights well below 1 m (3.3 ft).

The closest point of approach for any exterior UF_6 handling area is for an Empty Cylinder Storage Pad and a Full Tails Cylinder Storage Pad, which are approximately 30 m (100 ft) inside the controlled area boundary. The UF_6 cylinders that will be stored on these pads are protective against fires of a severity required for interstate transportation – an 800ºC (1,472ºF), 30-minute engulfing fire. All process structures are built of non-combustible materials with composite built-up roofing. The closest approach of a process structure to the security fence is about 213 m (700 ft). It is not credible for the rangeland or agricultural vegetation proximate to the EREF site to reach a fire severity that will threaten a process structure or cylinder storage area. On-site landscaping will be developed and maintained to ensure no fire hazardous configurations are introduced and any land use within the owner controlled property will similarly be managed to ensure no fire hazardous conditions are allowed to develop due to land use.

3.1.2 Process Hazard Analysis Method

As noted above, the HAZOP method was used to identify the process hazards. The HAZOP process hazard analysis (PHA) method is consistent with the guidance provided in NUREG-1513 (NRC, 2001a). Implementation of the HAZOP method was accomplished by either validating the Enrichment Technologies (ETC), the EREF process system vendor, HAZOPs for the EREF design or performing a new HAZOP for systems where there were no existing HAZOPs. In general, new HAZOPs were performed for the Technical Support Building (TSB) systems; Blending Sampling and Preparation Building (BSPB) systems; Cylinder Receipt and Shipping Building (CRSB) systems; and for UF_6 material handling systems. The new HAZOPs performed for the BSPB, CRSB, and UF_6 material handling systems represents an expansion of new HAZOPs performed compared with the NEF. In cases where there was an existing HAZOP, the ISA Team, through the validation process, developed a new HAZOP.

For the UF_6 process systems, this portion of the ISA was a validation of the HAZOPs provided by ETC. The validation process involved workshop meetings with the ISA Team. In the workshop meeting, the ISA Team challenged the results of the ETC HAZOPs. As necessary the HAZOPs were revised/updated to be consistent with the requirements identified in 10 CFR 70 (CFR, 2008b) and as further described in NUREG-1513 (NRC, 2001a) and NUREG-1520 (NRC, 2002a).

To validate the ETC HAZOPs, the ISA Team performed the following tasks:

- The ETC process engineer described the salient points of the process system covered by the HAZOP being validated.
- The ISA Team divided the process "Nodes" into reasonable functional blocks.
- The process engineer described the salient points of the items covered by the "Node" being reviewed.
- The ISA Team reviewed the "Guideword" used in the ETC HAZOP to determine if the HAZOP is likely to identify all credible hazards. A representative list of the guidewords used by the ISA Team is provided in Table 3.1-1, HAZOP Guidewords, to ensure that a complete assessment was performed.
- The ISA Team Leader introduced each Guideword being considered in the ISA HAZOP and the team reviewed and considered the potential hazards.
- For each potential hazard, the ISA Team considered the causes, including potential interactions among materials. Then, for each cause, the ISA Team considered the consequences and consequence severity category for the consequences of interest (Criticality Events, Chemical Releases, Radiation Exposure, Environment impacts). A statement of "No Safety Issue" was noted in the system HAZOP table for consequences of no interest such as maintenance problems or industrial personnel accidents.
- For each hazard, the ISA Team considered existing safeguards designed to prevent the hazard from occurring.
- For each hazard, the ISA Team also considered any existing design features that could mitigate/reduce the consequences.
- The ETC HAZOP was modified to reflect: the ISA Team's input in the areas of hazards, causes, consequences, safeguards and mitigating features.
- For each external event hazard, the ISA Team determined if the external hazard is credible (i.e., external event initiating frequency $>10^{-6}$ per year).
- When all of the Guidewords had been considered for a particular node, the ISA Team applied the same process and guidewords to the next node until the entire process system was completed.

The same process as above was followed for the TSB, BSPB, CRSB, and UF_6 material handling systems, except that instead of using the validation process, the ISA Team developed a completely new HAZOP. This HAZOP was then used as the hazard identification input into the remainder of the process.

The results of the ISA Team workshops are summarized in the ISA HAZOP Table, which forms the basis of the hazards portion of the Hazard and Risk Determination Analysis. The HAZOP tables are contained in the ISA documentation. The format for this table, which has spaces for describing the node under consideration and the date of the workshop, is provided in Table 3.1-2, ISA HAZOP Table Sample Format. This table is divided into seven (7) columns:

GUIDEWORD	Identifies the Guideword under consideration.
HAZARD	Identifies any issues that are raised.
CAUSES	Lists any and all causes of the hazard noted.

CONSEQUENCES	Identifies the potential and worst case consequence and consequences severity category if the hazard goes uncontrolled.
PREVENTIVE FACTORS	Identifies the engineered and/or administrative protection designed to prevent the hazard from occurring.
MITIGATIVE FACTORS	Identifies any protection, engineered or otherwise, that can mitigate/reduce the consequences.
COMMENTS/ACTIONS	Notes any comments and any actions requiring resolution.

This approach was used for all of the process system hazard identifications. The "Fire" and "External Events" guidewords were handled as a facility-wide assessment and were not explicitly covered in each system hazard evaluation.

The results of the HAZOP are used directly as input to the risk matrix development.

3.1.3 Risk Matrix Development

3.1.3.1 Consequence Analysis Method

10 CFR 70.61 (CFR, 2008c) specifies two categories for accident sequence consequences: "high consequences" and "intermediate consequences." Implicitly there is a third category for accidents that produce consequences less than "intermediate." These are referred to as "low consequence" accident sequences. The primary purpose of PHA is to identify all uncontrolled and unmitigated accident sequences. These accident sequences are then categorized into one of the three consequence categories (high, intermediate, low) based on their analyzed radiological, chemical, and/or environmental impacts.

For evaluating the magnitude of the accident consequences, calculations were performed using the methodology described in the ISA documentation. Because the consequences of concern are the chemotoxic exposure to hydrogen fluoride (HF) and UO_2F_2, the dispersion methodology discussed in SAR Section 6.3.2 was used. The dose consequences for all of the accident sequences were evaluated and compared to the criteria for "high" and "intermediate" consequences. The inventory of uranic material for each accident considered was dependent on the specific accident sequence. For criticality accidents, the consequences were conservatively assumed to be high for both the public and workers.

Table 3.1-3, Consequence Severity Categories Based on 10 CFR 70.61, presents the radiological and chemical consequence severity limits of 10 CFR 70.61 (CFR, 2008c) for each of the three accident consequence categories. Table 3.1-4, Definition of Consequence Severity Category for Chemical Exposure, provides information on the chemical quantitative consequence category limits specific to the EREF.

3.1.3.2 Likelihood Evaluation Method

10 CFR 70.61 (CFR, 2008c) also specifies the permissible likelihood of occurrence of accident sequences of different consequences. "High consequence" accident sequences must be "highly unlikely" and "intermediate consequence" accident sequences must be "unlikely." Implicitly, accidents in the "low consequence" category can have a likelihood of occurrence greater than "unlikely" or simply "not unlikely." Table 3.1-5, Likelihood Categories Based on 10 CFR 70.61,

shows the likelihood of occurrence limits of 10 CFR 70.61 (CFR, 2008c) for each of the three likelihood categories.

The definitions of "not unlikely" and "unlikely" are taken from NUREG-1520 (NRC, 2002a). The definition of "highly unlikely" is taken from NUREG-1520 (NRC, 2002a). Additionally, a qualitative determination of "highly unlikely" can apply to passive design component attributes (e.g., tanks, piping, cylinders, etc.) of the facility that do not rely on human interface to perform the criticality safety function (i.e., termed "safe-by-design"). Passive IROFS that contain a safe-by-design component attribute are those components that by their physical size or arrangement have been shown to have a $k_{eff} < 0.95$. The definition of passive IROFS that contain a safe-by-design component attribute encompasses two different categories of components. The first category includes those components that are safe-by-volume, safe-by-diameter or safe-by-slab thickness. A set of generic conservative criticality calculations has determined the maximum volume, diameter, or slab thickness (i.e., safe value) that would result in a $k_{eff} < 0.95$. A component in this category has a volume, diameter or slab thickness that is less than the associated safe value resulting from the generic conservative criticality calculations and therefore the k_{eff} associated with this component is < 0.95. The components in the second category require a more detailed criticality analysis (i.e., a criticality analysis of the physical arrangement of the component's design configuration) to show that k_{eff} is < 0.95. In the second category of components, the design configuration is not bounded by the results of the generic conservative criticality calculations for maximum volume, diameter, or slab thickness that would result in a $k_{eff} < 0.95$. Examples of components in this second category are the product pumps that have volumes greater than the safe-by-volume value, but are shown by specific criticality analysis to have a $k_{eff} < 0.95$.

For failure of passive IROFS that contain a safe-by-design component attribute to be considered "highly unlikely," these components must also meet the criterion that the only potential means to effect a change that might result in a failure to function, would be to implement a design change (i.e., geometry deformation as a result of a credible process deviation or event does not adversely impact the performance of the safety function). The evaluation of the potential to adversely impact the safety function of these passive design features includes consideration of potential mechanisms to cause bulging, corrosion, and breach of confinement/leakage and subsequent accumulation of material. The evaluation further includes consideration of adequate controls to ensure that the double contingency principle is met. For each of these passive design components, it must be concluded, that there is no credible means to effect a geometry change that might result in a failure of the safety function and that significant margin exists. For components that are safe-by-volume, safe-by-diameter, or safe-by-slab thickness (i.e., first category of passive IROFS that contain a safe-by-design component attribute), significant margin is defined as a margin of at least 10%, during both normal and upset conditions, between the actual design parameter value of the component and the value of the corresponding critical design attribute. For components that require a more detailed criticality analysis (i.e., second category of passive IROFS that contain a safe-by-design component attribute), significant margin is defined as $k_{eff} < 0.95$, where $k_{eff} = k_{calc} + 3\sigma_{calc}$. This margin is considered acceptable since the calculation of k_{eff} also conservatively assumes the components are full of uranic breakdown material at maximum enrichment, the worst credible moderation conditions exist, and the worst credible reflection conditions exist. In addition, the configuration management system required by 10 CFR 70.72 (CFR, 2008f) (implemented by the EREF Configuration Management Program) ensures the maintenance of the safety function of these features and assures compliance with the double contingency principle, as well as the defense-in-depth criterion of 10 CFR 70.64(b) (CFR, 2008h).

The definition of "not credible" is also taken from NUREG-1520 (NRC, 2002a). If an event is not credible, IROFS are not required to prevent or mitigate the event. The fact that an event is not "credible" must not depend on any facility feature that could credibly fail to function. One cannot claim that a process does not need IROFS because it is "not credible" due to characteristics provided by IROFS. The implication of "credible" in 10 CFR 70.61 (CFR, 2008c) is that events that are not "credible" may be neglected.

Any one of the following independent acceptable sets of qualities could define an event as not credible:

a. An external event for which the frequency of occurrence can conservatively be estimated as less than once in a million years

b. A process deviation that consists of a sequence of many unlikely human actions or errors for which there is no reason or motive (In determining that there is no reason for such actions, a wide range of possible motives, short of intent to cause harm, must be considered. Necessarily, no such sequence of events can ever have actually happened in any fuel cycle facility.)

c. Process deviations for which there is a convincing argument, given physical laws that they are not possible, or are unquestionably extremely unlikely.

3.1.3.3 Risk Matrix

The three categories of consequence and likelihood can be displayed as a 3 x 3 risk index matrix. By assigning a number to each category of consequence and likelihood, a qualitative risk index can be calculated for each combination of consequence and likelihood. The risk index equals the product of the integers assigned to the respective consequence and likelihood categories. The risk index matrix, along with computed risk index values, is illustrated in Table 3.1-6, Risk Matrix with Risk Index Values. The shaded blocks identify accidents of which the consequences and likelihoods yield an unacceptable risk index and for which IROFS must be applied.

The risk indices can initially be used to examine whether the consequences of an uncontrolled and unmitigated accident sequence (i.e., without any IROFS) could exceed the performance requirements of 10 CFR 70.61 (CFR, 2008c). If the performance requirements could be exceeded, IROFS are designated to prevent the accident or to mitigate its consequences to an acceptable level. A risk index value less than or equal to four means the accident sequence is acceptably protected and/or mitigated. If the risk index of an uncontrolled and unmitigated accident sequence exceeds four, the likelihood of the accident must be reduced through designation of IROFS. In this risk index method, the likelihood index for the uncontrolled and unmitigated accident sequence is adjusted by adding a score corresponding to the type and number of IROFS that have been designated.

3.1.4 Risk Index Evaluation Summary

The results of the ISA are summarized in tabular form. This table includes the accident sequences identified for this facility. The accident sequences were not grouped as a single accident type but instead were listed individually in the table. The table has columns for the initiating event and for IROFS. IROFS may be mitigative or preventive. Mitigative IROFS are measures that reduce the consequences of an accident. The phrase "uncontrolled, and/or unmitigated consequences" describes the results when the system of existing preventive IROFS fails and existing mitigation also fails. Mitigated consequences result when the preventive

IROFS fail, but mitigative measures succeed. Index numbers are assigned to initiating events, IROFS failure events, and mitigation failure events, based on the reliability characteristics of these items.

With redundant IROFS and in certain other cases, there are sequences in which an initiating event places the system in a vulnerable state. While the system is in this vulnerable, state, an IROFS must fail for the accident to result. Thus, the frequency of the accident depends on the frequency of the first event, the duration of vulnerability, and the frequency of the second IROFS failure. For this reason, the duration of the vulnerable state is considered, and a duration index is assigned. The values of all index numbers for a sequence, depending on the number of events involved, are added to obtain a total likelihood index, T. Accident sequences are then assigned to one of the three likelihood categories of the risk matrix, depending on the value of this index in accordance with Table 3.1-8, Determination of Likelihood Category.

The values of index numbers in accident sequences are assigned considering the criteria in Table 3.1-9 through Table 3.1-11. Each table applies to a different type of event. Table 3.1-9, Failure Frequency Index Numbers, applies to events that have frequencies of occurrence, such as initiating events and certain IROFS failures. In addition to further support the failure frequency index numbers used in the ISA for accident initiators that are the same as the NEF ISA accident initiators (i.e., when ISA Summary accident descriptions state “This failure frequency index was selected based on evidence from history of a similarly designed European plant . . .”), operating data from similar systems, components, and safety functions at the Urenco Almelo SP5 facility, which is similar to the NEF and EREF design, was reviewed for NEF. This review was conducted by Urenco using searches of computer-based databases at the Urenco Almelo facility for the NEF. A list of ISA Summary initiating events caused by component failures or human events was developed. Using this list of initiating events, keyword searches of computer based databases for plant control systems, operational logs, and maintenance records was performed by Urenco for NEF. The resulting information relevant to the Almelo SP5 facility was extracted for further review, evaluation, and comparison to the failure frequency index number(s) used in the applicable NEF ISA Summary accident sequences. Due to the similarity in designs, these failure frequency index numbers have also been applied to the applicable EREF ISA Summary accident sequences.

For failure frequency index numbers used in the ISA associated with accident initiators resulting from component failures that are not the same as the NEF ISA accident initiators (i.e., when ISA Summary accident descriptions state, “This failure frequency index was selected based on evidence from the nuclear industry..."), operating data from similar systems, components, and safety functions at Department of Energy, commercial nuclear industry facilities, and research facilities is reviewed. This review is conducted using the Savannah River Site Hazard Analysis Generic Initiator Database (SRP, 1998) and Generic Component Failure Data Base for Light Water and Liquid Sodium Reactor PRAs (EGG, 1983). The Savannah River Site Hazard Analysis Generic Initiator Database is a set of generic frequencies for various common accident initiators within the Savannah River Site compiled from accident information, Hazards Analysis Checklists, Safety Analysis Reports, and other relevant data sources from the Savannah River Site. The Generic Component Failure Data Base for Light Water and Liquid Sodium Reactor PRAs is a comprehensive generic component failure database that was developed from available plant data obtained from the Nuclear Computerized Library for Assessing Reactor Reliability (NUCLARR), the Centralized Reliability Data Organization (CREDO) data programs, and other sources. The information resulting from a review of these two industry data sources is compared to similar events in the Urenco Almelo facility database and the more conservative data for the failure event is used.

For failure frequency index numbers used in the ISA associated with accident initiators resulting from operator errors that are not the same as the NEF ISA accident initiators (i.e., when ISA Summary accident descriptions state, “This failure frequency index was selected based on the Technique for Human Error Rate Prediction (THERP) Methodology"), the THERP Methodology is described in the Handbook of Human Reliability Analysis with Emphasis on Nuclear Power Plant Applications (NRC, 1983). THERP is a methodology to predict human error probabilities and to evaluate the degradation of a man-machine system likely to be caused by human errors alone, or in connection with equipment functioning, operational procedures and practices, or other systems and human characteristics that influence systems behavior. The method uses conventional reliability technology with modifications appropriate to the greater variability, unpredictability, and interdependence of human performance as compared with that of equipment performance. The steps in THERP are similar to those in conventional reliability analysis, except that human activities are substituted for equipment outputs.

When failure probabilities are required for an event, Table 3.1-10, Failure Probability Index Numbers, provides the index values. Table 3.1-11, Failure Duration Index Numbers, provides index values for durations of failures.

These are used in certain accident sequences where two IROFS must simultaneously be in a failed state. In this case, one of the two controlled parameters will fail first. It is then necessary to consider the duration that the system remains vulnerable to failure of the second. This period of vulnerability can be terminated in several ways. The first failure may be "fail-safe" or be continuously monitored, thus alerting the operator when it fails so that the system may be quickly placed in a safe state. Or the IROFS may be subject to periodic surveillance tests for hidden failures. When hidden failures are possible, these surveillance intervals limit the duration that the system is in a vulnerable state. The reverse sequences, where the second IROFS fails first, should be considered as a separate accident sequence. This is necessary because the failure frequency and the duration of outage of the first and the second IROFS may differ. The values of these duration indices are not merely judgmental. They are directly related to the time intervals used for surveillance and the time needed to render the system safe.

The duration of failure is accounted for in establishing the overall likelihood that an accident sequence will continue to the defined consequence. Thus, the time to discover and repair the failure is accounted for in establishing the risk of the postulated accident.

The total likelihood index is the sum of the indices for all the events in the sequence, including those for duration. Consequences are assigned to one of the three consequence categories of the risk matrix, based on calculations or estimates of the actual consequences of the accident sequence. The consequence categories are based on the levels identified in 10 CFR 70.61 (CFR, 2008c). Multiple types of consequences can result from the same event. The consequence category is chosen for the most severe consequence.

In summarizing the ISA results, Table 3.7-1, Accident Sequence and Risk Index, provides two risk indices for each accident sequence to permit evaluation of the risk significance of the IROFS involved. To measure whether an IROFS has high risk significance, the table provides an "uncontrolled risk index," determined by modeling the sequence with all IROFS as failed (i.e., not contributing to a lower likelihood). In addition, a “controlled risk index” is also calculated, taking credit for the low likelihood and duration of IROFS failures. When an accident sequence has an uncontrolled risk index exceeding four but a controlled risk index of less than four, the IROFS involved have high risk significance because they are relied on to achieve acceptable safety performance. Thus, use of these indices permits evaluation of the possible benefit of improving IROFS and also whether a relaxation may be acceptable.

3.2 INTEGRATED SAFETY ANALYSIS TEAM

The EREF subject matter discussed in this section is essentially identical to the National Enrichment Facility (NEF) SAR (LES, 2005) with the exception that for the non-core process systems, process expertise was provided by SGN rather than ETC.

There were two ISA Teams that were employed in the ISA. The first team worked on the non-classified portions of the facility and is referred to in the text as the ISA Team. The second team, referred to as the Classified ISA Team, performed the ISA on the classified elements of the facility. Both teams were selected with credentials consistent with the requirements in 10 CFR 70.65 (CFR, 2008a) and the guidance provided in NUREG-1520 (NRC, 2002a). To facilitate consistency of results, common membership was dictated as demonstrated below (i.e., some members of the Non-Classified Team for the core process systems participated on the Classified Team. One of the members of the Classified Team has had formal ISA Team Leader Training. In addition, the Classified ISA Team Leader participated in some of the non-classified ISA Team meetings.)

The ISA was performed by a team with expertise in engineering, safety analysis and enrichment process operations. The team included personnel with experience and knowledge specific to each process or system being evaluated. The team was comprised of individuals who have experience, individually or collectively, in:

- Nuclear criticality safety
- Radiological safety
- Fire safety
- Chemical process safety
- Operations and maintenance
- ISA methods.

The ISA team leaders are trained, experienced, and knowledgeable in the ISA method(s) chosen for the hazard and accidents evaluations. Collectively, the team had an understanding of all process operations and hazards under evaluation.

The ISA Manager was responsible for the overall direction of the ISA. The process expertise for the core process systems was provided by the ETC personnel on the team. In addition, the team leader had an adequate understanding of the process operations and hazards evaluated in the ISA, but is not the responsible cognizant engineer or enrichment process expert.

Process expertise for the non-core process systems was provided by the SGN personnel on the ISA Team. SGN, AREVA's engineering subsidiary, is the engineer for the Georges Besse II gas centrifuge enrichment facility currently under construction in France.

3.3 COMPLIANCE ITEM COMMITMENTS

The subject matter discussed in this section is extracted from the EREF ISA Summary. While EREF utilized methods that were similar to those utilized by NEF to develop the information, there are substantial differences in the material.

3.3.1 IROFS

- For accident sequences PT2-3, PT2-6, PT2-9 DS1-2, DS1-3, DS1-4, DS2-1, DS2-2, DS2-3, DS2-4, DS2-5, DS8-1, DS8-2, SW1-1, SW1-2, CL1-1, CL1-2, CL1-3, LW1-1, LW1-2, LW1-3, LW4-3, LW4-4, LW4-5, CM5-1, CM6-1, CP1-1, CP5-7, CP5-8, VR1-2, VR1-3, VR2-1, VR2-2, PB2-6, PB3-2, PB3-3, and PB3-4, an Initiating Event Frequency (IEF) index number of "-2" may be assigned based on evidence from the operating history of similar designed Urenco European plants. Detailed justifications for the IEF index numbers of “2" will be developed during detailed design. If the detailed justification does not support the IEF index number of "-2," then the IEF index number assigned and the associated accident sequence(s) will be re-evaluated and revised, as necessary, consistent with overall ISA methodology.
- For Administrative Control IROFS that involve "use of "a component or device, a Failure Probability Index Number (FPIN) of "-2" may be assigned provided the IROFS is a routine, simple, action that either: (1) involves only one or two decision points or (2) is highly detailed in the associated implementing procedure. Alternately, an FPIN of "-3" may be assigned for this type of IROFS provided the criteria specified above for an FPIN of "-2" are met and the IROFS is enhanced by requiring independent verification of the safety function. This enhancement shall meet the requirements for independent verification identified below. If these criteria cannot be met, then the FPIN assigned to the IROFS and the associated accident sequence(s) will be re-evaluated and revised, as necessary, consistent with the overall ISA methodology.
- For Administrative Control IROFS that involve "verification of a state or condition, an FPIN of "-2" may be assigned provided the IROFS is a routine action performed by one person, with proceduralized, objective, acceptance criteria. Alternately, an FPIN of "-3" may be assigned for this type of IROFS provided the criteria specified above for an FPIN of "-2" are met and the IROFS is enhanced by requiring independent verification of the safety function. This enhancement shall meet the requirements for independent verification identified below. If these criteria cannot be met, then the FPIN assigned to the IROFS and the associated accident sequence(s) will be re-evaluated and revised, as necessary, consistent with the overall ISA methodology.
- For Administrative Control IROFS that involve “independent sampling," different samples are obtained and an FPIN of "-2" may be assigned provided at least three of the following four criteria are met.
    1. Different methods/techniques are used for sample analysis.
    2. Samples are obtained from different locations.
    3. Samples are obtained at different times. The time period between collections of the different samples shall be sufficient to ensure results are meaningful and representative of the material sampled.
    4. Samples are obtained by different personnel.

If at least three of the above criteria cannot be met, then the FPIN assigned to the IROFS and the associated accident sequence(s) will be re-evaluated and revised, as necessary, consistent with the overall ISA methodology.

- Upon completion of the design of IROFS, the IROFS boundaries will be defined. In defining the boundaries for each IROFS, ISA Summary Appendix A, Guidelines for Development of Boundary Definitions for IROFS will be used. These guidelines require the identification of each support system and component necessary to ensure the IROFS is capable of performing its specified safety function.
- IROFS will be designed, constructed, tested and maintained to QA Levels in accordance with the QAPD. IROFS will comply with design requirements established by the ISA and the applicable codes and standards (current approved version at the time of design). IROFS components and their designs will be of proven technology for their intended application. These IROFS components and systems will be qualified to perform their required safety functions under normal and accident conditions, e.g., pressure, temperature, humidity, seismic motion, electromagnetic interference, and radio-frequency interference, as required by the ISA. IROFS components and systems will be qualified using the applicable guidance in Institute of Electrical and Electronics Engineers (IEEE) standard IEEE-323, 1983, "IEEE Standard for Qualifying Class 1 E Equipment for Nuclear Power Generating Stations" (IEEE, 1983a). Furthermore, IROFS components and systems will be designed, procured, installed, tested, and maintained using the applicable guidance in Regulatory Guide 1.180, "Guidelines for Evaluating Electromagnetic and Radio-Frequency Interference in Safety-Related Instrumentation and Control Systems," Revision 1, dated October 2003 (NRC, 2003c). IROFS systems will be designed and maintained consistent with the reliability assumptions in the ISA. Redundant IROFS systems will be separate and independent from each other. IROFS systems will be designed to be fail-safe. In addition, IROFS systems will be designed such that process control system failures will not affect the ability of the IROFS systems to perform their required safety functions. Installation of IROFS systems will be in accordance with engineering specifications and manufacturer's recommendations. Required testing and calibration of IROFS will be consistent with the assumptions of the ISA and setpoint calculations, as applicable. For hardware IROFS involving instrumentation which provides automatic prevention or mitigation of events, setpoint calculations are performed in accordance with a setpoint methodology, which is consistent with the applicable guidance provided in Regulatory Guide 1.105, "Setpoints for Safety-Related Instrumentation," Revision 3, dated December 1999 (NRC, 1999).
- For IROFS that use software, firmware, microcode, programmable logic controllers, and/or any digital device, including hardware devices which implement data communication protocols (such as fieldbus devices and Local Area Network controllers), etc., design will adhere to accepted best practices in software and hardware engineering, including software quality assurance controls as discussed in the QAPD throughout the development process and the applicable guidance of the following industry standards and regulatory guides:

  a. American Society of Mechanical Engineers (ASME) NQA-1-1994, Part II, subpart Part 2.7, “Quality Assurance Requirements of Computer Software for Nuclear Facility Applications,” as revised by NQA-1a-1995 Addenda of NQA-1-1994 and ASME NQA-1-1994, Part 1, Supplement 11S-2, “Supplementary Requirements of Computer Program Testing.” (ASME, 1994a) (ASME, 1995) (ASME, 1994b)

b. Electric Power and Research Institute (EPRI) NP-5652, “Guideline for the Utilization of Commercial Grade Items in Nuclear Safety Grade Applications,” June 1988 (EPRI, 1988).

c. EPRI Topical Report (TR) -102323, “Guidelines for Electromagnetic Interference Testing in Power Plants,” Revision 1, December 1996 (EPRI, 1996a).

d. EPRI TR-106439, “Guideline on Evaluation and Acceptance of Commercial Grade Digital Equipment for Nuclear Safety Applications,” October 1996 (EPRI, 1996b).

e. Regulatory Guide 1.152, “Criteria for Digital Computers in Safety Systems in Nuclear Power Plants,” Revision 2, January 2006 (NRC, 2006).

f. Regulatory Guide 1.168, Revision 1, “Verification, Validation, Reviews, and Audits for Digital Software Used in Safety Systems of Nuclear Power Plants,” October, 2004 (NRC, 2004b).

g. Regulatory Guide 1.169, “Configuration Management Plans for Digital Computer Software Used in Safety Systems of Nuclear Power Plants,” September 1997 (NRC, 1997a).

h. Regulatory Guide 1.170, “Software Test Documentation for Digital Computer Software Used in Safety Systems of Nuclear Power Plants,” September 1997 (NRC, 1997b).

i. Regulatory Guide 1.172, “Software Requirements Specifications for Digital Computer Software Used in Safety Systems of Nuclear Power Plants,” September 1997 (NRC, 1997c).

j. Regulatory Guide 1.173, “Developing Software Life Cycle Processes for Digital Computer Software Used in Safety Systems for Nuclear Power Plants,” September 1997 (NRC, 1997d).

- For those IROFS requiring operator actions, a human factors engineering review of the human-system interfaces shall be conducted using the applicable guidance in NUREG-0700, "Human-System Interface Design Review Guidelines," Revision 2, dated May 2002 (NRC, 2002a), and NUREG-0711, "Human Factors Engineering Program Review Model," Revision 2, dated February 2004 (NRC, 2004a).
- For IROFS and IROFS with Enhanced Failure Probability Index Numbers (i.e., enhanced IROFS) that require "independent verification" of a safety function, the independent verification shall be independent with respect to personnel and personnel interface. Specifically, a second qualified individual, operating independently (e.g., not at the same time or not at the same location) of the individual assigned the responsibility to perform the required task, shall, as applicable, verify that the required task (i.e., safety function) has been performed correctly (e.g., verify a condition), or re-perform the task (i.e., safety function), and confirm acceptable results before additional action(s) can be taken which potentially negatively impact the safety function of the IROFS. The required task and independent verification shall be implemented by procedure and documented by initials or signatures of the individuals responsible for each task. In addition, the individuals performing the tasks shall be qualified to perform, for the particular system or process (as applicable) involved, the tasks required and shall possess operating knowledge of the particular system

or process (as applicable) involved and its relationship to facility safety. The requirements for independent verification are consistent with the applicable guidance provided in ANSI/ANS-3.2-1994 (ANSI, 1994).

- The following information related to IROFS will be available on-site in the ISA documentation once final design is completed.
  - Hardware IROFS design details, such as system schematics and/or descriptive lists, sufficient to determine the structures, system, equipment or component included within the hardware IROFS' boundary
  - Identification of essential utilities and support systems on which the IROFS depends to perform the intended safety functions
  - Operating ranges and limits for measured process variables, e.g., temperature, pressure, associated with IROFS
  - Basis for establishing the average vulnerable outage time to maintain acceptable IROFS availability
  - Safety limits and safety margins, as applicable.

3.3.2 Seismic Design

- To define the design basis earthquake (DBE) for the buildings assumed to withstand seismic events in the ISA, information from ASCE 43-05, Standard Seismic Design Criteria (ASCE, 2005b) was considered along with the results of the seismic portion of the ISA and the site-specific probabilistic seismic hazard analysis performed for the EREF site.

  The ASCE standard outlines a methodology to demonstrate compliance to a target performance goal of 1.0E-05 annual probability by designing to a seismic hazard of 1.0E-04 annual probability. The difference between the design level and the performance target is accounted for in the detailed design process by confirmatory calculations.

  Based on these approaches, the DBE for the EREF buildings assumed to withstand seismic events in the ISA has been selected as the 10,000-year (1.0E-04 mean annual probability) earthquake. For the EREF, following the ASCE approach provides a risk reduction ratio of design to target performance of 10 (1.0E-04/1.0E-05). This DBE for the buildings will be used in the detailed design process to demonstrate compliance with the overall ISA performance requirements. This will be accomplished by confirmatory seismic performance calculations for the seismic Items Relied on for Safety (IROFS) during detailed design. The ASCE standard addresses design and evaluation of structures, systems, and components (SSCs). The equivalents of SSCs for the EREF are considered to be the IROFS and the items that may affect the function of IROFS. The objective of the EREF seismic design approach is to demonstrate that use of this DBE for the buildings achieves a likelihood of unacceptable performance of less than approximately 1.0E-05 per year, by introducing sufficient design safety margins, i.e., conservatism, during the design process to allow for demonstration of compliance to the target performance goal. The ASCE standard implements this objective with the end result of demonstrating compliance to the target performance goal.

  The ASCE approach is based on achieving the target performance goal annual frequencies by incorporating sufficient conservatism in the seismic demand and structural capacity evaluations to achieve both of the following:

- Less than about a 1% probability of unacceptable performance for the DBE ground motion
- Less than a 10% probability of unacceptable performance for a ground motion equal to 150% of the DBE ground motion

The ASCE method is based on achieving both of the above probability goals, which represent two points on the underlying fragility curve. Meeting these two probability goals allows the target performance probabilities to be achieved with less possibility of non-conservatism. The resulting nominal factors of safety against conditional probability of failure are 1.0 and 1.5, respectively, for the above two goals.

The actual seismic design detailed approach for EREF will be based on the ASCE method. The safety margins will be representative of those discussed above and described in more detail in the ASCE standard.

The difference between the mean annual probabilities for design (1.0E-04) and performance (1.0E-05) is achieved through conservatism in the design (factors of safety), elasticity in the structures, and conservatism in the evaluation of the design.

- To define the design basis earthquake for the UF_6 process piping and systems assumed to withstand seismic events in the ISA information from ASCE 43-05 (ASCE, 2005b) was also used to define the appropriate DBE.

  The design basis earthquake (DBE) for the process piping and systems assumed to withstand seismic events in the ISA has been selected as the 2,500-yr (4.0E-4 mean annual probability) earthquake. This DBE for the UF_6 process piping and systems will be used in the detailed design process to demonstrate compliance with the overall ISA performance requirements. This will be accomplished by confirmatory seismic performance calculations for the seismic process piping and systems IROFS during detailed process piping and system design. The objective will be to demonstrate that use of this DBE for the UF_6 process piping and systems will achieve a likelihood of unacceptable performance of less than approximately 1.0E-4 per year. The difference between the mean annual probabilities for design (4.0E-4) and performance (1.0E-4) is achieved through conservatism in the design (factors of safety), elasticity in the systems, and conservatism in the evaluation of the design. Use of this approach will result in an “unlikely” event likelihood for exceeding the seismic capacity of the UF6 process piping and systems. The design response spectra for the buildings, horizontal and vertical, are based on the 10,000-year uniform hazard response spectra described in the ISA Summary. The bedrock amplification factors described in the ISA Summary will be verified during the detailed design phase of the EREF project.

- The design response spectra for the UF_6 process piping and equipment, horizontal and vertical, are based on the 2,500-year uniform hazard response spectra. The bedrock amplification factors described in the ISA Summary will be verified during the detailed design phase of the EREF project. Complete details of the seismic evaluation are provided in Appendix F. The 2,500-year response spectra will be developed during detailed design using the same approach as the 10,000 year.

- As a result of the additional site subsurface investigation to be conducted to support the final design of the EREF, if a potential for soil liquefaction is determined to exists, an assessment of soil liquefaction potential will be performed using the applicable guidance of Regulatory Guide 1.198, Procedures and Criteria for Assessing Seismic Soil Liquefaction at Nuclear Power Plant Sites (NRC, 2003a).

3.3.3 Building Requirements

- To support the final design of the EREF, additional soil borings and rock coring will be performed at the EREF site. Laboratory testing of soil and rock samples and additional in-situ tests will be performed as necessary to determine static and dynamic soil and rock properties. This information will be used to evaluate foundation bearing capacity, estimated settlement and provide geotechnical input for soil/rock structure interaction analysis.
- Allowable bearing pressures will be determined for the proposed foundations and anticipated loading. Allowable bearing pressure for the stability of structures will be based on the strength of the underlying soil and rock. For structures founded on rock the allowable bearing capacity is expected to be much higher than the loads that will be applied. The methods used to determine allowable bearing pressure will follow applicable methods in one or more of the following publications: Naval Facilities Engineering Command Design Manual (NAVFAC) DM-7.02, Foundations and Earth Structures (NAVFAC, 1986a); Foundation Engineering Handbook (Winterkorn, 1975); Foundation Analysis and Design (Bowles, 1996); Foundation Engineering (Peck, 1974); and Rock Foundations (ASCE, 1996).
- Settlement evaluation will consider the manufacturers and or other specified allowable total and differential settlement of equipment and buildings. The methods used will follow applicable methods in one or more of the following publications: NAVFAC DM-7.01, Soil Mechanics (NAVFAC, 1986b); Foundation Engineering Handbook (Winterkorn and Fang, 1975); Foundation Analysis and Design (Bowles, 1996); and Foundation Engineering (Peck, 1974).
- The SBMs are designed to meet the construction type, occupancy and exiting requirements of the IBC (ICC, 2006).
- Load bearing walls, columns, floors, and roof construction of the SBMs will have a fire-resistance rating consistent with Type I-B requirements.
- The seismic isolator slab, as part of the building envelope, cannot lead to an unacceptable release of UF_6 during or after an earthquake, up to the DBE for the buildings. Therefore, the seismic isolator slab performance is included as part of the building IROFS for seismic, and the following requirements are imposed on the seismic isolator slab:
    - Maintain support for flomels, cascades and other equipment or components containing UF_6 that are supported by the seismic isolator slab during and after a seismic event.
    - Maximum displacements of the seismic isolator slab during a seismic event must not lead to adverse impacts on adjacent building walls or other equipment or components containing UF_6.
- Each Separations Building Module superstructure is structurally independent from the rest of the facility and is designed to resist the normal load conditions as defined by the IBC (ICC, 2006) and the Extreme Environmental loads as defined by the ISA Summary.
- The floors of the Cascade Halls have a floor profile quality classification of flat in accordance with ACI 117-90 (ACI, 1990) to aid in the transport of assembled centrifuges.
- The TSB is designed to meet the construction type, occupancy and exiting requirements of the IBC (ICC, 2006).
- Load bearing walls, columns, floors, and roof construction of the TSB will have a fire-resistance rating consistent with Type I-B requirements.

- The TSB portion of the structure is designed to resist the normal load conditions as defined by the IBC (ICC, 2006) and the Extreme Environmental loads as defined by the ISA Summary.
- The OSB is designed to meet the occupant and exiting requirements and the construction Type I-B classifications set by the IBC (ICC, 2006).
- Load bearing walls, columns, floors, and roof construction of the OSB will have a fire-resistance rating consistent with Type I-B requirements.
- The OSB portion of the structure is designed to resist normal loads conditions as defined by the IBC (ICC, 2006) and does not need to resist Extreme Environmental Loads, but it is designed such that Extreme Environmental Loads acting on the OSB will not adversely affect the TSB.
- The CRSB is a single-story structure designed to meet the construction type, occupancy and exiting requirements of the IBC (ICC, 2006).
- Load bearing walls, columns, and roof construction of the CRSB will have a fire-resistance rating consistent with Type I-B requirements.
- The CRSB superstructure is designed to resist the normal load conditions as defined by the IBC (ICC, 2006) and the Extreme Environmental Loads defined by the ISA Summary.
- The CAB is designed to meet the construction type, occupancy and exiting requirements of the IBC (ICC, 2006).
- The CAB superstructure is designed to resist the normal load conditions as defined by the IBC (ICC, 2006). This building does not need to resist Extreme Environmental loads as defined by the ISA Summary.
- The BSPB is designed to meet the construction type, occupancy and exiting requirements of the IBC (ICC, 2006).
- Load bearing walls, columns, floors, and roof construction of the BSPB will have a fire-resistance rating consistent with Type I-B requirements.
- The Blending, Sampling, Preparation Building superstructure is designed to resist the normal load conditions as defined by the IBC (IBC, 2006) and the Extreme Environmental Loads as defined by the ISA Summary.
- The Full Tails, Full Feed, Empty Cylinder Storage Pads, the Full Product Cylinder Storage Pad, and the Cylinder Overpack Storage Pad are designed to resist the normal load conditions as defined by the IBC (ICC, 2006).
- The Electrical Services Building is designed to meet the construction type, occupance and exiting requirements of the IBC (ICC, 2006).
- The Electrical Services Building superstructure is designed to resist the normal load conditions as defined by the IBC (ICC, 2006), using structural steel framing.
- The Electrical Services Building for the Centrifuge Assembly Building is designed to meet the construction type, occupancy and exiting requirements of the IBC (ICC, 2006).
- The Electrical Services Building for the Centrifuge Assembly Building superstructure is designed to resist the normal load conditions as defined by the IBC (ICC, 2006) using structural steel framing.

- The Gasoline and Diesel Fueling Station is designed to meet the construction type, occupancy, and exiting requirements of the IBC (ICC, 2006).
- The Gasoline and Diesel Fueling Station is designed to resist the normal load conditions as defined by the IBC (ICC, 2006) using structural steel framing.
- The two Mechanical Services Buildings are designed to meet the construction type, occupancy and exiting requirements of the IBC (ICC, 2006).
- Each Mechanical Services Building structure is designed to resist the normal load conditions as defined by the IBC (ICC, 2006), using structural steel framing.
- The Administration Building is designed to meet the construction type, occupancy and exiting requirements of the IBC (ICC, 2006).
- The Administration Building superstructure is designed to resist normal load conditions as defined by the IBC (ICC, 2006), using structural steel framing.
- The Security and Secure Administration Building is designed to meet the construction type, occupancy and exiting requirements of the IBC (ICC, 2006).
- The Security and Secure Administration Building structure is designed to resist normal load conditions as defined by the IBC (ICC, 2006), using structural steel framing.
- The Guard House is designed to meet the occupancy and exiting requirements set by the IBC (ICC, 2006).
- The Guard House structure is designed to resist normal load conditions as defined by the International Building Code (ICC, 2006), using structural steel framing.
- The Visitor Center will be a commercial building constructed to the provisions of the local building code.

3.3.4 Structural Design Criteria

- As part of the Integrated Safety Analysis for external events, the following structures (buildings and areas) were determined to be required to withstand the design basis natural phenomena hazards and external hazards defined in the ISA Summary:
  - Separations Building Modules (UF_6 handling area, process service corridors, and cascade halls including the link corridors, electrical support rooms and second floor mechanical rooms)
  - BSPB
  - Cylinder Receipt and Shipping Building
  - TSB
- The above structures shall be designed to withstand the effects of external events (i.e., seismic, winds, snow, and local intense precipitation).
- The determination of normal wind pressure loadings and the design for wind loads for all structures and structural components exposed to wind are based on the requirements of the IBC (ICC, 2006), Section 1609 which further refers to the wind design requirements of ASCE 7-05, Chapter 6.0 (ASCE, 2005a).
- The structures and components listed above exposed to wind are designed to withstand the Extreme Environmental wind as defined in the ISA Summary Section.

- Protection against flooding is provided by establishing the facility floor level at 0.15 m (0.5 ft) above the high point of the finished grade elevation and all roads are set below this. At roof access doors, the door threshold is set at least 0.15 m (0.5 ft) above the top of the roofing material.
- All buildings and structures, including such items as equipment supports, are designed to withstand the earthquake loads defined in Section 1613 of the IBC (ICC, 2006) which invokes the earthquake design requirements of ASCE 7-05 (ASCE, 2005a). Every structure is designed to resist the total lateral seismic forces applied in the directions which will produce the most critical load effects as delineated in Section 12.5 of ASCE 7-05 (ASCE, 2005a). The seismic analysis shall consist of one of the types permitted by Table 12.6-1 in ASCE 7-05 (ASCE, 2005a), based on the structure's seismic design category, structural system, dynamic properties, and regularity. The permitted analytical procedures include Equivalent Lateral Force Analysis, Modal Response Spectrum Analysis, and Seismic Response History Procedures.

  The provisions in AISC 341-05 (AISC, 2005b) govern the design fabrication, and erection of structural steel members and connections in the seismic load resisting system (SLRS) and splices in columns that are not a part of the SLRS, in buildings and other structures, where the seismic response modification coefficient, R, (as specified in ASCE 7-05 (ASCE, 2005a)) is taken greater than 3, regardless of the seismic design category.
- The Design Basis Earthquake (DBE) for the EREF site will be determined using the methods in ASCE 43-05 (ASCE, 2005b). The peak accelerations will be determined during detail design. The design spectra will be based on the building construction type in accordance with Limit State C of ASCE 43-05 (ASCE, 2005b). For licensing purposes, soil amplification factors are based on Soil Class C. This assumption will be verified during final design.
- Normal Snow Loads (S) on roofs and other exposed surfaces for all structures including snow drifts, sliding snow, unbalanced snow, and rain on snow loads, are determined in accordance with the IBC (ICC, 2006), Section 1603 which invokes the snow load design requirements in Chapter 7 of ASCE 7-05 (ASCE, 2005a).
- Extreme Environmental Snow Loads on roofs of buildings listed above is based on a Ground Snow Load (p_g) of 309 kg/m^2 (63.2 lb/ft^2).
- The roof drainage systems (including secondary roof drainage path) will be designed such that the amount of rainfall that can collect on the roof does not exceed the design load for the roof.
- Roofs will be designed so as to not pond water to a depth during the extreme local precipitation that could exceed the Extreme Environmental Rainfall which is equivalent to the 24-hour extreme local precipitation estimate of 112 mm (4.39 in).
- The following features apply to the SBM, TSB, CRSB and BSPB:
  - Since the sloped roof design precludes any significant ponding on the roofs, any leaks into the building through the roof liner would not be significant due to small hydrostatic driving heads of any water on the roof. The layouts in the SBMs, CRSB and BSPB are very open designs which would result in significant spreading out any precipitation leaking into the buildings. The layout in the TSB provides for smaller rooms spread over three floors. The individual rooms are interconnected through many doors. Any leaks into the building through the roof liner would disperse from room to room and floor to floor without any significant ponding in any of the individual rooms.

- The facility floor levels will be set 0.15 m (6 in) above the finished outside adjacent grade. Finished grading will slope away from buildings preventing any accumulations/ponding of precipitation from roof run-off or sheet flow of storm water against the buildings. At roof access doors, the door threshold is set at least 0.15 m (6 in) above the top of the roofing material.

- The Full Feed Cylinder Storage Pads, Full Tails Cylinder Storage Pads, and Full Product Cylinder Storage Pad are designed to drain excess precipitation, thereby precluding any significant ponding due to extreme precipitation.
- Load combinations for concrete structures are based on ASCE 7-05 (ASCE, 2005a) and ACI 318-05 (ACI, 2005a). Additional load combinations for concrete structures listed above are based on ACI 349-06 (ACI, 2006).
- All concrete structures are designed using ACI Strength Design Methods: ACI 349-06 (ACI, 2006) for concrete structures and components listed above and ACI 318-05 (ACI, 2005a) for all other concrete structures.
- Load combinations for steel structures for all buildings are based on ASCE 7-05 (ASCE, 2005a). Additional load combinations applicable to steel structures and components listed above are based on AISC N690-06 (AISC, 2006).
- All structural steel is designed using the AISC Methods (ADS or LRFD) provided in AISC 360-05 (AISC, 2005a). Structural steel for structures listed above is designed using the AISC Methods (ADS or LRFD) provided in AISC N690-06 (AISC, 2006).
- Load combinations for masonry walls are based on ASCE 7-05 (ASCE, 2005a) and ACI 530-05 (ACI, 2005b).
- Masonry walls are designed using either the Allowable Stress Method or Strength Design Method in ACI 530-05 (ACI, 2005b).
- The allowable bearing pressure will be based on allowable settlement of equipment and building.

3.3.5 Codes and Standards for Structural Design

The following codes and standards are generally applicable to the structural design of the EREF:

- International Building Code (ICC, 2006)
- ASCE 7-05, Minimum Design Loads for Buildings and Other Structures (ASCE, 2005a)
- ASCE 43-05, Seismic Design Criteria for Structures, Systems, and Components in Nuclear Facilities (ASCE, 2005b)
- ACI 318-05, Building Code Requirements for Structural Concrete (ACI, 2005a)
- ACI 349-06, Code Requirements for Nuclear Safety Related Concrete Structures (ACI, 2006)
- ACI 530-05/ASCE 5-05/TMS 402-05, Building Code Requirements for Masonry Structures (ACI, 2005b)
- AISC Steel Construction Manual, Thirteenth Edition including ANSI/AISC 360-05, Specification for Structural Steel Buildings (AISC, 2005a)

- AISC Seismic Design Manual, including ANSI/AISC 341-05, Seismic Provisions for Structural Steel Buildings (AISC, 2005b)
- ANSI/AISC N690-06, Specification for Safety-Related Steel Structures for Nuclear Facilities (AISC, 2006)
- PCI Design Handbook, Sixth Edition (PCI, 2004).

3.3.6 Process Systems Requirements

- The autoclave is designed to sustain seismic loading without a loss of integrity. The autoclave is held in place by anti-drop devices, the design of the "screw-nut" devices, pivots and rollers. In addition to the process components and other interior support equipment (e.g., walkways and bridges) are secured to ensure they do not become displaced and cause damage.
- The autoclave pressure vessel is designed and fabricated in accordance with the requirements of ASME, Section VIII, Division I (current edition at the time of autoclave manufacture), with the exception that the pressure relief devices specified in Section UG-125 through 137 are not provided due to the potential for release of hazardous material to the environment through a pressure relief device. Instead, two independent and diverse automatic trips of the autoclave heaters and fan motor are provided to eliminate the heat input and preclude approaching the autoclave design pressure.
- The Separations Building GEVS provides for continuous monitoring and period sampling of the gaseous effluent in the exhaust duct in accordance with the guidance in Regulatory Guide 4.16 (NRC, 1985).
- The Separations Building GEVS is designed to meet all applicable NRC requirements for public and plant personnel safety and effluent control and monitoring. The system designs also comply with applicable standards of OSHA, EPA, and state and local agencies.
- The design and in-place testing of the Separations Building GEVS will be consistent with the applicable guidance in Regulatory Guide 1.140 (NRC, 2001b), ASME AG-1-1997 (ASME, 1997), and ASME N510-1989 (ASME, 1989). The system includes potassium carbonate impregnated activated carbon filters for HF removal. As such, the portions of Regulatory Guide 1.140 (NRC, 2001b), ASME AG-1-1997 (ASME, 1997), and ASME N510-1989 (ASME, 1989), which address activated carbon filters for radioiodine removal are not applicable. The prefilter efficiency (65%) is based on testing in accordance with ASME AG-1-1997 (ASME, 1997). The HEPA filter efficiency (99.97%) is based on removal of 0.3 micron particles when tested in accordance with ASME-AG-1 (ASME, 1997). The impregnated carbon filter efficiency (99%) for removal of HF is based on measurement of HF concentration upstream and downstream of the carbon filter. In-place testing and inspections of the filters will be performed in accordance with the guidance in Regulatory Guidance 1.140 (NRC, 2001b). The frequency for performance of in-place filter testing and the acceptance criteria for penetration and leakage (or bypass) will be consistent with the guidance in Regulatory Guide 1.140 (NRC, 2001b). Qualification testing, to verify HF removal efficiency, of the impregnated carbon will be performed using ASTM D6646-03 (ASTM, 2003), modified to reflect removal of HF instead of hydrogen sulfide. Laboratory testing of the impregnated carbon filter of carbon samples will be performed on an annual basis. Throughout the useful life of the impregnated carbon, the impregnate is progressively consumed. The laboratory testing will determine the impregnant content within the sample.

The amount of impregnant present in the sample is indicative of the remaining life of carbon filter for removal of HF.

- The TSB GEVS is designed to meet all applicable NRC requirements for public and plant personnel safety and effluent control and monitoring. The system design also complies with applicable standards of OSHA, EPA, and state and local agencies.
- The TSB GEVS provides for continuous monitoring and periodic sampling of the gaseous effluent in the exhaust vent in accordance with the guidance in Regulatory Guide 4.16 (NRC, 1985).
- The design and in-place testing of the TSB GEVS will be consistent with the applicable guidance in Regulatory Guide 1.140 (NRC, 2001b), ASME AG-1-1997 (ASME, 1997), and ASME N510-1989 (ASME, 1989). The system includes a potassium carbonate impregnated activated carbon filter for HF removal. As such, the portions of Regulatory Guide 1.140 (NRC, 2001b), ASME AG-1-1997(ASME, 1997), and ASME N510-1989 (ASME, 1989), which address activated carbon filters for radioiodine removal are not applicable. The prefilter efficiency (65%) is based on testing in accordance with ASME AG-1-1997 (ASME. 1997). The HEPA filter efficiency (99.97%) is based on removal of 0.3 micron particles when tested in accordance with ASME-AG-1 (ASME, 1997). The impregnated carbon filter efficiency (99%) for removal of HF is based on measurement of HF concentration upstream and downstream of the carbon filter. In-place testing and inspections of the filters will be performed in accordance with the guidance in Regulatory Guidance 1.140 (NRC, 2001b). The frequency for performance of in-place filter testing and the acceptance criteria for penetration and leakage (or bypass) will be consistent with the guidance in Regulatory Guide 1.140 (NRC, 2001b). Qualification testing, to verify HF removal efficiency, of the impregnated carbon will be performed using ASTM D6646-03 (ASTM, 2003), modified to reflect removal of HF instead of hydrogen sulfide. Laboratory testing of the impregnated carbon filter of carbon samples will be performed on an annual basis. Throughout the useful life of the impregnated carbon, the impregnate is progressively consumed. The laboratory testing will determine the impregnant content within the sample. The amount of impregnant present in the sample is indicative of the remaining life of carbon bed for removal of HF.
- The Centrifuge Test and Post Mortem Facilities Exhaust Filtration System provides for continuous monitoring and periodic sampling of the gaseous effluent in the exhaust vent in accordance with the guidance in Regulatory Guide 4.16 (NRC, 1985).
- The design and in-place testing of the Centrifuge Test and Post Mortem Facilities Exhaust Filtration System will be consistent with the applicable guidance in Regulatory Guide 1.140 (NRC, 2001b), ASME AG-1-1997 (ASME, 1997), and ASME N510-1989 (ASME, 1989). The system includes a potassium carbonate impregnated activated carbon filter for HF removal. As such, the portions of Regulatory Guide 1.140 (NRC, 2001b), ASME AG-1-1997 (ASME, 1997), and ASME N510-1989 (ASME, 1989), which address activated carbon filters for radioiodine removal are not applicable. The prefilter efficiency (85%) is based on testing in accordance with ASME AG-1-1997 (ASME, 1997). The HEPA filter efficiency (99.97%) is based on removal of 0.3 micron particles when tested in accordance with ASME-AG-1-1997 (ASME, 1997). The impregnated carbon filter efficiency (99%) for removal of HF is based on measurement of HF concentration upstream and downstream of the carbon filter. In-place testing and inspections of the filters will be performed in accordance with the guidance in Regulatory Guidance 1.140 (NRC, 2001b). The frequency for performance of in-place filter testing and the acceptance criteria for penetration and leakage (or bypass) will be consistent with the guidance in Regulatory Guide 1.140 (NRC, 2001b). Qualification testing, to verify HF removal efficiency, of the impregnated carbon will be performed using ASTM

D6646-03 (ASTM, 2003), modified to reflect removal of HF instead of hydrogen sulfide. Laboratory testing of the impregnated carbon filter of carbon samples will be performed on an annual basis. Throughout the useful life of the impregnated carbon, the impregnate is progressively consumed. The laboratory testing will determine the impregnant content within the sample. The amount of impregnant present in the sample is indicative of the remaining life of carbon filter for removal of HF.

- The design and in-place testing of the Centrifuge Test and Post Mortem Facilities GEVS will be consistent with the applicable guidance in Regulatory Guide 1.140 (NRC, 2001b), ASME AG-1-1997 (ASME, 1997), and ASME N510-1989 (ASME, 1989). The system includes potassium carbonate impregnated activated carbon filters for HF removal. As such, the portions of Regulatory Guide 1.140 (NRC, 2001b), ASME AG-1-1997 (ASME, 1997), and ASME N510-1989 (ASME, 1989), which address activated carbon filters for radioiodine removal are not applicable. The prefilter efficiency (65%) is based on testing in accordance with ASME AG-1-1997 (ASME, 1997). The HEPA filter efficiency (99.97%) is based on removal of 0.3 micron particles when tested in accordance with ASME-AG-1-1997 (ASME, 1997). The impregnated carbon filter efficiency (99%) for removal of HF is based on measurement of HF concentration upstream and downstream of the carbon filter. In-place testing and inspections of the filters will be performed in accordance with the guidance in Regulatory Guidance 1.140 (NRC, 2001b). The frequency for performance of in-place filter testing and the acceptance criteria for penetration and leakage (or bypass) will be consistent with the guidance in Regulatory Guide 1.140 (NRC, 2001b). Qualification testing, to verify HF removal efficiency, of the impregnated carbon will be performed using ASTM D6646-03 (ASTM, 2003), modified to reflect removal of HF instead of hydrogen sulfide. Laboratory testing of the impregnated carbon filter of carbon samples will be performed on an annual basis. Throughout the useful life of the impregnated carbon, the impregnate is progressively consumed. The laboratory testing will determine the impregnant content within the sample. The amount of impregnant present in the sample is indicative of the remaining life of carbon filter for removal of HF.
- In response to Bulletin 2003-03 (NRC, 2003b), AES will not purchase UF_6 cylinders with the 1-in Hunt valves installed nor purchase any replacement 1-in valves from Hunt. In the unlikely event that any cylinders are received at the EREF with the 1-in Hunt valves installed, the following actions will be taken.
  - If the cylinder is empty, the valve will be replaced before the cylinder is used in the facility.
  - If the cylinder is filled, a safety justification to support continued use of the cylinder until the valve can be replaced will be developed or the valve will be replaced in accordance with EREF procedures.

  No cylinders with the 1-in Hunt valve installed will be used as depleted uranium tails cylinders.
- Cylinders are pressure tested using compressed nitrogen in accordance with ANSI N14.1-2001 (ANSI, 2001). This system is used for testing new and decontaminated empty cylinders only.
- For cylinders containing heels, the cylinder pressure and temperature complies with ASTM C-996-04 (ASTM, 2004) prior to use as a product cylinder.

3.3.7 Utility and Support Systems Requirements

- The applicable codes and standards for the Cylinder Evacuation System are reflected in Table 3.3-9.
- The applicable codes and standards for utility and support systems, except for the portions of the Cylinder Preparation Systems addressed in Table 3.3-9, are reflected in Table 3.3-10.
- Exhaust flow from the potentially contaminated rooms (i.e., Decontamination Workshop, Chemical Trap workshop, Mobile Unit Disassembly & Reassembly Workshop, Valve & Pump Dismantling Workshop and Maintenance Facility) of the TSB is filtered by a pre-filter, HEPA filter, activated carbon filter and HEPA filter and is then released through an exhaust vent. The exhaust flow is continuously monitored for alpha and HF. The exhaust air is periodically sampled. The continuous monitoring and periodic sampling is in accordance with the guidance in Regulatory Guide 4.16 (NRC, 1985).
- The Electrical System design complies with the following codes and standards:
  - IEEE C2-2007, National Electrical Safety Code (IEEE, 2007a)
  - NFPA 70, National Electric Code (NFPA, 2008)
  - NFPA 70E, Standard for Electrical Safety Requirements for Employee workplaces (NFPA, 2004)
  - IEEE 80-2007, Guide for Safety in AC Substation Grounding (IEEE, 2000)
  - IEEE 81-1983, Guide for Measuring Earth Resistivity, Ground Impedance, and Earth Surface Potential of a Ground System (IEEE, 1983b)
  - IEEE 142-2007, Grounding of Industrial and Commercial Power Systems (IEEE, 2007b)
- On a loss of electrical power, the systems associated with items relied on for safety (IROFS) will be designed such that the safety function is maintained or the feature fails-safe.
- The potential for hydrogen accumulation and explosion will be evaluated as part of final design. The number of batteries, battery type, and charge rate information is required to determine hydrogen generation potential. Once this information is known, the ability of the room or area housing the batteries to develop an ignitable mixture of hydrogen will be evaluated and will identify appropriate features required to prevent or mitigate the effects of hydrogen ignition.
- The ventilation control of hydrogen gas will be provided in accordance with National Fire Protection Association (NFPA) 70E–2004, Standard for Electrical Safety in the Workplaces, (NFPA, 2004) and the Institute of Electrical and Electronics Engineers (IEEE) C2-2007, National Electrical Safety Code (IEEE, 2007a).
- Based on the current level of design, battery control systems have been identified for use by the 13.8 kV switchgear systems. The control system requirements for the 480/440 V switchgear have not been fully developed. This system will require further definition during detailed design to determine the control power scheme to be utilized.
- The Communication and Alarm Annunciation Systems Design complies with the following Codes and Standards:
  - NFPA 70 – 2008. National Electric Code (NFPA, 2008)
  - NFPA 72 – 2007. National Fire Alarm Code (NPFA, 2007)
  - 29 CFR Part 1910.7. Occupational Safety and Health Standards (CFR, 2008e)

- IEEE C2 – 2007. National Electric Safety Code (IEEE, 2007a)

- The criticality safety for tanks that are not Items Relied on For Safety (IROFS) will utilize two independent IROFS for mass control. The two are referred to as "sampled and analyzed," e.g., tank contents are sampled and analyzed before being transferred to another tank or out of the system. The "bookkeeping measures" is a process to calculate the potential mass of uranium in the tank for any batch operation to ensure that no tank holds more than a safe mass of uranium. This calculated mass of uranium is then compared to a mass limit, which is based on the double-batching limit on mass of uranium in a vessel from the criticality safety analyses. The "bookkeeping measures" process is described in further detail below.
  - For the EREF, the "bookkeeping measures" are only applied to tanks where the mass of uranium involved, even when double batching error is considered, is far below the safe value. Bookkeeping measures are a documented running inventory estimate of the total uranium mass in a particular tank. The mass inventory for each batch operation is calculated based on the mass of material to be transferred during each batch operation and the mass inventory in the tank prior to the addition of the material from the batch operation.

  - There are two types of batch operations that are considered. The first type is liquid transfer between tanks based on moving a volume of liquid with uranic material present in the volume. The second is transferring a number of components into the tank with the uranic material contained within or on the components transferred in each batch operation. For both types of operations, the initial mass inventory is set after emptying, cleaning, and readying the tank for receipt of uranic material. For each batch operation, the amount of uranic material to be transferred during a particular batch operation is estimated. This quantity of material is then credited/debited to/from each tank as appropriate. A new mass inventory in each tank is calculated. The calculated receiving tank mass inventory is compared to the mass limit for the tank prior to the transfer.

  - For the second type, a transfer of a number of facility components into an open tank during a batch operation, the mass inventory on/within the components is estimated, and that mass credited to the receiving tank. The final mass inventory in the tank is calculated and the total is compared to the mass limit for the tank prior to the transfer. Open tanks associated with this system are located in the Decontamination Workshop.

- The Liquid Effluent Collection and Treatment System process piping is designed in accordance with the applicable provisions of American Society of Mechanical Engineers, ASME B31, Standards of Pressure Piping, revision in effect at time of detailed design. To provide system integrity and prevent leaks, welded construction is used everywhere practical.

- All collection tanks are designed in accordance with American Water Works Association (AWWA), American Petroleum Institute (API), or ASME Standards.

- UF_6 cylinders with faulty valves are serviced in the Ventilated Room. In the Ventilated Room, the faulty valve is removed and the threaded connection in the cylinder is inspected. A new valve is installed in accordance with the requirements of ANSI N-14.1 (ANSI, 2001).

3.4 REFERENCES

ACI, 1990. Standard Specification for Tolerances for Concrete Construction and Materials, ACI 117-90, Reapproved 2002, American Concrete Institute, 1990.

ACI, 2005a. Building Code Requirements for Structural Concrete, ACI 318-05, American Concrete Institute, 2005.

ACI, 2005b. Building Code Requirements for Masonry Structures, ACI 530-05/ASCE 5-05/TMS 402-05, American Concrete Institute, American Society of Civil Engineers, and The Masonry Society, 2005.

ACI, 2006. Code Requirements for Nuclear Safety Related Concrete Structures, ACI 349-06, American Concrete Institute, 2006.

AISC, 2005a. Steel Construction Manual, including ANSI/AISC 360.05, Specification for Structural Steel Buildings, Thirteenth Edition, American Institute of Steel Construction, 2005.

AISC, 2005b. AISC Seismic Design Manual, including ANSI/AISC 341-05, Seismic Provisions for Structural Steel Buildings, American Institute of Steel Construction, 2005.

AISC, 2006. ANSI/AISC N690-06, Specification for Safety-Related Steel Structures for Nuclear Facilities, 2006.

ANSI, 1994. Administrative Controls and Quality Assurance for the Operational Phase of Nuclear Power Plants, ANSI/ANS-3.2-1994, American National Standards Institute, American Nuclear Society 1994.

ANSI, 2001. Uranium Hexafluoride - Packaging for Transport, ANSI N14.1 - 2001, American National Standards Institute, February 2001.

ASCE, 1996. U.S. Army Corps of Engineers Engineering Manual EM 1110-2-2908, Rock Foundations, Published with permission by the American Society of Civil Engineers, 1996.

ASCE, 2005a. Minimum Design Loads for Buildings and Other Structures, ASCE 7-05, American Society of Civil Engineers, 2005.

ASCE, 2005b. Seismic Design Criteria for Structures, Systems, and Components in Nuclear Facilities and Commentary, ASCE 43-05, American Society of Civil Engineers, 2005.

ASME, 1989. Testing of Nuclear Air Cleaning Systems, ASME N510-1989, American Society of Mechanical Engineers, 1989.

ASME, 1994a. Quality Assurance Program Requirements for Computer Software for Nuclear Facility Applications, NQA-1 – 1994, Part II, Subpart Part 2.7, American Society of Mechanical Engineers, 1994.

ASME, 1994b. Supplementary Requirements for Computer Program Testing, NQA-1, Part I, Supplement 11S-2, American Society of Mechanical Engineers, 1994.

ASME, 1995. Quality Assurance Requirements for Nuclear Facility Applications, ASME NQA-1a-1995, American Society of Mechanical Engineers, 1995.

ASME, 1997. Code on Nuclear Air and Gas Treatment, ASME AG-1-1997, American Society of Mechanical Engineers, 1997.

ASTM, 2003. Standard Test Method for Determination of the Accelerated Hydrogen Sulfide Breakthrough Capacity of Granular and Pelletized Activated Carbon, ASTM D6646-03, American Society for Testing and Materials, October 2003.

ASTM, 2004. Standard Specification for Uranium Hexafluoride Enriched to Less Than 5 % ^{235}U, ASTM C-996-04,American Society for Testing and Materials, 2004.

Bowles, 1996. Foundation Analysis and Design, J.A. Bowles, 1996.

CFR, 2008a. Title 10, Code of Federal Regulations, Section 70.65, Additional content of applications, 2008.

CFR, 2008b. Title 10, Code of Federal Regulations, Part 70, Domestic Licensing of Special Nuclear Material, 2008.

CFR, 2008c. Title 10, Code of Federal Regulations, Section 70.61, Performance requirements, 2008.

CFR, 2008d. Title 10, Code of Federal Regulations, Section 70.62, Safety Program and Integrated Safety Analysis, 2008.

CFR, 2008e. Title 29, Code of Federal Regulations, Section 1910, Occupational Safety and Health Standards, 2008.

CFR, 2008f. Title 10, Code of Federal Regulations, Section 70.72, Facility Changes and Change Process, 2008.

CFR, 2008g. Title 10, Code of Federal Regulations, Section 70.4, Definitions, 2008.

CFR, 2008h. Title 10, Code of Federal Regulations, Section 70.64, Requirements for new facilities or new processes at existing facilities, 2008.

ICC, 2006. International Building Code, Internal Code Council, Inc., 2006.

EGG, 1990. Generic Component Failure Data Base for Light Water and Liquid Sodium Reactor PRAs, EGG-SSRE-8875, EGG, February 1990.

EPRI, 1988. Electric Power Research Institute (EPRI) NP-5652, “Guideline for the Utilization of Commercial Grade Items in Nuclear Safety Grade Applications,” June 1988.

EPRI, 1996a. EPRI Topical Report (TR) -102323, “Guidelines for Electromagnetic Interference Testing in Power Plants,” Revision 1, December 1996.

EPRI, 1996b. EPRI TR-106439, “Guideline on Evaluation and Acceptance of Commercial Grade Digital Equipment for Nuclear Safety Applications,” October 1996.

IEEE, 1983a. Standard for Qualifying Class 1 E Equipment for Nuclear Power Generating Stations, IEEE-323, Institute of Electrical and Electronics Engineers, 2003.

IEEE, 1983b. IEEE 81, Guide for Measuring Earth Resistivity, Ground Impedance, and Earth Surface Potential of a Ground System, Institute of Electrical and Electronics Engineers, 1983.

IEEE, 1989. IEEE C37.90, IEEE Standard for Relays and Relay Systems Associated with Electric Power Apparatus, Institute for Electrical and Electronic Engineers, 1989.

IEEE, 1992. IEEE 519, Recommended Practices and Requirements for Harmonic Control in Electrical Power Systems, Institute for Electrical and Electronic Engineers, 1992.

IEEE, 1997. IEEE 485, Recommended Practice for Sizing Lead-Acid Batteries for Stationary Applications, Institute for Electrical and Electronic Engineers, 1997.

IEEE, 2000. IEEE 80, Guide for Safety in AC Substation Grounding, Institute of Electrical and Electronics Engineers, 2000.

IEEE, 2002. IEEE C37.90.1, IEEE Standard for Surge Withstand Capability (SWC) Tests for Relays and Relay Systems Associated with Electric Power Apparatus, 2002.

IEEE, 2002a. IEEE 450, Recommended Practice for Maintenance, Testing, and Replacement of Vented Lead-Acid Batteries for Stationary Applications, Institute for Electrical and Electronic Engineers, 2002.

IEEE, 2002b. IEEE 484, Recommended Practice for Installation Design and Installation of Vented Lead-Acid Batteries for Stationary Applications, Institute for Electrical and Electronic Engineers, 2002.

IEEE, 2004. IEEE 946, Recommended Practice for the Design of DC Auxiliary Power Systems for Generating Stations, Institute for Electrical and Electronic Engineers, 2004.

IEEE, 2007a. National Electrical Safety Code, IEEE C2-2007, Institute of Electrical and Electronics Engineers, 2007.

IEEE, 2007b. IEEE 142, Grounding of Industrial and Commercial Power Systems, Institute of Electrical and Electronics Engineers, 2007.

LES, 2005. Louisiana Energy Services (LES), National Enrichment Facility Safety Analysis Report, Revision 6, 2005.

NAVFAC, 1986a. Foundations and Earth Structures, NAVFAC DM-7.02, Naval Facilities Engineering Command Design Manual, 1986.

NAVFAC, 1986b. Soil Mechanics, NAVFAC DM-7.01, Naval Facilities Engineering Command Design Manual, 1986.

NFPA, 2004. Standard for Electrical Safety Requirements in the Workplace, NFPA 70E, National Fire Protection Association, 2004.

NFPA, 2007. National Fire Alarm Code, NFPA 72, National Fire Protection Association, 2007.

NFPA, 2008. National Electrical Code, NFPA 70, National Fire Protection Association, 2008.

NRC, 1983. Handbook of Human Reliability Analysis with Emphasis on Nuclear Power Plant Applications, Final Report, NUREG/CR-1278, U.S. Nuclear Regulatory Commission, August 1983.

NRC, 1985. Monitoring and Reporting Radioactivity in Releases of Radioactive Materials in Liquid and Gaseous Effluents from Nuclear Fuel Processing and Fabrication Plants and Uranium Hexafluoride Production Plants, Regulatory Guide 4.16, Revision 1, U.S. Nuclear Regulatory Commission, December 1985.

NRC, 1997a. Regulatory Guide 1.169, “Configuration Management Plans for Digital Computer Software Used in Safety Systems of Nuclear Power Plants,” September 1997.

NRC, 1997b. Regulatory Guide 1.170, “Software Test Documentation for Digital Computer Software Used in Safety Systems of Nuclear Power Plants,” September 1997.

NRC, 1997c. Regulatory Guide 1.172, “Software Requirements Specifications for Digital Computer Software Used in Safety Systems of Nuclear Power Plants,” September 1997.

NRC, 1997d. Regulatory Guide 1.173, “Developing Software Life Cycle Processes for Digital Computer Software Used in Safety Systems of Nuclear Power Plants,” September 1997.

NRC, 1999. Setpoints for Safety-Related Instrumentation, Regulatory Guide 1.105, U.S. Nuclear Regulatory Commission, Revision 3, December 1999.

NRC, 2001a. Integrated Safety Analysis Guidance Document, NUREG-1513, U.S. Nuclear Regulatory Commission, May 2001.

NRC, 2001b. Design, Inspection, and Testing Criteria for Air Filtration and Adsorption Units for Normal Atmosphere Cleanup Systems in Light-Water-Cooled Nuclear Power Plants, Regulatory Guide 1.140, Revision 2, U.S. Nuclear Regulatory Commission, June 2001.

NRC, 2002a. Standard Review Plan for the Review of a License Application for a Fuel Cycle Facility, NUREG-1520, U.S. Nuclear Regulatory Commission, March 2002.

NRC, 2003a. Procedures and Criteria for Assessing Seismic Soil Liquefaction at Nuclear Power Plant Sites, Regulatory Guide 1.198, U.S. Nuclear Regulatory Commission, November, 2003.

NRC, 2003b. Potentially Defective 1-Inch Valves for Uranium Hexafluoride Cylinders, NRC Bulletin 2003-03, U.S. Nuclear Regulatory Commission, August 2003.

NRC, 2003c. Guidelines for Evaluating Electromagnetic and Radio-Frequency Interference in Safety-Related Instrumentation and Control Systems, Regulatory Guide 1.180, U.S. Nuclear Regulatory Commission, Revision 1, October 2003.

NRC, 2004a. Human Factors Engineering Program Review Model, NUREG-0711, U.S. Nuclear Regulatory Commission, Revision 2, February 2004.

NRC, 2004b. Regulatory Guide 1.168, “Verification, Validation, Reviews, and Audits for Digital Software Used in Safety Systems of Nuclear Power Plants,” Revision 1, February 2004.

NRC, 2005. Safety Evaluation Report for the National Enrichment Facility in Lea County, New Mexico, NUREG-1827, U.S. Nuclear Regulatory Commission, June 2005.

NRC, 2006. Regulatory Guide 1.152, “Criteria for Digital Computers in Safety Systems in Nuclear Power Plants,” Revision 2, January 2006.

PCI, 2004. Precast Concrete Institute Design Handbook: Precast and Prestressed Concrete, Sixth Edition, Precast Concrete Institute, 2004.

Peck, 1974. Foundation Engineering, Second Edition, Ralph B. Peck, Walter E. Hanson, and Thomas H. Thornburn, Publisher John Wiley & Sons, 1974.

SRP, 1998. Savannah River Site Hazard Analysis Generic Initiator Database, WSRC-RP-95-915, June 11, 1998.

Winterkorn, 1975. Foundation Engineering Handbook, H.F. Winterkorn and H.Y. Fang, 1975.

TABLES

Table 3.1-1 HAZOP Guidewords
(Page 1 of 2)

Parameter/ Guide Word	More	Less	None	Reverse	As well as	Partly	Other Than
Flow	More Flow	Less Flow	No Flow	Reverse Flow	Deviating Concentration	Contam ination	Deviating Material
Pressure	More Pressure	Less Pressure	Vacuum		Delta-P		Explosion
Temperature	More Heat	Less Heat			Different Temperature		
Level	High Level	Low Level	No Level		Different Level		
Time	More Time/Too Late	Less Time/ Too Soon	Sequence Step Skipped		Missing Actions	Extra Actions	Wrong Time
Agitation	Fast Mixing	Slow Mixing	No Mixing				
Reaction	Fast Reaction/ runaway	Slow Reaction	No Reaction				Unwanted Reaction
Start-Up/ Shut-Down	Too Fast	Too Slow			Actions Missed		
Ruptured Pipe	Large Quantity in Pipe	Small Quantity in Pipe	Nothing in Pipe	Leakage into Ruptured Pipe			
Leaking Pipe	Fast Leak	Slow Leak		Leakage Into Pipe			
Leaking Cylinder	Fast Leak	Slow Leak		Leakage Into Cylinder			
Ruptured Cylinder	Large Quantity in Cylinder	Small Quantity in Cylinder	Nothing in Cylinder	Leakage into Ruptured Cylinder			
Geometry	More Criticality Favorable						
External Facility Fires							
Tornadoes							
Seismic Event							

Table 3.1-1 HAZOP Guidewords
(Page 2 of 2)

Parameter/ Guide Word	More	Less	None	Reverse	As well as	Partly	Other Than
Construction Activities							
Flooding							
Airplane Crash							
Snow/Ice							
Pipelines							
Local Intense Precipitation							
Volcano							
Off-Site Transportati on Related (tanker on public highway)							

Table 3.1-2 ISA HAZOP Table Sample Format
(Page 1 of 1)

Date:	Location:	Drawing No.	Rev.
Node # / Description:			

Guideword	Hazard	Causes	Consequences	Preventive Factors	Mitigative Factors	Comments / Actions

Table 3.1-3 Consequence Severity Categories Based on 10 CFR 70.61
(Page 1 of 1)

	Workers	Offsite Public	Environment
Category 3 **High Consequence**	Radiation Dose: RD > 1 Sievert (Sv) (100 rem) Chemical Dose: U: CD > AEGL-3 for UF_6 HF: CD > AEGL-3 for HF	Radiation Dose: RD > 0.25 Sv (25 rem) Chemical Dose: U: 21 mg sol U intake HF: CD > AEGL-2 for HF	-
Category 2 **Intermediate Consequence**	Radiation Dose: 0.25 Sv (25 rem) <RD ≤1 SV (100) rem Chemical Dose: U: CD > AEGL-2 for UF_6 HF: HF: AEGL-2 < CD ≤ AEGL-3 for HF	Radiation Dose: 0.05 Sv (5 rem) < RD ≤ 0.25 Sv (25 rem) Chemical Dose: U: 4.06 mg sol U intake HF: HF: AEGL-1 < CD ≤ AEGL-2 for HF	Radioactive release > 5000 x Table 2 Appendix B of 10CFR Part 20
Category 1 **Low Consequence**	Accidents of lower radiological and chemical exposures than those above in this column.	Accidents of lower radiological and chemical exposures than those above in this column	Radioactive releases with lower effects than those referenced above in this column

Table 3.1-4 Definition of Consequence Severity Category for Chemical Exposure (Page 1 of 1)

	High Consequence	Intermediate Consequence
Worker	> 147 mg U/ m^3 > 139 mg HF/m^3	> 19 mg U/m^3 > 78 mg HF/m^3
Outside Controlled Area (30-min exposure)	> 13 mg U/ m^3 > 28 mg HF/m^3	> 2.4 mg U/m^3 > 0.8 mg HF/m^3

Table 3.1-5 Likelihood Categories Based on 10 CFR 70.61
(Page 1 of 1)

	Likelihood Category	Probability of Occurrence*
Not Unlikely	3	More than 10^{-4} per-event per-year
Unlikely	2	Between 10^{-4} and 10^{-5} per-event per-year
Highly Unlikely	1	Less than 10^{-5} per-event per-year

*Based on approximate order of magnitude ranges.

Table 3.1-6 Risk Matrix with Risk Index Values
(Page 1 of 1)

Severity of Consequences	Likelihood of Occurrence		
	Likelihood Category 1 Highly Unlikely (1)	**Likelihood Category 2 Unlikely (2)**	**Likelihood Category 3 Not Unlikely (3)**
Consequence Category 3 High (3)	Acceptable Risk 3	Unacceptable Risk 6	Unacceptable Risk 9
Consequence Category 2 Intermediate (2)	Acceptable Risk 2	Acceptable Risk 4	Unacceptable Risk 6
Consequence Category 1 Low (1)	Acceptable Risk 1	Acceptable Risk 2	Acceptable Risk 3

Table 3.1-7 Accident Sequence and Risk Index
(Page 1 of 1)

Accident Identifier	Initiating Event	Preventive Safety Parameter 1 or IROFS 1 Failure Index	Preventive Safety Parameter 2 or IROFS 2 Failure/ Index	Mitigation IROFS Failure Index	Likelihood Index T Uncontrolled (U) / Controlled (C)	Likelihood Category	Consequence Category (Type of Accident)	Risk Index (h=f x g) Uncontrolled (U) / Controlled (C)	Comments & Recommendations

Table 3.1-8 Determination of Likelihood Category
(Page 1 of 1)

Likelihood Category	Likelihood Index T* (=sum of index numbers)
1	$T \leq -5$
2	$-5 \leq T \leq -4$
3	$-4 < T$
*Note: $T = a + b + c + d$	

Table 3.1-9 Failure Frequency Index Numbers
(Page 1 of 2)

Frequency Index No.	Based on Evidence	Based on Type of IROFS**	Comments
-6*	External event with freq. < 10^{-6}/yr	N/A	If initiating event, no IROFS needed.
-5	Initiating event with freq. < 10^{-5}/yr	N/A	For passive IROFS that contain a safe-by-design component attribute with freq. < 10^{-5}yr components or systems, failure is considered highly unlikely when no potential failure mode (e.g., bulging, corrosion, or leakage) exists, as discussed in Section 3.1.1.3.2, significant margin exists*** and these components and systems have been placed under configuration management.
-4*	No failures in 30 years for hundreds of similar IROFS in industry	Exceptionally robust passive IROFS (PEC), or an inherently safe process, or two independent active engineered IROFS (AECs), PECs, or enhanced admin. IROFS	Rarely can be justified by evidence. Further, most types of single IROFS have been observed to fail.
-3*	No failures in 30 years for tens of similar IROFS in industry	A single IROFS with redundant parts, each a PEC or AEC	
-2*	No failure of this type in this facility in 30 years	A single PEC	
-1*	A few failures may occur during facility lifetime	A single AEC, an enhanced admin. IROFS, and admin. IROFS with large margin, or a redundant admin. IROFS	
0	Failure occur every 1 to 3 years	A single administrative IROFS	
1	Several occurrences per year	Frequent event, inadequate IROFS	Not for IROFS, just initiating events
2	Occurs every week or more often	Very frequent event, inadequate IROFS	Not for IROFS, just initiating events

Table 3.1-9 Failure Frequency Index Numbers
(Page 2 of 2)

*Note: Indices less than (more negative than) -1 should not be assigned to IROFS unless the configuration management, auditing, and other management measures are of high quality, because, without these measures, the IROFS may be changed or not maintained.

**Note: The index value assigned to an IROFS of a given type in Column 3 may be one value higher or lower than the value given in Column 1. Criteria justifying assignment of the lower (more negative) value should be given in the narrative describing ISA methods. Exceptions require individual justification.

***Note: For components that are safe-by-volume (IROFS 98), safe-by-diameter (IROFS 96), or safe-by-slab thickness (IROFS 97), significant margin is defined as a margin of at least 10%, during both normal and upset conditions, between the actual design parameter value of the component and the value of the critical design attribute. For components that require a more detailed criticality analysis (IROFS 99), significant margin is defined as $k_{eff} < 0.95$, where $k_{eff} = k_{calc} + 3\sigma_{calc}$.

Table 3.1-10 Failure Probability Index Numbers
(Page 1 of 1)

Probability Index No.	Probability of Failure on Demand	Based on Type of IROFS	Comments
-6*	10^{-6}	N/A	If initiating event, no IROFS needed.
-4 or -5*	10^{-4} – 10^{-5}	Exceptionally robust passive engineered IROFS (PEC), or an inherently safe process, or two redundant IROFS more robust than simple admin. IROFS (AEC, PEC, or enhanced admin.)	Can rarely be justified by evidence. Most types of single IROFS have been observed to fail.
-3 or -4*	10^{-3} - 10^{-4}	A single passive engineered IROFS (PEC) or an active engineered IROFS (AEC) with high availability	------
-2 or -3*	10^{-2} – 10^{-3}	A single active engineered IROFS, or an enhanced admin. IROFS, or an admin. IROFS for routine planned operations	------
-1 or -2	10^{-1} – 10^{-2}	An admin. IROFS that must be performed in response to a rare unplanned demand.	------
*Note: Indices less than (more negative than) -1 should not be assigned to IROFS unless the configuration management, auditing, and other management measures are of high quality, because, without these measures, the IROFS may be changed or not maintained.			

Table 3.1-11 Failure Duration Index Numbers
(Page 1 of 1)

Duration Index No.	Avg. Failure Duration	Duration in Years	Comments
1	More than 3 years	10	
0	1 year	1	
-1	1 month	0.1	Formal monitoring to justify indices less than -1
-2	A few days	0.01	
-3	8 hours	0.001	
-4	1 hour	10^{-4}	
-5	5 minutes	10^{-5}	

Table 3.3-1 UF_6 Feed System Codes and Standards
(Page 1 of 1)

The IROFS are designed, constructed, tested and maintained to QA Levels in accordance with the QAPD. IROFS design criteria are included in ISAS Section 3.8.1, IROFS.
Rotating equipment is designed in accordance with the appropriate industry codes and standards. There is no QA Level 1 or QA Level 2 rotating equipment in the UF_6 Feed System.
Heat transfer equipment is designed in accordance with the appropriate industry codes and standards. There is no QA Level 1 or QA Level 2 heat transfer equipment in the UF_6 Feed System.
Material handling equipment is designed in accordance with the appropriate industry codes and standards and the requirements of the Occupational Safety and Health Administration. There is no QA Level 1 or QA Level 2 material handling equipment in the UF_6 Feed System.
All miscellaneous equipment is designed in accordance with the appropriate industry codes and standards. There is no QA Level 1 or QA Level 2 miscellaneous equipment in the UF_6 Feed System.
All process piping and mechanical components that contain UF_6 in the UF_6 Feed System will meet the applicable requirements of American Society of Mechanical Engineers, ASME B31 – Standards of Pressure Piping, revision in effect at the time of detailed design. The applicable provisions of ASME B31 will govern the material, design, fabrication, examination, testing and inspection for process piping and mechanical components which contain UF_6.
All 48-in cylinders used in the UF_6 Feed System comply with the requirements of ANSI N14.1, Uranium Hexafluoride Packaging for Transport, version in effect at the time of cylinder manufacture.

Table 3.3-2 Cascade System Codes and Standards
(Page 1 of 1)

The equipment IROFS are designed, constructed, tested and maintained to QA Levels in accordance with the QAPD. IROFS design criteria are included in ISAS Section 3.8.1, IROFS. The design criteria for passive IROFS that contain a safe-by-design component attribute are included in ISAS Section 3.1.1.3.2 and ISAS Appendix B.
Rotating equipment is designed in accordance with the appropriate industry codes and standards. There is no QA Level 1 or QA Level 2 rotating equipment in the Cascade System.
Heat transfer equipment is designed in accordance with the appropriate industry codes and standards. There is no QA Level 1 or QA Level 2 heat transfer equipment in the Cascade System.
All miscellaneous equipment is designed in accordance with the appropriate industry codes and standards. There is no QA Level 1 or QA Level 2 miscellaneous equipment in the Cascade System.
All process piping and mechanical components that contain UF_6 in theCascade will meet the applicable requirements of American Society of Mechanical Engineers, ASME B31 – Standards of Pressure Piping, revision in effect at the time of detailed design. The applicable provisions of ASME B31 will govern the material, design, fabrication, examination, testing and inspection for process piping and mechanical components which contain UF_6.
The design of electrical systems and electrical components in the Cascade System will meet the applicable requirements of the National Fire Protection Association, National Electrical Code, NFPA 70 current edition in effect at detailed engineering. In addition, the electrical design will meet the appropriate industry codes and standards in effect at detailed engineering.

Table 3.3-3 Product Take-Off System Codes and Standards
(Page 1 of 1)

The equipment IROFS are designed, constructed, tested and maintained to QA Levels in accordance with the QAPD. IROFS design criteria are included in ISAS Section 3.8.1, IROFS. The design criteria for passive IROFS that contain a safe-by-design component attribute are included in ISAS Section 3.1.1.3.2 and ISAS Appendix B.
Rotating equipment is designed in accordance with the appropriate industry codes and standards. There is no QA Level 1 or QA Level 2 rotating equipment in the Product Take-Off System.
Heat transfer equipment is designed in accordance with the appropriate industry codes and standards. There is no QA Level 1 or QA Level 2 heat transfer equipment in the Product Take-Off System.
Material handling equipment is designed in accordance with the appropriate industry codes and standards and the requirements of the Occupational Safety and Health Administration. There is no QA Level 1 or QA Level 2 material handling equipment in the Product Take-Off System.
All miscellaneous equipment is designed in accordance with the appropriate industry codes and standards. There is no QA Level 1 or QA Level 2 miscellaneous equipment in the Product Take-Off System.
All process piping and mechanical components that contain UF_6 in the Product Take-Off System will meet the applicable requirements of American Society of Mechanical Engineers, ASME B31 – Standards of Pressure Piping, revision in effect at the time of detailed design. The applicable provisions of ASME B31 will govern the material, design, fabrication, examination, testing and inspection for process piping and mechanical components which contain UF_6.
All 30-in and 48-in cylinders used in the Product Take-Off System comply with the requirements of ANSI N14.1, Uranium Hexafluoride Packaging for Transport, version in effect at the time of cylinder manufacture.

Table 3.3-4 Tails Take-off System Codes and Standards
(Page 1 of 1)

The equipment IROFS are designed, constructed, tested and maintained to QA Levels in accordance with the QAPD. IROFS design criteria are included in ISAS Section 3.8.1, IROFS. The design criteria for passive IROFS that contain a safe-by-design component attribute are included in ISAS Section 3.1.1.3.2 and ISAS Appendix B.
Rotating equipment is designed in accordance with the appropriate industry codes and standards. There is no QA Level 1 or QA Level 2 rotating equipment in the Tails Take-off System.
Heat transfer equipment is designed in accordance with the appropriate industry codes and standards. There is no QA Level 1 or QA Level 2 heat transfer equipment in the Tails Take-off System.
Material handling equipment is designed in accordance with the appropriate industry codes and standards and the requirements of the Occupational Safety and Health Administration. There is no QA Level 1 or QA Level 2 material handling equipment in the Tails Take-off System.
All miscellaneous equipment is designed in accordance with the appropriate industry codes and standards. There is no QA Level 1 or QA Level 2 miscellaneous equipment in the Tails Take-off System.
All process piping and mechanical components that contain UF_6 in the Tails Take-Off System will meet the applicable requirements of American Society of Mechanical Engineers, ASME B31 – Standards of Pressure Piping, revision in effect at the time of detailed design. The applicable provisions of ASME B31 will govern the material, design, fabrication, examination, testing and inspection for process piping and mechanical components which contain UF_6.
All 48-in cylinders used in the Tails Take-off System comply with the requirements of ANSI N14.1, Uranium Hexafluoride Packaging for Transport, version in effect at the time of cylinder manufacture.

Table 3.3-5 Product Blending System Codes and Standards
(Page 1 of 1)

The equipment IROFS are designed, constructed, tested and maintained to the appropriate QA Levels in accordance with the QAPD. IROFS design criteria are included in ISAS Section 3.8.1, IROFS. The design criteria for passive IROFS that contain a safe-by-design component attribute are included in ISAS Section 3.1.1.3.2 and ISAS Appendix C.
Rotating equipment is designed in accordance with the appropriate industry codes and standards. There is no QA Level 1 or QA Level 2 rotating equipment in the Product Blending System.
Heat transfer equipment is designed in accordance with the appropriate industry codes and standards. There is no QA Level 1 or QA Level 2 heat transfer equipment in the Product Blending System.
Material handling equipment is designed in accordance with the appropriate industry codes and standards and the requirements of the Occupational Safety and Health Administration. There is no QA Level 1 or QA Level 2 material handling equipment in the Product Blending System.
All miscellaneous equipment is designed in accordance with the appropriate industry codes and standards. There is no QA Level 1 or QA Level 2 miscellaneous equipment in the Product Blending System.
All process piping and mechanical components that contain UF_6 in the Product Blending System will meet the applicable requirements of American Society of Mechanical Engineers, ASME B31 – Standards of Pressure Piping, revision in effect at the time of detailed design. The applicable provisions of ASME B31 will govern the material, design, fabrication, examination, testing and inspection for process piping and mechanical components which contain UF_6.
All 30-in and 48-in cylinders used in the Product Blending System comply with the requirements of ANSI N14.1, Uranium Hexafluoride Packaging for Transport, version in effect at the time of cylinder manufacture.

Table 3.3-6 Product Liquid Sampling System Codes and Standards
(Page 1 of 1)

The equipment IROFS are designed, constructed, tested and maintained to the appropriate QA Levels in accordance with the QAPD. IROFS design criteria are included in ISAS Section 3.8.1, IROFS. The design criteria for passive IROFS that contain a safe-by-design component attribute are included in ISAS Section 3.1.1.3.2 and ISAS Appendix C.
Product Liquid Sampling Autoclaves and their supports are designed to meet the requirements of the American Society of Mechanical Engineers (ASME), Boiler and Pressure Vessel Code, Section VIII, Division I, current edition at the time of detail design.
Rotating equipment is designed in accordance with the appropriate industry codes and standards. There is no QA Level 1 or QA Level 2 rotating equipment in the Product Liquid Sampling System.
Heat transfer equipment is designed in accordance with the appropriate industry codes and standards. There is no QA Level 1 or QA Level 2 heat transfer equipment in the Product Liquid Sampling System.
Material handling equipment is designed in accordance with the appropriate industry codes and standards and the requirements of the Occupational Safety and Health Administration. There is no QA Level 1 or QA Level 2 material handling equipment in the Product Liquid Sampling System.
All miscellaneous equipment is designed in accordance with the appropriate industry codes and standards. There is no QA Level 1 or QA Level 2 miscellaneous equipment in the Product Liquid Sampling System.
All process piping and mechanical components that contain UF_6 in the Product Liquid Sampling System will meet the applicable requirements of American Society of Mechanical Engineers, ASME B31 – Standards of Pressure Piping, revision in effect at the time of detailed design. The applicable provisions of ASME B31 will govern the material, design, fabrication, examination, testing and inspection for process piping and mechanical components which contain UF_6.
All 1.5-in, 30-in, and 48-in cylinders used in the Product Liquid Sampling System comply with the requirements of ANSI N14.1, Uranium Hexafluoride Packaging for Transport, version in effect at the time of cylinder manufacture.

Table 3.3-7 Dump System Codes and Standards
(Page 1 of 1)

The equipment IROFS are designed, constructed, tested and maintained to the appropriate QA Levels in accordance with the QAPD. IROFS design criteria are included in ISAS Section 3.8.1, IROFS. The design criteria for passive IROFS that contain a safe-by-design component attribute are included in ISAS Section 3.1.1.3.2 and ISAS Appendix B.
Rotating equipment is designed in accordance with the appropriate industry codes and standards. There is no QA Level 1 or QA Level 2 rotating equipment in the Dump System.
Heat transfer equipment is designed in accordance with the appropriate industry codes and standards. There is no QA Level 1 or QA Level 2 heat transfer equipment in the Dump System.
All miscellaneous equipment is designed in accordance with the appropriate industry codes and standards. There is no QA Level 1 or QA Level 2 miscellaneous equipment in the Dump System.
All process piping and mechanical components that contain UF_6 in the Dump System will meet the applicable requirements of American Society of Mechanical Engineers, ASME B31 – Standards of Pressure Piping, revision in effect at the time of detailed design. The applicable provisions of ASME B31 will govern the material, design, fabrication, examination, testing and inspection for process piping and mechanical components which contain UF_6.

Table 3.3-8 Gaseous Effluent Ventilation System Codes and Standards
(Page 1 of 1)

Equipment Type	Code or Standard
Filter Housings & Filters	NFPA 90A, 2002 AMC Pub. 99 – 2003 AMCA Pub. 261 – 1998 ASME AG-1-1997 DOE Handbook - 2003 ANSI/ASME N509 – 1989 ANSI/ASME N510 – 1989 ASME NQA-1 – 1994 ASTM D6646-03 ANSI/AWS-D9.1 – 2000
Fans/Motors	AMCA 210 – 1999 NEMA MG1 – 2006, Rev. 1
Dampers	ASME AG-1 - 1997

Table 3.3-9 Cylinder Evacuation Systems Codes and Standards
(Page 1 of 1)

The equipment IROFS are designed, constructed, tested and maintained to the appropriate QA Levels in accordance with the QAPD. IROFS design criteria are included in ISAS Section 3.8.1, IROFS. The design criteria for passive IROFS that contain a safe-by-design component attribute are included in ISAS Section 3.1.1.3.2 and ISAS Appendix C.
Rotating equipment is designed in accordance with the appropriate industry codes and standards. There is no QA Level 1 or QA Level 2 rotating equipment in the Cylinder Evacuation System.
Heat transfer equipment is designed in accordance with the appropriate industry codes and standards. There is no QA Level 1 or QA Level 2 heat transfer equipment in the Cylinder Evacuation System.
Material handling equipment is designed in accordance with the appropriate industry codes and standards and the requirements of the Occupational Safety and Health Administration. There is no QA Level 1 or QA Level 2 material handling equipment in the Cylinder Evacuation System.
All miscellaneous equipment is designed in accordance with the appropriate industry codes and standards. There is no QA Level 1 or QA Level 2 miscellaneous equipment in the Cylinder Evacuation System.
All process piping and mechanical components that contain UF_6 in the Cylinder Preparation Processes will meet the applicable requirements of the American Society of Mechanical Engineers, ASME B31 – Standards of Pressure Piping, revision in effect at the time of detailed design. The applicable provisions of ASME B31 will govern the material, design, fabrication, examination, testing and inspection for process piping and mechanical components which contain UF_6.
All 1.5-in, 30-in, and 48-in cylinders used in the Cylinder Preparation Processes comply with the requirements of ANSI N14.1, Uranium Hexafluoride Packaging for Transport, version in effect at the time of cylinder manufacture.

Table 3.3-10 Codes and Standards
(Page 1 of 3)

ACI 318-05, Building Code Requirements for Structural Concrete, 2008.
ACI 349-06, Code Requirements for Nuclear Safety Related Concrete Structures, 2007.
AIChE, Guidelines for Hazard Evaluation Procedures, 2nd Edition, April, 1992.
AISC Manual of Steel Construction, Thirteenth Edition, 2005.
ANSI/AISC 360-05 – Specification for Structural Steel Buildings, 2005.
ANSI N14.1-2001, American National Standard for Nuclear Materials – Uranium Hexafluoride Packaging for Transport, 2001.
ASCE 43-05, Seismic Design Criteria for Structural Systems, and Components in Nuclear Facilities, 2005.
ASCE 7-05, Minimum Design Loads for Building and Other Structures, 2006.
ASME B31, Standards of Pressure Piping, revision in effect at the time of detailed design (The applicable provisions of ASME B31 will govern the material, design, fabrication, examination, testing and inspection for piping.)
ASME, Boiler and Pressure Vessel Code, Section VIII, Division 1, 2007.
ASTM C761-04 – Standard Test Methods for Chemical, Mass Spectrometric, Spectrochemical, Nuclear, and Radiochemical Analysis of Uranium Hexafluoride, 2004.
ASTM E84-08a, “Standard Test Method for Surface Burning Characteristics of Building Materials,” 2008.
DOE, 2003. HDBK-1169-2003, Nuclear Air Cleaning Handbook, Department of Energy, 2003.
IEEE C2-2007, National Electrical Safety Code, 2007.
IEEE C37.90, IEEE Standard for Relays and Relay Systems Associated with Electric Power Apparatus, 1989.
IEEE C37.90.1, IEEE Standard for Surge Withstand Capability (SWC) Tests for Relays and Relay Systems Associated with Electric Power Apparatus, 2002.
IEEE 80, Guide for Safety in AC Substation Grounding, 2000.
IEEE 81, Guide for Measuring Earth Resistivity, Ground Impedance, and Earth Surface Potential of a Ground System, 1983.
IEEE 142, Grounding of Industrial and Commercial Power Systems.
IEEE 450, IEEE Recommended Practice for Maintenance, Testing, and Replacement of Vented Lead-Acid Batteries for Stationary Applications, 2002.
IEEE 484, IEEE Recommended Practice for Installation Design and Installation of Vented Lead-Acid Batteries for Stationary Applications, 2002.
IEEE 485, IEEE Recommended Practice for Sizing Lead-Acid Batteries for Stationary Applications, 1997.

Table 3.3-10 Codes and Standards

(Page 2 of 3)

IEEE 519, IEEE Recommended Practices and Requirements for Harmonic Control in Electrical Power Systems, 1992.
IEEE 946, IEEE Recommended Practice for the Design of DC Auxiliary Power Systems for Generating Stations, 2004.
ISO 668: 1995, Series 1 Freight Containers – Classification, Dimension and Ratings, 1995.
NFPA 10, Portable Fire Extinguishers, 2007.
NFPA 101, Life Safety Code, 2006.
NFPA 13, Installation of Sprinkler Systems, 2007.
NFPA 14, Standpipe, Private Hydrant and Hose Systems, 2007.
NFPA 20, Installation of Stationary Pumps, 2007.
NFPA 22, Water Tanks for Private Fire Protection 2008.
NFPA 220, Standard on Type of Building Construction, 2006
NFPA 221, Fire Walls and Fire Barrier Walls, 2006.
NFPA 251, Standard Methods of Tests of Fire Endurance of Building Construction and Methods, 2006.
NFPA 24, Private Fire Service Mains and Their Appurtenances, 2007.
NFPA 25, Water Based Fire Protection Systems, 2002.
NFPA 30, Flammable and Combustible Liquids Code, 2008.
NFPA 55, Compressed & Liquefied Gases in Cylinders, 2005.
NFPA 58, Liquefied Petroleum Gas Code, 2004.
NFPA 600 Industrial Fire Brigades, 2005.
NFPA 70, National Electric Code, 2008.
NFPA 704, Standard System for the Identification of the Hazards of Materials for Emergency Response, 2001.
NFPA 72, National Fire Alarm Code, 2007.
NFPA 780, Standard for the Installation of Lightning Protection Systems, 2008.
NFPA 80, Fire Doors and Fire Windows, 2007.
NFPA 801, Fire Protection for Facilities Handling Radioactive Materials, 2008.
NFPA 80A, Exterior Fire Exposures, 2007.
NFPA 90A, Installation of Air Conditioning and Ventilating Systems, 2002.

Table 3.3-10 Codes and Standards
(Page 3 of 3)

NFPA 90B, Installation of Warm Air Heating and Air Conditioning Systems, 2006.
NFPA 91, Exhaust Systems for Air Conveying of Materials, 2004.
NFPA 110, Standard for Emergency and Standby Power Systems, 2005.
NFPA 111, Standard on Stored Electrical Energy Emergency and Standby Power Systems, 2005.
NFPA 70E, Standard for Electrical Safety in the Workplace, 2004.
NFPA 1410, Standard on Training for Emergency Scene Operations, 2005
PCI Design Handbook – Precast and Prestressed Concrete, 6th Edition, 2004.
International Building Code (IBC), 2006.
International Fire Code (IFC), 2006.
International Mechanical Code (IMC), 2006.
International Fuel Gas Code (IGC), 2006.
International Energy Conservation Code (IECC), 2006.
Uniform Plumbing Code (UPC), 2003.

TABLE OF CONTENTS

Page

4.0 RADIATION PROTECTION 4.0-1

4.1 COMMITMENT TO RADIATION PROTECTION PROGRAM IMPLEMENTATION 4.1-1

4.1.1 Responsibilities of Key Program Personnel 4.1-2

4.1.2 Staffing of the Radiation Protection Program 4.1-4

4.1.3 Independence of the Radiation Protection Program 4.1-4

4.1.4 Radiation Safety Committee 4.1-4

4.2 COMMITMENT TO AN ALARA PROGRAM 4.2-1

4.2.1 ALARA Committee 4.2-2

4.3 ORGANIZATION AND PERSONNEL QUALIFICATIONS 4.3-1

4.4 COMMITMENT TO WRITTEN PROCEDURES 4.4-1

4.4.1 Radiation Work Permit Procedures 4.4-1

4.5 TRAINING COMMITMENTS 4.5-1

4.5.1 Radiation Protection Training 4.5-2

4.6 VENTILATION AND RESPIRATORY PROTECTION PROGRAMS COMMITMENTS 4.6-1

4.6.1 Ventilation Program 4.6-1

4.6.2 Respiratory Protection Program 4.6-2

4.7 RADIATION SURVEYS AND MONITORING PROGRAMS COMMITMENTS 4.7-1

4.7.1 Radiological Zones 4.7-3

4.7.2 Access and Egress Control 4.7-5

4.7.3 Posting for Radiation Protection Awareness 4.7-5

4.7.4 Protective Clothing and Equipment 4.7-6

4.7.5 Personnel Monitoring for External Exposures 4.7-6

4.7.6 Personnel Monitoring for Internal Exposures 4.7-7

4.7.7 Evaluation of Doses 4.7-7

4.7.8 Monitor Stations 4.7-7

4.7.9 Locker Rooms 4.7-8

4.7.10 Storage Areas 4.7-8

4.8 CONTAMINATION AND RADIATION CONTROL 4.8-1

4.8.1 Internal Exposures 4.8-1

4.8.2 External Exposures 4.8-3

4.8.3 Procedures 4.8-4

TABLE OF CONTENTS
(continued)
Page

4.8.4 Instrumentation 4.8-4

4.8.5 Contamination Control 4.8-4

4.9 MAINTENANCE AREAS – METHODS AND PROCEDURES FOR CONTAMINATION CONTROL 4.9-1

4.9.1 Decontamination Facilities 4.9-1

4.9.2 Contaminated Laundry 4.9-2

4.10 DECONTAMINATION POLICY AND PROVISIONS 4.10-1

4.11 ADDITIONAL PROGRAM COMMITMENTS 4.11-1

4.11.1 Leak Testing Byproduct Material Sources 4.11-1

4.11.2 Records and Reports 4.11-1

4.12 REFERENCES 4.12-1

LIST OF TABLES

Table 4.1-1 Occupational Administrative Radiation Exposure Limits

Table 4.1-2 Estimated Dose Rates

Table 4.1-3 Estimated Individual Exposures

Table 4.1-4 Annual Maximum and Average Worker Doses at Capenhurst

Table 4.7-1 Radiation Emitted from Natural UF_6 Feed

Table 4.11-1 Typical Quantities of Byproduct Material for a Uranium Enrichment Centrifuge Plant

LIST OF FIGURES

Figure 4.7-1 Uranium and Decay Products of Interest
Figure 4.7-2 Projected Radiological Zones

4.0 RADIATION PROTECTION

The NRC previously reviewed the National Enrichment Facility SAR and concluded in NUREG-1827 (NRC, 2005a), that: "The applicant's RP program meets the requirements of Parts 19, 20, 30, 40, and 70." This Chapter describes the facility Radiation Protection Program of the Eagle Rock Enrichment Facility (EREF). The Radiation Protection Program protects the radiological health and safety of workers and complies with the regulatory requirements in 10 CFR 19 (CFR, 2008a), 20 (CFR, 2008b), 30 (CFR, 2008x), 40 (CFR, 2008y) and 70 (CFR, 2008c).

The Radiation Protection Program for the EREF is similar to that described in the National Enrichment Facility SAR (LES, 2005). The following are the significant changes that have been made in this submittal for the EREF:

- A licensed commercial laundry service is used rather than a plant laundry system.
- Information on the typical contamination monitoring equipment that may be used at the facility has been updated.
- The EREF organization is different from that described for the National Enrichment Facility.

The information provided in this chapter, the corresponding regulatory requirement and the NRC acceptance criteria from NUREG-1520 (NRC, 2002), Chapter 4, are summarized in the table below. Information beyond that required by the Standard Review Plan is included.

Information Category and Requirement	10 CFR Citation	NUREG-1520 Chapter 4 Reference
Section 4.1 Commitment to Radiation Protection Program Implementation	10 CFR 20.1101, Subpart B	4.4.1.3
Section 4.2 Commitment to an ALARA Program	10 CFR 20.1101	4.4.2.3
Section 4.3 Organization and Personnel Qualifications	10 CFR 70.22	4.4.3.3
Section 4.4 Commitment to Written Procedures	10 CFR 70.22(a)(8)	4.4.4.3
Section 4.5 Training Commitments	10 CFR 19.12 & 10 CFR 20.2110	4.4.5.3
Section 4.6 Ventilation and Respiratory Protection Programs Commitments	10 CFR 20, Subpart H	4.4.6.3
Section 4.7 Radiation Surveys and Monitoring Programs Commitments	10 CFR 20, Subparts F, C, L, M	4.4.7.3
Section 4.8 Contamination and Radiation Control	N/A	N/A
Section 4.9 Maintenance Areas – Methods and Procedures for Contamination Control	N/A	N/A

Information Category and Requirement	10 CFR Citation	NUREG-1520 Chapter 4 Reference
Section 4.10 Decontamination Policy and Provisions	N/A	N/A
Section 4.11 Additional Program Commitments	N/A	4.4.8.3

4.1 COMMITMENT TO RADIATION PROTECTION PROGRAM IMPLEMENTATION

The Radiation Protection Program meets the requirements of 10 CFR 20 Subpart B - Radiation Protection Programs (20.1101 (a)-(d)) (CFR, 2008d) and is consistent with the guidance provided in Regulatory Guide 8.2, Guide for Administrative Practice in Radiation Monitoring (NRC, 1973a). The facility develops, documents and implements its Radiation Protection Program commensurate with the risks posed by a uranium enrichment operation. The facility uses, to the extent practicable, procedures and engineering controls based upon sound radiation protection principles to achieve occupational doses and doses to members of the public that are as low as is reasonably achievable (ALARA). The Radiation Protection Program content and implementation are reviewed at least annually as required by 10 CFR 20.1101(c) (CFR, 2008d). In addition, in accordance with 10 CFR 20.1101(d) (CFR, 2008d), constraints on atmospheric releases are established for the EREF such that no member of the public would be expected to receive a total effective dose equivalent in excess of 0.1 mSv/yr (10 mrem/yr) from these releases. Additional information regarding compliance with 10 CFR 20.1101(d) is provided in Section 9.2.

The facility's philosophy for radiation protection is reflected in the establishment of a Radiation Protection Program that has the specific purpose of maintaining occupational radiation exposures ALARA. This program includes written procedures, periodic assessments of work practices and internal/external doses received, work plans and the personnel and equipment required to help implement the ALARA goal.

The facility's administrative personnel exposure limits have been set below the limits specified in 10 CFR Part 20 (CFR, 2008b). This provides assurance that legal radiation exposure limits are not exceeded and that the ALARA principle is emphasized. The facility administrative exposure limits are given in Table 4.1-1, Occupational Administrative Radiation Exposure Limits. Estimates of the facility area radiation dose rates and individual personnel exposures, during normal operations, are shown in Table 4.1-2, Estimated Dose Rates and Table 4.1-3, Estimated Individual Exposures. These estimates are based upon the operating experience of similar facilities in Europe.

Annual whole-body dose equivalents accrued by workers at an operating uranium enrichment plant are typically low. The maximum individual annual dose equivalents for the years 2003 through 2007 at the Urenco Capenhurst site, located in the United Kingdom, are summarized in Table 4.1-4, Annual Maximum and Average Worker Doses at Capenhurst (Urenco, 2003); (Urenco, 2004); (Urenco, 2005); (Urenco, 2006); (Urenco, 2007). The worker maximum and average doses varied over this time period. However, in general, the maximum worker dose increased from 2.03 mSv (203 mrem) in 2003 to 3.41 mSv (341 mrem) in 2007. During this same time period, the average dose also increased from 0.22 mSv (22 mrem) to 0.44 mSv (44 mrem). The Capenhurst site was expanding its processing capacity during this time. In addition, the listed worker doses also include exposures that are not directly related to enrichment plant operations (e.g., research). Therefore, since additional exposures occur at the Capenhurst Site, it is likely that the exposures at the EREF will be lower. To put these doses in perspective, note that in the United States, individuals receive an annual effective dose equivalent of approximately 3.0 mSv (300 mrem) from background radiation (NCRP, 1987).

Protection of plant personnel requires (a) surveillance of and control over the radiation exposure of personnel; and (b) maintaining the exposure of all personnel not only within permissible limits, but "as low as is reasonably achievable," in compliance with applicable regulations and license conditions. The objectives of Radiation Protection are to prevent acute radiation injuries

(nonstochastic or deterministic effects) and to limit the potential risks of probabilistic (stochastic) effects (which may result from chronic occupational exposure) to an acceptable level.

The radiation exposure policy and control measures for personnel are set up in accordance with requirements of 10 CFR Part 20 (CFR, 2008b) and the guidance of applicable Regulatory Guides. Recommendations from the International Commission on Radiological Protection (ICRP) and the National Council on Radiation Protection and Measurements (NCRP) may also be used in the formulation and evolution of the facility Radiation Protection Program.

The facility corrective action process is implemented if (1) personnel dose monitoring results or personnel contamination levels exceed the administrative personnel limits; or if an incident results in airborne occupational exposures exceeding the administrative limits; or (2) the dose limits in 10 CFR 20 (CFR, 2008b), Appendix B (CFR, 2008m) or 10 CFR 70.61 (CFR, 2008e) are exceeded.

The information developed from the corrective action process is used to improve radiation protection practices and to preclude the recurrence of similar incidents. If an incident as described in item two above occurs, the NRC is informed of the corrective action taken or planned to prevent recurrence and the schedule established by the facility to achieve full compliance. The corrective action process and incident investigation process are described in Section 11.6, Incident Investigations and Corrective Action Process.

The subject matter discussed above is identical to the National Enrichment Facility (NEF) SAR (LES, 2005) subject matter with the exception that the information on Capenhurst doses has been updated. The NRC staff previously reviewed the National Enrichment Facility SAR (LES, 2005) application relative to the general guidelines of the occupational radiation protection program and concluded that the descriptions, specifications or analyses provided an adequate basis for safety review of the facility operations and that the construction and operation of the facility would not pose an undue risk to public health and safety. The specific discussion is in NUREG-1827 (NRC, 2005a).

4.1.1 Responsibilities of Key Program Personnel

4.1.1.1 AREVA Enrichment Services AES

In this section the organizational structure of the Radiation Protection Program is described. The responsibilities of key personnel are also discussed. These personnel play an important role in the protection of workers, the environment and implementation of the ALARA program. Chapter 2, Organization and Administration, discusses the facility organization and administration in further detail. Chapter 2, Section 2.2, Key Management Positions, presents a detailed discussion of the responsibilities of key management personnel. The differences between the EREF and NEF organizations reflect AREVA's experience in operating fuel cycle facilities. Although some titles and scope of responsibility have been changed, the functions to be performed remain the same. Refer to Chapter 2.0 for additional information regarding these differences.

The AES president has overall responsibility for the operation of the EREF including radiation protection.

4.1.1.2 Plant Manager

The Plant Manager reports to the AES President and has direct responsibility for the safe operation of the facility including the protection of all persons against radiation exposure

resulting from facility operations and materials, and for compliance with applicable NRC regulations and the facility license.

4.1.1.3 Environmental, Health, Safety and Licensing Manager

The Environmental, Health, Safety, and Licensing (EHS&L) Manager reports to the Plant Manager and has the overall responsibility for development and implementation of the radiation protection program. The EHS&L Manager works with the other facility managers to ensure consistent interpretations of EHS&L requirements, performs independent reviews, and supports facility and operations change control reviews.

4.1.1.4 Radiation Protection/Chemistry Manager

The Radiation Protection/Chemistry Manager reports to the EHS&L Manager. In matters involving radiological protection, the Radiation Protection/Chemistry Manager has direct access to the Plant Manager. The Radiation Protection/Chemistry Manager and his staff are responsible for:

- Establishing the Radiation Protection Program
- Generating and maintaining procedures associated with the program
- Assuring that ALARA is practiced by all personnel
- Reviewing and auditing the efficacy of the program in complying with NRC and other governmental regulations and applicable Regulatory Guides.
- Modifying the program based upon experience and facility history
- Adequately staffing the Radiation Protection group to implement the Radiation Protection Program
- Establishing and maintaining an ALARA program
- Establishing and maintaining a respirator usage program
- Monitoring worker doses, both internal and external
- Complying with the radioactive materials possession limits for the facility
- Handling of radioactive wastes when disposal is needed
- Calibration and quality assurance of all radiological instrumentation, including verification of required Lower Limits of Detection or alarm levels
- Establishing and maintaining a radiation safety training program for personnel working in Restricted Areas
- Performing audits of the Radiation Protection Program on an annual basis
- Establishing and maintaining the radiological environmental monitoring program
- Posting the Restricted Areas, and within these areas, posting: Radiation, Airborne Radioactivity, High Radiation and Contaminated Areas as appropriate; and developing occupancy guidelines for these areas as needed.

4.1.1.5 Operations Manager

The Operations Manager reports to the Plant Manager and has the responsibility for the safe day-to-day operation of the facility including operating in accordance with procedures so that all effluents released to the environment and all exposures to the public and facility personnel meet the limits specified in applicable regulations, procedures and guidance documents.

4.1.1.6 Facility Personnel

Facility personnel are required to work safely and to follow the rules, regulations and procedures that have been established for their protection and the protection of the public. Personnel whose duties require (1) working with radioactive material, (2) entering radiation areas, (3) controlling facility operations that could affect effluent releases, or (4) directing the activities of others, are trained such that they understand and effectively carry out their responsibilities.

4.1.2 Staffing of the Radiation Protection Program

Only suitably trained radiation protection personnel are employed at the facility. For example, the Radiation Protection/Chemistry Manager has, as a minimum, a bachelor's degree (or equivalent) in an engineering or scientific field and four years of responsible nuclear experience. Other members of the Radiation Protection Program staff are trained and qualified consistent with the guidance provided in American National Standards Institute (ANSI) standard 3.1, Selection, Qualification and Training of Personnel for Nuclear Power Plants (ANSI, 1993).

Sufficient resources in terms of staffing and equipment are provided to implement an effective Radiation Protection Program.

4.1.3 Independence of the Radiation Protection Program

The Radiation Protection Program remains independent of the facility's routine operations. This independence ensures that the Radiation Protection Program maintains its objectivity and is focused only on implementing sound radiation protection principles necessary to achieve occupational doses and doses to members of the public that are ALARA. It was previously noted in Section 4.1.1.4, Radiation Protection/Chemistry Manager, that in matters involving radiological protection, the Radiation Protection Manager has direct access to the Plant Manager.

4.1.4 Radiation Safety Committee

A Radiation Safety Committee meets periodically to review, in accordance with 10 CFR 20.1101 (c) (CFR, 2008d), the status of projects, measure performance, look for trends and to review radiation safety aspects of facility operations. The Radiation Protection/Chemistry Manager chairs the Radiation Safety Committee. The other Radiation Safety Committee members come from quality assurance, operations, maintenance, and technical support, as deemed appropriate by the Plant Manager.

The objectives of the Radiation Safety Committee are to maintain a high standard of radiation protection in all facility operations. The Radiation Safety Committee reviews the content and implementation of the Radiation Protection Program at a working level and strives to improve the program by reviewing exposure trends, the results of audits, regulatory inspections, worker suggestions, survey results, exposure incidents, etc.

The maximum interval between meetings may not exceed 180 days. A written report of each Radiation Safety Committee meeting is forwarded to all Managers.

4.2 COMMITMENT TO AN ALARA PROGRAM

Section 4.1, Commitment to Radiation Protection Program Implementation, above, states the facility's commitment to the implementation of an ALARA program. The objective of the program is to make every reasonable effort to maintain facility exposures to radiation as far below the dose limits of 10 CFR 20.1201 (CFR, 2008f) as is practical and to maintain radiation exposures to members of the public such that they are not expected to exceed the dose constraints of 10 CFR 20.1101(d) (CFR, 2008d). The design and implementation of the ALARA program is consistent with the guidance provided in Regulatory Guides 8.2 (NRC, 1973a), 8.13 (NRC, 1999a), 8.29 (NRC, 1996), and 8.37 (NRC, 1993g). The operation of the facility is consistent with the guidance provided in Regulatory Guide 8.10 (NRC, 1977). The guidance of Regulatory Guide 4.21 will be followed to minimize, to the extent practicable, contamination of the facility and the environment, facilitate eventual decommissioning, and minimize, to the extent practicable, the generation of radioactive waste (NRC, 2008).

Annual doses to individual personnel are maintained ALARA. In addition, the annual collective dose to personnel (i.e., the sum of all annual individual doses, expressed in person-Sv or person-rem) is maintained ALARA. The dose equivalent to the embryo/fetus is maintained below the limits of 10 CFR 20.1208 (CFR, 2008g).

The Radiation Protection Program is written and implemented to ensure that it is comprehensive and effective. The written program documents policies that are implemented to ensure the ALARA goal is met. Facility procedures are written so that they incorporate the ALARA philosophy into the routine operations of the facility and ensure that exposures are consistent with 10 CFR 20.1101 (CFR, 2008d) limits. As discussed in Section 4.7, Radiation Surveys and Monitoring Programs Commitments, radiological zones will be established within the facility. The establishment of these zones supports the ALARA commitment in that the zones minimize the spread of contamination and reduce unnecessary exposure of personnel to radiation.

Specific goals of the ALARA program include maintaining occupational exposures as well as environmental releases as far below regulatory limits as is reasonably achievable. The ALARA concept is also incorporated into the design of the facility. The size and number of areas with higher doses rates are minimized consistent with accessibility for performing necessary services in the areas. Areas where facility personnel spend significant amounts of time are designed to maintain the lowest dose rates reasonably achievable.

The Radiation Protection/Chemistry Manager is responsible for implementing the ALARA program and ensuring that adequate resources are committed to make the program effective. The Radiation Protection/Chemistry Manager prepares an annual ALARA program evaluation report. The report reviews (1) radiological exposure and effluent release data for trends, (2) audits and inspections, (3) use, maintenance and surveillance of equipment used for exposure and effluent control, and (4) other issues, as appropriate, that may influence the effectiveness of the radiation protection/ALARA programs. Copies of the report are submitted to the AES President, Plant Manager, Radiation Safety Committee, and the Safety Review Committee.

The subject matter discussed above is identical to the National Enrichment Facility SAR (LES, 2005) subject matter with the exception that some organizational titles have been changed. The differences between the EREF and NEF organizations reflect AREVA's experience in operating fuel cycle facilities. Although some titles and scope of responsibility have been changed, the functions to be performed remain the same. Refer to Chapter 2.0 for additional information regarding these differences.

The NRC staff previously reviewed the National Enrichment Facility SAR (LES, 2005) application relative to the general guidelines of the occupational radiation protection program

and concluded that the descriptions, specifications or analyses provided an adequate basis for safety review of the facility operations and that the construction and operation of the facility would not pose an undue risk to public health and safety. The specific discussion is in NUREG-1827 (NRC, 2005a).

4.2.1 ALARA Committee

The Safety Review Committee (SRC) fulfills the duties of the ALARA Committee. The SRC meets at least quarterly. Additional details concerning the membership and qualifications of the SRC are provided in Chapter 2, Organization and Administration.

Programs for improving the effectiveness of equipment used for effluent and exposure control are also evaluated by the SRC. The recommendations of the committee are documented in writing. The implementation of the committee's recommendations is tracked to completion via the Corrective Action Program, which is described in Section 11.6, Incident Investigations and Corrective Action Process.

As part of its duties, the SRC reviews the effectiveness of the ALARA program and determines if exposures, releases and contamination levels are in accordance with the ALARA concept. It also evaluates the results of assessments made by the radiation protection organization, reports of facility radiation levels, contamination levels, and employee exposures for identified categories of workers and types of operations. The committee is responsible for ensuring that the occupational radiation exposure dose limits of 10 CFR 20.1201 (CFR, 2008f) are not exceeded under normal operations. The committee determines if there are any upward trends in personnel exposures, environmental releases and facility contamination levels.

The ALARA program facilitates interaction between radiation protection and operations personnel. The SRC, comprising staff members responsible for radiation protection and operations, is particularly useful in achieving this goal. The SRC periodically reviews the goals and objectives of the ALARA program. The ALARA program goals and objectives are revised to incorporate, as appropriate, new technologies or approaches and operating procedures or changes that could cost-effectively reduce potential radiation exposures.

4.3 ORGANIZATION AND PERSONNEL QUALIFICATIONS

The regulation 10 CFR 70.22 (CFR, 2008h) requires that the technical qualifications, including training and experience of facility staff be provided in the license application. This information is provided in this section.

The Radiation Protection Program staff is assigned responsibility for implementation of the Radiation Protection Program functions. Only suitably trained radiation protection personnel are employed at the facility. Staffing is consistent with the guidance provided in Regulatory Guides 8.2 (NRC, 1973a) and 8.10 (NRC, 1977).

As previously discussed, the Radiation Protection/Chemistry Manager's qualification requirements are described in Section 2.2.4 and include at least four years of responsible nuclear experience. In addition, at least one member of the Radiation Protection/Chemistry Manager's staff shall have at least two years of experience at a facility that processes uranium, including uranium in soluble form. The differences between the EREF and NEF organizations (including personnel qualifications) reflect AREVA's experience in operating fuel cycle facilities.

As stated in Section 4.1.2, Staffing of the Radiation Protection Program, other members of the Radiation Protection Program staff are trained and qualified consistent with the guidance provided in American National Standards Institute (ANSI) standard 3.1, Selection, Qualification and Training of Personnel for Nuclear Power Plants (ANSI, 1993).

The Radiation Protection/Chemistry Manager reports to the EHS&L Manager and has the responsibility for establishing and implementing the Radiation Protection Program. These duties include the training of personnel in use of equipment, control of radiation exposure of personnel, continuous determination and evaluation of the radiological status of the facility, and conducting the radiological environmental monitoring program. The facility organization chart establishes clear organizational relationships among the radiation protection staff and the other facility line managers. The facility operating organization is described in Chapter 2, Organization and Administration.

In all matters involving radiological protection, the Radiation Protection/Chemistry Manager has direct access to the Plant Manager. The Radiation Protection/Chemistry Manager is skilled in the interpretation of radiation protection data and regulations. The Radiation Protection/Chemistry Manager is also familiar with the operation of the facility and radiation protection concerns relevant to the facility. The Radiation Protection/Chemistry Manager is a resource for radiation safety management decisions.

4.4 COMMITMENT TO WRITTEN PROCEDURES

All operations involving licensed materials are conducted through the use of procedures as required by 10 CFR 70.22(8) (CFR, 2008h). Radiation protection procedures are prepared, reviewed and approved to carry out activities related to the Radiation Protection Program. Procedures are used to control radiation protection activities in order to ensure that the activities are carried out in a safe, effective and consistent manner. Radiation protection procedures are reviewed and revised as necessary, to incorporate any facility or operational changes or changes to the facility's Integrated Safety Analysis (ISA).

The radiation protection procedures are assigned to personnel qualified to develop such procedures. Initial procedure drafts are reviewed by members of the facility staff and other personnel with enrichment plant operating experience. The designated approver determines whether or not any additional, cross-disciplinary review is required. Changes to procedures are processed as follows. The writer documents the change as well as the reason for the change. The Radiation Protection/Chemistry Manager (or a designee who has the qualifications of the Radiation Protection/Chemistry Manager) reviews and approves procedures as well as proposed revisions to procedures. Final approval of the revised procedure is by the Plant Manager, or a designated alternate. Chapter 11, Management Measures, describes the program implemented for the control of procedures.

4.4.1 Radiation Work Permit Procedures

All work performed in Restricted Areas is performed in accordance with a Radiation Work Permit (RWP). The procedures controlling RWPs are consistent with the guidance provided in Regulatory Guide 8.10 (NRC, 1977). An RWP may also be required whenever the Radiation Protection/Chemistry Manager deems that one is necessary. Activities involving licensed materials not covered by operating procedures and where radioactivity levels are likely to exceed airborne radioactivity limits require the issuance of a RWP. Both routine and non-routine activities are performed under a RWP. The RWP provides a description of the work to be performed. That is, the RWP defines the authorized activities. The RWP summarizes the results of recent dose rate surveys, contamination surveys, airborne radioactivity results, etc. The RWP specifies the precautions to be taken by those performing the task. The specified precautions may include personal protective equipment to be worn while working (e.g., gloves, respirators, personnel monitoring devices), stay-times or dose limits for work in the area, record keeping requirements (e.g., time or dose spent on job) and the attendance of a radiation protection technician during the work. The RWP requires approval by the Radiation Protection/Chemistry Manager or designee. The designee must meet the requirements of Section 4.1.2, Staffing of the Radiation Protection Program. RWPs have a predetermined period of validity with a specified expiration or termination time.

Standing RWPs are issued for routinely performed activities, such as tours of the plant by shift personnel or the changing of cylinders. A Standing RWP would, for example, be used for the job evolution of cylinder changing; a new RWP is not issued each time a new cylinder is changed.

Listed below are requirements of the Radiation Work Permit procedures:

- The Radiation Protection/Chemistry Manager or designee is responsible for determining the need for, issuing and closing out RWPs.
- Planned activities or changes to activities inside Restricted Areas or work with licensed materials are reviewed by the Radiation Protection/Chemistry Manager or designee for the

potential to cause radiation exposures to exceed action levels or to produce radioactive contamination.

- RWP's include requirements for any necessary safety controls, personnel monitoring devices, protective clothing, respiratory protective equipment, and air sampling equipment and the attendance of radiation protection technicians at the work location.
- RWP's are posted at access points to Restricted Areas with copies of current RWP's posted at the work area location.
- RWP's clearly define and limit the work activities to which they apply. A RWP is closed out when the applicable work activity for which it was written is completed and terminated.
- RWP's are retained as a record at least for the life of the facility.

The subject matter discussed above is identical to the National Enrichment Facility SAR (LES, 2005) subject matter with the exception that some organizational titles have been changed. The NRC staff previously reviewed the National Enrichment Facility SAR (LES, 2005) application relative to the general guidelines of the occupational radiation protection program and concluded that the descriptions, specifications or analyses provided an adequate basis for safety review of the facility operations and that the construction and operation of the facility would not pose an undue risk to public health and safety. The specific discussion is in NUREG-1827 (NRC, 2005a)

4.5 TRAINING COMMITMENTS

The design and implementation of the radiation protection training program complies with the requirements of 10 CFR 19.12 (CFR, 2008i). Records are maintained in accordance with 10 CFR 20.2110 (CFR, 2008j). The development and implementation of the radiation protection training program is consistent with the guidance provided in the following regulatory guidance documents:

- Regulatory Guide 8.10-Operating Philosophy for Maintaining Occupational Radiation Exposures As Low As Is Reasonably Achievable (NRC, 1977)
- Regulatory Guide 8.13-Instructions Concerning Prenatal Radiation Exposure (NRC, 1999a)
- Regulatory Guide 8.29-Instructions Concerning Risks From Occupational Radiation Exposure (NRC, 1996)
- ASTM C986-89-Developing Training Programs in the Nuclear Fuel Cycle (ASTM, 1989)
- ASTM E1168-95-Radiological Protection Training for Nuclear Facility Workers (ASTM, 1995).

All personnel and visitors entering Restricted Areas or Controlled Areas, as defined below, receive training that is commensurate with the radiological hazard to which they may be exposed. Alternatively, visitors will be provided with trained escorts who have received radiation protection training.

The level of radiation protection training is based on the potential radiological health risks associated with an employee's work responsibilities and incorporates the provisions of 10 CFR 19.12 (CFR, 2008i). In accordance with 10 CFR 19.12 (CFR, 2008i), any individual working at the facility who is likely to receive in a year a dose in excess of 1 mSv (100 mrem) is:

- Kept informed of the storage, transfer, or use of radioactive material
- Instructed in the health protection problems associated with exposure to radiation and radioactive material, in precautions or procedures to minimize exposure, and in the purposes and functions of protective devices employed
- Required to observe, to the extent within the worker's control, the applicable provisions of the NRC regulations and licenses for the protection of personnel from exposure to radiation and radioactive material
- Instructed of their responsibility to report promptly to the facility management, any condition which may cause a violation of NRC regulations and licenses or unnecessary exposure to radiation and radioactive material
- Instructed in the appropriate response to warnings made in the event of any unusual occurrence or malfunction that may involve exposure to radiation and radioactive material
- Advised of the various notifications and reports to individuals that a worker may request in accordance with 10 CFR 19.13 (CFR, 2008k).

The radiation protection training program takes into consideration a worker's normally assigned work activities. Abnormal situations involving exposure to radiation and radioactive material, which can reasonably be expected to occur during the life of the facility, are also evaluated and factored into the training. The extent of these instructions is commensurate with the potential radiological health protection problems present in the work place.

Retraining of personnel previously trained is performed for radiological, chemical, industrial, and criticality safety at least annually. The retraining program also includes procedure changes and updating and changes in required skills. Changes to training are implemented, when required, due to incidents potentially compromising safety or if changes are made to the facility or processes. Records of training are maintained in accordance with the EREF records management system. Training programs are established in accordance with Section 11.3, Training and Qualifications. The radiation protection sections of the training program are evaluated at least annually. The program content is reviewed to ensure it remains current and adequate to assure worker safety.

The specifics of the Radiation Protection Training are described in the following section.

4.5.1 Radiation Protection Training

Radiation protection training is highlighted to emphasize the high level of importance placed on the radiological safety of plant personnel and the public. In-depth radiation protection training is provided for the various types of job functions (e.g., production operator, radiation protection technician, contractor personnel) commensurate with the radiation safety responsibilities associated with each such position. Visitors to a Restricted Area are trained in the formal training program or are escorted by trained personnel while in the Restricted Area.

Personnel access procedures ensure the completion of formal nuclear safety training prior to permitting unescorted access into the Restricted Areas. Training sessions covering criticality safety, radiation protection and emergency procedures are conducted on a regular basis to accommodate new employees or those requiring retraining. Retraining is conducted when necessary to address changes in policies, procedures, requirements and the ISA.

Specific topics covered in the training program are listed in Chapter 11, Management Measures, Section 11.3.3.1.1. The training provided includes the requirements of 10 CFR 19 (CFR, 2008a).

Individuals attending these sessions must pass an initial examination covering the training contents to assure the understanding and effectiveness of the training. The effectiveness and adequacy of the training program curriculum and instructors are also evaluated by audits performed by operational area personnel responsible for criticality safety and radiation protection.

Since contractor employees may perform diverse tasks in the Restricted Areas or Controlled Areas of the facility, formal training for these employees is designed to address the type of work they perform. In addition to applicable radiation safety topics, training contents may include RWPs, special bioassay sampling, and special precautions for welding, cutting, and grinding. Instructors certified by the Radiation Protection/Chemistry Manager conduct the radiation protection training programs.

The Radiation Protection/Chemistry Manager is responsible for establishing and maintaining the radiation protection training for all personnel, including contractor personnel who may be working at the facility. Records are maintained by the Training Manager for each employee documenting the training date, scope of the training, identity of the trainer(s), any test results and other associated information.

Individuals requiring unescorted access to a Restricted Area receive annual retraining. Contents of the formal radiation protection training program are reviewed and updated as required at least annually by the EHS&L Manager or Radiation Protection/Chemistry Manager to ensure that the programs are current and adequate.

4.6 VENTILATION AND RESPIRATORY PROTECTION PROGRAMS COMMITMENTS

The regulations contained in 10 CFR 20 (CFR, 2008b), Subpart H, define the required elements of the facility respiratory protection and ventilation programs. This section describes the design and management measures taken to ensure that the installed ventilation and containment systems operate effectively. This section also describes the worker respiratory protection program.

The design of the ventilation and respiratory protection programs is consistent with the guidance contained in the following documents:

- Regulatory Guide 8.24-Health Physics Surveys During Enriched Uranium-235 Processing and Fuel Fabrication (NRC, 1979)
- ANSI N510-1989-Testing of Nuclear Air Cleaning Systems (ANSI, 1989b)
- DOE Nuclear Air Cleaning Handbook (DOE, 2003)
- NCRP Report No. 59-Operational Radiation Safety Program (NCRP, 1978)
- Regulatory Guide 8.15-Acceptable Programs for Respiratory Protection (NRC, 1999b)
- ANSI Z88.2-1992-Practices for Respiratory Protection (ANSI, 1992).

4.6.1 Ventilation Program

The confinement of uranium and the attenuation of its associated radiation are a design requirement for the facility. The internal radiation exposure of workers is controlled primarily by the containment of UF_6 within process equipment. The entire UF_6 enrichment process, except for liquid sampling, is operated under a partial vacuum so that leaks are into the system and not into work areas.

Ventilation systems for the various buildings control the temperature and the humidity of the air inside the building. The ventilation systems serving normally non-contaminated areas exhaust approximately 10% of the air handled to the atmosphere. Ventilation systems serving potentially contaminated areas include design features that provide for confinement of radiological contamination. Ventilation systems for potentially contaminated areas (e.g., the Ventilated Room and Decontamination Workshop) exhaust 100% of the air handled to the environment through the exhaust vents. All air released from potentially contaminated areas is filtered to remove radioactive particulates before it is released. The ventilation systems for potentially contaminated areas are designed to maintain the potentially contaminated areas at a slightly negative pressure relative to the uncontaminated areas. This ensures that the airflow direction is from areas of little or no contamination to areas of higher contamination.

Process vents from each of the Separations Building Modules are collected by the individual Separations Building Gaseous Effluent Vent Systems (GEVS). Some areas of the Technical Support Building (TSB) also have fume hoods that are connected to the TSB GEVS. Air released from the Centrifuge Test Facility and the Centrifuge Post Mortem Facilities is filtered by the Centrifuge Test and Post Mortem Facilities Exhaust Filtration System prior to release. A GEVS is also provided for these facilities. The systems operate slightly below atmospheric pressure to remove potentially hazardous vapors and particulate from confined areas of the plant. The systems contain particulate and carbon adsorption filters to remove radioactive materials from the gas stream prior to release from the plant. Continuous HF monitors are

provided upstream of the filters with high level alarms to inform operators of UF_6 releases in the plant.

Normal operation of the facility will not result in a release of radioactive material that exceeds regulatory limits. Ventilation systems for areas that do not have the potential for contamination are not monitored for radioactivity because radioactive material is not handled or processed in these areas. No emergency ventilation systems are provided for operation when the normal ventilation systems are shut down.

Several measures are in place to ensure effective operation of the ventilation systems. Differential pressure across High Efficiency Particulate Air (HEPA) filters in potentially contaminated ventilation exhaust systems is monitored monthly or automatically monitored and alarmed. Operating procedures specify limits and setpoints on the differential pressure consistent with manufacturers' recommendations. Filters are changed if they fail to function properly or if the differential pressure exceeds the manufacturers' ratings.

Filter inspection, testing, maintenance and change out criteria are specified in written procedures approved by the Operations Manager, or a designated alternate. Change out frequency is based on considerations of filter loading, operating experience, differential pressure data and any UF_6 releases indicated by HF alarms.

Gloveboxes are designed to maintain a negative differential pressure of about 0.623 mbar (0.25 in H_2O). This differential pressure is maintained anytime that the glovebox is in use. If the differential pressure is lost, use of the glovebox is suspended until the required differential pressure is restored.

Air flow rates at exhausted enclosures and close-capture points, when in use, are adequate to preclude escape of airborne uranium and minimize the potential for intake by workers. Air flow rates are checked monthly when in use and after modification of any hood, exhausted enclosure, close-capture point equipment or ventilation system serving these barriers. The various programs that pertain to preventive and corrective maintenance are described in Chapter 11, Sections 11.2.2, Corrective Maintenance and 11.2.3, Preventive Maintenance respectively.

Ventilation and containment systems (serving contaminated and potentially contaminated areas of the facility) will be designed and sized appropriately to reduce airborne concentrations below the occupational, derived air concentration (DAC) values specified in 10 CFR 20, Appendix B, during normal operations.

4.6.2 Respiratory Protection Program

The facility uses process and engineering controls to control the concentration of radioactive material in air. However, there may be instances when it is not practical to apply process or other engineering controls. When it is not possible to control the concentrations of radioactive material in the air to values below those that define an airborne radioactivity area, other means are implemented to maintain the total effective dose equivalent ALARA. In these cases, the ALARA goal is met by an increase in monitoring and the limitation of intakes by one or more of the following means:

- Control of access
- Limitation of exposure times
- Use of respiratory protection equipment

- Other controls, as available and appropriate.

If an ALARA analysis is performed to determine whether or not respirators should be used, safety factors other than radiological factors may be considered. The impact of respirator use on workers' industrial health and safety is factored into decisions to use respirators.

If the decision is made to permit the use of respiratory protection equipment to limit the intake of radioactive material, only National Institute of Occupational Safety and Health (NIOSH) certified equipment is used. The respiratory protection program meets the requirements of 10 CFR 20 (CFR, 2008b), Subpart H (Respiratory Protection and Controls to Restrict Internal Exposure in Restricted Areas).

The respiratory protection program includes the following elements:

- Air sampling to identify the potential hazard, select proper equipment and estimate doses
- Surveys and, when necessary, bioassays to evaluate actual intakes
- Performance testing of respirators for operability (user seal check for face sealing devices and functional check for others) immediately prior to each use
- Written procedures for the following:
    1. Monitoring, including air sampling and bioassays
    2. Supervision and training of respirator users
    3. Fit testing
    4. Respirator selection
    5. Breathing air quality
    6. Inventory and control
    7. Storage, issuance, maintenance, repair, testing, and quality assurance of respiratory protection equipment
    8. Record keeping
    9. Limitations on periods of respirator use and relief from respirator use.
- Determination by a physician that the individual user is medically fit to use respiratory protection equipment:
    1. Before the initial fitting of a face sealing respirator
    2. Before the first field use of non-face sealing respirators
    3. Either every 12 months thereafter, or periodically at a frequency determined by a physician.
- A respirator fit test requires a minimum fit factor of at least 10 times the Assigned Protection Factor (APF) for negative pressure devices, and a fit factor of at least 500 times the APF for any positive pressure, continuous flow, and pressure-demand devices. The fit testing is performed before the first field use of tight fitting, face-sealing respirators. Subsequent testing is performed at least annually thereafter. Fit testing must be performed with the facepiece operating in the negative pressure mode.
    1. Each user is informed that they may leave the area at any time for relief from respirator use in the event of equipment malfunction, physical or psychological distress,

procedural or communication failure, significant deterioration of operating conditions, or any other conditions that might require such relief.

2. In the selection and use of respirators, the facility provides for vision correction, adequate communication, low temperature work environments, and the concurrent use of other safety or radiological protection equipment. Radiological protection equipment is used in such a way as not to interfere with the proper operation of the respirator.

3. Standby rescue persons are used whenever one-piece atmosphere-supplying suits are in use. Standby rescue personnel are also used when any combination of supplied air respiratory protection device and personnel protective equipment is in use that presents difficulty for the wearer to remove the equipment. The standby personnel are equipped with respiratory protection devices or other apparatus appropriate for the potential hazards. The standby rescue personnel observe and maintain continuous communication with the workers (visual, voice, signal line, telephone, radio, or other suitable means). The rescue personnel are immediately available to assist the workers in case of a failure of the air supply or for any other emergency. The Radiation Protection/Chemistry Manager, in consultation with the EHS&L Manager, specifies the number of standby rescue personnel that must be immediately available to assist all users of this type of equipment and to provide effective emergency rescue if needed.

4. Atmosphere-supplying respirators are supplied with respirable air of quality that meets or exceeds the specifications of the Compressed Gas Association in its publications G-7.1, "Commodity Specification for Air," (CGA, 2004a) and G-7, “Compressed Air for Human Respiration,” (CGA, 2004b) as well as the requirements included in the regulations of the Occupational Safety and Health Administration (29 CFR 1910.134(i)(1)(ii)(A) through (E) (CFR, 2008l).

5. No objects, materials or substances (such as facial hair), or any conditions that interfere with the face-to-facepiece seal or valve function, and that are under the control of the respirator wearer, are allowed between the skin of the wearer's face and the sealing surface of a tight-fitting respirator facepiece.

The dose to individuals from the intake of airborne radioactive material is estimated by dividing the ambient air concentration outside the respirator by the assigned protection factor. If the actual dose is later found to be greater than that estimated initially, the corrected value is used. If the dose is later found to be less than the estimated dose, the lower corrected value may be used.

Records of the respiratory protection program (including training for respirator use and maintenance) are maintained in accordance with the facility records management program as described in Section 11.7, Records Management. Respiratory protection procedures are revised as necessary whenever changes are made to the facility, processing or equipment.

4.7 RADIATION SURVEYS AND MONITORING PROGRAMS COMMITMENTS

Radiation surveys are conducted for two purposes: (1) to ascertain radiation levels, concentrations of radioactive materials, and potential radiological hazards that could be present in the facility; and (2) to detect releases of radioactive material from facility equipment and operations. Radiation surveys will focus on those areas of the facility identified in the ISA where the occupational radiation dose limits could potentially be exceeded. Measurements of airborne radioactive material and/or bioassays are used to determine that internal occupational exposures to radiation do not exceed the dose limits specified in 10 CFR 20 (CFR, 2008b), Subpart C.

To assure compliance with the requirements of 10 CFR 20 (CFR, 2008b) Subpart F, there are written procedures for the radiation survey and monitoring programs. The radiation survey and monitoring programs assure compliance with the requirements of 10 CFR 20 (CFR, 2008b) Subpart F (Surveys and Monitoring), Subpart C (Occupational Dose Limits), Subpart L (Records) and Subpart M (Reports).

The radiation survey and monitoring programs are consistent with the guidance provided in the following references:

- Regulatory Guide 8.2-Guide for Administrative Practice in Radiation Monitoring (NRC,1973a)
- Regulatory Guide 8.4-Direct-Reading and Indirect-Reading Pocket Dosimeters (NRC,1973b)
- Regulatory Guide 8.7- Instructions for Recording and Reporting Occupational Radiation Exposure Data, Rev. 2 (NRC, 2005b)
- Regulatory Guide 8.9-Acceptable Concepts, Models, Equations, and Assumptions for a Bioassay Program (NRC,1993f)
- Regulatory Guide 8.24-Health Physics Surveys During Enriched Uranium-235 Processing and Fuel Fabrication (NRC,1979)
- Regulatory Guide 8.25-Air Sampling in the Workplace (NRC, 1992a)
- Regulatory Guide 8.34-Monitoring Criteria and Methods To Calculate Occupational Radiation Doses (NRC, 1992b)
- NUREG-1400-Air Sampling in the Workplace (NRC, 1993a)
- ANSI N13.1-1999, Guide to Sampling Airborne Radioactive Materials in Nuclear Facilities, (ANSI, 1999)
- ANSI N323-1978-Radiation Protection Instrumentation Test and Calibration (ANSI,1978)
- ANSI N13.11-2001-Dosimetry-Personnel Dosimetry Performance-Criteria for Testing (ANSI, 2001)
- ANSI/HPS N13.22-1995-Bioassay Program for Uranium (ANSI,1995)
- ANSI N13.27-1981-Performance Requirements for Pocket-Sized Alarm Dosimeters and Alarm Ratemeters (ANSI,1981)
- ANSI/HPS N13.30-1996-Performance Criteria for Radiobioassay (ANSI,1996)
- ANSI N13.6-1966 (R1989), Practice for Occupational Radiation Exposure Records Systems (ANSI,1989a)

The procedures include an outline of the program objectives, sampling procedures and data analysis methods. Equipment selection is based on the type of radiation being monitored. Procedures are prepared for each of the instruments used and specify the frequency and method of calibration. Maintenance and calibration are in accordance with the manufacturers' recommendations. Specific types of instruments used in the facility are discussed below.

The survey program procedures also specify the frequency of measurements and record keeping and reporting requirements. As stated in Section 4.1, Commitment to Radiation Protection Program Implementation, the facility corrective action process is implemented if: (1) personnel dose monitoring results or personnel contamination levels exceed the administrative personnel limits; or if an incident results in airborne occupational exposures exceeding the administrative limits, or (2) the dose limits in 10 CFR 20, Appendix B (CFR, 2008m) or 10 CFR 70.61 (CFR, 2008e) are exceeded. In the event the occupational dose limits given in 10 CFR 20 (CFR, 2008b), Subpart C are exceeded, notification of the NRC is in accordance with the requirements of 10 CFR 20, Subpart M-Reports (CFR, 2008v).

All personnel who enter Restricted Areas (as defined below) are required to wear personnel monitoring devices that are supplied by a vendor that holds dosimetry accreditation from the National Voluntary Laboratory Accreditation Program. In addition, personnel are required to monitor themselves prior to exiting Restricted Areas which may have the potential for contamination.

Continuous airborne radioactivity monitors provide indication of the airborne activity levels in the Restricted Areas of the facility. Monitoring instruments for airborne alpha emitters are provided at different locations throughout facility. These monitors are designed to detect alpha emitters in the air, which would indicate the potential for uranium contamination. When deemed necessary, portable air samplers may be used to collect a sample on filter paper for subsequent analysis in the laboratory.

Monitor data is collected for regular analysis and documentation. Monitors in locations classified as Airborne Radioactivity Areas are equipped with alarms. The alarm is activated when airborne radioactivity levels exceed predetermined limits. The limits are set with consideration being given to both toxicity and radioactivity. The volume of air sampled may have to be adjusted to ensure adequate sensitivity with minimum sampling time. The operating history of the facility, changes in technology, changes in room functions and design, and changes in regulations may necessitate adjustment of the monitors.

Continuous monitoring of direct radiation exposure rates is not performed because the uranium processed in the facility is handled in closed containers. The radionuclides of interest are primarily alpha and beta emitters. The decay data and decay chains for these radionuclides are shown in Table 4.7-1, Radiation Emitted from Natural UF_6 Feed, and Figure 4.7-1, Uranium and Decay Products of Interest, respectively.

Alpha and beta radiation cannot penetrate the container walls. Typical area radiation monitors measure gamma radiation. At this facility, the gamma radiation is not present at sufficient levels to provide representative indications. Instead, periodic radiation monitoring is performed with portable survey meters and "wipe tests" for contaminations are taken to evaluate radiological conditions in the facility.

A calibration is performed in accordance with written established procedures and documented prior to the initial use of each airflow measurement instrument (used to measure flow rates for air or effluent sampling) and each radioactivity measurement instrument. Periodic operability checks are performed in accordance with written established procedures. Calibrations are performed and documented on each airflow measurement and radioactivity measurement

instrument at least annually (or according to manufacturers' recommendations, whichever is more frequent) or after failing an operability check, or after modifications or repairs to the instrument that could affect its proper response, or when it is believed that the instrument has been damaged.

Unreliable instruments are removed from service until repairs are completed. Portal monitors, hand and foot monitors and friskers have the required sensitivity to detect alpha contamination on personnel to ensure that radioactive materials do not spread to the areas outside the Restricted Areas. Instruments are calibrated with sources that are within ±5% of the reference value and are traceable to the National Institute of Standards and Technology or equivalent.

The background and efficiency of laboratory counting instruments, when used for radiation protection purposes, is determined daily. This determination may be less frequent only if necessary due to long counting intervals.

The subject matter discussed above is identical to the National Enrichment Facility SAR (LES, 2005) subject matter with the exception that ANSI N13.15 has been deleted based on the EREF's commitment to the later version of ANSI N13.11. The NRC staff previously reviewed the National Enrichment Facility SAR (LES, 2005) application relative to the general guidelines of the occupational radiation protection program and concluded that the descriptions, specifications or analyses provided an adequate basis for safety review of the facility operations and that the construction and operation of the facility would not pose an undue risk to public health and safety. The specific discussion is in NUREG-1827 (NRC, 2005a).

4.7.1 Radiological Zones

Radiological zones within the facility have been established to (1) control the spread of contamination, (2) control personnel access to avoid unnecessary exposure of personnel to radiation, and (3) to control access to radioactive sources present in the facility. Table 4.1-2, Estimated Dose Rates, lists general dose rate estimates for the facility. These dose estimates were prepared based upon historical data from similar operating centrifuge enrichment facilities. Areas associated with higher dose rates may be restricted from public access, as determined by facility management. Areas where facility personnel spend substantial amounts of time are designed to minimize the exposure received when routine tasks are performed, in accordance with the ALARA principle.

The following definitions of areas are provided to describe how the facility Radiation Protection Program is implemented to protect workers and the general public on the site.

4.7.1.1 Unrestricted Area

NRC regulation 10 CFR 20.1003 (CFR, 2008n) defines an unrestricted area as an area, access to which is neither limited nor controlled by the licensee. The area adjacent to the facility site where the EREF does not normally exercise access control is an Unrestricted Area. This area can be accessed by members of the public, indigenous wildlife, or by facility personnel. The Unrestricted Area is governed by the limits in 10 CFR 20.1301 (CFR, 2008o). The total effective dose equivalent to individual members of the public from the licensed operation may not exceed 1 mSv (100 mrem) in a year (exclusive of background radiation). The dose in any Unrestricted Area from external sources may not exceed 0.02 mSv (2 mrem) in any one hour. In addition to the NRC limit, the Environmental Protection Agency, in 40 CFR 190 (CFR, 2008p), imposes annual dose equivalent limits of 0.25 mSv (25 mrem) to the whole body, 0.75 mSv (75 mrem) to the thyroid, and 0.25 mSv (25 mrem) to any other organ of any member of the public as the

result of exposures to planned discharges of radioactive materials to the general environment from uranium fuel cycle operations and to radiation from these operations.

4.7.1.2 Restricted Area

The NRC defines a restricted area as an area, access to which is limited by the licensee for the purpose of protecting individuals against undue risks from exposure to radiation and radioactive materials. Access to and egress from a Restricted Area at the plant site is through a radiation protection control point known as a Monitor Station. Monitoring equipment is located at these egress points. All personnel are required to monitor themselves prior to exiting Restricted Areas that have the potential for contamination, using monitoring instruments that detect gross alpha contamination.

Examples of Restricted Areas include storage areas for UF_6 in the Cylinder Receipt and Shipping Building and the potentially contaminated areas in the Technical Support Building. Personnel who have not been trained in radiation protection procedures are not allowed to access a Restricted Area without escort by trained personnel.

The areas defined below may exist within a Restricted Area. These areas may be temporary or permanent. The areas are posted to inform workers of the potential hazard in the area and to help prevent the spread of contamination. These areas are conspicuously posted in accordance with the requirements of 10 CFR 20.1902 (CFR, 2008q).

- An area in which radiation levels could result in an individual receiving a dose equivalent in excess of 0.05 mSv (0.005 rem) “in 1 hour at 30 centimeters” from the radiation source or from any surface that the radiation penetrates is designated a “Radiation Area” as defined in 10 CFR 20.1003 (CFR, 2008n).
- As defined in 10 CFR 20.1003 (CFR, 2008n), “Airborne Radioactivity Area” means a room, enclosure, or area in which airborne radioactive materials, composed wholly or partly of licensed material, exist in concentrations: (1) In excess of the derived air concentrations (DACs) specified in appendix B to 10 CFR 20.1001 - 20.2401, or (2) To such a degree that an individual present in the area without respiratory protective equipment could exceed, during the hours an individual is present in a week, an intake of 0.6 percent of the annual limit on intake (ALI) or 12 DAC-hours. Note that entry into this area does not automatically require the wearing of a respirator.
- A “High Radiation Area” as defined in 10 CFR 20.1003 (CFR, 2008n), is an area, accessible to individuals, in which radiation levels could result in an individual receiving a dose equivalent in excess of 1 mSv (0.1 rem) “in 1 hour at 30 centimeters” from the radiation source or from any surface that the radiation penetrates. No examples of this type of area are expected during routine operation of the facility. This designation is provided here only for the purposes of emergency situations (drills and actual).
- The EREF defines a “Contaminated Area” as an area where removable contamination levels are greater than 0.33 Bq/100 cm^2 (20 dpm/100 cm^2) of alpha activity or 16.7 Bq/100 cm^2 (1,000 dpm/100 cm^2) beta/gamma activity.

The NRC limits the soluble uranium intake of an individual to 10 milligrams in a week in consideration of chemical toxicity. The EREF posts areas where the intake of soluble uranium in one week is likely to exceed 1 milligram, if respiratory protection is not utilized.

4.7.1.3 Controlled Area

In 10 CFR 20.1003 (CFR, 2008n), the NRC defines a “Controlled Area” as an area, outside of a Restricted Area but inside the site boundary, access to which can be limited by the licensee for any reason. The area of the plant within the perimeter fence but outside any Restricted Area is part of the Controlled Area. Due to the presence of the owner controlled area fence, members of the public do not have direct access to this Controlled Area of the site and must be processed by security and authorized to enter the site. Training for access to a Controlled Area is provided commensurate with the radiological hazard.

Site visitors include delivery people, tour guests and service personnel who are temporary, transient occupants of the Controlled Area. Area monitoring demonstrates compliance with public exposure limits for such visitors. All individuals who are contractor or EREF employees and who work only in the Controlled Area are subject to the exposure limits for members of the public as stated in 10 CFR 20.1301 (CFR, 2008o).

4.7.2 Access and Egress Control

The facility establishes and implements an access control program that ensures that (a) signs, labels, and other access controls are properly posted and operative, (b) restricted areas are established to prevent the spread of contamination and are identified with appropriate signs, and (c) step-off pads, change facilities, protective clothing facilities, and personnel monitoring instruments are provided in sufficient quantities and locations.

Because there are no High Radiation Areas in the facility, there are no areas where access is physically prevented due to radiation level. Access control is by administrative methods. Access to certain areas may be physically prevented for security reasons. Personnel who have not been trained in radiation protection procedures are not allowed access to a Restricted Area without escort by other trained personnel.

Access to and egress from a Restricted Area is through one of the monitor stations at the particular Restricted Area boundary. Access to and egress from each Radiation Area, Contaminated Area or Airborne Radioactivity Area within a Restricted Area may also be individually controlled. A contamination monitor (e.g., frisker, hand and foot monitor or portal monitor, step-off pad and container for any discarded protective clothing may be provided at the egress point from certain of these areas to prevent the spread of contamination.

Action levels for skin and personal clothing contamination at the point of egress from Restricted Areas and any additional designated areas within the Restricted Area (e.g., a Contaminated Area which is provided with a step-off pad and contamination monitor) shall not exceed 2.5 Bq/100 cm^2 (150 dpm/100 cm^2) alpha or beta/gamma contamination (corrected for background). Clothing contaminated above egress limits shall not be released unless it can be laundered to within these limits. If skin or other parts of the body are contaminated above egress limits, reasonable steps that exclude abrasion or other damage shall be undertaken to effect decontamination.

4.7.3 Posting for Radiation Protection Awareness

Restricted Areas and other areas within the Restricted Areas (e.g., Airborne Radioactivity Area) are clearly identified by physical means such as placarding or boundary marking, so that facility personnel can identify these areas and use their training to minimize their exposure. This identification is done in accordance with 10 CFR 20.1902 (CFR, 2008q). The radiation and contamination levels from the most recent survey are clearly noted on each posting.

4.7.4 Protective Clothing and Equipment

The proper use of protective clothing and equipment can minimize internal and external exposures to radioactivity. Personnel working in areas that are classified as Airborne Radioactivity Areas or in Contaminated Areas must wear appropriate protective clothing. If the areas containing the surface contamination can be isolated from adjacent work areas via a barrier such that dispersible material is not likely to be transferred beyond the area of contamination, personnel working in the adjacent area are not required to wear protective clothing. Areas requiring protective clothing are posted at each of their entry points.

Radiation protection management and associated technical staff are responsible for determining the need for protective clothing in each work area. Areas requiring protective clothing are identified by posting signs at all area entry points.

4.7.5 Personnel Monitoring for External Exposures

External exposures are received primarily from the radioactive decay products of ^{235}U and ^{238}U. Most notably these progeny are ^{231}Th (several gammas, all low energy and low abundance), ^{234}Th (several gammas, most low abundance and low energy), and ^{234}Pa and ^{234m}Pa (many gammas, variable abundance, low and high energy). The ^{234m}Pa is the primary gamma source and is expected to contribute to a significant portion of the external exposure.

Over the life of the facility, the number of full depleted uranium tails cylinders placed on the storage pads may increase to the pads' design capacity. In addition, the facility may reach its design capacity of feed and product cylinders. As a result, it is possible that the neutron contribution to the total worker dose may require monitoring. The neutrons are due to spontaneous fission in uranium as well as the alpha, neutron reaction on fluorine. Workers receive training regarding ALARA concepts such as time-distance-shielding to minimize their exposures.

All personnel whose duties require them to enter Restricted Areas wear individual external dosimetry devices, e.g., passive dosimeters such as thermoluminescent dosimeters (TLDs) that are sensitive to beta, gamma and neutron radiation. External dosimetry devices are evaluated at least quarterly to ascertain external exposures. Administrative limits on radiation exposure are provided in Table 4.1-1, Occupational Administrative Radiation Exposure Limits.

If 25% of the annual administrative limit (i.e., 2.5 mSv or 0.250 rem) is exceeded in any quarter, then an investigation is performed and documented to determine what types of activities may have contributed to the worker's external exposure. The administrative limit already reflects ALARA principles, so this action level is appropriate. This investigation may include, but is not limited to procedural reviews, efficiency studies of the air handling system, cylinder storage protocol, and work practices.

Anytime an administrative limit is exceeded, the Radiation Protection/Chemistry Manager is informed. The Radiation Protection/Chemistry Manager is responsible for determining the need for and recommending investigations or corrective actions to the responsible Manager(s). Copies of the Radiation Protection/Chemistry Manager’s recommendations are provided to the Safety Review Committee.

The subject matter discussed above is identical to the National Enrichment Facility SAR (LES, 2005) subject matter with the exception that some organizational titles have been changed. Although some titles have been changed, the functions to be performed remain the same. Refer to Chapter 2.0 for additional information regarding these differences. The NRC staff previously reviewed the National Enrichment Facility SAR (LES, 2005) application relative to the

general guidelines of the occupational radiation protection program and concluded that the descriptions, specifications or analyses provided an adequate basis for safety review of the facility operations and that the construction and operation of the facility would not pose an undue risk to public health and safety. The specific discussion is in NUREG-1827 (NRC, 2005a).

4.7.6 Personnel Monitoring for Internal Exposures

Internal exposures for all personnel wearing external dosimetry devices are evaluated via direct bioassay (e.g. in vivo body counting), indirect bioassay (e.g., urinalysis), or an equivalent technique. For soluble (Class D) uranium, 10 CFR 20.1201(e) (CFR, 2008f) limits worker intake to no more than 10 milligrams (mg) of soluble uranium in a week. This is to protect workers from the toxic chemical effects of inhaling Class D uranium. The facility annual administrative limit for the Total Effective Dose Equivalent (TEDE) is 10 mSv (1.0 rem). Internal doses are evaluated at least annually.

The subject matter discussed above is identical to the National Enrichment Facility SAR (LES, 2005) subject matter. The NRC staff previously reviewed the National Enrichment Facility SAR (LES, 2005) application relative to the general guidelines of the occupational radiation protection program and concluded that the descriptions, specifications or analyses provided an adequate basis for safety review of the facility operations and that the construction and operation of the facility would not pose an undue risk to public health and safety. The specific discussion is in NUREG-1827 (NRC, 2005a)

Continuous air monitoring in Airborne Radioactivity Areas may be performed to complement the bioassay program. Alarm setpoints on the continuous air monitors in the Airborne Radioactivity Areas may be used to provide an indication that internal exposures may be approaching the action limit.

If the facility annual administrative limit is exceeded as determined from bioassay results, then an investigation is performed and documented to determine what types of activities may have contributed to the worker's internal exposure. The action limit is based on ALARA principles. Other factors such as the biological elimination of uranium are considered. This investigation may include, but is not limited to procedural reviews, efficiency studies of the air handling system, and work practices.

4.7.7 Evaluation of Doses

Dose evaluations may be performed at more frequent intervals and should be performed when reasonable suspicion exists regarding an abnormal exposure. The internal and external exposure values are summed in accordance with 10 CFR 20.1202 (CFR, 2008r). Procedures for the evaluation and summation of doses are based on the guidance contained in Regulatory Guides 8.7 (NRC, 2005b) and 8.34 (NRC, 1992b).

4.7.8 Monitor Stations

Monitor stations are the entry and exit points for Restricted Areas. Monitors are provided to detect radioactive contamination on personnel and their personal items, including hard hats. All personnel are required to monitor themselves, any hand-carried personal items, and hard hats prior to exiting a Restricted Area. Radiation protection management is responsible for Monitor Station provision and maintenance. Figure 4.7-2, Projected Radiological Zones shows the

anticipated Restricted Areas. Monitor Station locations are evaluated and moved as necessary in response to changes in the facility radiological conditions.

4.7.9 Locker Rooms

Locker rooms for men and women are provided for personnel to change into appropriate work clothing and store personal belongings. The following facilities are provided for in the locker room area:

- Shower Rooms - shower rooms for men and women are provided as a place for personnel to wash/clean up after work. These shower rooms are not intended for personnel decontamination.
- Restrooms - restrooms for men and women are provided. These rooms are not for personnel decontamination.
- First Aid Station - a first aid station is provided to treat injured personnel.
- Information Area - an information area is provided to notify personnel of information important to radiation protection.

4.7.10 Storage Areas

Storage areas are provided for the following items:

- Protective (i.e., anti-contamination) clothing
- Respiratory protection equipment
- Shower rooms supplies
- Radiation protection supplies.

4.8 CONTAMINATION AND RADIATION CONTROL

The goal of maintaining occupational internal and external radiation exposures ALARA encompasses the individual's dose as well as the collective dose of the entire working population. Since the total effective dose equivalent (TEDE) is the sum of the internal and external exposures, the Radiation Protection Program addresses both contamination control and external radiation protection.

Listed below are examples of design and operating considerations that are implemented at the facility to reduce personnel radiation exposures:

- The enrichment process, with the exception of the Liquid Sampling part, is maintained under subatmospheric pressure. The constant containment of UF_6 precludes direct contact with radioactive materials by personnel.
- Self-monitoring is required upon exit from Restricted Areas. Personnel are required to notify a member of the radiation protection staff if contamination is detected.
- All personnel are trained in emergency evacuation procedures in accordance with the facility Emergency Plan.
- Air flow rates at exhausted enclosures and close-capture points, when in use, are adequate to preclude escape of airborne uranium and minimize the potential for intake by workers. Air flow rates are checked monthly when in use and after modification of any hood, exhausted enclosure, close-capture point equipment or ventilation system serving these barriers.
- The Radiation Monitoring Room in the Technical Support Building (TSB) has a personnel decontamination area to handle cases of accidental radioactive contamination. A handwashing sink and a shower are provided for contamination removal.

4.8.1 Internal Exposures

Because the radionuclides present in this facility under routine operations are primarily alpha and beta emitters (with some low-energy gamma rays), the potential for significant internal exposure is greater than that for external exposure. Parameters important to determining internal doses are:

- The quantity of radioactive material taken into the body
- The chemical form of the radioactive material
- The type and half-life of radionuclide involved
- The time interval over which the material remains in the body.

The principal modes by which radioactive material can be taken into the body are:

- inhalation
- ingestion
- absorption through the skin
- injection through wounds.

4.8.1.1 Bioassay

Internal radiological exposures are evaluated at least annually, or more frequently if conditions warrant, as noted in Section 4.7.7, Evaluation of Doses. Based on the results of air sample monitoring data, bioassays are performed for all personnel who are likely to have had an intake of one milligram of uranium. This is 10% of the 10 mg in a week regulatory limit (10 CFR 20.1201(e) (CFR, 2008f)) for intake of Class D uranium. The bioassay program has a sensitivity of 5 micrograms per liter (5 µg/L) of uranium concentration, assuming that the sample is taken within ten days of the postulated intake and that at least 1.4 L of sample is available from a 24-hour sampling period. Until urinalysis results indicate less than 15 µg/L uranium concentration, workers are restricted from activities that could routinely or accidentally result in internal exposures to soluble uranium.

It might not be possible to achieve a sensitivity of 5 micrograms per liter; if for example, all reasonable attempts to obtain a 1.4 liter 24-hour sample within 10 days fail. In such a case, the sample is analyzed for uranium concentration (if measurable) and the worker's intake is estimated using other available data.

The subject matter discussed above is identical to the National Enrichment Facility SAR (LES, 2005) subject matter. The NRC staff previously reviewed the National Enrichment Facility SAR (LES, 2005) application relative to the general guidelines of the occupational radiation protection program and concluded that the descriptions, specifications or analyses provided an adequate basis for safety review of the facility operations and that the construction and operation of the facility would not pose an undue risk to public health and safety. The specific discussion is in NUREG-1827 (NRC, 2005a).

4.8.1.2 Air Monitoring and Sampling

Airborne activity in work areas is regularly determined in accordance with written procedures. Continuous air sampling in airborne radioactivity areas may be performed to complement the bioassay program. Alarm setpoints on the continuous air monitors in the airborne radioactivity areas may be used to provide an indication that internal exposures may be approaching the action limit. Using the values specified in 10 CFR 20 Appendix B (CFR, 2008m), if a worker could have inhaled radionuclide concentrations that are likely to exceed 12 DAC-hours in one week (7 days), then bioassay is conducted within 72 hours after the suspected or known exposure. Follow-up bioassay measurements are conducted to determine the committed effective dose equivalent. Until urinalysis results indicate less than 15 micrograms per liter uranium concentration, workers are restricted from activities that could routinely or accidentally result in internal exposures to soluble uranium.

Continuous air monitors for airborne alpha emitters are used to measure representative airborne concentrations of radionuclides that may be due to facility operation. On-line monitoring for gross alpha activity is performed assuming all the alpha activity is due to uranium. When airborne activity data is used for dose calculations, the assumption is that all the activity is due to 234U , class D material. The lower limit of detection is either 0.02 milligrams of uranium in the total sample or 3.7 nBq/ml (1E-13 µCi/ml) gross alpha concentration. An action level is established at 1 mg of total uranium likely to be inhaled by a worker in seven days. When deemed necessary, portable air samplers may be used to collect a sample on filter paper for subsequent analysis in the laboratory.

Continuous air monitors provide indication of the airborne activity levels in the Restricted Areas of the facility. These monitors are designed to detect alpha emitters in the air, which would indicate the potential for uranium contamination. Continuous air monitors are permanently

located in Restricted Areas. These permanent monitors are operated to collect continuous samples. Continuous air monitors in locations classified as Airborne Radioactivity Areas are equipped with alarms. The alarm is activated when airborne radioactivity levels exceed predetermined limits. The limits are set with consideration being given to both toxicity and radioactivity. The volume of air sampled may have to be adjusted to ensure adequate sensitivity with minimum sampling time. The operating history of the facility, changes in technology, changes in room functions and design, and changes in regulations may necessitate adjustment of the monitors.

When deemed necessary, portable air samplers may be used to collect a sample on filter paper for subsequent analysis in the laboratory. When air sampling is conducted using continuous air sampling devices, the filters are changed and analyzed at the following frequencies:

- Weekly and following any indication of release that might lead to airborne concentrations of uranium that are likely to exceed (1) 10% of the values listed in 10 CFR 20.1003 (CFR, 2008n), or (2) the total uranium action level of one milligram of total uranium inhaled in one week.
- Each Shift, following changes in process equipment or process control, and following detection of any event (e.g., leakage, spillage or blockage of process equipment) that are likely to exceed (1) 10% of the values listed in 10 CFR 20.1003 (CFR, 2008n), or (2) the total uranium action level of one milligram inhaled by a worker in one week.

The representativeness of the workstation continuous air samplers shall be checked annually and when significant process or equipment changes have been made. Facility procedures specify how representativeness is determined.

Plant areas surveyed as described in this section include as a minimum UF_6 processing areas, decontamination areas, waste processing areas and laboratories. Continuous air samplers may be substituted when appropriate, as when continuous monitoring may not be reasonably achieved.

Action levels are based on trending of data collected during facility operation. Investigations are performed if airborne activity:

a. Exceeds 10% of the values listed in 10 CFR 20.1003 (CFR, 2008n) for Airborne Radioactivity Areas
b. Shows a short-term increase of a factor of 10 over historical data from the previous 12 months.

Corrective actions include investigation of the adverse trend and an evaluation of the need for changes, consistent with the principles of ALARA.

4.8.2 External Exposures

As noted previously, the potential for significant external exposure to personnel under routine operating conditions is less significant than that for internal exposures. This is primarily due to the nature of the radionuclides present in the facility.

Parameters important in determining dose from external exposures are:

- The length of time the worker remains in the radiation field
- The intensity of the radiation field
- The portion of the body receiving the dose.

Historical data from European facilities of similar construction show relatively low doses compared to nuclear power plant doses.

4.8.3 Procedures

Procedures are provided in the following areas to administratively control personnel radiation exposure:

- Operation
- Design
- Maintenance
- Modification
- Decontamination
- Surveillance
- Procurement.

4.8.4 Instrumentation

Three basic types of personnel monitoring equipment are used at the facility. These are count rate meters (also known as “friskers), hand/foot monitors and portal monitors.

4.8.4.1 Friskers

These typically consist of a hand-held Thermo Scientific HP 210 (or equivalent) probe connected to an RM-25 (or equivalent) count rate meter. Instructions for the use of these instruments are posted in a prominent location near the instrument. Hand held friskers are typically placed in locations where conditions restrict the use of other monitors or for short-term use as necessary to ensure effective control of the spread of contamination.

4.8.4.2 Hand and Foot Monitors

These typically consist of multiple detectors arranged to monitor only hands and feet. Instructions for the use of these monitors are prominently posted on or near the instrument. Hand and foot monitors are used in applications where "pass-throughs" are frequent and where hand and foot monitoring is the major requirement.

4.8.4.3 Portal Monitors

Portal monitors can quickly scan large surface areas of the body. Portal monitors typically use large area beta/gamma sensitive detectors to monitor personnel passing through. Additional detectors are provided to monitor the hands, head and feet. These monitors may be used where the number of personnel exiting an area, available space, etc., makes their use advantageous.

4.8.5 Contamination Control

Small contamination areas (i.e., less than 1/4 of the room) may be roped off or otherwise segregated from the rest of a Restricted Area. Appropriate clothing and/or other equipment is

used to minimize exposure to radioactive material and prevent the spread of contamination. Provisions for monitoring contamination and airborne activity levels are discussed below. A contamination monitor (frisker), a step-off pad and a container for any discarded protective clothing may be placed at the access/egress point to the work area. The entire Restricted Area is not posted as a Contaminated Area.

4.8.5.1 Surface Contamination

Contamination survey monitoring is performed for all UF_6 process areas and areas in which uranic materials are handled or stored. Surveys include routine checks of non-UF_6 process areas, including areas normally not contaminated. Monitoring includes direct radiation and removable contamination measurements. Survey procedures are based on the potential for contamination of an area and operational experience. The Restricted Areas are surveyed at least weekly. The lunch room and change rooms are surveyed at least daily.

Removable surface contamination is considered uranium contamination that is present on a surface and that can be transferred to a dry smear paper by rubbing with moderate pressure. The facility uses various instruments such as proportional counters, alpha scintillation counters and thin window Geiger-Mueller tubes, to evaluate contamination levels.

Laundered protective clothing is periodically surveyed for gross alpha and gross beta contamination. Levels of less than 2.5 Bq/100 cm^2 (150 dpm/100 cm^2), alpha or beta/gamma are acceptable. This action level should be readily achievable since most of the radioactive material that can contaminate protective clothing at the facility is in soluble form and is easily removed by laundering. Monitoring of laundered protective clothing may be performed by the licensed commercial nuclear decontamination laundry company described in Section 4.9.2, Contaminated Laundry Program.

If surface contamination levels exceed the following levels, clean-up of the contamination is initiated within 24 hours of the completion of the analysis:

- Removable contamination: 83.3 Bq/100 cm^2 (5000 dpm/100 cm^2) alpha or beta/gamma
- Fixed contamination: 4.2 kBq/100 cm^2 (250,000 dpm/100 cm^2) alpha or beta/gamma.

The subject matter discussed above is identical to the National Enrichment Facility SAR (LES, 2005) subject matter. The NRC staff previously reviewed the National Enrichment Facility SAR (LES, 2005) application relative to the general guidelines of the occupational radiation protection program and concluded that the descriptions, specifications or analyses provided an adequate basis for safety review of the facility operations and that the construction and operation of the facility would not pose an undue risk to public health and safety. The specific discussion is in NUREG-1827 (NRC, 2005a).

4.9 MAINTENANCE AREAS – METHODS AND PROCEDURES FOR CONTAMINATION CONTROL

Designing processes and equipment that contain radioactive material to require as little maintenance as possible ensures that personnel radiation exposures are ALARA. Additional exposure reductions are achieved by:

- Removing as much radioactive material as possible from the equipment and the area prior to maintenance, thereby reducing the intensity of the radiation field
- Providing adequate space for ease of maintenance reducing the length of time required to complete the task, thereby reducing the time of exposure
- Preparing and using procedures that contain specifications for tools and equipment needed to complete the job
- Proper job planning, including practice on mockups
- Reviews of previous similar jobs
- Identification and communication of the highest contamination areas to the workers prior to the start of work.

4.9.1 Decontamination Facilities

The Decontamination Facilities at the EREF comprise five rooms:

- Chemical Trap Workshop
- Mobile Unit Disassembly and Reassembly Workshop
- Valve and Pump Dismantling Workshop
- Decontamination Workshop
- Maintenance Facility

All of the rooms are located in the TSB. The decontamination systems in the workshops are designed to remove uranium hexafluoride (UF_6) and its associated breakdown products from materials and equipment used in uranium hexafluoride systems, waste handling systems, and miscellaneous other areas of the plant. Space is provided to break down and strip contaminated equipment prior to decontamination. The workshops may also be used for the temporary storage and dismantling of failed equipment.

The only significant forms of radioactive contamination found in the facility are uranium hexafluoride (UF_6), uranium tetrafluoride (UF_4) and uranyl fluoride (UO_2F_2).

The process carried out within the Decontamination Facilities begins with receipt and storage of contaminated pumps, out-gassing, PFPE oil removal and storage, and pump stripping. Activities for the dismantling and maintenance of other plant components are also carried out. Other components commonly decontaminated besides pumps include valves, piping, instruments, sample bottles, tools, flexible hoses, and scrap metal. This area has appropriate access controls and contamination monitoring facilities.

The decontamination part of the process consists of a series of steps following equipment disassembly including degreasing and draining as necessary decontamination, drying, and inspection. Ultrasonic agitators, heated baths, including degreasing water baths, citric acid, and

deionized water are available for use. In addition, heated compressed air and ovens are available to ensure decontaminated items are totally dry.

The EREF routine contamination control procedures, including the use of radiation monitoring equipment, are implemented in these facilities. These rooms are provided with general HVAC and a ventilation exhaust system with ductwork connected to a fan/filter that exhausts filtered air to the atmosphere.

4.9.2 Contaminated Laundry

The EREF utilizes the services of a licensed commercial nuclear decontamination laundry company. The EREF implements a contaminated laundry program to ensure that contaminated and soiled clothing and other articles which have been used throughout the plant, are cleaned. Clothing and articles are taken in plastic bags from containers strategically positioned within the plant. Clean clothing and articles are delivered to storage areas located within the plant.

Laundry collection is divided into two groups: articles with high or low possibility of contamination. Expected contaminants on the laundry include slight amounts of uranyl fluoride (UO_2F_2) and uranium tetrafluoride (UF_4). Articles likely to be contaminated are collected in water absorbent bags. Articles unlikely to be contaminated are collected in bin bags and sorted into lightly and heavily soiled articles. Lightly soiled articles are shipped off-site to be laundered. Heavily soiled articles are inspected first, and if too difficult to clean, are sent to the Solid Waste Collection System. Otherwise, they are shipped off-site to be laundered as well.

Laundry is sorted on a table underneath a vent hood that is connected to the Technical Support Building (TSB) Gaseous Effluent Vent System. The Laundry Sorting Room is located in the TSB.

The licensed commercial laundry transports the plant's laundry using its own fleet of vehicles in strict adherence to applicable Department of Transportation and state regulations. The commercial laundry processes articles according to type and contamination level. The plant's garments are laundered separately from those of other customers and all process equipment is cleaned between customers, eliminating cross-contamination.

4.10 DECONTAMINATION POLICY AND PROVISIONS

Removing radioactive material from equipment, to the extent reasonably possible prior to servicing reduces exposures to personnel who work around and service contaminated equipment. Surface contamination is removed to minimize its spread to other areas of the facility. Surfaces such as floors and walls are designed to be smooth, nonporous and free of cracks so that they can be more easily decontaminated.

Decontamination facilities and procedures for the Technical Support Building and the Separations Building Modules have been previously discussed. For the remaining areas of the Separations Building decontamination requirements involve only localized clean-up at areas where maintenance has been or is being performed that involves opening a uranium-containing system. All decontamination of components removed from their systems for maintenance is performed in Technical Support Building. No other areas of the facility normally require decontamination.

The facility follows NRC Branch Technical Position: “Guidelines for Decontamination of Facilities and Equipment Prior to Release for Unrestricted Use or Termination of Licenses for Byproduct, Source, or Special Nuclear Material” (NRC, 1993e). This guide applies to the abandonment or release for unrestricted use, of surfaces, premises and equipment.

4.11 ADDITIONAL PROGRAM COMMITMENTS

The following section describes additional program commitments related to the Radiation Protection Program.

4.11.1 Leak Testing Byproduct Material Sources

In addition to the uranium processed at the facility, other sources of radioactivity are used. These sources are small calibration sources used for instrument calibration and response checking. These byproduct material sources may be in solid, liquid, or gaseous form; the sources may be sealed or unsealed. Both types of sources present a small radiation exposure risk to facility workers. Typical byproduct material quantities and uses for a uranium enrichment centrifuge plant are summarized in Table 4.11-1, Typical Quantities of Byproduct Material for a Uranium Enrichment Centrifuge Plant. The byproduct materials for the EREF will be identified during the design phase and the Safety Analysis Report will be revised accordingly. Leak-testing of sources is performed in accordance with the following NRC Branch Technical Positions (BTPs):

- License Condition for Leak-Testing Sealed Byproduct Material Sources (NRC,1993b)
- License Condition for Leak-Testing Sealed Source Which Contains Alpha and/or Beta-Gamma Emitters (NRC,1993c)
- License Condition for Leak-Testing Sealed Uranium Sources (NRC, 1993d).

4.11.2 Records and Reports

The facility meets the following regulations for the additional program commitments applicable to records and reports:

- 10 CFR 20 Subpart L-Records (CFR, 2008w), Subpart M-Reports (CFR, 2008v)
- 10 CFR 30.50 (Reporting Requirements) (CFR, 2009a)
- 10 CFR 40.60 (Reporting Requirements) (CFR, 2009b)
- Section 70.61 (Performance requirements) (CFR, 2008e)
- Section 70.74 (Additional reporting requirements) (CFR, 2008s).

The facility Records Management program is described in Section 11.7, Records Management. The facility maintains complete records of the Radiation Protection Program for at least the life of the facility.

The facility maintains records of the radiation protection program (including program provisions, audits, and reviews of the program content and implementation), radiation survey results (air sampling, bioassays, external-exposure data from monitoring of individuals, internal intakes of radioactive material), and results of corrective action program referrals, RWPs and planned special exposures.

By procedure, the facility will report to the NRC, within the time specified in 10 CFR 20.2202 (CFR, 2008t) and 10 CFR 70.74 (CFR, 2008s), any event that results in an occupational exposure to radiation exceeding the dose limits in 10 CFR 20 (CFR, 2008b). The facility will prepare and submit to the NRC an annual report of the results of individual monitoring, as required by 10 CFR 20.2206(b) (CFR, 2008u).

As previously noted in this chapter, the EREF will refer to the facility's corrective action program any radiation incident that results in an occupational exposure that exceeds the dose limits in 10 CFR 20 (CFR, 2008f), Appendix B (CFR, 2008m), or is required to be reported per 10 CFR 70.74 (CFR, 2008s). The facility reports to the NRC on both the corrective action taken (or planned) to protect against a recurrence and the proposed schedule to achieve compliance with the applicable license condition or conditions.

4.12 REFERENCES

ANSI, 1978. Radiation Protection Instrumentation Test and Calibration, ANSI N323-1978, American National Standards Institute, 1978.

ANSI, 1981. Performance Requirements for Pocket-Sized Alarm Dosimeters and Alarm Ratemeters, ANSI N13.27-1981, American National Standards Institute, 1981.

ANSI, 1989a. Practice for Occupational Radiation Exposure Records Systems, ANSI N13.6-1966 (R1989), American National Standards Institute, 1989.

ANSI, 1989b. Testing of Nuclear Air Cleaning Systems, ANSI N510-1989, American National Standards Institute, 1989.

ANSI, 1992. Practices for Respiratory Protection, ANSI Z88.2-1992, American National Standards Institute, 1992.

ANSI, 1993. Selection, Qualification and Training of Personnel for Nuclear Power Plants, ANSI 3.1-1993, American National Standards Institute, 1993.

ANSI, 1995. Bioassay Program for Uranium, ANSI/HPS N13.22-1995, American National Standards Institute, 1995.

ANSI, 1996. Performance Criteria for Radiobioassay, ANSI/HPS N13.30, American National Standards Institute, 1996.

ANSI, 1999. Guide to Sampling Airborne Radioactive Materials in Nuclear Facilities, ANSI N13.1, American National Standards Institute, 1999

ANSI, 2001. Dosimetry - Personnel Dosimetry Performance-Criteria for Testing, ANSI N13.11-2001, American National Standards Institute, 2001.

ASTM, 1989. Developing Training Programs in the Nuclear Fuel Cycle, ASTM C986-89, American Society for Testing and Materials, 1989.

ASTM, 1995. Radiological Protection Training for Nuclear Facility Workers, ASTM E1168-95, American Society for Testing and Materials, 1995.

CFR, 2008a. Title 10, Code of Federal Regulations, Part 19, Notices, Instructions, and Reports to Workers: Inspections and Investigations, 2008.

CFR, 2008b. Title 10, Code of Federal Regulations, Part 20, Standards for Protection Against Radiation, 2008.

CFR, 2008c. Title 10, Code of Federal Regulations, Part 70, Domestic Licensing of Special Nuclear Material, 2008.

CFR, 2008d. Title 10, Code of Federal Regulations, Section 20.1101, Radiation protection programs, 2008.

CFR, 2008e. Title 10, Code of Federal Regulations, Section 70.61, Performance requirements, 2008.

CFR, 2008f. Title 10, Code of Federal Regulations, Section 20.1201, Occupational dose limits for adults, 2008.

CFR, 2008g. Title 10, Code of Federal Regulations, Section 20.1208, Dose equivalent to an embryo/fetus, 2008.

CFR, 2008h. Title 10, Code of Federal Regulations, Section 70.22, Contents of applications, 2008.

CFR, 2008i. Title 10, Code of Federal Regulations, Section 19.12, Instructions to workers, 2008.

CFR, 2008j. Title 10, Code of Federal Regulations, Section 20.2110, Form of records, 2008.

CFR, 2008k. Title 10, Code of Federal Regulations, Section 19.13, Notifications and reports to individuals, 2008.

CFR, 2008l. Title 29, Code of Federal Regulations, Part 1910, Occupational Safety and Health Standards, 2008.

CFR, 2008m. Title 10, Code of Federal Regulations, Part 20, Appendix B, Annual Limits on Intakes (ALls) and Derived Air Concentrations (DACs) of Radionuclides for Occupational Exposure; Effluent Concentrations; Concentrations for Release to Sewerage, 2008.

CFR, 2008n. Title 10, Code of Federal Regulations, Section 20.1003, Definitions, 2008.

CFR, 2008o. Title 10, Code of Federal Regulations, Section 20.1301, Dose limits for individual members of the public, 2008.

CFR, 2008p. Title 40, Code of Federal Regulations, Part 190, Environmental Radiation Protection Standard For Nuclear Power Operations, 2008.

CFR, 2008q. Title 10, Code of Federal Regulation, Section 20.1902, Posting requirements, 2008.

CFR, 2008r. Title 10, Code of Federal Regulations, Section 20.1202, Compliance with requirements for summation of external and internal does, 2008.

CFR, 2008s. Title 10, Code of Federal Regulations, Section 70.74, Additional reporting requirements, 2008.

CFR, 2008t. Title 10, Code of Federal Regulations, Section 20.2202, Notification of incidents, 2008.

CFR, 2008u. Title 10, Code of Federal Regulations, Section 20.2206, Reports of individual monitoring, 2008.

CFR, 2008v. Title 10, Code of Federal Regulations, Part 20, Subpart M-Reports, 2008.

CFR, 2008w. Title 10, Code of Federal Regulations, Part 20, Subpart L-Records, 2008.

CFR, 2008x. Title 10, Code of Federal Regulations, Part 30, Rules of General Applicability to Domestic Licensing of Byproduct Material, 2008.

CFR, 2008y. Title 10, Code of Federal Regulations, Part 40, Domestic Licensing Of Source Material, 2008.

CFR, 2009a. Title 10, Code of Federal Regulations, Section 30.50, Reporting Requirements, 2009.

CFR, 2009b. Title 10, Code of Federal Regulations, Section 40.60, Reporting Requirements, 2009.

CGA, 2004a. CGA G-7.1, Commodity Specification for Air, Compressed Gas Association, 2004

CGA, 2004b. CGA G-7, Compressed Air for Human Respiration, Compressed Gas Association, 2004.

DOE, 2003. HDBK-1169-2003, Nuclear Air Cleaning Handbook, Department of Energy, 2003.

LES, 2005. "National Enrichment Facility Safety Analysis Report," Rev. 7, Louisiana Energy Services, September 2006.

NCRP, 1978. Operational Radiation Safety Program, NCRP Report No. 59, National Council on Radiation Protection and Measurements, 1978.

NCRP, 1987. Ionizing Radiation Exposure of the Population of the United States, NCRP Report No. 93, National Council on Radiation Protection and Measurements, September, 1987.

NRC, 1973a. Guide for Administrative Practice in Radiation Monitoring, Regulatory Guide 8.2, U.S. Nuclear Regulatory Commission, February 1973.

NRC, 1973b. Direct-Reading and Indirect-Reading Pocket Dosimeters, Regulatory Guide 8.4, U.S. Nuclear Regulatory Commission, February 1973.

NRC, 1977. Operating Philosophy for Maintaining Occupational Radiation Exposures As Low As Is Reasonably Achievable, Regulatory Guide 8.10 Rev. 1-R, U.S. Nuclear Regulatory Commission, May 1977.

NRC, 1979. Health Physics Surveys During Enriched Uranium-235 Processing and Fuel Fabrication, Regulatory Guide 8.24, Rev. 1, U.S. Nuclear Regulatory Commission, October 1979.

NRC, 1992a. Air Sampling in the Workplace, Regulatory Guide 8.25, Rev. 1, U.S. Nuclear Regulatory Commission, June 1992.

NRC, 1992b. Monitoring Criteria and Methods To Calculate Occupational Radiation Doses, Regulatory Guide 8.34, U.S. Nuclear Regulatory Commission, July 1992.

NRC, 1993a. Air Sampling in the Workplace, NUREG-1400, U.S. Nuclear Regulatory Commission, September 1993.

NRC, 1993b. License Condition for Leak-Testing Sealed Byproduct Material Sources, Branch Technical Position, U.S. Nuclear Regulatory Commission, April 1993.

NRC, 1993c. License Condition for Leak-Testing Sealed Sources Which Contain Alpha and/or Beta-Gamma Emitters, Branch Technical Position, U.S. Nuclear Regulatory Commission, April 1993.

NRC, 1993d. License Condition for Leak-Testing Sealed Uranium Sources, Branch Technical Position, U.S. Nuclear Regulatory Commission, April 1993.

NRC, 1993e. Guidelines for Decontamination of Facilities and Equipment Prior to Release for Unrestricted Use or Termination of Licenses for Byproduct Source or Special Nuclear Material, Branch Technical Position, U.S. Nuclear Regulatory Commission, April 1993.

NRC, 1993f. Acceptable Concepts, Models, Equations and Assumptions for a Bioassay Program, Regulatory Guide 8.9, Rev. 1, U.S. Nuclear Regulatory Commission, July 1993.

NRC, 1993g. ALARA Levels for Effluents from Materials Facilities, Regulatory Guide 8.37, U.S. Nuclear Regulatory Commission, July 1993.

NRC, 1996. Instructions Concerning Risks from Occupational Radiation Exposure, Regulatory Guide 8.29, U.S. Nuclear Regulatory Commission, February 1996.

NRC, 1999a. Instruction Concerning Prenatal Radiation Exposure, Regulatory Guide 8.13, Rev. 3; U.S. Nuclear Regulatory Commission, June 1999.

NRC, 1999b. Acceptable Programs for Respiratory Protection Regulatory Guide 8.15, U.S. Nuclear Regulatory Commission, October 1999.

NRC, 2002. Standard Review Plan for the Review of a License Application for a Fuel Cycle Facility, NUREG-1520, U.S. Nuclear Regulatory Commission, March 2002.

NRC, 2005a. NUREG- 1827, "Safety Evaluation Report for the National Enrichment Facility in Lea County, New Mexico," Docket No. 70-3103, Louisiana Energy Services, U.S. NRC, June 2005.

NRC, 2005b. Instructions for Recording and Reporting Occupational Radiation Exposure Data, Regulatory Guide 8.7, Rev. 2, U.S. Nuclear Regulatory Commission, November 2005.

NRC, 2008. Regulatory Guide 4.21, Minimization of Contamination and Radioactive Waste Generation: Life-Cycle Planning, Rev. 0, U.S. Nuclear Regulatory Commission, June 2008.

Urenco, 2003. Health, Safety and Environmental Report, Urenco (Capenhurst) Limited, 2003.

Urenco, 2004. Health, Safety and Environmental Report, Urenco (Capenhurst) Limited, 2004.

Urenco, 2005. Health, Safety and Environmental Report, Urenco (Capenhurst) Limited, 2005.

Urenco, 2006. Health, Safety and Environmental Report, Urenco (Capenhurst) Limited, 2006.

Urenco, 2007. Health, Safety and Environmental Report, Urenco (Capenhurst) Limited, 2007.

TABLES

Table 4.1-1 Occupational Administrative Radiation Exposure Limits
(Page 1 of 1)

	Administrative Limit
Total Effective Dose Equivalent (TEDE)	10 mSv/yr (1 rem/year)

Notes:

(a) Excludes accident situations.

(b) No routine extremity or skin monitoring is required.

(c) TEDE is the sum of internal dose and external dose received during routine operations.

(d) The Administrative Limit represents 20% of the NRC limit of 50 mSv/yr (5 rem/yr) given in 10 CFR 20.1201 (CFR, 2008f).

Table 4.1-2 Estimated Dose Rates
(Page 1 of 1)

Area or Component	Dose Rate, μSv/hr (mrem/hr)
Plant General Area (excluding Separations Building)	<0.1 (<0.01)
Separations Building – Cascade Halls	0.5 (0.05)
Separations Building	1 (0.1)
Empty Used UF_6 Shipping Cylinder	100 on contact (10.0) 10 at 1 meter (1.0)
Full UF_6 Shipping Cylinder	50 on contact (5.0) 2 at 1 meter (0.2)

Table 4.1-3 Estimated Individual Exposures
(Page 1 of 1)

Positiion	Annual Dose
General Office Staff	<50 μSv (<5.0 mrem)
Typical Operations & Maintenance Technician	1 mSv (100 mrem)
Typical Cylinder Handler	3 mSv (300 mrem)

Table 4.1-4 Annual Maximum and Average Worker Doses at Capenhurst (Page 1 of 1)

Year	Maximum Annual Worker Dose Equivalent, mSv (mrem)	Average Annual Worker Dose Equivalent, mSv (mrem)
2003	2.03 (203)	0.22 (22)
2004	2.57 (257)	0.31 (31)
2005	2.15 (215)	0.22 (22)
2006	2.61 (261)	0.39 (39)
2007	3.41 (341)	0.44 (44)

Table 4.7-1 Radiation Emitted from Natural UF_6 Feed
(Page 1 of 1)

Element	Nuclide Symbol	Half-Life	Maximum Radiation Energies (Mev) and Intensities (%)		
			Alpha (α)	Beta (β)	Gamma (γ)
92 uranium	^{238}U	4.5E+9 years	4.15 25% 4.20 75%	None	0.013 8.8%
90 thorium	^{231}Th	26 hours	None	0.39 ~ 100%	0.025 14.7%
90 thorium	^{234Th}	24 days	None	0.19 73% 0 10 27%	0.06 3.8% 0.09 5.4%
91 protactinium	^{234m}Pa	1.2 minutes	None	2.28 99%	0.766 0.21% 1.001 0.60%
92 uranium	^{234}U	2.5E+5 years	4.72 28% 4.78 72%	None	0.053 0.12%
92 uranium	^{235}U	7.0E+8 years	4.37 17% 4.40 55% 4.60 14%	None	0.143 12% 0.185 54% 0.205 6%

Table 4.11-1 Typical Quantities of Byproduct Material for a Uranium Enrichment Centrifuge Plant
(Page 1 of 1)

Radionuclide	Quantity	Use
^{3}H	19 GBq (5.14E-01 Ci)	Instrument calibration or response checking
^{36}Cl	8.35 kBq (2.26E-07 Ci)	Instrument calibration or response checking
^{57}Co	930 MBq (2.51 E-02 Ci)	Instrument calibration or response checking
^{90}Sr	1.04 kBq (2.81 E-08 Ci)	Instrument calibration or response checking
^{99}Tc	3.09 kBq (8.35E-08 Ci)	Instrument calibration or response checking
^{109}Cd	37 MBq (1.00E-03 Ci)	Instrument calibration or response checking
^{131}Cs	390 Bq (1.05E-08 Ci)	Instrument calibration or response checking
^{133}Ba	0.7 MBq (1.89E-05 Ci)	Instrument calibration or response checking
^{137}Cs	2.05 GBq (5.53E-02 Ci)	Instrument calibration or response checking
^{210}Po	63 MBq (1.70E-03 Ci)	Instrument calibration or response checking
^{226}Ra	38 MBq (1.03E-03 Ci)	Instrument calibration or response checking
^{233}U	3.7 GBq (1.00E-01 Ci)	Instrument calibration or response checking
^{234}U	4.4 Bq (1.19E-10 Ci)	Instrument calibration or response checking
^{235}U	3.7 GBq (1.00E-01 Ci)	Instrument calibration or response checking
^{236}U	3.7 GBq (1.00E-01 Ci)	Instrument calibration or response checking
^{237}Np	2.0 kBq (5.41 E-08 Ci)	Instrument calibration or response checking
^{238}U	164.5 Bq (4.45E-09 Ci)	Instrument calibration or response checking
^{241}Am	1.1 GBq (2.97E-02 Ci)	Instrument calibration or response checking

Byproduct material may be in solid, liquid, or gaseous form.

Byproduct material is not necessarily restricted to sealed sources.

FIGURES

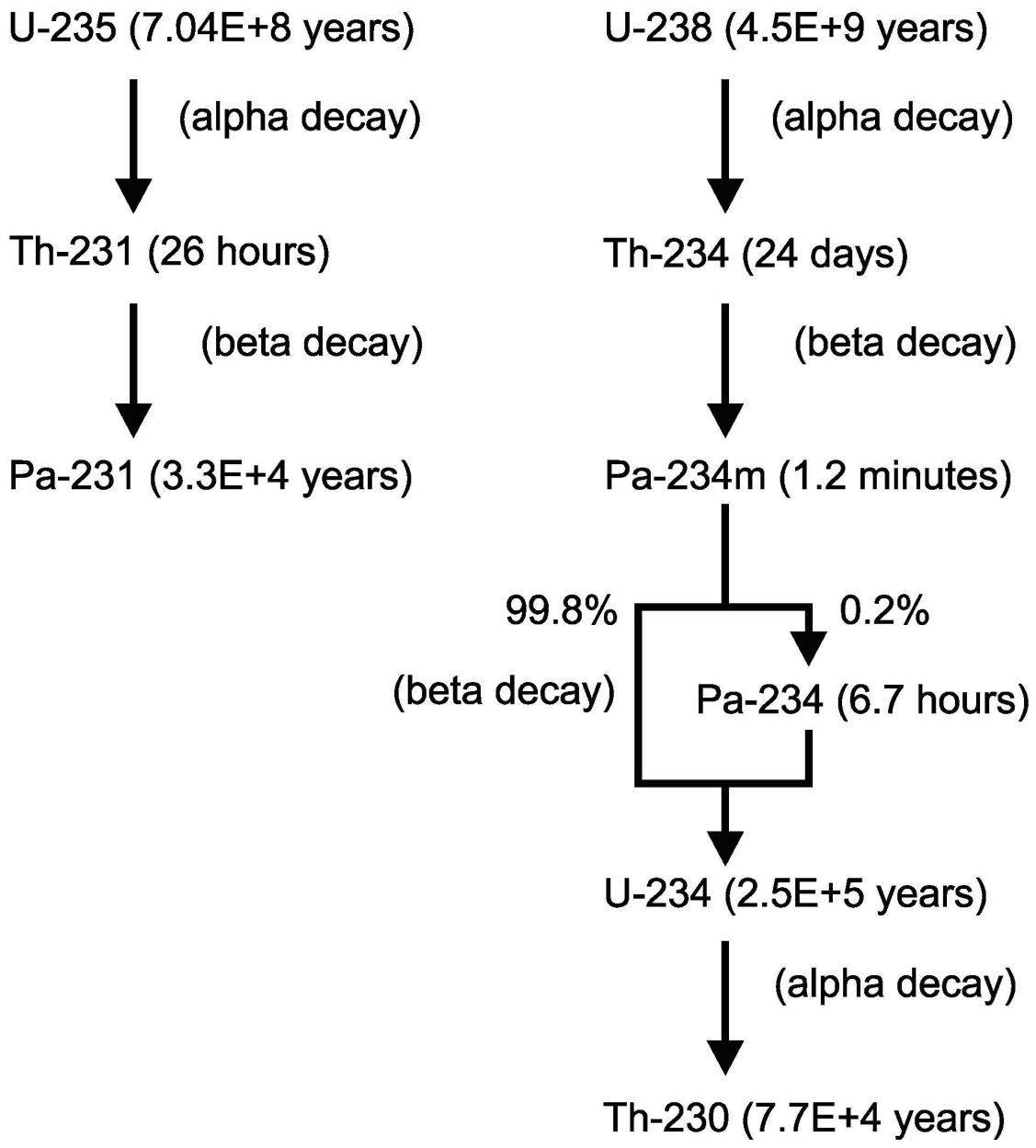

Figure 4.7-1 **Rev. 2**

Uranium and Decay Products of Interest

EAGLE ROCK ENRICHMENT FACILITY SAFETY ANALYSIS REPORT

Figure 4.7-2, Projected Radiological Access Zones, contains Security-Related Information Withheld from Disclosure under 10 CFR 2.390

TABLE OF CONTENTS

Page

5.0 NUCLEAR CRITICALITY SAFETY 5.0-1

5.1 THE NUCLEAR CRITICALITY SAFETY (NCS) PROGRAM 5.1-1

5.1.1 Management of the Nuclear Criticality Safety (NCS) Program 5.1-1

5.1.2 Control Methods for Prevention of Criticality 5.1-2

5.1.3 Safe Margins Against Criticality 5.1-6

5.1.4 Description of Safety Criteria 5.1-6

5.1.5 Organization and Administration 5.1-7

5.1.6 Passive IROFS that Contain Safe-by-Design Component Attributes 5.1-8

5.2 METHODOLOGIES AND TECHNICAL PRACTICES 5.2-1

5.2.1 Methodology 5.2-1

5.3 CRITICALITY ACCIDENT ALARM SYSTEM (CAAS) 5.3-1

5.4 REPORTING 5.4-1

5.5 REFERENCES 5.5-1

LIST OF TABLES

Table 5.1-1 Safe Values for Uniform Aqueous Solutions of Enriched UO_2F_2
Table 5.1-2 Safety Criteria for Buildings / Systems / Components
Table 5.2-1 Uranium Experiments Used for Validation

LIST OF FIGURES

None

5.0 NUCLEAR CRITICALITY SAFETY

The Nuclear Criticality Safety Program for the Eagle Rock Enrichment Facility (EREF) is in accordance with U.S. Nuclear Regulatory Commission (NRC) Regulatory Guide 3.71, Nuclear Criticality Safety Standards for Fuel and Material Facilities (NRC, 2005). Regulatory Guide 3.71 (NRC, 2005) provides guidance on complying with the applicable portions of NRC regulations, including 10 CFR 70 (CFR, 2008c), by describing procedures for preventing nuclear criticality accidents in operations involving handling, processing, storing, and transporting special nuclear material (SNM) at fuel and material facilities. The NEF SAR references Revision 0 of Regulatory Guide 3.71 (NRC, 1998). Revision 1 does not change any of the guidance provided in the initial issuance of Regulatory Guide 3.71; rather, it provides guidance concerning changes that have occurred since the NRC published the original guide in 1998. AREVA Enrichment Services, LLC (AES) is committed to following the guidelines in this regulatory guide for specific ANSI/ANS criticality safety standards. Piping configurations containing aqueous solutions of fissile material will be evaluated in accordance with ANSI/ANS- 8.1-1998 (ANSI, 1998a), using validated methods to determine subcritical limits. The information provided in this chapter, the corresponding regulatory requirements, and the section of NUREG-1520 (NRC, 2002), Chapter 5 in which the NRC acceptance criteria are presented is summarized below.

Information Category and Requirement	10 CFR 70 Citation	NUREG-1520 Chapter 5 Reference
Section 5.1 Nuclear Criticality Safety (NCS) Program		
Management of the NCS Program	70.61(d) 70.64(a)	5.4.3.1
Control Methods for Prevention of Criticality	70.61	5.4.3.4.2
Safe Margins Against Criticality	70.61	5.4.3.4.2
Description of Safety Criteria	70.61	5.4.3.4.2
Organization and Administration	70.61	5.4.3.2
Section 5.2 Methodologies and Technical Practices		
Methodology	70.61	5.4.3.4.1 5.4.3.4.4 5.4.3.4.6
Section 5.3 Criticality Accident Alarm System (CAAS)		
Criticality Accident Alarm System	70.24	5.4.3.4.3
Section 5.4 Reporting		
Reporting Requirements	Appendix A	5.4.3.4.7 (7)

5.1 THE NUCLEAR CRITICALITY SAFETY (NCS) PROGRAM

The AREVA EREF, located in Bonneville County, Idaho, will be designed, constructed, and operated such that a nuclear criticality event is prevented, and to meet the regulatory requirements of 10 CFR 70 (CFR, 2008c). Nuclear criticality safety at the facility is assured by designing the facility, systems and components with safety margins such that safe conditions are maintained under normal and abnormal process conditions and any credible accident. Items Relied On For Safety (IROFS) identified to ensure subcriticality are discussed in the EREF Integrated Safety Analysis (ISA) Summary.

5.1.1 Management of the Nuclear Criticality Safety (NCS) Program

The NCS criteria in Section 5.2, Methodologies and Technical Practices, are used for managing criticality safety and include adherence to the double contingency principle as stated in the ANSI/ANS-8.1-1998, Nuclear Criticality Safety In Operations with Fissionable Materials Outside Reactors (ANSI, 1998a). The adopted double contingency principle states "process design should incorporate sufficient factors of safety to require at least two unlikely, independent, and concurrent changes in process conditions before a criticality accident is possible." Each process that has accident sequences that could result in an inadvertent nuclear criticality at the EREF meets the double contingency principle. To meet the double contingency principle, the EREF will incorporate into process designs sufficient factors of safety to require at least two unlikely, independent, and concurrent changes in process conditions before a criticality accident is possible.

Using these NCS criteria, including the double contingency principle, low enriched uranium enrichment facilities have never had an accidental criticality. The plant will produce no greater than 5.0 $^{w}/_{o}$ enrichment. However, as additional conservatism, the nuclear criticality safety analyses are performed assuming a ^{235}U enrichment of 6.0 $^{w}/_{o}$, except for Contingency Dump System traps and tails cylinders which are analyzed assuming a ^{235}U enrichment of 1.5 $^{w}/_{o}$, and include appropriate margins to safety. In accordance with 10 CFR 70.61(d) (CFR, 2008a), the general criticality safety philosophy is to prevent accidental uranium enrichment excesses, provide geometrical safety when practical, provide for moderation controls within the UF_6 processes and impose strict mass limits on containers of aqueous, solvent based, or acid solutions containing uranium. All NCS controls are preventative in nature; there are no mitigative NCS controls. Interaction controls provide for safe movement and storage of components. Plant and equipment features assure prevention of excessive enrichment. The plant is divided into eight distinctly separate Assay Units (called Cascade Halls) with no common UF_6 piping. UF_6 blending is done in a physically separate portion of the plant. Process piping, individual centrifuges and chemical traps are safe by limits placed on their diameters. Product cylinders rely upon uranium enrichment, moderation control, and mass limits to protect against the possibility of a criticality event. Each of the liquid effluent collection tanks that hold uranium in solution is mass controlled, as none are geometrically safe. As required by 10 CFR 70.64(a) (CFR, 2008b), by observing the double contingency principle throughout the plant, a criticality accident is reduced. In addition to the double contingency principle, effective management of the NCS Program includes:

- An NCS program to meet the regulatory requirements of 10 CFR 70 (CFR, 2008c) will be developed, implemented, and maintained.
- Safety parameters and procedures will be established.

- The NCS program structure, including definition of the responsibilities and authorities of key program personnel will be provided.
- The NCS methodologies and technical practices will be kept applicable to current configuration by means of the configuration management function. The NCS program will be upgraded, as necessary, to reflect changes in the ISA or NCS methodologies and to modify operating and maintenance procedures in ways that could reduce the likelihood of occurrence of an inadvertent nuclear criticality.
- The NCS program will be used to establish and maintain NCS safety limits and NCS operating limits for IROFS in nuclear processes and a commitment to maintain adequate management measures to ensure the availability and reliability of the IROFS.
- NCS postings will be provided and maintained current.
- NCS emergency procedure training will be provided.
- The NCS baseline design criteria requirements in 10 CFR 70.64(a) (CFR, 2008b) will be adhered to.
- The NCS program will be used to evaluate modifications to operations, to recommend process parameter changes necessary to maintain the safe operation of the facility, and to select appropriate IROFS and management measures.
- The NCS program will be used to promptly detect NCS deficiencies by means of operational inspections, audits, and investigations. Deficiencies will be entered into the corrective action program so as to prevent recurrence of unacceptable performance deficiencies in IROFS, NCS function, or management measures.
- NCS program records will be retained as described in Section 11.7, Records Management.

Nuclear Criticality Safety Training will be provided to individuals who handle nuclear material at the facility. The training is based upon the training program described in ANSI/ANS-8.20-1991, Nuclear Criticality Safety Training (ANSI, 1991). The training program is developed and implemented with input from the criticality safety staff, training staff, and management. The training focuses on the following:

- Appreciation of the physics of nuclear criticality safety.
- Analysis of jobs and tasks to determine what a worker must know to perform tasks efficiently.
- Design and development of learning objectives based upon the analysis of jobs and tasks that reflect the knowledge, skills, and abilities needed by the worker.
- Implementation of revised or temporary operating procedures.
- Required response to the activation of the Criticality Accident Alarm Signals (CAAS).
- Required response to NCS nonconformance.

Additional discussion of management measures is provided in Chapter 11, Management Measures.

5.1.2 Control Methods for Prevention of Criticality

The major controlling parameters used in the facility are enrichment control, geometry control, moderation control, and/or limitations on the mass as a function of enrichment. In addition,

reflection, interaction, and heterogeneous effects are important parameters considered and applied where appropriate in nuclear criticality safety analyses (NCSAs). NCSAs and Nuclear Criticality Safety Evaluations (NCSEs) are used to identify the significant parameters affected within a particular system. All assumptions relating to process, equipment, material function, and operation, including credible abnormal conditions, are justified, documented, and independently reviewed. Where possible, passive engineered controls are used to ensure NCS. The determination of the safe values of the major controlling parameters used to control criticality in the facility is described below.

Moderation control is in accordance with ANSI/ANS-8.22-1997, Nuclear Criticality Safety Based on Limiting and Controlling Moderators (ANSI, 1997). However, for the purposes of the NCSA, it is assumed that UF_6 comes in contact with water to produce aqueous solutions of UO_2F_2 as described in Section 5.2.1.3.3, Uranium Accumulation and Moderation Assumption. A uniform aqueous solution of UO_2F_2, and a fixed enrichment are conservatively modeled using MONK8A (SA, 2001) and the JEF2.2 library. Criticality analyses were performed to determine the maximum value of a parameter to yield $k_{eff} = 1$. The criticality analyses were then repeated to determine the maximum value of the parameter to yield a $k_{eff} = 0.95$. Table 5.1-1, Safe Values for Uniform Aqueous Solution of Enriched UO_2F_2, shows both the critical and safe limits for 5.0 $^w/_o$ and 6.0 $^w/_o$. The values in Table 5.1-1 are changed from the NEF because the MONK8A (SA, 2001) criticality analyses were performed with a revised correlation for the density of aqueous solutions of UO_2F_2.

Table 5.1-2, Safety Criteria for Buildings/ Systems/Components, lists the safety criteria of Table 5.1-1, Safe Values for Uniform Aqueous Solutions of Enriched UO_2F_2, which are used as control parameters to prevent a nuclear criticality event. Although the EREF will be limited to 5.0 $^w/_o$ enrichment, as additional conservatism, the values in Table 5.1-2, Safety Criteria for Buildings/Systems/ Components, represent the limits based on 6.0 $^w/_o$ enrichment except for the Contingency Dump System traps and tails cylinders which are limited to 1.5 $^w/_o$ ^{235}U.

The values in Table 5.1-1 are calculated optimum moderation (i.e., various H/U ratios greater than and less than 7 are analyzed) and 30 cm water reflection. The conservative modeling techniques provide for more conservative values than provided in ANSI/ANS-8.1 (ANSI, 1998a). The product cylinders are only safe under conditions of limited moderation and enrichment. In such cases, both design and operating procedures are used to assure that these limits are not exceeded.

All Separation Plant components, which handle enriched UF_6, other than the Type 30B and 48Y cylinders and the first stage UF_6 pumps are safe by geometry. Centrifuge array criticality is precluded by a probability argument with multiple operational procedure barriers. Total moderator or H/U ratio control as appropriate precludes product cylinder criticality.

In the Technical Support Building (TSB) criticality safety for uranium loaded liquids is ensured by limiting the mass of uranium in any single tank to less than or equal to 12.2 kg U (26.9 lb U). Individual liquid storage bottles are safe by volume. Interaction in storage arrays is accounted for.

Based on the criticality analyses, the control parameters applied to EREF are as follows:

<u>Enrichment</u>

Enrichment is controlled to limit the percent ^{235}U within any process, vessel, or container, except the contingency dump system, to a maximum enrichment of 5 $^w/_o$. The design of the contingency dump system controls enrichment to a limit of 1.5 $^w/_o$ ^{235}U. Although EREF is limited to a maximum enrichment of 5 $^w/_o$, as added conservatism nuclear criticality safety is analyzed using an enrichment of 6 $^w/_o$ ^{235}U.

Geometry/Volume

Geometry / volume control may be used to ensure criticality safety within specific process operations or vessels, and within storage containers.

The geometry / volume limits are chosen to ensure k_{eff} ($k_{calc} + 3\sigma_{calc}$) < 0.95.

The safe values of geometry / volume define the characteristic dimension of importance for a single unit such that nuclear criticality safety is not dependent on any other parameter assuming 6 $^{w}/_{o}$ ^{235}U for safety margin.

Moderation

Water and oil are the moderators considered in EREF. At EREF the only system where moderation is used as a control parameter is in the product cylinders. Moderation control is established consistent with the guidelines of ANSI/ANS-8.22-1997 (ANSI, 1997) and incorporates the criteria below:

Controls are established to limit the amount of moderation entering the cylinders.

When moderation is the only parameter used for criticality control, the following additional criteria are applied. These controls assure that at least two independent controls would have to fail before a criticality accident is possible.

- Two independent controls are utilized to verify cylinder moderator content.
- These controls are established to monitor and limit uncontrolled moderator prior to returning a cylinder to production thereby limiting the amount of uncontrolled moderator from entering a system to an acceptable limit.
- The evaluation of the cylinders under moderation control includes the establishment of limits for the ratio of maximum moderator-to-fissile material for both normal operating and credible abnormal conditions. This analysis has been supported by parametric studies.

When moderation is not considered a control parameter, either optimum moderation or worst case H/U ratio is assumed when performing criticality safety analysis.

Mass

Mass control may be utilized to limit the quantity of uranium within specific process operations, vessels, or storage containers. Mass control may be used on its own or in combination with other control methods. Analysis or sampling is employed to verify the mass of the material. Conservative administrative limits for each operation are specified in the operating procedures.

Whenever mass control is established for a container, records are maintained for mass transfers into and out of the container. Establishment of mass limits for a container involves consideration of potential moderation, reflection, geometry, spacing, and enrichment. The evaluation considers normal operations and credible abnormal conditions for determination of the operating mass limit for the container and for the definition of subsequent controls necessary to prevent reaching the safety limits. When only administrative controls are used for mass controlled systems, double batching is conservatively assumed in the analysis.

Reflection

Reflection is considered when performing NCSAs and NCSEs. The possibility of full water reflection is considered but the layout of the EREF is a very open design and it is highly unlikely that those vessels and plant components requiring criticality control could become flooded from a source of water within the plant. However, some select analyses have been performed using full reflection for conservatism. Partial reflection of 2.5 cm (0.984 in) of water is assumed where

limited moderating materials (including humans) may be present. It is recognized that concrete can be a more efficient reflector than water; therefore, it is modeled in analyses where it is present. When moderation control is identified in the ISA Summary, it is established consistent with the guidelines of ANSI/ANS-8.22-1997 (ANSI, 1997).

The NEF SAR stated neither automatic sprinkler nor standpipe and hose systems are provided in the TSB, Separation Buildings, Blending and Liquid Sampling, CRDB, CAB, and Centrifuge Post Mortem areas. Automatic and manual water-based fire protection systems (fire sprinklers and standpipes) are required by the building code in EREF process buildings due to occupancy classification and/or lack of exterior openings. As these include areas containing enriched uranium, the risk of fire versus the risk of criticality has been considered in developing a methodology for evaluating the application or omission of water-based fire suppression. This methodology will be a precursor to final NCSAs and considers the following parameters: presence and quantity of fissile materials and configuration; in-situ combustibles and configuration; probability/presence of transient combustibles; probability/presence of ignition sources; impact of reflection from external water spray; potential to flood fissile components/containers; potential for water to enter non-moderator controlled vacuum systems; potential to displace safe by geometry shapes, vessels, arrays; safeguards/barriers to moderator introduction and impact of natural phenomena hazards and impact on barriers (e.g., seismic, high wind, snow/rain/flood loading, etc.).

The impact of interstitial aerial water density on single components, interacting components, or arrays will be included in criticality safety assessments at detailed design when component locations are known. Literature indicates that maximum aerial density of water from fire sprinklers would not be expected to exceed 2% (0.02 g/cc). Fire sprinkler discharge could also result in sheeting of water on surfaces. This has been shown to not exceed a depth of more than 4 mm (0.16 in) on cylindrical surfaces (DOE, 1997) (DOE, 1994).

To avoid the risk of a criticality due to water ingress, fire sprinkler coverage will not be provided where sprinklers could discharge water on or near sub-atmospheric process systems containing enriched UF_6 above a critical mass and requiring moderator control (i.e., not safe-by-design). Similarly, fire sprinklers will not be provided over areas where discharge could result in accumulation of a critical mass in an unsafe geometry (i.e., non-safe floors, drains, or collection basins). Fire risk in areas where sprinklers are omitted will be controlled through other measures (i.e., limit or exclusion of combustible material, alternate suppression systems, etc.).

Where fire sprinkler systems are installed in areas containing uranium, they will be of the pre-action type to ensure that inadvertent discharge of water does not occur. Pre-action sprinkler systems include closed head sprinklers used in conjunction with a control valve. This requires two independent operations – detection of fire by a separate fire alarm system which opens a sprinkler control valve to allow water into the piping network and actuation of individual sprinkler(s) in response to high temperature – before water will be discharged. Piping integrity is monitored and alarmed during non-fire conditions. Pre-action systems will also be suitably designed to ensure that natural phenomena hazards (NPH) do not result in discharge under non-fire conditions making the probability of inadvertent water discharge both double contingent and non-credible.

The final areas of fire sprinkler system coverage as determined by the decision methodology will be developed jointly between fire safety and criticality safety staff and integrated into NCSA's developed at detailed design. Review and approval of these NCSAs will be in accordance with the Criticality Safety Program and will ensure double contingency and k effective + $3\sigma < 0.95$ is maintained under normal and abnormal conditions.

Because of the size of the facility, fire standpipe systems are also provided in select process areas to facilitate fire response. Standpipes will be routed in a manner and suitably designed against NPH criteria to ensure their failure will not result in flooding of areas containing enriched uranium above a critical mass.

Fire response to all process areas of the facility (whether by the on-site fire brigade or off-site fire department) requires that one member of the response team be assigned as the criticality safety officer. This individual is responsible to ensure that criticality safety is not compromised for any and all firefighting activities including the deployment of any fire hose streams in areas requiring reflection or moderator control.

Chapter 7, Fire Safety, contains additional discussion on fire system locations and application.

Interaction

NCSAs and NCSEs consider the potential effects of interaction, including interaction effects of in-transit materials. Spacing requirements will be determined on a system-by-system basis.

Individual unit multiplication, array interaction, and in-transit material interactions are evaluated using the Monte Carlo computer code MONK8A to ensure k_{eff} ($k_{calc} + 3\sigma_{calc}$) < 0.95.

Concentration, Density and Neutron Absorbers

EREF does not use mass concentration, density, or neutron absorbers as a criticality control parameter.

5.1.3 Safe Margins Against Criticality

Process operations require establishment of criticality safety limits. The facility UF_6 systems involve mostly gaseous operations. These operations are carried out under reduced atmospheric conditions (vacuum) or at slightly elevated pressures not exceeding three atmospheres. It is highly unlikely that any size changes of process piping, cylinders, cold traps, or chemical traps under these conditions, would lead to a criticality situation because a volume or mass limit may be exceeded.

Significant accumulations of enriched UF_6 reside only in the Product Low Temperature Take-off Stations, Product Liquid Sampling Autoclaves, Product Blending System, or the UF_6 cold traps. All these, except the UF_6 cold traps, contain the UF_6 in 30B and 48Y cylinders. All these significant accumulations are within enclosures protecting them from water ingress. The facility design has minimized the possibility of accidental moderation by eliminating direct water contact with these cylinders of accumulated UF_6. In addition, the facility's stringent procedural controls for enriching the UF_6 assure that it does not become unacceptably hydrogen moderated while in process. The plant's UF_6 systems operating procedures contain safeguards against loss of moderation control (ANSI, 1997). No neutron poisons are relied upon to assure criticality safety.

5.1.4 Description of Safety Criteria

Each portion of the plant, system, or component that may possibly contain enriched uranium is designed with criticality safety as an objective. Table 5.1-2, Safety Criteria for Buildings/ Systems/Components, shows how the safety criteria of Table 5.1-1, Safe Values for Uniform Aqueous Solutions of Enriched UO_2F_2, are applied to the facility to prevent a nuclear criticality event. Although the EREF will be limited to 5.0 $^{w}/_{o}$ enrichment, as additional conservatism the values in Table 5.1-2 represent the limits based on 6.0 $^{w}/_{o}$ enrichment.

Where there are significant in-process accumulations of enriched uranium as UF_6, the plant design includes multiple features to minimize the possibilities for breakdown of the moderation control limits. These features eliminate direct ingress of water to product cylinders while in process.

5.1.5 Organization and Administration

The NCS organization is responsible for implementing the Nuclear Criticality Safety Program. During the design phase, the NCS function is performed within the design engineering organization. The NCS function for operations is described below.

The NCS Manager reports to the Environmental, Health, Safety, and Licensing (EHS&L) Manager as described in Chapter 2, Organization and Administration. The EHS&L Manager is accountable for overall nuclear criticality safety of the facility, is administratively independent of production responsibilities, and has the authority to shut down potentially unsafe operations.

Designated responsibilities of the NCS Manager include the following:

- Establish the Nuclear Criticality Safety Program, including design criteria, procedures, and training
- Provide criticality safety support for integrated safety analyses and configuration control
- Assess normal and credible abnormal conditions
- Determine NCS limits for controlled parameters
- Develop and validate methods to support nuclear criticality safety evaluations (NCSEs) (i.e., non-calculation engineering judgments regarding whether existing criticality safety analyses bound the issue being evaluated or whether new or revised safety analyses are required)
- Perform NCS analyses (i.e., calculations), write NCS evaluations, and approve proposed changes in process conditions on equipment involving fissionable material
- Specify NCS control requirements and functionality
- Provide advice and counsel on criticality safety control measures, including review and approval of operating procedures
- Support emergency response planning and events
- Evaluate the effectiveness of the NCS Program using audits and assessments
- Provide NCS postings that identify administrative controls for operators in applicable work areas.

The minimum qualifications for the NCS Manager and NCS Engineers are described in Section 2.2.4. The EHS&L Manager has the authority and responsibility to assign and direct activities for the NCS Program. The NCS Manager is responsible for implementation of the NCS program. The NCS function will be staffed with suitably trained personnel and provided sufficient resources for operation.

EREF management implements the administrative practices for criticality safety, as contained in Section 4.1.1 of American National Standards Institute/American Nuclear Society (ANSI/ANS)-8.1-1998, Nuclear Criticality Safety in Operations with Fissionable Materials Outside Reactors (ANSI, 1998a). A policy will be established whereby personnel shall report defective NCS conditions and perform actions only in accordance with written, approved procedures. Unless a specific procedure deals with the situation, personnel shall report defective NCS conditions and take no action until the situation has been evaluated and recovery procedures provided.

5.1.6 Passive IROFS that Contain Safe-by-Design Component Attributes

The passive IROFS that contain safe-by-design component attributes listed in Appendices B and C of the ISAS are designated as IROFS that are safe by their respective geometry attribute (diameter, volume or slab thickness) or as IROFS that are safe by criticality analysis.

The passive, safe-by-design feature of these components do not rely on human interface to perform the criticality safety function. The only potential means to effect a change to the safe-by-design feature that might result in a failure to function, would be to implement a design change. Credible process deviations or events do not adversely impact the performance of the safety function. The evaluation of the potential to adversely impact the safety function of the passive design feature (which includes consideration of potential mechanisms to cause bulging, corrosion, and breach of confinement/leakage and subsequent accumulation of material) is presented in Appendix B and Appendix C of the ISAS, and includes consideration of adequate controls to ensure the double contingency principle is met. For the identified components, Appendix B and Appendix C summarize the rationale for the conclusion that there is no credible means to effect a change to the safe-by-design feature that might result in a failure of the safety function. Appendix B and Appendix C also support the conclusion that significant margin exists.

For components whose passive design feature is the safe-by-design attribute of diameter, volume or slab thickness, significant margin is defined as a margin of at least 10%, during both normal and upset conditions. Margin is calculated between the actual design parameter value of the component and the value of the corresponding 6.0 $^{w}/_{o}$ enrichment critical value of diameter per Table 5.1-1 of the SAR.

For components whose passive design feature is the safe-by-design attribute of physical arrangement, significant margin is defined as a k_{eff} <0.95, where $k_{eff} = k_{calc} + 3\sigma_{calc}$.

The frequency for the criticality initiating event was determined to be “highly unlikely” based on (1) the lack of credible means to effect an adverse change to the safe-by-design feature of these passive design components, (2) the significant margins of safety that exist, (3) the application of the 10 CFR 70.72 Configuration Management System to preserve the safety design features, and (4) the relative low risk of a criticality event at low enriched uranium enrichment facilities. Therefore, an initiating event index of (-5) is appropriate.

QA Level 1 requirements apply to this feature. In addition, the Configuration Management System required by 10 CFR 70.72 (implemented by the Eagle Rock Enrichment Facility Configuration Management Program) ensures the maintenance of the safety function of this feature and assures compliance with the double contingency principle, as well as the defense-in-depth criterion of 10 CFR 70.64(b).

5.2 METHODOLOGIES AND TECHNICAL PRACTICES

This section describes the methodologies and technical practices used to perform the NCS analyses (NCSAs) and NCS evaluations (NCSEs). The determination of the NCS controlled parameters and their application and the determination of the NCS limits on IROFS are also presented.

5.2.1 Methodology

MONK8A (SA, 2001) is a Monte Carlo tool for NCS analysis. The advanced geometry modeling capability and detailed continuous energy collision modeling treatments provide realistic 3-dimensional models for an accurate simulation of neutronic behavior to provide the best estimate neutron multiplication factor, k-effective. Complex models can be simply set up and verified. Additionally, MONK8A (SA, 2001) has demonstrable accuracy over a wide range of applications and is distributed with a validation database comprising critical experiments covering uranium, plutonium and mixed systems over a wide range of moderation and reflection. The experiments selected are regarded as being representative of systems that are widely encountered in the nuclear industry, particularly with respect to chemical plant operations, transportation, and storage. The validation database is subject to on-going review and enhancement. A categorization option is available in MONK8A (SA, 2001) to assist the criticality analyst in determining the type of system being assessed and provides a quick check that a calculation is adequately covered by validation cases.

5.2.1.1 Methods Validation

The validation process establishes method bias by comparing measured results from laboratory critical experiments to method-calculated results for the same systems. The verification and validation processes are controlled and documented. The validation establishes a method bias by correlating the results of critical experiments with results calculated for the same systems by the method being validated. Critical experiments are selected to be representative of the systems to be evaluated in specific design applications. The range of experimental conditions encompassed by a selected set of benchmark experiments establishes the area of applicability over which the calculated method bias is applicable. Benchmark experiments are selected that resemble as closely as practical the systems being evaluated in the design application.

The extensive validation database contains a number of solution experiments applicable to this application involving both low and high-enriched uranium. The MONK8A (SA, 2001) code with the JEF2.2 library was validated against these experiments which are provided in the International Handbook of Evaluated Criticality Safety Benchmark Experiments (NEA, 2002), NUREG/CR-1071 (NRC, 1980). Experiments chosen are provided in Table 5.2-1, Uranium Solution Experiments Used for Validation, along with a brief description. The overall mean calculated value from the 93 configurations is 1.0017 ± 0.0034 and the results are provided in the MONK8A Validation and Verification report (AREVA, 2008).

MONK8A is distributed in ready-to-run executable form. This approach provides the user with a level of quality assurance consistent with the needs of safety analysis. The traceability from source code to executable code is maintained by the code vendor.

In accordance with the guidance in NUREG-1520 (NRC, 2002), code validation for the specific application has been performed (AREVA, 2008). Specifically, the experiments provided in Table 5.2-1, Uranium Experiments Used for Validation, were calculated and documented in the MONK8A Validation and Verification report (AREVA, 2008) for the Eagle Rock Enrichment

Facility. In addition, the MONK8A Validation and Verification report (AREVA, 2008) satisfies the commitment to ANSI/ANS-8.1-1998 (ANSI, 1998a) and includes details of computer codes used, operations, recipes for choosing code options (where applicable), cross sections sets, and any numerical parameters necessary to describe the input.

The MONK8A computer code and JEF2.2 library are within the scope of the Quality Assurance Program.

5.2.1.2 Limits on Control and Controlled Parameters

The validation process established a bias by comparing calculations to measured critical experiments. With the bias determined, an upper safety limit (USL) can be determined using the using the Single Sided Lower Tolerance Limit equations from the NUREG/CR-6698, Guide for Validation of Nuclear Criticality Safety Calculational Methodology (NRC, 2001):

$$USL = K_L - \Delta_{SM} - \Delta_{AOA}$$

where

$$K_L = \bar{k}_{eff} - U(S_P)$$

Where

$\bar{k}_{eff}$ is the weighted average K_{eff} of the analyzed benchmark experiments and by analysis is 1.0010. Because of the positive bias, Bias = $\bar{k}_{eff}$ - 1 = 0.0010, $\bar{k}_{eff}$ is conservatively adjusted to unity (1.0),

U is the one-sided lower tolerance factor and is determined from the analysis to be 2.065,

S_P is the square root of the pooled variance and is determined from the analysis to be 0.0044,

Δ_{SM} is the margin of subcriticality and is set to 0.05,

Δ_{AOA} is an additional margin of subcriticality that may be necessary as a result of extensions to the area of applicability (AOA) and is determined from the analysis to be 0.0014. If extensions are not made to the AOA, Δ_{AOA} is zero.

Where the critical experiments are assumed to have a k_{eff} of unity, the bias is the difference of the calculated k_{eff} and the experimental k_{eff} (i.e., Bias = calculated k_{eff} – experimental k_{eff}). From Section 5.2.1.1, Methods Validation, the bias (0.0010) is positive and since a positive bias may be non-conservative, the bias is set to zero and is unity (1.0). The term Δ_{AOA} is an additional subcritical margin to account for extensions in the AOA. Since the experiments in the benchmark are representative of the application, the term Δ_{AOA} is set to zero for systems and components not associated with the Contingency Dump System. For the Contingency Dump System, it was necessary to extrapolate the AOA to include 1.5% enrichment and the Δ_{AOA} term is set to 0.0014 to account for this extrapolation. Thus, the USL becomes:

- USL = 0.9908 - 0.05 - 0.0 = 0.9408 (for systems and components NOT associated with the Contingency Dump System) (AREVA, 2008)
- USL = 0.9908 - 0.05 - 0.0014 = 0.9394 (for the Contingency Dump System) (AREVA, 2008)

NUREG/CR-6698 (NRC, 2001) requires that the following condition be demonstrated for all normal and credible abnormal operating conditions:

$$k_{calc} + 2\sigma_{calc} < USL$$

The risk of an accidental criticality resulting from EREF operations is inherently low. The low risk warrants the use of an alternate approach.

At the low enrichment limits established for the EREF, sufficient mass of enriched uranic material cannot be accumulated to achieve criticality without moderation. Uranium in the centrifuge plant is inherently a very dry, unmoderated material. Centrifuge separation operations at EREF do not include solutions of enriched uranium. For most components that form part of the centrifuge plant or are connected to it, sufficient mass of moderated uranium can only accumulate by reaction between UF_6 and moisture in air leaking into plant process systems, leading to the accumulation of uranic breakdown material. Due to the high vacuum requirements for the normal operation of the facility, air in-leakage into the process systems is controlled to very low levels and thus the highly moderated condition assumed represents an abnormal condition. In addition, excessive air in-leakage would result in a loss of vacuum, which in turn would cause the affected centrifuges to crash (self destruct) and the enrichment process in the affected centrifuges to stop. As such, buildup of additional mass of moderated uranic breakdown material, such that component becomes filled with sufficient mass of enriched uranic material for criticality, is precluded. Even when accumulated in large UF_6 cylinders or cold traps, neither UF_6 nor UO_2F_2 can achieve criticality without moderation at the low enrichment limit established for the EREF.

Therefore, due to the low risk of accidental criticality associated with EREF operations and the margin that exists in the design and operation of the EREF with respect to nuclear criticality safety, a margin of sub-criticality for safety of 0.05 (i.e., $k_{eff} = k_{calc} + 3\sigma_{calc} < 0.95$) is adequate to ensure sub-criticality is maintained under normal and abnormal credible conditions. As such, the EREF will be designed using the equation:

$$k_{eff} = k_{calc} + 3\sigma_{calc} < 0.95$$

5.2.1.3 General Nuclear Criticality Safety Methodology

The NCS analyses results provide values of k-effective (k_{eff}) to conservatively meet the upper safety limit. The following sections provide a description of the major assumptions used in the NCS analyses.

5.2.1.3.1 Reflection Assumption

The layout of the EREF is a very open design and it is not considered credible that those vessels and plant components requiring criticality control could become flooded from a source of water within the plant. However, some select analyses have full water reflection for conservatism. Otherwise, where appropriate, spurious reflection due to walls, fixtures, personnel, etc. has been accounted for by assuming 2.5 cm (0.984 in) of water reflection around vessels.

5.2.1.3.2 Enrichment Assumption

The EREF will operate with a 5.0 $^{w}/_{o}$ ^{235}U enrichment limit. However, the nuclear criticality safety calculations used an enrichment of 6.0 $^{w}/_{o}$ ^{235}U. This assumption provides additional conservatism for plant design.

5.2.1.3.3 Uranium Accumulation and Moderation Assumption

Most components that form part of the centrifuge plant or are connected to it reflect the assumption that any accumulation of uranium is taken to be in the form of a uranyl fluoride/water mixture at a maximum H/U atomic ratio of 7 (exceptions are discussed in the associated nuclear criticality safety analyses documentation). The ratio is based on the assumption that significant quantities of moderated uranium could only accumulate by reaction between UF_6 and moisture in air leaking into the plant process equipment. Due to the high vacuum requirements of a centrifuge plant, in-leakage is controlled at very low levels and thus the H/U ratio of 7 represents an abnormal condition. The maximum H/U ratio of 7 for the uranyl fluoride-water mixture is derived as follows:

The stoichiometric reaction between UF_6 and water vapor in the presence of excess UF_6 can be represented by the equation:

$$UF_6 + 2H_2O \rightarrow UO_2F_2 + 4HF$$

Due to its hygroscopic nature, the resulting uranyl fluoride is likely to form a hydrate compound. Experimental studies (Lychev, 1990) suggest that solid hydrates of compositions $UO_2F_2 \bullet 1.5\ H_2O$ and $UO_2F_2\ 2\ H_2O$ can form in the presence of water vapor, the former composition being the stable form on exposure to atmosphere.

It is assumed that the hydrate $UO_2F_2 \bullet 1.5\ H_2O$ is formed and, additionally, that the hydrogen fluoride (HF) produced by the UF_6/water vapor reaction is also retained in the uranic breakdown to give an overall reaction represented by:

$$UF_6 + 3.5H_2O \rightarrow UO_2F_2 \bullet 1.5H_2O \bullet 4HF$$

For the NCS calculations, the composition of the breakdown product was simplified to $UO_2F_2 \cdot 3.5H_2O$ that gives the same H/U ratio of 7 as above.

In the case of oils, UF_6 pumps and vacuum pumps use a fully fluorinated perfluorinated polyether (PFPE) type lubricant. Mixtures of UF_6 and PFPE oil would be as conservative a case as the uranyl fluoride/water mixture, since the maximum HF solubility in PFPE is only about $0.1^{w}/_{o}$. Therefore, the uranyl fluoride/water mixture assumption provides additional conservatism in this case.

5.2.1.3.4 Vessel Movement Assumption

The interaction controls placed on movement of vessels containing enriched uranium are specified in the facility procedures. In general, any item in movement (an item being either an individual vessel or a specified batch of vessels) must be maintained at the minimum required edge separation from any other enriched uranium, and that only one item of each type, e.g., one trap and one pump, may be in movement at one time. Spacing requirements will be determined on a system by system basis, including component insertion or extraction from an array.

5.2.1.3.5 Pump Free Volume Assumption

There are two types of pumps used in product and dump systems of the plant:

- The vacuum pumps (product and dump) are rotary vane pumps. In the enrichment plant fixed equipment, these are assumed to have a free volume of 14 L (3.7 gal) and are modeled as a cylinder in MONK8A (SA, 2001). This adequately covers all models likely to be purchased.

- The UF_6 pumping units are a combination unit of two pumps, one 500 m³/hr (17,656 ft^3/hr) pump with a free volume of 8.52 L (2.25 gal) modeled as a cylinder, and a larger 2,000 m³/hr (70,626 ft^3/hr) pump which is modeled explicitly according to manufacturer's drawings.

5.2.1.4 Nuclear Criticality Safety Analyses

Nuclear criticality safety is analyzed for the design features of the plant system or component and for the operating practices that relate to maintaining criticality safety. The analysis of individual systems or components and their interaction with other systems or components containing enriched uranium is performed to assure the criticality safety criteria are met. The nuclear criticality safety analyses and the safe values in Table 5.1-1, Safe Values for Uniform Aqueous Solution of Enriched UO_2F_2, provide a basis for the plant design and criticality hazards identification performed as part of the Integrated Safety Analysis.

Each portion of the plant, system, or component that may possibly contain enriched uranium is designed with criticality safety as an objective. Table 5.1-2, Safety Criteria for Buildings/ Systems/Components, shows how the safe values of Table 5.1-1 are applied to the facility design to prevent a nuclear criticality event. The EREF is designed and operated in accordance with the parameters provided in Table 5.1-2. The Integrated Safety Analysis reviewed the facility design and operation and identified Items Relied On For Safety to ensure that criticality does not pose an unacceptable risk.

Each NCS analysis includes, as a minimum, the following information:

- A discussion of the scope of the analysis and a description of the system(s)/process(es) being analyzed.
- A discussion of the methodology used in the criticality calculations, which includes the validated computer codes and cross section library used and the k_{eff} limit used (0.95).
- A discussion of assumptions (e.g. reflection, enrichment, uranium accumulation, moderation, movement of vessels, component dimensions) and the details concerning the assumptions applicable to the analysis.
- A discussion on the system(s)/process(es) analyzed and the analysis performed, including a description of the accident or abnormal conditions assumed.
- A discussion of the analysis results, including identification of required limits and controls.

During the design phase of EREF, the NCS analysis is performed by an NCS engineer and independently reviewed by a second NCS engineer. During the operation of EREF, the NCS analysis is performed by NCS engineer, independently reviewed by a second NCS engineer, and approved by the NCS Manager. Only qualified NCS engineers can perform NCS analyses and associated independent review.

5.2.1.5 Additional Nuclear Criticality Safety Analyses Commitments

The EREF NCS analyses were performed using the methodologies and assumptions in Section 5.2.1.3 and Section 5.2.1.4.

NCS analyses also meet the following:

- NCS analyses are performed using acceptable methodologies.
- Methods are validated and used only within demonstrated acceptable ranges.

- The analyses adhere to ANSI/ANS-8.1-1998 (ANSI, 1998a) as it relates to methodologies.
- The validation report statement in Regulatory Guide 3.71 (NRC, 2005) is as follows: EREF has demonstrated (1) the adequacy of the margin of safety for subcriticality by assuring that the margin is large compared to the uncertainty in the calculated value of k_{eff}, (2) that the calculation of k_{eff} is based on a set of variables whose values lie in a range for which the methodology used to determine k_{eff} has been validated, and (3) that trends in the bias support the extension of the methodology to areas outside the area or areas of applicability.
- A specific reference to (including the date and revision number) and summary description of either a manual or a documented, reviewed, and approved validation report for each methodology are included. Any change in the reference manual or validation report will be reported to the NRC by letter.
- The reference manual and documented reviewed validation report will be kept at the facility.
- The reference manual and validation report are incorporated into the configuration management program.
- The NCS analyses are performed in accordance with the methods specified and incorporated in the configuration management program.
- The NCS methodologies and technical practices in NUREG-1520 (NRC, 2002), Section 5.4.3.4, are used to analyze NCS accident sequences in operations and processes, except for Item 4 in Section 5.4.3.4.1 and Items 9, 13 and 15 in Section 5.4.3.4.2.
- The acceptance criteria in NUREG-1520 (NRC, 2002), Section 3.4, as they relate to: identification of NCS accident sequences, consequences of NCS accident sequences, likelihood of NCS accident sequences, and descriptions of IROFS for NCS accident sequences are met.
- NCS controls and controlled parameters to assure that under normal and credible abnormal conditions, all nuclear processes are subcritical, including use of an approved margin of subcriticality for safety are used.
- As stated in ANSI/ANS-8.1-1998 (ANSI, 1998a), process specifications incorporate margins to protect against uncertainties in process variables and against a limit being accidentally exceeded.
- ANSI/ANS-8.7-1998 (ANSI, 1998b), as it relates to the requirements for subcriticality of operations, the margin of subcriticality for safety, and the selection of controls required by 10 CFR 70.61(d) (CFR, 2008a), is used.
- ANSI/ANS-8.10-1983 (ANSI, 1983), as modified by Regulatory Guide 3.71 (NRC, 2005), as it relates to the determination of consequences of NCS accident sequences, is used.
- If administrative k_{eff} margins for normal and credible abnormal conditions are used, NRC pre-approval of the administrative margins will be sought.
- Subcritical limits for k_{eff} calculations such that: k_{eff} subcritical = 1.0 - bias - margin, where the margin includes adequate allowance for uncertainty in the methodology, data, and bias to assure subcriticality are used.
- Studies to correlate the change in a value of a controlled parameter and its k_{eff} value are performed. The studies include changing the value of one controlled parameter and determining its effect on another controlled parameter and k_{eff}.

- The double contingency principle is met. The double contingency principle is used in determining NCS controls and IROFS.
- The acceptance criteria in NUREG-1520 (NRC, 2002) Section 3.4, as they relate to subcriticality of operations and margin of subcriticality for safety, are met.

5.2.1.6 Nuclear Criticality Safety Evaluations (NCSE)

For any change (i.e., new design or operation, or modification to the facility or to activities of personnel, e.g., site structures, systems, components, computer programs, processes, operating procedures, management measures), that involves or could affect uranium, a NCSE shall be prepared and approved. Prior to implementing the change, it shall be determined that the entire process will be subcritical (with approved margin for safety) under both normal and credible abnormal conditions. If this condition cannot be shown with the NCSE, either a new or revised NCS analysis will be generated that meets the criteria, or the change will not be made.

The NCSE shall determine and explicitly identify the controlled parameters and associated limits upon which NCS depends, assuring that no single inadvertent departure from a procedure could cause an inadvertent nuclear criticality and that the safety basis of the facility will be maintained during the lifetime of the facility. The evaluation ensures that all potentially affected uranic processes are evaluated to determine the effect of the change on the safety basis of the process, including the effect on bounding process assumptions, on the reliability and availability of NCS controls, and on the NCS of connected processes.

Engineering judgment of the NCS engineer is used to ascertain the criticality impact of the proposed change. The basis for this judgment is documented with sufficient detail in the NCSE to allow the independent review by a second NCS engineer to confirm the conclusions of the judgment of results. Each NCSE includes, as a minimum, the following information:

- A discussion of the scope of the evaluation, a description of the system(s)/process(es) being evaluated, and identification of the applicable nuclear criticality safety analysis.
- A discussion to demonstrate the applicable nuclear criticality safety analysis is bounding for the condition evaluated.
- A discussion of the impact on the facility criticality safety basis, including effect on bounding process assumptions, on reliability and availability NCS controls, and on the nuclear criticality safety of connected system(s)/process(es).
- A discussion of the evaluation results, including (1) identification of assumptions and equipment needed to ensure nuclear criticality safety is maintained and (2) identification of limits and controls necessary to ensure the double contingency principle is maintained.

The NCSE is performed and documented by an NCS engineer. Once the NCSE is completed and the independent review by a NCS engineer is performed and documented, the NCS Manager approves the NCSE. Only NCS engineers who have successfully met the requirements specified in the qualification procedure can perform NCSEs and associated independent review.

The above process for NCSEs is in accordance with ANSI/ANS-8.19-1996 (ANSI, 1996).

5.2.1.7 Additional Nuclear Criticality Safety Evaluations Commitments

NCSEs also meet the following:

- The NCSEs are performed in accordance with the procedures specified and incorporated in the configuration management program.
- The NCS methodologies and technical practices in NUREG-1520 (NRC, 2002), Sections 5.4.3.4.1(10)(a), (b), (d) and (e), are used to evaluate NCS accident sequences in operations and processes.
- The acceptance criteria in NUREG-1520 (NRC, 2002), Section 3.4, as they relate to: identification of NCS accident sequences, consequences of NCS accident sequences, likelihood of NCS accident sequences, and descriptions of IROFS for NCS accident sequences are met.
- NCS controls and controlled parameters to assure that under normal and credible abnormal conditions, all nuclear processes are subcritical, including use of an approved margin of subcriticality for safety are used.
- The double contingency principle is met. The double contingency principle is used in determining NCS controls and IROFS.
- The acceptance criteria in NUREG-1520 (NRC, 2002) Section 3.4, as they relate to subcriticality of operations and margin of subcriticality for safety, are met.

5.3 CRITICALITY ACCIDENT ALARM SYSTEM (CAAS)

The facility is provided with a Criticality Accident Alarm System (CAAS) as required by 10 CFR 70.24, (CFR, 2008d). Each area where Special Nuclear Material (SNM) is handled, used, or stored are provided with CAAS coverage. The CAAS will be uniform throughout the facility for the type of radiation detected and alarm signals. Documentation shall be maintained which demonstrates the CAAS meets the requirements of 10 CFR 70.24. Emergency management measures are covered in the facility Emergency Plan.

The CAAS is provided with emergency power and is designed to remain operational during credible events or conditions, including fire, explosion, corrosive atmosphere, or seismic shock (equivalent to the site-specific design-basis earthquake or the equivalent value specified by the uniform building code).

Whenever the CAAS is not functional, compensatory measures, such as limiting access and restricting SNM movement, will be implemented. Should the CAAS coverage be lost and not restored within a specified number of hours or an equivalent level of protection has not been provided (e.g., portable CAAS system), the operations will be rendered safe (by shutdown and quarantine) if necessary. On-site guidance is provided and is based on process-specific considerations that consider applicable risk trade-off of the duration of reliance on compensatory measures versus the risk associated with process upset in shutdown.

5.4 REPORTING

The following are NCS Program commitments related to event reporting:

- A program for evaluating the criticality significance of NCS events will be provided and an apparatus will be in place for making the required notification to the NRC Operations Center. Qualified individuals will make the determination of the significance of NCS events. The determination of loss or degradation of IROFS or double contingency principle compliance will be made against the license and 10 CFR 70 Appendix A (CFR, 2008e).
- The reporting criteria of 10 CFR 70 Appendix A and the report content requirements of 10 CFR 70.50 (CFR, 2008f) will be incorporated into the facility emergency procedures.
- The necessary report based on whether the IROFS credited were lost, irrespective of whether the safety limits of the associated parameters were actually exceeded, will be issued.
- If it cannot be ascertained within one hour of whether the criteria of 10 CFR 70 Appendix A (CFR, 2008e) Paragraph (a) or (b) apply, the event will be treated as a one-hour reportable event.

5.5 REFERENCES

ANSI, 1983. Criteria for Nuclear Criticality Safety Controls in Operations with Shielding and Confinement, ANSI/ANS-8.10-1983, American National Standards Institute/American Nuclear Society, 1983.

ANSI, 1991. Nuclear Criticality Safety Training, ANSI/ANS-8.20-1991, American National Standards Institute/American Nuclear Society, 1991.

ANSI, 1996. Administrative Practices for Nuclear Criticality Safety, ANSI/ANS-8.19-1996, American National Standards Institute/American Nuclear Society, 1996.

ANSI, 1997. Nuclear Criticality Safety Based on Limiting and Controlling Moderators, ANSI/ANS-8.22-1997, American National Standards Institute/American Nuclear Society, 1997.

ANSI, 1998a. Nuclear Criticality Safety in Operations with Fissionable Materials Outside Reactors, ANSI/ANS-8.1-1998, American National Standards Institute/American Nuclear Society, 1998.

ANSI, 1998b. Guide for Nuclear Criticality Safety in the Storage of Fissile Materials, ANSI/ANS-8.7-1998, American National Standards Institute/American Nuclear Society, 1998.

AREVA, 2008. Eagle Rock Enrichment Facility – MONK8A Verification and Validation Report," December 2008.

CFR, 2008a. Title 10, Code of Federal Regulations, Section 70.61, Performance requirements, 2008.

CFR, 2008b. Title 10, Code of Federal Regulations, Section 70.64, Requirements for new facilities or new processes at existing facilities, 2008.

CFR, 2008c. Title 10, Code of Federal Regulations, Part 70, Domestic Licensing of Special Nuclear Material, 2008.

CFR, 2008d. Title 10, Code of Federal Regulations, Section 70.24, Criticality accident requirements, 2008.

CFR, 2008e. Title 10, Code of Federal Regulations, Part 70, Appendix A, Reportable Safety Events, 2008.

CFR, 2008f. Title 10, Code of Federal Regulations, Section 70.50, Reporting requirements, 2008.

DOE, 1994. Experimental Results of Water Film Formation on Various Fuel Forms from a Fire Suppression System; Ross, Rahn H., Westinghouse Savannah River Company, WSRC-MS-93-604; Aiken, SC; A document prepared for American Nuclear Society Annual Meeting, American Nuclear Society Transactions Journal; 6/19/94 through 6/23/94, 1994.

DOE, 1997. Storage Array Reflection Considerations., Haire; M.J., Jordan, W.C., Oak Ridge National Laboratory; Lockheed Martin Energy Research Corporation; Taylor, R.G., Oak Ridge Y-12 Plant; Lockheed Martin Energy Systems, Inc.; Oak Ridge, TN; for presentation at American Nuclear Society 1997 Winter Meeting, Albuquerque, NM, 1997.

Lychev, 1990. Crystalline Hydrates of Uranyl Fluoride at 20°C, Lychev, Mikhalev and Suglobov. Journal of Soviet Radiochemistry, Vol 32, 1990.

NEA, 2002. International Handbook of Evaluated Criticality Safety Benchmark Experiments, NEA/NSC/DOC(95)03, Nuclear Energy Agency, September 2002 Edition.

NRC, 1980. NUREG/CR-1071, Revision 0, “Critical Experiments with Interstitially-Moderated Arrays of Low-Enriched Uranium Oxide,” U.S. NRC, September 1980.

NRC, 1998. Nuclear Criticality Safety Standards for Fuels and Materials Facilities, Regulatory Guide 3.71, U.S. Nuclear Regulatory Commission, August 1998.

NRC, 2001. Guide for Validation of Nuclear Criticality Safety Calculational Methodology, NUREG/CR-6698, U.S. Nuclear Regulatory Commission, January 2001.

NRC, 2002. Standard Review Plan for the Review of a License Application for a Fuel Cycle Facility, NUREG-1520, U.S. Nuclear Regulatory Commission, March 2002.

NRC, 2005. Nuclear Criticality Safety Standards for Fuels and Materials Facilities, Regulatory Guide 3.71, Revision 1, U.S. Nuclear Regulatory Commission, October, 2005.

NSE, 1962. The Measurement of Σta and Other Nuclear Properties of ^{233}U and ^{235}U in Critical Aqueous Solutions, R. Gwin and D. W. Magnuson, Nuclear Science and Engineering, Volume 12, 1962.

SA, 2001. Serco Assurance, ANSWERS Software Service, “Users Guide for Version 8 ANSWERS/MONK(98) 6,” 1987-2001.

TABLES

Table 5.1-1 Safe Values for Uniform Aqueous Solutions of Enriched UO_2F_2
(Page 1 of 1)

Parameter	Critical Value k_{eff} = 1	Safe Value k_{eff} = 0.95	Safety Factor
Values for 5.0 $^w/_o$ enrichment			
Volume	30.3 L (8.0 gal)	22.9 L (6.0 gal)	0.76
Cylinder Diameter	26.6 cm (10.5 in)	23.9 cm (9.4 in)	0.90
Slab Thickness	12.8 cm (5.0 in)	11.1 cm (4.4 in)	0.87
Water Mass	18.5 kg (40.8 lb)	14.2 kg (31.3 lb)	0.77
Areal Density	11.8 g/cm^2 (24.2 lb/ft^2)	9.9 g/cm^2 (20.3 lb/ft^2)	0.84
Uranium Mass	36.7 kg U (80.9 lb U)	26.8 kg U (59.0 lb U)	0.73
-no double batching		26.4 kg U (58.2 lb U)	0.72
-double batching		16.5 kg U (36.4 lb U)	0.45
Values for 6.0 $^w/_o$ enrichment			
Volume	25.3 L (6.7 gal)	19.3 L (5.1 gal)	0.76
Cylinder Diameter	24.8 cm (9.8 in0	22.4 cm (8.8 in)	0.90
Slab Thickness	11.6 cm (4.6 in)	10.1 cm (4.0 in)	0.87
Water Mass	15.4 kg H_2O (34.0 lb H_2O)	11.9 kg H2O (26.2 lb H2O)	0.77
Areal Density	9.4 g/cm^2 (19.3 lb/ft^2)	7.9 g/cm^2 (16.2 lb/ft^2)	0.84
Uranium Mass	27 kg (59.5 lb U)	20.1 kg (44.3 lb U)	0.74
-no double batching	Not Applicable	19.4 kg U (43.0 lb U)	0.72
-double batching	Not Applicable	12.2 kg U (26.9 lb U)	0.45

Table 5.1-2 Safety Criteria for Buildings / Systems / Components
(Page 1 of 1)

Buildings/System/Components	Control Mechanism	Safety Criteria
Enrichment	Enrichment	5.0 $^{w}/_{o}$ (6.0 $^{w}/_{o}$ ^{235}U used in NCSAs)
Centrifuges	Diameter	< 22.4 cm (8.8 in)
Product Cylinders (30B)	Moderation	H < 0.92 kg (2.03 lb) – Note 1
Product Cylinders (48Y)	Moderation	H < 1.04 kg (2.29 lb) – Note 1
UF_6 Piping	Diameter	< 22.4 cm (8.8 in)
Chemical Traps	Diameter	< 22.4 cm (8.8 in)
Product Cold Trap	Diameter	< 22.4 cm (8.8 in)
Contingency Dump System Traps	Enrichment	1.5 $^{w}/_{o}$ ^{235}U
Tanks	Mass	< 12.2 kg U (26.9 lb U) – Note 2
Feed Cylinders	Enrichment	< 0.72 $^{w}/_{o}$ ^{235}U
Uranium Byproduct Cylinders	Enrichment	< 0.72 $^{w}/_{o}$ ^{235}U
UF_6 Pumps (first stage)	N/A	Safe by explicit calculation
UF_6 Pumps (second stage)	Volume	< 19.3 L (5.1 gal)
Individual Uranic Liquid Containers, e.g., Fomblin Oil Bottle, Laboratory Flask, Mop Bucket	Volume	< 19.3 L (5.1 gal)
Vacuum Cleaners Oil Containers	Volume	< 19.3 L (5.1 gal)

Notes:

1. Assumes outside storage (e.g., exposed to snow, ice, or rain).
2. Determined for double batch safe mass.

Table 5.2-1 Uranium Experiments Used for Validation
(Page 1 of 1)

MONK 8A Case Set	Case Description	Number of Experiments	Handbook Reference (NEA, 2002)
25	Low-enriched damp U_30_8 powder in cubic aluminum cans	10	NUREG/CR-1071 (NRC, 1980)
42	MARACAS Program: Polythene reflected critical configurations with low enriched and low moderated uranium dioxide powder $U(5)O_2$	18	LEU-COMP-THERM-049
43	Low-enriched uranyl nitrate solutions	3	LEU-SOL-THERM-002
51	Low-enriched uranium solutions (new STACY experiments)	7	LEU-SOL-THERM-004
63	Boron carbide absorber rods in uranyl nitrate (5.6 $^{w}/_{o}$ enriched)	3	LEU-SOL-THERM-005
69	Critical arrays of polyethylene-moderated $U(30)F_4$-Polytetrafluoroethylene one-inch cubes	29	IEU-COMP-THERM-001
71	STACY: 28 cm thick slabs of 10 $^{w}/_{o}$ enriched uranyl nitrate solutions, water reflected	7	LEU-SOL-THERM-016
80	STACY: Unreflected 10 $^{w}/_{o}$ enriched uranyl nitrate solution in a 60 cm diameter cylindrical tank	5	LEU-SOL-THERM-007
81	STACY: Concrete reflected 10 $^{w}/_{o}$ enriched uranyl nitrate solution reflected by concrete	4	LEU-SOL-THERM-008
84	STACY: Borated concrete reflected 10 $^{w}/_{o}$ enriched uranyl nitrate solution in a 60 cm diameter cylindrical tank	3	LEU-SOL-THERM-009
85	STACY: Polyethylene reflected 10 $^{w}/_{o}$ enriched uranyl nitrate solution in a 60 cm diameter cylindrical tank	4	LEU-SOL-THERM-0I0

TABLE OF CONTENTS

Page

6.0 CHEMICAL PROCESS SAFETY 6.0-1
6.1 CHEMICAL INFORMATION 6.1-1
6.1.1 Chemical Screening and Classification 6.1-1
6.1.2 Chemicals of Concern - Properties 6.1-3
6.2 CHEMICAL PROCESS INFORMATION 6.2-1
6.2.1 Chemistry and Chemical Reactions 6.2-1
6.2.2 PROCESS - GENERAL ENRICHMENT PROCESS 6.2-6
6.2.3 Process System Descriptions 6.2-7
6.2.4 Utility and Support System Descriptions 6.2-7
6.2.5 Safety Features 6.2-7
6.3 CHEMICAL HAZARDS ANALYSIS 6.3-1
6.3.1 Integrated Safety Analysis 6.3-1
6.3.2 Consequence Analysis Methodology 6.3-1
6.4 CHEMICAL SAFETY ASSURANCE 6.4-1
6.4.1 Management Structure and Concepts 6.4-1
6.4.2 System Design 6.4-1
6.4.3 Configuration Management 6.4-3
6.4.4 Maintenance 6.4-3
6.4.5 Training 6.4-4
6.4.6 Procedures 6.4-4
6.4.7 Chemical Safety Audits 6.4-5
6.4.8 Emergency Planning 6.4-6
6.4.9 Incident Investigation and Corrective Actions 6.4-6
6.5 REFERENCES 6.5-1

LIST OF TABLES

Table 6.1-1 Chemical Hazard Classification

Table 6.1-2 Chemical Inventory – Separations Building Module (SBM) and Blending, Sampling and Preparation Building (BSPB)

Table 6.1-3 Chemical Inventory – Centrifuge Assembly Building

Table 6.1-4 Chemical Inventory – Technical Support Building (TSB) and Operation Support Building (OSB)

Table 6.1-5 Chemical Inventory – Mechanical Services Building (MSB) and Electrical Services Building (ESB)

Table 6.1-6 Chemical Inventory – Exterior Areas

Table 6.1-7 Physical Properties of UF_6

Table 6.2-1 Properties of Chemical Adsorbents

Table 6.2-2 UF_6 Corrosion Rates

Table 6.2-3 Materials of Construction for UF_6 Systems

Table 6.3-1 ERPG and AEGL Level Definitions

Table 6.3-2 Licensed Material Exposure Severity Categories

Table 6.3-3 ERPG and AEGL Values for Hydrogen Fluoride

Table 6.3-4 ERPG and AEGL Values for Uranium Hexafluoride

Table 6.3-5 Health Effects of Soluble Uranium

Table 6.3-6 Definition of Consequence Severity Categories

LIST OF FIGURES

Figure 6.1-1 UF_6 Phase Diagram

Figure 6.1-2 Densities of Solid and Liquid UF_6

6.0 CHEMICAL PROCESS SAFETY

This chapter describes the AREVA Enrichment Services (AES) plan for managing chemical process safety and demonstrating that chemical process safety controls meet the requirements of 10 CFR 70 (CFR, 2008a) thereby providing reasonable assurance that the health and safety of the public and facility employees are protected. The chapter describes the chemical classification process, the hazards of chemicals of concern, process interactions with chemicals affecting licensed material and/or hazardous chemicals produced from licensed material, the methodology for evaluating the consequences of hazardous chemical release, and the chemical safety assurance features.

The Eagle Rock Enrichment Facility (EREF) chemical process safety program meets the acceptance criteria in Chapter 6 of NUREG-1520 (NRC, 2002) and complies with 10 CFR 70.61 (CFR, 2008b), 70.62 (CFR, 2008c) and 70.64 (CFR, 2008d).

The chemical process safety program for the Eagle Rock Enrichment Facility (EREF) is similar to attributes for chemical safety which were submitted for Nuclear Regulatory Commission (NRC) review in the LES license application for the National Enrichment Facility (LES, 2003). The NRC staff evaluated these prior attributes and concluded in NUREG-1827 (NRC, 2005) that the applicant's plan for managing chemical-process safety and chemical-process-safety controls meets the requirements of 10 CFR Parts 30, 40, and 70 (CFR, 2008j; CFR, 2008k; CFR, 2008a), and provides reasonable assurance that the public health and safety, and the environment, will be protected.

There are no substantive differences between the EREF chemical process safety program and measures prescribed for the National Enrichment Facility (NEF). The NEF and EREF differ due to site characteristics including property boundary, facility layout, variations in building and area names, more exterior cylinder storage pads, different building construction types due to differing building code requirements and natural phenomenon hazard (NPH) parameters, as well as minor differences in UF_6 operations and process layout.

The differences in this Chapter are as follows:

- Tables 6.1-1 through 6.1-6 are grouped differently reflecting the changes in site layout and additional exterior cylinder storage locations. Modifications were also made to provide inventories by floor rather than by room in some cases and to aggregate small quantities of hydrocarbon solvents and oil sludges. EREF also did not list waste streams that did not have hazardous classification as they have no potential process safety impact.
- Unlike NEF, the EREF does not have a PFPE oil recovery system (referred to as Fomblin oil recovery for NEF).
- Unlike NEF, the EREF does not have a Chilled Water System. Halocarbon refrigerants will be used for most air cooling. Where water is a heat rejection medium, it is from the Process Water System.
- There are variations in the values used for assessing the severity of UF_6 release to receptors at the controlled area boundary. NEF converted published AEGLs for UF_6 into AEGLs for soluble U to account for the impact that solubility has on chemical toxicity. EREF uses published soluble uranium dose values to account for U toxicity. Both methods are predictive of the health effects expected from low dose soluble uranium uptake. For the postulated accidents, UF_6 will have reacted to form HF and uranyl fluoride and will not exist as UF_6 at the boundary.

- EREF uses the 10-minute AEGL values for assessing worker exposure for all lesser duration worker releases. These values are conservative compared to initial NEF values.

The information provided in this chapter, the corresponding regulatory requirement and the section of NUREG-1520 (NRC, 2002) Chapter 6 in which the NRC acceptance criteria are presented are summarized below:

Information Category and Requirement	10 CFR 70 Citation	NUREG-1520 Chapter 6 Reference
Section 6.1 Chemical Information		
• Properties and Hazards	70.62(c)(1)(ii)	6.4.3.1
Section 6.2 Chemical Process Information		
• General Information	70.65(b)(3)	6.4.3.1
• Design Basis, Materials, Parameters	70.62(b)	6.4.3.1
• Process Chemistry, Chemical Interaction		6.4.3.2
Section 6.3 Chemical Hazards Analysis		
• Methodology, Scenarios, Evaluation	70.65(b)(3)	6.4.3.2
Section 6.4 Chemical Safety Assurance		
• Management, Configuration Control, Design, BDC, Maintenance, Training, Procedures, Audits, Emergency Planning, Incident Investigation	70.65(b)(4)	6.4.3.2 6.4.3.3

6.1 CHEMICAL INFORMATION

This section addresses the criteria utilized to classify all site chemicals based on their potential for harm and as defined by regulatory requirements. It also presents information on the properties of those chemicals.

6.1.1 Chemical Screening and Classification

Table 6.1-1, Chemical Hazard Classification, provides the listing of chemicals that are expected to be in use at the EREF in quantities where they require stored inventory. Chemical formulas in this Chapter utilize subscripting per standard convention. The hazardous classification of each chemical is presented as it is defined in the International Fire Code (IFC), 2006 edition (ICC, 2006). Although not expressly identified as a hazardous classification in the IFC, a column has also been provided to identify chemicals that are radioactive.

Each chemical has been classified into one of three categories (EREF Classes): Chemicals of Concern (Class 1), Interaction Chemicals (Class 2), or Incidental Chemicals (Class 3).

The definition of each classification is provided below.

Tables 6.1-2 through 6.1-6 are the basic chemical inventories for the enrichment-related process structures and support areas at the facility. Each of these tables lists a major facility structure or area and the associated inventory of significant chemicals stored or used for each area. These tables do not include the listing of all incidental effluents, sludges, wastes and waste streams, and other incidental chemicals characterized as Class 3 materials that may be present. These chemicals are not a process safety concern as they have no ability to impact licensed material systems in a manner affecting 10 CFR 70.61 (CFR, 2008b) performance requirements. Inventories of solid wastes, gaseous and liquid effluents, sludges, and other chemical containing waste streams that will be processed and/or discharged are detailed in Chapter 2 of the Environmental Report.

6.1.1.1 Chemicals of Concern (Class 1)

Chemicals of Concern (EREF Class 1) are determined based on one or more characteristics of the chemical and/or the quantity in storage/use at the facility. For licensed material or hazardous chemicals produced from licensed materials, chemicals of concern are those that, in the event of release have the potential to exceed any of the concentrations defined in 10 CFR 70 (CFR, 2008a) as listed below.

<u>High Risk Chemicals of Concern</u>

1. An acute worker dose of 1 Sv (100 rem) or greater total effective dose equivalent.
2. An acute dose of 0.25 Sv (25 rem) or greater total effective dose equivalent to any individual located outside the controlled area.
3. An intake of 30 mg or greater of uranium in soluble form by any individual located outside the controlled area.
4. An acute chemical exposure to an individual from licensed material or hazardous chemicals produced from licensed material that:
   - (i) Could endanger the life of a worker, or
   - (ii) Could lead to irreversible or other serious, long-lasting health effects to any individual located outside the controlled area.

Intermediate Risk Chemicals of Concern

1. An acute worker dose of 0.25 Sv (25 rem) or greater total effective dose equivalent.
2. An acute dose of 0.05 Sv (5 rem) or greater total effective dose equivalent to any individual located outside the controlled area.
3. A 24-hour averaged release of radioactive material outside the restricted area in concentrations exceeding 5000 times the values in Table 2 of Appendix B to 10 CFR 20 (CFR, 2008e).
4. An acute chemical exposure to an individual from licensed material or hazardous chemicals produced from licensed material that:
   - (i) Could lead to irreversible or other serious, long-lasting health effects to a worker, or
   - (ii) Could cause mild transient health effects to any individual located outside the controlled area.

Non-Licensed Chemicals of Concern

For those chemicals that are not related to licensed materials, chemicals of concern are those that are listed and handled above threshold quantities of either of the following standards:

1. 29 CFR 1910.119 (CFR, 2008f) – OSHA Process Safety Management
2. 40 CFR 68 (CFR, 2008g) – EPA Risk Management Program.

These chemicals represent, based on their inherent toxic, reactive, or flammable properties, a potential for large, airborne chemical release and/or acute chemical exposure to an individual that:

- (i) Could endanger the life of a worker, or
- (ii) Could lead to irreversible or other serious, long-lasting health effects to any individual located outside the controlled area.

It is noted here, that uranium hexafluoride (UF_6) is the only licensed material-related chemical of concern (EREF Class 1) that will be used at the facility. There are no non-licensed chemicals of concern at the facility.

6.1.1.2 Interaction Chemicals (Class 2)

Interaction chemicals (EREF Class 2) are those chemicals/chemical systems that require evaluation for their potential to precipitate or propagate accidents in chemical of concern (EREF Class 1) systems, but by themselves are not chemicals of concern.

6.1.1.3 Incidental Chemicals (Class 3)

The facility will use other chemicals that are neither chemicals of concern nor interaction chemicals. Some of these incidental chemicals (EREF Class 3) include those that have the potential to result in injurious occupational and/or environmental exposure, but represent no potential for acute exposure to the public and which via their nature, quantity, and/or use, have no potential for impacting chemicals of concern (EREF Class 1).

These chemicals will not be subject to chemical process safety controls. Controls will be placed on incidental chemical storage, use and handling as necessary and as follows:

1. General occupational chemical safety controls will be in place for protection of facility employees in the storage, handling, and use of all chemicals as required by 29 CFR 1910 (CFR, 2008h)
2. Environmental protection controls required to prevent and/or mitigate environmental damage due to spills and discharges and to control anticipated effluents and waste are detailed in Chapter 9, Environmental Protection, and the EREF Environmental Report.

6.1.2 Chemicals of Concern - Properties

This section summarizes the chemical properties for chemicals of concern and their key byproducts.

6.1.2.1 Uranium Hexafluoride - Chemical Properties

6.1.2.1.1 Physical

Uranium hexafluoride (UF_6) is a chemical compound consisting of one atom of uranium combined with six atoms of fluorine. It is the chemical form of uranium that is used during the uranium enrichment process.

UF_6 can be a solid, liquid, or gas, depending on its temperature and pressure. Multiple phases coexist in equilibrium only under exact combinations of temperature and pressure. These properties are shown in Figure 6.1-1, UF_6 Phase Diagram, which presents the different physical forms of UF_6 as a function of temperature and pressure. The three phases are identified as regions on the diagram separated by lines representing a plot of equilibrium combinations of temperature and pressure. These boundaries all converge at one unique point on the diagram, called the triple point, where all three phases coexist in equilibrium. The triple point of UF_6 is 64°C (147°F) and 152 kPa (22 psia).

Liquid UF_6 is formed only at temperatures and pressures greater than the triple point. Below the triple point, solid UF_6 will change phase directly to UF_6 gas (sublimation) when the temperature is raised and/or the pressure is lowered at continuous points along the solid/gas interface line. This will occur without the UF_6 progressing through a liquid phase. Solid UF_6 is a white, dense, crystalline material that resembles rock salt. Both liquid and gaseous UF_6 are colorless.

Pure UF_6 follows its phase diagram consistently regardless of isotopic content. Impurities in a UF_6 cylinder will cause deviations in the normal phase behavior. The most common gaseous impurities in UF_6 feed are air and hydrogen fluoride (HF) which are generated from the reaction of UF_6 with moisture in the air. Since these light gas impurities have a higher vapor pressure than UF_6, their presence can be detected by measuring the static pressure of cylinders and comparing the results to the UF_6 phase diagram (when the UF_6 temperature is known).

UF_6 exhibits significant expansion when going from solid to liquid phase and continues to expand as the liquid temperature increases. This is illustrated in Figure 6.1-2, Densities of Solid and Liquid UF_6. This figure shows that UF_6 expands roughly 53% going from a solid at 21°C (70°F) to a liquid at 113°C (235°F). Department of Transportation cylinder fill limits are based on UF_6 density at 121°C (250°F) and provide five percent ullage or free volume as a safety factor to prevent hydraulic rupture due to heating.

Other physical properties of UF_6 are presented in Table 6.1-7, Physical Properties of UF_6.

6.1.2.1.2 Reactivity

UF_6 does not react with oxygen, nitrogen, carbon dioxide, or dry air, but it does react with water. For this reason, UF_6 is handled in leak tight containers and processing equipment. When UF_6 comes into contact with water, such as the water vapor in the air, the UF_6 and water react, forming hydrogen fluoride (HF) gas and a solid uranium-oxyfluoride compound (UO_2F_2) which is commonly referred to as uranyl fluoride. Additional information on UF_6 reactions with water is provided in Section 6.2.1, Chemistry and Chemical Reactions.

UF_6 is also incompatible with a number of other chemicals including hydrocarbons and aromatics but none of these chemicals are used in or within proximity of UF_6 process systems.

6.1.2.1.3 Toxicological

If UF_6 is released to the atmosphere, the uranium compounds and HF that are formed by reaction with moisture in the air are chemically toxic. Uranium is a heavy metal that, in addition to being radioactive, can have toxic chemical effects (primarily on the kidneys) if it enters the bloodstream by means of ingestion or inhalation. HF is an extremely corrosive gas that can damage the lungs and cause death if inhaled at high enough concentrations. Additional information on the toxicological parameters used for evaluating exposure is provided in Section 6.3, Chemical Hazards Analysis.

6.1.2.1.4 Flammability

UF_6 is not flammable and does not disassociate to flammable constituents under conditions at which it will be handled at the facility.

6.1.2.2 Hydrogen Fluoride - Chemical Properties

Hydrogen fluoride (HF) is not a direct chemical of concern (EREF Class 1), however, it is one of two byproducts of concern that would be developed in the event of most accident scenarios at the facility. Understanding its properties therefore is important in evaluating chemical process conditions.

6.1.2.2.1 Physical

HF can exist as a gas or as a liquid under pressure (anhydrous hydrogen fluoride) or as an aqueous solution of varying strengths (aqueous hydrofluoric acid). HF vapors are colorless with a pungent odor which is detectable at concentrations above 1 ppm. It is soluble in water with a release of heat.

Releases of anhydrous hydrogen fluoride would typically fume (due to the reaction with water vapor) so that any significant release would be visible at the point of release and in the immediate vicinity.

6.1.2.2.2 Reactivity

In both gaseous and aqueous form, HF is extremely reactive, attacking certain metals, glass and other silicon-containing components, leather and natural rubber. Additional information regarding the corrosion properties and metal attack are provided in Section 6.2.1.3, UF_6 and Construction Materials.

6.1.2.2.3 Toxicological

HF in both gaseous and aqueous forms is strongly corrosive and causes severe burns to the skin, eyes and mucous membranes, and severe respiratory irritation.

Inhalation of HF causes an intolerable prickling, burning sensation in the nose and throat, with cough and pain beneath the sternum. Nausea, vomiting, diarrhea and ulceration of the gums may also occur. In low concentrations, irritation of the nasal passages, dryness, bleeding from the nose and sinus disorders may result, while continued exposure can lead to ulceration and perforation of the nasal septum. Exposure to high concentrations can cause laryngitis, bronchitis and pulmonary edema which may not become apparent until 12-24 hours after the exposure.

Chronic exposure to excessive quantities of gaseous or particulate fluoride results in nausea, vomiting, loss of appetite, and diarrhea or constipation. Fluorosis and other chronic effects may result from significant acute exposures. Systemic fluoride poisoning can cause hypocalcaemia which may lead to cardiac arrhythmias and/or renal failure. Chronic exposure to gaseous or particulate fluoride is not expected at the facility.

Skin exposure to concentrated liquid HF will result in aggressive chemical burns. Burns from exposure to dilute solutions (1-20%) of hydrofluoric acid (aqueous HF) or moderate concentrations of vapor may not be immediately painful or visible. Symptoms of skin exposure include immediate or delayed throbbing, burning pain followed by localized destruction of tissue and blood vessels that may penetrate to the bone. Exposure to liquid forms of HF is not expected at the facility.

Ocular exposure to HF causes a burning sensation, redness, and secretion. Splashes of aqueous hydrofluoric acid to the eye rapidly produce conjunctivitis, keratitis, and more serious destructive effects but these are not expected at the facility.

6.1.2.2.4 Flammability

HF is not flammable or combustible. HF can react exothermically with water to generate sufficient heat to ignite nearby combustibles. HF in reaction with certain metals can offgas hydrogen which is flammable. Both of these reactions would be more typical for bulk, concentrated HF interaction where large masses (i.e., bulk HF storage) of material are involved. These types of interactions are not expected at the facility.

6.1.2.3 Uranyl Fluoride - Chemical Properties

Uranyl fluoride (UO_2F_2) is not a direct chemical of concern (EREF Class 1), however, it is the second of two byproducts of concern (HF is the other) that would be developed in the event of a UF_6 release at the facility. Understanding its properties therefore is important in evaluating chemical process conditions.

6.1.2.3.1 Physical

UO_2F_2 is an intermediate in the conversion of UF_6 to a uranium oxide or metal form and is a direct product of the reaction of UF_6 with moisture in the air. It exists as a yellow, hygroscopic solid. UO_2F_2 formation and dispersion is governed by the conditions of the atmosphere in which the release is occurring. UF_6 will be continually hydrolyzed in the presence of water vapor. The resulting UF_6/HF cloud will include UO_2F_2 particulate matter within the gaseous stream. As this stream diffuses into larger volumes and additional UF_6 hydrolysis occurs, UO_2F_2 particulate will

settle on surfaces as a solid flake-like compound. This deposition will occur within piping/equipment, on lower surfaces within enclosures/rooms, and/or on the ground – wherever the UF_6 hydrolysis reaction is occurring.

6.1.2.3.2 Reactivity

UO_2F_2 is reported to be stable in air to 300°C (570°F). It does not have a melting point because it undergoes thermal decomposition to triuranium octoxide (U_3O_8) above this temperature. When heated to decomposition, UO_2F_2 emits toxic fluoride fumes. UO_2F_2 is hygroscopic and water-soluble and will change in color from brilliant orange to yellow after reacting with water.

6.1.2.3.3 Toxicological

UO_2F_2 is radiologically and chemically toxic due to its uranium content and solubility. Once inhaled, uranyl fluoride is easily absorbed into the bloodstream because of its solubility. If large quantities are inhaled, the uranium in the uranyl complex acts as a heavy metal poison that affects the kidneys. Because of low specific activity values, the radiological toxicity of UF_6 and the UO_2F_2 byproduct are typically of less concern than the chemical toxicity.

6.1.2.3.4 Flammability

UO_2F_2 is not combustible and will not decompose to combustible constituents under conditions at which it will be handled at the facility.

6.2 CHEMICAL PROCESS INFORMATION

This section characterizes chemical reactions between chemicals of concern and interaction chemicals and other substances as applicable. This section also provides a basic discussion of the chemical processes associated with UF_6 process systems.

6.2.1 Chemistry and Chemical Reactions

Although the separation of isotopes is a physical rather than chemical process, chemical principles play an important role in the design of the facility. The phase behavior of UF_6 is critical to the design of all aspects of the plant. UF_6 has a high affinity for water and will react exothermically with water and water vapor in the air. The products of UF_6 hydrolysis, solid UO_2F_2 and gaseous HF, are both toxic. HF is also corrosive, particularly in the presence of water vapor. Because this chemical reaction results in undesirable by-products, UF_6 is isolated from moisture in the air through proper design of primary containment (i.e., piping, components, and cylinders).

Other chemical reactions occur in systems that decontaminate equipment, remove contaminants from effluent streams, and as part of other cleansing processes. Side reactions can include the corrosion and deterioration of construction materials, which influences their specification. These reactions are further described below.

6.2.1.1 UF_6 and Water

Liquid and gaseous UF_6 react rapidly with water and water vapor as does the exposed surface of solid UF_6. UF_6 reacts with water so rapidly that the HF formed is always anhydrous when in the presence of UF_6, significantly reducing its corrosive potential in cylinders, piping, and equipment. The reaction of gaseous UF_6 with water vapor at elevated temperatures is shown in Equation 6.2-1.

$$\underset{\text{(gas)}}{UF_6} + \underset{\text{(vapor)}}{2\,H_2O} \rightarrow \underset{\text{(solid)}}{UO_2F_2} + \underset{\text{(gas)}}{4HF} + \text{heat} \qquad \text{(Eq. 6.2-1)}$$

At room temperature, depending on the relative humidity of the air, the products of this reaction are UO_2F_2 hydrates and HF- H_2O fog, which will be seen as a white cloud. A typical reaction with excess water is given in Equation 6.2-2.

$$\underset{\text{(gas)}}{UF_6} + \underset{\text{(vapor)}}{(2+4x)H_2O)} \rightarrow \underset{\text{(solid)}}{UO_2F_2 *2\,H_2O} + \underset{\text{(fog)}}{4HF*x\,H_2O} + \text{heat} \qquad \text{(Eq. 6.2-2)}$$

If, because of extremely low humidity, the HF- H_2O fog is not formed, the finely divided uranyl fluoride (UO_2F_2) causes only a faint haze. UO_2F_2 is a water-soluble, yellow solid whose exact coloring depends on the degree of hydration as well as the particle size.

The heat release for the reaction in Equation 6.2-1 is 288.4 kJ/kg (124 BTU/lbm) of UF_6 gas reacted. The heat release is much larger if the UO_2F_2 is hydrated and HF-H2O fog is formed with a heat release of 2,459 kJ/kg (1,057 BTU/lbm) of UF_6 vapor.

These reactions, if occurring in the gaseous phase at ambient or higher temperatures, are very rapid, near instantaneous. Continuing reactions between solid UF_6 and excess water vapor occur more slowly as a uranyl fluoride layer will form on surface of the solid UF_6 which inhibits the rate of chemical reaction.

UF_6 reactions with interaction chemicals are discussed below. These include chemical reactions associated with lubricants and other chemicals directly exposed to UF_6, as well as

chemicals used capture trace UF_6, uranium compounds, and HF from effluent streams. UF_6 reactions with materials of construction are addressed in Section 6.2.1.3, UF_6 and Construction Material.

6.2.1.2 UF_6 and Interaction Chemicals

The chemistry of UF_6 is significantly affected by its fluorination and oxidation potential. Many of the chemical properties of UF_6 are attributable to the stability of the UO_2++ ion, which permits reactions with water, oxides, and salts containing oxygen-bearing anions such as SO_4--, NO_3--, and CO_3-- without liberation of the O_2 molecule.

The following subsection describes potential chemical interactions between the UF_6 process streams and interaction chemicals. Detailed descriptions of the chemical and/or utility systems utilizing interaction chemicals can be found in Chapter 3, Integrated Safety Analysis Summary.

6.2.1.2.1 PFPE Oil

The reaction of UF_6 with hydrocarbons is undesirable and can be violent. Gaseous UF_6 reacts with hydrocarbons to form a black residue of uranium-carbon compounds. Hydrocarbons can be explosively oxidized if they are mixed with UF_6 in the liquid phase or at elevated temperatures. It is for this reason that non-fluorinated hydrocarbon lubricants are not utilized in any UF_6 system at the EREF.

UF_6 vacuum pumps are lubricated using perfluorinated polyether (PFPE) oil. PFPE oil is inert, fully fluorinated and does not react with UF_6 under any operating conditions.

Small quantities of uranium compounds and traces of hydrocarbons may be contained in PFPE oil used in the UF_6 vacuum pumping systems. The UF_6 degrades in the oil or reacts with trace hydrocarbons to form crystalline compounds – primarily uranyl fluoride (UO_2F_2) and uranium tetrafluoride (UF_4) particles – that gradually thicken the oil and reduce pump capacity.

Unlike NEF, the EREF does not have a PFPE oil recovery system (referred to as Fomblin oil recovery for NEF).

Failures associated with PFPE oil were evaluated in the Integrated Safety Analysis.

6.2.1.2.2 Chemical Traps - Activated Carbon, Aluminum Oxide, and Sodium Fluoride

Adsorption is the attraction of gas molecules to the surface of an activated solid. There are two classifications of adsorption: physical and chemical. At ordinary temperatures, adsorption is usually caused by molecular forces rather than by the formation of chemical bonds. In this type of adsorption, called physical adsorption, very little heat is evolved. If a chemical reaction takes place between the gas and the solid surface, the process is known as chemisorption. In chemisorption, the reaction between surface and gas molecules occurs in a stoichiometric manner and heat is liberated during the reaction.

Chemisorption is used in the removal of UF_6 and HF from gaseous effluent streams. It is also used to remove oil mist from vacuum pumps operating upstream of gaseous effluent ventilation systems. Adsorbent materials are placed on stationary beds in chemical traps downstream of the various cold traps. These materials capture HF and the trace amounts of UF_6 that escape desublimation during feed purification or during venting of residual UF_6 contained in hoses and/or piping that is bled down before disconnection.

The chemical traps are placed in series downstream of the cold traps in the exhaust streams to the Gaseous Effluent Ventilation Systems (GEVS) and may include one or more of a series of two different types of chemical traps. The first type of trap contains a charge of activated carbon to capture the small amounts of UF_6 that escape desublimation. Since chemisorption is a pressure sensitive process, HF is not fully adsorbed on carbon at low pressures. This necessitates a second type of trap containing a charge of aluminum oxide (Al_2O_3) to remove HF from the gaseous effluent stream. One or more of a series of these individual or mixed bed (part activated carbon/part activated alumina) traps is used depending on the process system being served. Additionally, an alumina trap is present on the inlet of the vacuum pumps which discharge to the GEVS to prevent any of the pump oil from migrating back into the UF_6 cold traps.

Chemisorption of UF_6 on activated carbon evolves considerable thermal energy. This is not normally a problem in the chemical traps downstream of the cold traps because very little UF_6 escapes desublimation. If multiple equipment failures and/or operator errors occur, significant quantities of UF_6 could enter the chemical traps containing activated carbon. This could cause significant overheating leading to release. Failures associated with the carbon traps were evaluated in the Integrated Safety Analysis.

Activated carbon cannot be used in the Dump System because the relatively high UF_6 flow rates during this non-routine operation could lead to severe overheating. A chemical trap containing sodium fluoride (NaF) is installed in the contingency dump flow path to trap UF_6. NaF is used because the heat of UF_6 chemisorption on NaF is significantly lower than the heat of UF_6 chemisorption on activated carbon. Failures associated with the NaF traps were evaluated in the Integrated Safety Analysis.

There are no specific concerns with heat of adsorption of either UF_6 or HF with Al_2O_3. Failures associated with the aluminum oxide traps were evaluated in the Integrated Safety Analysis.

The properties of these chemical adsorbents are provided in Table 6.2-1, Properties of Chemical Adsorbents.

6.2.1.2.3 Decontamination – Citric Acid

Contaminated components (e.g., pumps, valves, piping), once they are removed from the process areas, undergo decontamination. Oily parts are washed in a hot water wash that will remove the bulk of oil including residual uranic compounds. Once the hot water wash is complete, citric acid is used to remove residual uranic fluoride compound layers that are present on the component surfaces. The reaction of the uranium compounds with the citric acid solution produces various uranyl citrate complexes. After citric acid cleansing, the decontaminated component is subject to two additional water wash/rinse cycles. The entire decontamination operation is conducted in small batches on individual components.

Decontamination of sample bottles, valves, and flexible connectors is also accomplished using citric acid.

Decontamination was evaluated in the Integrated Safety Analysis. Adequate personnel protective features are in place for safely handling decontamination chemicals and byproducts.

6.2.1.2.4 Nitrogen

Gaseous nitrogen is used in the UF_6 systems for purging and filling lines that have been exposed to atmosphere for any of several reasons including: connection and disconnection of cylinders, preparing lines/components for maintenance, providing an air-excluding gaseous

inventory for system vacuum pumps, and filling the interstitial space of the liquid sampling autoclave (secondary containment) prior to cylinder liquefaction.

The nitrogen system consists of a liquid nitrogen bulk storage vessel, vaporizer, gaseous nitrogen heater, liquid and gaseous nitrogen distribution lines and instrumentation. Liquid nitrogen is delivered by tanker and stored in the storage vessel.

Nitrogen is not reactive with UF_6 in any plant operational condition. Failures of the nitrogen system were evaluated in the Integrated Safety Analysis.

6.2.1.2.5 Silicone Oil

Silicone oil is used as a heat exchange medium for the heating/chilling of various cold traps. This oil is external to the UF_6 process stream in all cases and is not expected to interact with UF_6. Failures in the heating/chilling systems were evaluated in the Integrated Safety Analysis.

6.2.1.2.6 Halocarbon Refrigerants

Halocarbon refrigerants (including R23 trifluoromethane, R404A fluoromethane blend, and R507 penta/trifluoromethane) are used in individual package chillers that will provide cooling of UF_6 cylinders and/or silicone oil heat exchange media for take-off stations and cold traps. These halocarbons were selected due to good heat transfer properties, because they satisfy environmental restrictions regarding ozone depletion, and are non-flammable. All halocarbon refrigerants are external to the UF_6 process stream in all cases and are not expected to interact with UF_6. Failures in the heating/chilling systems were evaluated in the Integrated Safety Analysis.

Unlike NEF, the EREF does not have a Chilled Water System. Halocarbon refrigerants will be used for most air cooling. Where water is a heat rejection medium, it is from the Process Water System.

6.2.1.2.7 Centrifuge Cooling Water

Centrifuge cooling water is provided from the Centrifuge Cooling Water Distribution System. The function of this system is to provide a supply of deionized cooling water to the cooling coils of the centrifuges. This system provides stringent control over the operating temperature of the centrifuges to enable their efficient operation. Centrifuge cooling water is external to the UF_6 process stream in all cases and is not expected to interact with UF_6. Failures in the centrifuge cooling water distribution system were evaluated in the Integrated Safety Analysis.

6.2.1.3 UF_6 and Construction Materials

The corrosion of metallic plant components and the deterioration of non-metallic sealing materials is avoided by specifying resistant materials of construction and by controlling process fluid purity.

Direct chemical attack by the process fluid on metallic components is the result of chemical reactions. In many cases, the affinity of the process fluid for the metal produces metallic compounds, suggesting that rapid destruction of the metal would take place. This is usually prevented by the formation of a protective layer on the surface of the metal.

Deterioration of non-metallic materials is caused by exposure to process fluids and conditions. Materials used in gaskets, valves, flexible hoses, and other sealants must be sufficiently inert to have a useful service life.

UF_6 and some of its reaction products are potentially corrosive substances, particularly HF. UF_6 is a fluorinating agent that reacts with most metals. The reaction between UF_6 and metals such as nickel, copper, and aluminum produces a protective fluoride film over the metal that inhibits further reaction. These materials are therefore relatively inert to UF_6 corrosion after passivation and are suitable for UF_6 service. Aluminum is used as piping material for UF_6 systems because it is especially resistant to corrosion in the presence of UF_6. Carbon steels and stainless steels can be attacked by UF_6 at elevated temperatures but are not significantly affected by the presence of UF_6 at the operating temperatures for the facility.

Light gas impurities such as HF and air are removed from UF_6 during the purification process. Although HF is a highly corrosive substance when in solution with water as aqueous hydrofluoric acid, it contributes very little to metal corrosion when in the presence of UF_6. This is due to the fact that UF_6 reacts with water so rapidly that HF remains anhydrous when in the presence of UF_6.

Corrosion rates of certain metals in contact with UF_6 are presented in Table 6.2-2, UF_6 Corrosion Rates, for two different temperatures. This data was provided in the original Safety Analysis Report for the Claiborne Enrichment Center (LES, 1993).

Resistant metal such as stainless steel are used in valve bellows and flex hoses. Aluminum piping is bent to minimize the use of fittings. Connections are welded to minimize the use of flanges and gaskets. As a standard practice, the use of sealant materials is minimized to reduce the number of potential leak paths.

Non-metallic materials are required to seal connections in UF_6 systems to facilitate valve and instrument replacement as well as cylinder connections. They are also used in valve packing and seating applications. All gasketing and packing material used at the facility will be confirmed as appropriate for UF_6 services. Typical materials that are resistant to UF_6 through the range of plant operating conditions include butyl rubber, Teflon, Viton, and Kel-F.

The materials used to contain UF_6 are provided in Table 6.2-3, Materials of Construction for UF_6 Systems. The cylinders to be used at the facility are standard Department of Transportation approved containers for the transport and storage of UF_6, designed and fabricated in accordance with ANSI N14.1 (ANSI, applicable version). The nominal and minimum (for continued service) wall thickness for cylinders listed in Table 6.2-3, are taken from this standard.

The remaining system materials are relatively inert in the presence of UF_6 and the corrosion rates given in Table 6.2-2, indicate that these materials are acceptable for UF_6 service over the life of the plant.

As shown in Table 6.2-3, the cylinders used to store and transport UF_6 are made of carbon steel. Tails cylinders are stored outside in open air where they are exposed to the elements. Feed and product cylinders will also be stored outside but only for durations consistent with shipping receipt and in-processing (feed) and out-processing and off-site shipment to customers (product). Feed and product cylinders will be subject to short duration exterior storage (months) and will be inspected in accordance with requirements of DOT regulations upon receipt and prior to shipment to customers.

Atmospheric corrosion is determined by the exposure to moisture (e.g., rain, snow, atmospheric humidity) and the impurities in the air (such as sulfur). The corrosion rate on the outside

surfaces of the carbon steel cylinders therefore varies accordingly with these conditions. Carbon steel storage cylinders are painted to provide a corrosion barrier to external elements.

External corrosion can occur on the outside cylinder surface and at interface points such as the contact point with the resting blocks and in skirt depressions (at the cylinder ends). According to a paper entitled Monitoring of Corrosion in ORGDP Cylinder Yards (DOE, 1988), the average corrosion rate experienced by cylinders is less than 0.051 mm/yr (2 mils/yr). This corrosion rate is almost exclusively due to exterior rust on the carbon steel. Another report – Prediction of External Corrosion for Steel Cylinders – 2001 Report (ORNL, 2001) – sampled exterior steel cylinders (30A) at Oak Ridge National Laboratories that had been subject to intermittent contact with the ground and found to have average corrosion rates of approximately 0.041 mm/yr (1.6 mils/yr). These values indicate that the expected service life would be greater than 50 years. These rates are conservative based on the tails storage arrangement at the EREF. Tails cylinders are subject to exterior weather conditions and will be periodically inspected to assess corrosion and corrosion rate.

6.2.2 PROCESS - GENERAL ENRICHMENT PROCESS

Uranium enrichment is the process by which the isotopic composition of uranium is modified. Natural uranium consists of three isotopes, uranium 234 (^{234}U), uranium 235 (^{235}U), and uranium 238 (^{238}U), approximately 0.0058 $^{w}/_{o}$, 0.711 $^{w}/_{o}$ and 99.28 $^{w}/_{o}$ respectively. ^{235}U, unlike ^{238}U, is fissile and can sustain a nuclear chain reaction. Light water nuclear power plants (the type in the United States) normally operate on fuel containing between 2 w/o and 5 $^{w}/_{o}$ ^{235}U (low-enriched uranium); therefore, before natural uranium is used in uranium fuel for light water reactors it undergoes "enrichment."

In performing this enrichment, the EREF will receive and enrich natural uranium hexafluoride (UF_6) feed. The isotopes are separated in gas centrifuges arranged in arrays called cascades.

This process will result in the natural UF_6 being mechanically separated into two streams: (1) a product stream which is selectable up to a maximum 5 $^{w}/_{o}$ ^{235}U enrichment, and (2) a tails stream which is depleted to low percentages of ^{235}U (0.32 w/o on average). No chemical reaction occurs during enrichment. Other processes at the plant include product blending, homogenizing and liquid sampling to ensure compliance with customer requirements and to ensure a quality product.

The enrichment process is comprised of the following major systems:

- UF_6 Feed System
- Cascade System
- Product Take-Off System
- Tails Take-Off System
- Product Blending System
- Product Liquid Sampling System.

UF_6 is delivered to the plant in ANSI N14.1 (ANSI, applicable version) standard 48Y international transit cylinders, which are placed in a feed station and connected to the plant via a common manifold. Heated air is circulated around the cylinder to sublime UF_6 gas from the solid phase. The gas is flow controlled through a pressure control system for distribution to the cascade system at subatmospheric pressure.

Individual centrifuges are not able to produce the desired product and tails concentration in a single step. They are therefore grouped together in series and in parallel to form arrays known as cascades. A typical cascade is comprised of many centrifuges.

UF_6 is drawn through cascades with vacuum pumps and compressed to a higher subatmospheric pressure at which it can desublime in the receiving cylinders. Highly reliable UF_6 resistant pumps will be used for transferring the process gas.

Tails material and product material are desublimed at separate chilled take-off stations. Tails material is desublimed into 48Y cylinders. Product material is desublimed into either 48Y or smaller 30B cylinders.

With the exception of liquid sampling operations, the entire enrichment process operates at subatmospheric pressure. This safety feature helps ensure that releases of UF_6 or HF are minimized because leakage would typically be inward to the system. During sampling operations, UF_6 is liquefied within an autoclave which provides the heating required to homogenize the material for sampling. The autoclave is a rated pressure vessel which serves as secondary containment for the UF_6 product cylinders while the UF_6 is in a liquid state.

There are numerous subsystems associated with each of the major enrichment process systems as well as other facility support and utility systems. These include systems supporting venting, cooling, electrical power, air and water supply, instrumentation and control and handling functions among others.

6.2.3 Process System Descriptions

Detailed system descriptions and design information for enrichment process and process support systems are provided in the EREF Integrated Safety Analysis (ISA) Summary. These descriptions include information on process technology including materials of construction, process parameters (e.g., flow, temperature, pressure, etc.), key instrumentation and control including alarms/interlocks, and items relied on for safety (IROFS).

6.2.4 Utility and Support System Descriptions

The UF_6 Enrichment Systems also interface with a number of supporting utility systems. Detailed system descriptions and design information for these utility and support systems are provided in the EREF ISA Summary. These descriptions include information on process technology including materials of construction; process parameters (e.g., flow, temperature, pressure, etc.), key instrumentation and control including alarms/interlocks, and IROFS.

6.2.5 Safety Features

There are a number of safety features in place to help prevent, detect, and mitigate potential releases of UF_6. Some of these features are classified as IROFS as determined in the ISA. A listing of IROFS associated with process, utility and supporting systems as well as those applicable to the facility and its operations (e.g., administrative controls) is presented in the EREF ISA Summary.

In addition to IROFS, there are other process system features that are intended to protect systems from damage that would result in an economic loss. Many of these features have a secondary benefit of enhancing safety by detecting, alarming, and/or interlocking process equipment – either prior to or subsequent to failures that result in a release of material.

6.3 CHEMICAL HAZARDS ANALYSIS

6.3.1 Integrated Safety Analysis

AES has prepared an Integrated Safety Analysis (ISA) as required under 10 CFR 70.62 (CFR, 2008c). The ISA:

- Provides a list of the accident sequences which have the potential to result in radiological and non-radiological releases of chemicals of concern
- Provides reasonable estimates for the likelihood and consequences of each accident identified
- Applies acceptable methods to estimate potential impacts of accidental releases.

The ISA also:

- Identifies adequate engineering and/or administrative controls (IROFS) for each accident sequence of significance
- Satisfies principles of the baseline design criteria and performance requirements in 10 CFR 70.61 (CFR, 2008b) by applying defense-in-depth to high risk chemical release scenarios
- Assures adequate levels of these controls are provided so those items relied on for safety (IROFS) will satisfactorily perform their safety functions.

The ISA demonstrates that the facility and its operations have adequate engineering and/or administrative controls in place to prevent or mitigate high and intermediate consequences from the accident sequences identified and analyzed.

6.3.2 Consequence Analysis Methodology

This section describes the methodology used to determine chemical exposure/dose and radiochemical exposure/dose criteria used to evaluate potential impact to the workers and the public in the event of material release. This section limits itself to the potential effects associated with accidental release conditions. Potential impacts from chronic (e.g., long-term) discharges from the facility are detailed in the Environmental Report.

6.3.2.1 Defining Consequence Severity Categories

The accident sequences identified by the ISA need to be categorized into one of three consequence categories (high, intermediate, or low) based on their forecast radiological, chemical, and/or environmental impacts. Section 6.1.1, Chemical Screening and Classification, presented the radiological and chemical consequence severity limits defined by 10 CFR 70.61 (CFR, 2008b) for the high and intermediate consequence categories.

To quantify criteria of 10 CFR 70.61 (CFR, 2008b) for chemical exposure, standards for each applicable hazardous chemical must be applied to determine exposure that could: (a) endanger the life of a worker; (b) lead to irreversible or other serious long-lasting health effects to an individual; and (c) cause mild transient health effects to an individual. Per NUREG-1520 (NRC 2002), acceptable exposure standards include the Emergency Response Planning Guidelines (ERPG) established by the American Industrial Hygiene Association and the Acute Exposure Guideline Levels (AEGL) established by the National Advisory Committee for Acute Guideline Levels for Hazardous Substances. The definitions of various ERPG and AEGL levels are contained in Table 6.3-1, ERPG and AEGL Level Definitions.

The exposure severity limits of 10 CFR 70.61 (CFR, 2008b) have been summarized and the values selected for numerical criteria development are presented in Table 6.3-2, Licensed material Exposure Severity Categories. The severity limits defined in this table come from regulation or known reference criteria. Numerical values for applying these severity categories were developed as defined below.

The toxicity of UF_6 is due to its two hydrolysis products, hydrogen fluoride (HF) and uranyl fluoride (UO_2F_2). The toxicological effects of UF_6 as well as these byproducts were previously described in Section 6.1.2. The NEF SAR indicates AEGL and NUREG-1391 (NRC, 1991) values for HF and UF_6 were utilized for evaluation of chemotoxic exposure. At EREF, the AEGL values for HF and UF_6 were utilized for evaluation of chemotoxic exposure. Additionally, since UO_2F_2 is a soluble uranium compound, the values presented in NUREG-1391 (NRC, 1991) were utilized for evaluating soluble uranium (U) exposure in terms of both chemical toxicity and radiological dose. In general, the chemotoxicity of uranium inhalation/ingestions is of more significance than radiation dose resulting from internal U exposure. The ERPG and AEGL values for HF are presented in Table 6.3-3, ERPG and AEGL values for Hydrogen Fluoride. The ERPG and AEGL values for UF_6 are presented in Table 6.3-4, ERPG and AEGL values for Uranium Hexafluoride. The values from NUREG-1391 (NRC, 1991) for soluble uranium are presented in Table 6.3-5, Health Effects from Intake of Soluble Uranium. The values from Table 6.3-5 were selected for evaluating the severity of public (individuals outside the controlled area boundary) exposure to soluble uranium. The methodology calculates the total intake of U without crediting any reduction in uptake that would occur through exhalation and compares this conservative intake against the NUREG-1391 body-burden limit (the amount of uranium that stays in the body). The high consequence limit selected is a 21 mg body burden which represents an exposure threshold causing irreversible or other long-lasting health effects. It is more conservative than the 30 mg intake limit given in 10 CFR 70.61 (2008b). The intermediate consequence limit selected is a 4.06 mg body burden which represents an exposure threshold for transient renal injury or effect.

The uranium intake limits from NUREG-1391 (NRC, 1991) are not applied for worker cases because the worker is more conservatively protected by the UF_6 AEGL limits reflected in Table 6.3-6. At a standard respiration rate, the amount of uranium intake that would occur at AEGL limits is lower than NUREG-1391 values.

Table 6.3-6, Definition of Consequence Severity Categories, summarizes the values used to define consequence severities considering both HF and UF_6 exposures as derived from the AEGL and NUREG-1391 (NRC, 1991) values. The assumptions associated with the application of these values are listed below.

6.3.2.1.1 Worker Exposure Assumptions

Individual accidents are hypothesized as a release of UF_6 into the room of concern over a period of time while a worker is present. The UF_6 is assumed to instantaneously mix in the room free volume, with no leakage producing a constantly increasing concentration until the release stops. The consequence to the worker is computed two ways: with the UF_6 unchanged in chemical form; and with UF_6 completely reacted with the humidity in the air to form HF and UO_2F_2. The exposure is evaluated for: radiation dose via inhalation of uranium in the form of soluble UO_2F_2; chemical toxicity from the inhaled uranium or UF_6; and chemical toxicity from the inhaled HF. The worker exposure duration is independent of the release duration, and the consequences are computed on the time-averaged concentration.

Any release from UF_6 systems/cylinders at the facility would predominantly consist of HF with some potential entrainment of UO_2F_2 particulate. An HF release would cause a visible cloud

and a pungent odor. The odor threshold for HF is less than 1 ppm and the irritating effects of HF are intolerable at concentrations well below those that could cause permanent injury or which produce escape-impairing symptoms. Employees are trained in proper actions to take in response to a release and it can be confidently predicted that workers will take immediate self-protective action to escape a release area upon detecting any significant HF odor. Accordingly, ten-minute AEGL values were used to evaluate worker exposure durations which are 10 minutes or less. These values are conservative compared to initial NEF values. Actual releases would be detected by the worker(s) who can reliably evacuate all areas of concern within the evaluated exposure durations.

Another assumption made in conducting consequence severity analysis is that for releases precipitated by a fire event, only public exposure was considered in determining consequence severity; worker exposures were not considered. The worker is assumed to evacuate the area of concern once the fire is detected by the worker. Fires of sufficient magnitude to cause chemical/radiological release must be of a severity to either have caused failure of a mechanical system/component or involve substantive combustibles containing uranic content. In either case, the space would be untenable for unprotected workers. Sufficient time is available for the worker to reliably detect and evacuate the area of concern prior to release. Fire brigade/fire department members responding to emergencies are required by emergency response procedure (and regulation) to have suitable respiratory and personal protective equipment.

6.3.2.1.2 Public Exposure Assumptions

Potential exposures to members of the public were also evaluated using conservative assumptions for both exposure concentrations and durations. Exposure was evaluated for consequence severity against chemotoxic, radiotoxic, and radiological dose.

Individual accidents are postulated in the same manner as described for the worker case – a release of UF_6 into the room of concern over a period of time with water vapor mixing to form UO_2F_2 and HF. These chemicals escape from the room through the ventilation system and are carried via atmospheric dispersion to the controlled area boundary where exposure to both HF and UO_2F_2 is assumed. UF_6 is assumed to have completely reacted with humidity in the air by the time the material reaches the controlled area boundary, so the UF_6 AEGL values are not applied for the individual at the boundary. The methodology assumes immediate exposure (does not account for the time of chemical transport to the boundary) and the exposure duration to the individual at the controlled area boundary is independent of the release duration. The consequence to the individual at the controlled area boundary is evaluated against: radiation dose via inhalation of uranium in the form of soluble uranyl fluoride; chemical toxicity from the inhaled uranium; and chemical toxicity from the inhaled hydrogen fluoride. The consequences are calculated based on the average concentration over the duration of public exposure which is assumed to be 30 minutes. This is consistent with self-protective criteria for UF_6/HF plumes listed in NUREG-1140 (NRC, 1988).

6.3.2.1.3 Environmental Exposure Assumptions

10 CFR 70.61 (CFR, 2008b) also requires a limit on the amount of material release to the environment irrespective if such a release results in exposure to an individual. The limit is defined as a 24-hour averaged release of radioactive material outside the restricted area in concentrations exceeding 5000 times the values in Table 2 of Appendix B to 10 CFR 20 (CFR, 2008e). This value is only influenced by the amount of uranyl fluoride released (HF is not radioactive) and is further dependent on the enrichment level of the released material. The methodology developed a correlation to airborne concentrations of U at a given enrichment

level. At 6% enrichment, the maximum allowable U concentration value for a 24 hour average concentration is 5.47 mg/m3.

6.3.2.2 Chemical Release Scenarios

The EREF ISA Summary presents the evaluation level chemical release scenarios based on the criteria applied in the ISA. Information on the criteria for the development of these scenarios is also provided in the EREF ISA Summary.

6.3.2.3 Source Term

The methodologies used to determine source term are those prescribed in NUREG/CR-6410 (NRC, 1998) and supporting documents.

6.3.2.3.1 Dispersion Methodology

In estimating the dispersion of chemical releases from the facility, conservative dispersion methodologies were utilized. Site boundary atmospheric dispersion factors were generated using a computer code based on Regulatory Guide 1.145 (NRC, 1982) methodology. The code was executed using five years (2003-2007) of meteorological data collected at Argonne National Lab-West (EBR) which is now identified as MFC (Materials and Fuels Complex), a mesonet station on the Idaho National Laboratory (INL) property that is located 18 kilometers (11 miles) west of the EREF site. This station was judged to be representative of the EREF site because both are located in the Eastern Snake River Plain and have similar climates and topography.

The specific modeling methods utilized follow consistent and conservative methods for source term determination, release fraction, dispersion factors, and meteorological conditions as prescribed in NRC Regulatory Guide 1.145 (NRC, 1982).

For releases inside of buildings, conservative leak path fractions were assumed as recommended by NUREG/CR-6410 (NRC, 1998) and ventilation on and off cases were evaluated for consideration of volumetric dilution and mixing efficiency prior to release to atmosphere.

6.3.2.4 Chemical Hazard Evaluation

This section is focused on presenting potential deleterious effects that might occur as a result of chemical release from the facility. As required by 10 CFR 70 (CFR, 2008a), the likelihood of these accidental releases fall into either unlikely or highly unlikely categories.

6.3.2.4.1 Potential Effects to Workers/Public

The toxicological properties of potential chemicals of concern were detailed in Section 6.2, Chemical Process Information. The EREF ISA Summary presents the evaluation level accident scenarios identified in the Integrated Safety Analysis and presents the potential consequence severities to facility workers or members of the public.

All postulated incidents have been determined to present low consequences to the workers/public, or where determined to have the potential for intermediate or high consequences, are protected with IROFS to values less than the likelihood thresholds required by 10 CFR 70.61 (CFR, 2008b).

6.3.2.4.2 Potential Effects to Facility

All postulated incidents have been determined to present inherently low consequences to the facility. No individual incident scenarios were identified that propagate additional consequence to the facility process systems or process equipment. The impact of external events on the facility, and their ability to impact process systems or equipment of concern is discussed in the EREF ISA Summary.

6.4 CHEMICAL SAFETY ASSURANCE

The facility will be designed, constructed, and operated such that injurious chemical release events are prevented. Chemical process safety at the facility is assured by designing the structures, systems and components with safety margins such that safe conditions are maintained under normal and abnormal process conditions and during any credible accident or external event.

6.4.1 Management Structure and Concepts

The criteria used for chemical process safety encompasses principles stated in NUREG-1601, Chemical Process Safety at Fuel Cycle Facilities (NRC, 1997). It is also supported by concepts advocated in 29 CFR 1910.119, Process Safety Management of Highly Hazardous Chemicals (CFR, 2008f), and 40 CFR, 68, Accidental Release Prevention Requirements (CFR, 2008g), although it is noted here that there are no chemicals at this facility which exceed threshold planning quantities of either standard.

The intent of chemical safety management principles is to identify, evaluate, and control the risk of chemical release through engineered, administrative, and related safeguards.

The chemical safety philosophy for the facility is to apply sufficient control to identify, evaluate, and control the risk of accidental chemical releases associated with licensed material production to acceptable levels in accordance with 10 CFR 70.61(b) and (c) (CFR, 2008b).

The identification and evaluation of chemical release risk has been developed through the conduct of an ISA. The development of these scenarios, and the dispersion analysis and chemical/radiological dose assessment associated with each accident sequence was performed and was conducted in accordance with NUREG/CR-6410, Nuclear Fuel Cycle Facility Accident Analysis Handbook (NRC, 1998) as was described previously in Section 6.3, Chemical Hazards Analysis.

The control of chemical release risk is ensured through numerous features that are described in the following sections.

6.4.2 System Design

The design of chemical process systems includes numerous controls for maintaining safe conditions during process operations. This is accomplished through several means including managing the arrangement and size of material containers and processes, selection and use of materials compatible with process chemicals, providing inherently safer operating conditions (e.g., vacuum handling), providing process interlocks, controls, and alarming within the chemical processes. All of these plant and equipment features help assure prevention of chemical release. Process piping and components, (e.g., centrifuges, traps, vents, etc.) are maintained safe by limits placed on their operating parameters.

With respect to chemical process safety design features recommended in NUREG-1601 (NRC, 1997), this section briefly details the features provided for the UF_6 system which is the only chemical of concern (Class 1) process system.

6.4.2.1 Physical Barriers

Double-Walled Piping and Tanks - The UF_6 system piping operates at subatmospheric pressure throughout the plant except for the liquid sampling operation which is conducted within a

secondary containment autoclave. As such, UF_6 system piping is not double-walled. Criticality design has been addressed for this vessel.

Liquid Confinement Dikes – Dikes are provided in areas where uranic material is present in solution in tankage. Criticality design constraints were applied to these containment areas. Confinement dikes are also present for chemical spillage control in TSB areas.

Glove Boxes – Glove boxes are utilized for a small number of decontamination operations (e.g., sample bottles, flex hoses). They are not needed for other operations as the levels of specific activity are low. To confine potential HF/uranic material effluent, flexible exhaust hoses connected to the GEVS are provided for locations where UF_6 systems will be opened (e.g., hose connect/disconnect, maintenance, etc.) to capture any fumes remaining after purging operations. GEVS flexible exhaust hoses and fume hoods are present in the TSB where uranic material containers are opened during laboratory and waste handling operations.

Splash Shields – There are no areas where bulk liquid hazardous chemicals will be handled. Lab operations with hazardous chemicals will be conducted in hoods and/or with appropriate personnel protective equipment for these small-scale operations.

Fire Walls – Fire walls are provided to separate UF_6 and uranic material handling areas from other areas of the facility.

Protective Cages – Protective barriers are provided to protect UF_6 system susceptible components (e.g., piping, small equipment) in areas where there is major traffic.

Backflow Preventers and Siphon Breaks – Liquid systems with high uranic content (i.e., not trace waste streams) are provided with means to prevent backflow or siphon. For the UF_6 gaseous piping, design features are provided to prevent UF_6 migration into the few systems which are required to be interconnected to UF_6.

Overflow vessel – UF_6 is not handled in liquid form in any continuous process and any batch handling is performed in small lab quantities or in a secondary containment autoclave. For those systems where uranic material is in solution, overflow protection features are provided.

Chemical Traps and Filters - Chemical traps and filters are provided on vent and ventilation systems which capture UF_6 to remove HF and uranic contaminants prior to any discharge to atmosphere.

6.4.2.2 Mitigative Features

Driving Force Controls – Driving force controls are provided to isolate heating/cooling equipment at UF_6 take-off stations and cold traps as well as other uranic material containing systems. Other driving force controls include relief valves and cut-offs on the nitrogen system to protect the UF_6 system from overpressure.

Solenoid and Control Valves – These types of valves are provided to stop and/or regulate the flow of UF_6 in the event of abnormal operating conditions.

Spray Systems – Spray systems are not provided for vapor mitigation of UF_6 systems or system areas due to criticality control requirements. Fire sprinkler systems are provided in select process areas as described in SAR Section 7.5.1.4.

Alarm Systems – Alarm systems are provided which will alarm in the Control Room for abnormal process parameter (e.g., flow, temperature, pressure, level, etc.) conditions in the UF_6 system and some supporting systems. Leak detection is also provided to detect the release of UF_6/HF in the facility GEVS systems and other ventilation systems. Alarm measures are in

place to notify facility employees of the need to evacuate process areas and/or the facility in the event of a serious chemical release.

6.4.2.3 Baseline Design Criteria and Defense in Depth

The ISA demonstrates that the design and construction complies with the baseline design criteria (BDC) of 10 CFR 70.64(a) (CFR, 2008d) and the defense-in-depth requirements of 10 CFR 70.64(b) (CFR, 2008d). The design provides for adequate protection against chemical risks produced from licensed material, facility conditions which affect the safety of licensed material, and hazardous chemicals produced from licensed material. The EREF is not proposing any facility-specific or process-specific relaxations or additions to applicable BDC features.

6.4.3 Configuration Management

Configuration management includes those controls which ensure that the facility design basis is thoroughly documented and maintained, and that changes to the design basis are controlled. This includes the following:

A. That management commitment and staffing is appropriate to ensure configuration management is maintained

B. That proper quality assurance (QA) is in place for design control, document control, and records management

C. That all structures, systems, and components, including IROFS, are under appropriate configuration management.

A more detailed description of the configuration management system can be found in Section 11.1, Configuration Management (CM).

6.4.4 Maintenance

The EREF helps maintain chemical process safety through the implementation of administrative controls that ensure that process system integrity is maintained and that IROFS and other engineered controls are available and operate reliably. These controls include planned and scheduled maintenance of equipment and controls so that design features will function when required. Appropriate plant management is responsible for ensuring the operational readiness of IROFS under this control. For this reason, the maintenance function is closely coupled to operations. The maintenance function plans, schedules, tracks, and maintains records for maintenance activities.

Maintenance activities generally fall into the following categories:

A. Surveillance/monitoring

B. Corrective maintenance

C. Preventive maintenance

D. Functional testing.

A more detailed description of the maintenance program and maintenance management system can be found in Section 11.2, Maintenance.

6.4.5 Training

Training in chemical process safety is provided to individuals who handle licensed materials and other chemicals at the facility. The training program is developed and implemented with input from the chemical safety staff, training staff, and management. The program includes the following:

A. Analysis of jobs and tasks to determine what a worker must know to perform tasks efficiently

B. Design and development of learning objectives based upon the analysis of jobs and tasks that reflect the knowledge, skills, and abilities needed by the worker

C. Design and development of qualification requirements for positions where a level of technical capability must be achieved and demonstrated for safe and reliable performance of the job function

D. Development and implementation of standard and temporary operating procedures

E. Development and implementation of proper inspection, test, and maintenance programs and procedures

F. Development of chemical safety awareness throughout the facility so that all individuals know what their roles and responsibilities are in coordinating chemical release mitigation activities - in support of the Emergency Plan - in the event of a severe chemical release

G. Coordination of chemical process safety training curriculum with that of other areas including, radiological safety, criticality safety, facility operations, emergency response, and related areas.

A more detailed description of the training program can be found in Section 11.3, Training and Qualifications.

6.4.6 Procedures

A key element of chemical process safety is the development and implementation of procedures that help ensure reliable and safe operation of chemical process systems.

Generally, four types of plant procedures are used to control activities: operating procedures, administrative procedures, maintenance procedures, and emergency procedures.

Operating procedures, developed for workstation and Control Room operators, are used to directly control process operations. Operating procedures include:

- Directions for normal operations, including startup and some testing, operation, and shutdown, as well as off-normal conditions of operation, including alarm response
- Required actions to ensure radiological and nuclear criticality safety, chemical safety, fire protection, emergency planning, and environmental protection
- Operating limits, controls and specific direction regarding administrative controls to ensure operational safety
- Safety checkpoints such as hold points for radiological or criticality safety checks, QA verifications, or operator independent verification.

Administrative procedures are used to perform activities that support the process operations, including, but not limited to, management measures such as the following:

- Configuration management
- Nuclear criticality, radiation, chemical, and fire safety
- Quality assurance
- Design control
- Plant personnel training and qualification
- Audits and assessments
- Incident investigations
- Record keeping and document control
- Reporting.

Administrative procedures are also used for:

- Implementing the Fundamental Nuclear Material Control (FNMC) Plan
- Implementing the Emergency Plan
- Implementing the Physical Security Plan
- Implementing the Standard Practice Procedures Plan for the Protection of Classified Matter.

Maintenance procedures address:

- Preventive and corrective maintenance of IROFS
- Surveillance (includes calibration, inspection, and other surveillance testing)
- Functional testing of IROFS
- Requirements for pre-maintenance activity involving reviews of the work to be performed and reviews of procedures.

Emergency procedures address the preplanned actions of operators and other plant personnel in the event of an emergency.

A more detailed description of the procedural development and management program can be found in Section 11.4, Procedures Development and Implementation.

6.4.7 Chemical Safety Audits

Audits are conducted to determine that plant operations are performed in compliance with regulatory requirements, license conditions, and written procedures. As a minimum, they assess activities related to radiation protection, criticality safety control, hazardous chemical safety, fire protection, and environmental protection.

Audits are performed in accordance with a written plan, which identifies and schedules audits to be performed. Audit team members shall not have direct responsibility for the function and area being audited. Team members have technical expertise or experience in the area being audited and are indoctrinated in audit techniques. Audits are conducted on an annual basis on select functions and areas as defined above. The chemical process safety functions and areas will be audited at least triennially.

Qualified staff personnel that are not directly responsible for production activities are utilized to perform routine surveillances/assessments. Deficiencies noted during the inspection requiring

corrective action are forwarded to the manager of the applicable area or function for action. Future surveillances/assessments include a review to evaluate if corrective actions have been effective.

A more detailed description of the audit program can be found in Section 11.5, Audits and Assessments.

6.4.8 Emergency Planning

The EREF has a facility emergency plan and program which includes response to mitigate the potential impact of any process chemical release including requirements for notification and reporting of accidental chemical releases.

The EREF fire brigade/emergency response team is outfitted, equipped, and trained to provide hazardous material response and mitigation commensurate with the requirements of 29 CFR 1910.120, Hazardous waste operations and emergency response (CFR, 2008i) for single initial entry. This includes a technician level qualified entry and backup team, and an incident commander/safety officer. Based on the subatmospheric nature of the plant processes and the ability to isolate most process systems remotely, EREF intends to allow a single entry team (2 members) to perform simple response actions (e.g., drift pinning small leaks, closing a manual valve, or similar) or for purposes of rescuing a worker(s) rendered unconscious from HF exposure. This allows a dedicated backup team for rapid intervention. For purposes of compliance with OSHA, EREF will rely on offsite response agencies to provide medical response support beyond administering oxygen and HF exposure treatment. The offsite response will arrive in a timeframe that will ensure responder safety if entry is required. If an event requires more than one entrant team, EREF will await offsite responders. The safety officer has the additional responsibility to monitor response activities to ensure that moderator concerns are appropriately considered for criticality safety.

The City of Idaho Falls, ID Fire Department (IFFD) is the nearest offsite response agency who can supplement EREF with additional Hazardous Waste Operations and Emergency Response (HAZWOPER) response teams. A baseline needs assessment regarding offsite response determined the IFFD has the needed equipment and training to provide multiple HAZWOPER compliant response teams.

Additional information on emergency response can be found in SAR Section 7.5.2, Fire Emergency Response, and in the EREF Emergency Plan.

6.4.9 Incident Investigation and Corrective Actions

A facility wide incident investigation process exists that includes chemical process related incidents. This process is available for use by any person at the facility for reporting abnormal events and potentially unsafe conditions or activities. Abnormal events that potentially threaten or lessen the effectiveness of health, safety or environmental protection will be identified and reported to and investigated by the Environmental Health, Safety & Licensing Manager. Each event will be considered in terms of its requirements for reporting in accordance with regulations and will be evaluated to determine the level of investigation required. These evaluations and investigations will be conducted in accordance with approved procedures. The depth of the investigation will depend upon the severity of the classified incident in terms of the levels of uranium/chemical released and/or the degree of potential for exposure of workers, the public, or the environment.

A more detailed description of the incident investigation program can be found in Section 11.6, Incident Investigations and Corrective Action Process.

6.5 REFERENCES

ANSI, applicable version. Uranium Hexafluoride – Packing for Transport, American National Standards Institute, ANSI N14.1, version in effect at time of cylinder manufacture.

CFR, 2008a. Title 10, Code of Federal Regulations, Part 70, Domestic Licensing of Special Nuclear Material, 2008.

CFR, 2008b. Title 10, Code of Federal Regulations, Section 70.61, Performance requirements, 2008.

CFR, 2008c. Title 10, Code of Federal Regulations, Section 70.62, Safety program and integrated safety analysis, 2008.

CFR, 2008d. Title 10, Code of Federal Regulations, Section 70.64, Requirements for new facilities or new processes at existing facilities, 2008.

CFR, 2008e. Title 10, Code of Federal Regulations, Part 20 Appendix B, Annual Limit on Intake (ALIs) and Derived Air Concentrations (DACs) of Radionuclides for Occupational Exposure; Effluent Concentrations; Concentrations for Release to Sewerage, 2008.

CFR, 2008f. Title 29, Code of Federal Regulations, Section 1910.119, Process safety management of highly hazardous chemicals, 2008.

CFR, 2008g. Title 40, Code of Federal Regulations, Part 68, Accidental Release Prevention Requirements, 2008.

CFR, 2008h. Title 29, Code of Federal Regulations, Part 1910, Occupational Safety and Health Standards, 2008.

CFR, 2008i. Title 29, Code of Federal Regulations, Section 1910.120, Hazardous waste operations and emergency response, 2008.

CFR, 2008j. Title 10, Code of Federal Regulations, Part 30, Rules Of General Applicability To Domestic Licensing Of Byproduct Material, 2008.

CFR, 2008k. Title 10, Code of Federal Regulations, Part 40, Domestic Licensing of Source Material, 2008.

DOE, 1988. Monitoring of Corrosion in ORGDP Cylinder Yards, presented at DOE Conference – Uranium Hexafluoride - Safe Handling, Processing, and Transporting, Henson, H.M., et al, 1988.

ICC, 2006, International Code Council, International Fire Code, 2006.

LES, 1993. Claiborne Enrichment Center Safety Analysis Report, Chapter 6, Louisiana Energy Services, December 1993.

LES, 2003. National Enrichment Facility Safety Analysis Report, Chapter 6, Louisiana Energy Services, December 2003.

NRC, 1982. Atmospheric Dispersion Models for Potential Accident Consequence Assessments at Nuclear Power Plants, Regulatory Guide 1.145, Revision 1, U.S. Nuclear Regulatory Commission, November 1982. (Reissued February 1983 to correct page 1.145-7)

NRC, 1988. A Regulatory Analysis on Emergency Preparedness for Fuel Cycle and Other Radioactive Material Licensees, NUREG-1140, U.S. Nuclear Regulatory Commission, January 1988.

NRC, 1991. Chemical Toxicity of Uranium Hexafluoride Compared to Acute Effects of Radiation, NUREG-1391, U.S. Nuclear Regulatory Commission, February 1991.

NRC, 1997. Chemical Process Safety at Fuel Cycle Facilities, NUREG-1601, U.S. Nuclear Regulatory Commission, August 1997.

NRC, 1998. Nuclear Fuel Cycle Facility Accident Analysis Handbook, NUREG/CR-6410, U.S. Nuclear Regulatory Commission, March 1998.

NRC, 2002. Standard Review Plan for the Review of a License Application for A Fuel Cycle Facility, NUREG-1520, U.S. Nuclear Regulatory Commission, March 2002.

NRC, 2005. Safety Evaluation Report, for the National Enrichment Facility in Lea County, New Mexico, NUREG-1827, U.S. Nuclear Regulatory Commission, June 2005

ORNL, 2001. Prediction of External Corrosion for Steel Cylinders – 2001 Report, ORNL/TM-2001/164, Oak Ridge National Laboratory, Schmoyer and Lyon, September, 2001.

TABLES

Table 6.1-1 Chemical Hazard Classification [Note 1]
(Page 1 of 2)

Chemical	EREF Class	Formula	Phase(s) Note 2	Radioactive	Toxic	Corrosive	Water Reactive	Flammable	Combustible	Oxidizer	Other	Comments
uranium hexafluoride [Note 3]	1	UF_6	S/L/G	•	•	•	•					
uranic compounds	NA	UO_2F_2, UF_4, U_3O_8,	S/L	•	•	•	•					UF_6 reaction byproducts, deposits & in solution
hydrogen fluoride	NA	HF	G		•	•	•					UF_6 reaction byproduct
sodium fluoride	2	NaF	S		•							granules
aluminum oxide (activated)	2	Al_2O_3	S								•	irritant, powder / granules
carbon (activated)	2	C	S						•			powder / granules
paper, polymers	3		S						•			ventilation filter media, anti-contamination clothing, ion exchange resin, etc.
potassium hydroxide	3	KOH	S		•	•						
phosphate	3		S								•	surfactant, irritant, P-3 Plastoclin 4100 B
scrap metals	3		S	•								contaminated scrap/parts
citric acid	2	$C_6H_8O_4$	S/L			•						crystals & solution (5-10%)
sodium hydroxide	3	NaOH	S/L		•	•						powder & solution (0.1N)
hydrocarbon oils / greases	3	varies	S/L						•			
hydrocarbon sludges	3	varies	S/L						•			
perfluoropolyether fluids	2	varies	L								•	irritant, long chain perfluorocarbons
methylene chloride	3	CH_2Cl_2	L								•	Health hazard
polydimethylsiloxane (silicone oil)	2	varies	L						•			
hydrocarbon / polar solvents and liquids	3	varies	L					•				ethanol, acetone, toluene, petroleum ether, paint, cutting oils
nitric acid	3	HNO_3	L			•						(50-70%) weight concentration
hydrofluoric acid	3	HF (H_2O)	L			•						38% weight concentration
hydrogen peroxide	3	H_2O_2	L							•		
sulfuric acid	3	H_2SO_4	L			•						
phosphoric acid	3	H_3PO_4	L			•						(10-25%) weight concentration

Table 6.1-1 Chemical Hazard Classification [Note 1]
(Page 2 of 2)

Chemical	EREF Class	Formula	Phase(s) Note 2	Radioactive	Toxic	Corrosive	Water Reactive	Flammable	Combustible	Oxidizer	Other	Comments
diesel fuel	3	varies	L						•			generator / vehicle fuel
deionized water	3	H_2O	L			•						
hydrofluorocarbons	3	varies	L/G								•	refrigerant, irritant
nitrogen	2	N_2	L/G								•	asphyxiant, test gas / purge gas
propane	3	C_3H_8	L/G					•				test gas
hydrogen	3	H_2	G					•				test gas
acetylene	3	C_2H_2	G					•				welding gas
oxygen	3	O_2	G							•		test gas / welding gas
argon	3	Ar	G								•	asphyxiant, test gas / welding gas
helium	3	He	G								•	asphyxiant, test gas

Notes:

1: Hazardous material classifications per the International Fire Code (IFC). Radioactive classification has also been included although not identified as a specific IFC classification.

2: Lists the phases applicable based on facility use of chemical; S – solid, L – liquid, G – gas/vapor.

3: Solid UF_6 cylinders also have ullage space containing vapor UF_6 and traces of HF, air, non-condensables and U non-volatiles (<1% total wt)

Table 6.1-2 Chemical Inventory – Separations Building Module (SBM)[Note 1] and Blending, Sampling and Preparation Building (BSPB), contains Security-Related Information Withheld Under 10 CFR 2.390

Table 6.1-3 Chemical Inventory – Centrifuge Assembly Building, contains Security-Related Information Withheld Under 10 CFR 2.390

Table 6.1-4 Chemical Inventory – Technical Support Building (TSB) and Operation Support Building (OSB), contains Security-Related Information Withheld Under 10 CFR 2.390

Table 6.1-5 Chemical Inventory – Mechanical Services Building (MSB) and Electrical Services Building (ESB), contains Security-Related Information Withheld Under 10 CFR 2.390

Table 6.1-6 Chemical Inventory – Exterior Areas, contains Security-Related Information Withheld Under 10 CFR 2.390

Table 6.1-7 Physical Properties of UF_6
(Page 1 of 1)

Property	Value
Sublimation Point at 1.01 bar abs (14.7 psia)	56.6°C (133.8°F)
Triple Point	1.52 bar abs (22 psia) 64.1°C (147.3°F)
Density	
Solid @ 20°C (68°F)	5.1 g/cc (317.8 lb/ft^3)
Liquid @ 64.1°C (147.3°F)	3.6 g/cc (227.7 lb/ft^3)
Liquid @ 93°C (200°F)	3.5 g/cc (215.6 lb/ft^3)
Liquid @ 113°C (235°F)	3.3 g/cc (207.1 lb/ft^3)
Liquid @ 121°C (250°F)	3.3 g/cc (203.3 lb/ft^3)
Heat of Sublimation @ 64.1°C (147.3°F)	135,373 J/kg (58.2 BTU/lb)
Heat of Fusion @ 64.1°C (147.3°F)	54,661 J/kg (23.5 BTU/lb)
Heat of Vaporization @ 64.1°C (147.3°F)	81,643 J/kg (35.1 BTU/lb)
Specific Heat	
Solid @ 27°C (81°F)	477 J/kg/°K (0.114 BTU/lb/°F)
Liquid @ 72°C (162°F)	544 J/kg/°K (0.130 BTU/lb/°F)
Critical Pressure	46.10 bar abs (668.8 psia)
Critical Temperature	230.2°C (446.4°F)

Table 6.2-1 Properties of Chemical Adsorbents
(Page 1 of 1)

Adsorbent (solid)/ Adsorbate (gas)	Heat of Adsorption	Capacity of Adsorption by weight
Activated Carbon/UF_6	293 kJ/kg (126 BTU/lb)	1:1
Activated Carbon/HF	negligible	negligible at low pressure
Aluminum Oxide/UF_6	negligible	0.2:1
Aluminum Oxide/HF	negligible	0.2:1
Activated NaF/UF_6	186 kJ/kg (80 BTU/lb)	1.0-1.5:1
Activated NaF/HF	4,052 kJ/kg (1,742 BTU/lb)	1:0.5

Table 6.2-2 UF_6 Corrosion Rates
(Page 1 of 1)

Material	Corrosion Rate @ 20°C (68°F) per year	Corrosion Rate @ 100°C (212°F) per year
Aluminum	6.6E-7 mm (2.6E-5 mils)	8.4E-5 mm (3.3E-3 mils)
Stainless Steel	1.4E-4 mm (5.5E-3 mils)	0.03 mm (1.2 mils)
Copper	1.2E-4 mm (4.7E-3 mils)	3.3E-3 mm (1.3E-1 mils)
Nickel	< 0.05 mm (< 2.0 mils)	< 0.05 mm (< 2.0 mils)

Table 6.2-3 Materials of Construction for UF_6 Systems
(Page 1 of 1)

Component	Material	Wall Thickness (nominal)	Wall Thickness (minimum)
UF_6 Feed and Tail Cylinders UF_6 Product Storage (Onsite Use Only) (48Y)	Carbon Steel ASTM A516	16 mm (0.625 inch)	12.7 mm (0.5 inch)
UF_6 Product Cylinder (30B)	Carbon Steel ASTM A516	12.7 mm (0.5 inch)	8 mm (0.3125 inch)
Sample Bottle (1S)	Nickel/Monel ASTM B162	1.6 mm (0.0625 inch)	1.6 mm (0.0625 inch)
UF_6 Piping	Aluminum & Stainless Steel	3.7 mm (0.147 inch)	not applicable
UF_6 Valves	Aluminum & Stainless Steel	> 3.7 mm (> 0.147 inch)	not applicable
Cold Trap	Stainless Steel	8 mm (0.315 inch)	not applicable

Table 6.3-1 ERPG and AEGL Level Definitions
(Page 1 of 1)

Emergency Response Planning Guideline (ERPG)		Acute Exposure Guideline Level (AEGL)	
General Definition	Values intended to provide estimates of concentration ranges above which one could be responsibly anticipate observing health effects.	**General Definition**	Threshold exposure limits for the protection of the general public, which are applicable to emergency exposure periods ranging from 10 minutes to 8 hours. It is believed that the recommended exposure levels are applicable to general population including infants and children, and other individuals who may be sensitive and susceptible.
ERPG-1	The maximum airborne concentration below which it is believed nearly all individuals could be exposed for up to 1 hour without experiencing more than mild, transient adverse health effects or without perceiving a clearly defined objectionable odor.	**AEGL-1** (non-disabling)	The airborne concentration of a substance above which it is predicted that the general population, including susceptible individuals, could experience notable discomfort, irritation or certain asymptomatic, non-sensory effects. However, the effects are not disabling and are transient and reversible upon cessation of exposure.
ERPG-2	The maximum airborne concentration below which it is believed nearly all individuals could be exposed for up to 1 hour without experiencing or developing irreversible or other serious health effects or symptoms that could impair an individual's ability to take protective action.	**AEGL-2** (disabling)	The airborne concentration of a substance above which it is predicted that the general population, including susceptible individuals, could experience irreversible or other serious, long-lasting adverse health effects, or an impaired ability to escape.
ERPG-3	The maximum airborne concentration below which it is believed nearly all individuals could be exposed for up to 1 hour without experiencing or developing life-threatening health effects.	**AEGL-3** (lethality)	The airborne concentration of a substance above which it is predicted that the general population, including susceptible individuals, could experience life-threatening health effects or death.

Table 6.3-2 Licensed Material Exposure Severity Categories
(Page 1 of 1)

Severity of Consequence	Receptor		
	Worker	**Offsite Public**	**Environment**
Category 3 High Consequence	Radiation Dose: >1 Sievert (100 rem) Chemical Dose: >AEGL-3 for UF_6 >AEGL-3 for HF	Radiation Dose: >0.25 Sievert (25 rem) Chemical Dose: >NUREG 1391 for permanent renal damage >AEGL-2 for HF	No values specified.
Category 2 Intermediate Consequence	Radiation Dose: >0.25 Sievert (25 rem) Chemical Dose: >AEGL-2 for UF_6 >AEGL-2 for HF	Radiation Dose: >0.05 Sievert (5 rem) Chemical Dose: >NUREG 1391 for transient renal injury >AEGL-1 for HF	Radioactive release >5000 times the values in 10 CFR Part 20, Appendix B, Table 2 (24 hour averaged)
Category 3 Low Consequence	Accidents with lower radiological and chemical exposures than those listed above.	Accidents with lower radiological and chemical exposures than those listed above.	Lesser radioactive release than listed above.

Table 6.3-3 ERPG and AEGL Values for Hydrogen Fluoride
(Page 1 of 1)

(Values in mg HF/m^3)

ERPG		AEGL					
	1-hr		10-min	30-min	1-hr	4-hr	8-hr
ERPG-1	1.6	AEGL-1	0.8	0.8	0.8	0.8	0.8
ERPG-2	16.4	AEGL-2	78	28	20	9.8	9.8
ERPG-3	41	AEGL-3	139	51	36	18	18

Table 6.3-4 ERPG and AEGL values for Uranium Hexafluoride
(Page 1 of 1)

Values in mg UF_6/m^3

ERPG		AEGL					
	1-hr		10-min	30-min	1-hr	4-hr	8-hr
ERPG-1	5	AEGL-1	3.6	3.6	3.6	NR	NR
ERPG-2	15	AEGL-2	28	19	9.6	2.4	1.2
ERPG-3	30	AEGL-3	216	72	36	9	4.5

Table 6.3-5 Health Effects of Soluble Uranium
(Page 1 of 1)

Health Effect	Uranium per kg body weight (mg U/kg)	Uranium (mg) in 70 kg person	Uranium Intake (mg) by 70 kg person
50% lethality	1.63	114	230
Threshold for permanent renal damage	0.3	21	40
Threshold for transient renal injury or effect	0.058	4.06	8.3
No effect	0.03	2.1	4.3

Table 6.3-6 Definition of Consequence Severity Categories
(Page 1 of 1)

	Receptor	High Consequence	Intermediate Consequence
Acute Radiological Doses	Worker	>100 rem TEDE	>25 rem TEDE
	Outside Controlled Area	>25 rem TEDE	>5 rem TEDE
Acute Chemical Exposure	Worker	>216 mg UF_6/m^3; >139 mg HF/m^3	>28 mg UF_6/m^3; >78 mg HF/m^3
	Outside Controlled Area (30-min exposure)	>28 mg HF/m^3 >21 mg U intake	>0.8 mg HF/m^3 >4.06 mg U intake
Radiological Release to Environment	Outside Restricted Area	not applicable	>5.47 mg U/m^3 (24-hr average)

FIGURES

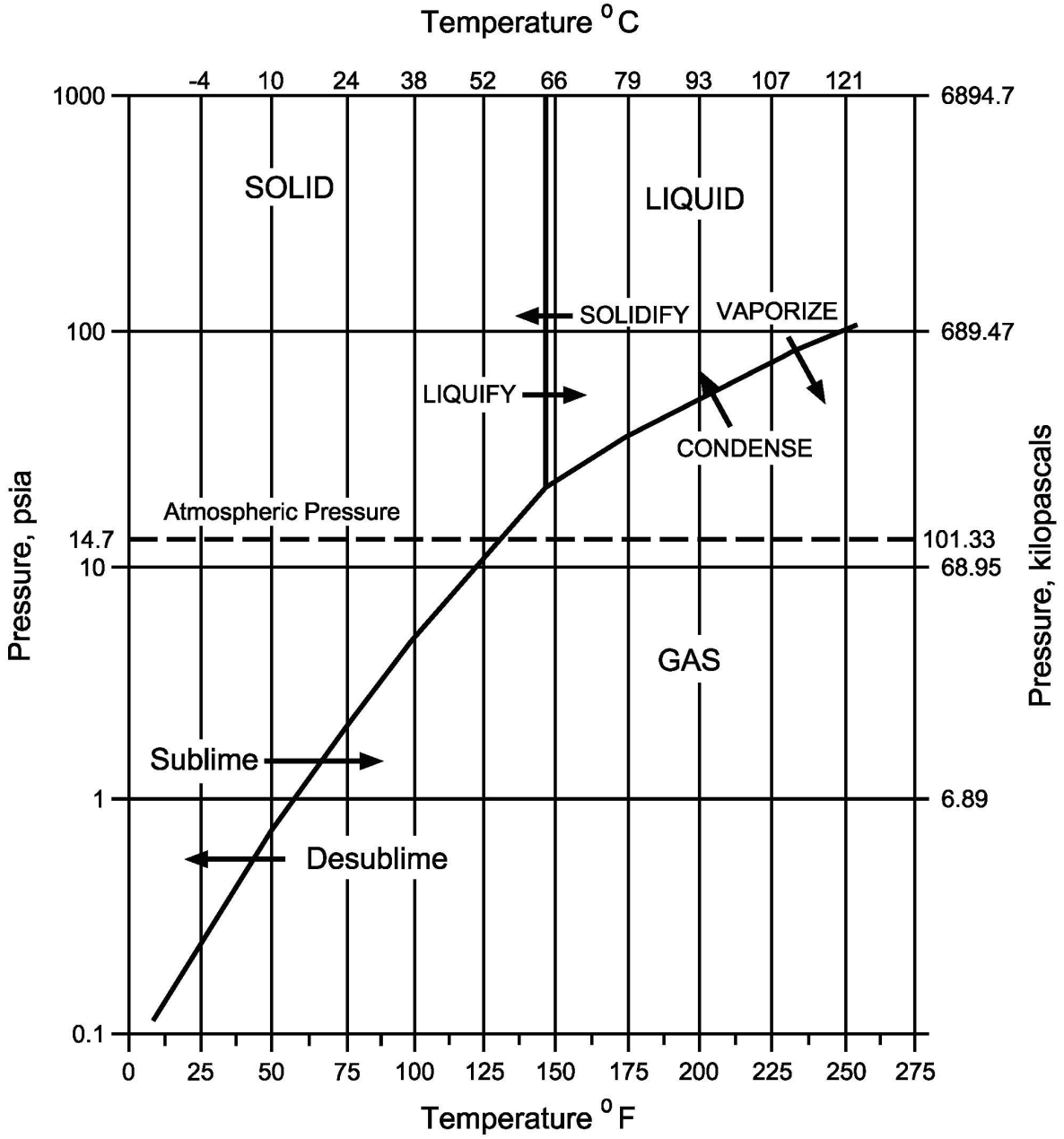

Figure 6.1-1 **Rev. 2**

UF_6 Phase Diagram

EAGLE ROCK ENRICHMENT FACILITY
SAFETY ANALYSIS REPORT

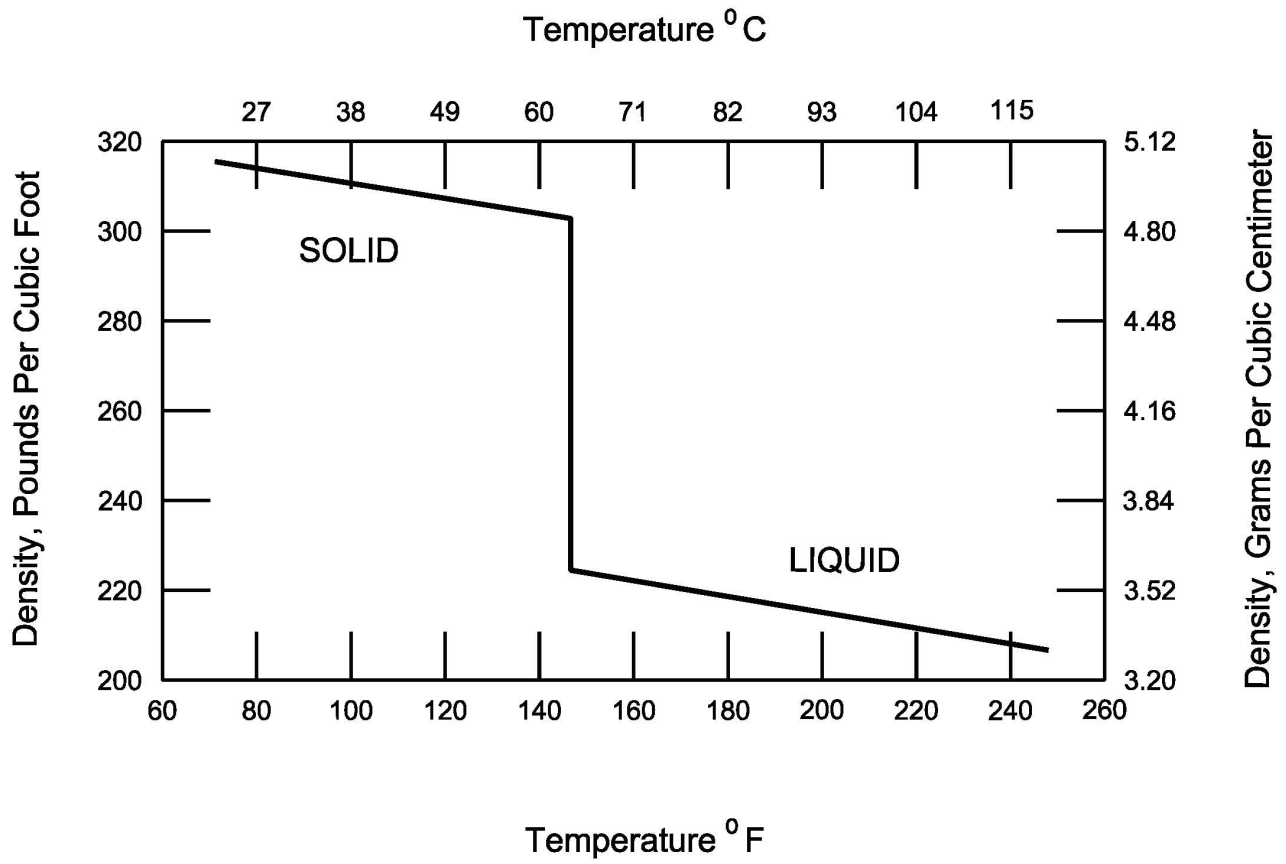

FIGURE 6.1-2 **Rev. 2**

Densities of Solid and Liquid UF_6

EAGLE ROCK ENRICHMENT FACILITY
SAFETY ANALYSIS REPORT

TABLE OF CONTENTS

Page

7.0 FIRE SAFETY 7.0-1

7.1 FIRE SAFETY MANAGEMENT MEASURES 7.1-1

7.1.1 Fire Protection IROFS 7.1-1

7.1.2 Management Policy and Direction 7.1-1

7.1.3 Fire Prevention 7.1-2

7.1.4 Inspection, Testing and Maintenance of Fire Protection Systems 7.1-2

7.1.5 Emergency Organization, Qualifications, Drills and Training 7.1-2

7.1.6 Pre-Fire Plans 7.1-3

7.2 FIRE HAZARDS ANALYSIS 7.2-1

7.3 FACILITY DESIGN 7.3-1

7.3.1 Building Construction 7.3-1

7.3.2 Fire Area Determination and Fire Barriers 7.3-2

7.3.3 Electrical Installation 7.3-3

7.3.4 Life Safety 7.3-3

7.3.5 Ventilation 7.3-3

7.3.6 Drainage 7.3-4

7.3.7 Lightning Protection 7.3-5

7.3.8 Criticality Concerns 7.3-5

7.3.9 Hydrogen Control 7.3-6

7.3.10 Diesel Fuel Oil Storage 7.3-6

7.3.11 Environmental Concerns 7.3-7

7.3.12 Physical Security Concerns 7.3-7

7.3.13 Baseline Design and Defense-in-Depth 7.3-7

7.4 PROCESS FIRE SAFETY 7.4-1

7.5 FIRE PROTECTION AND EMERGENCY RESPONSE 7.5-1

7.5.1 Fire Protection System 7.5-1

7.5.2 Fire Emergency Response 7.5-5

7.6 REFERENCES 7.6-1

LIST OF TABLES

None

LIST OF FIGURES

Figure 7.3-1 Separations Building Module/UF_6 Handling Area Basement Fire Barriers
Figure 7.3-2 Separations Building Module/UF_6 Handling Area First Floor Fire Barriers
Figure 7.3-3 Separations Building Module/UF_6 Handling Area Second Floor Fire Barriers
Figure 7.3-4 Separations Building Module/UF_6 Handling Area Roof Fire Barriers
Figure 7.3-5 Blending, Sampling and Preparation Building Fire Barriers
Figure 7.3-6 Technical Support/Operation Support Building First Floor Fire Barriers
Figure 7.3-7 Technical Support/Operation Support Building Second Floor Fire Barriers
Figure 7.3-8 Technical Support/Operation Support Building Third Floor Fire Barriers
Figure 7.5-1 Exterior Fire Protection System Overall Site Plan Sheet 1 of 2
Figure 7.5-1 Exterior Fire Protection System Overall Site Plan Sheet 2 of 2
Figure 7.5-2 Sprinkler System Coverage

7.0 FIRE SAFETY

This chapter documents the Eagle Rock Enrichment Facility (EREF) fire safety program. The fire safety program is part of the overall facility safety program and is intended to reduce the risk of fires and explosions at the facility. The facility safety program is described in Chapter 3, Integrated Safety Analysis (ISA) Summary. The fire safety program documents how the facility ensures fire safety.

The EREF fire safety program meets the acceptance criteria in Chapter 7 of NUREG-1520 (NRC, 2002) and is developed, implemented and maintained in accordance with the requirements of 10 CFR 70.62(a) (CFR, 2008a), 10 CFR 70.22 (CFR, 2008b), and 10 CFR 70.65 (CFR, 2008c). In addition, the fire safety program complies with 10 CFR 70.61 (CFR, 2008d), 10 CFR 70.62 (CFR, 2008a), and 10 CFR 70.64 (CFR, 2008e). NUREG/CR-6410 (NRC, 1998), NUREG-1513 (NRC, 2001), NRC Generic Letter 95-01 (NRC, 1995), and NFPA 801 (NFPA, 2008e) were utilized as guidance in developing this chapter.

The comparative differences between the EREF Fire Safety Program and measures prescribed for the National Enrichment Facility are as follows:

- The EREF will have automatic fire sprinkler coverage throughout the process facility structures except in those specific areas where safety analysis shows moderator control requirements take precedence.
- The EREF will provide limited standpipe coverage in the SBM and TSB/OSB to facilitate fire department response.

The basis for providing automatic sprinkler protection in process areas is to meet International Building Code requirements and to conform to recommendations of NFPA 801 to use sprinklers as the preferred type of automatic fire system – to the extent such use is consistent with criticality safety limits. Additionally, the off-site fire department response time to the site is longer than the NEF. Automatic sprinkler protection reduces the need to rely on fire brigade and fire department response and provides defense-in-depth.

Standpipes are being proposed to facilitate deployment of hose streams by the off-site fire department, again consistent with criticality safety limits.

The NEF and EREF also differ due to site characteristics including property boundary, facility layout, variations in building and area names, more exterior cylinder storage pads, different building construction types due to differing building code requirements and natural phenomenon hazard (NPH) parameters, as well as minor differences in UF_6 operations and process layout.

The NEF provided fire-rated enclosures to separate sodium fluoride chemical traps from adjacent spaces and provided gaseous fire suppression systems in these enclosures. The EREF does not have similar provisions. The Separations Building Modules, where the sodium fluoride traps are located, is already classified as an H-4 occupancy under the International Building Code due to the inventory of UF_6. The presence of the sodium fluoride chemical traps does not change this occupancy classification nor increase the fire hazard in the space, therefore, the separating enclosures and fire suppression systems are not required.

The information provided in this chapter, the corresponding regulatory requirement and the section of NUREG-1520 (NRC, 2002), Chapter 7 in which the Nuclear Regulatory Commission (NRC) acceptance criteria are presented is summarized below:

Information Category and Requirement	10 CFR 70 Citation	NUREG-1520 Chapter 7 Reference
Section 7.1 Fire Safety Management Measures	70.62(a), (d) & 70.64(b)	7.4.3.1
Section 7.2 Fire Hazards Analysis	70.61(b), (c) & 70.62(a)&(c)	7.4.3.2
Section 7.3 Facility Design	70.62(a), (c) & 70.64(b)	7.4.3.3
Section 7.4 Process Fire Safety	70.64(b) & 70.64(b)	7.4.3.4
Section 7.5 Fire Protection and Emergency Response	70.62(a), (c) & 70.64(b)	7.4.3.5

7.1 FIRE SAFETY MANAGEMENT MEASURES

Fire safety management measures establish the fire protection policies for the site. The objectives of the fire safety program are to prevent fires from starting and to detect, control, and extinguish those fires that do occur. The fire protection organization and fire protection systems at the EREF provide protection against fires and explosions based on the structures, systems, and components (SSC) and defense-in-depth practices described in this chapter. Select fire barriers and administrative controls are considered fire protection items relied on for safety (IROFS).

7.1.1 Fire Protection IROFS

Fire protection items relied on for safety (IROFS) are identified in Section 3.8 of the EREF Integrated Safety Analysis (ISA) Summary.

7.1.2 Management Policy and Direction

AREVA Enrichment Services, LLC (AES) is committed to ensuring that the IROFS, as identified in the ISA Summary, are available and reliable, and that the facility maintains fire safety awareness among employees, controls transient ignition sources and combustibles, and maintains a readiness to extinguish or limit the consequences of fire. The facility maintains fire safety awareness among employees through its General Employee Training Program. The training program is described in Chapter 11, Management Measures.

The responsibility for fire protection rests with the Environmental Health, Safety & Licensing Manager who reports to the President. The Environmental Health, Safety & Licensing Manager is assisted by the Safety, Security, and Emergency Preparedness Manager whose direct responsibility is to ensure the day-to-day safe operation of the facility in accordance with occupational safety including the fire safety program. The personnel qualification requirements for the Environmental Health, Safety & Licensing Manager and the Safety, Security, and Emergency Preparedness Manager are presented in Chapter 2, Organization and Administration. Fire protection engineering support is provided by the engineering manager. The Safety, Security, and Emergency Preparedness Manager is assisted by fire safety personnel who are trained in the field of fire protection and have practical day-to-day fire safety experience at nuclear facilities. The fire protection staff is responsible for the following:

- Fire protection program and procedural requirements
- Fire safety considerations
- Maintenance, surveillance, and quality of the facility fire protection features
- Control of design changes as they relate to fire protection
- Documentation and record keeping as they relate to fire protection
- Fire prevention activities (i.e., administrative controls and training)
- Organization and training of the fire brigade
- Pre-fire planning.

The facility maintains a Safety Review Committee (SRC) that reports to the President. The SRC performs the function of a fire safety review committee. The SRC provides technical and

administrative review and audit of plant operations including facility modifications to ensure that fire safety concerns are addressed.

Engineering review of the fire safety program is accomplished by configuration management and the SRC. Configuration management is discussed in Chapter 11, Management Measures, and the SRC is discussed in Chapter 2, Organization and Administration.

7.1.3 Fire Prevention

Administrative controls are used to maintain the performance of the fire protection systems and delineate the responsibilities of personnel with respect to fire safety. The primary fire safety administrative controls are those that relate to fire prevention. These fire prevention controls, in the form of procedures, primarily control the storage and use of combustible materials and the use of ignition sources. These controls include, but are not limited to, the following:

- Governing the handling of transient combustibles in buildings containing IROFS, including work-generated combustibles
- Implementing a permit system to control ignition sources that may be introduced by welding, flame cutting, brazing, or soldering operations
- Ensuring that the use of open flames or combustion-generated smoke for leak testing is not permitted
- Conducting formal periodic fire prevention inspections to (1) ensure that transient combustibles adhere to established limits based on the Fire Hazard Analysis; (2) ensure the availability and acceptable condition of fire protection systems/equipment, fire stops, penetration seals, and fire-retardant coatings; and (3) ensure that prompt and effective corrective actions are taken to correct conditions adverse to fire protection and preclude their recurrence
- Performing periodic housekeeping inspections
- Implementing a permit system to control the disarming of fire detection or fire suppression systems, including appropriate compensatory measures
- Implementing fire protection system inspection, testing, and maintenance procedures.

7.1.4 Inspection, Testing and Maintenance of Fire Protection Systems

An inspection, testing and maintenance program is implemented to ensure that fire protection systems and equipment remain operable and function properly when needed to detect and suppress fire. Fire protection procedures are written to address such topics as training of the fire brigade, reporting of fires, and control of penetration seals. The facility's Safety, Security, and Emergency Preparedness Manager has responsibility for fire protection procedures in general; with the facility's maintenance section having responsibility for certain fire protection procedures such as control of repairs to facility penetration seals. Refer to Chapter 11, Management Measures, for additional information on procedures and maintenance activities.

7.1.5 Emergency Organization, Qualifications, Drills and Training

The qualifications, drills and training of the fire brigade members who are part of the Emergency Organization are in accordance with NFPA 600 (NFPA, 2005a). The primary purpose of the Fire Brigade Training Program is to develop a group of facility employees trained in fire

prevention, fire fighting techniques, first aid procedures, and emergency response. They are trained and equipped to function as a team for fighting fires.

The Fire Brigade Training Program provides entrance and educational requirements for fire brigade candidates as well as the medical- and job-related physical requirements. The Fire Brigade Training Program provides for initial training of all new fire brigade members, semi-annual classroom training and drills, annual practical training, and leadership training for fire brigade leaders.

The EREF Emergency Plan also discusses the use of offsite emergency organizations, drills and training.

7.1.6 Pre-Fire Plans

Detailed pre-fire plans will be developed for use by the facility fire brigade.

The pre-fire plans include the location of fire protection equipment, approach paths for fire response, potential hazards in the area, power supply and ventilation isolation means, important plant equipment in the area and other information considered necessary by fire emergency response personnel.

7.2 FIRE HAZARDS ANALYSIS

A Fire Hazards Analysis (FHA) has been conducted evaluating fires at the facility which, if uncontrolled, could cause a release of UF_6 in quantity and form that may result in an intermediate or high consequence, as defined in 10 CFR 70.61 (CFR, 2008d). UF_6 is present in sufficient quantity for this to occur in the following areas: Separations Building Modules (SBM), Cylinder Receipt and Shipping Building (CRSB), UF_6 Handling Areas, Technical Support Building (TSB), Blending, Sampling and Preparation Building (BSPB), Trailer Parking, Full Product Cylinder Storage Pad, Full Tails Cylinder Storage Pads, and the Full Feed Cylinder Storage Pads.

The FHA develops bounding credible fire scenarios and then assesses the consequences of unmitigated fire.

The FHA for the facility consists of the following:

- A description of the facility's use and function
- The boundaries of fire areas
- The specific fire hazards and potential fire scenarios within the fire areas
- The methods of consequence analysis
- The occupancy and construction requirements
- Life safety requirements
- IROFS required for postulated fire scenarios within the fire area
- Methodology for evaluating the impact of fire on IROFS
- The facility response to fires
- Defense or mitigation strategy for overall facility protection.

The results of the FHA are utilized in the Integrated Safety Analysis (ISA) to identify possible fire initiators and accident sequences leading to radiological or toxic chemical consequences resulting from fire interaction on UF_6 or UF_6 byproducts.

The FHA is updated and controlled by configuration management as discussed in Chapter 11, Management Measures, to ensure that the information and analysis presented in the FHA are consistent with the current state of the facility. The FHA is reviewed and updated as necessary to incorporate significant changes and modifications to the facility, its processes, or combustible inventories.

7.3 FACILITY DESIGN

The design of the facility incorporates the following:

- Liimits on areas and equipment subject to contamination
- Design of facilities, equipment, and utilities to facilitate decontamination.

7.3.1 Building Construction

The facility consists of several different process-related buildings and functional areas:

Separations Building Modules (SBMs) which include the following areas:

  - Cascade Halls
  - Process Service Corridor
  - Link Corridor
  - Electrical and Mechanical Equipment Rooms
- UF_6 Handling Area
- Cylinder Receipt and Shipping Building (CRSB)
- Blending, Sampling, and Preparation Building (BSPB)
- Centrifuge Assembly Building (CAB)
- Full Feed, Full Product, Full Tails, and Empty Cylinder Storage Pads
- Technical Support Building (TSB)
- Operation Support Building (OSB)

There are also numerous utility support and non-process structures and areas including:

- Electrical Services Building (ESB)
- Electrical Services Building for the Centrifuge Assembly Building
- Mechanical Services Buildings (MSBs)
- Visitor Center
- Guard House
- Administration Building
- Security and Secure Administration Building
- Long and Short-Term Warehouses
- Electrical Switchyard
- Domestic Sanitary Sewage Treatment Plant
- Fire, Process, and Domestic Water Tanks and Pump Buildings
- Fuel Oil Storage Tanks
- Liquid Nitrogen (N_2) Package

- Gasoline and Diesel Fueling Station

The SBMs, UF_6 Handling Area, BSPB, TSB, and OSB are protected steel frame buildings with insulated metal panel exterior walls. Structural elements of these buildings are protected structural steel columns and trusses with built-up composite roofing on metal deck. Select interior walls are concrete or masonry as required by code or to support equipment loads. These process buildings all share at least one wall. Accordingly, to meet building code allowable area requirements, these are classified as Type IB in accordance with the IBC (ICC, 2006). This is equivalent to Type II, 222 construction per NFPA 220 (NFPA, 2006c).

The CRSB is separated from the other process buildings and will also be a protected steel frame building with insulated metal panel exterior walls and protected columns and trusses with built-up composite roofing on metal deck meeting Type IB construction requirements.

The CAB will be an unprotected steel frame building with insulated metal panel exterior walls and with built-up composite roofing on metal deck. This construction is classified as non-combustible Type IIB in accordance with the International Building Code (IBC) (ICC, 2006). This is equivalent to Type II, 000 construction per NFPA 220 (NFPA, 2006c). The CAB shares a portion of one wall with the SBMs. The separating construction at this interface will be fire-rated as required to separate the CAB from the adjoining process structures.

The remaining utility and non-process related structures including the Visitor Center, Security Buildings, Administration Building, Warehouses, Electrical and Mechanical Services Buildings, a Sanitary Sewage Treatment Plant, Gasoline and Diesel Fueling Station are all independent from the main plant process buildings. These structures will be unprotected steel frame buildings with insulated metal panel exterior meeting Type IIB construction.

All of the cylinder storage pads are open lay-down areas each consisting of a concrete pad with a dedicated collection and drainage system. Concrete saddles are used for fixed location storage of cylinders. Other stillages or stops may be used for interim storage or to secure cylinders temporarily during movement. There are no structures over any of the cylinder storage pads.

7.3.2 Fire Area Determination and Fire Barriers

The facility is subdivided into fire areas by barriers with fire resistance as required by the IBC (ICC, 2006), as required for specific hazards (e.g., National Electrical Code, NFPA 70 (NFPA, 2008c) requirements for transformer vaults), or as determined necessary by the FHA to ensure licensed material safety consistent with the ISA. The design and construction of fire barrier walls is in accordance with NFPA 221 (NFPA, 2006d). These fire areas are provided to limit the spread of fire, protect personnel and limit the consequential damage to the facility. Fire barriers for the main process structures are shown in Figures 7.3-1 through 7.3-8 . The fire resistance rating of fire barrier assemblies is determined through testing in accordance with NFPA 251 (NFPA, 2006e). Openings in fire barriers are protected consistent with the designated fire resistance rating of the barrier. Penetration seals provided for electrical and mechanical openings are listed to meet the guidance of ASTM E-814-02 (ASTM, 2002) or UL 1479 (UL, 2003). Penetration openings for ventilation systems are protected by fire dampers having a rating matched to that of the barrier per code. Door openings in fire rated barriers are protected with fire rated doors, frames and hardware in accordance with NFPA 80 (NFPA, 2007g).

7.3.3 Electrical Installation

All electrical systems at the facility are installed in accordance with NFPA 70 (NFPA, 2008c). Switchgear, motor control centers, panel boards, variable frequency drives, uninterruptible power supply systems and control panels are mounted in metallic enclosures and contain limited amounts of combustible material. Cable trays and conduits are metallic and the cables in cable trays are flame retardant and tested in accordance with the guidance of ANSI/IEEE 383 (ANSI / IEEE, 1974), IEEE 1202 (IEEE, 1991), UL 1277 (UL, 2001), or ICEA T-29-520 (ICEA, 1986).

Lighting fixtures are constructed of non-combustible materials and their ballasts are electronic and contain only an insignificant amount of combustible material.

All indoor transformers are dry type. Outdoor oil filled transformers are located in the local utilities substation yard which is located on the western portion of the property with adequate spatial separation from facility buildings so as not to present an exposure fire hazard.

An auxiliary power system is provided to supply power for temporary lighting, ventilation and radiation-monitoring equipment where potential radiation hazard exists.

Electrical conduits leading to or from areas with uranic material are sealed internally to prevent the spread of radioactive materials. Only utilities required for operation within areas having uranic material enter into these areas.

7.3.4 Life Safety

The buildings are provided with means of egress, illumination, and protection in accordance with the IBC (ICC, 2006) and NFPA 101 (NFPA, 2006b). Barriers with fire resistance ratings consistent with IBC (ICC, 2006), NFPA 101 (NFPA, 2006b), or the FHA are provided to prevent unacceptable fire propagation from impacting personnel egress.

All of the buildings are provided with emergency lighting for the illumination of the primary exit paths and in critical operations areas where personnel may need to operate valves, dampers and other controls in an emergency. Emergency lighting is considered as a critical load. All critical loads are fed from uninterruptible power supplies (UPSs) which are connected to the essential load motor control centers (MCCs). The UPSs receive power input from two incoming power sources, four diesel powered electric generators and stationary batteries. All power inputs to the UPS transfer automatically to another source if the first source fails. Thus, loads connected to the UPS are unaffected by offsite power and standby generator failure. See ISA Summary Section 3.5.2, Electrical System, for additional details on the UPS and Electrical System.

Marking of means of egress, including illuminated exit signs, are provided in accordance with NFPA 101 (NFPA, 2006b) and Chapter 10 of the IBC (ICC, 2006).

7.3.5 Ventilation

The building heating, ventilating and air conditioning (HVAC) system provides the primary form of ventilation employed at the facility. The HVAC system is designed to maintain room temperature and the specific environmental conditions associated with processes within a particular area.

The ventilation system is not engineered for smoke control. It is designed to shutdown in the event of a fire. Ductwork, accessories and support systems are designed and tested in

accordance with NFPA 801 (NFPA, 2008e), NFPA 90A (NFPA, 2002), NFPA 90B (NFPA, 2006a), and NFPA 91 (NFPA, 2004b). Flexible air duct couplings in ventilation and filter systems are noncombustible. Air entry filters are UL Class I.

The power supply and controls for mechanical ventilation systems are located outside the fire area served.

The process facilities are also provided with process-related ventilation systems specific to the support of UF_6 operations. These systems are the Gaseous Effluent Ventilation Systems (GEVS) which are provided for the SBMs (SBM GEVS also exhausts systems in the BSPB), the TSB, and the CAB Centrifuge Test and Post-Mortem rooms. These systems provide local exhaust when routine operations and maintenance activities are performed that involve opening a process system.

There are also select facility HVAC systems which perform a confinement ventilation function to effectively reduce the potential chronic exposure of workers by ensuring that areas that may contain dispersible radioactive materials during normal operations remain at a lower pressure than that of adjoining areas of the facility. The TSB HVAC system is designed to provide negative pressure for the following TSB areas: Decontamination Workshop, Chemical Trap Workshop, Mobile Unit Disassembly/Reassembly Workshop, Valve Dismantling Workshop, and the Maintenance Facility. Both the Ventilated Room in the BPSB and the Centrifuge Post Mortem and Test Area Rooms in the CAB are provided with dedicated HVAC systems that provide confinement ventilation for those spaces.

Ventilation ductwork from areas containing radioactive materials that pass through non-radioactive areas are constructed of non-combustible material and are protected from possible exposure to fire by materials having an appropriate fire resistance rating.

High efficiency particulate air (HEPA) filtration systems are utilized in both the GEVS systems and those HVAC systems which perform a confinement ventilation function. This includes the SBMs, TSB, and CAB Centrifuge Test and Post-Mortem Facilities GEVS systems, the TSB HVAC system that serves the negative pressure rooms described above, as well as the Ventilated Room HVAC system and the CAB Centrifuge Test and Post-Mortem Facilities HVAC system. HEPA filters are UL 586 (UL, 1996)(UL Class I), which are non-combustible. In all ventilation systems, the HEPA filters are enclosed in ductwork. The HEPA filtration systems are analyzed in the FHA. They are designed to shutdown in the event of a fire.

Smoke control is accomplished by the Fire Brigade and off-site Fire Department utilizing portable smoke removal equipment.

The various facility ventilation systems are described in ISA Section 3.5.1, Building Ventilation and the GEVS systems are described in ISA Sections 3.4.9 and 3.4.10.

7.3.6 Drainage

Water that may discharge from the fire water supply or suppression systems or from fire fighting activities could be contaminated with radioactive materials. Discharged water will be contained, stored, sampled, and treated if necessary (i.e., if the water is discharged in an area containing radiological materials). This also applies to areas used for chemical storage to ensure that other hazardous materials are not discharged inappropriately. Wall and floor interfaces will be made watertight. Provisions will be made at all pertinent door openings to prevent fire protection water from migrating outside of the contained area. If there is a possibility that the water could be contaminated with fissile uranium compounds, the containment methodology will be designed to be safe with respect to criticality. The drainage system design and associated

containment configuration will be addressed during the detailed design phase and the Safety Analysis Report will be revised, as appropriate. Water runoff from the Full Tails Cylinder, Full Feed Cylinder, Full Product Cylinder and Empty Cylinder Storage Pads will be collected in the Cylinder Storage Pads Stormwater Retention Basins. Liquid effluent monitoring associated with the Cylinder Storage Pads Stormwater Retention Basins is discussed in the Environmental Report.

7.3.7 Lightning Protection

Lightning protection for the facility is in accordance with NFPA 780 (NFPA, 2008d).

7.3.8 Criticality Concerns

Criticality controls will be provided by employing the basic principals of criticality safety. The premise of nuclear criticality prevention is that at least two, unlikely, independent, and concurrent changes in process conditions must occur before a criticality accident is possible. This double contingency principal is described in ANSI/ANS-8.1-1998 (ANSI, 1998). Controls or systems of controls are used to limit process variables in order to maintain safe operating conditions.

Moderation control is applied for criticality safety of UF_6 at the EREF. Automatic sprinkler systems will be provided in all process-related structures where required by the FHA. These systems are designed consistent with moderator control limitations to satisfy criticality safety criteria. The EREF FHA contains a methodology for the comparative evaluation of fire risk versus criticality risk for areas where moderator control is required. The methodology consists of decision-making hierarchy which systematically evaluates: 1) in-situ combustible quantities/configuration, 2) presence of transient combustibles, 3) presence of ignition sources, 4) presence of fissile materials, their quantity and configuration, 5) potential for water ingress in fissile containers, 6) potential to impact critically safe attributes (geometry, shapes, arrays, etc.), 7) reflection from external water spray, and 8) barriers that prevent inadvertent moderator introduction including their resilience under applicable design basis events. The completed analyses will be reviewed and approved by a criticality safety engineer.

Where double contingency principle cannot be satisfied (e.g., where fire might initiate a sprinkler activation concurrent with causing a leak in an enriched UF_6 vacuum piping system) or water is otherwise determined unacceptable by analysis, automatic sprinkler protection will be omitted or limited in coverage to ensure criticality safety is maintained or alternate fire protection measures will be taken. Figure 7.5-2 identifies those structures where sprinklers are proposed and moderator control is required. Nuclear Criticality Safety Analyses (NCSAs) will be performed to determine the specific moderator control attributes and sprinkler limitations.

With respect to fire hose streams, procedures and training for both onsite fire brigade and offsite fire department emphasize the need for moderator control in these areas. A criticality safety officer will be present anytime fire hose streams are to be deployed in a moderator control area. See Section 7.5 for additional information.

Fire protection concerns are also addressed in the moderation control areas by the fire protection program. The program includes administrative controls which limit the transient and in situ combustibles, controls ignition sources in these areas, and isolates these areas from other areas of the plant with appropriately rated fire barriers to preclude fire propagation to or from these areas. There are automatic detection and manual alarm systems located in these areas to ensure prompt response. Those elements of the fire protection program that are

credited fire protection IROFS are detailed in Chapter 3 of the Integrated Safety Analysis Summary.

See Chapter 5, Nuclear Criticality Safety, for additional discussion on criticality control.

7.3.9 Hydrogen Control

Hydrogen is used as an analytical gas in laboratories. In order to prevent the possibility of fire or explosion in the laboratory areas where hydrogen might accumulate will be protected by one or a combination of following features:

- Hydrogen piping will be provided with excess flow control.
- Hydrogen supply will be isolated by emergency shutoff valves interlocked with hydrogen detection in the area(s) served by the hydrogen piping.
- Natural or mechanical ventilation will be provided to ensure that hydrogen concentrations do not exceed 25% of the lower explosive limit. If mechanical ventilation is provided, it will be continuous or will be interlocked to start upon the detection of hydrogen in the area. Mechanical ventilation will also be provided with airflow sensors to sound an alarm if the fan becomes inoperative.

Hydrogen may also be generated at battery charging stations in the facility. In order to prevent the possibility of explosion or fire, areas where hydrogen might accumulate will be protected by a design which incorporates the following measures, as necessary, that are identified in NFPA 70E (NFPA, 2004a) and/or ANSI-C2, National Electrical Safety Code (ANSI/IEEE, 2007).

- Natural or mechanical ventilation will be provided to ensure that hydrogen concentrations do not exceed 25% of the lower explosive limit. If mechanical ventilation is provided, it will be continuous or will be interlocked to start upon the detection of hydrogen in the area. Mechanical ventilation will also be provided with airflow sensors to sound an alarm if the fan becomes inoperative.

7.3.10 Diesel Fuel Oil and Gasoline Storage

Diesel fuel oil is stored in exterior aboveground tanks to supply the facility standby diesel generators. These tanks will be provided with suitable separation, spill containment, and other protection features as required for “aboveground storage tanks” as defined in NFPA 30 (NFPA, 2008b).

Both gasoline and diesel fuel oil are stored adjacent to the Gasoline and Diesel Fueling Station (GDFS). These tanks will be provided with suitable separation, spill containment, and other protection features as required for “protected, aboveground storage tanks” as defined in NFPA 30.

GDFS operations and fuel dispensing will be in accordance with requirements of NFPA 30A (NFPA, 2008g). Fuel dispensing will be done using approved, automated dispensing equipment.

The storage tanks are located over 50 m (164 ft) from the nearest building housing UF_6, over 50 m (164 ft) from cylinder trailer delivery routes, and over 150 m (492 ft) from exterior pathways where UF_6 cylinders are handled in other than interstate transport configuration. The tanks will be diked or otherwise protected to ensure spills are contained in a manner that does not threaten process structures or cylinder transport routes.

7.3.11 Environmental Concerns

Radiological and chemical monitoring and sampling will be performed as specified in EREF Environmental Report, Chapter 6, Environmental Measurements and Monitoring Programs, on the contaminated and potentially contaminated facility liquid effluent discharge including water used for fire fighting purposes. Surface water runoff will be diverted into water collection basins. Water runoff from the Full Tails Cylinder, Full Feed Cylinder, Full Product Cylinder and Empty Cylinder Storage Pads will be collected in the Cylinder Storage Pads Stormwater Retention Basins. Water runoff from the remaining portions of the site will be collected in the Site Stormwater Detention Basin.

7.3.12 Physical Security Concerns

In no cases will security requirements prevent safe means of egress as required by the NFPA 101 (NFPA, 2006b) and the IBC (ICC, 2006).

The Physical Security Plan (PSP) addresses the establishment of permanent and temporary Controlled Areas. The PSP identifies the ingress and egress methodology during both normal and emergency conditions. This includes emergency response personnel both onsite and offsite. Two means of access to the site are provided, one via one of the two controlled gates continuously manned by Security and the other via designated emergency access gates (i.e., crash gates). Refer to the PSP for additional details.

7.3.13 Baseline Design and Defense-in-Depth

The FHA and the ISA demonstrate that the design and construction of the facility complies with the baseline design criteria (BDC) of 10 CFR 70.64(a) (CFR, 2008e), the defense-in-depth requirements of 10 CFR 70.64(b) (CFR, 2008e) and are consistent with the guidance provided in NFPA 801 (NFPA, 2008e). The design provides for adequate protection against fire and explosion by incorporating defense-in-depth concepts such that health and safety are not wholly dependent on any single element of the design, construction, maintenance or operation of the facility. This is accomplished by achieving a balance between preventing fires from starting, quickly detecting, controlling and promptly extinguishing those fires that do occur and protecting structures, systems and components such that a fire that is not promptly extinguished or suppressed will not lead to an unacceptable consequence.

7.4 PROCESS FIRE SAFETY

Chapter 6, Chemical Process Safety, describes the chemical classification process, the hazards of chemicals, chemical process interactions affecting licensed material and/or hazardous chemicals produced from licensed material, the methodology for evaluating hazardous chemical consequences, and chemical safety assurance. The only process chemical of concern is uranium hexafluoride (UF_6). UF_6 is not flammable and does not disassociate to flammable constituents under conditions at which it will be handled at the EREF. The two byproducts in the event of a UF_6 release are hydrogen fluoride (HF) and uranyl fluoride (UO_2F_2) and neither presents a process fire safety hazard. The Integrated Safety Analysis Summary has analyzed the hazards associated with the processes performed at the facility. The analysis did identify select individual process fire safety hazards. The heater/chiller units for the heating and chilling of UF_6 cold traps contain a combustible silicone oil-based heat transfer media. These chillers contain a limited volume of oil and are operated at high temperature limits below the oil flash point. Safety features were applied to ensure that these units will not fail in a condition that would result in fire exposure to local UF_6 containing components.

There are other process components (e.g., pumps, fans, centrifuge drives, etc.) powered by electrical motors and/or that have lubricant systems that could fail and result in a local fire. None of these other failures were found to exacerbate fire impact to process components beyond being an initiator for a general area fire. Accordingly, they were evaluated in the area by area analysis in the FHA. Refer to Chapter 3 of the Integrated Safety Analysis Summary and Chapter 6, Chemical Process Safety for additional information.

7.5 FIRE PROTECTION AND EMERGENCY RESPONSE

This section documents the fire protection systems and fire emergency response organizations provided for the facility.

7.5.1 Fire Protection System

The facility fire protection systems consist of a dedicated fire water supply and distribution system, automatic suppression systems, standpipe and hose systems, portable fire extinguishers, fire detection and alarm systems, fire pump control systems, valve position supervision, system maintenance and testing, fire prevention program, fire department/fire brigade response and pre-fire plans.

7.5.1.1 Fire Water Supply and Distribution System

A single Fire Water Supply System provides storage and distribution of water to fire protection features and systems that protect the entire facility as shown in Figures 7.5-1 Sheets 1 and 2, Exterior Fire Protection System Overall Site Plan, and Figure 7.5-2, Sprinkler System Coverage.

7.5.1.1.1 System Description

A reliable fire protection water supply and distribution system of adequate flow, pressure, and duration is provided based on the characteristics of the site and the FHA. The fire protection water supply and distribution system is based on the largest fixed fire suppression system demand, including a hose stream allowance, in accordance with NFPA 13 (NFPA, 2007b). The fire protection water supply consists of two 757,082 L (200,000 gal) (minimum) water storage tanks designed and constructed in accordance with NFPA 22 (NFPA, 2008a). The tanks are used for both fire protection water supply and process water supply. A reserve quantity of 681,374 L (180,000 gal) is maintained in the bottom of each tank for fire protection purposes. The elevation of the suction line for the process water pump is above the level of the required fire protection water supply in each tank. Thus the process water pump cannot pump water required for fire protection purposes. The fire protection water supply in each tank is sized for the maximum anticipated water supply needed to control and extinguish the design basis fire at the facility. Two, 5678 l/min at 10.35 bar (1500 gpm at 150 psi) horizontal, centrifugal, fire pumps designed and installed in accordance with NFPA 20 (NFPA, 2007d) are provided. For redundancy the capacity of the fire protection water supply is designed to ensure that 100% of the required flow rate and pressure are available in the event of failure of one of the water storage tanks or fire pumps. The maximum demand anticipated based on a design basis fire is 5678 l/min (1500 gpm) based on 3785 l/min (1000 gpm) flowing from a building sprinkler system plus 1892 l/min (500 gpm) for hose streams for a duration of two hours. The tanks are arranged so that one will be available for suction at all times.

Fill and make up water for the storage tanks are from the well water supply on-site which is capable of filling the fire protection water inventory in a single storage tank in an 8-hour period.

The fire water supply system distribution piping for the plant is designed and installed in accordance with NFPA 24 (NFPA, 2007e). The distribution system, including piping associated with the fire pumps is looped and arranged so that a single pipe break or valve failure will not totally impair the system per the Fire Hazard Analysis and NFPA 801 (NFPA, 2008e). Through appropriate valve alignment, either fire pump can take suction from either storage tank and discharge through either leg of the underground piping loop. The system piping is sized so that the largest sprinkler system demand in a process structure (including hose stream allowance) is

met with the hydraulically shortest flow path assumed to be out of service. Sectional control valves are arranged to provide adequate sectional control of the fire main loop to minimize protection impairments. All fire protection water system control valves are monitored under a periodic inspection program and their proper positioning is supervised in accordance with NFPA 801 (NFPA, 2008e). Exterior fire hydrants, equipped with separate shut-off valves on the branch connection, are provided at intervals to ensure complete coverage of all facility structures, including the Full Tails Cylinder, Full Feed Cylinder, Full Product Cylinder, and Empty Cylinder Storage Pads Cylinder Storage Pads.

The fire pumps are separated from each other by fire-rated barrier construction. One fire pump is electric-motor driven and one is diesel engine-driven to avoid common mode failure (e.g., bad fuel). The electric fire pump is powered from a normal (non-diesel backed) power supply. A dedicated diesel fuel tank is provided in or adjacent to the fire pump building for the diesel-engine driven pump and is sized to provide a minimum eight hour supply of fuel in accordance with NFPA 20 (NFPA, 2007d). The diesel fuel tank will have suitable spill containment.

Each pump is equipped with a dedicated listed controller. The pumps are arranged for automatic start functions upon a drop in the system water pressure as detected by pressure switches contained within the pump controllers. Use of start delay timers prevents simultaneous start of both pumps. Both pumps are maintained in the automatic start condition at all times, except during periods of maintenance and testing. Each fire pump controller interfaces with the site-wide fire alarm system, which is monitored and annunciated in the Control Room, for all alarm and trouble conditions required by NFPA 20 (NFPA, 2007d). Remote manual fire pump start switches are provided in the Control Room. Once activated, the fire pumps can only be shut-off at the pump controller location. Pumps, suction and discharge piping and valves are provided and arranged in accordance with NFPA 20 (NFPA, 2007d). The Fire Pump Building is provided with automatic sprinkler protection.

A jockey pump is provided in the Fire Pump Building to maintain pressure in the fire protection system during normal operation.

7.5.1.1.2 System Interfaces

The Fire Water Supply System interfaces with the site well water supply that supplies fill and make up water to the fire water supply storage tanks.

7.5.1.1.3 Safety Considerations

Failure of the Fire Water Supply System will not endanger public health and safety. The system is designed to assure water supply to automatic fire protection systems, standpipe systems and to fire hydrants located around the facility. This is accomplished by providing redundant water storage tanks and redundant fire pumps which are not subject to a common failure, electrical or mechanical.

7.5.1.2 Standpipe and Hose Systems

As required by the FHA, standpipe systems and interior fire hose stations are provided and installed in accordance with NFPA 14 (NFPA, 2007c) in the following locations:

- Class I standpipe systems for fire brigade and the offsite fire department use are provided in the stairwells of the Process Service Corridor of the SBMs and the stairwells in TSB and OSB.

The systems are designed to provide a minimum flow recommended by NFPA 14 (NFPA, 2007c) for class I standpipe systems. The standpipe risers are separated from the building sprinkler system risers. The separation ensures that a single impairment will not disable both the sprinklers and the hose systems. Standpipes will be routed in a manner and suitably designed against NPH criteria to ensure their failure will not result in flooding of areas containing enriched uranium above a critical mass.

The remaining structures and areas of the site are two stories or less in height and are reachable by fire hose extended from the outside fire hydrants or fire apparatus.

In addition to fixed standpipes, the EREF will be provided with fire hose on mobile apparatus and/or at strategic locations throughout the facility. The amount of hose provided will be sufficient to ensure that all points within the facility will be able to be reached by at least two 38 mm (1½-in) diameter attack hose lines and one 64 mm (2½-in) diameter backup hose line consistent with NFPA 1410 (NFPA, 2005b). These lines are intended for use by the offsite fire response agencies in the event of a structural fire. Hydraulic margin for these hose lines will be sufficient to ensure minimum nozzle pressures of 4.5 bar (65 psig) for attack hose line(s) and 6.9 bar (100 psig) for the backup hose line.

7.5.1.3 Portable Extinguishers

Portable fire extinguishers are installed throughout all buildings in accordance with NFPA 10 (NFPA, 2007a). Multi-purpose extinguishers are provided in general areas for Class A, B, or C fires.

The portable fire extinguishers are spaced within the travel distance limitation and provide the area coverage specified in NFPA 10 (NFPA, 2007a). Specialized extinguishers are located in areas requiring protection of particular hazards. Supplemental fire extinguishers will be provided in water exclusion areas. In areas where water discharge is prohibited due to moderator control constraints, the preferred fire extinguisher agent is carbon dioxide due to its suitability for use on electrical equipment and lack of hydrogenous moderator.

7.5.1.4 Automatic Suppression Systems

Fire sprinkler systems are engineered to protect specific hazards in accordance with parameters established by the FHA. NFPA 801 (NFPA, 2008e) requires that fire sprinkler systems be provided for the nuclear related process areas of the facility except where determined unnecessary or inappropriate by the FHA. For the EREF, there are areas where sprinklers may be omitted or only provide partial coverage due to the need to mitigate the risk of criticality. In these cases, other controls to mitigate the impact of fire will be provided as required. The EREF FHA contains a methodology for comparative evaluation of fire risk and criticality risk. This methodology will be applied during detailed design to determine where sprinkler coverage should be limited or omitted and what other controls (i.e., alternate suppression, limitations on combustibles, etc.) should be applied.

The areas proposed for sprinkler system coverage are shown in Figure 7.5-2, Sprinkler System Coverage including notation of structures/areas where moderator control concerns may limit sprinkler application or coverage.

Automatic preaction sprinkler systems designed and tested in accordance with NFPA 13 (NFPA, 2007b) are provided in following buildings, subject to moderator control restrictions:

- Process Service Corridor in the Separations Building Module

- UF_6 Handling Area
- Technical Support Building
- Blending, Sampling and Preparation Building

Automatic wet pipe sprinkler systems, designed and tested in accordance with NFPA 13 (NFPA, 2007b) are provided in the following buildings:

- Administration Building
- Security and Secure Administration Building
- Long Term Warehouse
- Fire Pump Building
- Centrifuge Assembly Building
- Operation Support Building
- Short Term Warehouse

Water flow detection is provided to alarm and annunciate all sprinkler system actuations. Sprinkler system control valves are monitored under a periodic inspection program and their proper positioning is supervised in accordance with NFPA 801 (NFPA, 2008e) to ensure the systems remain operable.

7.5.1.5 Fire Detection Systems

Facility structures are provided with automatic fire detection installed in accordance with NFPA 72 (NFPA, 2007f) as required by the FHA or in accordance with the IBC (ICC, 2006). Automatic smoke, heat, or fire detectors are installed as appropriate to the hazard in all process structures as required by the FHA or in accordance with IBC (ICC, 2006) for early detection of fire conditions and/or to actuate preaction sprinkler valves to charge sprinkler piping in the protected areas.

All structures protected by wet-pipe sprinkler systems will have sprinkler water flow and other system conditions monitored and alarmed in accordance with NFPA 72 (NFPA, 2007f).

7.5.1.6 Manual Alarm Systems

All facility structures are provided with manual fire alarm pull stations installed in accordance with NFPA 72, (NFPA, 2007f), NFPA 101 [Life Safety Code] (NFPA, 2006b); and as required by the FHA.

7.5.1.7 Fire Alarm System

Each building of the facility is monitored by a local fire alarm control panel (LFACP) installed in accordance with NFPA 72 (NFPA, 2007f). Each panel has a dual power supply, consisting of normal building power and backup power by either 24-hour battery or the facility UPS. The method of backup power will be determined in final design. Activation of a fire detector, manual pull station or water flow device results in an audible and visual alarm at the building control panel and the main fire alarm control panel.

The main fire alarm control panel (MFACP), located in the Control Room, is a listed, microprocessor-based addressable console connected via data highway to each individual

LFACP. The MFACP has dual power supplies, consisting of normal building power and backup power by either 24-hour battery or the facility UPS. The method of backup power will be determined in final design. The MFACP monitors all functions associated with the individual building alarm panels and the fire pump controllers. All fire alarms, suppression system actuation alarms, supervisory alarms, and trouble alarms are audibly and visually annunciated by the MFACP and automatically recorded via printout. Failure of the MFACP will not result in failure of any building's LFACP and its associated local control functions (e.g., releasing or local alarming).

All fire pump alarm and trouble conditions are monitored by the MFACP through the fire pump controllers and annunciated in accordance with NFPA 20 (NFPA, 2007d).

7.5.2 Fire Emergency Response

7.5.2.1 Fire Brigade

The facility maintains a fire brigade made up of employees trained in fire prevention, fire fighting techniques, first aid procedures, emergency response, and criticality safety. The fire brigade is organized, operated, trained and equipped in accordance with NFPA 600 (NFPA, 2005a). The criticality safety training addresses water moderation, water reflection, product cylinder safety by moderation control, and water flooding. The fire brigade is considered an incipient fire brigade as classified under NFPA 600, e.g., not required to wear thermal protective clothing nor self-contained breathing apparatus during firefighting. The intent of the facility fire brigade is to respond and control minor fires and provide first response and supplement the offsite fire department for any major fire at the plant. The fire brigade members are trained and equipped to respond to all fire emergencies and take first response actions until the offsite fire department arrives. First response firefighting by the brigade includes using hand portable or wheeled fire extinguishers and advancing hoselines to fight interior/exterior incipient fires and to fight larger exterior fires in a defensive mode (e.g., vehicle fires). Fire brigade members will not perform firefighting where conditions warrant structural firefighting gear.

When the local fire department arrives onsite, the local fire department assumes control and is responsible for all fire fighting activities. The plant fire brigade, working with the plant's Emergency Operations Center, will coordinate offsite fire department activities to ensure moderator control and criticality safety. The fire brigade is staffed so that there are a minimum of five fire brigade members available per shift. The fire brigade includes a safety officer who is responsible to ensure that moderator control and criticality safety are maintained during firefighting activities.

Periodic training is provided to offsite assistance organization personnel in the facility emergency planning procedures. Facility emergency response personnel meet at least annually with each offsite assistance group to accomplish training and review items of mutual interest including relevant changes to the program. This training includes facility tours, information concerning facility access control (normal and emergency), potential accident scenarios, emergency action levels, notification procedures, exposure guidelines, personnel monitoring devices, communications, contamination control, moderator control issues, and the offsite assistance organization role in responding to an emergency at the facility, as appropriate.

7.5.2.2 Offsite Organizations

AES will use the services of local offsite fire departments to supplement the capability of the facility Fire Brigade. The primary agency that will be available for this response is the City of

Idaho Falls, Idaho Fire Department. This agency is a signatory to the Bonneville County Mutual Aid agreement and can request assistance from other signatory agencies including adjacent municipal fire departments and the fire/emergency response services of the US Department of Energy's Idaho National Laboratory as warranted. A letter has been received from the Bonneville County Fire Protection District #1 (which includes response by the Idaho Falls Fire Department) including a commitment to fire protection and emergency response to the EREF. The training and conduct of emergency drills is discussed in the EREF Emergency Plan.

AES has performed a baseline needs assessment evaluating the response to fires and related emergencies to confirm adequacy of the response considering both facility resources and response of the primary response agencies. This assessment identified that adequate response is available.

The Idaho Falls Fire Department is comprised of a roster of approximately 100 paid personnel – 24 response personnel per shift staffing five fire stations in a three-shift rotation. The department has five front-line engine companies (pumpers) and five in reserve, one 30 m (100 ft) telescoping platform, one heavy rescue truck and four light duty rescue/wildland trucks, three water tenders [6813 L (1800 gal), 11,356 L (3000 gal), and 12,114 L (3200 gallon)] tankers, one hazmat response vehicle, several command vehicles and ten ambulances equipped to provide advanced level life support. Six ambulances are staffed per shift with four in reserve.

All emergency response personnel are required to be a minimum Firefighter Level I and EMT – Basic per Idaho standard. Shift assigned ambulance personnel are qualified as Intensive Care Paramedics per Idaho standards.

The estimated response time to the EREF for a basic life support ambulance is 26 minutes with a second ambulance available within an additional one to three minutes. EREF personnel will be trained and equipped to provide first aid and circulatory/respiratory support in the interim (e.g., provide CPR, apply automatic external defibrillation, and administer oxygen). The estimated response time to EREF for a structural fire engine and full structural crew is 28 minutes with a second engine company within an additional one to three minutes. The initial response for a structural first alarm would be three engines, a rescue truck, an ambulance, and a staff officer. In the event of a fire, the EREF fire brigade will respond and the Idaho Falls Fire Department will be notified to respond. If the fire is incipient, the EREF fire brigade will fight the fire utilizing hand portable/wheeled fire extinguishers and/or 38 mm (1½-in) hose lines. If a structural response becomes necessary, 38 mm (1½-in) and/or 64 mm (2½-in) hose lines from facility standpipes or hydrants to the nearest points to the fire will be extended by the EREF fire brigade, where it can be done safely. The latter activity will minimize deployment time for the offsite responders upon their arrival. Given the presence of automatic fire sprinklers in the process areas and other occupied facility structures, it is unlikely that a rapid structural response for fire suppression or occupant rescue would be required.

To ensure that application of water or other firefighting activities are consistent with moderator concerns for criticality safety, the EREF fire brigade safety officer is trained and equipped to don structural firefighting gear and will accompany offsite responders to the firefighting location. A minimum of two individuals qualified to serve as the EREF fire brigade safety officer will be onsite during plant operation.

In order to respond to airborne release emergencies or other chemical incidents, EREF will also maintain hazardous material response capability. This is further described in SAR Section 6.4.8, Emergency Planning.

Through a combination of onsite capability, offsite responders, or through contract arrangements, AES will ensure that capabilities are in place to respond to other events such as

confined space rescue, trench rescue, high angle rescue, and other technical emergencies as required. The EREF fire brigade/emergency response team equipment will be inventoried, inspected and tested in accordance with recognized standards. Final needs for these response areas and response equipment will be reassessed after detailed facility design to ensure adequate response capabilities are in place and training completed prior to any construction activities.

7.6 REFERENCES

ANSI/IEEE, 1974. IEEE Standard for Type Test of Class 1E Electric Cables, Field Splices, and Connections for Nuclear Power Generating Stations, ANSI/IEEE Std – 383-1974, American National Standards Institute / Institute of Electrical and Electronics Engineers, 1974.

ANSI, 1998. Nuclear Criticality Safety in Operations with Fissionable Materials Outside Reactors. ANSI/ANS-8.1-1998, American National Standards Institute/American Nuclear Society, 1998.

ANSI/IEEE, 2007. National Electrical Safety Code, ANSI-C2-2007, American National Standards Institute/Institute of Electrical and Electronics Engineers, 2007.

ASTM, 2002. Standard Test Method for Fire Tests of Through-Penetration Fire Stops, ASTM E-814-02, American Society of Testing and Materials, 2002.

CFR, 2008a. Title 10, Code of Federal Regulations, Section 70.62, Safety Program and Integrated Safety Analysis, 2008.

CFR, 2008b. Title 10, Code of Federal Regulations, Section 70.22, Contents of Applications, 2008.

CFR, 2008c. Title 10, Code of Federal Regulations, Section 70.65, Additional Content of Applications, 2008.

CFR, 2008d. Title 10, Code of Federal Regulations, Section 70.61, Performance Requirements, 2008.

CFR, 2008e. Title 10, Code of Federal Regulations, Section 70.64, Requirements for New Facilities or New Processes at Existing Facilities, 2008.

I**CC, 2006.** International Building Code, International Code Council. 2006.

ICEA, 1986. Vertical Cable Tray Flame Tests @ 210,000 Btu, ICEA Standard T-29-520-1986, Insulated Cable Engineers Association, 1986.

IEEE, 1991. IEEE Standard for Flame Testing of Cables for Use in Cable Tray in Industrial and Commercial Occupancies, IEEE 1202, Institute of Electrical and Electronics Engineers, 1991.

NFPA, 2002. Standard for the Installation of Air Conditioning and Ventilating Systems, NFPA 90A, National Fire Protection Association, 2002.

NFPA, 2004a. Standard for Electrical Safety in the Workplace, NFPA 70E, National Fire Protection Association, 2004.

NFPA, 2004b. Standard for Exhaust Systems for Air Conveying of Vapors, Gases, Mists, and Noncombustible Particulate Solids, NFPA 91, National Fire Protection Association, 2004.

NFPA, 2005a. Standard on Industrial Fire Brigades, NFPA 600, National Fire Protection Association, 2005.

NFPA, 2005b. Standard on Training for Emergency Scene Operations, NFPA 1410, National Fire Protection Association, 2005.

NFPA, 2006a. Standard for the Installation of Warm Air Heating and Air Conditioning Systems, NFPA 90B, National Fire Protection Association, 2006.

NFPA, 2006b. Life Safety Code®, NFPA 101, National Fire Protection Association, 2006.

NFPA, 2006c. Standard on Type of Building Construction, NFPA 220, National Fire Protection Association, 2006.

NFPA, 2006d. Standard for High Challenge Fire Walls, Fire Walls, and Fire Barrier Walls, NFPA 221, National Fire Protection Association, 2006.

NFPA, 2006e. Standard Methods of Tests of Fire Endurance of Building Construction and Materials, NFPA 251, National Fire Protection Association, 2006.

NFPA, 2007a. Standard for Portable Fire Extinguishers, NFPA 10, National Fire Protection Association, 2007.

NFPA, 2007b. Installation of Sprinkler Systems, NFPA 13, National Fire Protection Association, 2007.

NFPA, 2007c. Standard for the Installation of Standpipe, Private Hydrants and Hose Systems, NFPA 14, National Fire Protection Association, 2007.

NFPA, 2007d. Standard for the Installation of Stationary Pumps for Fire Protection, NFPA 20, National Fire Protection Association, 2007.

NFPA, 2007e. Standard for the Installation of Private Fire Service Mains and Their Appurtenances, NFPA 24, National Fire Protection Association, 2007.

NFPA, 2007f. National Fire Alarm Code®, NFPA 72, National Fire Protection Association, 2007.

NFPA, 2007g. Standard for Fire Doors and Fire Windows, NFPA 80, National Fire Protection Association, 2007.

NFPA, 2008a. Standard for Water Tanks for Private Fire Protection, NFPA 22, National Fire Protection Association, 2008.

NFPA, 2008b. Flammable and Combustible Liquids Code, NFPA 30, National Fire Protection Association, 2008.

NFPA, 2008c. National Electric Code®, NFPA 70, National Fire Protection Association, 2008.

NFPA, 2008d. Standard for the Installation of Lightning Protection Systems, NFPA 780, National Fire Protection Association, 2008.

NFPA, 2008e. Standard for Fire Protection for Facilities Handling Radioactive Materials, NFPA 801, National Fire Protection Association, 2008.

NFPA, 2008f. Standard on Carbon Dioxide Extinguishing Systems, NFPA 12, National Fire Protection Association, 2008

NFPA, 2008f. Standard on Clean Agent Fire Extinguishing Systems, NFPA 2001, National Fire Protection Association, 2008

NFPA, 2008g. Code for Motor Fuel Dispensing Facilities and Repair Garages, NFPA 30A, National Fire Protection Association, 2008.

NRC, 1995. NRC Staff Technical Position on Fire Protection for Fuel Cycle Facilities, Generic Letter 95-01, U.S. Nuclear Regulatory Commission, January 1995.

NRC, 1998. Nuclear Fuel Cycle Facility Accident Analysis Handbook, NUREG/CR-6410, U.S. Nuclear Regulatory Commission, May 1998.

NRC, 2001. Integrated Safety Analysis Guidance Document, NUREG–1513, U.S. Nuclear Regulatory Commission, May 2001.

NRC, 2002. Standard Review Plan for the Review of a License Application for a Fuel Cycle Facility, NUREG-1520, U.S. Nuclear Regulatory Commission, March 2002.

UL, 1996. Standard for High-Efficiency Particulate, Air Filter Units, UL Standard 586, 8th edition, Underwriters Laboratories, Inc., December 1996.

UL, 2001. Standard for Electrical Power and Control Tray Cables with Optional Optical-Fiber Members, UL Standard 1277, 4th edition Underwriters Laboratories, Inc., November 2001.

UL, 2003. Fire Tests of Through-Penetration Fire Stops, UL Standard 1479, 3rd edition Underwriters Laboratories, Inc., May 2003.

Figure 7.3-1, Separations Building Module/UF_6 Handling Area Basement Fire Barriers contains Security-Related Information Withheld from Disclosure under 10 CFR 2.390

Figure 7.3-2, Separations Building Module/UF_6 Handling Area First Floor Fire Barriers contains Security-Related Information Withheld from Disclosure under 10 CFR 2.390

Figure 7.3-3, Separations Building Module/UF_6 Handling Area Second Floor Fire Barriers contains Security-Related Information Withheld from Disclosure under 10 CFR 2.390

Figure 7.3-4, Separations Building Module/UF_6 Handling Area Roof Fire Barriers contains Security-Related Information Withheld from Disclosure under 10 CFR 2.390

Figure 7.3-5, Blending, Sampling and Preparation Building Fire Barriers contains Security-Related Information Withheld from Disclosure under 10 CFR 2.390

Figure 7.3-6, Technical Support/Operation Support Building First Floor Fire Barriers contains Security-Related Information Withheld from Disclosure under 10 CFR 2.390

Figure 7.3-7, Technical Support/Operation Support Building Second Floor Fire Barriers contains Security-Related Information Withheld from Disclosure under 10 CFR 2.390

Figure 7.3-8, Technical Support/Operation Support Building Third Floor Fire Barriers contains Security-Related Information Withheld from Disclosure under 10 CFR 2.390

Figure 7.5-1 (Sheet 1 of 2), Exterior Fire Protection System Overall Site Plan contains Security-Related Information Withheld from Disclosure under 10 CFR 2.390

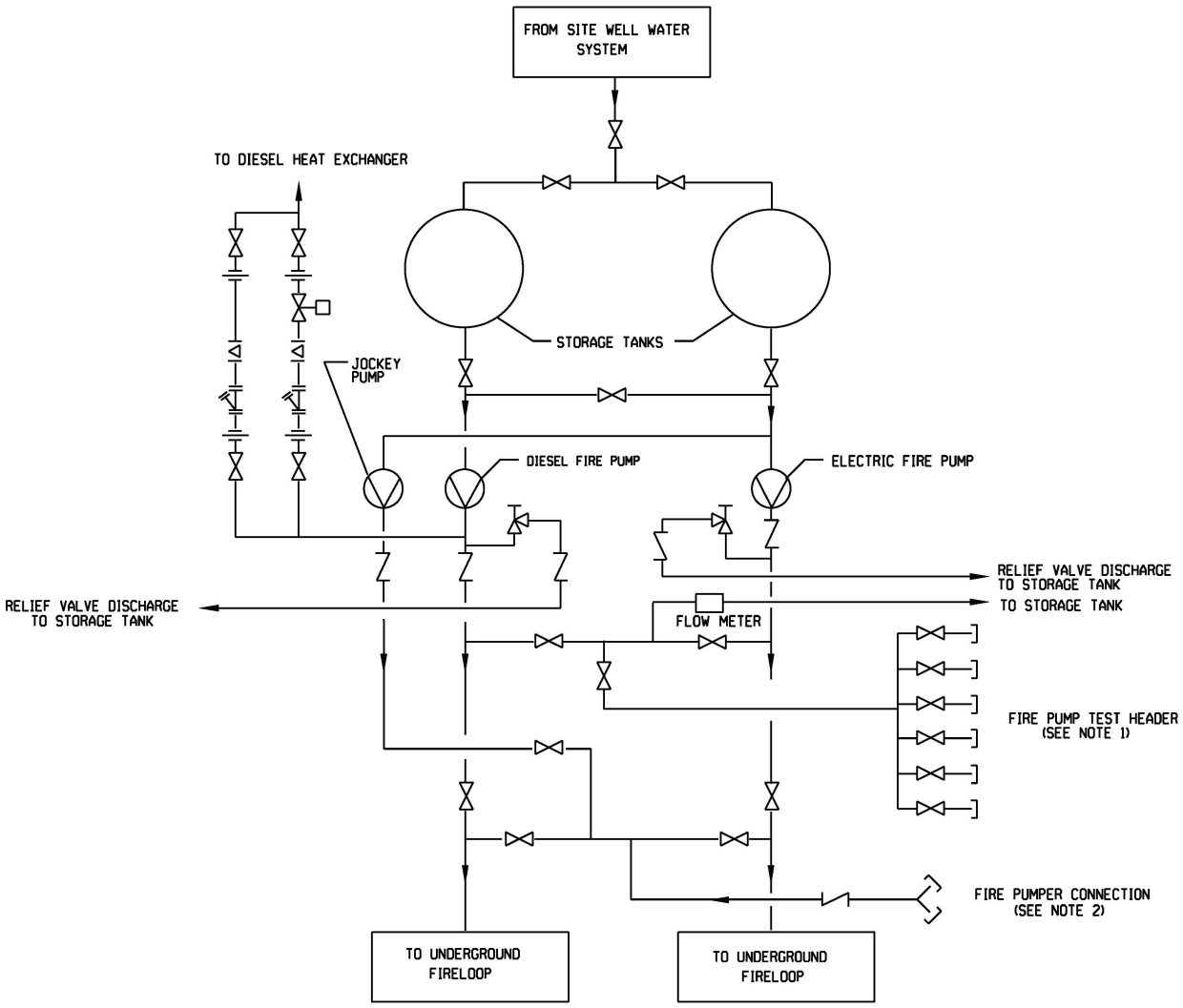

NOTES

1. SIX 85 MM (2½IN.) HOSE CONNECTIONS FOR FIRE PUMP DISCHARGE TEST.
2. STANDARD FIRE DEPARTMENT CONNECTION WITH TWO HOSE INLETS WITH PLUGS AND CHAIN.

FIRE PROTECTION - LEGEND

- VALVE
- CHECK VALVE
- RELIEF VALVE
- STRAINER
- REGULATOR VALVE
- SOLENOID VALVE
- UNION
- FLOW DIRECTION

FIGURE 7.5-1 **Rev. 2**

EXTERIOR FIRE PROTECTION SYSTEM OVERALL SITE PLAN
SHEET 2 OF 2

EAGLE ROCK ENRICHMENT FACILITY SAFETY ANALYSIS REPORT

Figure 7.5-2, Sprinkler System Coverage, contains Security-Related Information Withheld from Disclosure under 10 CFR 2.390

TABLE OF CONTENTS

Page

8.0 EMERGENCY MANAGEMENT 8.1-1

8.1 REFERENCES 8.1-1

LIST OF TABLES

None

LIST OF FIGURES

None

8.0 EMERGENCY MANAGEMENT

The plans for coping with emergencies at the Eagle Rock Enrichment Facility are presented in the facility Emergency Plan. The Emergency Plan has been developed in accordance with 10 CFR 70.22(i) (CFR, 2008a) and 10 CFR 40.31(j) (CFR, 2008b). The Emergency Plan conforms to the guidance presented in Regulatory Guide 3.67, Standard Format and Content for Emergency Plans for Fuel Cycle and Materials Facilities, (NRC, 1992). The facility Emergency Plan also addresses the specific acceptance criteria in NUREG-1520, Standard Review Plan for the Review of a License Application for a Fuel Cycle Facility, (NRC, 2002), Chapter 8, Emergency Management.

The Emergency Plan identifies the offsite organizations that reviewed the emergency plan pursuant to the requirement in 10 CFR 70.22(i)(4) (CFR, 2008a) and 10 CFR 40.31(j)(4) (CFR, 2008b). Memoranda of Understanding with the off-site organizations are provided in the Emergency Plan.

8.1 REFERENCES

CFR, 2008a. Title 10, Code of Federal Regulations, Section 70.22, Contents of Applications, U.S. Nuclear Regulatory Commission, 2008.

CFR, 2008b. Title 10, Code of Federal Regulations, Section 40.31, Application for specific licenses, U.S. Nuclear Regulatory Commission, 2008.

NRC, 1992. Standard Format and Content of Emergency Plans for Fuel Cycle and Materials Facilities, Regulatory Guide 3.67, U.S. Nuclear Regulatory Commission, January 1992.

NRC, 2002. Standard Review Plan for the Review of a License Application for a Fuel Cycle Facility, NUREG-1520, U.S. Nuclear Regulatory Commission, March 2002.

TABLE OF CONTENTS

Page

9.0 ENVIRONMENTAL PROTECTION 9.0-1

9.1 ENVIRONMENTAL REPORT 9.1-1

9.1.1 Date of Application 9.1-1

9.1.2 Environmental Considerations 9.1-1

9.1.3 Analysis of Effects of Proposed Action and Alternatives 9.1-3

9.1.4 Status of Compliance 9.1-3

9.1.5 Adverse Information 9.1-4

9.2 ENVIRONMENTAL PROTECTION MEASURES 9.2-1

9.2.1 Radiation Safety 9.2-1

9.2.2 Effluent and Environmental Controls and Monitoring 9.2-1

9.2.3 Integrated Safety Analysis 9.2-3

9.3 REFERENCES 9.3-1

LIST OF TABLES

None

LIST OF FIGURES

None

9.0 ENVIRONMENTAL PROTECTION

AREVA Enrichment Services (AES) has prepared documents to demonstrate that its proposed environmental protective measures are adequate to protect the environment and the health and safety of the public as well as comply with the regulatory requirements imposed in 10 CFR 20 (CFR, 2008a), 10 CFR 30 (CFR, 2008b), 10 CFR 40 (CFR, 2008c), 10 CFR 51 (CFR, 2008d), and 10 CFR 70 (CFR, 2008e). The scope of information in this section of the Environmental Report (ER) is the same as previously reviewed by the Nuclear Regulatory Commission (NRC) for the National Enrichment Facility (NEF) (LES, 2005) and found acceptable by the NRC in NUREG-1827 (NRC, 2005).

Summarized below are the Safety Analysis Report (SAR) chapter section, general information category, the corresponding 10 CFR regulatory requirement, and the NUREG-1520 (NRC, 2002) section that identifies criteria that is acceptable to the NRC.

SAR Chapter Section	General Information Category	10 CFR Citation	NUREG-1520 Reference Section
9.1	**Environmental Report**	70.21(h)	9.4.3.1.1
9.1.1	Date of Application	70.21(f)	9.4.3.1.1(1)
9.1.2	Environmental Considerations	51.45(b)	9.4.3.1.1(2)
9.1.3	Analysis of Effects of Proposed Action and Alternatives	51.45(c)	9.4.3.1.1(3)
9.1.4	Status of Compliance	51.45(d)	9.4.3.1.1(4)
9.1.5	Adverse Information	51.45(e)	9.4.3.1.1(5)
9.2	**Environmental Protection Measures**	70.22(a)(8)	9.4.3.2
9.2.1	Radiation Safety	20.1101(a)	9.4.3.2.1
	ALARA Controls and Reports	20.1101(d)	9.4.3.2.1(1)-(3)
	Waste Minimization	20.1406	9.4.3.2.1(4)
9.2.2	Effluent and Environmental Controls and Monitoring	70.59(a)(1)	9.4.3.2.2
9.2.2.1	Effluent Monitoring	20.1501(a)	9.4.3.2.2(1)
9.2.2.2	Environmental Monitoring	20.1501(a)	9.4.3.2.2(2)
9.2.2.3	ISA Summary	70.65(b)	9.4.3.2.2(3)

This Safety Analysis Report (SAR) Chapter documents the potential environmental impacts associated with construction and operation of the EREF and indicates that adverse impacts are small. These impacts are outweighed by the substantial socioeconomic benefits associated with plant construction and operation. Additionally, the EREF will meet the underlying need for additional reliable and economical uranium enrichment capacity in the United States, thereby serving important energy and national security policy objectives. Accordingly, because the impacts of the proposed EREF are minimal and acceptable, and the benefits are desirable, the no-action alternative may be rejected in favor of the proposed action.

9.1 ENVIRONMENTAL REPORT

AES has prepared an Environmental Report (ER) that meets the requirements contained in 10 CFR Part 51 (CFR, 2008d), Subpart A. In particular, the ER addresses the requirements in 10 CFR 51.45(b)-(e) (CFR, 2008f) and follows the general format of NUREG-1748 (NRC, 2003).

The ER presents the proposed action, purpose of the proposed action, and applicable regulatory requirements (Chapter 1); discusses alternatives (Chapter 2); describes the facility and the affected environment (Chapter 3); and describes potential impacts of the proposed action (Chapter 4). Mitigation measures are described in Chapter 5, environmental measurements and monitoring programs in Chapter 6, a cost-benefit analysis in Chapter 7, and a summary of environmental consequences in Chapter 8. References and preparers are listed in Chapters 9 and 10, respectively.

9.1.1 Date of Application

The effective date of the ER is December 30, 2008. As required by 10 CFR 70.21(f) (CFR, 2008g), this date is at least nine months before facility construction is scheduled to begin in February, 2011.

9.1.2 Environmental Considerations

Applicant's ER adequately addresses the requirements of 10 CFR 51.45(b) (CFR, 2008f) as follows.

9.1.2.1 Description of Proposed Action

The proposed action, described in ER Section 1.2, Proposed Action, is the issuance of an NRC specific license under 10 CFR 30 (CFR, 2008b), 10 CFR 40 (CFR, 2008c) and 10 CFR 70 (CFR, 2008e) to possess and use byproduct material, source material and special nuclear material (SNM) and to construct and operate a uranium enrichment facility in Bonneville County, Idaho. The enriched uranium is intended for use primarily in domestic commercial nuclear power plants.

Significant characteristics of the facility are described in ER Chapter 1, Introduction of the Environmental Report and Chapter 3, Description of Affected Environment. Major site features, along with plant design and operating parameters are included. A discussion of how the special nuclear material (SNM), in this case uranium hexafluoride (UF_6), will be processed to produce enriched uranium-235 (^{235}U) is described in ER Section 1.2, Proposed Action, which also includes the proposed project schedule.

9.1.2.2 Purpose of Proposed Action

ER Section 1.1, Purpose and Need for the Proposed Action, demonstrates the need for the facility. The demonstration provides the:

- Quantities of SNM used for domestic benefit
- A projection of domestic and foreign requirements for services
- Alternative sources of supply for AES' proposed services.

ER Section 1.1, Purpose and Need for the Proposed Action, also discusses if delay of the facility occurs, the effects to the nation's energy program or AES's business such as loss of contracts.

9.1.2.3 Description of the Affected Environment

Chapter 3 of the ER contains detailed descriptions of the affected environment. The chapter provides a baseline characterization of the site and its environs prior to any disturbances associated with construction or operation of the facility. The following topics and corresponding ER chapter section include:

- Site location (including longitude and latitude) and facility layout (1.2)
- Regional demography (3.10) and land use (3.1)
- Socioeconomic information (3.10), including low-income and minority populations within 130 km^2 (50 mi^2) as directed by NUREG-1748 (4.11)
- Regional historic (3.8), archeological (3.8.), architectural (3.9), scenic (3.9), cultural (3.8), and natural landmarks (3.9)
- Local meteorology and air quality (3.6)
- Local surface water and ground water hydrology (3.4)
- Regional geology and seismology (3.3)
- Local terrestrial and aquatic ecology (3.5).

The baseline descriptions presented are from the most current information available. It was gathered from federal, state, and county sources along with on-site data. Therefore, the information represents both seasonal and long-term environmental trends.

9.1.2.4 Discussion of Considerations

Three ER chapters discuss the potential environmental impacts relating to the proposed action. Chapter 4 details environmental and socioeconomic effects due to site preparation and facility construction and operation. Chapter 2 describes alternatives to the proposed action, including siting and designs. Chapter 7 provides a discussion of the costs and benefits for each alternative as well as the relationship between short-term use and long-term productivity of the environment, and resources committed. In addition, Chapter 8 provides a summary of environmental consequences from all actions. The associated regulatory criteria and corresponding ER section are as follows:

A. Impact of the Proposed Action on the Environment

- Effects of site preparation and construction on land and water use (4.1 and 4.4)
- Effects of facility operation on human population (including consideration of occupation and public radiation exposure) and important biota (4.10, 4.11, and 4.12)
- Any irreversible commitments of resources because of site preparation and facility construction and operation, such as destruction of wildlife habitat, removal of land from agriculture, and diversion of electrical power (4.1, 7.0, and 8.2)
- Plans and policies regarding decommissioning and dismantling at the end of the facility's life (8.9)

- Environmental effects of the transportation of radioactive materials to and from the site (4.2)
- Environmental effects of accidents (4.12)
- Impacts on air and water quality (4.6 and 4.4)
- Impacts on cultural and historic resources (4.8).

B. Adverse Environmental Effects

Three chapters in the ER discuss adverse environmental effects. Refer to Section 9.1.5 below for additional detail on the associated ER chapters and topics.

C. Alternatives to the Proposed Action

ER Chapter 2 provides a complete description of alternatives to the proposed action. Included are the no action alternative scenarios as well as the siting criteria and technical design requirements in sufficient detail to allow a fair and reasonable comparison between the alternatives.

D. Relationship between Short- and Long-term Productivity

ER Chapter 7, the cost-benefit analysis, included the consideration of the short-term uses and productivity of the site during the active life of the facility. No adverse impacts on the long-term productivity of the environment after decommissioning of the facility have been identified. The European experience at the Almelo enrichment plant demonstrates that a centrifuge technology site can be returned to a greenfield site for use without restriction.

E. Irreversible and Irretrievable Commitments of Resources

Irreversible environmental commitments and irretrievable material resources also are included in the cost-benefit analysis in ER Chapter 7. They are part of the capital costs associated with the land and facility and operating and maintenance costs. No significant commitments are involved with the proposed action. The site should be available for unrestricted use following decommissioning. Some components may be reused or sold as scrap during the plant life or following decommissioning.

9.1.3 Analysis of Effects of Proposed Action and Alternatives

ER Chapter 2 discusses the analysis of effects of the proposed action and alternatives in accordance with 10 CFR 51.45(c) (CFR, 2008f). The analysis considers and balances the environmental effects of the proposed action and alternatives available to reduce or avoid both environmental and socioeconomic effects and other benefits of the proposed action.

9.1.4 Status of Compliance

ER Section 1.3 summarizes, as required in 10 CFR 51.45(d) (CFR, 2008f), the applicability of environmental regulatory requirements, permits, licenses, or approvals as well as the current status of each on the effective date of the ER.

Many federal laws and regulations apply to the facility during site assessment, construction, and operation. Some of these laws require permits from, consultations with, or approvals by, other governing or regulatory agencies. Some apply only during certain phases of facility development, rather than the entire life of the facility. Federal statutes and regulations (non-nuclear) have been reviewed to determine their applicability to the facility site assessment, construction, and operation.

9.1.5 Adverse Information

In accordance with 10 CFR 51.45(e) (CFR, 2008f), various sections throughout the ER discuss adverse environmental effects. In particular, Chapter 4 details environmental and socioeconomic effects due to site preparation and facility construction and operation. Chapter 2 compares potential impacts from alternatives. Lastly, Chapter 8 provides a summary of environmental consequences from all actions.

9.2 ENVIRONMENTAL PROTECTION MEASURES

AES is committed to protecting the public, plant workers, and the environment from the harmful effects of ionizing radiation due to plant operation. Accordingly, AES is firmly committed to the "As Low As Reasonably Achievable," (ALARA) philosophy for all operations involving source, byproduct, and special nuclear material. This commitment is reflected in written procedures and instructions for operations involving potential exposures of personnel to radiation (both internal and external hazards) and the facility design. Written procedures for effluent monitoring address the need for periodic (monthly) dose assessment projections to members of the public to ensure that potential radiation exposures are kept ALARA (i.e., not in excess of 0.1 mSv/yr (10 mrem/yr)) in accordance with 10 CFR 20.1101(d).

Parts of AES's environmental protective measures are described in the ER. In particular, Chapter 4 discusses the anticipated results of the radiation protection program with regard to ALARA goals and waste minimization. Chapter 6 discusses the environmental controls and monitoring program.

A detailed description of AES' radiation protection program is included separately in this License Application as Safety Analysis Report (SAR) Chapter 4. Similarly, AES's provisions for a qualified and trained staff, which also is part of the environmental protection measures required, are established by the personnel qualifications of the management and supervisory staff as well as formal training for facility employees, as described in SAR Chapter 2, Organization and Administration.

9.2.1 Radiation Safety

The four acceptance criteria that describe the facility radiation safety program are divided between two License Application documents. SAR Chapter 4 describes:

- Radiological (ALARA) goals for effluent control
- ALARA reviews and reports to management.

ER Chapter 4, Environmental Impacts, addresses:

- Effluent controls to maintain public doses ALARA, and
- Waste minimization.

In particular, ER Section 4.12 describes public and occupational health effects from both non-radiological and radiological sources. This section specifically addresses calculated total effective dose equivalent to an average member of critical groups or calculated average annual concentration of radioactive material in gaseous and liquid effluent to maintain compliance with 10 CFR 20 (CFR, 2008a).

ER Section 4.13 contains a discussion on facility waste minimization that identifies process features and systems to reduce or eliminate waste. It also describes methods to minimize the volume of waste.

9.2.2 Effluent and Environmental Controls and Monitoring

AES has designed an environmental monitoring program to provide comprehensive data to monitor the facility's impact on the environment. The preoperational program will focus on collecting data to establish baseline information useful in evaluating potential changes in

environmental conditions caused by facility operation. The preoperational program will be initiated at least two years prior to facility operation.

The operational program will monitor to ensure facility emissions are maintained ALARA. Sampling focuses on locations within the site perimeter, but may also include distant locations as control sites. Sampling locations have been determined based on NRC guidance found in the document, "Off-site Dose Calculation Manual Guidance: Standard Radiological Effluent Controls for Boiling Water Reactors" (NRC, 1991), meteorological information, and current land use. The sampling locations may be subject to change as determined from the results of periodic review of land use.

ER Chapter 6 describes the environmental measurement and monitoring programs as they apply to preoperation (baseline), operation, and decommissioning conditions for both the proposed action and each alternative.

9.2.2.1 Effluent Monitoring

ER Section 6.1, Radiological Monitoring, presents information relating to the facility radiological monitoring program. This section describes the location and characteristics of radiation sources and radioactive effluent. It also describes the various elements of the monitoring program, including:

- Number and location of sample collection points
- Measuring devices used
- Pathway sampled or measured
- Collection frequency and duration
- Method and frequency of analysis, including lower limits of detection.

Based on recorded plant effluent data, dose projections to members of the public will be performed monthly to ensure that the annual dose to members of the public does not exceed the ALARA constraint of 0.1 mSv/yr (10 mrem/yr) from air emissions and radioactive materials. If the monthly dose impact assessment indicates a trend in effluent releases that, if not corrected, could cause the ALARA constraint to be exceeded, appropriate corrective action will be initiated to reduce the discharges to assure that subsequent releases will be in compliance with the annual dose constraint. In addition, an evaluation of the need for increased sampling will be performed. Corrective actions may include, for example, change out of Separation Building or Technical Support Building Gaseous Effluent Vent System filters.

Lastly, Section 6.1 of the ER justifies the choice of sample locations, analyses, frequencies, durations, and lower limits of detection.

9.2.2.2 Environmental Monitoring

ER Section 6.0, Environmental Measurements and Monitoring Programs, also includes information relating to the facility environmental monitoring program. The information presented is the same as that included in the effluent monitoring program, i.e., number and location of sample collection points, etc.

9.2.3 Integrated Safety Analysis

AES has prepared an integrated safety analysis (ISA) in accordance with 10 CFR 70.60 (CFR, 2008h). The ISA:

- Provides a complete list of the accident sequences that if uncontrolled could result in radiological and non-radiological releases to the environment with intermediate or high consequences.
- Provides reasonable estimates for the likelihood and consequences of each accident identified.
- Applies acceptable methods to estimate environmental effects that may result from accidental releases.

The ISA also

- Identifies adequate engineering and/or administrative controls for each accident sequence of environmental significance
- Assures adequate levels are afforded so those items relied on for safety (IROFS) will satisfactorily perform their safety functions.

The ISA demonstrates that the facility and its operations have adequate engineering and/or administrative controls in place to prevent or mitigate high and intermediate consequences from the accident sequences identified and analyzed.

9.3 REFERENCES

CFR, 2008a. Title 10, Code of Federal Regulations, Part 20, Standards for Protection Against Radiation, 2008.

CFR, 2008b. Title 10, Code of Federal Regulations, Part 30, Rules of General Applicability to Domestic Licensing of Byproduct Material, 2008.

CFR, 2008c. Title 10, Code of Federal Regulations, Part 40, Domestic Licensing of Source Material, 2008.

CFR, 2008d. Title 10, Code of Federal Regulations, Part 51, Environmental Protection Regulations for Domestic Licensing and Related Regulatory Functions, 2008.

CFR, 2008e. Title 10, Code of Federal Regulations, Part 70, Domestic Licensing of Special Nuclear Material, 2008.

CFR, 2008f. Title 10, Code of Federal Regulations, Section 51.45, Environmental report, 2008.

CFR, 2008g. Title 10, Code of Federal Regulations, Section 70.21, Filing, 2008

CFR, 2008h. Title 10, Code of Federal Regulations, Section 70.60, Applicability, 2008.

LES, 2005. National Enrichment Facility Safety Analysis Report, Revision 7, June 2005.

NRC, 1991. Off-site Dose Calculation Manual Guidance: Standard Radiological Effluent Controls for Boiling Water Reactors, NUREG-1302, U.S. Nuclear Regulatory Commission, 1991.

NRC, 2003. Environmental Review Guidance for Licensing Actions Associated with NMSS Programs, Final Report, NUREG-1748, U.S. Nuclear Regulatory Commission, August 2003.

NRC, 2002. Standard Review Plan for the Review of a License Application for a Fuel Cycle Facility, NUREG-1520, U.S. Nuclear Regulatory Commission, March 2002.

NRC, 2005. Safety Evaluation Report for the National Enrichment Facility in Lea County, New Mexico; Docket 70-3103; Louisiana Energy Services, June 2005.

TABLE OF CONTENTS

		Page
10.0	DECOMMISSIONING	10.0-1
10.1	SITE-SPECIFIC COST ESTIMATE	10.1-1
10.1.1	Cost Estimate Structure	10.1-1
10.1.2	Facility Description	10.1-1
10.1.3	Decommissioning Cost Estimate	10.1-1
10.1.4	Decommissioning Strategy	10.1-2
10.1.5	Decommissioning Design Features	10.1-5
10.1.6	Decommissioning Process	10.1-8
10.1.7	Decontamination Facilities	10.1-13
10.2	FINANCIAL ASSURANCE MECHANISM	10.2-1
10.2.1	Decommissioning Funding Mechanism	10.2-1
10.2.2	Adjusting Decommissioning Costs and Funding	10.2-2
10.2.3	Recordkeeping Plans Related to Decommissioning Funding	10.2-3
10.3	TAILS DISPOSITION	10.3-1
10.4	REFERENCES	10.4-1

Appendix 10A	Irrevocable Standby Letter of Credit
Appendix 10B	Standby Trust Agreement
Appendix 10C	Standby Trust Agreement Schedules
Appendix 10D	Specimen Certificate of Events
Appendix 10E	Specimen Certificate of Resolution
Appendix 10F	Letter of Acknowlegement

LIST OF TABLES

Table 10.1-1A Number and Dimensions of Facility Components
Table 10.1-1B Number and Dimensions of Facility Components
Table 10.1-1C Number and Dimensions of Facility Components
Table 10.1-1D Number and Dimensions of Facility Components
Table 10.1-1E Number and Dimensions of Facility Components
Table 10.1-1F Number and Dimensions of Facility Components
Table 10.1-2 Planning and Preparation
Table 10.1-3 Decontamination or Dismantling of Radioactive Components
Table 10.1-4 Restoration of Contaminated Areas on Facility Grounds
Table 10.1-5 Final Radiation Survey
Table 10.1-6 Site Stabilization and Long-Term Surveillance
Table 10.1-7 Total Work Days by Labor Category
Table 10.1-8 Worker Unit Cost Schedule
Table 10.1-9 Total Labor Cost by Major Decommissioning Task
Table 10.1-10 Packaging, Shipping, and Disposal of Radioactive Wastes
Table 10.1-11 Equipment and Supply Costs
Table 10.1-12 Laboratory Costs
Table 10.1-13 Period Dependent Costs
Table 10.1-14 Total Decommissioning Costs
Table 10.1-15 Unit Cost Comparison
Table 10.1-16 Cost Estimate for Decommissioning of the First Separations Building Module
Table 10.3-1 Tails Production and Buildup During 30-Year License Period

LIST OF FIGURES

Figure 10.1-1 Conceptual Decommissioning Schedule

10.0 DECOMMISSIONING

This chapter presents the AREVA Enrichment Services, LLC (AES) Eagle Rock Enrichment Facility (EREF) Decommissioning Funding Plan. The Decommissioning Funding Plan has been developed following the guidance provided in NUREG-1757 (NRC, 2006). This Decommissioning Funding Plan is similar to the decommissioning funding plan for the National Enrichment Facility (NEF) approved by the NRC in NUREG-1827 (NRC, 2005). The key differences between the EREF and the NEF with respect to decommissioning of the facility and the funding plan, apart from the specifics of dismantling costs due to different facility arrangements are:

- AES will utilize a Letter of Credit to provide reasonable assurance of decommissioning funding rather than a surety bond. Refer to Section 10.2.1, Decommissioning Funding Mechanism.
- The funding assurance for disposition of the depleted uranium byproduct will be based on the costs associated with transporting the tails to the Department of Energy facility for deconversion and disposal under construction at Paducah, Kentucky. Refer to ER Section 4.13.3.6, Cost Associated with Depleted UF_6 Deconversion and Disposal, and SAR Section 10.3, Tails Disposition.
- EREF costs are in 2007 dollars.
- Although no decision has been made regarding selection of a waste disposal facility, waste disposal costs for the EREF are based on the actual costs for disposal at the U.S. Ecology facility near Richland, Washington. The EREF disposal costs are calculated based on weight, volume, quantity of disposal containers, and number of shipments. The NEF costs were based on the cost of disposal at the Envirocare facility near Clive, Utah. The NEF cost is based solely on the volume of waste. As a result of the difference in disposal facility and pricing method, the estimated EREF cost for disposal is considerably greater than that estimated by NEF.

AES commits to decontaminate and decommission the enrichment facility and the site at the end of its operation so that the facility and grounds can be released for unrestricted use. The Decommissioning Funding Plan will be reviewed and updated as necessary at least once every three years starting from the time of the start of operations. In addition to this triennial update, AES has committed to supplemental updates as described in the request for exemption in SAR Section 1.2.5 in order to ensure adequate financial assurance on an incremental basis. Prior to facility decommissioning, a Decommissioning Plan will be prepared in accordance with 10 CFR 70.38 (CFR, 2008a) and submitted to the NRC for approval.

This chapter fulfills the applicable provisions of NUREG-1757 (NRC, 2006) through submittal of information in tabular form as suggested by the NUREG. The information provided in this chapter, the corresponding regulatory requirement and the NRC acceptance criteria from NUREG-1520 (NRC, 2002a), Chapter 10 are summarized below.

SAR Chapter/ Section	Information Category and Requirement	10 CFR Citation	NUREG-1520 Chapter 10 Reference
10.0	Decommissioning: A decommissioning plan must be submitted if required by license condition or if the procedures and activities necessary to carry out decommissioning of the site or separate building or outdoor area have not been previously approved by the Commission and these procedures could increase potential health and safety impacts to workers or to the public.	10 CFR 70.38	10.4.1
10.1, 10.2	Site Specific Cost Estimate: Each decommissioning funding plan must contain a cost estimate for decommissioning and a description of the method of assuring funds for decommissioning from paragraph (f) of this section, including means for adjusting cost estimates and associated funding levels periodically over the life of the facility.	10 CFR 70.25	10.4.1
10.1.4	Decommissioning Strategy: A site will be considered acceptable for unrestricted use if the residual radioactivity that is distinguishable from background radiation results in a TEDE to an average member of the critical group that does not exceed 25 mrem (0.25 mSv) per year	10 CFR 20.1402	10.4.1
10.1.5.2	Minimization of contamination: Applicants for licenses shall describe in the application how facility design and procedures for operation will minimize, to the extent practicable, contamination of the facility and the environment, facilitate eventual decommissioning, and minimize, to the extent practicable, the generation of radioactive waste.	10 CFR 20.1406	10.4.1
10.2	Financial Assurance Mechanism: certain applications for specific licenses filed under this part must contain a proposed decommissioning funding plan or a certification of financial assurance for decommissioning	10 CFR 70.22 (a)(9)	10.4.1
10.1.5.8	Record Keeping: commitment to maintain a list of “Restricted Areas” (as defined in the CFR citation) in the EREF Records management system.	10 CFR 20.1003	N/A

SAR Chapter/ Section	Information Category and Requirement	10 CFR Citation	NUREG-1520 Chapter 10 Reference
10.1.5.8	Record Keeping: maintain/retain records of the disposal of licensed materials made under §§ 20.2002 (CFR, 2008f), 20.2003 (CFR 2008k), 20.2004 (CFR 2008l), 20.2005 (CFR 2008m), 10 CFR part 61 (CFR 2008n) land disposal by burial in soil.	10 CFR 20.2108	N/A
10.1.5.8	Record Keeping: maintain records of all areas outside of Restricted Areas that contain material such that, if the license expired, the licensee would be required to decontaminate the area to meet the criteria for decommissioning required by 10 CFR 20, Subpart E (CFR, 2008o) or apply for approval for disposal under 10 CFR 20.2002 (CFR, 2008f).	10CFR 20 Subpart E, 10 CFR 20.2002	N/A
10.1.6.7	Disposal: dispose Confidential and Secret Restricted Data components and documents;	10 CFR 95	N/A
10.2.1	Decommission Funding Mechanism; financial assurance for decommissioning must be provided by one or more of the following methods (included method chosen by AES).	10 CFR 40.36 10 CFR 70.25	N/A

10.1 SITE-SPECIFIC COST ESTIMATE

10.1.1 Cost Estimate Structure

The decommissioning cost estimate is comprised of three basic parts that include:

- A facility description
- The estimated costs (including labor costs, non-labor costs, and a contingency factor)
- Key assumptions.

10.1.2 Facility Description

The Eagle Rock Enrichment Facility (EREF) is fully described in other sections of this License Application and the EREF Integrated Safety Analysis Summary. Information relating to the following topics can be found in the referenced chapters listed below:

A general description of the facility and plant processes is presented in Chapter 1, General Information. A detailed description of the facility and plant processes is presented in the EREF Integrated Safety Analysis Summary.

A description of the specific quantities and types of licensed materials used at the facility is provided in Chapter 1, Section 1.2, Institutional Information.

A general description of how licensed materials are used at the facility is provided in Chapter 1, General Information.

10.1.3 Decommissioning Cost Estimate

10.1.3.1 Summary of Costs

The decommissioning cost estimate for the EREF including decommissioning, tails disposal, and contingency, is approximately $3,523 million (2007 dollars). The decommissioning cost estimate and supporting information are presented in Tables 10.1-1A through 10.1-15, consistent with the applicable provisions of NUREG-1757, NMSS Decommissioning Standard Review Plan (NRC, 2006).

Approximately 97% of the decommissioning costs (except tails disposition costs) for the EREF are attributed to the dismantling, decontamination, processing, and disposal of centrifuges and other equipment in the Separations Building Modules, which are considered classified. Given the classified nature of these buildings, the data presented in the Tables at the end of this chapter has been structured to meet the applicable NUREG-1757 (NRC, 2006)) recommendations, to the extent practicable. However, specific information such as numbers of components and unit rates has been intentionally excluded to protect the classified nature of the data.

A decommissioning cost estimate for the classified portion of the EREF 3.3M SWU facility was developed by the centrifuge supplier, ETC, and was submitted to the NRC under separate cover on December 30, 2008. This cost estimate, factored as discussed in Section 10.1.4, also serves as the basis for the decommissioning cost estimate for a 6.6M SWU facility.

The remaining 3% of the decommissioning costs are for the remaining systems and components in other buildings. The cost data for these systems has also been structured to meet the applicable NUREG-1757 (NRC, 2006)) recommendations.

The decommissioning project schedule is presented in Figure 10.1-1, Eagle Rock Enrichment Facility - Conceptual Decommissioning Schedule. Dismantling and decontamination of the equipment in the four Separations Building Modules will be conducted sequentially over an eight year time frame. Each Separations Building Module will be decommissioned over a 4.5 year period; 3 years are required to dismantle, declassify and decontaminate the equipment and 1.5 years are required to decontaminate the structure. Termination of Separations Building Module 4operations will mark the end of uranium enrichment operations at the EREF. Decommissioning of the remaining plant systems and buildings will begin after Separations Building Module 4 operations have been permanently terminated.

10.1.3.2 Major Assumptions

Key assumptions underlying the decommissioning cost estimate are listed below:

- Inventories of materials and wastes at the time of decommissioning will be in amounts that are consistent with routine plant operating conditions over time with the exception of the tails inventory as explained below.
- Costs are not included for the removal or disposal of non-radioactive structures and materials beyond that necessary to terminate the NRC license.
- Credit is not taken for any salvage value that might be realized from the sale of potential assets (e.g., recovered materials or decontaminated equipment) during or after decommissioning.
- Decommissioning activities will be performed in accordance with current day regulatory requirements.
- AES will be the Decommissioning Operations Contractor (DOC) for all decommissioning operations. However, in the event that AES is not able to fulfill this role, an adjustment to account for use of a third party for performing decommissioning operations is provided in Table 10.1-14, Total Decommissioning Costs. The ETC decommissioning scope is excluded from this adjustment as discussed in Section 10.1.4.
- Decommissioning costs and tails disposition costs are presented in 2007 dollars. Some decommissioning costs were provided by ETC in euros (€). A rate of 0.714 € to $1 (US) is used to convert 2007 € to 2007 $ for those costs.

10.1.4 Decommissioning Strategy

The plan for decommissioning is to promptly decontaminate or remove all materials from the site which prevent release of the facility and site for unrestricted use. This approach, referred to in the industry as DECON (i.e., immediate dismantlement), avoids long-term storage and monitoring of wastes on site. The type and volume of wastes produced at the EREF do not warrant delays in waste removal normally associated with the SAFSTOR (i.e., deferred dismantlement) option.

At the end of useful plant life, the EREF will be decommissioned such that the site and remaining facilities may be released for unrestricted use as defined in 10 CFR 20.1402 (CFR, 2008b). Enrichment equipment will be removed; only building shells and the site infrastructure will remain. All remaining facilities will be decontaminated where needed to acceptable levels for unrestricted use. Confidential and Secret Restricted Data material, components, and documents will be destroyed and disposed of in accordance with the facility Standard Practice Procedures Plan for the protection of classified matter.

Depleted UF_6 (tails), will be removed from the site prior to and during decommissioning. As described in Section 10.3, the tails will be transported to the Department of Energy (DOE) facilities at Portsmouth, Ohio or Paducah, Kentucky for conversion and disposal in accordance with regulatory requirements. Radioactive wastes will be disposed of in licensed low-level radioactive waste disposal sites. Hazardous wastes will be treated or disposed of in licensed hazardous waste facilities. Neither tails conversion, nor disposal of radioactive or hazardous material will occur at the plant site, but at licensed facilities located elsewhere.

Following decommissioning, no part of the facilities or site will remain restricted to any specific type of use.

AES has compared the EREF to the National Enrichment Facility (NEF) in Lea County, New Mexico and fully expects that the decommissioning costs for the EREF are comparable to the decommissioning costs for the NEF, accounting for facility enrichment capacity and minor differences in infrastructure. The supplier of the centrifuges and associated equipment for the EREF i(ETC) has supplied a cost estimate to decommission the centrifuges and associated classified equipment of a 3.3M SWU facility. Costs and quantities associated with decommissioning of a 3.3M SWU facility have been increased by factors based on the particular item to account for the increase in facility capacity to 6.6M SWU. The factors are provided in the appropriate tables associated with this chapter. Decommissioning and decontamination of these components, which is classified, represents approximately 97% of the costs for decommissioning of the EREF.

ETC has decommissioning experience related to the E21 Enrichment Plant (at Capenhurst, UK) for early generations of block-mounted centrifuges and the SP3 Separation Plant at Almelo, Netherlands for early generation centrifuges. ETC has maintained a decommissioning cost model based on costs and methodologies of work previously performed.

Due to the continued high performance of the current generation of gas centrifuges, no site has yet needed, or is likely in the short term, to decommission a plant containing centrifuge machines similar to those proposed for the EREF. ETC has experience in taking both intact and crashed centrifuges from these plants for autopsy and from refurbishment campaigns for its customers. Centrifuges have been manually dismantled, decontaminated and declassified by ETC-D in Jülich, Germany, with the resulting parts safely disposed of – this includes both TC12 and later generation development centrifuges. Work has been performed by ETC scaling the manual methodologies used in Jülich into a semi-automated line using a design concept based on that currently deployed on the SP3 decommissioning line. A cost estimate for this concept was included in the decommissioning cost model.

The remaining structures, systems, and components (SSCs) to be decommissioned account for approximately 3% of the total cost for decommissioning the facility. AES has developed the costs for decommissioning of these SSCs assuming that the costs are approximately the same as for the NEF, accounting for facility enrichment capacity and minor differences in infrastructure. This is based on the following:

- The overall design and quantities of the SSCs at the two facilities (EREF and NEF) that are to be decommissioned are similar when differences in capacity and infrastructure are taken into account.
- The practices and procedures that will be used to decommission and decontaminate the SSCs at EREF will be similar to those to be used at NEF.

Therefore, the decommissioning and decontamination quantities and costs developed for the NEF for non-classified structures, systems, and components are applicable to the EREF on both overall and unit bases, taking into account differences in capacity and minor differences in

facility infrastructure. Where differences do exist, for example more or less floor area, the NEF costs are adjusted as appropriate for the conditions at the EREF.

NRC requested that LES provide a comparison of NEF decommissioning unit costs with the unit costs provided in NUREG/CR-6477 (NRC, 2002b). LES provided the comparison (LES, 2005) and determined that the NEF unit costs and the NUREG unit costs were comparable. Since the EREF decommissioning unit costs are based on NEF decommissioning costs, it can be concluded that the EREF decommissioning unit costs are also comparable to the unit costs computed from NUREG/CR-6477 (NRC, 2002b). Refer to Table 10.1-15 for this unit cost comparison.

Disposal costs for the low level radioactive waste (LLRW) generated during decommissioning may differ between the EREF and the NEF. This is a result of assuming disposal at different LLRW disposal facilities. NEF waste is assumed to be disposed of at the Envirocare Facility in Clive, Utah. However, the state of Idaho is a member of the Northwest Interstate Compact (NWIC) on Low Level Radioactive Waste. Therefore, for the purposes of this analysis, LLRW generated at the EREF during decommissioning is assumed to be disposed of at the U.S. Ecology Washington Low-Level Radioactive Waste site located near Richland, Washington. The unit disposal costs in Table 10.1-10 are based on the current rates for compact members at the US Ecology site.

The US Ecology rates include per container and per shipment charges as well as charges based on volume whereas the NEF estimated costs are based on volume charges only. The EREF disposal costs are based on shipping the LLRW in Sea Land and B25 containers. This is consistent with normal LLRW packaging at both operating and decommissioning nuclear power plants and these containers are acceptable to the disposal facility. Further, the use of Sea Land and B25 containers is in keeping with ALARA principles when compared to use of smaller containers such as 55-gallon (208 liter) drums. The use of the larger containers reduces the man-hours associated with processing, packaging, and shipping the LLRW, resulting in lower personnel doses.

As stated in Section 10.1.3.2, above, AES will be the Decommissioning Operations Contractor (DOC) for all decommissioning operations. However, to provide a contingency if AES is not able to perform this role, Table 10.1.14 includes the additional costs if a third party were to act as the DOC. The third party contractor cost for decommissioning operations associated with planning and preparation, decontamination and dismantling of radioactive facility components, restoration of contaminated areas on facility grounds, and the final radiation survey includes an overhead rate on direct staff labor of 110%, plus 15% profit on labor and its overheads. Costs associated with the decontamination, dismantlement, and declassification of classified components are excluded from application of these overhead and profit factors because: (1) ETC is an independent contractor who, by definition, is a “third party DOC” that will perform this work; (2) the costs associated with this work already include the overhead and profits associated with a third party (ETC in this case) performing this work; and (3) due to the nature of this work, only ETC will perform this work.

The estimate for third party contractor cost was derived as follows:

- The total workdays for each labor category associated with planning and preparation, decontamination and dismantling of radioactive facility components and the final radiation survey in Table 10.1-7 were determined. For each labor category, the total labor cost was then determined by multiplying the total workdays by the associated labor rates from Table 10.1-8. As discussed above, labor costs associated with the decontamination, dismantlement, and declassification of classified components are excluded.

- For each labor category associated with planning and preparation, decontamination and dismantling of radioactive facility components, and the final radiation survey, the total cost including the overhead rate of direct staff labor was then determined by adding 110% to the total labor cost, i.e., multiplying the total labor cost by (1+1.10).
- Multiplying this total cost, including the 110% overhead rate on staff labor, by 1.15, to allow for a 15% profit on labor and overheads, provides the total third party cost.
- This total third party cost was then used to determine the adjustment to SAR Table 10.1-14 for the Cost of Third Party Use associated with planning and preparation, decontamination and dismantling of radioactive facility components, and the final radiation survey. This adjustment was determined by subtracting the non-third party use costs for planning and preparation, decontamination and dismantling of radioactive facility components, and the final radiation survey provided in SAR Table 10.1-14 from the total third party cost.

Financial arrangements are made to cover all costs required for returning the site to unrestricted use. Updates on cost and funding will be provided periodically and will include appropriate treatment for any replacement equipment. A detailed Decommissioning Plan will be submitted at a later date in accordance with 10 CFR 70.38 (CFR, 2008a).

The remaining subsections describe decommissioning plans and funding arrangements, and provide details of the decontamination aspects of the program. This information was developed in connection with the decommissioning cost estimate. Specific elements of the planning may change with the submittal of the decommissioning plan required at the time of license termination.

10.1.5 Decommissioning Design Features

10.1.5.1 Overview

Decommissioning planning begins with ensuring design features are incorporated into the plant's initial design that will simplify eventual dismantling and decontamination. The plans are implemented through proper management and health and safety programs. Decommissioning policies address radioactive waste management, physical security, and material control and accounting.

Major features incorporated into the facility design that facilitate decontamination and decommissioning are described below.

10.1.5.2 Radioactive Contamination Control

The following features primarily serve to minimize the spread of radioactive contamination during operation, and therefore simplify eventual plant decommissioning. As a result, worker exposure to radiation and radioactive waste volumes are minimized as well.

- Certain activities during normal operation are expected to result in surface and airborne radioactive contamination. Specially designed rooms are provided for these activities to preclude contamination spread. These rooms are isolated from other areas and are provided with ventilation and filtration. The Ventilated Room (BSPB), Chemical Trap Workshop (TSB), Mobile Unit Disassembly and Reassembly Room (TSB), Valve and Pump Dismantlement Workshop (TSB), the Decontamination Workshop (TSB), Maintenance Facility (TSB), and the Centrifuge Test and Post Mortem Facility (CAB) meet these specific design requirements.

- All areas of the plant are sectioned off into Unrestricted and Restricted Areas. Restricted Areas limit access for the purpose of protecting individuals against undue risks from exposure to radiation and radioactive materials. Radiation Areas and Airborne Contamination Areas have additional controls to inform workers of the potential hazard in the area and to help prevent the spread of contamination. All procedures for these areas fall under the Radiation Protection Program, and serve to minimize the spread of contamination and simplify the eventual decommissioning.
- Non-radioactive process equipment and systems are minimized in locations subject to potential contamination. This limits the size of the Restricted Areas and limits the activities occurring inside these areas.
- Local air filtration is provided for areas with potential airborne contamination to preclude its spread. Fume cupboards (hoods) filter contaminated air in these areas.
- Curbing, pits, or other barriers are provided around tanks and components that contain liquid radioactive wastes. These serve to control the spread of contamination in case of a spill.
- Discharges from the facility to surface or groundwater will meet standards for storm water and treated domestic sanitary waste water. No liquid radiological discharges are anticipated.

10.1.5.3 Worker Exposure and Waste Volume Control

The following features primarily serve to minimize worker exposure to radiation and minimize radioactive waste volumes during decontamination activities. As a result, the spread of contamination is minimized as well.

- During construction, a washable epoxy coating is applied to floors and walls that might be radioactively contaminated during operation. The coating will serve to lower waste volumes during decontamination and simplify the decontamination process. The coating is applied to floors and walls that might be radioactively contaminated during operation that are located in the Restricted Areas.
- Sealed, nonporous pipe insulation is used in areas likely to be contaminated. This will reduce waste volume during decommissioning.
- Ample access is provided for efficient equipment dismantling and removal of equipment that may be contaminated. This minimizes the time of worker exposure.
- Tanks are provided with accesses for entry and decontamination. Design provisions are also made to allow complete draining of the wastes contained in the tanks.
- Connections in the process systems provided for required operation and maintenance allow for thorough purging at plant shutdown. This will remove a significant portion of radioactive contamination prior to disassembly.
- Design drawings, produced for all areas of the plant, will simplify the planning and implementing of decontamination procedures. This in turn will shorten the durations that workers are exposed to radiation.
- Worker access to contaminated areas is controlled to assure that workers wear proper protective equipment and limit their time in the areas.

10.1.5.4 Management Organization

An appropriate organizational strategy will be developed to support the phased decommissioning schedule discussed in Section 10.1.3.1, Summary of Costs. The organizational strategy will ensure that adequate numbers of experienced and knowledgeable personnel are available to perform the technical and administrative tasks required to decommission the facility.

AES intends to be the prime Decommissioning Operations Contractor (DOC) responsible for decommissioning the EREF. In this capacity, AES will have direct control and oversight over all decommissioning activities. AES also plans to secure contract services to supplement its capabilities as necessary.

Management of the decommissioning program will assure that proper training and procedures are implemented to assure worker health and safety. Programs and procedures, based on already existing operational procedures, will focus heavily on minimizing waste volumes and worker exposure to hazardous and radioactive materials. Qualified contractors assisting with decommissioning will likewise be subject to facility training requirements and procedural controls.

10.1.5.5 Health and Safety

As with normal operation, the policy during decommissioning shall be to keep individual and collective occupational radiation exposure as low as reasonably achievable (ALARA). A health physics program will identify and control sources of radiation, establish worker protection requirements, and direct the use of survey and monitoring instruments.

10.1.5.6 Waste Management

Radioactive and hazardous wastes produced during decommissioning will be collected, handled, and disposed of in accordance with all regulations applicable to the facility at the time of decommissioning. Generally, procedures will be similar to those described for wastes produced during normal operation. These wastes will ultimately be disposed of in licensed radioactive or hazardous waste disposal facilities located elsewhere. Non-hazardous and non-radioactive wastes will be disposed of consistent with good industrial practice, and in accordance with applicable regulations.

10.1.5.7 Security/Material Control

Requirements for physical security and for material control and accounting will be maintained as required during decommissioning in a manner similar to the programs in force during operation. The AES plan for completion of decommissioning, submitted near the end of plant life, will provide a description of any necessary revisions to these programs.

10.1.5.8 Recordkeeping

Records important for safe and effective decommissioning of the facility will be stored in the EREF Records Management System until the site is released for unrestricted use. Information maintained in these records includes:

1. Records of spills or other unusual occurrences involving the spread of contamination in and around the facility, equipment, or site. These records may be limited to instances when

contamination remains after any cleanup procedures or when there is reasonable likelihood that contaminants may have spread to inaccessible areas as in the case of possible seepage into porous materials such as concrete. These records will include any known information on identification of involved nuclides, quantities, forms, and concentrations.

2. As-built drawings and modifications of structures and equipment in restricted areas where radioactive materials are used and/or stored and of locations of possible inaccessible contamination such as buried pipes which may be subject to contamination. Required drawings will be referenced as necessary, although each relevant document will not be indexed individually. If drawings are not available, appropriate records of available information concerning these areas and locations will be substituted.
3. Except for areas containing only sealed sources, a list contained in a single document and updated every two years, of the following:
   i. All areas designated and formerly designated as Restricted Areas as defined under 10 CFR 20.1003; (CFR, 2008c)
   ii. All areas outside of Restricted Areas that require documentation specified in item 1 above;
   iii. All areas outside of Restricted Areas where current and previous wastes have been buried as documented under 10 CFR 20.2108 (CFR, 2008d); and
   iv. All areas outside of Restricted Areas that contain material such that, if the license expired, the licensee would be required to either decontaminate the area to meet the criteria for decommissioning in 10 CFR 20, subpart E, (CFR, 2008e) or apply for approval for disposal under 10 CFR 20.2002 (CFR, 2008f).
4. Records of the cost estimate performed for the decommissioning funding plan or of the amount certified for decommissioning, and records of the funding method used for assuring funds if either a funding plan or certification is used.

10.1.6 Decommissioning Process

10.1.6.1 Overview

The four Separation Building Modules will be shutdown in sequence starting with Separations Building Module 1. Since only low radiation levels exist at this facility, decommissioning may begin immediately following the permanent shutdown of the first series of cascades in a Separations Building Module. The decommissioning of a single Separations Building Module is assumed to take 4.5 years; 3 years for decommissioning of the centrifuges and associated equipment and 1.5 years for decontamination of the structure. Dismantling and decontamination of the equipment in the four Separations Building Modules will be performed in a phased approach such that the decommissioning of all four Separations Building Modules is completed within an eight year time frame.

Termination of Separations Building Module 4 operations will mark the end of uranium enrichment operations at the facility. Also, decommissioning of the remaining plant systems and buildings will begin after Separations Building Module 4 operations have been permanently terminated. A conceptual decommissioning schedule is provided in Figure 10.1-1, Eagle Rock Enrichment Facility – Conceptual Decommissioning Schedule.

Prior to beginning decommissioning operations, an extensive radiological survey of the facility will be performed in conjunction with a historical site assessment. The findings of the radiological survey and historical site assessment will be presented in a Decommissioning Plan

to be submitted to the NRC. The Decommissioning Plan will be prepared in accordance with 10 CFR 70.38 (CFR, 2008a) and the applicable guidance provided in NUREG-1757 NRC, 2006).

Decommissioning activities will generally include: (1) installation of decontamination facilities, (2) purging of process systems, (3) dismantling and removal of equipment, (4) decontamination and destruction of Confidential and Secret Restricted Data material, (5) sales of salvaged materials, (6) disposal of wastes, and (7) completion of a final radiation survey. Credit is not taken for any salvage value that might be realized from the sale of potential assets (e.g., recovered materials or decontaminated equipment) during or after decommissioning.

Decommissioning, using the DECON approach, requires residual radioactivity to be reduced below specified levels so the facilities may be released for unrestricted use. Current Nuclear Material Safety and Safeguards guidelines for release serve as the basis for decontamination costs estimated herein. Portions of the facility that do not exceed contamination limits may remain as is without further decontamination measures applied. The intent of decommissioning the facility is to remove all enrichment-related equipment from the buildings such that only the building shells and site infrastructure remain. The removed equipment includes all piping and components from systems providing UF_6 containment, systems in direct support of enrichment (such as refrigerant and chilled water), radioactive and hazardous waste handling systems, contaminated HVAC filtration systems, etc. The remaining site infrastructure will include services such as electrical power supply, treated water, fire protection, HVAC, cooling water and communications.

Decontamination of plant components and structures will require installation of new facilities dedicated for that purpose. Existing plant buildings, such as the Centrifuge Assembly Building, are assumed to house the facilities. These facilities will be specially designed to accommodate repetitive cleaning of thousands of centrifuges, and to serve as a general-purpose facility used primarily for cleaning larger components. The new facilities will be the primary location for decontamination activities during the decommissioning process. The small decontamination area in the Technical Support Building (TSB), used during normal operation, may also handle small items at decommissioning.

Decontaminated components may be reused or sold as scrap. All equipment that is to be reused or sold as scrap will be decontaminated to a level at which further use is unrestricted. Materials that cannot be decontaminated will be disposed of in a licensed radioactive waste disposal facility. As noted earlier, credit is not taken for any salvage value that might be realized from the sale of potential assets (e.g., recovered materials or decontaminated equipment) during or after decommissioning.

Any UF_6 tails remaining on site will be removed during decommissioning. Depending on technological developments occurring prior to plant shutdown, the tails may have become marketable for further enrichment or other processes. The disposition of UF_6 tails and relevant funding provisions are discussed in Section 10.3, Tails Disposition. The cost estimate takes no credit for any value that may be realized in the future due to the potential marketability of the stored tails.

Contaminated portions of the buildings will be decontaminated as required. Structural contamination should be limited to structures in the Restricted Areas. Good housekeeping practices during normal operation will maintain the other areas of the site clean.

When decontamination is complete, all areas and facilities on the site will be surveyed to verify that further decontamination is not required. Decontamination activities will continue until the entire site is demonstrated to be suitable for unrestricted use.

10.1.6.2 Decontamination Methodology

The standard decontamination methodology to be used during EREF decommissioning will employ conventional decontamination techniques as follows. As described in Section 10.1.6.1 above, the buildings and components are characterized with respect to radioactive contamination immediately prior to the start of decommissioning. The non-contaminated components are removed, monitored again and free released for disposal offsite. The experience from decommissioning experience in Europe is that all non uranium handling components (e.g. electrical cabinets, cable runs, utility pipe work, etc.) will be free of any contamination. The contaminated components in buildings other than the Separations Building Modules (i.e., Other Buildings) are initially washed down to remove any contamination. The cleaned components are re-monitored and, if found to be clear of contamination, are also free released for disposal offsite. If any component after cleaning and monitoring still shows contamination, then that component will be reviewed and sorted for decontamination feasibility.

For the Separations Building Modules, a section of pipe work is decontaminated in situ by circulating citric acid or other suitable decontamination fluid followed by wash water around the pipes. This pipe work will then be taken down, transferred to the decontamination facility, volume reduced, and made ready for dispatch to a licensed disposal facility.

The remainder of the equipment and piping in the Separations Building Modules is dismantled into sections suitable for transport to the Decontamination Facility. Specifically, the dismantling will strip the facility down to individual centrifuge machine level. In the decontamination facility, the dismantled sections will be dismantled further (i.e., sub-dismantled). The sub-dismantled components will be subject to a decontamination feasibility review. The decontamination feasibility review will check that the item is open to the free flow of decontaminating and cleaning fluids and will allow monitoring of the component after decontamination. Components failing the feasibility review will be consigned to volume reduction and preparation for shipment to a licensed disposal facility. An example of a component failing decontamination feasibility review would be a long thin tube for which there would be no practical means of either passing decontamination fluids through it or of monitoring the internal surfaces after the decontamination process.

Components designated for decontamination will be inspected to determine if any oil or loose bulk contamination are present. In the event of the presence of oil, the components will be degreased. In the event of the presence of loose bulk contamination, the bulk contamination will be removed within a fume hood by the use of hand tools, wire brushes, etc. When the component is determined to be free of oil and loose bulk contamination, it is processed through a series of decontamination and wash water baths. For classified components that pass the decontamination feasibility review, decontamination involves use of the citric acid decontamination and wash water baths. For other buildings components, typically only components in the categories "Ventilation/Ductwork" and “Equipment/Materials," these are decontaminated using the citric acid or other suitable fluid decontamination and wash water baths. Following final drying and radiation monitoring, the item is available for preparation for disposal at a licensed disposal facility.

10.1.6.3 Decontamination Facility Construction

New facilities for decontamination can be installed in existing plant buildings to avoid unnecessary expense. Estimated time for equipment installation is approximately one year. These new facilities will be completed in time to support the dismantling and decontamination of

Separations Building Module 1. These facilities are described in Section 10.1.7, Decontamination Facilities.

10.1.6.4 System Cleaning

At the end of the useful life of each Separations Building Module, the enrichment process is shut down and UF_6 is removed to the fullest extent possible by normal process operation. This is followed by evacuation and purging with nitrogen. This shutdown and purging portion of the decommissioning process is estimated to take approximately three months.

10.1.6.5 Dismantling

Dismantling is simply a matter of cutting and disconnecting all components requiring removal. The operations themselves are simple but very labor intensive. They generally require the use of protective clothing. The work process will be optimized, considering the following:

- Minimizing the spread of contamination and the need for protective clothing
- Balancing the number of cutting and removal operations with the resultant decontamination and disposal requirements
- Optimizing the rate of dismantling with the rate of decontamination facility throughput
- Providing storage and laydown space required, as impacted by retrievability, criticality safety, security, etc
- Balancing the cost of decontamination and salvage with the cost of disposal.

Details of the complex optimization process will necessarily be decided near the end of plant life, taking into account specific contamination levels, market conditions, and available waste disposal sites. To avoid lay down space and contamination problems, dismantling should be allowed to proceed generally no faster than the downstream decontamination process.

The time frame to accomplish both dismantling and decontamination at EREF is estimated to be approximately four and a half years per Separations Building Module. The NEF conceptual decommissioning schedule shows three years for each module. The four and a half years per EREF module is consistent with the NEF estimate given the 24 cascades per EREF module compared with 16 cascades per NEF module. The four EREF Separations Building Modules will be decommissioned in sequence starting with Separations Building 1 and will be phased such that the decommissioning of all four will be completed in eight years. An additional year following decommissioning of the last Separations Building Modules is assumed for the final site survey and other activities.

10.1.6.6 Decontamination

The decontamination process is addressed separately in detail in Section 10.1.7.

10.1.6.7 Salvage of Equipment and Materials

Items to be removed from the facilities can be categorized as potentially re-usable equipment, recoverable scrap, and wastes. However, based on a 30-year facility operating license, operating equipment is not assumed to have reuse value. Wastes will also have no salvage value.

With respect to scrap, a significant amount of aluminum will be recovered, along with smaller amounts of steel, copper, and other metals. For security and convenience, the uncontaminated materials will likely be smelted to standard ingots, and, if possible, sold at market price. The contaminated materials will be disposed of as low-level radioactive waste. No credit is taken for any salvage value that might be realized from the sale of potential assets during or after decommissioning.

10.1.6.8 Disposal

All wastes produced during decommissioning will be collected, handled, and disposed of in a manner similar to that described for those wastes produced during normal operation. Wastes will consist of normal industrial trash, non-hazardous chemicals and fluids, small amounts of hazardous materials, and radioactive wastes. The radioactive waste will consist primarily of crushed centrifuge rotors, trash, and citric cake. Citric cake consists of uranium and metallic compounds precipitated from citric acid decontamination solutions. It is estimated that approximately 7,700 m^3 (10,071 yd^3) of radioactive waste will be generated over the decommissioning operations period. (This waste is subject to further volume reduction processes prior to disposal).

Radioactive wastes will ultimately be disposed of in licensed low-level radioactive waste disposal facilities. Hazardous wastes will be disposed of in hazardous waste disposal facilities. Non-hazardous and non-radioactive wastes will be disposed of in a manner consistent with good industrial practice and in accordance with all applicable regulations. A complete estimate of the wastes and effluent to be produced during decommissioning will be provided in the Decommissioning Plan that will be submitted prior to initiating the decommissioning of the plant.

Confidential and Secret Restricted Data components and documents on site shall be disposed of in accordance with the requirements of 10 CFR 95 (CFR, 2008g). Such classified portions of the centrifuges will be destroyed, piping will likely be smelted, documents will be destroyed, and other items will be handled in an appropriate manner. Details will be provided in the facility Standard Practice Procedures Plan for the protection of classified matter, submitted separately in accordance with 10 CFR 95 (CFR, 2008g).

10.1.6.9 Final Radiation Survey

A final radiation survey must be performed to verify proper decontamination to allow the site to be released for unrestricted use. The evaluation of the final radiation survey is based in part on an initial radiation survey performed prior to initial operation. The initial survey determines the natural background radiation of the area; therefore it provides a datum for measurements which determine any increase in levels of radioactivity.

The final survey will systematically measure radioactivity over the entire site. The intensity of the survey will vary depending on the location (i.e. the buildings, the immediate area around the buildings, and the remainder of the site). The survey procedures and results will be documented in a report. The report will include, among other things, a map of the survey site, measurement results, and the site's relationship to the surrounding area. The results will be analyzed and shown to be below allowable residual radioactivity limits; otherwise, further decontamination will be performed.

For decommissioning funding purposes, it is assumed that 324 samples will be taken within the 242 ha (592 acre) EREF Restricted Area (area within the security fence). This is based on assuming a sampling grid pattern approximately 91 m by 91 m (100 yds by 100 yds). The grid is based on sampling experience of similar areas at decommissioned nuclear power plants. Outside

of the Restricted Area, but within the site boundaries, the likelihood for contamination is extremely remote. Therefore, the grid will be expanded such that samples will be taken on a grid approximately 610 m by 610 m (667 yards by 667 yards). This results in a need for approximately 60 additional samples, bringing the total number of samples to 384. A total of 500 samples are assumed as a conservative measure and for consistency with the reference plant (NEF). The analysis of the samples will be provided by a third party since, at the time of performance of the final radiation survey, no analysis facilities will be available on site.

10.1.7 Decontamination Facilities

10.1.7.1 Overview

The facilities, procedures, and expected results of decontamination are described in the paragraphs below. Since reprocessed uranium will not be used as feed in the EREF, no consideration of ^{232}U, transuranic alpha-emitters and fission product residues is necessary for the decontamination process. Only contamination from ^{238}U, ^{235}U, ^{234}U, and their daughter products will require handling by decontamination processes. The primary contaminant throughout the plant will be in the form of small amounts of UO_2F_2, with even smaller amounts of UF_4 and other compounds.

10.1.7.2 Facilities Description

A decontamination facility will be required to accommodate decommissioning. This specialized facility is needed for optimal handling of the thousands of centrifuges to be decontaminated, along with the UF_6 vacuum pumps and valves. Additionally, a general purpose facility is required for handling the remainder of the various plant components. These facilities are assumed to be installed in existing plant buildings (such as the Centrifuge Assembly Building).

The decontamination facility will have four functional areas that include: (1) a disassembly area, (2) a buffer stock area, (3) a decontamination area, and (4) a scrap storage area for cleaned stock. The general purpose facility may share the specialized decontamination area. However, due to various sizes and shapes of other plant components needing handling, the disassembly area, buffer stock areas, and scrap storage areas may not be shared. Barriers and other physical measures will be installed and administrative controls implemented, as needed, to limit the spread of contamination.

Equipment in the decontamination facility is assumed to include:

- Transport and manipulation equipment
- Dismantling tables for centrifuge externals
- Sawing machines
- Dismantling boxes and tanks, for centrifuge internals
- Degreasers
- Citric acid and/or other suitable decontamination fluids and demineralized water baths
- Contamination monitors
- Wet blast cabinets
- Crusher, for centrifuge rotors

- Smelting and/or shredding equipment
- Scrubbing facility.

The decontamination facilities provided in the TSB for normal operational needs would also be available for cleaning small items during decommissioning.

10.1.7.3 Procedures

Formal procedures for all major decommissioning activities will be developed and approved by plant management to minimize worker exposure and waste volumes, and to assure work is carried out in a safe manner.

At the end of plant life, some of the equipment, most of the buildings, and all of the outdoor areas should already be acceptable for release for unrestricted use. If they are accidentally contaminated during normal operation, they would be cleaned up when the contamination is discovered. This limits the scope of necessary decontamination at the time of decommissioning.

Contaminated plant components will be cut up or dismantled, then processed through the decontamination facilities. Contamination of site structures will be limited to areas in the Separations Building Modules, the Blending, Sampling and Preparation Building, the Centrifuge Assembly Building, and TSB, and will be maintained at low levels throughout plant operation by regular cleaning. Through the application of special protective coatings, to surfaces that might become radioactively contaminated during operation, and good housekeeping practices, final decontamination of these areas is assumed to require minimal removal of surface concrete or other structural material.

The centrifuges will be processed through the specialized facility. The following operations will be performed.

- Removal of external fittings
- Removal of bottom flange, motor and bearings, and collection of contaminated oil
- Removal of top flange, and withdrawal and disassembly of internals
- Degreasing of items as required
- Decontamination of all recoverable items for smelting
- Destruction of other classified portions by shredding, crushing, smelting, etc.

10.1.7.4 Results

Experience with centrifuge enrichment plants in Europe (LES, 2005) having similar levels of contamination, has demonstrated that conventional decontamination techniques are effective for all plant items. Recoverable items have been decontaminated and made suitable for reuse except for a very small amount of intractably contaminated material. The majority of radioactive waste requiring disposal in the EREF will include crushed centrifuge rotors, trash, and residue from the effluent treatment systems.

European experience (LES, 2005) has demonstrated that the aluminum centrifuge casings can be successfully decontaminated and recycled. However, as a conservative measure for this decommissioning cost estimate, the aluminum centrifuge casings for the EREF are assumed to be disposed of as low-level radioactive waste.

Overall, no problems are anticipated that will prevent the site from being released for unrestricted use.

10.1.7.5 Decommissioning Impact on Integrated Safety Analysis (ISA)

As was described in Section 10.1.3.1, Summary of Costs, dismantling and decontamination of the equipment in the four Separations Building Modules will be conducted sequentially over an eight year time frame with an additional one year period for final site surveys and other decommissioning activities. Termination of Separations Module 4 operations will mark the end of uranium enrichment operations at the EREF. Decommissioning of the remaining plant systems and buildings will begin after Separations Building Module 4 operations have been permanently terminated.

Although decommissioning operations are planned to be underway while all the activities considered in the ISA continue to occur in the other portions of the plant, the current ISA has not considered these decommissioning risks. An updated ISA will be performed at a later date, but prior to decommissioning, to incorporate the risks from decommissioning operations on concurrent enrichment operations.

10.2 FINANCIAL ASSURANCE MECHANISM

10.2.1 Decommissioning Funding Mechanism

AES intends to utilize a Letter of Credit to provide reasonable assurance of decommissioning funding as required by 10 CFR 40.36(e)(2) (CFR, 2008h) and 70.25(f)(2) (CFR, 2008i). Finalization of the specific financial instruments to be utilized will be completed, and signed originals of those instruments will be provided to the NRC, prior to receipt of licensed material at the EREF. AES intends to provide continuous financial assurance from the time of receipt of licensed material to the completion of decommissioning and termination of the license. Since AES intends to sequentially install and operate the Separations Building Modules over time, financial assurance for decommissioning will be provided during the operating life of the EREF at a rate that is in proportion to the decommissioning liability for these facilities as they are phased in.

Similarly, AES will provide decommissioning funding assurance for disposition of depleted tails at a rate in proportion to the amount of accumulated tails onsite up to the maximum amount of the tails as described in Section 10.3, Tails Disposition. An exemption request to permit this incremental financial assurance is provided in Section 1.2.5, “Special Exemptions or Special Authorizations.”

The Letter of Credit method to be utilized by AES will guarantee that decommissioning costs will be paid in the event it is unable to meet its decommissioning obligations at the time of decommissioning. The Letter of Credit method will also be structured and adopted consistent with applicable NRC regulatory requirements and in accordance with NRC regulatory guidance contained in NUREG-1757 NRC, 2006). Accordingly, AES intends that its Letter of Credit will contain, but not be limited to, the following attributes:

- The amount of the Letter of Credit shall equal or exceed the required coverage level.
- The Letter of Credit shall be from a financial institution that is regulated by a U.S. Federal or State agency.
- The Letter of Credit will be written for a specified one year term and will be renewed automatically unless 90 days or more prior to the renewal date, the issuing bank notifies the NRC, of its intention not to renew. The Letter of Credit will also provide that the full face amount can be paid to the beneficiary prior to the expiration without proof of forfeiture if AES fails to provide a replacement mechanism acceptable to the NRC within 30 days after receipt of notification of cancellation.
- Funds drawn from the Letter of Credit will be placed directly into a standby trust fund.

In addition, the Letter of Credit method will remain in effect until the NRC has terminated the license.

Unexecuted copies of the Letter of Credit documentation are provided in Appendices 10A through 10F. Prior to the EREF receipt of licensed material, the applicable unexecuted copies of the Letter of Credit documentation will be replaced with the finalized, signed, and executed Letter of Credit documentation and a supporting executed Standby Trust Agreement.

10.2.2 Adjusting Decommissioning Costs and Funding

In accordance with 10 CFR 40.36(d) (CFR, 2008h) and 70.25(e) (CFR, 2008i), AES will update the decommissioning cost estimate for the EREF, and the associated funding levels, over the life of the facility. These updates will take into account changes resulting from inflation or site-specific factors, such as changes in facility conditions or expected decommissioning procedures. These funding level updates will also address anticipated operation of additional Separations Building Modules and accumulated tails, if any are anticipated.

As required by the applicable regulations in 10 CFR 70.25(e) (CFR, 2008i), such updating will occur approximately every three years. A record of the update process and results will be retained for review as discussed in Section 10.2.3, below. The NRC will be notified of any material changes to the decommissioning cost estimate and associated funding levels (e.g., significant increases in costs beyond anticipated inflation). To the extent the underlying instruments are revised to reflect changes in funding levels, the NRC will be notified as appropriate.

In addition to the triennial update of the decommissioning cost estimate described above, AES has committed to supplemental updates as described in the request for exemption in SAR Section 1.2.5 in order to ensure adequate financial assurance on an incremental basis. Specifically, AES commits to update the decommissioning cost estimates and to provide to the NRC a revised funding instrument for facility decommissioning prior to the operation of each Separations Building Module at a minimum. AES also commits to updating the cost estimates for the disposition of the DUF_6 on an annual forward-looking incremental basis and to providing the NRC revised funding instruments that reflect these projections of DUF_6 production. If any adjustments to the funding assurance are determined to be needed during this annual period due to production variations, they would be made promptly and a revised funding instrument would be provided to the NRC.

For the first three year period of operations, currently forecast as years 3, 4, and 5 after license issuance, AES intends to provide decommissioning funding assurance for: (1) the tfirst Separations Building Module; (2) all the other potentially radiologically contaminated structures, systems, and components; and (3) the amount of DUF_6 that would be produced by the end of that period. In 2007 dollars, the following cost estimates would be assured: (1) the estimated cost of $94,653,000 to decommission the first Separations Building Module from Table 10.1-16; (2) the estimated cost of $10,226,000 to decommission “Other Buildings” from Table 10.1-14, "Total Decommissioning Costs;" and (3) the estimated cost for disposition of 11,452 MT of DUF_6, the amount conservatively assumed to be produced for purposes of funding assurance by the end of the first three years of operation based on a projected nominal 30 years of operation. Refer to Table 10.3-1 for these nominal production and buildup projections. At a rate of $7.66 per kilogram (kg) of DUF_6, ($7,660 per MT of DUF_6) as discussed in SAR Section 10.3, this results in a cost of $87,722,000 for tails disposal. Applying a 25% contingency factor to the sum of costs for (1), (2), and (3) above, yields a total projected decommissioning cost estimate for the initial three year period of EREF operation for which financial assurance would be provided of $240,751,000.

As described above, however, AES will update the decommissioning cost estimate at least every three years and will provide decommissioning funding assurance on the incremental basis described above, i.e., prior to the operation of each Separations Building Module and on an annual basis for the DUF_6.

10.2.3 Recordkeeping Plans Related to Decommissioning Funding

In accordance with 10 CFR 40.36(f) (CFR, 2008h) and 70.25(g) (CFR, 2008i), the EREF will retain records, until the termination of the license, of information that could have a material effect on the ultimate costs of decommissioning. These records will include information regarding: (1) spills or other contamination that cause contaminants to remain following cleanup efforts; (2) as built drawings of structures and equipment, and modifications thereto, where radioactive contamination exists (e.g., from the use or storage of such materials); (3) original and modified cost estimates of decommissioning; and (4) original and modified decommissioning funding instruments and supporting documentation.

10.3 TAILS DISPOSITION

The disposition of tails from the EREF is an element of authorized operating activities. It involves neither decommissioning waste nor is it a part of decommissioning activities. The disposal of these tails is analogous to the disposal of radioactive materials generated in the course of normal operations (even including spent fuel in the case of a power reactor), which is authorized by the operating license and subject to separate disposition requirements. Such costs are not appropriately included in decommissioning costs (this principle (in the 10 CFR 50 context) is discussed in Regulatory Guide 1.159 (NRC, 2003), Section 1.3, page 1.159-8).

Further, the "tails" products from the EREF are not mill tailings, as regulated pursuant to the Uranium Mill Tailings Radiation Control Act, as amended and 10 CFR 40, Appendix A (CFR, 2008j), and are not subject to the financial requirements applicable to mill tailings.

Nevertheless, AES intends to provide for expected tails disposition costs (even assuming ultimate disposal as waste) during the life of the facility. Funds to cover these costs are based on the amount of tails generated and the unit cost for the disposal of depleted UF_6.

It is anticipated that the EREF will generate 217,193 MT of depleted uranium tails which is equivalent to 321,235 MT DUF_6. This estimate is conservative as it assumes continuous production of tails over 30 years of operation. Actual tails production will cease prior to the end of the license term as shown in Figure 10.1-1, EREF - Conceptual Decommissioning Schedule. In addition, actual production will ramp up and ramp down during the initial and final production periods, respectively. Refer to Table 10.3-1, Tails Production and Buildup During 30-Year License Period.

By statute (USC, 2006), DOE is required to take title to, and to dispose of the "low-level radioactive waste" generated by uranium enrichment facilities. As such, DOE is required to accept DUF_6 for disposal if it is determined to be a low-level radioactive waste generated by an enrichment facility licensed by the NRC. The NRC has determined that DUF_6 is properly considered a low-level radioactive waste (NRC, 2005). As discussed more fully in ER Section 4.13.3, AES has, therefore, decided that, for purposes of providing funding assurance, to assume that DOE will take title to and dispose of the DUF_6 generated by the EREF.

AES requested that DOE provide a cost estimate to accept, convert, and dispose of DUF_6 to be generated by the proposed EREF. In March 2008, the DOE responded as follows: "The Department would accept upon request, such DUF_6 for conversion and disposal (or beneficial reuse) pursuant to authorities granted to DOE under the Atomic Energy Act" (DOE, 2008).

Along with DOE's authorization to accept the DUF_6 for disposal from an NRC licensed generator, upon request by a generator, the requesting company must reimburse the DOE for the disposal of the depleted uranium ". . . in an amount equal to the Secretary's costs, including a pro rata share of any capital costs" (Public Law, 1996). Therefore, DOE performed an analysis of the costs associated with accepting and processing additional material for disposition, and developed a cost per kilogram for providing this service (DOE, 2008). AES confirmed the DOE cost estimate (AES, 2009) is applicable to disposal of DUF_6 for an expanded EREF (6.6 million SWU/year). It was noted by the DOE expert that while the total amount of DUF_6 generated will be larger than that used in the cost analysis, the cost of disposal of a kilogram of DUF_6 generated in the DOE cost estimate (DOE, 2008) would remain essentially the same, and could possibly be reduced by a small percentage. To be conservative, AES utilizes the highest disposal cost per kilogram established in the DOE cost estimate (DOE, 2008) to calculate the cost to dispose of DUF_6 for a 6.6 million SWU/year facility.

According to the DOE response (DOE, 2008), processing and disposal costs for DUF_6 tails at the DOE facility are projected to be a maximum of $5.78 per kg DUF_6 (2007 dollars). Although originally provided for a 3.3M SWU capacity facility, this rate also applies to a 6.6M SWU capacity facility. In addition to the processing and disposal cost, AES has estimated that transport of the tails from the EREF to the DOE facility will cost $0.66 per kg and that cylinder management (handling and disposal) will cost $1.22 per kg, bringing the total cost for disposition of the tails to $7.66 per kg or $7,660 per MT$DUF_6$.

The value of $7.66 per kg of DUF_6 was used to determine the total tails disposition funding requirement and the amount of financial assurance required for this purpose. Assuming the production of 321,235 MT DUF_6 tails during 30 years of operation and a tails transport and dispositioning cost of $7.66 per kg DUF_6 or $7,660 per MT DUF_6, the total tails disposition funding requirement is estimated at $2.461 billion. This sum will be included as part of the financial assurance for decommissioning over the operating lifetime of the EREF (Refer to Table 10.1-14, Total Decommissioning Costs). The Environmental Report Section 4.13.3.6, Costs Associated with UF_6 Tails Conversion and Disposal, provides further details on the costs for the disposition of DUF_6 tails.

10.4 REFERENCES

AES, 2009. AREVA Enrichment Services LLC letter (George A. Harper) to USDOE (Ines R. Triay, Ph.D), April 1, 2009.

CFR, 2008a. Title 10, Code of Federal Regulations, Section 70.38, Expiration and termination of licenses and decommissioning of sites and separate buildings or outdoor areas, 2008.

CFR, 2008b. Title 10, Code of Federal Regulations, Section 20.1402, Radiological criteria for unrestricted use, 2008.

CFR, 2008c. Title 10, Code of Federal Regulations, Part 20.1003, Definitions, 2008.

CFR, 2008d. Title 10, Code of Federal Regulations, Part 20.2108, Records of waste disposal, 2008.

CFR, 2008e. Title 10, Code of Federal Regulations, Part 20, Subpart E, Radiological Criteria for License Termination, 2008.

CFR, 2008f. Title 10, Code of Federal Regulations, Part 20.2002, Method for obtaining approval of proposed disposal procedures, 2008.

CFR, 2008g. Title 10, Code of Federal Regulations, Part 95, Security Facility Approval and Safeguarding of National Security Information and Restricted Data, 2008.

CFR, 2008h. Title 10, Code of Federal Regulations, Section 40.36, Financial assurance and recordkeeping for decommissioning, 2008.

CFR, 2008i. Title 10, Code of Federal Regulations, Section 70.25, Financial assurance and recordkeeping for decommissioning, 2008.

CFR, 2008j. Title 10, Code of Federal Regulations, Part 40, Appendix A, Criteria Relating to the Operation of Uranium Mills and the Disposition of Tailings or Wastes Produced by the Extraction or Concentration of Source Material From Ores Processed Primarily for Their Source Material Content, 2008.

CFR, 2008k. Title 10, Code of Federal Regulations, Part 20.2003, Disposal by release into sanitary sewerage, 2008.

CFR, 2008l. Title 10, Code of Federal Regulations, Part 20.2004, Treatment or disposal by incineration, 2008.

CFR, 2008m. Title 10, Code of Federal Regulations, Part 20.2005, Disposal of specific wastes, 2008.

CFR, 2008n. Title 10, Code of Federal Regulations, Part 61, Licensing Requirements for Land Disposal of Radioactive Waste, 2008.

CFR, 2008n. Title 10, Code of Federal Regulations, Part 20, Subpart E--Radiological Criteria for License Termination, 2008.

DOE, 2008. Letter from Ines R. Triay, Principal Deputy Assistant Secretary for Environmental Management to Sam Shakir regarding DOE Acceptance, Converting, and Disposal of Depleted Uranium Hexafluoride (DUF6) to be Generated by the AREVA Proposed Enrichment Facility, March 17, 2008.

LES, 2005. Letter NEF#05-009 from R.M. Krich, Louisiana Energy Services, LP to Director, Office of Nuclear Material Safety and Safeguards, U.S. Nuclear Regulatory Commission, Clarifying Information Related to the Decommissioning Funding Plan, March 3, 2005.

NRC 2002a. Standard Review Plan for the Review of a License Application for a Fuel Cycle Facility, NUREG-1520, U.S. Nuclear Regulatory Commission, March 2002.

NRC, 2002b. Revised Analyses of Decommissioning Reference Non-Fuel-Cycle Facilities, NUREG/CR-6477, U.S. Nuclear Regulatory Commission, December 2002.

NRC, 2003. Assuring the Availability of Funds for Decommissioning Nuclear Reactors, Regulatory Guide 1.159, U.S. Nuclear Regulatory Commission, Revision 1, October 2003.

NRC, 2006. Consolidated NMSS Decommissioning Guidance - Financial Assurance, Recordkeeping, and Timeliness, NUREG-1757, Volume 3, U.S. Nuclear Regulatory Commission, September 2006.

NRC, 2005. Safety Evaluation Report for the National Enrichment Facility, Lea County, New Mexico, NUREG - 1827, U.S. Nuclear Regulatory Commission, 2005.

Public Law, 1996. Public Law 104-134, Title III, Chapter 1, USEC Privatization Act, Section 3113 (a)(2), 1996.

USC, 2006. Title 42 U.S. Code, The Public Health and Welfare, Section 2297h-11, Low-Level Waste, January 2006.

TABLES

Table 10.1-1A Number and Dimensions of Facility Components
(Page 1 of 1)

Separations Buildings (Note 1)			
Component	**Number of Components**	**Dimensions of Components**	**Total Dimensions**
Glove Boxes	None	NA	NA
Fume Cupboards	None	NA	NA
Lab Benches	None	NA	NA
Sinks	None	NA	NA
Drains	None	NA	NA
Floors	None (Note 2)	NA	NA
Walls	None (Note 2)	NA	NA
Ceilings	None (Note 2)	NA	NA
Ventilation/Ductwork	None	NA	NA
Hot Cells	None	NA	NA
Equipment/Materials	(Note 3) (Note 5)	Various sizes of pipe work	139,222 ft. (42,435 m)
	Valves	(Note 4)	(Note 4)
	Other	(Note 4)	(Note 4)
Soil Plots	None	NA	NA
Storage Tanks	None	NA	NA
Storage Areas	None	NA	NA
Radwaste Areas	None	NA	NA
Scrap Recovery Areas	None	NA	NA
Maintenance Shop	None	NA	NA
Equipment Decontamination Areas	None	NA	NA
Other	None	NA	NA

Notes:
1. Approximately 97% of the decommissioning costs for the facility are attributed to the dismantling, decontamination, processing, and disposal of centrifuges and other equipment in the Separations Building Modules, which are considered classified. Given the classified nature of these buildings, the data presented in these tables have been structured to meet the applicable NUREG-1757 recommendations, to the extent practicable. However, specific information regarding numbers of components, dimensions of components, and total dimensions, has been intentionally excluded to protect the classified nature of the data. The classified portion of the decommissioning cost estimate is been provided under separate cover.
2. No floors, walls, or ceilings are anticipated needing decontamination.
3. Total dimensions provided.
4. Total dimension not used in estimating model
5. Length of piping associated with 6 million SWU facility is assumed to be twice that for a 3 million SWU facility.

Table 10.1-1B Number and Dimensions of Facility Components
(Page 1 of 1)

Decommission Decontamination Facility			
Component	**Number of Components**	**Dimensions of Components**	**Total Dimensions**
Glove Boxes	None	NA	NA
Fume Hoods	None	NA	NA
Lab Benches	10	Various sizes of lab and workshop benches ranging from 6.5 to 13 ft long (2 m by 4 m) by 2.5 ft (0.75 m) wide	(Note 1)
Sinks	6	Standard laboratory sinks and hand wash	(Note 1)
Drains	6	Standard laboratory type drains	(Note 1)
Floors	1 Lot (Note 2)	(Note 1)	(Note 1)
Walls	1 Lot (Note 2)	(Note 1)	(Note 1)
Ceilings	1 Lot (Note 2)	(Note 1)	(Note 1)
Ventilation/Ductwork	(Note 3)	Various sizes of ductwork ranging from 3 in (8 cm) to 18 in (46 cm) plus dampers, valves and flexibles	640 ft (195 m)
Hot Cells	None	NA	NA
Equipment/Materials	20	Various pieces of equipment including citric cleaning tanks, centrifuge cutting machines	(Note 1)
Soil Plots	None	NA	NA
Storage Tanks	1 Lot (Note 2)	Various storage tanks	(Note 1)
Storage Areas	1	Storage area for centrifuges and pipe work	(Note 1)
Radwaste Areas	None	NA	NA
Scrap Recovery Areas	None	NA	NA
Maintenance Shop	None	NA	NA
Equipment Decontamination Areas	None	NA	NA
Other	1 Lot (Note 2)	Hand tools and consumables that become contaminated while carrying out dismantling and decontamination work, unmeasured work and scaffolding	(Note 1)

Notes:

1. Total dimensions not used in estimating model.
2. Allocation based on European decommissioning experience .
3. Total Dimensions provided.

Table 10.1-1C Number and Dimensions of Facility Components (Page 1 of 1)

Technical Support Building			
Component	**Number of Components**	**Dimensions of Components**	**Total Dimensions**
Glove Boxes	None	NA	NA
Fume Hoods	18	Standard laboratory fume hoods, approx 6.5 - 8 feet (2 to 2.5 m) high x 5 feet (1.5 m) wide	(Note 1)
Lab Benches	25	Various sizes of lab and workshop benches ranging from 6.5 -13 feet (2 to 4 m) long by 2.5 feet wide (0.75 m)	(Note 1)
Sinks	12	Standard laboratory sinks and hand wash basins	(Note 1)
Drains	12	Standard Laboratory type drains	(Note 1)
Floors	(Notes 3, 4)	Floor area covers all Workshops and Labs in the Technical Services Bldg that may be exposed to contamination	70,440 ft^2 (6,544 m^2)
Walls	(Notes 3, 4)	Wall area covers all Workshops and Labs in the Technical Services Bldg that may be exposed to contamination	146,704 ft^2 (13,629 m^2)
Ceilings	(Notes 3, 4)	Ceiling area covers all Workshops and Labs in the Technical Services Bldg that may be exposed to contamination	70,440 ft^2 (6,544 m^2)
Ventilation/Ductwork	(Note 3)	Various pieces of equipment including, filter banks, extractor fans, vent stack, dampers and approx 1,200 feet (366 m) of large and small ductwork	1,200 ft (366 m)
Hot Cells	None	NA	NA
Equipment/Materials	57	Various pieces of equipment including, mass spectrometers, hydraulic lift tables, cleaning cabinets	(Note 1)
Soil Plots	None	NA	NA
Storage Tanks	16	Waste oil storage tank (53 gal) (201 l) and Liquid Effluent Collection and Treatment System Tanks	NA
Storage Areas	2	Storage area for product removal, dirty pumps	(Note 1)
Radwaste Areas	None	NA	NA
Scrap Recovery Areas	None	NA	NA
Maintenance Shop	4	Third Floor Maintenance Facility	(Note 4)
Equipment Decontamination Areas	4	Third Floor Decontamination Workshop	(Note 4)
Other	1 Lot (Note 2)	Hand tools and consumables that become contaminated while carving out dismantling/ decontamination work, unmeasured work and scaffolding	(Note 1)

Notes:

1. Total dimensions not used in estimating model.
2. Allocation based on European decommissioning experience
3. Total Dimensions provided
4. Floor, wall, and ceiling areas of Third Floor Maintenance Facility and Third Floor Decontamination Workshop are included in overall totals.

Table 10.1-1D Number and Dimensions of Facility Components
(Page 1 of 1)

Gaseous Effluent Ventilation (GEV) System Throughout Plant			
Component	**Number of Components**	**Dimensions of Components**	**Total Dimensions**
Glove Boxes	None	NA	NA
Fume Hoods	None	NA	NA
Lab Benches	None	NA	NA
Sinks	None	NA	NA
Drains	None	NA	NA
Floors	None	NA	NA
Walls	None	NA	NA
Ceilings	None	NA	NA
Ventilation/Ductwork	(Note 3) (Note 4)	Various sizes of ductwork ranging from 3 to18 inches (7.6 to 46 cm) plus dampers, valves and flexibles	15,000 ft (4,572 m)
Hot Cells	None	NA	NA
Equipment/Materials	None	NA	NA
Soil Plots	None	NA	NA
Storage Tanks	None	NA	NA
Storage Areas	None	NA	NA
Radwaste Areas	None	NA	NA
Scrap Recovery Areas	None	NA	NA
Maintenance Shop	None	NA	NA
Equipment Decontamination Areas	None	NA	NA
Other	1 Lot (Note 2)	Hand tools and consumables that become contaminated while carrying out dismantling/ decontamination work, unmeasured work and scaffolding	(Note 1)

Notes:

1. Total dimensions not used in estimating model.
2. Allocation based on European decommissioning experience.
3. Total Dimensions provided.
4. Length of ventilation/ductwork for the 6M SWU facility is assumed to be twice that for the 3M SWU facility.

Table 10.1-1E Number and Dimensions of Facility Components
(Page 1 of 2)

Blending Sampling and Preparation Building			
Component	**Number of Components**	**Dimensions of Components**	**Total Dimensions**
Glove Boxes	None	NA	NA
Fume Hoods	None	NA	NA
Lab Benches	None	NA	NA
Sinks	None	NA	NA,
Drains	None	NA	NA
Floors	(Note 3) (Note 4) (Note 5)	NA	2,176 ft^2 (202 m^2)
Walls	(Note 3) (Note 4) (Note 5)	NA	18,202 ft^2 (1,691 m^2)
Ceilings	(Note 3) (Note 4) (Note 5)	NA	2,176 ft^2 (202 m^2)
Ventilation/Ductwork	Covered in GEV System estimate	Covered in GEV System estimate	Covered in GEV System estimate
Hot Cells	None	NA	NA

Table 10.1-1E Number and Dimensions of Facility Components
(Page 2 of 2)

Component	Number of Components	Dimensions of Components	Total Dimensions
Equipment/Materials	(Note 3) (Note 5)	Various sizes of pipe-work ranging from DN25 (NPS 1) to DN65 (NPS 2.5)	5,615 ft (1,711 m)
	58 Valves	Various types of valves ranging from 0.6 to 2.5 inches (1.5 to 6.5 cm) and manual to control	(Note 3)
	12	Various pieces of equipment including hot boxes and traps	(Note 1)
Soil Plots	None	NA	NA
Storage Tanks	None	NA	NA
Storage Areas	None	NA	NA
Radwaste Areas	None	NA	NA
Scrap Recovery Areas	None	NA	NA
Maintenance Shop	None	NA	NA
Equipment Decontamination Areas	None	NA	NA
Other	1 Lot (Note 2)	Hand tools and consumables that become contaminated while carrying out dismantling/ decontamination work, unmeasured work and scaffolding	(Note 1)

Notes:
1 Total dimensions not used in estimating model.
2. Allocation based on European decommissioning experience.
3 Total dimensions provided.
4. Areas calculated based on dimensions of Ventilated Room and associated Cylinder Airlock. Walls are assumed to extend the full height of the building.
5. Areas to be decontaminated in the 6M SWU facility are assumed to be twice the areas requiring decontamination in the 3M SWU facility. Piping length is assumed to increase by 50%.

Table 10.1-1F Number and Dimensions of Facility Components
(Page 1 of 2)

Centrifuge Test and Post Mortem			
Component	**Number of Components**	**Dimensions of Components**	**Total Dimensions**
Glove Boxes	None	NA	NA
Fume Hoods	None	NA	NA
Lab Benches	4	Various sizes of lab and workshop benches ranging from 6.5 - 13 feet (2 - 4 m) long by 2.5 feet (0.75 m) wide	(Note 1)
Sinks	2	Standard laboratory sinks and hand wash basins	(Note 1)
Drains	2	Standard laboratory type drains	(Note 1)
Floors	None (Note 4)	NA	NA
Walls	None (Note 4)	NA	NA
Ceilings	None (Note 4)	NA	NA
Ventilation/ Ductwork	None	NA	NA
Hot Cells	None	NA	NA
Equipment/Material	(Note 3)	Various sizes of pipe-work ranging from DN16 to DN40 (NPS 0.5 to NPS 1.5)	164 ft. (50 m)
	56 Valves	Various types of valve ranging from 0.6 to 1.6 inches (1.5 to 4 cm) and manual to control	(Note 1)
	7	Various pieces of equipment including feed take off vessels and traps	(Note 1)
Soil Plots	None	NA	NA
Storage Tanks	None	NA	NA
Storage Areas	None	NA	NA
Radwaste Areas	None	NA	NA
Scrap Recovery Areas	None	NA	NA

Table 10.1-1F Number and Dimensions of Facility Components
(Page 2 of 2)

Component	Number of Components	Dimensions of Components	Total Dimensions
Maintenance Shop	None	NA	NA
Equipment Decontamination Areas	None	NA	NA
Other	1 Lot (Note 2)	Hand tools and consumables that become contaminated while carrying out dismantling/ decontamination work, unmeasured work and scaffolding	(Note 1)

Notes:

1. Total dimensions not used in estimating model.
2. Allocation based on European decommissioning experience.
3. Total dimensions provided.
4. No floors, walls or ceilings are anticipated needing decontamination.

Table 10.1-2 Planning and Preparation
(Page 1 of 1)

Activity	Costs ($000)	Labor Shift-worker (mult-functional) (Man-days)	Labor Project Management (Man-days)	Labor Health Physics & Surveys (Man-days)	Activity Duration (Months)
Project Plan & Schedule	132	0	178	0	4
Site Characterization Plan	265	0	356	0	4
Site Characterization	306	82	368	144	4
Decommissioning Plan	463	0	622	0	6
NRC Review Period	67	0	89	0	12
Site Services Specifications	133	0	178	0	2
Project Procedures	133	0	178	0	4
TOTAL	1500	82	1,969	144	(Note 1)

Note:

1. Some activities will be conducted in parallel to achieve a 24 month time frame.

Table 10.1-3 Decontamination or Dismantling of Radioactive Components - (Man-Hours)
(Page 1 of 1)

Other Buildings (Note 1)					
Component	**Decon Method (Note 4)**	**Craftsman**	**Supervision (Note 2)**	**Project Manageme nt**	**HP&S/Chem (Note 3)**
Glove Boxes		0	0	0	0
Fume Cupboards		382	76	65	81
Lab Benches		397	78	67	83
Sinks		124	24	21	26
Drains		125	24	21	26
Floors		2,184	435	375	459
Walls		2,126	423	363	448
Ceilings		928	186	159	196
Ventilation/Ductwork/ Piping		20,217	4,042	3,455	4,250
Hot Cells		0	0	0	0
Equipment/Materials		1,877	376	321	394
Soil Plots		0	0	0	0
Storage Tanks		37	8	5	8
Storage Areas		135	27	23	28
Radwaste Areas		0	0	0	0
Scrap Recovery Areas		0	0	0	0
Maintenance Shop		0	0	0	0
Equipment Decontamination Areas		0	0	0	0
Other		2,342	468	400	492
Total Hours		30,873	6,168	5,274	6,491

Notes:
1. Includes the Decontamination Facility, Technical Support Building, Gaseous Effluent Ventilation System throughout Plant, Blending, Sampling, and Preparation Building, and Centrifuge Test and Post Mortem Facilities.
2. Supervision at 20%.
3. Supply ongoing monitoring and analysis service for dismantling teams.
4. Specific details of decontamination method not defined at this time. General decontamination methods to be used at EREF are discussed in Section 10.1.6.

Table 10.1-4 Restoration of Contaminated Areas on Facility Grounds
(Work Days)
(Page 1 of 1)

Activity	Labor Category	Labor Category	Labor Category	Labor Category	Labor Category	Labor Category
Backfill and Restore Site (Note 1)	NA	NA	NA	NA	NA	NA
TOTAL						

Note:

1. European experience with the decommissioning of gas centrifuge uranium enrichment plants has been that there is no resulting radiological contamination of the facility grounds. Therefore, restoration of contaminated areas on the facility grounds will not be required and associated decommissioning provisions are not provided.

Table 10.1-5 Final Radiation Survey
(Page 1 of 1)

Activity	Cost ($000)	Labor Shift-Worker (Multi-Functional) (Man Days)	Labor Project Management (Man Days)	Labor Health Physics & Surveys (Man Days)	Activity Duration (Months)
Prepare Survey Plans and Grid Areas	621	439	334	360	8
Collect Survey Readings and Analyze Data (Note 1)	1713	1,261	343	1,013	16
Sample Analysis (Note 2)			535		
Final Status Survey Report and NRC Review	397	0	533	0	8
Confirmatory Survey and Report	264	0	355	0	6
Terminate Site License	132	0	178	0	2
TOTAL	3,127	1,700	2,278	1,373	(Note 3)

Notes:

1. The ≈ $1.7 million cost assigned to the conduct of the final radiation survey includes a cost of $460,250 to conduct the sampling and perform the sample analysis by a contractor. The sampling labor cost component ($56,250) was estimated assuming $75/hr (Health Physics & Surveys man-hour rate) for an estimated 500 samples with an average sample duration of 1.5 hours/sample. This results in approximately 100 man days of Health Physics & Surveys labor which is included in the 1013 man days of Health Physics & Surveys labor estimated.
2. For decommissioning funding purposes, it is assumed that 324 samples will be taken within the 242 ha (592 acre) EREF Restricted Area (area within the security fence). This is based on assuming a sampling grid pattern approximately 91 m by 91 m (100 yards by 100 yards). The grid is based on sampling experience of similar areas at decommissioned nuclear power plants. Outside of the Restricted Area, but within the site boundaries, the likelihood for contamination is extremely remote. Therefore, the grid will be expanded such that samples will be taken on a grid approximately 610 m by 610 m (667 yds by 667 yds). This results in a need for approximately 60 additional samples, bringing the total number of samples to 384. A total of 500 samples are assumed as a conservative measure and for consistency with the reference plant (i.e., NEF). The analysis cost component ($404,000) for the 500 samples was estimated using a conservative $796/sample based on recent actual 2008 lab analysis costs de-escalated to $2007. Because of the modeling for this activity, the sample analysis cost is expressed in terms of equivalent man-hours at the Project Management man-hour rate.
3. Some activities will be conducted in parallel to achieve a 36 month time frame.

Table 10.1-6 Site Stabilization and Long-Term Surveillance
(Work Days)
(Page 1 of 1)

Activity	Labor Category	Labor Category	Labor Category	Labor Category	Labor Category	Labor Category
(Note 1)	N/A	N/A	N/A	N/A	N/A	N/A

Note:

1. European experience with decommissioning gas centrifuge uranium enrichment plants has been that there is no resultant ground contamination. As a result, site stabilization and long-term surveillance will not be required and associated decommissioning provisions are not provided.

Table 10.1-7 Total Work Days by Labor Category
(Based on a 7.5 hr Working Day)
(Page 1 of 1)

Task	Shift-worker (multi-functional)	Craftsman	Supervision	Project Management	Health Physics & Surveys	Cleaner
Planning and Preparation (see Table 10.1-2)	82	0	0	1,969	144	0
Decontamination and/or Dismantling of Radioactive Facility Components (Note 2)	192,270	33,268	27,071	10,587	13,057	9,610
Restoration of Contaminated Areas on Facility Grounds (Note 1)(see Table 10.1-4)	0	0	0	0	0	0
Final Radiation Survey (see Table 10.1-5)	1,700	0	0	2,278	1,373	0
Site Stabilization and Long-Term Surveillance (Note 1) (see Table 10.1-6)	0	0	0	0	0	0

Notes:

1. European experience with the decommissioning of gas centrifuge uranium enrichment plants has been that there is no resulting radiological contamination of the facility grounds. Therefore, restoration of contaminated areas on the facility grounds and site stabilization and long-term surveillance will not be required and associated decommissioning provisions are not provided.
2. The values shown are inclusive of the Separations Building Module.

Table 10.1-8 Worker Unit Cost Schedule
(Page 1 of 1)

Labor Cost Component (Note 3)	Shift-worker (multi-functional)	Craftsman	Supervision	Project Management	Health Physics & Surveys	Cleaner
Salary & Fringe ($/year)	$82,597	$88,579	$117,286	$158,634	$120,419	$79,716
Overhead Rate (%) (Note 1)	excluded	excluded	excluded	excluded	excluded	excluded
Total Cost Per Year ($)	$82,597	$88,579	$117,286	$158,634	$120,419	$79,716
Total Cost/Work Day ($/day) (Note 2)	$387	$415	$550	$744	$564	$374

Notes:

1. Overhead charges are included in third party costs. See Table 10.1-14.
2. Based on 213.33 work days per year at 7.5 hrs a day (1600 hrs/yr).
3. Does not apply to Workers performing ETC scope of decommissioning work, i.e. decommissioning of classified equipment.

Table 10.1-9 Total Labor Cost by Major Decommissioning Task ($000)
(Page 1 of 1)

Task (Note 2)	Shift-worker (multi-functional)	Craftsman	Supervision	Project Management	Health Physics & Surveys	Cleaner
Planning and Preparation (see Table 10.1-2)	$32	0	0	$1,464	$81	0
Decontamination and/or Dismantling of Radioactive Facility Components	106,854	$ 13,814	$ 18,580	$ 7,810	$ 8,379	$ 5,341
Restoration of Contaminated Areas on Facility Grounds (see Table 10.1-4) (Note 1)	0	0	0	0	0	0
Final Radiation Survey (see Table 10.1-5)	$658	0	0	$1,694	$775	0
Site Stabilization and Long-Term Surveillance (see Table 10.1-6) (Note 1)	0	0	0	0	0	0

Notes:

1. European experience with the decommissioning of gas centrifuge uranium enrichment plants has been that there is no resulting radiological contamination of the facility grounds. Therefore, restoration of contaminated areas on the facility grounds and site stabilization and long-term surveillance will not be required and associated decommissioning provisions are not provided.

2. Labor costs include worker wages and benefits only. No profit or overhead costs are included.

Table 10.1-10 Packaging, Shipping, and Disposal of Radioactive Wastes (Excluding Labor Costs)

(Page 1 of 2)

(a) Waste Disposal Costs (includes packaging and shipping costs)

Materials	Disposal Volume ft^3 / (m^3) (Note 4)		Unit Cost ($/$ft^3$) (Note 4)	# of Containers (Note 2)	Total Disposal Costs ($000) (Note 4)
Other Buildings					
Miscellaneous low level waste	5,716	162	410	97	$2,346
Separation Modules:					
Solidified Liquid Wastes	30,512	864	410	519	$12,522
Centrifuge Components, Piping and Other Parts	15,044	426	410	256	$6,174
Aluminum (Note 3)	218,951	6,200	220	1,063	$48,193
TOTAL (Note 1)	270,223	7,652	-	1,935	$69,235

Notes

1. A revenue cap is imposed on the company that operates the US Ecology disposal facility for the Northwest Compact. On reaching this cap, facilities that dispose naturally occurring radioactive materials such as the EREF may be refunded a portion of their disposal costs. The projected costs do not include an allowance for potential refunds and are therefore conservative.
2. Assumes waste is shipped in Sea Land and B-25 containers and either direct buried or buried in the B-25 containers
3. Aluminum Waste is composed of smelted classified equipment (centrifuges).
4. The values provided for Disposal Volume in ft^3, Unit Cost, and Total Disposal Costs reflect rounding.

Table 10.1-10 Packaging, Shipping, and Disposal of Radioactive Wastes (Excluding Labor Costs)

(Page 2 of 2)

(b) Processing Costs

Materials	Disposal Weight tons / (Mt) (Note 2)		Unit Cost ($/lb) (Note 2)	Total Processing Costs ($000) (Note 2)
Aluminum	19,401	17,600	0.218	$8,510
Other materials	589	534	4.18	$4,924
TOTAL	19,989	18,134	-	$13,434

Note:

1. Processing costs represent those costs required to declassify the classified equipment.
2. The values provided for Disposal Volume in tons, Unit Cost, and Total Disposal Costs reflect rounding.

Table 10.1-11 Equipment and Supply Costs (Excluding Container Costs)
(Page 1 of 1)

(a) Equipment

Equipment	Quantity		Unit Cost ($/unit)	Total Cost Equipment ($000)
Separation Building Modules				
Dismantling and decontamination	90,462 ft^2	8,400 m^2	$1,682	$14,128
Special floor and vent system	90,462 ft^2	8,400 m^2	$320	$2,688
Plant equipment				
Basic decontamination equipment	2 lots (Note 1)		$653,154	$1,306
Decontamination line equipment	4 units		$4,255,136	$17,021
Evaporation installation	2 lots (Note 1)		$424,550	$849
Radiation and control equipment	2 lots (Note 1)		$446,322	$893
Electrical and Instrumentation				
Electrical system	2 lots (Note 1)		$544,295	$1,089
Instrumentation	2 lots (Note 1)		$642,268	$1,285
Design and Engineering				
Building	-		20% (Note 1)	$3,363
Plant and equipment	-		15% (Note 1)	$3,010
Electrical and Instrumentation	-		25% (Note 1)	$593
Other Buildings:				
Dismantling/Cleaning Tools, Equipment and Consumables	2 lots (Note 1)		$108,859	$218
TOTAL	-		-	$46,442

(b) Supply

Equipment	Quantity	Unit Cost ($/unit)	Total Cost Equipment ($000)
Electricity kWh (Note 4)	16,430,242	0.058	$953
Gas ft^3 (Note 2)	0	0	$0
Water ft^3 (Note 3)	150,000	0.058	$9
Materials	2 lots (Note 1)		$1,422
TOTAL	-	-	2,383

Notes:

1. Allocation based on European decommissioning experience. Quantities of electricity, gas, and materials required for the 6M SWU facilities are assumed to be twice the quantities required for a 3M SWU facility.
2. A natural gas pipeline is not available near the EREF and based on economic considerations, gas will not be brought to the site. Natural gas requirement of 16,900,000 ft^3 for a 3M SWU facility is based on European experience and is equivalent to 5,304,777 kWh of electricity. This value is added to the electricity needed based on European experience for decommissioning for a total of 8,215,121 kWh. This value is doubled for a 6M SWU facility.
3. Water cost is based on the cost for the electricity needed to pump 13,600 gal per day (1800 ft^3). This is a conservative figure that is based on the quantity of water required for the EREF 3M SWU facility while operating. The quantity estimated for a 3M SWU facility is sufficiently conservative to meet the requirements for a 6M SWU facility.
4. The cost for electricity is based on 2008 power rates provided by Rocky Mountain Power Co., Idaho Falls, Idaho.

Table 10.1-12 Laboratory Costs
(Page 1 of 1)

Activity	Quantity (Note 2)	Unit Cost {$)	Total Costs ($000)
Analysis of samples	1,862	$1,017	$1,894
Total			

Notes:

1. The sampling costs included in Table 10.1-12, "Laboratory Costs," are associated with the processing of the aluminum metal for disposal. The sampling costs are for the associated smelting option and the sampling necessary for comparison with radiological acceptance limits in the disposition of the material waste form. The unit cost for the sampling is the cost of performing the analysis using onsite laboratory equipment and assumes 8 samples for each of the estimated 931 batch melts.
2. The quantity required for a 6M SWU facility is assumed to be twice the quantity required for a 3M SWU facility.

Table 10.1-13 Period Dependent Costs
(Page 1 of 1)

Cost Item	Total Cost ($000)
License Fees	(Note 1)
Insurance	(Note 1)
Taxes	(Note 1)
Other	(Note 1)
TOTAL	$14,000

Note:

1. Period Dependent Costs include management, insurance, taxes, and other costs for the period beginning with the termination of operations of Separations Building Module 2 and the remaining plant facilities. This assumes $2,800,000 per year will be needed for each of the five years at the end of the project. It has been assumed that the period dependent decommissioning costs incurred during concurrent enrichment operations will be funded from operating plant funding and not the decommissioning trust fund.

Table 10.1-14 Total Decommissioning Costs
(Page 1 of 2) (Note 7)

Task/Components	Costs ($000)		Total ($000)	Percentage	Notes
	Separations Modules	Other Buildings			
Planning and Preparation (see Table 10.1-2)	$1,500	$0	$1,500	0%	1
Decontamination and Dismantling of Radioactive Facility Components (see Table 10.1-9)	$190,117	$3,173	$193,290	54%	8
Restoration of Contamination Areas on Facility Grounds (see Table 10.1-4)	$0	$0	$0	0%	2
Final Radiation Survey (see Table 10.1-5):	$3,127	$0	$3,127	1%	3
Cost of Third Party Use	$6,548	$4,490	$11,037	3%	11
Site Stabilization and Long-term Surveillance	$0	$0	$0	0%	4
Waste Processing Costs (see Table 10.1-10b)	$13,434	$0	$13,434	4%	5
Waste Disposal Costs (see Table 10.1-10a)	$66,890	$2,346	$69,235	19%	6
Equipment Costs (see Table 10.1-11a)	$46,225	$218	$46,442	13%	
Supply Costs (see Table 10.1-11b)	$2,383	$0	$2,383	1%	
Laboratory Costs (see Table 10.1-12)	$1,893	$0	$1,893	1%	
Period Dependent Costs (see Table 10.1-13)	$14,000	$0	$14,000	4%	
Total Decommissioning Cost	$346,116	$10,226	$356,342	100%	
Tails Disposition Cost			$2,462,407		9
Total of Decommissioning Cost + Tails Disposition Cost			$2,818,749		
Contingency (25% of total cost for decommissioning and tails disposition)			$704,687		
TOTAL			$3,523,436		10

Table 10.1-14 Total Decommissioning Costs
(Page 2 of 2) (Note 7)

Notes:

1. Includes planning, site characterization, Decommissioning Plan preparation, and NRC review for the entire plant.
2. European experience with the decommissioning of gas centrifuge uranium enrichment plants has been that there is no resulting radiological contamination of the facility grounds. Therefore, restoration of contaminated areas on the facility grounds will not be required and associated decommissioning provisions are not provided.
3. Includes the Final Radiation Survey, NRC review, confirmatory surveys and license termination for the entire plant.
4. Site stabilization and long-term surveillance will not be required.
5. Waste processing costs are based on commercial metal melting equipment and unit rates available from experience in Europe since ETC personnel and equipment will be used.
6. Includes waste packaging and shipping costs.
7. Approximately 97% of the decommissioning costs for the facility are attributed to the dismantling, decontamination, processing, and disposal of centrifuges and other equipment in the Separations Building Modules, which are considered classified. Given the classified nature of these buildings, the data presented in these Tables have been structured to meet the applicable NUREG-1757 recommendations, to the extent practicable. However, specific information such as numbers of components and unit rates has been intentionally excluded to protect the classified nature of the data. The remaining 3% of the decommissioning costs are for the remaining systems and components in Other Buildings.
8. The cost for Other Buildings includes the decontamination and dismantling of contaminated equipment in the TSB, Blending, Sampling, and Preparation Building, Centrifuge Assembly Building, and Gaseous Effluent Vent System.
9. Refer to Section 10.3, for Tails Disposition discussion.
10. Combined total for both decommissioning and tails disposition.
11. An adjustment has been applied to account for use of a third party for performing decommissioning operations associated with planning and preparation, decontamination and dismantling of radioactive facility components, and the final radiation survey. The adjustment includes an overhead rate on direct staff labor of 110%, plus 15% profit on labor and its overheads. As discussed in Section 10.1.4, labor costs associated with the decommissioning of classified components are excluded.

Table 10.1-15 Unit Cost Comparison
(Page 1 of 3)

Component	Decontamination Process Discussion	Unit Cost (2007 Dollars)			Unit Basis
		EREF	H3 Reference Lab (NUREG/CR-6477, Appendix D-1)	C14 Reference Lab (NUREG/CR-6477, Appendix D-1)	
Fume Hoods	Note 1	$2,179	$2,142	$2,155	Per hood
Lab Benches	Note 1	$1,042	$636	$2,062	Per bench
Sinks	Note 1	$632	N/A	$322	Per Sink
Ventilation Ductwork	Note 2	$128	$123	$119	Per meter of ductwork
Drains	Note 3	$635	N/A	N/A	Per drain
Ceilings	Note 4	$1	$45	$45	Per square meter
Floors	Note 4	$3	$52	$60	Per square meter
Walls	Note 4	$1	$41	$42	Per square meter
Storage Tanks	Note 5	$158	N/A	N/A	Per tank
Equipment/ Materials (e.g., stations, autoclaves)	Note 1, 6, 7	$73	N/A	N/A	Per piece
Storage Areas	Note 4	N/A	N/A	N/A	Per square meter
Other (tools and consumables used during decommissioning, e.g., screwdrivers, hammers, wrenches)	Note 1	$715	N/A	N/A	Per piece

Table 10.1-15 Unit Cost Comparison
(Page 2 of 3)

Notes:

1. Lab benches / Sinks / Fume Hoods/ Tools / Equipment / Materials

   Good radiological management procedures will be observed throughout operations within the Separation Building, Technical Support Building (TSB) and the final Decommissioning Facility consistent with AES commitments to maintain occupational doses and doses to members of the public as low as reasonably achievable (ALARA). Consequently contamination occurring on the working surfaces of lab benches / sinks / tools / fume hoods will be monitored, cleaned and maintained in good order through the day-to-day working operation. Therefore, at decommissioning, it is not anticipated that additional decontamination of these items will be required. The items will be dismantled, volume reduced, radiologically characterized and shipped to a licensed disposal facility. For the sinks in the final Decommissioning Facility, at the end of decommissioning, these sinks will be cleaned, volume reduced and shipped to a licensed disposal facility.

   Any contaminated tools, for which it proves not to be cost effective to maintain clean during operations, will be replaced with new tools during operations. Consequently, at close of operations only one set of tools will be required to be decontaminated and shipped to a licensed disposal facility.

2. Ventilation Ductwork

   Experience has shown ventilation ductwork to be only lightly contaminated. As such, the ductwork will be dismantled, volume reduced, radiologically characterized and shipped to a licensed disposal facility.

3. Drains

   There are no process drains in the EREF Separations Building. In the TSB, there are drains from all rooms where operations or processes of a potentially contaminated nature are undertaken to a liquid effluent collection and treatment room. These drains will be removed, decontaminated, volume reduced and shipped to a licensed disposal facility.

4. Floors, Walls, Ceilings and Storage Areas

   All floors, walls, ceilings in potentially contaminated areas are assumed to be contaminated. The estimates for cleaning of the floors, walls, and ceilings are consistent with similar work performed for decontamination of floors, walls, and ceilings at decommissioning nuclear power plants. The levels of contamination encountered during the decommissioning of nuclear power plants far exceed the levels anticipated at EREF; therefore, the estimates are conservative.

   Experience from European decommissioning of Separations Buildings has shown that there is no contamination on walls, ceilings and floors in the buildings at the end of their life. This has been confirmed by radiological characterization at the end of operations and at the end of building strip out prior to demolition. This lack of contamination results from the proven contained nature of the vacuum processes and good operational practices, including implementation of the ALARA program throughout the entire facility, which support maintenance of a clean facility throughout the operational life.

Table 10.1-15 Unit Cost Comparison
(Page 3 of 3)

5. Storage Tanks

   Storage tanks appear both in the TSB and in the final Decommissioning facility. Storage tanks include the open decontamination baths and closed tanks within the Liquid Effluent Collection and Treatment System. During operations these storage tanks are emptied, de-sludged and inspected (closed storage tanks through inspection hatches), routinely. The accumulation of sludge within the storage tanks during operation is not allowed due to criticality considerations. Consequently at the close of operations, the storage tanks are expected to be clean, emptied, inspected and in good order. Prior to removal from the facility, the storage tanks would be flushed in-situ, radiologically characterized, removed, volume reduced, and shipped to a licensed disposal facility. Therefore, extensive decontamination of the storage tanks at decommissioning is not anticipated. With respect to the TSB, all contaminated or potentially contaminated effluents are pumped to the liquid effluent treatment room.

6. Stations / Autoclaves

   Experience from the decommissioning of European Separations Buildings has shown that the cylinder stations, both take-off and feed, and liquid sampling autoclaves are free of contamination. Any small contamination levels, which may occur around the cylinder valve end of the station during change out procedures, are monitored and cleaned during operations consistent with AES commitments for implementation of the ALARA program. Therefore, decontamination of the cylinder stations and autoclaves at the end of their operational life is not required. The stations and autoclaves will be dismantled and shipped to a licensed disposal facility.

7. Cold Traps / Vacuum Pump Trap Sets / Centrifuge Feed and Take-off Vessels

   During decommissioning, cold traps, vacuum pump trap sets and centrifuge test facility vessels will be emptied of process material, purged, removed from the facility, cut open, decontaminated, volume reduced, and shipped to a licensed disposal facility.

Table 10.1-16 Cost Estimate for Decommissioning of the First Separations Building Module
(Page 1 of 1)

Table	Title	Cost ($000)	Notes
Table 10.1-2	Planning and Preparation	$600	40% of planning and preparation cost
Table 10.1-5	Final Radiation Survey	$585	Assumes 50% of Preparation Costs + Costs for 25% of samples within OCA
Table 10.1-10a	Waste Disposal Costs	$16,722	Assumes 25% of SBM disposal costs
Table 10.1-10b	Processing Costs	$3,358	Assumes 25% of Processing Costs associated with declassification of classified equipment
Table 10.1-11a	Equipment Costs	$23,112	Assumes 50% of Equipment Costs in Table 10.1-11a for SBMs
Table 10.1-11b	Supply Costs	$596	Assumes 25% of Supply Costs in Table 10.1-11b
Table 10.1-12	Laboratory Costs	$473	Assumes 25% of Laboratory Costs associated with sampling smelted metal
Table 10.1-13	Period Dependent Costs	$0	Period dependent costs are not applicable until facility is totally shutdown
Table 10.1-14	D&D Radioactive Facility Components	$47,529	Represents 25% of the D&D cost associated with the SBMs
Table 10.1-14	Third Party Cost	$1677	Third Party Cost applied to above Planning and Survey costs only
Total Cost to Decommission the 1st SBM		$94,653	
Cost to Decommission “Other Buildings”		$10,226	From Table 10.1-14, Total Decommissioning Cost, Other Buildings

Table 10.3-1 Tails Production and Buildup During 30-Year License Period
(Page 1 of 1)

		TAILS (MT U)		TAILS (MT DUF_6)		TAILS (48Y Cylinders)	
YEAR # after license is issued	Production (SWU) (Note 1)	Tails Storage (MT U)	Tails Storage Cumulative (MT U)	Tails Storage (MT DUF_6)	Tails Storage Cumulative (MT DUF_6)	48Y Tails Storage (no. Cyls.)	48Y Tails Storage Cumulative (no. Cyls)
1	0	0	0	0	0	0	0
2	0	0	0	0	0	0	0
3	825	1,291	1,291	1909	1909	153	153
4	1,650	2,581	3,872	3817	5727	306	459
5	2,475	3,871	7,743	5,725	11,452	459	918
6	3,300	5,161	12,904	7,633	19,085	611	1,529
7	4,125	6,451	19,355	9,541	28,627	764	2,293
8	4,950	7,741	27,096	11,449	40,076	917	3,210
9	5,775	9,031	36,127	13,357	53,433	1,069	4,279
10	6,600	10,322	46,449	15,267	68,699	1,222	5,501
11	6,600	10,322	56,771	15,267	83,966	1,222	6,723
12	6,600	10,322	67,093	15,267	99,232	1,222	7,945
13	6,600	10,322	77,415	15,267	114,499	1,222	9,167
14	6,600	10,322	87,737	15,267	129,765	1,222	10,389
15	6,600	10,322	98,059	15,267	145,032	1,222	11,611
16	6,600	10,322	108,381	15,267	160,298	1,222	12,833
17	6,600	10,322	118,703	15,267	175,565	1,222	14,055
18	6,600	10,322	129,025	15,267	190,832	1,222	15,277
19	6,600	10,322	139,347	15,267	206,098	1,222	16,499
20	6,600	10,322	149,669	15,267	221,365	1,222	17,721
21	6,600	10,322	159,991	15,267	236,631	1,222	18,943
22	6,600	10,322	170,313	15,267	251,898	1,222	20,165
23	6,600	10,322	180,635	15,267	267,164	1,222	21,387
24	5,775	9,031	189,666	13,357	280,521	1,069	22,456
25	4,950	7,742	197,408	11,451	291,972	917	23,373
26	4,125	6,451	203,859	9,541	301,513	764	24,137
27	3,300	5,161	209,020	7,633	309,146	611	24,748
28	2,475	3,871	212,891	5,725	314,872	459	25,207
29	1,650	2,581	215,472	3,817	318,689	306	25,513
30	894	1,398	216,870	2,068	320,757	166	25,679
31	138	215	217,085	318	321,075	26	25,705
32	69	108	217,193	160	321,235	13	25,718

Notes:

1. The production quantities provided in this table are based on a 30 year production life with appropriate ramp-up/ramp-down in capacity. This is conservative compared to a 30 year operating license for the facility which is assumed to incorporate periods of no production, i.e. during construction.

FIGURES

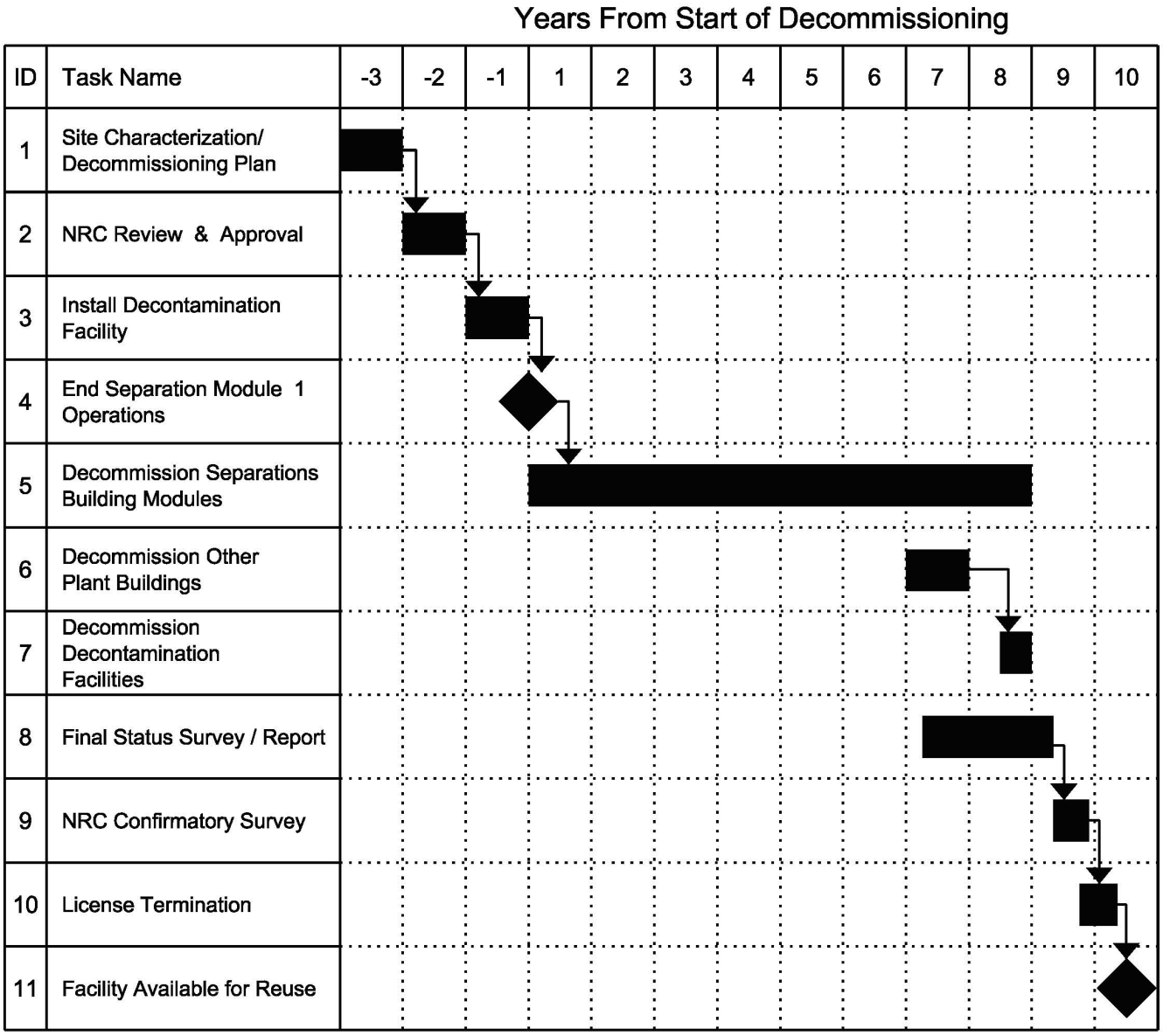

Figure 10.1-1 **Rev. 2**

Eagle Rock Enrichment Facility
Conceptual Decommissioning Schedule

EAGLE ROCK ENRICHMENT FACILITY
SAFETY ANALYSIS REPORT

APPENDIX 10A

IRREVOCABLE STANDBY LETTER OF CREDIT NO. [*INSERT NUMBER*]

This Credit Expires [*insert date*]

Issued To: U.S. Nuclear Regulatory Commission,

Washington, DC 20555

Dear Sir or Madam:

We hereby establish our Irrevocable Standby Letter of Credit No. [_____] in your favor, at the request and for the account of AREVA Enrichment Services, LLC (AES), [*insert address, and NRC license and docket numbers of licensee*] up to the aggregate amount of [*insert dollar amount in words*], U.S. dollars $ [_____, available upon presentation of:

(1) your sight draft, bearing reference to this Letter of Credit No. [_____], and

(2) your signed statement reading as follows: "I certify that the amount of the draft is payable pursuant to regulations issued under authority of the U.S. Nuclear Regulatory Commission."

This letter of credit is issued in accordance with regulations issued under the authority of the U.S. Nuclear Regulatory Commission (NRC), an agency of the U.S. Government, pursuant to the Atomic Energy Act of 1954, as amended, and the Energy Reorganization Act of 1974. NRC has promulgated regulations in title 10, Chapter I of the Code of Federal Regulations, Part 30, 40, and 70, which require that a holder of, or an applicant for, a materials license issued under 10 CFR Part 30, 40, and 70 provide assurance that funds will be available when needed for decommissioning.

This letter of credit is effective as of [*insert date*] and shall expire on [*insert date at least 1 year later*], but such expiration date shall be automatically extended for a period of [*insert time period of at least 1 year*] on [*insert date*] and on each successive expiration date, unless, at least 90 days before the current expiration date, we notify both you and AES, by certified mail, as shown on the signed return receipts. If AES is unable to secure alternative financial assurance to replace this letter of credit within 30 days of notification of cancellation, NRC may draw upon the full value of this letter of credit prior to cancellation. The bank shall give immediate notice to the applicant and NRC of any notice received or action filed alleging (1) the insolvency or bankruptcy of the financial institution or (2) any violation of regulatory requirements that could result in suspension or revocation of the bank's charter or license to do business. The financial institution also shall give immediate notice if the bank, for any reason, becomes unable to fulfill its obligation under the letter of credit.

Whenever this letter of credit is drawn on, under and in compliance with the terms of this letter of credit, we shall duly honor such draft upon its presentation to us within 30 days, and we shall deposit the amount of the draft directly into the standby trust fund of AES in accordance with your instructions.

Each draft must bear on its face the clause: "Drawn under Letter of Credit No. [_____], dated [_____, and the total of this draft and all other drafts previously drawn under this letter of credit does not exceed [*insert amount of letter of credit*].

[*Signature(s) and title(s) of official(s) of issuing institution*]

[*Name, address, and phone number of issuing institution*]

[*Date*]

This credit is subject to [*insert "the most recent edition of the Uniform Customs and Practice for Documentary Credits, published by the International Chamber of Commerce," or "the Uniform Commercial Code"*].

APPENDIX 10B

Standby Trust Agreement

TRUST AGREEMENT, the Agreement entered into as of [*insert date*] by and between AREVA Enrichment Services, LLC (AES), a Delaware limited liability corporation, herein referred to as the "Grantor," and [*insert name and address of a trustee acceptable to NRC*], the "Trustee."

WHEREAS, the U.S. Nuclear Regulatory Commission (NRC), an agency of the U.S.

Government, pursuant to the Atomic Energy Act of 1954, as amended, and the Energy

Reorganization Act of 1974 has promulgated regulations in Title 10, Chapter I, of the Code of Federal Regulations, Part 30, 40, and 70. These regulations, applicable to the Grantor, require that a holder of, or an applicant for, a materials license issued pursuant to 10 CFR Part 30, 40, and 70 provide assurance that funds will be available when needed for required decommissioning activities.

WHEREAS, the Grantor has elected to use a letter of credit to provide all of such financial assurance for the facilities identified herein; and

WHEREAS, when payment is made under a letter of credit, this standby trust shall be used for the receipt of such payment; and

WHEREAS, the Grantor, acting through its duly authorized officers, has selected the Trustee to be the trustee under this Agreement, and the Trustee is willing to act as trustee;

NOW, THEREFORE, the Grantor and the Trustee agree as follows:

Section 1. Definitions. As used in this Agreement:

(a) The term "Grantor" means the NRC licensee who enters into this Agreement and any successors or assigns of the Grantor.

(b) The term "Trustee" means the trustee who enters into this Agreement and any successor trustee.

Section 2. Costs of Decommissioning. This Agreement pertains to the costs of decommissioning the materials and activities identified in License Number [*insert license number*] issued pursuant to 10 CFR Part 30, 40, and 70, as shown in Schedule A.

Section 3. Establishment of Fund. The Grantor and the Trustee hereby establish a standby trust fund (the Fund) for the benefit of NRC. The Grantor and the Trustee intend that no third party shall have access to the Fund except as provided herein.

Section 4. Payments Constituting the Fund. Payments made to the Trustee for the Fund shall consist of cash, securities, or other liquid assets acceptable to the Trustee. The Fund is established initially as consisting of the property, which is acceptable to the Trustee, described in Schedule B attached hereto. Such property and any other property subsequently transferred to the Trustee are referred to as the "Fund," together with all earnings and profits thereon, less any payments or distributions made by the Trustee pursuant to this Agreement. The Fund shall be held by the Trustee, IN TRUST, as hereinafter provided. The Trustee shall not be responsible nor shall it undertake any responsibility for the amount of, or adequacy of the Fund, nor any duty to collect from the Grantor, any payments necessary to discharge any liabilities of the Grantor established by NRC.

Section 5. Payment for Required Activities Specified in the Plan. The Trustee shall make payments from the Fund to the Grantor upon presentation to the Trustee of the following:

(a) A certificate duly executed by the Secretary of the Grantor attesting to the occurrence of the events, and in the form set forth in the attached Certificate of Events, and

(b) A certificate attesting to the following conditions:

(1) that decommissioning is proceeding pursuant to an NRC-approved plan;

(2) that the funds withdrawn will be expended for activities undertaken pursuant to that plan; and

(3) that NRC has been given 30 days prior notice of AES's intent to withdraw funds from the trust fund.

No withdrawal from the Fund for a particular license can exceed 10 percent of the remaining funds available for that license unless NRC written approval is attached.

In addition, the Trustee shall make payments from the Fund as NRC shall direct, in writing, to provide for the payment of the costs of required activities covered by this Agreement. The Trustee shall reimburse the Grantor or other persons as specified by NRC from the Fund for expenditures for required activities in such amounts as NRC shall direct in writing. In addition, the Trustee shall refund to the Grantor such amounts as NRC specifies in writing. Upon refund, such funds shall no longer constitute part of the Fund as defined herein.

Section 6. Trust Management. The Trustee shall invest and reinvest the principal and income of the Fund and keep the Fund invested as a single fund, without distinction between principal and income, in accordance with general investment policies and guidelines which the Grantor may communicate in writing to the Trustee from time to time, subject, however, to the provisions of this section. In investing, reinvesting, exchanging, selling, and managing the Fund, the Trustee shall discharge its duties with respect to the Fund solely in the interest of the beneficiary and with the care, skill, prudence and diligence under the circumstances then prevailing which persons of prudence, acting in a like capacity and familiar with such matters, would use in the conduct of an enterprise of a like character and with like aims, except that:

(a) Securities or other obligations of the Grantor, or any other owner or operator of the facilities, or any of their affiliates as defined in the Investment Company Act of 1940, as amended (15 U.S.C. 80a-2(a)), shall not be acquired or held, unless they are securities or other obligations of the Federal or a State government;

(b) The Trustee is authorized to invest the Fund in time or demand deposits of the Trustee, to the extent insured by an agency of the Federal government, and in obligations of the Federal government such as GNMA, FNMA, and FHLM bonds and certificates or State and Municipal bonds rated BBB or higher by Standard & Poor's or Baa or higher by Moody's Investment Services; and

(c) For a reasonable time, not to exceed 60 days, the Trustee is authorized to hold uninvested cash, awaiting investment or distribution, without liability for the payment of interest thereon.

Section 7. Commingling and Investment. The Trustee is expressly authorized in its discretion:

(a) To transfer from time to time any or all of the assets of the Fund to any common, commingled, or collective trust fund created by the Trustee in which the Fund is eligible to participate, subject to all of the provisions thereof, to be commingled with the assets of other trusts participating therein; and

(b) To purchase shares in any investment company registered under the Investment Company Act of 1940 (15 U.S.C. 80a-1 et seq.), including one that may be created, managed, underwritten, or to which investment advice is rendered, or the shares of which are sold by the Trustee. The Trustee may vote such shares in its discretion.

Section 8. Express Powers of Trustee. Without in any way limiting the powers and discretion conferred upon the Trustee by the other provisions of this Agreement or by law, the Trustee is expressly authorized and empowered:

(a) To sell, exchange, convey, transfer, or otherwise dispose of any property held by it, by public or private sale, as necessary to allow duly authorized withdrawals at the joint request of the Grantor and NRC or to reinvest in securities at the direction of the Grantor;

(b) To make, execute, acknowledge, and deliver any and all documents of transfer and conveyance and any and all other instruments that may be necessary or appropriate to carry out the powers herein granted;

(c) To register any securities held in the Fund in its own name, or in the name of a nominee, and to hold any security in bearer form or in book entry, or to combine certificates representing such securities with certificates of the same issue held by the Trustee in other fiduciary capacities, to reinvest interest payments and funds from matured and redeemed instruments, to file proper forms concerning securities held in the Fund in a timely fashion with appropriate government agencies, or to deposit or arrange for the deposit of such securities in a qualified central depository even though, when so deposited, such securities may be merged and held in bulk in the name of the nominee or such depository with other securities deposited therein by another person, or to deposit or arrange for the deposit of any securities issued by the U.S. Government, or any agency or instrumentality thereof, with a Federal Reserve Bank, but the books and records of the Trustee shall at all times show that all such securities are part of the Fund;

(d) To deposit any cash in the Fund in interest-bearing accounts maintained or savings certificates issued by the Trustee, in its separate corporate capacity, or in any other banking institution affiliated with the Trustee, to the extent insured by an agency of the Federal government; and

(e) To compromise or otherwise adjust all claims in favor of or against the Fund.

Section 9. Taxes and Expenses. All taxes of any kind that may be assessed or levied against or in respect of the Fund and all brokerage commissions incurred by the Fund shall be paid from the Fund. All other expenses incurred by the Trustee in connection with the administration of this Trust, including fees for legal services rendered to the Trustee, the compensation of the Trustee to the extent not paid directly by the Grantor, and all other proper charges and disbursements of the Trustee shall be paid from the Fund.

Section 10. Annual Valuation. After payment has been made into this standby trust fund, the Trustee shall annually, at least 30 days before the anniversary date of receipt of payment into the standby trust fund, furnish to the Grantor and to NRC a statement confirming the value of the Trust. Any securities in the Fund shall be valued at market value as of no more than 60 days before the anniversary date of the establishment of the Fund. The failure of the Grantor to object in writing to the Trustee within 90 days after the statement has been furnished to the Grantor and NRC shall constitute a conclusively binding assent by the Grantor, barring the Grantor from asserting any claim or liability against the Trustee with respect to the matters disclosed in the statement.

Section 11. Advice of Counsel. The Trustee may from time to time consult with counsel with respect to any question arising as to the construction of this Agreement or any action to be taken hereunder. The Trustee shall be fully protected, to the extent permitted by law, in acting on the advice of counsel.

Section 12. Trustee Compensation. The Trustee shall be entitled to reasonable compensation for its services as agreed upon in writing with the Grantor. (See Schedule C.)

Section 13. Successor Trustee. Upon 90 days notice to NRC and the Grantor, the Trustee may resign; upon 90 days notice to NRC and the Trustee, the Grantor may replace the Trustee; but such resignation or replacement shall not be effective until the Grantor has appointed a successor Trustee, the successor accepts the appointment, the successor is ready to assume its duties as trustee, and NRC has agreed, in writing, that the successor is an appropriate Federal or State government agency or an entity that has the authority to act as a trustee and whose trust operations are regulated and examined by a Federal or State agency. The successor Trustee shall have the same powers and duties as those conferred upon the Trustee hereunder. When the resignation or replacement is effective, the Trustee shall assign, transfer, and pay over to the successor Trustee the funds and properties then constituting the Fund. If for any reason the Grantor cannot or does not act in the event of the resignation of the Trustee, the Trustee may apply to a court of competent jurisdiction for the appointment of a successor Trustee or for instructions. The successor Trustee shall specify the date on which it assumes administration of the trust, in a writing sent to the Grantor, NRC, and the present Trustee, by certified mail 10 days before such change becomes effective. Any expenses incurred by the Trustee as a result of any of the acts contemplated by this section shall be paid as provided in Section 9.

Section 14. Instructions to the Trustee. All orders, requests, and instructions by the Grantor to the Trustee shall be in writing, signed by such persons as are signatories to this Agreement or such other designees as the Grantor may designate in writing. The Trustee shall be fully protected in acting without inquiry in accordance with the Grantor's orders, requests, and instructions. If NRC issues orders, requests, or instructions to the Trustee these shall be in writing, signed by NRC or its designees, and the Trustee shall act and shall be fully protected in acting in accordance with such orders, requests, and instructions. The Trustee shall have the right to assume, in the absence of written notice to the contrary, that no event constituting a change or a termination of the authority of any person to act on behalf of the Grantor or NRC hereunder has occurred. The Trustee shall have no duty to act in the absence of such orders, requests, and instructions from the Grantor and/or NRC, except as provided for herein.

Section 15. Amendment of Agreement. This Agreement may be amended by an instrument in writing executed by the Grantor, the Trustee, and NRC, or by the Trustee and NRC if the Grantor ceases to exist. All amendments shall meet the relevant regulatory requirements of NRC.

Section 16. Irrevocability and Termination. Subject to the right of the parties to amend this Agreement as provided in Section 15, this trust shall be irrevocable and shall continue until terminated at the written agreement of the Grantor, the Trustee, and NRC, or by the Trustee and NRC if the Grantor ceases to exist. Upon termination of the trust, all remaining trust property, less final trust administration expenses, shall be delivered to the Grantor or its successor.

Section 17. Immunity and Indemnification. The Trustee shall not incur personal liability of any nature in connection with any act or omission, made in good faith, in the administration of this trust, or in carrying out any directions by the Grantor or NRC issued in accordance with this Agreement. The Trustee shall be indemnified and saved harmless by the Grantor or from the trust fund, or both, from and against any personal liability to which the Trustee may be subjected by reason of any act or conduct in its official capacity, including all expenses reasonably incurred in its defense in the event the Grantor fails to provide such defense.

Section 18. This Agreement shall be administered, construed, and enforced according to the laws of the State of [*insert name of State*].

Section 19. Interpretation and Severability. As used in this Agreement, words in the singular include the plural and words in the plural include the singular. The descriptive headings for each section of this Agreement shall not affect the interpretation or the legal efficacy of this Agreement. If any part of this Agreement is invalid, it shall not affect the remaining provisions which will remain valid and enforceable.

IN WITNESS WHEREOF the parties have caused this Agreement to be executed by the respective officers duly authorized and the incorporate seals to be hereunto affixed and attested as of the date first written above.

[*Insert name of licensee (Grantor)*]

[*Signature of representative of Grantor*]

[*Title*]

ATTEST:

[*Title*]

[*Seal*]

[*Insert name and address of Trustee*]

[*Signature of representative of Trustee*]

[*Title*]

ATTEST:

[*Title*]

[*Seal*]

APPENDIX 10C

STANDBY TRUST AGREEMENT SCHEDULES

Schedule A

This Agreement demonstrates financial assurance for the following cost estimates or prescribed amounts for the following licensed activities:

U.S. NUCLEAR REGULATORY COMMISSION LICENSE NUMBER(S)	NAME AND ADDRESS OF LICENSEE	ADDRESS OF LICENSED ACTIVITY	COST ESTIMATES FOR REGULATORY ASSURANCES DEMONSTRATED BY THIS AGREEMENT

The cost estimates listed here were last adjusted and approved by NRC on [insert date].

Schedule B

DOLLAR AMOUNT _____

AS EVIDENCED BY _____

Schedule C

[Insert name, address, and phone number of Trustee]

Trustee's fees shall be $____per year.

APPENDIX 10D

SPECIMEN CERTIFICATE OF EVENTS

[Insert name and address of trustee]

Attention: Trust Division

Gentlemen:

In accordance with the terms of the Agreement with you dated [_____], I, [_____], Secretary of AREVA Enrichment Services, LLC (AES), hereby certify that the following events have occurred:

1. AES is required to commence the decommissioning of its facility located at Bonneville County, Idaho (hereinafter called the decommissioning).

2. The plans and procedures for the commencement and conduct of the decommissioning have been approved by the United States Nuclear Regulatory Commission, or its successor, on [_____] (copy of approval attached).

3. The Board of Directors of AES has adopted the attached resolution authorizing the commencement of the decommissioning.

_____

Secretary of AREVA Enrichment Services, LLC.

_____

Date

APPENDIX 10E

SPECIMEN CERTIFICATE OF RESOLUTION

I, [_____], do hereby certify that I am Secretary of AREVA Enrichment Services, LLC, a Delaware limited liability corporation, and that the resolution listed below was duly adopted at a meeting of this Corporation's Board of Directors on _____ 20_____.

IN WITNESS WHEREOF, I have hereunto signed my name and affixed the seal of this Corporation this [_____] day of _____20_____.

_____

Secretary of AREVA Enrichment Services, LLC

RESOLVED, that this Board of Directors hereby authorizes the President, or such other employee of AREVA Enrichment Services, LLC., as he may designate, to commence decommissioning activities at the Eagle Rock Enrichment Facility in accordance with the terms and conditions described to this Board of Directors at this meeting and with such other terms and conditions as the President shall approve with and upon the advice of Counsel.

APPENDIX 10F

LETTER OF ACKNOWLEDGMENT

STATE OF [_____]

To Wit: [_____]

CITY OF [_____]

On this [_____] day of [_____], before me, a notary public in and for the city and State aforesaid, personally appeared [_____], and she/he did depose and say that she/he is

the *[insert title]* of *[if applicable, insert , national banking association or; State banking association],* Trustee, which executed the above instrument; that she/he knows the seal of said association; that the seal affixed to such instrument is such corporate seal; that it was so affixed by order of the association; and that she/he signed her/his name thereto by like order.

_____

[Signature of notary public]

My Commission Expires:_____

[Date

TABLE OF CONTENTS

Page

11.0 MANAGEMENT MEASURES 11.1-1

11.1 CONFIGURATION MANAGEMENT (CM) 11.1-2

11.1.1 Configuration Management Policy 11.1-2

11.1.2 Design Requirements 11.1-7

11.1.3 Document Control 11.1-10

11.1.4 Change Control 11.1-11

11.2 MAINTENANCE 11.2-14

11.2.1 Surveillance/Monitoring 11.2-16

11.2.2 Corrective Maintenance 11.2-16

11.2.3 Preventive Maintenance 11.2-17

11.2.4 Functional Testing 11.2-17

11.3 TRAINING AND QUALIFICATIONS 11.3-26

11.3.1 Organization and Management of the Training Function 11.3-26

11.3.2 Analysis and Identification of Functional Areas Requiring Training 11.3-27

11.3.3 Position Training Requirements 11.3-27

11.3.4 Basis and Objectives for Training 11.3-34

11.3.5 Organization of Instruction, Using Lesson Plans and Other Training Guides 11.3-34

11.3.6 Evaluation of Trainee Learning 11.3-35

11.3.7 Conduct of On-the-Job Training 11.3-35

11.3.8 Evaluation of Training Effectiveness 11.3-35

11.3.9 Personnel Qualification 11.3-36

11.3.10 Periodic Personnel Evaluations 11.3-36

11.4 PROCEDURES DEVELOPMENT AND IMPLEMENTATION 11.4-37

11.4.1 Preparation of Procedures 11.4-39

11.4.2 Administrative Procedures 11.4-39

11.4.3 Procedures 11.4-40

11.4.4 Changes to Procedures 11.4-42

11.4.5 Distribution of Procedures 11.4-43

11.5 AUDITS AND ASSESSMENTS 11.5-44

11.5.1 Activities to be Audited or Assessed 11.5-45

11.5.2 Scheduling of Audits and Assessments 11.5-45

TABLE OF CONTENTS
(cont'd)

Page

11.5.3 Procedures for Audits and Assessments 11.5-45
11.5.4 Qualifications and Responsibilities for Audits and Assessments 11.5-46
11.6 INCIDENT INVESTIGATIONS AND CORRECTIVE ACTION PROCESS .. 11.6-48
11.6.1 Incident Investigations 11.6-48
11.6.2 Corrective Action Process 11.6-49
11.7 RECORDS MANAGEMENT 11.7-51
11.8 OTHER QA ELEMENTS 11.8-54
11.9 REFERENCES 11.9-56

LIST OF TABLES

None

LIST OF FIGURES

None

11.0 MANAGEMENT MEASURES

The management measures described in this license application are similar to those submitted for Nuclear Regulatory Commission (NRC) review in the LES license application for the National Enrichment Facility (NEF) (LES, 2005). The staff reviewed the NEF plans and commitments and concluded in the Safety Evaluation Report (SER) (NRC, 2005) that they provided assurance that IROFS will be available and reliable, consistent with the performance requirements of 10 CFR 70.61 (CFR, 2008a). The key differences between the EREF and NEF with respect to management measures are: 1) The changes to the QAPD, including the quality Level descriptions; and 2) The organization adopted by the EREF organization as described in SAR Chapter 2, Organization and Administration.

Management measures are functions applied to QA Level 1 and QA Level 2 items and activities as defined in the Quality Assurance Program Description (QAPD). These measures provide reasonable assurance that they are available and able to perform their functions when needed. QA Level 1 items and activities include those items and activities whose failure or malfunction could directly result in a condition that adversely affects public, worker and the environment as described in 10 CFR 70.61 (CFR, 2008a). The failure of a single QA Level 1 item could result in a high or intermediate consequence.

QA Level 2 items and activities include those items and activities whose failure or malfunction could indirectly result in a condition that adversely affects public, worker and the environment as described in 10 CFR 70.61 (CFR, 2008a). The failure of a QA Level 2 item, in conjunction with the failure of an additional item, could result in a high or intermediate consequence. All building and structure IROFS associated with credible external events are QA Level 2. QA Level 2 items and activities also include those attributes of items and activities that could interact with IROFS due to a seismic event, and result in high or intermediate consequences as described in 10 CFR 70.61 (CFR, 2008a).

This chapter addresses each of the management measures included in the 10 CFR 70.4 (CFR, 2008h) definition of management measures.

Management measures are implemented through a quality assurance (QA) program described in the AREVA Enrichment Services, LLC (AES) QAPD. The QA program also provides additional measures for ensuring that the design, construction, operation and decommissioning of QA Level 1 and QA Level 2 items and activities are controlled commensurate with their importance to safety.

AES maintains full responsibility for assuring that the Eagle Rock Enrichment Facility (EREF) is designed, constructed, tested, and operated in conformance with good engineering practices, applicable regulatory requirements and specified design requirements and in a manner to protect the health and safety of the public. The management measures described herein meet the requirements of 10 CFR 70.62(d) (CFR, 2008g) and are applied, as appropriate, during design, construction, pre-operational testing, and operation of the facility. AES and its contractors implement these management measures through the use of approved procedures. The information provided in this chapter, the corresponding regulatory requirement, and the section of NUREG-1520 (NRC, 2002), Chapter 11 in which the NRC acceptance criteria are presented is summarized below.

Information Category and Requirement	10 CFR 70 Citation	NUREG-1520 Chapter 11 Reference
Section 11.1 Configuration Management	70.62(d) & 70.72	11.4.3.1
Section 11.2 Maintenance	70.62(d)	11.4.3.2
Section 11.3 Training and Qualifications	70.62(d) & 10CFR19	11.4.3.3
Section 11.4 Procedures Development and Implementation	70.62(d) & 70.22(a)(8)	11.4.3.4
Section 11.5 Audits and Assessments	70.62(d)	11.4.3.5
Section 11.6 Incident Investigations and Corrective Action Process	70.74(a)&(b) 70.62(a)(3)	11.4.3.6
Section 11.7 Records Management	70.62(a)(2)&(3) 70.62(d)	11.4.3.7
Section 11.8 Other QA Elements	70.62(d)	11.4.3.8
Appendix A: AES QA Program Description	70.62(d)	11.4.3.8

11.1 CONFIGURATION MANAGEMENT (CM)

This section describes the configuration management program for the EREF. Configuration management for the EREF is implemented through requirements of the QA Program and associated procedures.

The AES President is responsible for establishment and implementation of the AES QA Program. He is the highest level of management responsible for establishing and meeting AES's QA policies, goals, and objectives. The AES organization during the design, construction and operation phases, including QA, is presented in Chapter 2, Organization and Administration.

11.1.1 Configuration Management Policy

Configuration management is provided throughout facility design, construction, testing, and operation. Configuration management provides the means to establish and maintain a technical baseline for the facility based on clearly defined requirements. During design and construction, the AES Project Manager has overall responsibility for configuration management by the design control process. Documentation that is determined to have the ability to create a change to the site, structures, processes, systems, equipment, components, computer programs, and activities of personnel, including the integrated safety analysis (ISA), are controlled under the

configuration management system in accordance with approved AES procedures. Design changes undergo formal review, including interdisciplinary reviews as appropriate, in accordance with these procedures. These interdisciplinary reviews include, as a minimum, the review for ISA impacts.

Configuration management provides the means to establish and maintain the essential features of the design basis of QA Level 1 and QA Level 2 items and activities, including the ISA. As the project progresses from the design and construction phase to the operation phase, configuration management is maintained by the Engineering organization as the overall focus of activities changes. Procedures will define the turnover process and responsibilities as construction continues on new work modules during operation.

During the design phase of the project, configuration management is based on the design control provisions and associated procedural controls over design documents to establish and maintain the technical baseline. Design documents, including the ISA, provide design input, design analysis, or design results specifically for QA Level 1 and QA Level 2 items and activities and are identify the appropriate QA Level. These design documents undergo interdisciplinary review during the initial issue and during each subsequent revision. During the construction phase of the project, changes to drawings and specifications issued for construction, procurement, or fabrication are systematically reviewed and verified, evaluated for impact, including impact to the ISA, and approved prior to implementation. Proper implementation is verified and reflected in the design basis documentation.

In order to provide for the continued safe and reliable operation of the facility structures, systems and components, measures are implemented to ensure that the quality of these structures, systems and components is not compromised by planned changes (modifications). After issuance of the Operating License, the Engineering Manager is responsible for the design of and modifications to facility structures, systems or components. The design and implementation of modifications are performed in a manner so as to assure quality is maintained in a manner commensurate with the remainder of the system which is being modified, or as dictated by applicable regulations.

The administrative instructions for modifications during the operations phase are contained in procedures that are approved, including revisions, by the Engineering Manager. The modification procedure contains the following items necessary to ensure quality in the modification program:

- The technical and quality requirements which shall be met to implement a modification
- The requirements for initiating, approving, monitoring, designing, verifying, and documenting modifications. The facility modification procedure shall be written to ensure that policies are formulated and maintained to satisfy the AES QA Program, as applicable.

Each change to the facility or to activities of personnel shall have an evaluation performed in accordance with the requirements of 10 CFR 70.72 (CFR, 2008b), as applicable. Each modification shall also be evaluated for any required changes or additions to the facility's procedures, personnel training, testing program, or regulatory documents.

For any change (i.e., new design or operation, or modification to the facility or to activities of personnel, e.g., site structures, systems, components, computer programs, processes, operating procedures, management measures), that involves or could affect uranium on site, a Nuclear Criticality Safety (NCS) evaluation and, if required, an NCS analysis shall be prepared and approved. Prior to implementing the change, it shall be determined that the entire process will be subcritical (with applicable margin for safety) under both normal and credible abnormal conditions.

Each modification is also evaluated and documented for radiation exposure to minimize worker exposures in keeping with the facility as low as reasonably achievable (ALARA) program, criticality and worker safety requirements and/or restrictions. Other areas of consideration in evaluating modifications may include, but are not limited to the review of:

- Modification cost
- Lessons learned from similar completed modifications
- QA requirements
- Potential operability or maintainability concerns
- Constructability concerns
- Post-modification testing requirements
- Environmental considerations
- Human factors
- Integrated safety analysis.

After completion of a modification to a structure, system, or component, the Engineering Manager, or designee, shall ensure that all applicable testing has been completed to ensure correct operation of the system(s) affected by the modification and documentation regarding the modification is complete. In order to ensure operators are able to operate a modified system safely, when a modification is complete, all documents necessary, e.g., the revised process description, checklists for operation and flowsheets are made available to operations and maintenance departments prior to the start-up of the modified system. Appropriate training on the modification is completed before a system is placed in operation. A formal notice of a modification being completed is distributed to all appropriate managers. As-built drawings incorporating the modification are completed in accordance with the design control procedures. These records shall be identifiable and shall be retained in accordance with the records management procedures.

11.1.1.1 Scope of Structures, Systems, and Components

The scope of SSC's under configuration management includes all QA Level 1 and QA Level 2 items and activities. Design documents subject to configuration management include calculations, safety analyses, design criteria, engineering drawings, system descriptions, technical documents, and specifications that establish design requirements for QA Level 1 and QA Level 2 items and activities. During the design phase, these design documents are maintained under configuration management when initially approved.

The scope of documents included in the configuration management program expands throughout the design process. As drawings and specification sections related to QA Level 1 and QA Level 2 items and activities are prepared and issued for procurement, fabrication, or construction, these documents are included in configuration management.

During construction, initial startup, and operations, the scope of documents under configuration management similarly expands to include, as appropriate: vendor data; test data; inspection data; initial startup, test, operating and administrative procedures as applicable to QA Level 1 and QA Level 2 items and activities; and nonconformance reports. These documents include documentation related to QA Level 1 and QA Level 2 items and activities that is generated through functional interfaces with QA, maintenance, and training and qualifications of personnel.

Configuration management procedures will provide for evaluation, implementation, and tracking of changes to QA Level 1 and QA Level 2 items and activities, and processes, equipment, computer programs, and activities of personnel that impact QA Level 1 and QA Level 2 items and activities.

11.1.1.2 Interfaces with Other Management Measures

Configuration management is implemented through or otherwise related to other management measures. Key interfaces and relationships to other management measures are described below:

- **Quality Assurance -** The QA program establishes the framework for configuration management and other management measures for QA Level 1 and QA Level 2 items and activities.
- **Records Management -** Records associated with QA Level 1 and QA Level 2 items and activities are generated and processed in accordance with the applicable requirements of the QA Program and provide evidence of the conduct of activities associated with the configuration management of those QA Level 1 and QA Level 2 items and activities.
- **Maintenance -** Maintenance requirements are established as part of the design basis, which is controlled under configuration management. Maintenance records for QA Level 1 and QA Level 2 items and activities provide evidence of compliance with preventative and corrective maintenance schedules.
- **Training and Qualifications -** Training and qualification are controlled in accordance with the applicable provisions of the QA Program. Personnel qualifications and/or training to specific processes and procedures are management measures that support the safe operation, maintenance, or testing of QA Level 1 and QA Level 2 items and activities. Also, work activities that are themselves QA Level 1 or QA Level 2 items and activities, (i.e., administrative controls) are proceduralized, and personnel are trained and qualified to these procedures. Training and qualification requirements and documentation of training may be considered part of the design basis controlled under configuration management. Reference Sections 11.3.2, Analysis and Identification of Functional Areas Requiring Training, and 11.3.3, Position Training Requirements, for interfaces with configuration management.
- **Incident Investigation/Audits and Assessments -** Audits, assessments, and incident investigations are described in Sections 11.5, Audits and Assessments, and 11.6, Incident Investigations and Corrective Action Process. Corrective actions identified as a result of these management measures may result in changes to design features, administrative controls, or other management measures (e.g., operating procedures). The Corrective Action Program (CAP) is described in Section 11.6, Incident Investigations and Corrective Action Process. Changes are evaluated under the provisions of configuration management through the QA Program and procedures. Periodic assessments of the configuration management program are also conducted in accordance with the audit and assessment program described in Section 11.5.
- **Procedures -** Operating, administrative, maintenance, and emergency procedures are used to conduct various operations associated with QA Level 1 and QA Level 2 items and activities and will be reviewed for potential impacts to the design basis. Also, work activities that are themselves designated as QA Level 1 or QA Level 2 (i.e., administrative controls) are contained in procedures.

11.1.1.3 Objectives of Configuration Management

The objectives of configuration management are to ensure design and operation within the design basis of QA Level 1 and QA Level 2 items and activities by: identifying and controlling preparation and review of documentation associated with QA Level 1 and QA Level 2 items and activities; controlling changes to QA Level 1 and QA Level 2 items and activities; and maintaining the physical configuration of the facility consistent with the approved design.

The ETC technology transfer documentation provides the enrichment plant design, and identifies those safety trips and features credited in the European safety analyses for the core process technology. AES has contracted with an architect/engineering firm to provide preliminary design for supporting structures and systems including those credited in the safety analyses. The ISA of the design bases determines the IROFS and establishes the safety function(s) associated with procedures for controlling design, including preparation, review (including interdisciplinary review), design verification where appropriate, approval, and release and distribution for use. These determinations will be reviewed, verified or modified as necessary after detailed design is available. The detailed design will also establish the design bases for non-IROFS QA Level 1 and QA Level 2 items and activities. Engineering documents will be assessed for QA Level classification. Changes to the approved design are subject to a review to ensure consistency with the design bases of QA Level 1 and QA Level 2 items and activities. Configuration verification is also accomplished through design verification, which ensures that design documents are consistent and that design requirements for QA Level 1 and QA Level 2 items and activities are met. During construction and testing, this verification also extends to verification that as-built configurations are consistent with the design, and that testing that is specified to demonstrate performance of QA Level 1 and QA Level 2 items and activities is accomplished successfully. Periodic audits and assessments of the configuration management program and of the design confirm that the system meets its goals and that the design is consistent with the design bases. The corrective action process occurs in accordance with the AES QA Program and associated procedures in the event problems are identified. Prompt corrective actions are developed as a result of incident investigations or in response to audit or assessment results.

11.1.1.4 Description of Configuration Management Activities

Configuration management includes those activities conducted under design control provisions for ensuring that design and construction documentation is prepared, reviewed, and approved in accordance with a systematic process. This process includes interdisciplinary reviews appropriate to ensure consistency between the design and the design bases of QA Level 1 and QA Level 2 items and activities. During construction, it also includes those activities that ensure that construction is consistent with design documents. Finally, it includes activities that provide for operation of the QA Level 1 and QA Level 2 items and activities in accordance with the limits and constraints established in the ISA, and that provide for control of changes to the facility in accordance with 10 CFR 70.72 (CFR, 2008b).

Configuration management also includes records to demonstrate that personnel conducting activities that are associated with QA Level 1 and QA Level 2 items and activities are appropriately qualified and trained to conduct that work.

Implementing documents are controlled within the document control system. These documents support configuration management by ensuring that only reviewed and approved procedures, specifications and drawings are used for procurement, construction, installation, testing, operation, and maintenance of QA Level 1 and QA Level 2 items and activities, as appropriate.

11.1.1.5 Organizational Structure and Staffing Interfaces

The configuration management program is administered by the Engineering organization during design, construction and operations. Engineering includes engineering disciplines with responsible lead engineers in charge of each discipline, under the direction of design managers or task managers who report to the Engineering Manager. The lead discipline engineers have primary technical responsibility for the work performed by their disciplines, and are responsible for the conduct of interdisciplinary reviews as discussed previously in this section. Reviews are also conducted, as appropriate, by construction management, operations, QA, and procurement personnel. The design control process also interfaces with the document control and records management process via procedures.

The various AES departments and contractors of AES perform quality-related activities. The primary AES contractors are responsible for development of their respective QA Programs, as applicable to their scope of work or they work under the AES QA program following appropriate training. The interfaces between contractors and AES or among contractors shall be documented. AES and contracted personnel have the responsibility to identify quality problems. If a member of another area disagrees, that individual is instructed to elevate the matter to appropriate management. The disagreement may either be resolved at this Level or at any Level up to and including the AES President.

11.1.2 Design Requirements

Design requirements and associated design bases are established and maintained by the Engineering organization during design, construction and operations. The configuration management controls on design requirements and the integrated safety analysis of the design bases are described previously in this section. Design requirements are documented in a design requirements document that provides for a hierarchical distribution of these requirements through basis of design documents. The design requirements document and basis of design documents are controlled under the design control provisions of the configuration management program as described above, and are subject to the same change control as analyses, specifications, and drawings. Computer codes used in the design of QA Level 1 and QA Level 2 items and activities are also subject to these design control measures, with additional requirements as appropriate for software control, verification, and validation.

Design documents associated with QA Level 1 and QA Level 2 items and activities are subject to interdisciplinary reviews and design verification, as applicable. Analyses constituting the integrated safety analysis of the design bases are subject to the same requirements. Changes to the design are evaluated to ensure consistency with the design bases.

IROFS are listed in the design requirements document. This list will be augmented and maintained current as appropriate as QA Level 1 and QA Level 2 items and activities are identified during detailed design.

A qualified individual who specifies and includes the appropriate codes, standards, and licensing commitments within the design documents prepares each design document, such as a calculation, specification, procedure, or drawing. This individual also notes any deviations or changes from such standards within the design documentation package. Each design document is then checked by another individual qualified in the same discipline and is reviewed for concept and conformity with the design inputs. These design inputs are in sufficient detail to permit verification of the document. The manager having overall responsibility for the design function approves the document. The Engineering Manager documents the entire review process in accordance with approved procedures. These procedures include provisions to

assure that appropriate quality standards are specified in design documents, including quantitative or qualitative acceptance criteria. The QA Manager conducts audits of the design control process using independent technically qualified individuals to augment the QA audit team.

During the design check and review, emphasis is placed on assuring conformance with applicable codes, standards and license application design commitments. The individuals in engineering assigned to perform the check and review of a document have full and independent authority to withhold approval until issues concerning the work have been resolved. Design reviews, alternative calculations, or qualification testing accomplishes verification of design. The bases for a design, such as analytical models, theories, examples, tables, codes and computer programs must be referenced in the design document if appropriate and their application verified during check and review. Model tests, when required to prove the adequacy of a concept or a design, are reviewed and approved by the responsible qualified individual. Testing used for design verification shall demonstrate adequacy of performance under conditions that simulate the most adverse design conditions. The tests used for design verification must meet all the design requirements.

Qualified individuals other than those who performed the design but who may be from the same organization perform design verification. Verification may be performed by the supervisor of the individual performing the design, provided this need is documented, approved in advance by the supervisor's management, and the supervisor did not specify a singular design approach or rule out certain design considerations, and did not establish the design inputs used in the design or, provided the supervisor is the only individual in the organization competent to perform the verification. The verification by a supervisor of their own design constraints, design input, or design work would only occur in rare instances. This would occur only when the supervisor is the only individual in the organization competent to perform the verification. These instances are authorized and documented in writing on a case-by-case basis.

Independent design verification shall be accomplished before the design document (or information contained therein) is released for use by other organizations for design work or to support other activities such as procurement, construction, or installation. When this is not practical due to time constraints, the unverified portion of the document is identified and controlled. In all cases, the design verification shall be completed before relying on the item to perform its function or installation becomes irreversible. Any changes to the design and procurement documents, including field changes, must be reviewed, checked and approved commensurate with the original approval requirements.

After design documents have been properly prepared, checked, reviewed, and approved by the appropriate parties, the responsible engineer sends the document to document control for distribution. When required, each recipient of a design document verifies receipt of such document to the document control center.

The document control center, after verification of distribution to a recipient, maintains the required documentation in its files.

When deficiencies are identified which affect the design of QA Level 1 and QA Level 2 items and activities, such deficiencies are documented and resolved in accordance with approved Corrective Action Program (CAP) procedures. In accordance with the CAP, the report is forwarded for appropriate review to the responsible manager, who coordinates further review of the problem and revises all design documents affected by the deficiency as necessary. When required, the responsible manager forwards the report to the engineers in other areas, who coordinate necessary revisions to their affected documents

Design interface is maintained by communication among the principals, including the following:

A. Design documents are reviewed by the responsible engineer or authorized representative. As appropriate, subsequent review or waiver of review by the other area engineers is documented.

B. Project review meetings are scheduled and held to coordinate design, procurement, construction and pre-operational testing of the facility. These meetings provide a primary working interface among the principal organizations.

C. Reports of nonconformances are transmitted and controlled by procedures. As required by the nonconformance procedure, the QA Manager or designee approves resolution of nonconformances.

During the operational phase, measures are provided to ensure responsible facility personnel are made aware of design changes and modifications that may affect the performance of their duties.

11.1.2.1 Configuration Management Controls on the Design Requirements

Configuration control is accomplished during design through the use of procedures for controlling design, including preparation, review (including interdisciplinary review and preparation of NCS analyses and NCS evaluations as applicable), and design verification where appropriate, approval, and release and distribution for use. Engineering documents are assessed for QA Level classification. Changes to the approved design also are subject to a review to ensure consistency with the design bases of QA Level 1 and QA Level 2 items and activities.

Configuration verification is also accomplished through design verification, which ensures that design documents are consistent and that design requirements for QA Level 1 and QA Level 2 items and activities are met. During construction and testing, this verification also extends to verification that as-built configurations are consistent with the design, and that testing that is specified to demonstrate performance of QA Level 1 and QA Level 2 items and activities is accomplished successfully.

The QA Program requires procedures that specify that work performed shall be accomplished in accordance with the requirements and guidelines imposed by applicable specifications, drawings, codes, standards, regulations, quality assurance criteria and site characteristics.

Acceptance criteria established by the designer are incorporated in the instructions, procedures and drawings used to perform the work. Documentation is maintained, including test results, and inspection records, demonstrating that the work has been properly performed. Procedures also provide for review, audit, approval and documentation of activities affecting the quality of items to ensure that applicable criteria have been met.

Maintenance, modification, and inspection procedures are reviewed by qualified personnel knowledgeable in the quality assurance disciplines to determine:

A. The need for inspection, identification of inspection personnel, and documentation of inspection result

B. That the necessary inspection requirements, methods, and acceptance criteria have been identified.

Facility procedures shall be reviewed by individuals knowledgeable in the area affected by the procedure on a frequency determined by the age and use of the procedure to determine if

changes are necessary or desirable. Procedures are also reviewed to ensure that they are maintained up-to-date with facility configuration and regulatory requirements. These reviews are intended to ensure that any modifications to facility systems, structures or components are reflected in current maintenance, operations and other facility procedures.

11.1.3 Document Control

Procedures are established which control the preparation and issuance of documents such as manuals, instructions, drawings, procedures, specifications, procurement documents and supplier-supplied documents, including any changes thereto. Measures are established to ensure documents, including revisions, are adequately reviewed, approved, and released for use by authorized personnel.

Document control procedures require documents to be transmitted and received in a timely manner at appropriate locations including the location where the prescribed activity is to be performed. Controlled copies of these documents and their revisions are distributed to and used by the persons performing the activity.

Superseded documents are destroyed or are retained only when they have been properly labeled. Indexes of current documents are maintained and controlled.

Document control is implemented in accordance with procedures. An electronic document management system is used both to file project records and to make available the latest revision (i.e., the controlled copy) of design documents. The system provides an "official" copy of the current document, and personnel are trained to use this system to retrieve controlled documents. The system is capable of generating indices of controlled documents, which are uniquely numbered (including revision number). Controlled documents are maintained until cancelled or superseded, and cancelled or superseded documents are maintained as a record, currently for the life of the project or termination of the license, whichever occurs later. Hard-copy distribution of controlled documents is provided when needed in accordance with applicable procedures (e.g., when the electronic document management system is not available).

A part of the configuration management program, the document control and records management procedures, as appropriate, capture the following documents:

- Design requirements, through the controlled copy of the design requirements document
- The design bases, through the controlled copy of the basis of design documents
- The integrated safety analysis of the design bases of IROFS and credited attributes of safe-by-design components, through the controlled copies of supporting analyses
- Nuclear Criticality Safety Analyses
- Nuclear Criticality Safety Evaluations
- As-built drawings
- Specifications
- Procedures that are IROFS
- Procedures involving training
- QA/QC documentation
- Maintenance

- Audit and assessment reports
- Emergency operating procedures
- Emergency response plans
- System modification documents
- Assessment reports
- Engineering documents including analyses, specifications, technical reports, and drawings. These items are documented in approved procedures.

11.1.4 Change Control

Procedures control changes to the technical baseline. The process includes an appropriate Level of technical, management, and safety review and approval prior to implementation. During the design phase of the project, the method of controlling changes is the design control process described in the QA Program. This process includes the conduct of interdisciplinary reviews that constitute a primary mechanism for ensuring consistency of the design with the design bases. During both construction and operation, appropriate reviews to ensure consistency with the design bases of QA Level 1 and QA Level 2 items and activities and the ISA will ensure that the design is constructed and operated/modified within the limits of the design basis. Additional details are provided below.

11.1.4.1 Design Phase

Changes to the design include a systematic review of the design bases for consistency. In the event of changes to reflect design or operational changes from the established design bases, both the integrated safety analysis and other documents affected by design bases of QA Level 1 and QA Level 2 items and activities including the design requirements document and basis of design documents, as applicable are properly modified, reviewed, and approved prior to implementation. Approved changes are made available to personnel through the document control function discussed previously in this section.

During design (i.e., prior to issuance of the EREF Materials License), the method of ensuring consistency between documents, including consistency between design changes and the safety assessment, is the interdisciplinary review process. The interdisciplinary reviews ensure design changes either: (1) do not impact the ISA; (2) are accounted for in subsequent changes to the ISA; or (3) are not approved or implemented. Prior to the NRC's issuance of the Materials License, AES will submit potential changes that reduce the level of commitments or margin of safety in the design bases of QA Level 1 and QA Level 2 items and activities to the NRC for review and approval prior to implementation of the change.

11.1.4.2 Construction Phase

When the project enters the construction phase, changes to documents issued for construction, fabrication, and procurement will be documented, reviewed, approved, and posted against each affected design document. Vendor drawings and data also undergo an interdisciplinary review when necessary to ensure compliance with procurement specifications and drawings, and to incorporate interface requirements into facility documents.

During construction, design changes will continue to be evaluated against the approved design bases. Changes are expected to the design as detailed design progresses and construction

begins. A systematic process consistent with the process described above will be used to evaluate changes in the design against the design bases of QA Level 1 and QA Level 2 items and activities and the ISA. Upon issuance of the EREF Materials License, the configuration change process will fully implement the provisions of 10 CFR 70.72 (CFR, 2008b), including reporting of changes made without prior NRC approval as required by 10 CFR 70.72(d)(2) and (3). Changes that require Commission approval, will be submitted as a license amendment request as required by 10 CFR 70.72(d)(1) and the change will not be implemented without prior NRC approval.

11.1.4.3 Operations Phase

During the operations phase, changes to design will be documented, reviewed, and approved prior to implementation. AES will implement a change process that fully implements the provisions of 10 CFR 70.72 (CFR, 2008b). Measures are provided to ensure responsible facility personnel are made aware of design changes and modifications that may affect the performance of their duties.

In order to provide for the continued safe and reliable operation of the facility structures, systems and components, measures are established to ensure that the quality of these structures, systems and components is not compromised by planned changes (modifications). The Engineering Manager develops all design changes to the facility. The design and implementation of modifications are performed in a manner so as to assure quality is maintained in the remainder of the system that is being modified, or as dictated by applicable regulations.

The administrative instructions for modifications are contained in a facility administrative procedure that is approved, including revisions, by the Engineering Manager with concurrence of the Quality Assurance Manager. The modification procedure contains the following items necessary to ensure quality in the modification program:

- The requirements that shall be met to implement a modification
- The requirements for initiating, approving, monitoring, designing, verifying, and documenting modifications. The facility modification procedure shall be written to ensure that policies are formulated and maintained to satisfy the quality assurance requirements specified in the AES QA Program, as applicable.

Each change to the facility or to activities of personnel shall have an evaluation performed in accordance with the requirements of 10 CFR 70.72 (CFR, 2008b), as applicable. Each modification shall also be evaluated for any required changes or additions to the facility's procedures, personnel training, testing program, or regulatory documents. For changes (i.e., new design or operation, or modification to the facility or to activities of personnel, e.g., site structures, systems, components, computer programs, processes, operating procedures, management measures) that involve or could affect uranium on site, a Nuclear Criticality Safety (NCS) evaluation and, if required, an NCS analysis shall be prepared and approved. Prior to implementing the change, it shall be determined that the entire process will be subcritical (with applicable margin for safety) under both normal and credible abnormal conditions.

Each modification is also evaluated and documented for radiation exposure to minimize worker exposures in keeping with the facility ALARA program, criticality and worker safety requirements and/or restrictions. Other areas of consideration in evaluating modifications may include, but are not limited to the review of:

- Modification cost
- Lessons learned from similar completed modifications

- QA aspects
- Potential operability or maintainability concerns
- Constructability concerns
- Post-modification testing requirements
- Environmental considerations
- Human factors.

After completion of a modification to a structure, system, or component, the modification project engineer shall ensure that all applicable testing has been completed to ensure correct operation of the system(s) affected by the modification and documentation regarding the modification is complete. In order to ensure operators are able to operate a modified system safely, when a modification is complete, all documents necessary, e.g., the revised process description, checklists for operation and flowsheets are made available to operations and maintenance departments once the modified system becomes "operational." Appropriate training on the modification is completed before a system is placed in operation. A formal notice of a modification being completed is distributed to all appropriate managers. As-built drawings incorporating the modification are completed promptly. These records shall be identified and shall be retained for the duration of the facility license.

11.1.5 Assessments

Periodic assessments of the configuration management program are conducted to determine the system's effectiveness and to correct deficiencies. These assessments include review of the adequacy of documentation and system walk downs of the as-built facility. Such assessments are conducted and documented in accordance with procedures and scheduled as discussed in Appendix A, Section 18, Internal Audits.

Periodic assessments of the configuration management program and of the design confirm that the system meets its goals and that the design is consistent with the design bases. Incident investigations occur in accordance with the QA Program and associated CAP procedures in the event problems are encountered. Prompt corrective actions are developed as a result of incident investigations or in response to adverse audit/assessment results, in accordance with CAP procedures.

11.2 MAINTENANCE

This section outlines the maintenance and functional testing programs to be implemented for the operations phase of the facility. Preventive maintenance activities, surveillance, and performance trending provide reasonable and continuing assurance that QA Level 1 and QA Level 2 items will be available and reliable to perform their safety functions.

The purpose of planned and scheduled maintenance for QA Level 1 and QA Level 2 items is to ensure that the equipment and controls are kept in a condition of readiness to perform the planned and designed functions when required. Appropriate plant management is responsible for ensuring the operational readiness of QA Level 1 and QA Level 2 items under this control. For this reason, the maintenance function is administratively closely coupled to operations. The Maintenance organization plans, schedules, tracks, and maintains records for maintenance activities.

In order to provide for the continued safe and reliable operation of the facility structures, systems and components, measures are established to ensure that the quality of these structures, systems and components is not compromised by planned changes (modifications) or maintenance activities. The Engineering Manager develops design changes to the facility. After issuance of the Operating License, the Plant Manager has overall responsibility for the design of and modifications to facility structures, systems or components and maintenance activities. The design and implementation of modifications are performed in a manner so as to assure quality is maintained in a manner commensurate with the remainder of the system which is being modified, or as dictated by applicable regulations.

The administrative instructions for modifications are contained in a facility administrative procedure that is approved, including revisions, by the Engineering Manager with concurrence of the Quality Assurance Manager. The modification procedure contains the following items necessary to ensure quality in the modification program:

- The requirements which shall be met to implement a modification

The requirements for initiating, approving, monitoring, designing, verifying, and documenting modifications. The facility modification procedure shall be written to ensure that policies are formulated and maintained to satisfy the quality assurance standards specified in the AES QA Program, as applicable.

Listed below are methods or practices that will be applied to the corrective, preventive, and functional-test maintenance elements. AES will prepare written procedures for performance of these methods and practices. These methods and practices include, as applicable:

- Parts lists
- As-built or redlined drawings
- A notification step to the Operations function before conducting repairs and removing an IROFS from service
- Radiation Work Permits
- Replacement with like-kind parts and the control of new or replacement parts to ensure compliance with 10 CFR 21 (CFR, 2008c)
- Compensatory measures while performing work on IROFS
- Procedural control of removal of components from service for maintenance and for return to service

- Ensuring safe operations during the removal of IROFS from service
- Notification to Operations personnel that repairs have been completed.

Written procedures for the performance of maintenance activities include the steps listed above. The details of maintenance procedure acceptance criteria, reviews, and approval are provided in Section 11.4, Procedures Development and Implementation.

As applicable, contractors that work on or near IROFS identified in the ISA Summary will be required by AES to follow the same maintenance procedures described for the corrective, preventive, functional testing, or surveillance/monitoring activities listed above for the maintenance function.

Maintenance procedures involving QA Level 1 and QA Level 2 items and activities commit to the topics listed below for corrective and preventive maintenance, functional testing after maintenance and surveillance/monitoring maintenance activities, as applicable:

- Pre-maintenance activities require reviews of the work to be performed, including procedure reviews for accuracy and completeness.
- New procedures or work activities that involve or could affect uranium on site require preparation and approval of an NCS evaluation and, if required, an NCS analysis.
- Steps that require notification of affected parties (operators and appropriate managers) before performing work and on completion of maintenance work. The discussion includes potential degradation of QA Level 1 and QA Level 2 items and activities during the planned maintenance.
- Control of work by comprehensive procedures to be followed by maintenance technicians. Maintenance procedures are reviewed by the various safety disciplines, including criticality, fire, radiation, industrial, and chemical process safety. The procedures describe, as a minimum, the following:
    - Qualifications of personnel authorized to perform the maintenance, functional testing or surveillance/monitoring
    - Controls on and specification of any replacement components or materials to be used (this will be controlled by Configuration Management, to ensure like-kind replacement and adherence to 10 CFR 21 (CFR, 2008c))
    - Post-maintenance testing to verify operability of the equipment
    - Tracking and records management of maintenance activities
    - Safe work practices (e. g., lockout/tag out, confined space entry, moderation control or exclusion area, radiation or hot work permits, and criticality, fire, chemical, and environmental issues).

Maintenance activities generally fall into the following categories:

- Surveillance/monitoring
- Corrective maintenance
- Preventive maintenance
- Functional testing.

These maintenance categories are discussed in the following sections.

11.2.1 Surveillance/Monitoring

Surveillance/monitoring is utilized to detect degradation and adverse trends of IROF'S so that action may be taken prior to component failure. The monitored parameters are selected based upon their ability to detect the predominant failure modes of the critical components. Data sources include; surveillance, periodic and diagnostic test results, plant computer information, operator rounds, walk downs, as-found conditions, failure trending, and predictive maintenance. Surveillance/monitoring and reporting are required for items and activities that are designated as QA Level 1 or QA Level 2.

Plant performance criteria are established to monitor plant performance and to monitor QA Level 1 and QA Level 2 items and activities functions and component parameters. These criteria are established using industry experience, operating data, surveillance data, and plant equipment operating experience. These criteria ensure the reliability and availability of QA Level 1 and QA Level 2 items and activities. The performance criteria are also used to demonstrate that the performance or condition of a QA Level 1 or QA Level 2 item or activity is being effectively controlled through appropriate predictive and repetitive maintenance strategies so that they remain capable of performing their intended function.

Surveillance of QA Level 1 and QA Level 2 items and activities is performed at specified intervals. The purpose of the surveillance program is to measure the degree to which they meet performance specifications. The results of surveillances are trended, and when the trend indicates potential performance degradation, preventive maintenance frequencies are adjusted or other appropriate corrective action is taken.

Incident investigations may identify root causes of failures that are related to the type or frequency of maintenance. The lessons learned from such investigations are factored into the surveillance/monitoring and preventive maintenance programs as appropriate.

Maintenance procedures prescribe compensatory measures, if appropriate, for surveillance tests of QA Level 1 and QA Level 2 items and activities that can be performed only while equipment is out of service.

Records showing the current surveillance schedule, performance criteria, and test results for all QA Level 1 and QA Level 2 items and activities will be maintained in accordance with the Record Management System.

Results of surveillance/monitoring activities related to QA Level 1 and QA Level 2 items and activities via the configuration management program will be evaluated by all safety disciplines to determine any impact on the ISA and any updates needed.

11.2.2 Corrective Maintenance

Corrective maintenance involves repair or replacement of equipment that has unexpectedly degraded or failed. Corrective maintenance of a QA Level 1 or QA Level 2 item restores the equipment to acceptable performance through a planned, systematic, controlled, and documented approach for the repair and replacement activities.

Following corrective maintenance on a QA Level 1 or QA Level 2 item, and before returning it to operational status, functional testing, if necessary, is performed to ensure the QA Level 1 or QA Level 2 item performs its intended safety function.

The CAP requires facility personnel to determine the cause of conditions adverse to quality and promptly act to correct these conditions.

Results of corrective maintenance activities related to QA Level 1 and QA Level 2 items via the configuration management program will be evaluated by applicable safety disciplines to determine any impact on the ISA and any updates needed.

11.2.3 Preventive Maintenance

Preventive maintenance (PM) includes preplanned and scheduled periodic refurbishment, partial or complete overhaul, or replacement of QA Level 1 and QA Level 2 items, if necessary, to ensure their continued safety function. Planning for preventive maintenance includes consideration of results of surveillance and monitoring, including failure history. PM also includes instrument calibration and testing.

The PM program procedures and calibration standards (traceable to the national standards system or to nationally accepted calibration techniques, as appropriate) enable the facility personnel to calibrate equipment and monitoring devices important to plant safety and safeguards. Testing performed on QA Level 1 and QA Level 2 items that are not redundant will provide for compensatory measures to be put into place to ensure that the QA Level 1 or QA Level 2 function is performed until it is put back into service.

Industry experience, operating data, surveillance data, and plant equipment operating experience are used to determine initial PM frequencies and procedures. In determining the frequency of PM, consideration is given to appropriately balancing the objective of preventing failures through maintenance against the objective of minimizing unavailability of IROFS because of PM. In addition, feedback from PM and corrective maintenance and the results of incident investigations and identified root causes are used, as appropriate, to modify the frequency or scope of PM. The rationale for deviations from industry standards or vendor recommendations for PM shall be documented.

After conducting preventive maintenance on a QA Level 1 or QA Level 2 item, and before returning it to operational status, functional testing, if necessary, is performed to ensure the QA Level 1 or QA Level 2 item performs its intended safety function. Functional testing is described in detail in Section 11.2.4, Functional Testing.

Records pertaining to preventive maintenance will be maintained in accordance with the Records Management System.

Results of preventive maintenance activities related to QA Level 1 and QA Level 2 items via the configuration management system will be evaluated by all safety disciplines to determine impact on the ISA and any updates needed.

11.2.4 Functional Testing

Functional testing of QA Level 1 and QA Level 2 items is performed, as appropriate, following initial installation, as part of periodic surveillance testing, and after corrective or preventive maintenance or calibration to ensure that the item is capable of performing its safety function, when required.

The overall testing program is broken into the two major testing programs and within each testing program are two testing categories:

A. Preoperational Testing Program

   1. Functional Testing
   2. Initial Startup Testing.

B. Operational Testing Program

1. Periodic Testing

2. Special Testing.

Results of surveillance/monitoring activities related to QA Level 1 and QA Level 2 items via the configuration management program will be evaluated by all safety disciplines to determine any impact on the ISA and any updates needed.

11.2.4.1 Objectives

The objectives of the overall facility preoperational and operational testing programs are to ensure that items relied on for safety:

A. Have been adequately designed and constructed

B. Meet contractual, regulatory, and licensing requirements

C. Do not adversely affect worker or the public health and safety

D. Can be operated in a dependable manner so as to perform their intended function.

Additionally, the preoperational and operational testing programs ensure that operating and emergency procedures are correct and that personnel have acquired the correct Level of technical expertise.

Periodic testing at the facility consists of that testing conducted on a periodic basis to monitor various facility parameters and to verify the continuing integrity and capability of QA Level 1 and QA Level 2 items.

Special testing at the facility consists of that testing which does not fall under any other testing program. This testing is of a non-recurring nature and is intended to enhance or supplement existing operational testing rather than replace or supersede other testing or testing programs.

11.2.4.2 Procedure Content

Test requirements are specified in written procedures except that, in lieu of written procedures, appropriate sections of related documents (i.e., American Society for Testing and Materials methods, external manuals, maintenance instructions, or approved drawings or travelers with acceptance criteria) may be used. Test Procedures are sufficiently detailed that qualified personnel can perform the required functions without direct supervision. The content of test procedures is uniform to the extent practicable and consists of the following:

A. Title

Each procedure contains a title descriptive of the activities to which it applies.

B. Purpose

The purpose for which the procedure is intended is stated. This statement of applicability is as clear and concise as practicable.

C. References

References are made to specific material used in the preparation and performance of a procedure. This includes applicable drawings, instruction manuals, specifications, and sections of the facility's operating license. These references are listed in a manner as to allow ready location of the material.

D. Time Required

As applicable, estimates of the manpower and time requirements for performance of the specified testing activity are indicated.

E. Prerequisites

Each procedure specifies those items that are required to be completed prior to the performance of the specified testing (e.g., a previous test or special operating conditions). This listing also includes any tests that are to be performed concurrently with the specified testing. Provisions are made to document verification of the completion of the specified prerequisite tests.

F. Test Equipment

Each procedure contains a listing of special test equipment required in performing the specified testing. Procedures contain information and/or references for the items listed such as instruction manuals or procedures.

G. Limits and Precautions

Limits on parameters being controlled and corrective measures necessary to return a parameter to its normal control band are specified. Procedures specifically incorporate limits and corrective measures for all operations affecting criticality safety.

Precautions are specified which alert the individual performing the task, of those situations for which important measures need to be taken early, or where extreme care must be used to protect personnel and equipment or to avoid an abnormal or an emergency situation.

H. Required Plant Unit Status

The procedure specifies the plant unit status necessary to perform the specified testing. Provisions are made to document compliance with the status specified.

I. Prerequisite System Conditions

The procedure specifies the prerequisite system conditions necessary to perform the specified testing. Provisions are made to document compliance with the conditions specified.

J. Test Method

Each procedure contains a brief descriptive section that summarizes the method to be used for performing the specified testing.

K. Data Required

Each procedure specifies any data that must be compiled in the performance of the specified testing in order to verify satisfactory completion of the specified testing. This includes a description of calculations necessary to reduce raw data to a workable form.

L. Acceptance Criteria

Each procedure states the criteria for evaluating the acceptability of the results of the specified testing. Test results are reduced to a meaningful and readily understandable form in order to facilitate evaluation of their acceptability. Adequate provisions are made to allow documentation of the acceptability, or unacceptability, of test results.

M. Procedure

Procedures contain step-by-step directions in the degree of detail necessary for performing the required testing. References to documents other than the subject procedure are included, as applicable. However, references are identified within these step-by-step directions when the sequence of steps requires that other tasks (not specified by the subject procedure) be performed prior to or concurrent with a procedure step. Where witnessing of a test is required, adequate provisions are made in the test procedure to allow for the required witnessing and to document the witnessing. Cautionary notes, applicable to specific steps, are included and are distinctly identified.

N. Enclosures

Data sheets, checklists and diagrams are attached to the procedure. In particular, checklists utilized to avoid or simplify lengthy or complex procedures are attached as enclosures.

11.2.4.3 Preoperational Testing Program

Preoperational functional tests are completed prior to UF_6 introduction. Other preoperational tests, not required prior to UF_6 introduction and not related to QA Level 1 and QA Level 2 items and activities, such as office building ventilation tests, may be completed following UF_6 introduction. Tests (or portions of tests), which are not required to be completed before UF_6 introduction are identified in the test plan.

The Preoperational testing program comprises three parts:

- Constructor turnover
- Preoperational functional testing
- Initial start up testing.

Constructor Turnover

The constructor is responsible for completion of as-built drawing verification, purging, cleaning, vacuum testing, system turnover and initial calibration of instrumentation in accordance with design and installation specifications provided by the architect engineers and vendors. As systems or portions of systems are turned over to AES, preoperational testing shall begin. The Startup Manager is responsible for coordination of the preoperational and startup test program.

The preoperational test plan including test summaries for systems is available to the NRC at least 90 days prior to the start of testing. Subsequent changes to the preoperational test plan are also made available to the NRC. Preoperational testing as a minimum includes all system or component tests required by the pertinent design code which were not performed by the constructor prior to turnover. In addition, preoperational tests include all testing necessary to demonstrate that the QA Level 1 and QA Level 2 items are capable of performing their intended function.

Functional Testing

Preoperational functional testing at the facility consists of that testing conducted to initially determine various facility parameters and to initially verify the capability of SSC to meet performance requirements. The tests conducted are primarily associated with IROFS and certain non-IROFS QA Level 1 or QA Level 2 items, but may also include a number of other tests of a technical or financial interest to AES.

Preoperational functional tests are performed following constructor turnover. The major objective of preoperational functional testing is to verify that QA Level 1 and QA Level 2 items essential to the safe operation of the plant are capable of performing their intended function.

For items that are not QA Level 1 or QA Level 2, acceptance criteria are established to ensure worker-safety and compliance with Occupational Safety and Health Administration (OSHA) requirements, reliable and efficient operation of the system and to demonstrate the performance of intended functions.

Initial startup testing at the facility consists of testing which includes initial UF_6 introduction and subsequent testing through the completion of Enrichment Setting Verification for each cascade. "Enrichment Setting Verification" is the verification of a selected enrichment weight percent by measurement of a physical sample collected during the "Enrichment Setting Verification" test run.

Initial startup testing is performed beginning with the introduction of UF_6 and ending with the start of commercial operation. The purpose of initial startup testing is to ensure safe and orderly UF_6 feeding and to verify parameters assumed in the ISA. Examples of initial startup tests include passivation and the filling phase.

Records of the preoperational and startup tests required prior to operation are maintained. These records include testing schedules and the testing results for QA Level 1 and QA Level 2 items.

Initial Startup Testing

Aspects of initial startup testing are conducted under appropriate test procedures. See Section 11.4, Procedures Development and Implementation, for a detailed description of facility procedures. The use of properly reviewed and approved test procedures is required for preoperational and startup tests. The results of each preoperational test are reviewed and approved by the responsible department manager or designee before they are used as the basis of continuing the test program. The results of startup testing are reviewed and approved by the appropriate functional area manager and by the Startup Manager. In addition, the results of each individual startup test will receive the same review as that described for preoperation functional tests. A modification to a QA Level 1 or QA Level 2 item or activity is evaluated in accordance with 10 CFR 70.72 (CFR, 2008b) prior to making the change.

The impact of modifications on future and completed testing is evaluated during the 10 CFR 70.72 (CFR, 2008b) evaluation process and retesting is conducted as required.

Copies of approved test procedures are made available to NRC personnel approximately 60 days prior to their intended use, and not less than 60 days prior to the scheduled introduction of UF_6 for startup tests.

The overall preoperational functional testing program is reviewed, prior to initial UF_6 introduction, by the Plant Manager and all functional area managers to ensure that prerequisite testing is complete.

The facility operating, emergency and surveillance procedures are use-tested throughout the testing program phases and are also used in the development of preoperation functional testing and initial startup testing procedures to the extent practicable. The trial use of operating procedures serves to familiarize operating personnel with systems and plant operation during the testing phases and also serves to ensure the adequacy of the procedures under actual or simulated operating conditions before plant operation begins.

Procedures which cannot be use-tested during the testing program phase are revised based on initial use-testing, operating experience and comparison with the as-built systems. This ensures that these procedures are as accurate and comprehensive as practicable.

11.2.4.4 Operational Testing Program

The operational testing program consists of periodic testing and special testing. Periodic testing is conducted at the facility to monitor various facility parameters and to verify the continuing integrity and capability of facility QA Level 1 and QA Level 2 items. Special testing which may be conducted at the facility is testing which does not fall under any other testing program and is of a non-recurring nature.

The Maintenance Manager has overall responsibility for the development and conduct of the operational testing program and in conjunction with the Operations Manager and the Environmental, Health, Safety and Licensing (EHS&L) Manager ensures that testing commitments and applicable regulatory requirements are met.

The EHS&L Manager shall ensure that new surveillance requirements or testing commitments are identified to the Maintenance Manager. The Maintenance Manager shall make responsibility assignments for new testing requirements.

Surveillance commitments, procedures identified to satisfy these commitments and surveillance procedure responsibility assignments for the facility are identified in a computer database. The database is also used to ensure surveillance testing is completed in the required time interval for all departments.

Test Coordinators are also used for operational testing. The Test Coordinator has the responsibility to be thoroughly familiar with the procedure to be performed. The Test Coordinator should have an adequate period of time in which to review the procedure and the associated system before the start of the test. It is the responsibility of the appropriate section or department head to designate and ensure that each Test Coordinator meets the appropriate requirements. Operational testing is usually performed by each shift. The Test Coordinator, as part of the shift personnel, also performs regular shift duties in performance of the tests.

The Test Coordinator has the following responsibilities regarding the conduct of testing:

A. Verification of all system and plant unit prerequisites

B. Observance of all limits and precautions during the conduct of the test

C. Compliance with the requirements of the facility license and any other facility directives regarding procedure changes and documentation

D. Identifying and taking corrective actions necessary to resolve system deficiencies or discrepancies observed during the conduct of the test

E. Verification of proper data acquisition, evaluation or results, and compliance with stated acceptance criteria

F. Ensuring that adequate personnel safety precautions are observed during the conduct of the test

G. Coordinating and observing additional manpower and support required from other departments or organizations.

Periodic and special testing procedures are sufficiently detailed that qualified personnel can perform the required functions without direct supervision. The administrative requirements for

periodic and special testing procedures are the same as those used for preoperational functional test and initial startup test procedures as identified in Section 11.2.4.3, Preoperational Testing Program. Spaces for initials and dates are required for the following sections:

A. Prerequisite Tests

B. Required Facility (or Plant Unit) Status

C. Prerequisite System Conditions

D. Procedure

E. Enclosures (where calculations are made).

Whenever possible generic procedures and enclosures for recording data for periodic and special tests are used. Also whenever possible, the enclosure is designed as a self-sufficient document that can be filed as evidence that the subject test was performed. Enclosures used as self-sufficient documents should contain sign-off blanks (Initials/Date) to verify that prerequisite tests, required facility status and prerequisite facility or plant unit status and prerequisite system conditions are met before conduct of the test.

11.2.4.4.1 Periodic Testing

The periodic testing program at the facility consists of testing conducted on a periodic basis to verify the continuing capability of QA Level 1 and QA Level 2 items to meet performance requirements. The facility periodic test program verifies that the facility:

A. Complies with applicable regulatory and licensing requirements

B. Does not endanger health and minimizes danger to life or property

C. Is capable of operation in a dependable manner so as to perform its intended function.

The facility periodic testing program begins during the preoperational testing stage and continues throughout the facility's life.

A periodic testing schedule is established to ensure that required testing is performed and properly evaluated on a timely basis. The schedule is revised periodically, as necessary, to reflect changes in the periodic testing requirements and experience gained during plant operation. Testing is scheduled such that the safety of the plant is never dependent: on the performance of a QA Level 1 or QA Level 2 item that has not been tested within its specified testing interval.

Periodic test scheduling is handled through the Maintenance department. The Maintenance department maintains the periodic test status index on the computer database. The purpose of this index is to assist groups in assuring that surveillances are being completed within the required test interval.

The database includes all periodic testing, calibration or inspection required by regulatory requirements or licensing commitments, and provides the following information for each surveillance:

- Test #
- Title
- Equipment #
- Work Request # (if applicable)

- Test Frequency
- Plant Cascade #
- Last date test was performed
- Next date test is due.

In the event that a test cannot be performed within its required interval due to system or plant unit conditions, the responsible department notifies the on-duty Production Manager and processes the condition in accordance with the Corrective Action program. The responsible department lists the earliest possible date the test could be performed and the latest date along with the required system or unit-mode condition. However, the responsible department will ensure that the test is performed as soon as practical once required conditions are met, regardless of the estimated date given earlier.

Periodic testing and surveillance associated with QA Level 1 and QA Level 2 items and activities are performed in accordance with written procedures.

11.2.4.4.2 Special Testing

Special testing is testing conducted at the facility that is not a facility preoperational test, periodic test, post-modification test, or post-maintenance test. Special testing is of a non-recurring nature and is conducted to determine facility parameters and/or to verify the capability of QA Level 1 and QA Level 2 items to meet performance requirements. Purposes of special testing include, but are not necessarily limited to, the following:

A. Acquisition of particular data for special analysis

B. Determination of information relating to facility incidents

C. Verification that required corrective actions reasonably produce expected results and do not adversely affect the safety of operations

D. Confirmation that facility modifications reasonably produce expected results and do not adversely affect systems, equipment and/or personnel by causing them to function outside established design conditions; applicable to testing performed outside of a post-modification test.

The determination that a certain plant activity is a Special Test is intended to exclude those plant activities which are routine surveillances, normal operational evolutions, and activities for which there is previous experience in the conduct and performance of the activity. At the discretion of the Plant Manager, a test may be conducted as a special test. In making this determination, facility management includes the following evaluations of characteristics of the activity:

A. Does the activity involve an unusual operational configuration for which there is no previous experience?

B. Does the activity have the propensity, if improperly conducted, to significantly affect primary plant parameters?

C. Does the activity involve seldom-performed evolutions, meeting one of the above criteria, in which the time elapsed since the previous conduct of the activity renders prior experience not useful?

Special tests are considered to be a facility change or change in process safety information that may alter the parameters of an accident sequence. As described in SAR Section 3.0.2, these

tests must be reviewed by the ISA method(s) as described in the ISA Summary. In addition, special tests will be reviewed in accordance with 10 CFR 70.72(a) and (c).

11.3 TRAINING AND QUALIFICATIONS

This section describes the training program for the operations phase of the facility, including preoperational functional testing and initial startup testing. The training program requirements apply to those plant personnel who perform activities relied on for safety.

The QA Program provides training and qualification requirements, during the design, construction, and operations phases, for QA training of personnel performing QA Level 1 and QA Level 2 work activities; for nondestructive examination, inspection, and test personnel; and for QA auditors.

The principle objective of the AES training program system is to ensure job proficiency of all facility personnel involved in QA Level 1 and QA Level 2 work activities through effective training and qualification. The training program system is designed to accommodate future growth and meet commitments to comply with applicable established regulations and standards.

Qualification is indicated by successful completion of prescribed training, demonstration of the ability to perform assigned tasks and where required by regulation, maintaining a current and valid certification. Training is designed, developed and implemented according to a systematic approach. Employees are provided with formal training to establish the knowledge foundation and on-the-job training to develop work performance skills. Continuing training is provided, as required, to maintain proficiency in these knowledge and skill components, and to provide further employee development.

11.3.1 Organization and Management of the Training Function

Line managers are responsible for the content and effective conduct of training for their personnel. Training responsibilities for line managers are included in position descriptions, and line managers are given the authority to implement training for their personnel. The training organization provides support to line managers by facilitating the planning, directing, analyzing, developing, conducting, evaluating, and controlling of a systematic performance-based training process. Performance-based training is used as the primary management tool for analyzing, designing, developing, conducting, and evaluating training.

Facility administrative procedures establish the requirements for indoctrination and training of personnel performing activities relied on for safety and to ensure that the training program is conducted in a reliable and consistent manner throughout training areas. Exceptions from training requirements may be granted when justified and documented in accordance with procedures and approved by appropriate management.

Lesson plans are used for classroom and on-the-job training to provide consistent subject matter. When design changes or facility modifications are implemented, updates of applicable lesson plans are included in the change control process of the configuration management program.

Training records are maintained to support management information needs associated with personnel training, job performance, and qualifications.

The training programs at the facility are the responsibility of the Training Manager. Records are maintained on employee's qualifications, experience, training and retraining. The employee training file shall include records of general employee training, technical training, and employee development training conducted at the facility. The employee training file shall also contain records of special company sponsored training conducted by others. The training records for

individuals are maintained so that they are accurate and retrievable. Training records are retained in accordance with the records management procedures.

11.3.2 Analysis and Identification of Functional Areas Requiring Training

A needs/job analysis is performed and tasks are identified to ensure that appropriate training is provided to personnel working on tasks related to QA Level 1 and QA Level 2 items and activities. Additionally, Job Hazard Analysis (JHA), sometimes referred to as Job Safety Analysis (JSA) (i.e., a step-by-step process used to evaluate job hazards), will be used as part of on-the-job training for providing employees the skills necessary to perform their jobs safely at the EREF.

The training organization consults with relevant technical and management personnel as necessary to develop a list of tasks for which personnel training for specific jobs is appropriate. The list of tasks selected for training is reviewed and compared to the training materials as part of the systematic evaluation of training effectiveness. The task list is also updated as necessitated by changes in procedures, processes, plant systems, equipment, or job scope.

11.3.3 Position Training Requirements

Minimum training requirements are developed for those positions whose activities are relied on for safety. Initial identification of job-specific training requirements is based on experience. Entry-Level criteria (e.g., education, technical background, and/or experience) for these positions are contained in position descriptions.

The training program is designed to prepare initial and replacement personnel for safe, reliable and efficient operation of the facility. Appropriate training for personnel of various abilities and experience backgrounds is provided. The Level at which an employee initially enters the training program is determined by an evaluation of the employee's past experience, Level of ability, and qualifications.

Facility personnel may be trained through participation in prescribed parts of the training program that consists of the following:

- General Employee Training
- Technical Training
- Employee Development/Management-Supervisory Training.

Training is made available to facility personnel to initially develop and maintain minimum qualifications outlined in Chapter 2, Organization and Administration. The objective of the training shall be to ensure safe and efficient operation of the facility and compliance with applicable established regulations and requirements. Training requirements shall be applicable to, but not necessarily restricted to, those personnel within the plant organization who have a direct relationship to the operation, maintenance, testing or other technical aspect of the facility IROFS. Training courses are kept up-to-date to reflect plant modifications and changes to procedures when applicable.

Continuing or periodic retraining courses shall be established when applicable to ensure that personnel remain proficient. Periodic retraining generally is conducted to ensure retention of knowledge and skills important to facility operations. The training may consist of periodic retraining exercises, instruction, and review of subjects as appropriate to maintain proficiency of all personnel assigned to the facility. Section 7, Maintenance of Radiological Contingency

Preparedness Capability, of the Emergency Plan provides additional information on personnel training for emergency response tasks.

11.3.3.1 General Employee Training

General Employee Training encompasses those Quality Assurance, radiation protection, safety, emergency and administrative procedures established by facility management and applicable regulations. The safety training for the EREF complies with the applicable sections of Occupational Safety and Health Administration (OSHA) regulations such as 29 CFR 1910 (Occupational Safety and Health Standards), 1910.1200 (Hazard Communication), and with NRC regulations such as 10 CFR 20 (Standards for Protection Against Radiation) and 10 CFR 19 (Notices, Instructions and Reports to Workers: Inspection and Investigations). Continuing training is conducted in these areas, as necessary, to maintain employee proficiency. Persons under the supervision of facility management (including contractors) must participate in General Employee Training; however, certain facility support personnel, depending on their normal work assignment, may not participate in all topics of this training. Temporary maintenance and service personnel receive General Employee Training to the extent necessary to assure safe execution of their duties. Certain portions of General Employee Training may be included in a New Employee Orientation Program. General Employee Training topics are listed below:

- General administrative controls and procedure use
- Quality Assurance policies and procedures
- Facility systems and equipment
- Nuclear safety (See Section 11.3.3.1.1 - includes the use of dosimetry, protective clothing and equipment)
- Industrial safety, health and first aid
- Emergency Plan and implementing procedures
- Facility Security Programs (includes the protection of classified matter)
- Chemical Safety
- Fire Protection and Fire Brigade (see Section 11.3.3.1.2)
- New Employee Orientation.

11.3.3.1.1 Nuclear Safety Training

Training programs are established for the various types of job functions (e.g., production operator, radiation protection technician, contractor personnel) commensurate with criticality safety and/or radiation safety responsibilities associated with each such position. Visitors to the Controlled Access Area are trained in the formal training program or are escorted by trained personnel while in the Controlled Access Area.

This training is highlighted to stress the high Level of importance placed on the radiological, criticality and chemical safety of plant personnel and the public. This training is structured as follows:

A. Personnel access procedures ensure the completion of formal nuclear safety training prior to permitting unescorted access into the Controlled Access Area.

B. Training sessions covering criticality safety, radiation protection and emergency procedures are conducted on a regular basis to accommodate new employees or those requiring retraining. Topics covered in the training program include:

1. Notices, reports and instructions to workers
2. Practices designed to keep radiation exposures ALARA
3. Methods of controlling radiation exposures
4. Contamination control methods (including decontamination)
5. Use of monitoring equipment
6. Emergency procedures and actions
7. Nature and sources of radiation
8. Safe use of chemicals
9. Biological effects of radiation
10. Use of personnel monitoring devices
11. Principles of nuclear criticality safety
12. Risk to pregnant females
13. Radiation protection practices
14. Protective clothing
15. Respiratory protection
16. Personnel surveys.

Criticality safety training shall be in accordance with ANSI/ANS-8.19-1996 (ANSI, 1996) and ANSI/ANS-8.20-1991 (ANSI, 1991).

Individuals attending these sessions must pass an initial examination covering the training contents to assure the understanding and effectiveness of the training. The effectiveness of the training programs is also evaluated by audits and assessments of operations and maintenance personnel responsible for following the requirements related to the topics listed above.

Newly hired or transferred employees reporting for work prior to the next regularly scheduled training session must complete nuclear safety training prior to unescorted access into the Controlled Access Area.

Since contractor employees perform diverse tasks in the Controlled Access Area, formal training for these employees is designed to address the type of work they perform. In addition to applicable radiation safety topics, training contents may include Radiation Work Permits, special bioassay sampling, and special precautions for welding, cutting, and grinding in the Controlled Access Area.

These training programs are conducted by instructors assigned by the EHS&L Manager as having the necessary knowledge to address criticality safety and radiation protection. Records of the training programs are maintained as described in Section 11.7, Records Management.

C. Individuals requiring unescorted access to the Controlled Access Area receive annual retraining. Retraining for individuals is scheduled and reported by means of a computerized tracking system.

D. Contents of the formal nuclear safety training programs are reviewed and updated periodically by the EHS&L Manager, or designee, to ensure that the programs are current and adequate. In addition, at least annually, the contents of the radiation protection sections of the nuclear safety training program are reviewed and updated, as required, by the Radiation Protection/Chemistry Manager or his designee.

E. Operational personnel are further instructed in the specific safety requirements of their work assignments by their immediate supervisor or delegate during on-the-job training. Employees must demonstrate understanding of work assignment requirements based on observations by their immediate supervisor or delegate before working without direct supervision. Changes to work procedures including safety requirements are reviewed with operational personnel by their immediate supervisor or delegate.

F. Radiation safety topics are also discussed and reviewed at least annually in roundtable safety meetings held by supervisors or delegates with their workers, and at other meetings held by managers with their employees.

11.3.3.1.2 Fire Brigade Training

The primary purpose of the Fire Brigade Training Program is to develop a group of facility employees skilled in fire prevention, fire fighting techniques, first aid procedures, and emergency response. They are trained and equipped to function as a team for the fighting of fires. The intent of the facility fire brigade is to be a first response effort designed to supplement the local fire department for fires at the plant and not to replace local fire fighters.

The Fire Brigade Training program provides for initial training of new fire brigade members, semi-annual classroom training and drills, annual practical training, and leadership training for fire brigade leaders.

11.3.3.2 Technical Training

Technical training is designed, developed and implemented to assist facility employees in gaining an understanding of applicable fundamentals, procedures, and practices common to a gas centrifuge uranium enrichment facility. Also, technical training is used to develop manipulative skills necessary to perform assigned work in a competent manner. Technical training consists of four segments:

- Initial Training
- On-the-Job Training and Qualifications
- Continuing Training
- Special Training.

11.3.3.2.1 Initial Training

Initial job training is designed to provide an understanding of the fundamentals, basic principles, and procedures involved in work to which an employee is assigned. This training may consist of, but is not limited to, live lectures, taped and filmed lectures, self-guided study, demonstrations, laboratories and workshops and on-the-job training.

Certain new employees or employees transferred from other sections within the facility may be partially qualified by reason of previous applicable training or experience. The extent of further training for these employees is determined by applicable regulations, performance in review sessions, comprehensive examinations, or other techniques designed to identify the employee's present Level of ability.

Initial job training and qualification programs are developed for operations, maintenance and technical services classifications. Training for each program is grouped into logical blocks or modules and presented in such a manner that specific behavioral objectives are accomplished. Trainee progress is evaluated using written examinations, oral or practical tests. Depending upon the regulatory requirements or individual's needs and plant operating conditions, allowances are made to suit specific situations. Brief descriptions of modules that may be contained in the initial training programs are as follows:

Operations Initial Training

A. General Systems

This training module provides the trainee with basic concepts and fundamentals in mathematics, physics, chemistry, heat transfer and electrical theory. Systems and components are taught in detail along with elementary process instrumentation and control. On-the-job orientation may be provided at an enrichment facility.

B. Specific Systems

This training module provides basic instruction in system and component identification and basic system operating characteristics. It provides a general overview of enrichment plant equipment and acquaints the trainees with enrichment plant terminology and nomenclature and provides instruction describing basic system operations.

C. Nuclear Preparatory

This training module develops the necessary concepts in basic nuclear physics, plant chemistry, basic thermodynamics, radiation protection, and enrichment theory. Experience in enrichment control and radiation protection is also provided. It is normally presented to operations personnel following the Systems Specific training module.

D. Plant Familiarization

The Plant Familiarization module provides for the orientation of employees to plant layout, plant systems, and practical laboratory and equipment work at the facility.

Mechanical Maintenance Initial Training

A. General Systems

This training module provides the trainee with basic concepts and fundamentals in mathematics, physics, chemistry, heal; transfer and electrical theory. Systems and components are taught in detail along with elementary process instrumentation and control. On-the-job orientation may be provided at an enrichment facility.

B. Fundamental Shop Skills

This training module provides instruction in fundamentals of mechanical maintenance performance. It combines academic instruction with hands-on training to familiarize trainees with design operational and physical characteristics of enrichment facility components, and basic skills and procedures used to perform mechanical repairs and/or equipment replacement. Task training lists are integrated into this module to assure that

each trainee attains a minimum Level of performance. Tasks are assigned and trainees use work procedures to guide them through a task. Both radiological and industrial safety is stressed in all phases of this training module.

C. Plant Familiarization

The Plant Familiarization module provides for the orientation of employees to plant layout, plant systems, and practical laboratory and equipment work at the facility.

Instrumentation and Electrical Maintenance Initial Training

A. General Systems

This training module provides the trainee with basic concepts and fundamentals in mathematics, physics, chemistry, heat transfer and electrical theory. Systems and components are taught in detail along with elementary process instrumentation and control. On-the-job orientation may be provided at an enrichment facility.

B. Basic Instrument and Electrical

This training module provides the trainee with refresher training in Electrical and Electronic Fundamentals, Digital Techniques and Application, Instrumentation and Control Theory and Application, and an introduction to the types and proper use of measuring and test equipment commonly used in enrichment facilities.

The module also provides the student a working knowledge of nuclear and non-nuclear instrumentation systems, overall integrated plant operation and control, and, in particular, the hazards of calibration errors and calibration during plant operation.

C. Basic Performance

The Fundamental Performance module familiarizes the trainee with plant test procedures, test equipment, and testing as well as plant records, reports, and data collection. It provides a basic understanding of thermodynamics used in testing plant heat transfer.

D. Plant Familiarization

The Plant Familiarization module provides for the orientation of employees to plant layout, plant systems, and practical laboratory and equipment work at the plant.

Health Physics and Chemistry Initial Training

A. General Systems

This training module provides the trainee with basic concepts and fundamentals in mathematics, physics, chemistry, heat transfer and electrical theory. Systems and components are taught in detail along with elementary process instrumentation and control. On-the-job orientation may be provided at an enrichment facility.

B. Fundamental Health Physics

The Fundamental Health Physics Module presents to the trainees a more comprehensive and theoretical understanding of the nuclear processes with which they are involved. In addition, the techniques for applying theory are presented in this module. Use is made of various non-automated counting and spectrographic equipment and portable survey instruments. Administrative material is also presented in a more detailed manner.

C. Fundamental Chemistry

The Fundamental Chemistry module provides familiarization with chemistry theory, techniques, and procedures. The overall goal of this module is familiarization necessary for chemistry technicians to be able to work safely and competently in the enrichment facility.

D. Plant Familiarization

The Plant Familiarization module provides for the orientation of employees to plant layout, plant systems, and practical laboratory and equipment work at the plant.

Engineer/Professional Initial Training

This training is part of the technical staff and managers training program.

A. Facility Orientation

This training module provides an orientation to each section within the EREF. An on-the-job task list provides the trainee with training objectives that must be accomplished while working in the section.

B. Basic Engineer/Professional Training

The Basic Engineer/Professional Training provides a basic understanding of how uranium is enriched, the systems and components required for producing the final product, and the interrelationship of the various facility organizations in achieving the overall objective.

C. Enrichment/Chemical Engineer/Professional Training

The Enrichment/Chemical Engineer/Professional Training provides specific theoretical information related to enrichment plant operations. Topics (e.g., Thermal Science, Nuclear Physics) address applications in an enrichment facility.

D. Engineer/Professional Systems Training

The Engineer/Professional Systems Training provides an overview of plant systems, components and procedures necessary to operate an enrichment plant safely and efficiently.

11.3.3.2.2 On-the-Job Training and Qualifications

On-the-job training (OJT) is a systematic method of providing the required job related skills and knowledge for a position. This training is conducted in the work environment. Applicable tasks and related procedures make up the OJT/qualifications program for each technical area which is designed to supplement and complement training received through formal classroom, laboratory, and/or simulator training. The objective of the program is to assure the trainee's ability to perform job tasks as described in the task descriptions and the Training and Qualification Guides. OJT will be documented and records maintained.

11.3.3.2.3 Continuing Training

Continuing training is any training not provided as initial qualification and basic training which maintains and improves job-related knowledge and skills such as the following:

- Facility systems and component changes
- OJT/Qualifications program retraining
- Policy and procedure changes

- Operating experience program documents review to include Industry and in-house operating experiences
- Continuing training required by regulation (e.g., emergency plan training)
- General employee, special, administrative, vendor, and/or advanced training topics supporting tasks that are elective in nature
- Training identified to resolve deficiencies (task-based) or to reinforce seldom used knowledge skills
- Refresher training on initial training topics
- Structured pre job instruction, mock-up training, and walk-throughs
- Quality awareness.

Continuing Training and Retraining may overlap to some degree in definition; however, Retraining refers to specific training designed for proficiency maintenance.

Continuing Training consists of formal and informal components performed on a frequency needed to maintain proficiency on the job. Each Section's Continuing Training Program is developed from a systematic approach, using information from job performance and safe operation as a basis for determining the content of continuing training. Continuing training may be offered, as needed, on any of the topics listed above.

Once the objectives for Continuing Training have been established, the methods for conducting the training may vary. The method selected must provide clear evidence of objective accomplishment and consistency in delivery.

11.3.3.2.4 Special Training

Special training involves those subjects of a unique nature required for a particular area of work. Special training is usually given to selected personnel based on specific needs not directly related to disciplinary lines.

11.3.4 Basis and Objectives for Training

Learning objectives identify the training content, as established by needs/job analyses and position-specific requirements. The task list from the needs/job analysis is used to develop action statements that describe the desired post-training performance. Objectives include the knowledge, skills, and abilities the trainee should demonstrate; the conditions under which required actions will take place; and the standards of performance the trainee should achieve upon completion of the training activity.

11.3.5 Organization of Instruction, Using Lesson Plans and Other Training Guides

Lesson plans are developed from the learning objectives that are based on job performance requirements. Lesson plans and other training guides are developed under the guidance of the training function. Lesson plans are reviewed by the training function and, generally, by the organization cognizant of the subject matter. Lesson plans are approved prior to issue or use. Lesson plans are used for classroom training and on-the-job training as required and include Standards for evaluating acceptable trainee performance.

11.3.6 Evaluation of Trainee Learning

Trainee understanding and command of learning objectives is evaluated through observation/demonstration or oral or written tests as appropriate. Such evaluations measure the trainee's skills and knowledge of job performance requirements.

Evaluations are performed by individuals qualified in the training subject matter.

11.3.7 Conduct of On-the-Job Training

On-the-Job Training is an element of the technical training program (see Section 11.3.3.2.2, On-the-Job Training and Qualifications). On-the-job training is used in combination with classroom training for activities that are QA Level 1 or QA Level 2. Designated personnel, competent in the program standards and methods of conducting the training, conduct on-the-job training using current performance-based training materials. Completion of on-the-job training is demonstrated by actual task performance or performance of a simulation of the task with the trainee explaining task actions using the conditions encountered during the performance of the task, including references, tools, and equipment reflecting the actual task to the extent practical.

11.3.8 Evaluation of Training Effectiveness

Periodically the training program is systematically evaluated to measure the program's effectiveness in producing competent employees. The trainees provide feedback after completion of classroom training sessions to provide data for this evaluation for program improvements. These evaluations identify program strengths and weaknesses, determine whether the program content matches current job needs, and determine if corrective actions are needed to improve the program's effectiveness. The training function is responsible for leading the training program evaluations and for implementing any corrective actions. Program evaluations may consist of an overall periodic evaluation or a series of topical evaluations over a given period.

Evaluation objectives that are applicable to the training program or topical area being reviewed are developed and may address the following elements of training:

- Management and administration of training and qualification programs
- Development and qualification of the training staff
- Position training requirements
- Determination of training program content, including its facility change control interface with the configuration management system
- Design and development of training programs, including lesson plans
- Conduct of training
- Trainee examinations and evaluations
- Training program assessments and evaluations.

Evaluation results are documented, with program strengths and weaknesses being highlighted. Identified weaknesses are reviewed, improvements are recommended, and changes are made to procedures, practices, or training materials as necessary.

Periodically, training and qualifications activities are monitored by designated facility and/or contracted training personnel. The Quality Assurance Department audits the facility training and qualification system. In addition, trainees and vendors may provide input concerning training program effectiveness. Methods utilized to obtain this information include, among other things surveys, questionnaires, performance appraisals, staff evaluation, and overall training program effectiveness evaluation instruments. Frequently conducted classes are not evaluated each time. However, they are routinely evaluated at a frequency sufficient to determine program effectiveness. Evaluation information may be collected through:

- Verification of program objectives as related to job duties for which intended
- Periodic working group program evaluations
- Testing to determine trainee accomplishment of objectives
- Trainee evaluation of the instruction
- Supervisor's evaluation of the trainee's performance after training on-the-job
- Supervisor's evaluation of the instruction.

Unacceptable individual performance is transmitted to the appropriate Line Manager.

11.3.9 Personnel Qualification

The qualification requirements for key management positions are described in Chapter 2, Organization and Administration. Training and qualification requirements associated with QA personnel are provided in Appendix A to this chapter. In addition, qualification and training requirements for process operator candidates shall be established and implemented in plant procedures.

11.3.10 Periodic Personnel Evaluations

Personnel performing activities relied on for safety are evaluated at least biennially to determine whether they are capable of continuing their activities that are relied on for safety. The evaluation may be by written test, oral test, or on-the-job performance evaluation. The results of the evaluation are documented. When the results of the evaluation dictate, retraining or other appropriate action is provided. Retraining is also required due to plant modifications, procedure changes, and QA program changes that result in new or revised information.

11.4 PROCEDURES DEVELOPMENT AND IMPLEMENTATION

Activities involving licensed materials or QA Level 1 and QA Level 2 items and activities are conducted in accordance with approved procedures. Before initial enrichment activities occur at the facility, procedures are made available to the NRC for their inspection. As noted throughout this document, procedures are used to control activities in order to ensure the activities are carried out in a safe manner and in accordance with regulatory requirements.

Generally, four types of plant procedures are used to control activities: operating procedures, administrative procedures, maintenance procedures, and emergency procedures.

Operating procedures, developed for workstation and Control Room operators, are used to directly control process operations. Operating procedures include:

- Purpose of the activity
- Regulations, polices, and guidelines governing the procedure
- Type of procedure
- Steps for each operating process phase:
  - Initial startup
  - Normal operations
  - Temporary operations
  - Emergency shutdown
  - Emergency operations
  - Normal shutdown
  - Startup following an emergency or extended downtime.
- Hazards and safety considerations
- Operating limits
- Precautions necessary to prevent exposure to hazardous chemicals (resulting from operations with Special Nuclear Material (SNM)) or to licensed SNM.
- Measures to be taken if contact or exposure occurs
- IROFS associated with the process and their functions
- The timeframe for which the procedure is valid.

Applicable safety limits and IROFS are clearly identified in the procedures. AES will incorporate methodology for identifying, developing, approving, implementing, and controlling operating procedures. Identifying needed procedures will include consideration of ISA results. The method will ensure that, as a minimum:

- Operating limits and IROFS are specified in the procedure
- Procedures include required actions for off-normal conditions of operation, as well as normal operations
- If needed safety checkpoints are identified at appropriate steps in the procedure
- Procedures are validated through field tests

- Procedures are approved by management personnel responsible and accountable for the operation
- A mechanism is specified for revising and reissuing procedures in a controlled manner
- The QA elements and CM Program at the facility provide reasonable assurance that current procedures are available and used at all work locations
- The facility training program trains the required persons in the use of the latest procedures available.

Administrative procedures are used to perform activities that support the process operations, including management measures such as the following:

- Configuration management
- Nuclear criticality, radiation, chemical, and fire safety
- Quality Assurance
- Design control
- Plant personnel training and qualification
- Audits and assessments
- Incident investigations
- Record keeping and document control
- Reporting
- Procurement.

Administrative procedures are also used for:

- Implementing the Fundamental Nuclear Material Control (FNMC) Plan
- Implementing the Emergency Plan
- Implementing the Physical Security Plan
- Implementing the Standard Practice Procedures Plan for the Protection of Classified Matter.

Maintenance procedures address:

- Preventive and corrective maintenance of QA Level 1 and QA Level 2 items
- Surveillance (includes calibration, inspection, and other surveillance testing)
- Functional testing of QA Level 1 and QA Level 2 items
- Requirements for pre-maintenance activity involving reviews of the work to be performed and reviews of procedures.

Emergency procedures address the preplanned actions of operators and other plant personnel in the event of an emergency.

Procedures will be established and implemented for nuclear criticality safety in accordance with ANSI/ANS-8.19-1996 (ANSI, 1996). The NCS procedures will be written such that no single, inadvertent departure from a procedure could cause an inadvertent criticality. Nuclear criticality safety postings at the EREF are established that identify administrative controls applicable and

appropriate to the activity or area in question. Nuclear criticality safety procedures and postings are controlled by procedure to ensure that they are maintained current.

Periodic reviews will be performed on procedures to assure their continued accuracy and usefulness. At a minimum, all operating procedures are reviewed every five years and emergency procedures are reviewed every year. In addition, applicable procedures will be reviewed after unusual incidents, such as an accident, unexpected transient, significant operator error, or equipment malfunction, or after any modification to a system, and procedures will be revised as needed.

11.4.1 Preparation of Procedures

Each procedure is assigned to a member of the facility staff or contractor for development. Initial procedure drafts are reviewed by other appropriate members of the facility staff, by personnel from the supplier of centrifuges (ETC), and other vendors, as appropriate for inclusion and correctness of technical information, including formulas, set points, and acceptance criteria and includes either a walkdown of the procedure in the field or a tabletop walkthrough. Procedures that are written for the operation of QA Level 1 and QA Level 2 items shall be subjected to an independent review performed by personnel not having direct responsibility for the work function under review. The designated approver shall determine whether or not any additional, cross-disciplinary review is required. The Plant Manager or designee shall approve all procedures. If the procedure involves QA directly, the QA Manager must approve the procedure.

11.4.2 Administrative Procedures

Facility administrative procedures are written by each department as necessary to control activities that support process operations, including management measures. Listed below are several areas for which administrative procedures are written, including principle features:

A. Operator's authority and responsibility: The operator is given the authority to manipulate controls which directly or indirectly affect the enrichment process, including a shut down of the process if deemed necessary by the Production Manager. The operators are also assigned the responsibility for knowing the limits and set points associated with safety-related equipment and systems as specified in designated operating procedures.

B. Activities affecting facility operation or operating indications: All facility maintenance personnel performing support functions (e.g., maintenance, testing) which may affect unit operation or Control Room indications are required to notify the Control Room Operator and/or Production Manager, as appropriate, prior to initiating such action.

C. Manipulation of facility control: Only operators are permitted to manipulate the facility controls, except for operator trainees under the direction of a qualified operator.

D. Relief of Duties: This procedure provides a detailed checklist of applicable items for shift turnover.

E. Equipment control: Equipment control is maintained and documented through the use of tags, labels, stamps, status logs or other suitable means.

F. Master surveillance testing schedule: A master surveillance testing schedule is documented to ensure that required testing is performed and evaluated on a timely basis. Surveillance testing is scheduled such that the safety of the facility is not dependent on the performance of a structure, system or component which has not been tested within its specified testing interval. The master surveillance testing schedule

identifies surveillance and testing requirements, applicable procedures, and required test frequency. Assignment of responsibility for these requirements is also indicated.

G. A Control Room Operations Logbook is maintained. This logbook contains significant events during each shift such as enrichment changes, alarms received, or abnormal operational conditions.

H. Fire Protection Procedures: Fire protection procedures are written to address such topics as training of the fire brigade, reporting of fires, and control of fire stops. The Safety, Security and Emergency Preparedness Manager has responsibility for fire protection procedures in general, with the facility's maintenance section having responsibility for certain fire protection procedures such as control of repairs to facility fire stops.

The administrative control of maintenance is maintained as follows:

A. In order to assure safe, reliable, and efficient operation, a comprehensive maintenance program for the facility's QA Level 1 and QA Level 2 items is established.

B. Personnel performing maintenance activities are qualified in accordance with applicable codes and standards and procedures.

C. Maintenance is performed in accordance with written procedures that conform to applicable codes, standards, specifications, and other appropriate criteria.

D. Maintenance is scheduled so as not to jeopardize facility operation or the safety of facility personnel.

E. Maintenance histories are maintained on facility QA Level 1 and QA Level 2 items.

The administrative control of facility modifications is discussed in Section 2.3.1, Configuration Management.

11.4.3 Procedures

Activities involving licensed materials or QA Level 1 and QA Level 2 items and activities are conducted in accordance with approved procedures. These procedures are intended to provide a pre-planned method of conducting operations of systems in order to eliminate errors due to on-the-spot analysis and judgments.

Procedures are sufficiently detailed that qualified individuals can perform the required functions without direct supervision. However, written procedures cannot address all contingencies and operating conditions. Therefore, they contain a degree of flexibility appropriate to the activities being performed. Procedural guidance exists to identify the manner in which procedures are to be implemented. For example, routine procedural actions may not require the procedure to be present during implementation of the actions, while complex jobs or checking with numerous sequences may require valve alignment checks, approved operator aids, or in-hand procedures that are referenced directly when the job is conducted. In addition, procedural guidance exists to define when verification of significant steps is required.

Examples of operating activities are:

- Evacuation and Preparatory Work Before Run Up of a Cascade
- Run Up of a Cascade
- Run Down of a Cascade

- Calibration of Pressure Transmitter
- Taking UF_6 Samples of a Cascade
- Installation of UF_6 Cylinders in Feed/Take-off Stations and Preparation for Operation
- Removal of UF_6 Cylinder from Feed/Take-off Stations
- Installation of UF_6 Cylinders in Take-off Stations
- UF_6 Gas Sampling in Take-off Lines
- UF_6 Sampling in Product Liquid Sampling Autoclaves
- Emptying of Cold Trap
- Exchange of Chemical Traps in Vent Systems.

Plant specific procedures for abnormal events are written for the facility. These procedures are based on a sequence of observations and actions, with emphasis placed on operator responses to indications in the Control Room. When immediate operator actions are required to prevent or mitigate the consequences of an abnormal situation, procedures require that those actions be implemented at the earliest possible time, even if full knowledge of the abnormal situation is not yet available. The actions outlined in abnormal event procedures are based on a conservative course of action to be followed by the operating crew.

Typical abnormal event procedures include:

- Power Failure
- Loss of Heat Tracing
- Damaged UF_6 Cylinder Repairs
- Annunciator alarms (procedures to include alarm set points, probable causes, automatic actions, immediate manual actions, supplementary actions and applicable references).

Temporary changes to procedures are issued for operating activities that are of a nonrecurring nature. Temporary changes to procedures are used when revision of an operating or other permanent procedure is not practical. Temporary changes to procedures shall not involve a change to the ISA and shall not alter the intent of the original procedure. Examples of uses of temporary changes to procedures are:

- To direct operating activities during special testing or maintenance
- To provide guidance in unusual situations not within the scope of normal procedures
- To ensure orderly and uniform operations for short periods of time when the facility, a unit, a cascade, a structure, a system or a component is performing in a manner not addressed by existing procedures or has been modified in such a manner that portions of existing procedures do not apply.

The temporary changes to procedures are approved by two members of the facility management staff, at least one of whom is a Production Manager. Temporary changes to procedures are documented, reviewed and approved with the process described in Section 11.4.4, Changes to Procedures. In addition, the approved duration (e.g., expiration date) for the temporary change will be identified on the temporary procedure change in accordance with 10 CFR 70.72(a)(5).

Maintenance of facility structures, systems and components is performed in accordance with written procedures, documented instructions, checklists, or drawings appropriate to the circumstances (for example, skills normally possessed by qualified maintenance personnel may not require detailed step-by-step delineation in a written procedure) that conform to applicable codes, standards, specifications, and other appropriate criteria.

The facility's maintenance department under the Maintenance Manager has responsibility for preparation and implementation of maintenance procedures. The maintenance, testing and calibration of facility QA Level 1 and QA Level 2 items are performed in accordance with approved written procedures.

Testing conducted on a periodic basis to determine various facility parameters and to verify the continuing capability of QA Level 1 and QA Level 2 items to meet performance requirements is conducted in accordance with approved, written procedures. Periodic test procedures are utilized to perform such testing and are sufficiently detailed that qualified personnel can perform the required functions without direct supervision. Testing performed on IROF'S that are not redundant will provide for compensatory measures to be put into place to ensure that the IROFS performs until it is put back into service.

Periodic test procedures are performed by the Operations and Maintenance departments. The Maintenance Manager has overall responsibility for assuring that the periodic testing is in compliance with the requirements.

Chemical and radiochemical activities associated with facility IROFS are performed in accordance with approved, written procedures. The Radiation Protection/Chemistry Manager has responsibility for preparation and implementation of chemistry procedures.

Radioactive waste management activities associated with the facility's liquid, gaseous, and solid waste systems are performed in accordance with approved written procedures. The facility's operations and radiation protection/chemistry departments have responsibility for preparation and implementation of the radioactive waste management procedures.

Likewise, other departments at the facility develop and implement activities at the facility through the use of procedures.

Procedures will include provisions for operations to stop and place the process in a safe condition if a step of a procedure cannot be performed as written.

11.4.4 Changes to Procedures

Changes to procedures shall be processed as described below.

A. The preparer documents the change as well as the reason for the change.

B. An evaluation shall be performed in accordance with 10 CFR 70.72 (CFR, 2008b) as appropriate. If the evaluation reveals that NRC review and approval is required prior to implementation, the change is not implemented until approval is received from the NRC.

C. The procedure with proposed changes shall be reviewed by a qualified reviewer.

D. The Plant Manager, a functional area manager, or a designee approved by the Plant Manager shall be responsible for approving procedure changes, and for determining whether a cross-disciplinary review is necessary, and by which department(s). The need for the following cross-disciplinary reviews shall be considered, as a minimum:

1. For proposed changes having a potential impact on chemical or radiation safety, a review shall be performed for chemical and radiation hazards. Changes shall be approved by the Radiation Protection/Chemistry Manager or designee.
2. For proposed changes having a potential impact on criticality safety, an NCS evaluation and, if required, an NCS analysis shall be performed. Any necessary controlled parameters, limits, IROFS, management measures, or NCS analyses that must be imposed or revised are adequately reflected in appropriate procedures and/or design basis documents. Changes shall be independently reviewed by a criticality safety engineer, and approved by the Nuclear Criticality Safety Manager or designee.
3. For proposed changes potentially affecting nuclear material control and accounting, a material control review shall be performed. Changes shall be approved by the Measurement Control Program Manager or designee.

Records of completed cross-functional reviews shall be maintained in accordance with Section 11.7, Records Management, for all changes to procedures involving licensed materials or QA Level 1 and QA Level 2 items and activities.

11.4.5 Distribution of Procedures

Originally issued approved procedures and approved procedure revisions are distributed in a controlled manner by document control.

Document Control shall establish and maintain an index of the distribution of copies of facility procedures. Revisions are controlled and distributed in accordance with this index. Indexes are reviewed and updated on a periodic basis or as required.

Department Managers or their designees shall be responsible for ensuring personnel doing work which require the use of the procedures have ready access to controlled copies of the procedures.

11.5 AUDITS AND ASSESSMENTS

AES will have a tiered approach to verifying compliance to procedures and performance to regulatory requirements. Audits are focused on verifying compliance with regulatory and procedural requirements and licensing commitments. Assessments are focused on effectiveness of activities and ensuring that QA Level 1 and QA Level 2 items are reliable and are available to perform their intended safety functions. This approach includes performing Assessments and Audits on critical work activities associated with facility safety, environmental protection and other areas as identified via trends.

Assessments are divided into two categories that will be owned and managed by the line organizations as follows:

- Management Assessments conducted by the line organizations responsible for the work activity
- Independent Assessments conducted by individuals not involved in the area being assessed.

Audits of work activities associated with QA Level 1 and QA Level 2 items and activities will be the responsibility of the QA Department.

Audits and assessments are performed to assure that facility activities are conducted in accordance with the written procedures and that the processes reviewed are effective. The audit program will apply as a minimum to radiation protection, criticality safety control, hazardous chemical safety, emergency management, quality assurance, configuration management, maintenance, training and qualification, procedures, incident investigations, records management, and industrial safety including fire protection, and environmental protection as these subjects relate to safety.

Audits and assessments shall be performed routinely by qualified staff personnel that are not directly responsible for production activities. Deficiencies identified during the audit or assessment requiring corrective action shall be forwarded to the responsible manager of the applicable area or function for action in accordance with the CAP procedure. Future audits and assessments shall include a review to evaluate if corrective actions have been effective.

The Quality Assurance Department shall be responsible for audits. Audits shall be performed in accordance with a written plan that identifies and schedules audits to be performed. Audit team members shall not have direct responsibility for the function and area being audited. Team members shall have technical expertise or experience in the area being audited and shall be indoctrinated in audit techniques. Audits shall be conducted on an annual basis.

The results of the audits shall be provided in a written report in a timely manner to the AES President, Plant Manager, the Safety Review Committee (SRC), and the Managers responsible for the activities audited. Deficiencies noted in the audits shall be responded to promptly by the responsible Managers or designees, entered into the CAP and tracked to completion and re-examined during future audits to ensure corrective action has been completed.

Records of the instructions and procedures, persons conducting the audits or assessments, and identified violations of license conditions and corrective actions taken shall be maintained.

11.5.1 Activities to be Audited or Assessed

Audits and assessments are conducted for the areas of:

- Radiation safety
- Nuclear criticality safety
- Chemical safety
- Industrial safety including fire protection
- Environmental protection
- Emergency management
- QA
- Configuration management
- Maintenance
- Training and qualification
- Procedures
- CAP/Incident investigation
- Records management.

Assessments of nuclear criticality safety, performed in accordance with ANSI/ANS-8.19-1996 (ANSI, 1996), will ensure that operations conform to criticality requirements.

11.5.2 Scheduling of Audits and Assessments

A schedule is established that identifies audits and assessments to be performed and the responsible organization assigned to conduct the activity. The frequency of audits and assessments is based upon the status and safety importance of the activities being performed and upon work history. The system of audits and assessments shall be designed to ensure comprehensive program oversight every three years. The audit and assessment schedule is reviewed periodically and revised as necessary to ensure coverage commensurate with current and planned activities.

Nuclear Criticality safety audits are conducted and documented quarterly such that all aspects of the Nuclear Criticality Safety Program will be audited at least every two years. The Operations Department is assessed periodically to ensure that nuclear critical safety procedures are being followed and the process conditions have not been altered to adversely affect nuclear criticality safety. The frequency of these assessments is based on the controls identified in the NCS analyses and NCS evaluations. Assessments are conducted at least semi-annually. In addition, weekly nuclear criticality safety walkthroughs of UF_6 process areas are conducted and documented.

11.5.3 Procedures for Audits and Assessments

Internal and external audits and assessments are conducted using approved procedures that meet the QA Program requirements. These procedures provide requirements for the following audit and assessment activities:

- Scheduling and planning of the audit and assessment
- Certification requirements of audit personnel
- Development of audit plans and audit and assessment checklists as applicable
- Performance of the audit and assessment
- Reporting and tracking of findings to closure
- Closure of the audit and assessment.

The applicable procedures emphasize reporting and correction of findings to prevent recurrence.

Audits and assessments are conducted by:

- Using the approved audit and assessment checklists as applicable
- Interviewing responsible personnel
- Performing plant area walkdowns
- Reviewing controlling plans and procedures
- Observing work in progress
- Reviewing completed QA documentation.

Audit and assessment results are tracked in the Corrective Action Program. The data is periodically analyzed for potential trends and needed program improvements to prevent recurrence and/or for continuous program improvements. The resulting trend is evaluated and reported to applicable management. This report documents the effectiveness of management measures in controlling activities, as well as deficiencies. Deficiencies identified in the trend report require corrective action in accordance with the applicable CAP procedure. The QA organization also performs follow up reviews on identified deficiencies and verifies completion of corrective actions reported as a result of the trend analysis.

The audit and for assessment team leader is required to develop the audit and/or assessment report documenting the findings, observations, and recommendations for program improvement. These reports provide management with documented verification of performance against established performance criteria for QA Level 1 and QA Level 2 items and activities. These reports are developed, reviewed, approved, and issued following established formats and protocols detailed in the applicable procedures. Responsible managers are required to review the reports and provide any required responses due to reported findings.

Corrective actions following issuance of the audit and/or assessment report require compliance with the CAP procedure. Audit reports are required to contain an effectiveness evaluation and statement for each of the applicable QA program elements reviewed during the audit. The audit/assessment is closed with the proper documentation as required by the applicable audit and assessment procedure. The QA organization will conduct follow-up audits or assessments to verify that corrective actions were taken in a timely manner. In addition, future assessments will include a review to evaluate if corrective actions have been effective.

11.5.4 Qualifications and Responsibilities for Audits and Assessments

The QA Manager initiates audits. The responsible Lead Auditor and QA Manager determines the scope of each audit. The QA Manager may initiate special audits or expand the scope of

audits. The Lead Auditor directs the audit team in developing checklists, instructions, or plans and performing the audit. The audit shall be conducted in accordance with the checklists, but the scope may be expanded by the audit team during the audit. The audit team consists of one or more auditors.

Auditors and lead auditors are responsible for performing audits in accordance with the applicable QA procedures. Auditors and lead auditors hold certifications as required by the QA Program. Additional details can be found in the QAPD. Before being certified under the AES QA Program, auditors must complete training on the following topics:

- AES QA Program
- Audit fundamentals, including audit scheduling, planning, performance, reporting, and follow-up action involved in conducting audits
- Objectives and techniques of performing audits
- On-the-job training.

Certification of auditors and lead auditors is based on the QA Manager's evaluation of education, experience, professional qualifications, leadership, sound judgment, maturity, analytical ability, tenacity, and past performance and completion of QA training courses. A lead auditor must also have participated in a minimum of five QA audits or audit equivalent within a period of time not to exceed three years prior to the date of certification. Audit equivalents include assessments, pre-award evaluations or comprehensive surveillances (provided the prospective lead auditor took part in the planning, checklist development, performance, and reporting of the audit equivalent activities). One audit must be a nuclear-related QA audit or audit equivalent within the year prior to certification.

Personnel performing assessments do not require certification, but they are required to complete QA orientation training, as well as training on the assessment process. The nuclear criticality safety assessments are performed under the direction of the criticality safety staff. Personnel performing these assessments do not report to the production organization and have no direct responsibility for the function or area being assessed.

The QAPD, Section 18, Audits, provides additional details regarding the QA Audit program requirements.

11.6 INCIDENT INVESTIGATIONS AND CORRECTIVE ACTION PROCESS

11.6.1 Incident Investigations

The incident investigation process is a simple mechanism available for use by any person at the facility for reporting deficiencies, abnormal events and potentially unsafe conditions or activities. Abnormal events that potentially threaten or lessen the effectiveness of health, safety or environmental protection will be identified and reported to and investigated by the EHS&L Manager. Each event will be considered in terms of its requirements for reporting in accordance with regulations and will be evaluated to determine the Level of investigation required. The process of incident identification, investigation, root cause analysis, environmental protection analysis, recording, reporting, and follow-up shall be addressed in and performed by written CAP procedures. Radiological, criticality, hazardous chemical, and industrial safety requirements shall be addressed. Guidance for classifying occurrences shall be contained in CAP procedures, including examples of threshold off-normal occurrences. The depth of the investigation will depend upon the severity of the classified incident in terms of the Levels of uranium released and/or the degree of potential for exposure of workers, the public or the environment.

The EHS&L Manager is responsible for:

- Maintaining a list of agencies to be notified
- Determining if a report to an agency is required
- Notifying the agency when required.

The licensing organization has the responsibility for all appropriate communications with government agencies.

The EHS&L Manager or designee shall maintain a record of corrective actions to be implemented as a result of off-normal occurrence investigations in accordance with CAP procedures. These corrective actions shall include documenting lessons learned, and implementing worker training where indicated, and shall be tracked to completion by the EHS&L Manager or designee.

Specifics of the Incident Investigation process are as follows:

1. AES will establish a process to investigate abnormal events that may occur during operation of the facility, to determine their specific or generic root cause(s)and generic implications, to recommend corrective actions, and to report to the NRC as required by 10 CFR 70.50 (CFR, 2008d) and 70.74 (CFR, 2008e). The investigation process will include a prompt risk-based evaluation and, depending on the complexity and severity of the event, one individual may suffice to conduct the evaluation. The investigator(s) will be independent from the line function(s) involved with the incident under investigation and are assured of no retaliation for participating in investigations. Investigations will begin within 48 hours of the abnormal event, or sooner, depending on safety significance of the event. The record of IROFS failures required by 10 CFR 70.62(a)(3) (CFR, 2008f) will be reviewed as part of the investigation. Record revisions necessitated by post-failure investigation conclusions will be made within five working days of the completion of the investigation.
2. Qualified internal or external investigators are appointed to serve on investigating teams when required. The teams will include at least one process expert and at least one team member trained in root cause analysis.

3. AES will monitor and document corrective actions through completion.
4. AES will maintain auditable records and documentation related to abnormal events, investigations, and root cause analyses so that "lessons learned" may be applied to future operations of the facility. For each abnormal event, the incident report includes a description, contributing factors, a root cause analysis, findings, and recommendations. Relevant findings are reviewed with all affected personnel. Details of the event sequence will be compared with accident sequences already considered in the ISA, and the ISA Summary will be modified to include evaluation of the risk associated with accidents of the type actually experienced.

AES will develop CAP procedures for conducting an incident investigation, and the procedures will contain the following elements:

1. A documented plan for investigating an abnormal event.
2. A description of the functions, qualifications, and/or responsibilities of the manager who would lead the investigative team and those of the other team members; the scope of the team's authority and responsibilities; and assurance of cooperation of management.
3. Assurance of the team's authority to obtain all the information considered necessary and its independence from responsibility for or to the functional area involved in the incident under investigation.
4. Retention of documentation relating to abnormal events for two years or for the life of the operation, whichever is longer.
5. Guidance for personnel conducting the investigation on how to apply a reasonable, systematic, structured approach to determine the specific or generic root cause(s) and generic implications of the problem.
6. Requirements to make available original investigation reports to the NRC on request.
7. A system for monitoring the completion of appropriate corrective actions.

11.6.2 Corrective Action Process

The AES QA Program identifies the responsibilities and provides authority for those individuals involved in quality activities to identify any condition adverse to quality, such as failures, malfunctions, deficiencies, deviations, defective materials and equipment, and non-conformances. These individuals identify and document conditions adverse to quality, analyze and determine how the conditions can be corrected or resolved, and take such steps as necessary to implement corrective actions in accordance with documented procedures.

The QA Program requires regularly scheduled audits and assessments to ensure that needed corrective actions are identified. AES employees have the authority and responsibility to initiate the corrective action process if they discover deficiencies. The QA Program contains procedures for identifying, reporting, resolving, documenting, and analyzing conditions adverse to quality. Reports of conditions adverse to quality are analyzed to identify trends in quality performance. Significant conditions adverse to quality and significant trends are reported to senior management in accordance with CAP procedures.

Follow-up action is taken by the QA Manager to verify proper and timely implementation of corrective action.

Conditions adverse to quality, the cause of the conditions and the corrective action taken to preclude repetition are documented and reported to management for review and assessment in accordance with CAP procedures.

The QAPD, Section 16, Corrective Action, provides additional details regarding the CAP requirements.

11.7 RECORDS MANAGEMENT

Records management shall be performed in a controlled and systematic manner in order to provide identifiable and retrievable documentation. Applicable design specifications, procurement documents, or other documents specify the QA records to be generated by, supplied to, or held, in accordance with approved procedures. QA records are not considered valid until they are authenticated and dated by authorized personnel.

The AES QA Program requires procedures for reviewing, approving, handling, identifying, retention, retrieval and maintenance of quality assurance records. These records include the results of tests and inspections required by applicable codes and standards, construction, procurement and receiving records, personnel certification records, design calculations, purchase orders, specifications and amendments, procedures, incident investigation results and approvals or corrective action taken, various certification forms, source surveillance and audit reports, component data packages, and any other QA documentation required by specifications or procedures. These records are maintained at locations where they can be reviewed and audited to establish that the required quality has been assured.

For computer codes and computerized data used for activities relied on for safety, as specified in the ISA Summary, procedures are established for maintaining readability and usability of older codes and data as computing technology changes. For example, procedures allow older forms of information and codes for older computing equipment to be transferred to contemporary computing media and equipment.

The facility maintains a Master File that access to, and use of is controlled. Documents in the Master File shall be legible and shall be identifiable as to the subject to which they pertain. Documents shall be considered valid only if stamped, initialed, signed or otherwise authenticated and dated by authorized personnel. Documents in the Master File may be originals or reproduced copies. Computer storage of data may be used in the Master File.

In order to preclude deterioration of records in the Master File, the following requirements are applicable:

A. Records shall not be stored loosely. Records shall be firmly attached in binders or placed in folders or envelopes. Records should be stored in steel file cabinets.

B. Special processed records, e.g., radiographs, photographs, negatives, microfilm, which are light-sensitive, pressure-sensitive and/or temperature-sensitive, shall be packaged and stored as recommended by the manufacturer of these materials.

C. Computer storage of records shall be done in a manner to preclude inadvertent loss and to ensure accurate and timely retrieval of data. Dual-facility records storage uses an electronic data management system and storage of backup tapes in a fireproof safe.

The Master File storage system shall provide for the accurate retrieval of information without undue delay. Written instructions shall be prepared regarding the storage of records in a Master File, and a supervisor shall be designated the responsibility for implementing the requirements of the instructions. These instructions shall include, but not necessarily be limited to the following.

A. A description of the location(s) of the Master File and an identification of the location(s) of the various record types within the Master File

B. The filing system to be used

C. A method for verifying that records received are in agreement with any applicable transmittal documents and are in good condition. This is not required for documents generated within a section for use and storage in the same sections' satellite files.

D. A method for maintaining a record of the records received

E. The criteria governing access to and control of the Master File

F. A method for maintaining control of and accountability for records removed from the Master File

G. A method for filing supplemental information and for disposing of superseded records.

When a single records storage facility is used, it shall be reviewed for adequacy of protecting the records by a person competent in the technical field of fire protection and fire extinguishing. Dual records storage facilities are not subject to this review.

Records related to health and safety shall be maintained in accordance with the requirements of Title 10, Code of Federal Regulations. The following records shall be retained for at least the periods indicated in accordance with the Records Management procedures which specifies retention periods

The following are examples of records that shall be retained:

- Operating logs
- Procedures
- Supplier QA documentation for equipment, materials, etc.
- Nonconforming item reports
- Test documentation/test results - preoperational/operational
- Facility modification records
- Drawings/specifications
- Procurement documents (e.g., purchase orders, purchase requisitions)
- Nuclear material control and accounting records
- Maintenance activities including calibration records
- Inspection documentation (plant processes)
- Audit reports
- Reportable occurrences and compliance records
- Completed work orders
- License conditions (specifications) records
- Software verification records
- System descriptions
- As-built design documentation packages
- Regulatory reports and corrective action.

Other retention times are specified for other facility records as necessary to meet applicable regulatory requirements. These retention times are indicated in facility administrative procedures.

QAPD, Section 17, Quality Assurance Records, of this chapter provides additional details regarding records management requirements

11.8 OTHER QA ELEMENTS

The QA Program and its supporting manuals, procedures and instructions are applicable to items and activities designated as QA Level 1 and QA Level 2

The QA Manager is responsible for developing and revising the QA Program and assuring it is in compliance with applicable regulations, codes and standards. The QA Manager approves the supporting manuals, procedures, and revisions for their respective scope of responsibility.

The QA Program specifies mandatory requirements for performing activities affecting quality and is set forth in procedures which are distributed on a controlled basis to organizations and individuals responsible for quality. Revisions to these procedures are also distributed on a controlled basis. Applicable portions of the QA Program are documented, approved and implemented prior to undertaking an activity.

A management assessment of the QA program is performed at least six months prior to scheduled receipt of licensed material on the site. Items identified as needing completion or modification are entered into the CAP and corrective action completed before scheduled receipt of licensed material. AES Management monitors the QA program prior to this initial management assessment through project review meetings and annual assessments. This management assessment along with integrated schedules and program review meetings ensure that the QA program is in place and effective prior to receiving licensed material.

The AES QA program for design, construction, and preoperational testing continues simultaneously with the QA program for the operational phase while construction activities are in progress.

Anyone may propose changes to the QA Program supporting manuals and procedures. When reviewed by the QA Manager and found acceptable and compatible with applicable requirements, guidelines and AES policy, the changes may be implemented. The QA Program and supporting manuals and procedures are reviewed periodically to ensure they are in compliance with applicable regulations, codes, and standards. New or revised regulations, codes, and standards are reviewed for incorporation into the QA Program and supporting manuals and procedures as necessary.

Personnel performing activities covered by the QA program shall perform work in accordance with approved procedures, and must demonstrate suitable proficiency in their assigned tasks. Formal training programs are established for quality assurance policies, requirements, procedures, and methods. Ongoing training is provided to ensure continuing proficiency as procedural requirements change. New employees are required to attend a QA indoctrination class on authority, organization, policies, manuals, and procedures.

Additional formal training is conducted in specific topics such as NRC regulations and guidance, procedures, auditing, and applicable codes and standards. Supplemental training is performed as required. On-the-job training is performed by the employee's supervisor in QA area-specific procedures and requirements. Training records are maintained for each person performing quality-related job functions.

The AES President assesses the scope, status, adequacy and regulatory compliance of the QA Program through regular meetings and correspondence with the Plant Manager and the AES QA organization. Additionally, AES QA, through the QA Manager, periodically informs the AES President and Plant Manager of quality concerns that need management resolution.

AES participates in the planning and scheduling for system turnover as construction is completed. Prior to system turnover, written procedures are developed for control of the transfer

of systems, structures, components and associated documentation. The procedures include checklists, marked drawings, documentation lists, system status, and receipt control.

Major work activities contracted by AES shall be identified and controlled. Principal contractors shall be required to comply with the portions of QA Program applicable to the scope of their work. The performance of contracted activities shall be formally evaluated by AES commensurate with the importance of the activities to safety.

11.9 REFERENCES

ANSI, 1991. Nuclear Criticality Safety Training, ANSI/ANS-8.20-1991, American National Standards Institute/American Nuclear Society, 1991.

ANSI, 1994. Administrative Controls and Quality Assurance for the Operational Phase of Nuclear Power Plants, ANSI/IANS-3.2-1994, American National Standards Institute/American Nuclear Society, 1994.

ANSI, 1996. Administrative Practices for Nuclear Criticality Safety, ANSI/ANS-8.19-1996, American National Standards Institute/American Nuclear Society, 1996.

CFR, 2008a. Title 10, Code of Federal Regulations, Section 70.61, Performance requirements, 2008.

CFR, 2008b. Title 10, Code of Federal Regulations, Section 70.72, Facility changes and change process, 2008.

CFR, 2008c. Title 10, Code of Federal Regulations, Part 21, Reporting of Defects and Noncompliance, 2008.

CFR, 2008d. Title 10, Code of Federal Regulations, Section 70.50, Reporting requirements, 2008.

CFR, 2008e. Title 10, Code of Federal Regulations, Section 70.74, Additional reporting requirements, 2003.

CFR, 2008f. Title 10, Code of Federal Regulations, Section 70.62, Safety program and integrated safety analysis, 2003.

CFR, 2008g. Title 10, Code of Federal Regulations, Section 70.62(d), Management measures, 2008.

CFR, 2008h. Title 10, Code of Federal Regulations, Section 70.4, Definitions, 2008.

LES, 2005. National Enrichment Facility Safety Analysis Report, Revision 7, June 2005.

NRC, 2002. Standard Review Plan for the Review of a License Application for a Fuel Cycle Facility, NUREG-1520, U.S. Nuclear Regulatory Commission, March 2002.

NRC, 2005. Safety Evaluation Report for the National Enrichment Facility in Lea County, New Mexico, June 2005.