RESPONSE TO LOSS OF SECONDARY HEAT SINK

USE CATEGORY: I

REVISION SUMMARY **Biennial Review Performed Yes X No ____**

This procedure was revised to incorporate human factor enhancements and ERG, Rev. 1C guidance. The changes are summarized below.

1. Flow Chart - The page layout was changed to optimize space usage and minimize transition errors between steps and between pages. These changes were made to incorporate human factor enhancements identified in simulator training.
2. Flow Chart & Basis Document - Old Step 7 was moved (If a charging pump is not available then the operator is directed to Bleed and Feed) to Step 4 and old Steps 4 and 5 were renumbered to Steps 5 and 6 per ERG Rev. 1C.
3. Flow Chart & Basis Document - The step "STOP ALL RCPs" was moved prior to initiating RCS Bleed and Feed. This step was moved based on simulator performance deficiencies.
4. Flow Chart & Basis Document - Step 8.1 was changed to eliminate the alignment of AF valves if AFPs are not running. If AFPs are not running, operators are sent to investigate and correct the cause and then directed to Step 9. This step was changed per simulator training request. This change still meets the intent of the ERG.
5. Flow Chart & Basis Document - New Steps 8.2, 14.1 and 21.1 "HAS BLEED AND FEED BEEN INITIATED" were added to remind personnel that Bleed and Feed must be secured prior to returning to the procedure in effect. These steps were added per simulator training request based on simulator performance deficiencies.
6. Flow Chart - Additional information was added (side box) to Step 12.3 stating the intent of resetting the FW interlock. This information was added based on simulator performance deficiencies.
7. Flow Chart & Basis Document - Step 21, direction was added to "MAINTAIN SELECTED SG PRESSURE LESS THAN 575 PSIG." Deviation 3 and the associated justification were added.
8. Flow Chart & Basis Document - Step 26.2 was changed to allow alignment to any of the alternate water sources described in S1.OP-SO.AF-0001. Guidance was added to select only one SG for depressurization to clarify the intent of the step. Deviation 2 and the associated justification were added.

IMPLEMENTATION REQUIREMENTS **Effective Date: 12/18/98**

APPROVED: _____ **MANAGER - SALEM OPERATIONS** 12/16/98 **Date**

RESPONSE TO LOSS OF SECONDARY HEAT SINK

USE CATEGORY: I

REVISION SUMMARY (CONTINUED)

9. Flow Chart & Basis Document - New continuous action Step 26.5, "WHEN FEEDWATER FLOW IS ESTABLISHED TO SGs THEN STOP DEPRESSURIZATION" was added to provide additional guidance once FW flow is established. This step was added based on simulator performance deficiencies.
10. Flow Chart - In the Step 35 side box, the means of establishing FW to a SG were changed from Steps 8, 11, 26.2, 20 to 8, 11, 20, 26.2. (In addition, "SW" was changed to "ALTERNATE WATER SOURCE" to be consistent with changes made to Step 26.2.) The order for establishing FW was changed per simulator training request.
11. Flow Chart & Basis Document - Step 36 directions related to feeding hot dry steam generators was replaced by direction to contact the TSC for guidance on restoration of remaining intact SGs with WR levels less than 11% (15% adverse). Deviation 2 and the associated justification were added. These changes incorporate Maintenance item DW-95-040.
12. Flow Chart & Basis Document - Old Steps 40, 41, 42, 43, 44, 45, and 48 were deleted and replaced by new Step 40. ERG Rev. 1C changed the methodology for terminating SI while in FRHS-1. The previous method required specific subcooling criteria be met before securing one ECCS pump. After one ECCS pump was stopped the procedure checked subcooling again prior to securing additional ECCS pumps. The new method, when subcooling is greater than 50°F and RVLIS is greater than 57% then all but one charging pump is secured. This SI termination methodology, similar to the SI termination used in TRIP-3, reduces SI termination time and reduces ECCS flow to the RCS which prevents PZR overfill.
13. Flow Chart & Basis Document - A note was added for Step 40 "AFTER CLOSING A PZR PORV IT MAY BE NECESSARY TO WAIT SEVERAL MINUTES FOR RCS PRESSURE TO RISE TO CHECK IF SI CAN BE TERMINATED." This note was added due to the new SI termination criteria in ERG Rev. 1C. Deviation 1 and the associated justification were added.
14. Flow Chart & Basis Document - New Steps 41 and 42 replaced old Step 46. These steps restructured the way PORVs are closed as a result of the new SI termination criteria. This change incorporated ERG Rev. 1C guidance.
15. Flow Chart & Basis Document - Old Step 47 was replaced by new Step 43. Directions were added to close all PORVs and if any PORV remains open to transition to LOCA-1. These changes are a result of the new SI termination criteria in ERG Rev. 1C.

RESPONSE TO LOSS OF SECONDARY HEAT SINK

USE CATEGORY: I

REVISION SUMMARY (CONTINUED)

16. Flow Chart & Basis Document - New step 44 was added which provides direction to control feed flow and dump steam, as necessary, to stabilize RCS T-Hot, per ERG Rev. 1C.
17. The following minor/editorial changes were made in the Basis Document:
    a. EOP Step 3 - The last sentence in the first paragraph of the ERG Basis was revised. ERG Deviation 1 and the associated justification were deleted.
    b. EOP Step 4 - Maintenance item DW-93-038 was deleted from the ERG Basis. Last sentence in the ERG Basis was added. ERG Deviation 1 and the associated justification were added.
    c. EOP Steps 5 and 6 - Maintenance item DW-89-056 was moved from the ERG Basis to the Supplemental Information Section. ERG Deviation 2 and the associated justification were added.
    d. EOP Step 14 - Maintenance item DW-89-056 was moved from the ERG Basis to the Supplemental Information Section. ERG Deviation 2 and the associated justification were added.
    e. EOP Steps 15, 16, 17, 18, and 19 - Maintenance item DW-92-025 was deleted from the ERG Basis - ERG Rev. 1C incorporated this item,
    f. EOP Step 20 - Maintenance item DW-89-056 was deleted from the ERG Basis. A minor wording change was made to the Justification for Deviation 2.
    g. EOP Step 21 - Eliminated the word "intact" in the first sentence and Maintenance item DW-89-056 was moved from the ERG Basis to the Supplemental Information Section.
    h. EOP Step 22 - Maintenance item DW-89-056 was moved from the ERG Basis to the Supplemental Information Section.
    i. EOP Step 25 - Maintenance item DW-93-038 was deleted from the ERG - ERG Rev. 1C incorporated this item.
    j. EOP Step 26 - Maintenance item DW-93-020 was deleted from the ERG - ERG Rev. 1C incorporated this item. The first ERG Knowledge item was deleted – it was not applicable to Salem. "PRZR" was changed to "PZR" in the ERG Basis for consistency. "Demin water" was added to the plant specific information as a low pressure water source.
    k. EOP Step 27 - Maintenance item DW-91-017 was deleted from the ERG Basis - ERG Rev. 1C incorporated this item.
    l. EOP Step 34 - The ERG Basis has numerous references to ERG steps - These references were revised to reflect the corresponding EOP steps. In addition, the referenced ERG "orange" path was changed to its EOP equivalent "purple" path.
    m. EOP Steps 35 and 36 - Maintenance item DW-89-056 was moved from the ERG Basis to the Supplemental Information Section.

RESPONSE TO LOSS OF SECONDARY HEAT SINK

USE CATEGORY: I

REVISION SUMMARY (CONTINUED)

n. EOP Step 37 - The ERG Basis reference to an ERG step was revised to reflect the equivalent EOP step and the referenced ERG "orange" path was changed to its EOP equivalent "purple" path. In addition, Maintenance item DW-89-056 was moved from the ERG Basis to the Supplemental Information Section.

o. EOP Step 40 - "PRZR" was changed to "PZR" in the ERG Basis for consistency. A spelling error was corrected in Deviation 1. ERG Deviation 2 and the associated justification were added. "High-head SI pumps" was changed to "SI pumps" and "charging/SI pumps" was changed to "charging pumps" for consistency (ERG Step 26).

p. EOP Steps 41 & 42 - "PRZR" was changed to "PZR" in 11 places for consistency.

q. EOP Step 43 - The ERG Basis reference to an ERG transition was revised to reflect the corresponding EOP transition. "PRZR" was changed to "PZR" in the ERG Basis for consistency.

r. The EOP/ERG Correlation Table was revised.

Note: Revision bars were not used to identify changes to this EOP.

EMERGENCY OPERATING PROCEDURE
2-EOP-FRHS-1
RESPONSE TO LOSS OF SECONDARY HEAT SINK

1.0 Entry Conditions

See Flowchart

2.0 Operator Actions

2.1 Immediate Actions

None

2.2 Subsequent Actions

See Flowchart

3.0 Attachment List

3.1 Tables

None

3.2 Figures

None

3.3 Graphs

None

3.4 Checkoff Sheets

None

3.5 Attachments

1 - Major Action Categories

MAJOR ACTION CATEGORIES

- ATTEMPT RESTORATION OF FEED FLOW TO STEAM GENERATORS
- INITIATION OF RCS BLEED AND FEED HEAT REMOVAL
- RESTORE AND VERIFY SECONDARY HEAT SINK
- TERMINATION OF RCS BLEED AND FEED HEAT REMOVAL

SALEM GENERATING STATION

2-EOP-FRHS-1
RESPONSE TO LOSS OF SECONDARY HEAT SINK

BASIS DOCUMENT

EOP Step No: ENTRY CONDITIONS

ERG Step No: ENTRY CONDITIONS

EOP Step:

- EOP-CFST-1, HEAT SINK - RED
- EOP-TRIP-1 STEP 20.1

Purpose:

To provide the plant conditions for entry into this procedure.

ERG Basis:

This EOP is entered from EOP-CFST-1 Heat Sink Status Tree on a RED condition. This EOP is also entered from EOP-TRIP-1, EOP Step 20.1 when minimum AFW flow is not verified AND NR levels in all SGs are less than 9% (15% for adverse containment).

This EOP provides actions to respond to a loss of secondary heat sink in all SGs.

EOP Basis:

Same as ERG basis.

Supplemental Information:

None

Setpoints and Numerical Values:

None

ERG Deviations:

No deviation from the ERG.

EOP Step No: Step 1

ERG Step No: Caution 1-1

EOP Step:

IS TOTAL AFW FLOW LESS THAN 22E04 LB/HR DUE TO OPERATOR ACTIONS

Purpose:

To alert the operator that the performance of EOP-FRHS-1 is required only if minimum feed flow capability is lost.

ERG Basis:

During the performance of certain procedures, it is possible that the SG level is below the narrow range and the total feed flow is throttled to less than the minimum AFW flow requirement. If the feed flow is reduced due to operator action to minimize feed flow as instructed in these procedures and the capability of providing the minimum feed flow is available (i.e., pumps and valves in the Feedwater System are capable of being used if necessary), then a transfer from these procedures is not required and procedure EOP-FRHS-1 should not be performed.

EOP Basis:

Same as ERG basis.

Supplemental Information:

ERG Knowledge Item: The operator must be aware that the availability to provide feed flow to the SGs determines if EOP-FRHS-1 is to be performed.

Setpoints and Numerical Values:

Value	Number	Description
$22x10^4$ lb/hr	S.02	The minimum safeguards AFW flow requirement for heat removal plus allowances for normal channel accuracy (typically one AFW pump capacity at SG design pressure).

ERG Deviations:

DEV.1 Deleted the ERG caution on applicability of this procedure.

JUST. Since the EOP Writer's Guide does not allow hidden actions in cautions and notes, the ERG caution was converted into an action step. [SD-20]

EOP Step No: Step 2

ERG Step No: Caution 1-2

EOP Step:

IF AT LEAST ONE INTACT OR RUPTURED SG IS AVAILABLE,
THEN DO NOT FEED A FAULTED SG

Purpose:

To alert the operator to not reestablish feed flow to a faulted SG if an intact or ruptured SG is available to receive the feed flow.

ERG Basis:

Re-establishment of feed flow to a SG may result in thermal or mechanical shocks to the SG tubes that could result in tube leakage or tube rupture. If feed flow is reestablished to a faulted SG and tube leakage resulted, control of the leakage would not be possible until the SG secondary boundary was restored. Flow restoration to a non-faulted SG will provide an effective and controllable secondary heat sink.

EOP Basis:

Same as ERG basis.

Supplemental Information:

None

Setpoints and Numerical Values:

None

ERG Deviations:

DEV.1 Deleted the ERG caution on not feeding any faulted SG.

JUST. Since the EOP Writer's Guide does not allow hidden actions in cautions and notes, the ERG caution was converted into a continuous action step. [SD-20]

EOP Step No: Step 3

ERG Step No: Step 1

EOP Step:

IS RCS PRESSURE GREATER THAN ANY INTACT OR RUPTURED SG PRESSURE
[SG HEAT SINK STATUS]

Purpose:

To check if a secondary (SG) heat sink is required for heat removal.

ERG Basis:

Before implementing actions to restore flow to the SGs, the operator should check if secondary heat sink is required. For larger LOCA break sizes, the RCS will depressurize below the intact SG pressures. The SGs no longer function as a heat sink and the core decay heat is removed by the RCS break flow. For this range of LOCA break sizes, the secondary heat sink is not required and actions to restore secondary heat sink are not necessary. For these cases, the operator returns to the procedure and step in effect.

Since EOP Step 22 directs the operator to return to EOP Step 3 if the loss of secondary heat sink parameters are not exceeded, break sizes that take longer to depressurize the RCS will be detected on subsequent passes through this step.

If RCS temperature is low enough to place the RHR System in service, then the RHR System is an alternate heat sink to the secondary system. Therefore, an attempt is made to place the RHR System in service in parallel to the attempts to reestablish feedwater flow. RCS pressure must be below normal RHR System pressure limits.

EOP Basis:

Same as ERG basis.

Supplemental Information:

ERG Knowledge Item: The operator must be able to place the RHR System in service before the temperature limits are exceeded to make this alternate heat sink a valid option. Efforts to restore feedwater flow to the SGs should not be delayed if the RHR System is not a valid option.

EOP Step No: Step 3 (CONTINUED)

Setpoints and Numerical Values:

Value	Number	Description
350°F	F.09	Temperature requirement for placing RHR System in service including allowances for normal channel accuracy.

ERG Deviations:

No deviation from the ERG.

EOP Step No: Step 4

ERG Step No: Step 2

EOP Step:

IS 21 OR 22 CHARGING PUMP AVAILABLE
[CHG PUMP STATUS]

Purpose:

To determine if a minimum flow injection capability from the SI System to the RCS at high RCS pressure exists.

ERG Basis:

The loss of heat sink analyses for high pressure SI plants assume availability of a centrifugal charging pump. If the operator has positive knowledge that no centrifugal charging pump is available for use in RCS bleed and feed heat removal, then the operator is directed to EOP Step 23 for immediate initiation of the RCS bleed and feed using only the SI pumps as the feed source. The RCPs are tripped to extend the effectiveness of the remaining water inventory in the SGs.

EOP Basis:

Same as ERG basis.

Supplemental Information:

None

Setpoints and Numerical Values:

None

ERG Deviations:

DEV.1 Deleted stop all RCPs in the action step.

JUST. The direction to stop all RCPs was moved to the first step of the Bleed and Feed sequence of steps. This placed all steps relating to Bleed and Feed in one action sequence. Moving this step meets the requirements of the ERGs to stop the RCPs.

EOP Step No: Steps 5 and 6

ERG Step No: Caution 3-1

EOP Step:

(Step 5) IF WR LEVELS IN AT LEAST THREE SGs ARE LESS THAN 32% (36% ADVERSE), THEN IMMEDIATELY GO TO STEP 23 TO INITIATE RCS BLEED AND FEED
[BLEED AND FEED INITIATION CRITERIA]

(Step 6) IF RCS PRESSURE IS 2335 PSIG OR GREATER DUE TO LOSS OF SECONDARY HEAT SINK, THEN IMMEDIATELY GO TO STEP 23 TO INITIATE RCS BLEED AND FEED
[BLEED AND FEED INITIATION CRITERIA]

Purpose:

To alert the operator of the parameter indications which indicate that bleed and feed should be initiated.

ERG Basis:

If the operator cannot restore feedwater flow to the SGs, conditions will degrade to the point where RCS bleed and feed must be established to minimize core uncovery and prevent inadequate core cooling. The parameter and setpoints should be monitored during subsequent steps to reestablish feed flow. An in-depth discussion of this is provided in Subsection 2.2, RCS Bleed and Feed Heat Removal, of the ERG background document.

EOP Basis:

Same as ERG basis.

EOP Step No: Steps 5 and 6 (CONTINUED)

Supplemental Information:

ERG Knowledge Item: The importance of establishing bleed and feed as an alternative heat sink to prevent core uncovery and inadequate core cooling.

ERG Knowledge Item: If PORV block valves are closed, they should be opened at this time unless they are closed to isolate a faulty PORV.

ERG Knowledge Item: When the RCPs are stopped due to loss of heat sink, RCS pressure and temperature are expected to increase slightly and stabilize below the PZR PORV setpoint. RCS pressure and temperature will continue to be relatively constant until SG dryout occurs (approximately 20 - 30 minutes). At this point, the primary-to-secondary heat transfer rate degrades and the RCS begins to heat up and repressurize and will eventually result in the opening of the PZR PORVs.

DW-89-056: Reference leg heatup errors should be included in the determination of the level setpoint for normal containment conditions.

This should not be confused with the onset of natural circulation in which the RCS pressure continues to increase after the RCPs are stopped and may reach the PZR PORV setpoint. The key to determining if the RCS pressure rise is due to loss of heat sink or natural circulation is the loop delta-T. The loop delta-T is expected to be large for natural circulation and small for a loss of heat sink since there is no heat transfer to the secondary.

Therefore, verifying a slowly increasing RCS pressure and temperature trend plus a large loop delta-T prior to the PORV opening confirms natural circulation whereas a relatively stable temperature and pressure and a small loop delta-T combined with SG wide range low level prior to the PORV opening confirms a loss of heat sink. (emphasis added in consideration of validation comment VA-296)

Setpoints and Numerical Values:

Value	Setpoint	Description
32% 2335 PSIG	X.01	Parameter and setpoint for diagnosing loss of secondary heat sink including allowances for normal channel accuracy.
36% 2335 PSIG	X.02	Parameter and setpoint for diagnosing loss of secondary heat sink including allowances for normal channel accuracy and post-accident transmitter errors.

ERG Deviations:

DEV.1 Deleted the ERG Caution on initiating bleed and feed.

JUST. Since the EOP Writer's Guide does not allow hidden actions in cautions and notes, the ERG Caution was converted into two continuous action steps. [SD-20]

EOP Step No: Steps 5 and 6 (CONTINUED)

ERG Deviations: (CONTINUED)

DEV.2 Moved stop all RCPs in the continuous action step.

JUST. The direction to stop all RCPs was moved to the first step of the Bleed and Feed sequence of steps. This placed all steps relating to Bleed and Feed in one action sequence. Moving this step meets the requirements of the ERGs to stop the RCPs.

EOP Step No: Step 7

ERG Step No: Caution 3-2

EOP Step:

IF "AFWST LEVEL LO-LO" ALARM ACTUATES (10.3%), THEN SHIFT AFW PUMP SUCTION TO AN ALTERNATE SOURCE IAW S2.OP-SO.AF-0001(Q) "AUXILIARY FEEDWATER SYSTEM OPERATION" WHILE CONTINUING WITH THIS PROCEDURE

Purpose:

To alert the operator that AFST level should be monitored and that an alternate water supply may be necessary.

ERG Basis:

If AFST level decreases below 10.3%, inadequate suction pressure may result in AFW pump trip. An alternate suction source should be provided.

EOP Basis:

Same as ERG basis.

Supplemental Information:

ERG Plant-Specific Information: Alternate suction sources for AFW pumps.

Setpoints and Numerical Values:

Value	Number	Description
10.3%	U.01	AFST low-low level switchover setpoint.

ERG Deviations:

DEV.1 Deleted ERG caution on alternate AFW suction supply.

JUST. Since the EOP Writer's Guide does not allow hidden actions in cautions and notes, the ERG caution was converted into a CAS action. [SD-20]

EOP Step No: Step 8

ERG Step No: Step 3

EOP Step:

CLOSE THE FOLLOWING VALVES:
- 21 THRU 24 GB4 (SG OUTLET)
- 21 THRU 24 SS94 (SG B/D SAMPLING)

[AFW FLOW RESTORATION]

Purpose:

To restore operation of the AFW System to reestablish an adequate secondary heat sink.

ERG Basis:

Prior to initiating actions to restore flow to at least one SG, the operator should ensure that the SG blowdown isolation and SG sample isolation valves on all SGs are closed. Although the valves will most likely be closed due to previous automatic actuation or operator manual action, it is possible that the valves may be open. If they are open, the operator should close the valves in order to preserve SG inventory.

The first attempt to restore feed flow is through operation of the AFW System. Initially, control room indications are checked for the potential causes of the AFW System failure to provide feed flow. If the cause of the failure cannot be corrected from the control room and/or a minimum feed flow failure cannot be corrected from the control room and/or a minimum feed flow of 22E04 lb/hr cannot be reestablished, an operator is dispatched to continue the AFW System restoration locally while the control room operators continue with EOP Step 9.

If 22E04 lb/hr of AFW flow is established, the operator returns to the procedure in effect.

EOP Basis:

Same as ERG basis.

Supplemental Information:

None

EOP Step No: Step 8 (CONTINUED)

Setpoints and Numerical Values:

Value	Setpoint	Description
$22x10^4$ lb/hr	S.02	The minimum safeguards AFW flow requirement for heat removal plus allowances for normal channel accuracy (typically one AFW pump capacity at SG design pressure).
95%	X.09	Valve demand for the AF21 control valve that will prevent runout of the AFW pump.

ERG Deviations:

DEV.1 Did not direct the operator to specifically check control room indications for cause of AFW failure.

JUST. The EOP checked to ensure that AFST level was sufficient in a previous step, therefore checking it in this step is not necessary. Checking AFW pump power supplies and AFW valve alignment will be accomplished as the operator attempts to manipulate these components as directed by the actions in this step.

DEV.2 Added a step "HAS FEED AND BLEED BEEN INITIATED"

JUST. This step was added to prevent operators from returning to procedure in effect with Bleed and Feed still in progress.

EOP Step No: Step 9

ERG Step No: Step 4

EOP Step:

STOP ALL RCPs
[AFW FLOW RESTORATION]

Purpose:

To stop RCPs in order to extend the time to restore feed flow to the SGs.

ERG Basis:

RCP operation results in heat addition to the RCS water. By tripping the RCPs, the effectiveness of the remaining water inventory in the SGs is extended, which extends the time at which the operator action to initiate bleed and feed must occur. This extension of time is additional time for the operator to restore feedwater flow to the SGs. Additional information is provided in subsection 2.5, Reactor Coolant Pump Operation, of the ERG background document.

EOP Basis:

Same as ERG basis.

Supplemental Information:

ERG Knowledge Item: Stopping all RCPs will result in an interim plant transient on RCS pressure and temperature as natural circulation flow conditions are established in the RCS. An example of this is shown in ERG Figures 6 and 7 where RCS pressure and temperature rise and reestablish new steady state conditions prior to SG dryout occurring. If rising RCS pressure and hot leg temperatures are the criteria for initiation of bleed and feed heat removal, the operator must evaluate whether these conditions are caused by an RCP trip or by a loss of secondary heat sink in order to determine if bleed and feed heat removal is to be established.

Setpoints and Numerical Values:

None

ERG Deviations:

No deviation from the ERG.

EOP Step No: Step 10

ERG Step No: Caution 5-1

EOP Step:

IF BLACKOUT LOADING OCCURS ON ANY VITAL BUS AFTER SI RESET,
THEN PERFORM ACTIONS PER TABLE A

Purpose:

To alert the operator of a possible configuration which would not provide automatic start of safeguards equipment.

ERG Basis:

With the SI signal reset, no further automatic signal will be generated to restart safeguards equipment. Normal sequencing of safeguards loads onto the emergency bus after diesel-generator startup will not occur. However, a "blackout" sequencer actuation is possible.

EOP Basis:

Same as ERG basis, with the following additional information:

EOP Steps 16 and 17 reset the SI signal. Resetting the SI signal removes the auto start signal to the safeguards equipment. If a blackout loading sequence occurs after the SI signal is reset, the operator may be required to restart additional safeguards equipment that was running prior to blackout loading sequence initiation. Table A provides the required actions to reset the SEC as well as a list of equipment which is to be loaded on the appropriate vital buses if required. The loading sequencer must be reset and required loads manually started if operation is required. This action is necessary because different equipment is started for blackout loading than for safeguards loading.

Supplemental Information:

None

Setpoints and Numerical Values:

None

EOP Step No: Step 10 (CONTINUED)

ERG Deviations:

DEV.1 Deleted ERG caution on blackout loading.

JUST. Since the EOP Writer's Guide does not allow hidden actions in cautions and notes, the ERG caution was converted into a continuous action step. [SD-20]

DEV.2 Added plant specific details for loading safeguards equipment after SI reset.

JUST. This guidance aids operators in performing these actions in a consistent manner. These details include information to assist the operator in restarting safeguards equipment following SI reset. If a blackout loading sequence occurs on any 4 KV vital bus with SI previously reset, then ECCS pumps and other safeguards equipment will not automatically start and must be manually operated if required since different equipment is started on a SEC blackout loading than on a safeguards loading. [SD-29]

EOP Step No: Steps 11, 12, and 13

ERG Step No: Step 5

EOP Step:

(Step 11) IS CONDENSATE SYSTEM IN OPERATION
[MAIN FEEDWATER ALIGNMENT]

(Step 12) IS AT LEAST ONE SGFP AVAILABLE
[MAIN FEEDWATER ALIGNMENT]

(Step 13) START ONLY ONE SGFP
[MAIN FEEDWATER ALIGNMENT]

Purpose:

To direct the operator in establishing main FW flow as an alternative (or supplement) to AFW flow.

ERG Basis:

Main FW is the next source of high pressure water readily available to the operator to use to reestablish the secondary heat sink. Prior to restoring main FW flow to the SGs, the operator verifies Condensate System operation to ensure a source of water to the main FW pumps. Then the main FW isolation valve status is checked. If feedwater isolation has occurred, various actions may be required, depending upon the plant specific logic for FW isolation, to reset SI and FW isolation signals and reopen the FW isolation valves. If either the Condensate System cannot be placed in service or no FW isolation valves can be opened, the operator is directed to EOP Step 22 to check the status of the secondary heat sink.

If the Condensate System is operational and FW isolation valves are open, then main FW is established by the operator. If main FW cannot be established, the operator is directed to EOP Step 15 to attempt to establish condensate flow.

EOP Basis:

Same as ERG basis.

EOP Step No: Steps 11, 12, and 13 (CONTINUED)

Supplemental Information:

ERG Plant-Specific Information: Plant-specific logic for FW isolation varies. For many plants, feedwater isolation occurs on a reactor trip (P-4) signal in combination with a low T_{avg} signal or on an SI signal. For a reactor trip with a low T_{avg}, the operator must manually reset a feedwater isolation retentive memory device in order to open the FW isolation and control valves. For SI actuation, the operator must reset the SI signal and the reactor trip breakers in addition to the retentive memory device in order to open the FW isolation and bypass valves. The operator must check which signals initiated the FW isolation and reset the appropriate signals.

Setpoints and Numerical Values:

Value	Setpoint	Description
10%	S.12	Maximum main feedwater flow rate when using the MFW pumps in response to a loss of heat sink (prior to bleed and feed).

ERG Deviations:

No deviation from the ERG.

EOP Step No: Step 14

ERG Step No: Step 6

EOP Step:

IS AT LEAST ONE SG NR LEVEL GREATER THAN 9% (15% ADVERSE)
[SG LEVEL STATUS]

Purpose:

To determine the success of main FW flow restoration.

ERG Basis:

Following actions to establish main FW flow to the SGs, the operator checks the SG NR level indications to determine if adequate flow has been established to maintain the secondary heat sink. If NR level has been restored to at least one SG, an adequate heat sink exists and the operator transfers to the procedure in effect. If this level does not exist but feed flow is verified to at least one SG (e.g., by core exit thermocouple indications decreasing and/or SG wide range level increasing), then subsequent steps to establish Condensate System flow are not required and the operator transfers to the procedure in effect.

It should be noted that accurate main feed flow indication may not be available at low flow rates and the SG wide range level indication may not be accurate under adverse containment conditions.

EOP Basis:

Same as ERG basis.

Supplemental Information:

ERG Plant-Specific Information: Means for verifying main feed flow.

DW-89-056: Reference leg heatup errors should be included in the determination of the level setpoint for normal containment conditions.

EOP Step No: Step 14 (CONTINUED)

Setpoints and Numerical Values:

Value	Setpoint	Description
9%	M.02	Value showing SG level just in the narrow range including allowances for normal channel accuracy and reference leg process errors.
15%	M.03	Value showing SG level just in the narrow range including allowance for normal channel accuracy, post-accident transmitter errors, and reference leg process errors, not to exceed 50%.

ERG Deviations:

DEV.1 Added checks to determine if SG WR level is rising in any SG and if CET temperatures are dropping.

JUST. These indications show if adequate feed flow exists as described in the ERG basis section for this step.

DEV.2 Added a step "HAS FEED AND BLEED BEEN INITIATED"

JUST. This step was added, based on simulator observations, to prevent operators from returning to procedure in effect with Bleed and Feed still in progress.

EOP Step No: Steps 15, 16, 17, 18, and 19

ERG Step No: Caution 7-1

EOP Step:

(Step 15) HAS SI ACTUATED
[SAFEGUARDS ACTUATION AND RESET ACTIONS]

(Step 16) RESET SI
[SAFEGUARDS ACTUATION AND RESET ACTIONS]

(Step 17) RESET SI
[SAFEGUARDS ACTUATION AND RESET ACTIONS]

(Step 18) IF RCS CONDITIONS DEGRADE AFTER ECCS PUMPS ARE STOPPED, THEN START ECCS PUMPS AS NECESSARY
[SAFEGUARDS ACTUATION AND RESET ACTIONS]

(Step 19) STOP BOTH RHR PUMPS
[SAFEGUARDS ACTUATION AND RESET ACTIONS]

Purpose:

To ensure that SI has been reset so that an inadvertent SI will not occur on SG delta-P.

To alert the operator that while SI actuation signals are blocked, the operator must monitor plant conditions and actuate SI manually if needed.

ERG Basis:

ERG Step 7 blocks the low steam pressure SI signal and the low PZR pressure SI signal in order to depressurize an SG, and establish condensate flow to the SG. Blocking the SI signal prevents feedline and steamline isolation, which, if allowed to occur, could hamper or delay recovery.

Operator attention to plant conditions is necessary to ensure that SI is not required. Manual SI actuation may be required if conditions deteriorate.

EOP Step No: Steps 15, 16, 17, 18, and 19 (CONTINUED)

EOP Basis:

Same as ERG basis, with the following information:

During the upcoming SG depressurization to support feeding the SGs with the Condensate System, an SI actuation will occur on SG delta-P. This SI signal is NOT blockable. If SI has NOT been previously actuated and reset, then an untimely SI actuation on this signal could interfere with the recovery actions in subsequent steps (SI causes MFW isolation). Therefore, SI is actuated and reset to prevent this scenario.

Refer to Logic Drawings 221056 and 221057 for details on this SI signal logic. If any one SG pressure differs from at least two other SG pressures by 100 psi or more, then this signal will be generated. Therefore, even depressurizing two SGs instead of one will still generate an SI since each of these SG pressures will differ from the remaining two SG pressures, which will be sufficient to cause an SI. Refer to verification comment VA-204.

Supplemental Information:

ERG Knowledge Item: The level of plant condition degradation required before manual SI actuation is based on operator judgment after assessing the plant parameters of RCS subcooling and pressurizer level. Using these parameters as indicators for the level of degradation is consistent with the parameter requirements of the SI Reinitiation Criteria used throughout the ERG network.(DW-92-025)

Setpoints and Numerical Values:

None

ERG Deviations:

DEV.1 Added check if SI has actuated and directs manual initiation if it has not already actuated.

JUST. Refer to EOP basis. [SD-60]

DEV.2 Added steps for resetting safeguards equipment and performing SI verification using EOP-APPX-3, "SI VERIFICATION".

JUST. This guidance aids operators in performing these actions in a consistent manner. [SD-12]

DEV.3 Added steps for stopping RHR Pumps, SI Pumps, and all but 21 or 22 Charging Pump.

JUST. The steps were added to shutdown ECCS pumps started as a result of the SI initiation.

EOP Step No: Step 20

ERG Step No: Step 7

EOP Step:

NOTE: 21 AND 23 SG SHOULD BE STEAMED LAST TO MAXIMIZE AVAILABILITY OF A STEAM SUPPLY FOR 23 AFW PUMP
[CONDENSATE SYSTEM ALIGNMENT TO FEED ONE SG]

Purpose:

To direct the operator in establishing condensate flow as an alternative (or supplement) to AFW and main FW flow.

ERG Basis:

The Condensate System is the next source of water readily available to the operator for use in reestablishing the secondary heat sink.

In order to depressurize at least one SG to less than the shutoff head pressure of the Condensate System pumps, the RCS must be depressurized below the pressure to allow blocking of the low steamline pressure SI and low PZR pressure SI signals. If these signals were allowed to actuate, feedline and steamline isolation actuation signals may have to be reset. Feedline isolation may still occur on a reactor trip signal coincident with the low Tavg signal.

Auxiliary spray is used to depressurize the RCS, if letdown is in service, since it provides a maximum cooling to the primary system while allowing no loss of primary water inventory. Normal spray is not available since RCPs are stopped (EOP Step 9). If letdown is not in service, PZR PORVs are used to avoid thermal stresses to the auxiliary spray nozzles. However, if the PZR PORVs cannot be used, auxiliary spray must be used.

Depressurization of the SG(s) is accomplished through the condenser steam dump, PORV, or other means if required. Footnote (O.09) defines the steam generator pressure requirement that will allow the condensate pump to provide adequate feedwater flow for decay heat removal. Minimum condensate flow for condensate pump protection, which is provided by a recirculation line flow control valve, is typically much greater than the flow required to remove decay heat. Reducing SG pressure to the condensate pump discharge header pressure for recirculation would permit the condensate pumps to inject into the SG with adequate feed flow for decay heat removal.

EOP Step No: Step 20 (CONTINUED)

EOP Basis:

Same as ERG basis, with the following additional information:

Due to plant design and EOP differences, the EOP does not depressurize the RCS for the purposes of blocking SI signals associated with the P-11 permissive for the following reasons. First, the steamline differential pressure SI signal cannot be blocked. Second, previous EOP action steps directed the operator to verify that SI has actuated automatically and perform a manual initiation of SI if it has not actuated automatically. Subsequent to these steps, the operator was also directed to reset the SI signal. Performance of these actions will inhibit any automatic actuation until the P-4 signal is cleared. Therefore, blocking any SI signals is unnecessary.

Supplemental Information:

ERG Knowledge Item: At least one SG should be depressurized to a pressure that allows the condensate pump to deliver flow at least equal to that of which is used for decay heat removal. Providing condensate pump flow equal to the minimum flow used for recirculation, satisfies the flow requirement. (DW-89-068)

ERG Knowledge Item: The level of plant condition degradation required before manual SI actuation is based on operator judgment after assessing the plant parameters of RCS subcooling and PZR level. Using these parameters as indicators for the level of degradation is consistent with the parameter requirements of the SI Reinitiation Criteria used throughout the ERG network. (DW-92-025)

ERG Plant-Specific Information: Means to establish condensate flow.

ERG Plant-Specific Information: Means to depressurize SGs.

Setpoints and Numerical Values:

Value	Setpoint	Description
9%	M.02	Value showing S/G level just in the narrow range including allowances for normal channel accuracy and reference leg process errors.
15%	M.03	Value showing S/G level just in the narrow range including allowance for normal channel accuracy, post-accident transmitter errors, and reference leg process errors, not to exceed 50%.
575 psig	O.09	Condensate pump discharge header pressure for minimum flow operation on recirculation, minus allowances for normal channel accuracy.
25%	X.07	Steam dump valve demand for the rapid cooldown of SGTR-1.

EOP Step No: Step 20 (CONTINUED)

ERG Deviations:

DEV.1 Did not include steps associated with depressurizing the RCS to less than 50 psi below the permissive and blocking the low steamline pressure and low PZR pressure SI signals

JUST. Refer to EOP basis. [SD-60]

DEV.2 Did not provide option to depressurize more than one SG.

JUST. Depressurization causes a loss of secondary inventory from the selected SG. At this point, there is no guarantee that condensate flow will be established to the selected SG. Limiting the depressurization to a single SG prevents secondary inventory losses from the non-selected SGs and extends the time before the available secondary heat sink is lost.

EOP Step No: Step 21

ERG Step No: Step 8

EOP Step:

IS AT LEAST ONE SG NR LEVEL GREATER THAN 9% (15% ADVERSE)
[SG LEVEL STATUS]

Purpose:

To determine the success of condensate flow restoration.

ERG Basis:

Following actions to establish condensate flow to the SGs, the operator checks SG NR levels to determine if adequate flow has been established to maintain secondary heat sink. If NR level has been restored to at least one SG, an adequate secondary heat sink exists and the operator is transferred to the procedure in effect. If this level does not exist, but feed flow is verified to at least one SG (e.g., by core exit thermocouple indications decreasing and/or SG wide range level increasing), then subsequent steps to check secondary heat sink effectiveness are not required and the operator transfers to the procedure in effect.

It should be noted that accurate condensate flow indication may not be available at low flow rates and SG wide range level indication may not be accurate under adverse containment conditions.

EOP Basis:

Same as ERG basis.

Supplemental Information:

ERG Plant-Specific Information: Means of verifying Condensate System flow to SGs.

DW-89-056: Reference leg heatup errors should be included in the determination of the level setpoint for normal containment conditions.

EOP Step No: Step 21 (CONTINUED)

Setpoints and Numerical Values:

Value	Setpoint	Description
9%	M.02	Value showing S/G level just in the narrow range including allowances for normal channel accuracy and reference leg process errors.
15%	M.03	Value showing S/G level just in the narrow range including allowance for normal channel accuracy, post-accident transmitter errors, and reference leg process errors, not to exceed 50%.

ERG Deviations:

DEV.1 Deleted explicit guidance for maintaining feed flow to restore SG level.

JUST. The previous continuous action step directed the operator to maintain SG NR level greater than 9% (15% ADVERSE)". Therefore, providing explicit guidance for maintaining feed flow in this step is unnecessary.

DEV.2 Added CET temperatures dropping and SG WR level rising as indications of adequate heat sink.

JUST. As described in the ERG basis section for this step, if SG NR level does not exist, but feed flow is verified to at least one SG (e.g., by core exit thermocouple indications decreasing and/or SG wide range level increasing), then subsequent steps to check secondary heat sink effectiveness are not required.

DEV.3 Added step to maintain selected SG pressure less than 575 psig.

JUST. Once condensate flow is established to the selected SG, the operator must maintain selected SG pressure less than condensate discharge pressure to ensure continued flow. This step also allows the operator to adjust SG pressure as necessary to restore selected SG level to normal.

EOP Step No: Step 22

ERG Step No: Step 9

EOP Step:

ARE WR LEVELS IN AT LEAST THREE SGs LESS THAN 32% (36% ADVERSE)
[SG LEVEL STATUS]

Purpose:

To check if the secondary heat sink conditions require initiation of bleed and feed.

ERG Basis:

The operator should continue attempts to establish flow to the SGs until SG WR levels in at least three intact SGs are less than 32% (36% adverse) or RCS pressure is greater than 2335 psig either of which indicates the need for initiation of bleed and feed. If the operator gets to this step, initial attempts to establish AFW flow, main feedwater flow or condensate flow have been unsuccessful. This step checks SG wide range levels and RCS pressure to determine if the secondary heat sink is still effective. If it is not effective, the operator continues to the next step to establish RCS bleed and feed heat removal. If the secondary heat removal is still effective, the operator returns to EOP Step 3 to continue attempts to restore feed flow to the SGs. If at any time SG WR levels in at least three SGs are less than 32% (36% adverse), bleed and feed should be immediately initiated.

EOP Basis:

Same as ERG basis.

Supplemental Information:

ERG Knowledge Item: Importance of establishing bleed and feed if SG WR levels in at least three intact SGs are less than 32% (36% adverse).

ERG Knowledge Item: The operator must be aware that in addition to SG WR levels in at least three intact SGs being less than 32% (36% adverse), increasing RCS temperature and pressure are an indication of secondary heat sink degradation. SG WR levels in at least three intact SGs being less than 32% (36% adverse) is selected on the basis that it will be met at the same time or before RCS temperature and pressure start increasing. Therefore, if RCS temperature and pressure start increasing without SG WR levels in at least three intact SGs being less than 32% (36% adverse), RCS bleed and feed heat removal should be initiated.

DW-89-056: Reference leg heatup errors should be included in the determination of the level setpoint for normal containment conditions.

EOP Step No: Step 22 (CONTINUED)

Setpoints and Numerical Values:

Value	Setpoint	Description
32%. 2335 PSIG	X.01	Parameter and setpoint for diagnosing loss of secondary heat sink including allowances for normal channel accuracy.
36%. 2335 PSIG	X.02	Parameter and setpoint for diagnosing loss of secondary heat sink including allowances for normal channel accuracy and post-accident transmitter errors.

ERG Deviations:

No deviation from the ERG.

EOP Step No: Step 23

ERG Step No: Caution 10-1, Caution 3-1

EOP Step:

CAUTION TO ESTABLISH RCS HEAT REMOVAL BY RCS BLEED AND FEED, STEPS 24 THRU 29 MUST BE PERFORMED QUICKLY AND WITHOUT INTERRUPTION

STOP ALL RCPs
[BLEED AND FEED INITIATION]

Purpose:

To alert the operator to complete the steps quickly for establishing RCS bleed and feed to ensure effectiveness of the heat removal method.

ERG Basis:

Once the operator detects that secondary heat sink has degraded, RCS bleed and feed must be established within several minutes to prevent or minimize core uncovery.

EOP Basis:

Same as ERG basis.

Supplemental Information:

None

Setpoints and Numerical Values:

None

ERG Deviations:

DEV.1 Added step to stop all RCPs.

JUST. The direction to stop all RCPs was moved to the first step of the Bleed and Feed sequence of steps. This eliminated the potential of the operators forgetting to stop the RCPs when Bleed and Feed criteria were met. Moving this step still meets the requirements of the ERGs to stop the RCPs. See step 5 and 6 basis for stopping the RCPs.

EOP Step No: Step 24

ERG Step No: Step 10

EOP Step:

INITIATE SI
[BLEED AND FEED INITIATION]

Purpose:

To ensure that maximum high pressure ECCS flow is available to provide RCS feed flow for heat removal.

ERG Basis:

Actuating SI ensures that high pressure ECCS flow is available to provide RCS feed flow for heat removal and that the containment is isolated to confine reactor coolant releases resulting from RCS bleed flow through the PORVs.

EOP Basis:

Same as ERG basis, with the following information:

Even though SI may have been previously initiated, it may have been terminated. Since bleed and feed is required at this point, this step does a full SI initiation to ensure maximum ECCS flow with attendant SI injection mode equipment and valve alignments. Refer to verification comment VA-206.

Supplemental Information:

None

Setpoints and Numerical Values:

None

ERG Deviations:

No deviation from the ERG.

EOP Step No: Step 25

ERG Step No: Step 11

EOP Step:

ARE SI VALVES IN SAFEGUARDS POSITION
[RCS FEED PATH VERIFICATION]

Purpose:

To verify that an effective high pressure feed path is established before establishing the RCS bleed path.

ERG Basis:

For the feed path to be effective, the operator should ensure that the valves for operating pumps are properly aligned and at least one centrifugal charging pump or SI pump is running. The operator should manually align valves and start pumps, if necessary, to establish an effective RCS feed path.

Although only one train of SI is required to establish an effective RCS feed path, the operator should attempt to maximize RCS feed flow by operating as many centrifugal charging pumps and SI pumps as possible. This will maximize RCS bleed and feed heat removal effectiveness.

If no centrifugal charging pump and no SI pump is running, the operator should not open PZR PORVs to establish an RCS bleed path since a severe core uncovery will result. For this case, the operator is instructed to continue attempts to establish feed flow by returning to EOP Step 8 since this is the only action that can prevent core uncovery.

If only SI pumps are available and RCS pressure is greater than the shutoff head of the SI pumps, the feed path must be maintained and the bleed path established to allow depressurization of the RCS. The RCS will eventually depressurize to the operating range of the SI pumps, thus, establishing the RCS feed flow.

EOP Step No: Step 25 (CONTINUED)

EOP Basis:

Same as ERG basis, with the following additional information:

SI initiation in the previous step should start all ECCS pumps, including both centrifugal charging pumps and both SI pumps. This is the ERG intent. Note that there is no verification that all centrifugal charging pumps and SI pumps have started. Instead a check is made to verify that at least one centrifugal charging pump and one SI pump is running. If any centrifugal charging pump or SI pump is stopped, no attempt is made at this time to start them because it is also the ERG intent to establish bleed and feed on at least one train as quickly as possible. Attempting to start any idle ECCS pump at this time would be time-consuming due to having to wait out the 74-second SI reset timer, reset the SECs, etc. As long as at least one centrifugal charging pump or SI pump is running, the bleed and feed can proceed. EOP Step 27 will then perform Appendix 3, SI Verification, which will ensure all ECCS pumps are running.

Supplemental Information:

None

Setpoints and Numerical Values:

None

ERG Deviations:

No deviation from the ERG.

EOP Step No: Step 26

ERG Step No: Steps 15 and 16

EOP Step:

OPEN BOTH PZR PORV STOP VALVES
CAN ALTERNATE WATER SOURCE BE ALIGNED TO SGs
[RCS BLEED PATH ALIGNMENT AND VERIFICATION]

Purpose:

To open both PZR PORVs to establish an RCS bleed path.

To verify that an adequate RCS bleed path is established and, if not, to establish alternative bleed path or cooling methods.

ERG Basis:

(ERG Step 15) The operator ensures that the PZR block valves are open and opens both PZR PORVs to establish an RCS bleed path. These valves must be maintained in the open position until secondary heat sink is restored. Once the PZR PORVs are open, the RCS will depressurize and the centrifugal charging pumps and/or SI pumps will deliver subcooled flow to the RCS. This will provide adequate RCS heat removal until flow can be established to the SGs to restore secondary heat sink.

(ERG Step 16) After manually opening the PZR PORVs, the operator should check that both PZR PORVs are maintained in the open position. If both valves are maintained open, sufficient RCS bleed flow exists to permit RCS heat removal.

If both PZR PORVs are not maintained open, the RCS may not depressurize sufficiently to permit adequate feed of subcooled SI flow to remove core decay heat. If core decay heat exceeds RCS bleed and feed heat removal capability, the RCS will repressurize rapidly, further reducing the feed of subcooled SI flow and resulting in a rapid decrease of RCS inventory.

Although only one open PZR PORV may not be sufficient to maintain adequate RCS bleed flow, the operator should maintain one PZR PORV open, if possible, and open all RCS high point vents to provide additional bleed path capability. In addition, the operator should align any available low pressure water source to the SG(s). The operator should then attempt to open a steam generator PORV for at least one intact SG and depressurize that SG to atmospheric pressure to inject the low pressure water source to restore secondary heat removal. If a low pressure water source can not be aligned, a SG should not be depressurized in order to minimize the risk of tube creep rupture that can occur following a severe accident where the SG tubes are subjected to high RCS temperatures and large primary-to-secondary pressure differences. It should be noted that RCS inventory depletion will occur from the open single PZR PORV, the PZR safety valves, and high point vents as the steam generator(s) is being depressurized to atmospheric pressure.

EOP Step No: Step 26 (CONTINUED)

EOP Basis:

Same as ERG basis with the following exception, added step 26.5 which directs the operator to stop SG depressurization when feed water flow is established to SGs. After SG depressurization is initiated, feed water flow may be restored by actions taken in previous steps, such as restoring AFW pumps. Once feed water is restored, SG depressurization is no longer required. If feed water flow is restored as a result of actions taken to align an alternate water source or condensate flow, then SG depressurization should be controlled to maintain desired feed flow.

Supplemental Information:

ERG Knowledge Item: The operator may observe increasing PZR level after the PZR PORVs are opened. Eventually the PZR may become water solid with water relief occurring through the PZR PORVs.

ERG Plant-Specific Information: List of all RCS high point vents.

ERG Plant-Specific Information: Available low pressure water sources (e.g., demin water, fire water or service water) and means to align them to an SG.

Setpoints and Numerical Values:

None

ERG Deviations:

DEV.1 Deleted check if power is available to the PORV block valves.

JUST. The PORV block valves are normally kept open and energized unless the PORV is inoperable AND not capable of being manually cycled. If a PORV block valve is closed and deenergized intentionally for Technical Specifications, the operator would be well aware of this plant condition. Also the control board bezel for the deenergized PORV stop valve would be required to be placed under administrative control. [SD-66]

DEV.2 Added plant-specific details for depressurizing one SG to atmospheric pressure.

JUST. This guidance aids operators in performing these actions in a consistent manner. [SD-12]

EOP Step No: Step 26 (CONTINUED)

DEV.3 Added step to stop depressurization when feed water flow is established to SG.

JUST. After SG depressurization is initiated, feed water flow may be restored by actions taken in previous steps, such as restoring AFW pumps. Once feed water is restored, SG depressurization is no longer required. If SG depressurization were allowed to continue after feed water restoration, it would complicate or prolong subsequent recovery actions to restore SG level and terminate Bleed and Feed.

EOP Step No: Step 27

ERG Step No: Step 17

EOP Step:

VERIFY SI VALVE ALIGNMENT
[SAFEGUARDS RESET ACTIONS]

Purpose:

To verify proper actuation of all SI actuated equipment.

ERG Basis:

It is possible to make a transition to this procedure without having performed the verification of automatic SI actions in EOP-TRIP-1. This step specifically instructs the operator to perform that verification.

EOP Basis:

Same as ERG basis, with the following additional information:

This step directs the performance of EOP-APPX-3, "SI VERIFICATION".

Supplemental Information:

ERG Knowledge Item: This step should be initiated and performed in parallel with the subsequent steps of this procedure as manpower and time permit.

Setpoints and Numerical Values:

None

ERG Deviations:

DEV.1 Modified the ERG step to perform EOP-APPX-3 rather than the verification of automatic SI actions in EOP-TRIP-1.

JUST. To aid operators in performing these actions in a consistent manner an EOP Appendix is used for SI verification. EOP-APPX-3, "SI VERIFICATION" verifies proper actuation and valve alignments of the ECCS system.

EOP Step No: Steps 28 and 29

ERG Step No: Steps 12, 13, and 14

EOP Step:

(Step 28) HAVE SAFEGUARDS BEEN RESET
[SAFEGUARDS RESET ACTIONS]

(Step 29) RESET SI
[SAFEGUARDS RESET ACTIONS]

Purpose:

To utilize the reset function which is part of the safeguards actuation logic such that equipment can be realigned.

To remove the "locked-in" signal, causing all Phase A and Phase B containment valves to be closed, such that equipment can be realigned.

To restore a sustained compressed air supply to allow control of air-operated equipment inside containment (e.g., charging and letdown valves, PZR PORVs, etc.)

ERG Basis:

(ERG Step 12) In order to realign safeguards equipment and to provide sustained instrument air for PZR PORVs, a deliberate action must be taken to reset the SI signal.

For the reference plant, instrument air is needed to maintain the PZR PORVs reset as part of reestablishing instrument air to containment.

(ERG Step 13) This part of the automatic logic requires a deliberate operator action to remove the "close" signal. No valve will reposition upon actuation of the resets, but subsequent control actions will open the valves. These valves should remain closed, unless necessary process streams are being established.

For the reference plant, instrument air is needed to maintain the PZR PORVs in an open position for an extended period of time. The Phase A isolation signal needs to be reset as part of reestablishing instrument air to containment.

(ERG Step 14) The Instrument (Control) Air System on the reference plant utilizes a large volume receiver to sustain pressure in the system. A separate receiver inside containment allows limited equipment operation; however, the line to the compressors is isolated with Phase A isolation. While opening the containment valves provides a flow path, a compressor may have to be started also (with attendant electrical considerations) to supply pressure.

EOP Step No: Steps 28 and 29 (CONTINUED)

ERG Basis: (CONTINUED)

For the reference plant, instrument air is needed to maintain the PZR PORVs in an open position for an extended period of time.

EOP Basis:

Same as ERG basis.

Supplemental Information:

None

Setpoints and Numerical Values:

None

ERG Deviations:

DEV.1 The EOP added an action step to check if safeguards have been reset.

JUST. Due to the strategy employed in EOP-FRHS-1, the operator may have previously reset safeguards equipment (Refer to EOP Steps 16 and 17). The additional action step was added to allow the operator to bypass the flowchart steps which provide direction for the resetting of safeguards.

DEV.2 Added plant specific details for resetting of SI signal (SECs).

JUST. The SECs must be reset along with (but following) SI to allow manual control of safeguards equipment. The necessary steps have been added, along with possible contingency actions. [SD-13]

DEV.3 Added plant specific details to reset the 230V control centers.

JUST. Some 230V loads are initially locked out in SEC Modes II, III, and IV to reduce initial DG loading. These loads include charging/RHR/CS pump room coolers, RHR sump pumps, BAT heaters, 21 and 22 Charging Pump Auxiliary Lube Pumps, and DG auxiliary loads such as air-start air compressors, jacket water heaters, fuel oil transfer pumps, etc. At 20 minutes after SEC actuation, this lockout is automatically removed, allowing these loads to be automatically energized. This lockout is reset manually as a backup to the automatic reset. [SD-16]

EOP Step No: Step 30

ERG Step No: Step 18

EOP Step:

MAINTAIN ECCS FLOW
[RCS HEAT REMOVAL]

Purpose:

To reinforce to the operator that the RCS bleed and feed paths should be maintained.

ERG Basis:

Until a secondary heat sink can be reestablished and verified, the RCS bleed and feed heat removal must be maintained to minimize core uncovery and prevent inadequate core cooling.

EOP Basis:

Same as ERG basis.

Supplemental Information:

None

Setpoints and Numerical Values:

None

ERG Deviations:

No deviation from the ERG.

EOP Step No: Step 31

ERG Step No: Caution 19-1

EOP Step:

IF "RWST LEVEL LO" ALARM ACTUATES (15.2 FT),
THEN GO TO EOP-LOCA-3, STEP 1

Purpose:

To alert the operator that RWST water inventory may be depleted due to SI flow and that transfer to cold leg recirculation may be required.

ERG Basis:

Since RCS bleed and feed heat removal depletes the RWST water inventory, the switchover level in the RWST may be reached. In this case, the operator should immediately go to EOP-LOCA-3, "TRANSFER TO COLD LEG RECIRCULATION", to maintain RCS feed flow. When RWST level decreases to 15.2 ft, there should be sufficient water available in the recirculation sump to switch the suction supply to the SI pumps. The remainder of RWST water is reserved for spray pump usage.

EOP Basis:

Same as ERG basis.

Supplemental Information:

None

Setpoints and Numerical Values:

Value	Setpoint	Description
15.2 ft	U.02	RWST level switchover setpoint.

ERG Deviations:

DEV.1 Deleted the ERG Caution on transferring to cold leg recirculation on low RWST level.

JUST. Since the EOP Writer's Guide does not allow hidden actions in cautions and notes, the ERG caution was converted into a continuous action step. [SD-20]

EOP Step No: Step 32

ERG Step No: Caution 19-2

EOP Step:

HAS CONTAINMENT PRESSURE REMAINED LESS THAN 15 PSIG
[CONTAINMENT SPRAY ACTUATION VERIFICATION]

Purpose:

To alert the operator that containment spray should be verified if containment pressure exceeds the spray actuation setpoint.

ERG Basis:

For some plants the feed and bleed steps in this procedure can lead to a containment pressure that exceeds the containment spray actuation setpoint. If containment pressure does reach to spray actuation setpoint, the operator should verify that containment spray is actuated.

EOP Basis:

Same as ERG basis.

Supplemental Information:

None

Setpoints and Numerical Values:

Value	Setpoint	Description
15 psig	T.02	Containment pressure setpoint for spray actuation.

ERG Deviations:

DEV.1 Deleted the ERG Caution on verifying containment spray flow.

JUST. Since the EOP Writer's Guide does not allow hidden actions in cautions and notes, the ERG Caution was converted into an action step. [SD-20]

EOP Step No: Step 33

ERG Step No: Caution 19-3

EOP Step:

CAUTION RHR PUMPS SHOULD NOT BE RUN LONGER THAN 60 MINUTES WITHOUT CCW TO THE RHR HXs

Purpose:

To prevent damage to the RHR pumps.

ERG Basis:

For the reference plant, the RHR pumps utilize seal coolers and the RHR heat exchangers to remove pump heat. The seal coolers and RHR heat exchangers are, in turn, cooled by CCW. If the RCS pressure is above the shutoff head of the RHR pumps and these pumps are run in the injection mode for an extended period of time without CCW to the seal coolers and the RHR heat exchangers, they may be damaged due to excessive heatup. There are two basic failure mechanisms for the RHR pumps when CCW to the RHR heat exchangers is lost. The failure mechanisms depend on the pump manufacturer and the NPSH requirements of the pump. With no cooling provided to the RHR heat exchangers, the temperature of the pumped fluid will gradually increase. As a result, the NPSH requirements may not be satisfied and cavitation of the pumps may occur, causing excessive vibration, possible pump seizure, bearing damage, gasket and seal leakage, and motor failure.

If NPSH requirements are not maintained, overheating of the pumps may occur. The initial effects of pump overheating may be leakage through the mechanical seals which may show accelerated wear if the pumped fluid exceeds the design temperature of the seals. Due to the tight tolerances between the impeller and wear rings, thermal expansion may cause the impeller to seize on the stationary parts, possibly resulting in significant pump or motor failure. Also, pre-loaded flexitalic gaskets, that are used by most pump manufacturers, may show leakage at their joints when exposed to excessive thermal expansion.

In conclusion, the two main failure mechanisms are pump overheating and cavitation. Either or both of these mechanisms may lead to pump and motor failure, depending on the factors described above.

EOP Basis:

Same as ERG basis.

Supplemental Information:

None

EOP Step No: Step 33 (CONTINUED)

Setpoints and Numerical Values:

Value	Setpoint	Description
60 minutes	V.03	Time for which RHR pumps can run dead headed without CCW to the RHR heat exchanges.

ERG Deviations:

No deviation from the ERG.

EOP Step No: Step 34

ERG Step No: Step 19

EOP Step:

IS ANY CS PUMP RUNNING
[CS PUMP STOP CRITERIA]

Purpose:

To stop containment spray pumps if running and no longer needed

ERG Basis:

The containment spray pumps are automatically actuated on HI-3 containment pressure. In EOP-TRIP-1, REACTOR TRIP OR SAFETY INJECTION, Step 11, the operator verifies that the Containment Spray System is operating if it is required.

EOP-FRHS-1, Step 23 through Step 26 function to establish RCS bleed and feed, releasing RCS inventory to containment and potentially increasing containment pressure to the HI-3 setpoint. If the HI-3 setpoint is reached, the containment spray system would be automatically initiated, the rate of RWST inventory depletion would increase significantly and the time to switchover to recirculation would decrease. Since it is desirable to conserve RWST inventory (for use by the charging/SI or high-head SI pumps in RCS bleed and feed operation) and thus delay the switchover to recirculation, the containment spray pumps can be stopped after containment pressure is reduced by containment spray. If containment spray is automatically actuated due to RCS bleed and feed operation, EOP-FRHS-1, Step 34 checks if the containment spray pumps should be stopped after containment pressure is reduced to the required value.

If at any time the containment pressure subsequently increases above the HI-3 containment pressure setpoint while the operator is in EOP-FRHS-1, the second caution before Step 32 instructs the operator to verify containment spray if containment pressure increases above the setpoint for automatic spray actuation. If at any time the containment pressure subsequently increases above the HI-3 containment pressure setpoint after the operator is transitioned out of EOP-FRHS-1, the PURPLE path of the Containment Status Tree sends the operator to EOP-FRCE-1, RESPONSE TO HIGH CONTAINMENT PRESSURE. Step 3 of EOP-FRCE-1 checks the need for containment spray and verifies that the spray system is operational if it is required.

EOP Basis:

Same as ERG basis.

EOP Step No: Step 34 (CONTINUED)

Supplemental Information:

ERG Knowledge Item: This step is a continuous action step.

ERG Knowledge Item: As part of the action to terminate containment spray, the operator should close the motor operated valve on the containment spray pump discharge line when stopping the containment spray pump. This action will ensure containment isolation. (DW-94-004)

Setpoints and Numerical Values:

Value	Setpoint	Description
13 psig	T.04	Pressure for resetting spray signal minus allowances for normal channel accuracy.

ERG Deviations:

No deviation from the ERG.

EOP Step No: Steps 35 and 36

ERG Step No: Step 20

EOP Step:

(Step 35) SELECT AT LEAST ONE SG AND CONTINUE ATTEMPTS TO ESTABLISH A HEAT SINK
[SECONDARY HEAT SINK RESTORATION]

(Step 36) HAS FEED FLOW OR CAPABILITY BEEN RESTORED
[SECONDARY HEAT SINK RESTORATION]

Purpose:

To reinforce to the operator that efforts to establish a secondary heat sink should be continued.

ERG Basis:

Re-establishment of the secondary heat sink will permit termination of the bleed and feed heat removal method and establish stabilized plant conditions.

Attempts to establish secondary heat sink in at least one SG may have been initiated in previous steps before initiation of bleed and feed heat removal. These attempts should be continued using the actions specified in EOP Steps 8, 11, 20 and 26.2 until a secondary heat sink is restored.

Once feed capability is restored the operator will check CETs. If CETs are rising the selected SG will be fed at the maximum rate due to the urgency of the situation. If CETs are not rising, feed flow should be limited to a rate between 1E04 and 5E04 lbm/hr until wide range level is established. Once an indicated Wide Range level is achieved in the selected SG, feedwater can be adjusted as necessary to restore level into the Narrow Range and thereby satisfying the requirements for a secondary heat sink.

Subsequent to securing SI and exiting EOP-FRHS-1, the remaining dry SGs may have their levels recovered at the direction of the plant engineering staff (TSC) in a manner that will minimize thermal shock to the SGs. This evaluation should consider steam generator materials and properties, tech spec considerations, etc. See DW-95-040 for additional information.

EOP Basis:

Same as ERG basis.

EOP Step No: Steps 35 and 36 (CONTINUED)

Supplemental Information:

ERG Plant-Specific Information: Means to establish other low pressure flow to SGs.

DW-89-056: Reference leg heatup errors should be included in the determination of the level setpoint for normal containment conditions.

DW-95-040: Modified steps for feeding a Hot Dry SG. If bleed and feed has been initiated it may not be possible to accurately read SG temperatures to determine if a SG was Hot (i.e. greater than 550 degrees F.).

Setpoints and Numerical Values:

Value	Setpoint	Description
9%	M.02	Value showing S/G level just in the narrow range including allowances for normal channel accuracy and reference leg process errors.
15%	M.03	Value showing S/G level just in the narrow range including allowance for normal channel accuracy, post-accident transmitter errors, and reference leg process errors, not to exceed 50%.
33%	M.09	Normal SG narrow range level representing the upper control band limit.
11%	N.01	Value showing SG level just in the wide range including allowances for normal channel accuracy and reference leg process errors.
15%	N.02	Value showing SG level just in the wide range including allowance for normal channel accuracy, post-accident transmitter errors, and reference leg process errors.
$1x10^4$ lb/hr	S.05	Value of feed flow in plant specific units corresponding to 25 gpm.
$5x10^4$ lb/hr	S.11	Maximum AFW flow to a dry steam generator per FRHS-5, RESPONSE TO SG LOW LEVEL.

ERG Deviations:

DEV.1 Added a step to check if feed capability has been restored.

JUST. The intent of the ERG step is to establish a secondary heat sink. The first step in establishing a heat sink is restoring feed flow to a SG. The second step is feeding the SG at a rate to restore SG level. An adequate heat sink can be demonstrated by CETs decreasing.

EOP Step No: Steps 35 and 36 (CONTINUED)

ERG Deviations: (CONTINUED)

DEV 2 Added step to select ONLY ONE SG for depressurization and deleted steps to feed a HOT DRY SG.

JUST DW-95-040 modified feeding requirements for HOT DRY SGs and determined that plant engineering staff should be consulted to provide recommendations to recover Dry SG levels.

EOP Step No: Step 37

ERG Step No: Step 21

EOP Step:

IS ANY SG NR LEVEL GREATER THAN 9% (15% ADVERSE)
[SG HEAT SINK STATUS]

Purpose:

To check if adequate SG level is established to ensure a maintainable heat sink.

ERG Basis:

An adequate secondary heat sink as indicated by NR level in at least one SG is required to ensure that RCS heat removal can be maintained following RCS bleed and feed termination. Premature termination will result in increasing RCS temperatures and operator action to reopen the PZR PORVs and reestablish RCS bleed and feed. An adequate secondary heat sink minimizes the potential for cycling of the PZR PORVs.

If NR level in at least one SG is greater than 9% [15% for adverse containment], then subsequent steps to terminate RCS bleed and feed heat removal can be performed. If SG levels are below the NR, the operator is directed to return to EOP Step 35 and continue attempts to establish secondary heat sink in at least one SG, while maintaining RCS bleed and feed heat removal.

If RCS bleed and feed is initiated early in the transient and flow stagnates in the cold leg, cold leg temperatures may decrease to less than T1. (Refer to ERG background document F-0.4.) In this case, the operator would address the RED or PURPLE terminus in EOP-CFST-1 after he exits EOP-FRHS-1.

EOP Basis:

Same as ERG basis.

Supplemental Information:

DW-89-056: Reference leg heatup errors should be included in the determination of the level setpoint for normal containment conditions.

EOP Step No: Step 37 (CONTINUED)

Setpoints and Numerical Values:

Value	Setpoint	Description
9%	M.02	Value showing S/G level just in the narrow range including allowances for normal channel accuracy and reference leg process errors.
15%	M.03	Value showing S/G level just in the narrow range including allowance for normal channel accuracy, post-accident transmitter errors, and reference leg process errors, not to exceed 50%.

ERG Deviations:

No deviation from the ERG.

EOP Step No: Step 38

ERG Step No: Step 22

EOP Step:

ARE CETs DROPPING
[RCS TEMPERATURE STATUS]

Purpose:

To determine if the established SG level results in increased cooling for the core and RCS.

ERG Basis:

The operator should monitor RCS hot leg temperatures and core exit thermocouple temperatures for an additional indication that feed flow has been established to the SGs. Decreasing temperatures indicate that feed flow is reaching the SGs and starting to remove core decay heat. Therefore, subsequent steps to terminate RCS bleed and feed heat removal can be performed.

If RCS hot leg temperatures and CETs are not decreasing, the operator is directed to return to EOP Step 35 and continue attempts to establish secondary heat sink in at least one SG, while maintaining RCS bleed and feed heat removal.

EOP Basis:

Same as ERG basis.

Supplemental Information:

None

Setpoints and Numerical Values:

None

ERG Deviations:

No deviation from the ERG.

EOP Step No: Step 39

ERG Step No: Step 23

EOP Step:

CLOSE 2RC40 THRU 2RC43 (REACTOR HEAD VENTS)
[SI TERMINATION STATUS]

Purpose:

To ensure that the reactor head vent valves are closed.

ERG Basis:

In previous steps to establish an adequate RCS bleed path, the PZR PORVs were opened to permit RCS heat removal. If at least two PZR PORVs could not be maintained open, it may have been necessary to open the reactor vessel head vent valves to allow the RCS to depressurize sufficiently to permit adequate feed of subcooled SI flow to remove core decay heat. Once an adequate secondary heat sink is established, this step ensures that the reactor vessel head vent valves are closed prior to performing the controlled sequence of SI reduction.

EOP Basis:

Same as ERG basis.

Supplemental Information:

None

Setpoints and Numerical Values:

None

ERG Deviations:

No deviation from the ERG.

EOP Step No: Step 40

ERG Step No: Note 24-1 and Step 24

EOP Step:

(Note 24-1) AFTER CLOSING A PZR PORV IT MAY BE NECESSARY TO WAIT SEVERAL MINUTES FOR RCS PRESSURE TO RISE TO CHECK IF SI CAN BE TERMINATED

(Step 24) IS RCS SUBCOOLING GREATER THAN 50 F
(Step 24) IS RVLIS FULL RANGE GREATER THAN 57%
[SI TERMINATION STATUS]

Purpose:

To remind the operator that RCS pressure should be stabilized before checking the SI termination criteria

To determine if conditions have been established which indicate that full SI flow is no longer required

ERG Basis:

If the subcooling criterion for terminating SI is not met, the operator will take actions to increase the RCS subcooling margin (e.g., closing a PZR PORV). After a PZR PORV is closed, it may take some time for the subcooling margin to increase, and the operator should allow time for RCS pressure to increase before proceeding.

Following SI actuation, RCS conditions may be restored to within acceptable limits for SI termination to be allowed. The combination of a minimum subcooling indication of 50°F plus errors and sufficient liquid level in the vessel to cover the core represents less restrictive SI termination criteria in this guideline than those present in the ORGs since, with the PORVs open, the pressurizer will not be a reliable indication of RCS inventory.

The subcooling criterion ensures adequate subcooled conditions and the RVLIS indication ensures the existence of an adequate vessel inventory such that core cooling is maintained. Refer to the document SI TERMINATION/REINITIATION in the Generic Issues section of the Executive Volume. If either of the termination criteria are not satisfied, then SI is required to ensure core cooling and should not be terminated.

EOP Basis:

Same as ERG basis.

EOP Step No: Step 40 (CONTINUED)

Supplemental Information:

Due to the less restrictive SI termination and reinitiation criteria provided in this guideline the operator should be especially alert for any decrease in RCS subcooling or vessel level that warrants SI reinitiation.

Setpoints and Numerical Values:

Value	Setpoint	Description
50°F	R.12	The sum of temperature and pressure measurement system errors including allowances for normal channel accuracies, transulated into temperature using saturation tables, plus 50°F.
57%	K.02	RVLIS full range value which is top of core including allowances for normal channel accuracy

ERG Deviations:

DEV.1 Added several minutes to ERG note 24-1.

JUST. By the time the operator establishes sufficient SG level inventory to terminate SI, a void may exist in the reactor head region. Once the PORVs are closed it may take several minutes, with SI flow established, to collapse the void and restore sub cooling. Providing additional guidance, to allow sufficient time to collapse the void, prevents the operator from unnecessarily transitioning to EOP-LOCA-1.

EOP Step No: Step 40

ERG Step No: Step 26

EOP Step:

STOP ALL BUT 21 OR 22 CHARGING PUMP
STOP BOTH SI PUMPS
[SI TERMINATION STATUS]

Purpose:

To reduce flow into the RCS from the SI pumps and charging pumps

ERG Basis:

Satisfaction of conditions for SI termination implies that control can be maintained by the operator without all of the ECCS pumps running. In this step, all SI pumps and all but one charging pump are stopped and placed in standby for future use.

EOP Basis:

Same as ERG basis.

Supplemental Information:

None

Setpoints and Numerical Values:

None

ERG Deviations:

No deviation from the ERG.

EOP Step No: Step 41, 42

ERG Step No: Step 25 and 27

EOP Step:

IS ANY PZR PORV AND ASSOCIATED PORV STOP VALVE OPEN
[RCS BLEED PATH STATUS]

Purpose:

(Step 41) To close PZR PORVs in conjunction with SI pump termination
(Step 42) To close all but one PZR PORV to compensate for the lower RCS injection flow

ERG Basis:

(ERG step 25) One of the reasons that the SI termination criteria may not have been met in the previous step is that the PZR PORVs are open. Therefore, the operator will be directed to close one PZR PORV, which will result in a repressurization that will increase RCS subcooling. Subsequent performance of this step will continue to close PZR PORVs until the SI termination criteria are satisfied.

If all PZR PORVs or associated block valves are closed and the SI termination criteria are not met, then a LOCA exists in the primary system and the operator will transition to EOP-LOCA-1 to recover from this condition. Also, if a PZR PORV is stuck open or remains open after closing, then its associated block valve is closed. If any PZR PORV or its block valve cannot be closed, the operator is transitioned to EOP-LOCA-1 to recover from this condition.

(ERG step 27) Once the SI pumps and all but one charging pump are stopped, the operator will close all but one PZR PORV to compensate for the lower RCS injection flow. One PZR PORV is left open to prevent full repressurization due to injection from the charging pump. If any PZR PORV or its block valve cannot be closed, the operator is transitioned to EOP-LOCA-1 to recover from this condition.

EOP Basis:

Same as ERG basis.

Supplemental Information:

None

Setpoints and Numerical Values:

None

EOP Step No: Step 41, 42 (CONTINUED)

ERG Deviations:

No deviation from the ERG.

EOP Step No: Step 43

ERG Step No: Step 28 and 29

EOP Step:

IS CHARGING PUMP SUCTION ALIGNED TO THE RWST
[BIT ISOLATION AND NORMAL CHARGING ALIGNMENT]

Purpose:

To stop injection flow to the RCS through the BIT
To properly establish a charging path and charging flow

ERG Basis:

(ERG step 28) Normal charging and the BIT injection lines are parallel flow paths from the discharge of the charging pumps. BIT isolation enables the normal charging path to be used. Closing the inlet valves first prevents any pressure surge in the BIT.

Prior to opening the charging pump miniflow isolation valves, the operator checks to determine if the charging pumps are aligned to the RWST in the injection mode or to the discharge of the RHR pumps in the recirculation mode. If the charging pumps are aligned to the RWST, the miniflow isolation valves should be opened. If the charging pumps are aligned to the discharge of the RHR pumps in the recirculation mode, the miniflow valves should not be opened since this will, for certain conditions, establish a flow path from the containment sump through the RHR pumps via the CVCS relief valves to the CVCS holdup tanks. For the recirculation mode, the operator opens the charging flow control valve to establish a minimum charging flow prior to isolating the BIT.

Prior to isolating the BIT, the operator checks that the charging pump miniflow valves are open in order to ensure that the charging pump minimum flow is available. Then, all PZR PORVs are closed to isolate RCS leakage. Waiting until just before the BIT is isolated to close the PZR PORV minimizes any repressurization due to the charging pump injecting into a solid RCS. If any PZR PORV or its block valve cannot be closed, the operator is transitioned to EOP-LOCA-1 to recover from this condition.

(ERG step 29) Proper alignment of the charging path allows flow to be controlled in the normal manner. For the reference plant, normal miniflow for the charging pump does not isolate on an SI signal and miniflow will be available since miniflow was verified in the previous step before the BIT was isolated. Charging flow is established by closing the charging line hand control valve, opening the charging line isolation valves and then establishing the desired charging flow by adjusting the charging flow control valve and the charging line hand control valve.

For those plants that have miniflow isolated on an SI signal, miniflow should be reestablished before isolating the BIT.

EOP Step No: Step 43 (CONTINUED)

ERG Basis: (CONTINUED)

The substeps in this step are an example of how to establish charging and may be modified, as long as a minimum seal injection flow is maintained and charging is introduced cautiously through the charging line.

EOP Basis:

Same as ERG basis.

Supplemental Information:

None

Setpoints and Numerical Values:

Value	Setpoint	Description
60 gpm	S.01	Charging flow rate comparable to normal charging/SI pump mini flow when in recirculation mode
25%	D.06	Value showing pressurizer level just covering the heaters, including allowances for normal channel accuracy and reference leg errors
33%	D.07	Value showing pressurizer level just covering the heaters, including allowances for normal channel accuracy, post-accident transmitter errors, and reference leg process errors, not to exceed 50%

ERG Deviations:

DEV.1 Added a step to control PZR level greater than 25% (33% adverse)

JUST. The intent of the ERG step is to establish and control PZR level. Adding the setpoints clarifies the intent of the ERG.

EOP Step No: Step 44

ERG Step No: Step 30

EOP Step:

IS RCS T-HOT STABLE OR LOWERING
[RCS T-HOT STATUS]

Purpose:

To prevent heatup as SI flow reduction occurs

ERG Basis:

As soon as significant SI flow reduction occurs, the RCS will start to heat up. With a solid system, this heatup will cause a significant pressure rise. To prevent a pressure rise due to heatup, RCS temperatures are stabilized by controlling feed flow and dumping steam. Also, stabilizing RCS temperature makes it easier to establish and control PZR level and pressure while realigning the plant to a nominal condition and the next course of action is being decided.

EOP Basis:

Same as ERG basis.

Supplemental Information:

Refer to DW-95-040 for additional information on feeding dry SG.

Setpoints and Numerical Values:

None

ERG Deviations:

No deviation from the ERG.

EOP Step No: Step 45

ERG Step No: Step 31

EOP Step:

IS RCS PRESSURE GREATER THAN 300 PSIG (420 PSIG ADVERSE)
[RHR PUMP STATUS]

Purpose:

To stop the RHR pumps if RCS pressure is sufficiently high to prevent any injection flow.

ERG Basis:

RHR pumps can only deliver flow against fairly low RCS pressures. At higher pressures, they inject no water and are pumping water around a small closed loop. The pumps are stopped to prevent potential damage due to heat up.

EOP Basis:

Same as ERG basis.

Supplemental Information:

None

Setpoints and Numerical Values:

Value	Setpoint	Description
300 psig	B.07	Shutoff head pressure of the RHR pumps plus allowances for normal channel accuracy.
420 psig	B.08	Shutoff head pressure of the RHR pumps plus allowance for normal channel accuracy and post accident transmitter errors.

ERG Deviations:

DEV.1 Added an action step that directs the operator to start both RHR pumps prior to making the transition to EOP-LOCA-1.

JUST. The action step was added since RCS pressure has decreased to less than the shutoff head pressure of the RHR pumps. A previous step in EOP-FRHS-1 may have stopped the RHR pumps. This action is a continuous action step in EOP-LOCA-1.

EOP Step No: Step 46

ERG Step No: Steps 32 and 33

EOP Step:

CONTROL CHARGING FLOW TO MAINTAIN PZR LEVEL
[CHG PUMP STATUS]

Purpose:

To establish maintenance of PZR level as the criteria for adjusting charging flow.

To direct the transition to the appropriate procedure for subsequent recovery actions.

ERG Basis:

(ERG Step 32) Since some PZR level was established prior to aligning normal charging, it should be maintained at its current level. Charging flow should be adjusted as necessary.

(ERG Step 33) EOP-TRIP-3 contains the appropriate actions to complete recovery and, therefore, the operator is instructed to transfer to this procedure.

EOP Basis:

Same as ERG basis.

Supplemental Information:

ERG Knowledge Item: If the PZR is solid, charging flow will also control RCS pressure. In that case, flow should be controlled as necessary to maintain RCS subcooling greater than instrument uncertainties.

Setpoints and Numerical Values:

None

ERG Deviations:

No deviation from the ERG.

APPENDIX A

EOP/ERG CORRELATION

2-EOP-FRHS-1: RESPONSE TO LOSS OF SECONDARY HEAT SINK

EOP/ERG CORRELATION

EOP Step	ERG Step
ENTRY CONDITIONS	ENTRY CONDITIONS
1	Caution 1-1 (1)
2	Caution 1-2 (1)
3	1 (1)
4	2 (2)
5,6	Caution 3-1 (3)
7	Caution 3-2 (3)
8	3 (3)
9	4 (4)
10	Caution 5-1 (5)
11, 12, 13	5 (5)
14	6 (6)
15, 16, 17, 18, 19	Caution 7-1 (7)
20	7 (7)
21	8 (8)
22	9 (9)
23	Caution 10-1 (10)
24	10 (10)
25	11 (11)
26	15 (15) 16 (16)
27	17 (17)
28, 29	12 (12) 13 (13) 14 (14)
30	18 (17)
31	Caution 19-1 (18)
32	Caution 19-2 (18)
33	Caution 19-3 (18)
34	19 (18)
35, 36	20 (19)

EOP Step	ERG Step
37	21 (20)
38	22 (21)
39	23 (22)
40	24, 26 (23, 25) Note 24-1 (23)
41, 42	25, 27 (24, 26)
43	28, 29 (27A, 27B)
44	30 (28)
45	31 (29)
46	32, 33 (30, 31)

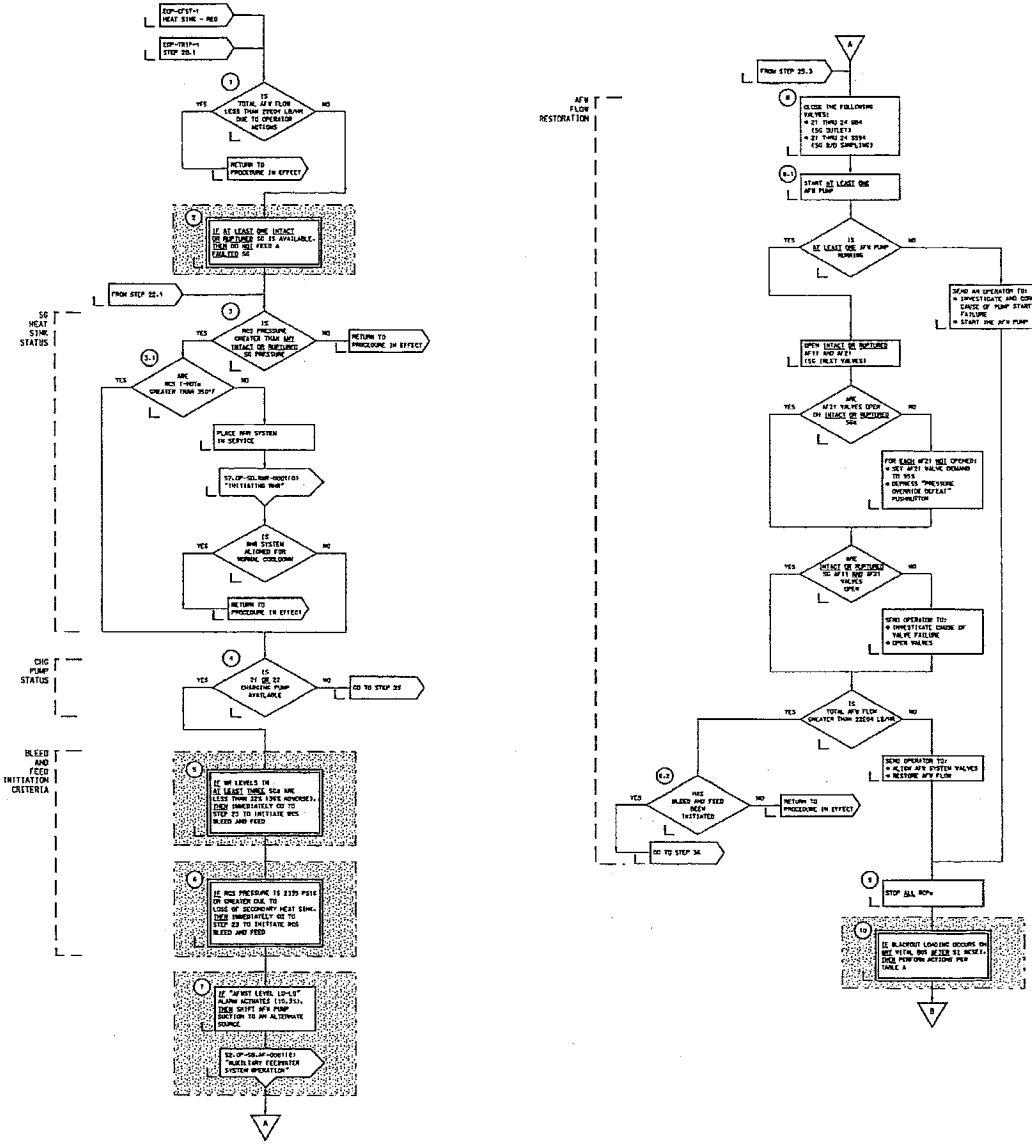

TABLE A

1. VERIFY LOADING COMPLETE
2. MONIT AFFECTED SEC
3. START SAFEGUARDS LOADS AS NECESSARY

SAFEGUARDS LOADS		
2A VITAL BUS	2B VITAL BUS	2C VITAL BUS
5A DC BUS 2HV/480V BUS 21 S1 PUMP 21 RHR PUMP 21 OR 22 SW PUMP 21 CFCU-LOW 21 AFW PUMP 21 AUX BLDG EXHAUST FAN 21 CHILLER 21 CS PUMP * 21 SWGR ROOM SUPPLY FAN * 21 SWGR ROOM EXHAUST FAN	2B DC BUS 2HV/480V BUS 21 CHARGING PUMP 22 RHR PUMP 24 OR 23 SW PUMP 22 CFCU-LOW 24 CFCU-LOW 22 AFW PUMP 22 AUX BLDG SUPPLY FAN 22 AUX BLDG EXHAUST FAN 22 CHILLER * 22 SWGR ROOM SUPPLY FAN * 22 SWGR ROOM EXHAUST FAN	2C DC BUS 2HV/480V BUS 22 CHARGING PUMP 22 S1 PUMP 23 OR 24 SW PUMP 23 CFCU-LOW 25 CFCU-LOW 2 EMERGENCY AIR COMPRESSOR 21 AUX BLDG SUPPLY FAN 23 AUX BLDG EXHAUST FAN 23 CHILLER 22 CS PUMP * 23 SWGR ROOM SUPPLY FAN

* ANY COMBINATION OF TWO SWGR ROOM SUPPLY FANS AND ONE SWGR ROOM EXHAUST FAN

2-EOP-FRHS-1

RESPONSE TO LOSS OF SECONDARY HEAT SINK

SHEET 1 OF 6

REV 24 REV DATE 18 DEC 98

SALEM GENERATING STATION UNIT 2

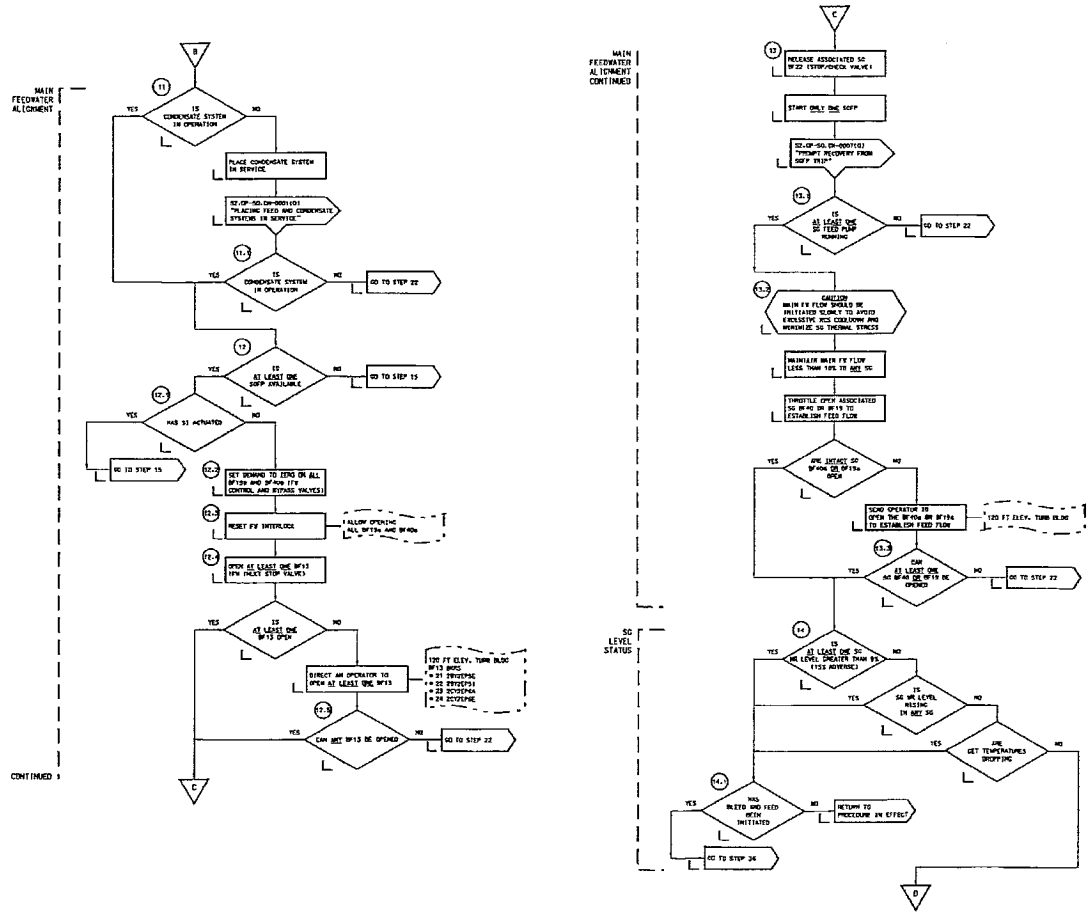

2-EOP-FRHS-1	
RESPONSE TO LOSS OF SECONDARY HEAT SINK	
SHEET 2 OF 6	
REV 24	REV DATE 18 DEC 98
SALEM GENERATING STATION	UNIT 2

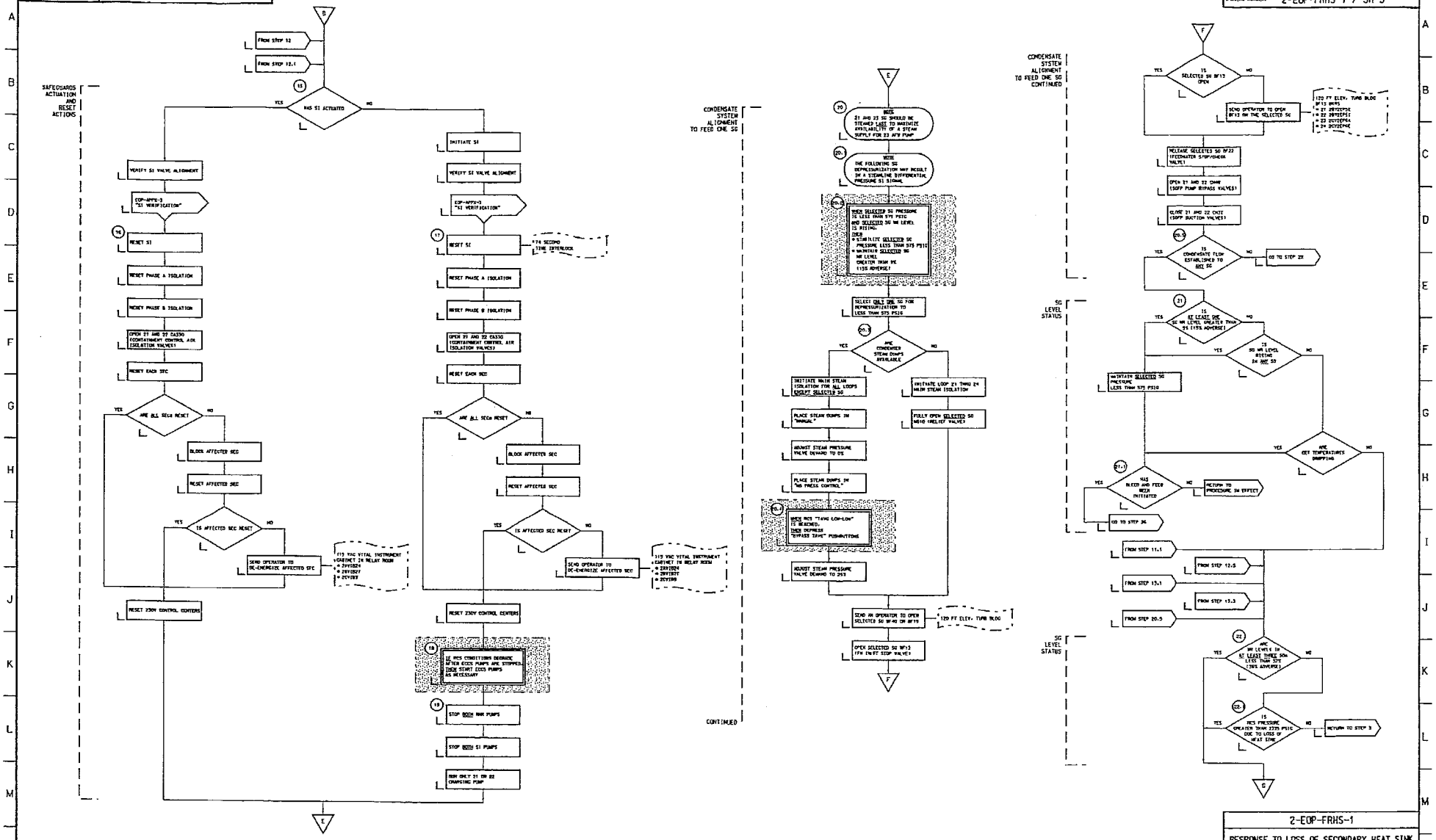

2-EOP-FRHS-1	
RESPONSE TO LOSS OF SECONDARY HEAT SINK	
SHEET 3 OF 6	
REV 24	REV DATE 18 DEC 98
SALEM GENERATING STATION	UNIT 2

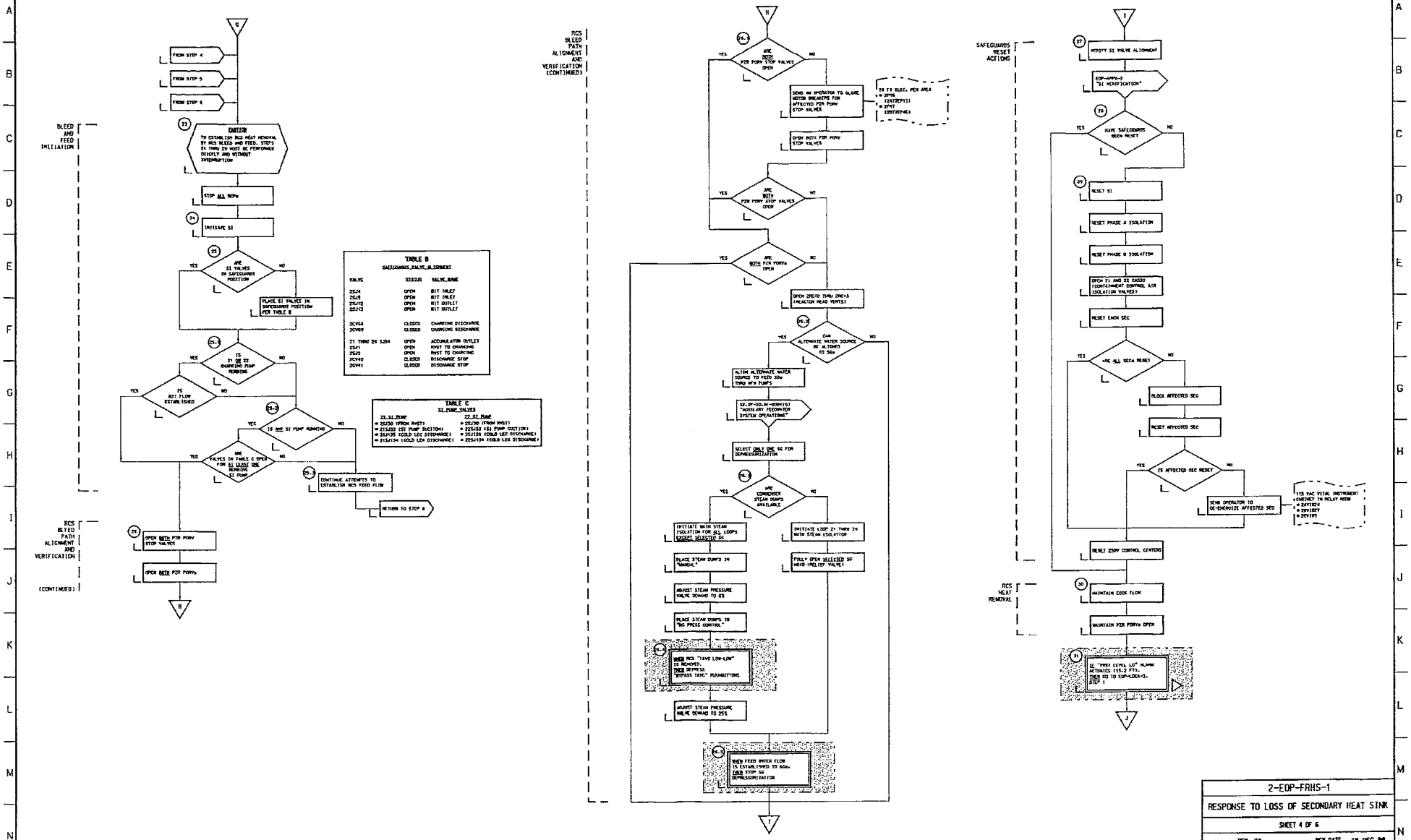

2-EOP-FRHS-1	
RESPONSE TO LOSS OF SECONDARY HEAT SINK	
SHEET 4 OF 6	
REV 24	REV DATE 18 DEC 98
SALEM GENERATING STATION	UNIT 2

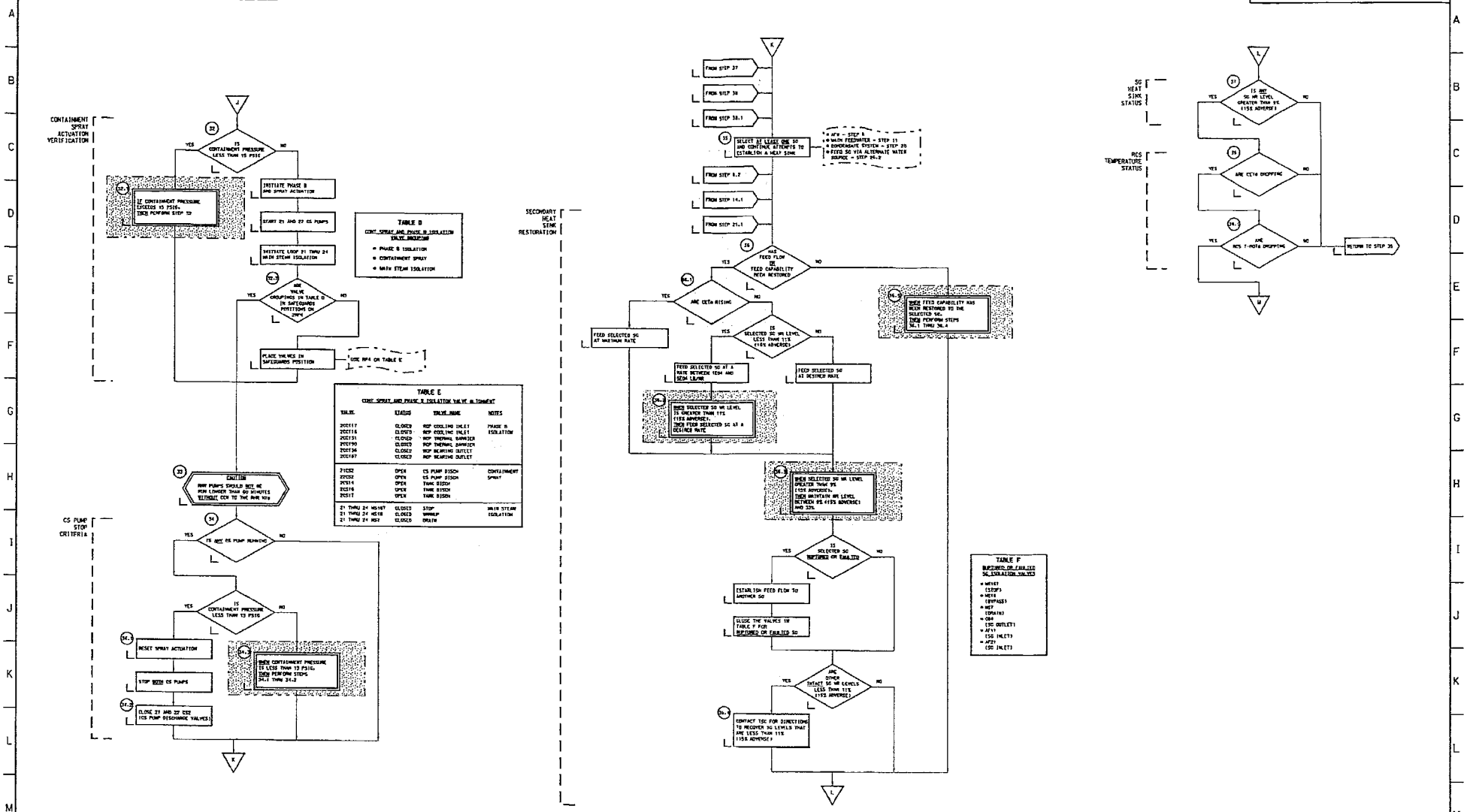

2-EOP-FRHS-1	
RESPONSE TO LOSS OF SECONDARY HEAT SINK	
SHEET 5 OF 6	
REV 24	REV DATE 18 DEC 98
SALEM GENERATING STATION	UNIT 2

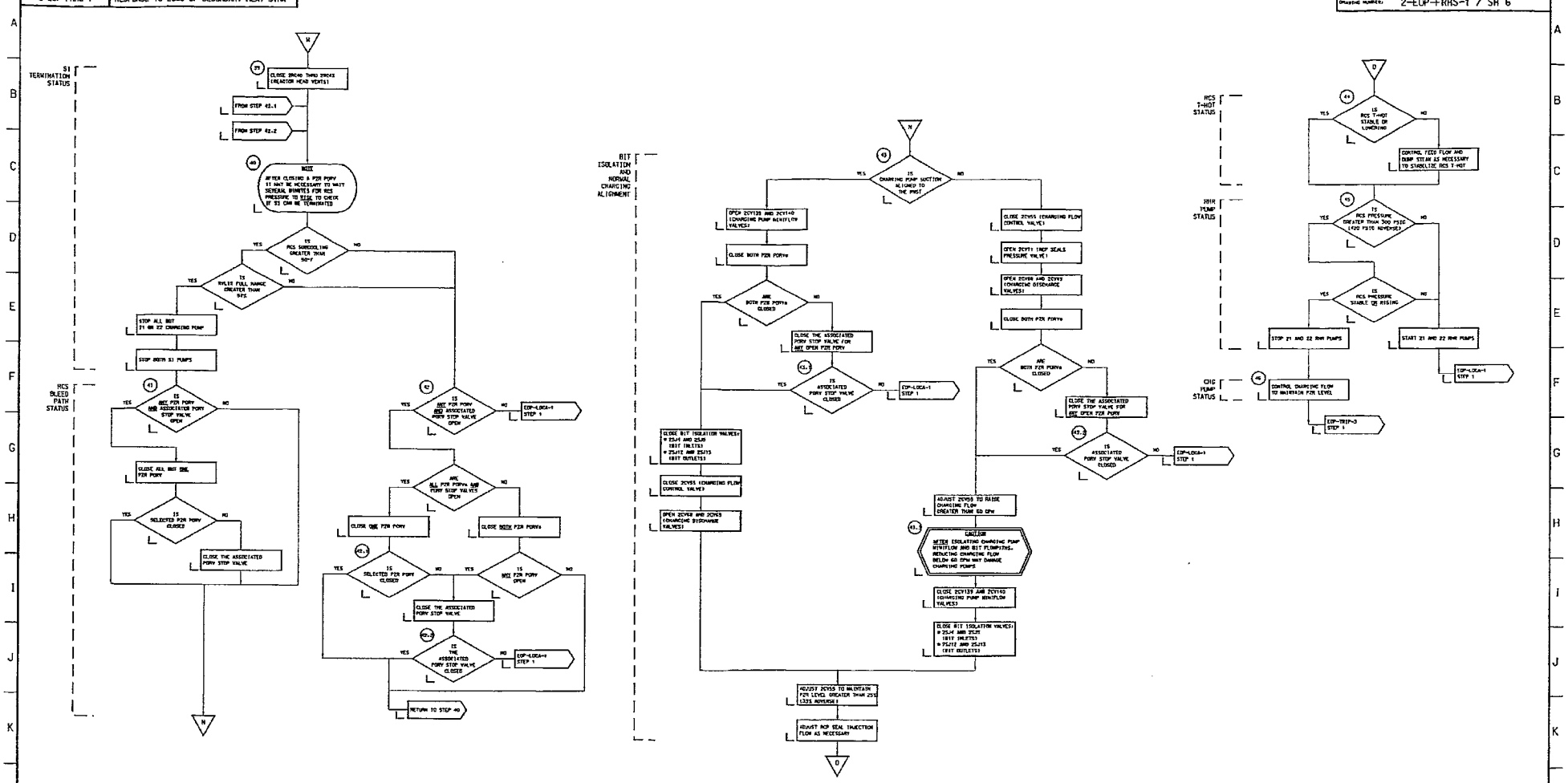

2-EOP-FRHS-1	
RESPONSE TO LOSS OF SECONDARY HEAT SINK	
SHEET 6 OF 6	
REV 24	REV DATE 18 DEC 98
SALEM GENERATING STATION	UNIT 2