Attachment 5

SGS EAL Technical Bases Document

(Strike-out Version)

PSEG
Nuclear LLC

Salem Generating Station

Event Classification Guide (ECG)

Emergency Action Level Technical Bases

Draft E
7/30/2010

SALEM EVENT CLASSIFICATION GUIDE (ECG)
EMERGENCY ACTION LEVEL (EAL) TECHNICAL BASES
TABLE OF CONTENTS

ECG – EAL Bases Front-Matter Materials:

EP-SC-111-200 SGS ECG – EAL Technical Bases Table of Contents

EP-SC-111-201 Emergency Action Level (EAL) Technical Basis Introduction

EP-SC-111-202 ECG Usage

ECG EAL Sections – Bases Information:

EP-SC-111-203 EAL Bases for Category R1 - Offsite Rad Conditions

EP-SC-111-204 EAL Bases for Category R2 - Onsite Rad Conditions / Fuel Pool Events

EP-SC-111-205 EAL Bases for Category R3 - CR/CAS Rad

EP-SC-111-206 EAL Bases for Category E - ISFSI

EP-SC-111-207 EAL Bases for Category H1 - Hazards - Natural & Destructive Phenomena (Quake, High Winds / Tornado, Turbine Rotating Component Failure, Internal Flooding, River Level, Vehicle Crash / Projectile Impact)

EP-SC-111-208 EAL Bases for Category H2 - Hazards - Fire or Explosion

EP-SC-111-209 EAL Bases for Category H3 - Hazards - Hazardous Gas

EP-SC-111-210 EAL Bases for Category H4 - Hazards - Security

EP-SC-111-211 EAL Bases for Category H5 - Hazards - Control Room Evacuation

EP-SC-111-212 EAL Bases for Category H6 - Hazards - EC Judgment

EP-SC-111-213 EAL Bases for Category S1 - System Malfunction - Loss of AC Power

SALEM EVENT CLASSIFICATION GUIDE (ECG)
EMERGENCY ACTION LEVEL (EAL) TECHNICAL BASES
TABLE OF CONTENTS

EP-SC-111-214	EAL Bases for Category S2 - System Malfunction - Loss of DC Power
EP-SC-111-215	EAL Bases for Category S3 - System Malfunction - ATWT/Criticality
EP-SC-111-216	EAL Bases for Category S4 - System Malfunction - Inability to Reach or Maintain Shutdown Conditions
EP-SC-111-217	EAL Bases for Category S5 - System Malfunction – Loss of Annunciators / Instrumentation
EP-SC-111-218	EAL Bases for Category S6 - System Malfunction - Communication
EP-SC-111-219	EAL Bases for Category S7 - System Malfunction - Fuel Clad Degradation
EP-SC-111-220	EAL Bases for Category S8 - System Malfunction - RCS Leakage
EP-SC-111-221	EAL Bases for Category F1 - Fission Product Barriers - Fuel
EP-SC-111-222	EAL Bases for Category F2 - Fission Product Barriers - RCS
EP-SC-111-223	EAL Bases for Category F3 - Fission Product Barriers - Containment
EP-SC-111-224	EAL Bases for Category C1 - Cold Shutdown / Refuel System Malfunction - Loss of AC Power
EP-SC-111-225	EAL Bases for Category C2 - Cold Shutdown / Refuel System Malfunction - Loss of DC Power
EP-SC-111-226	EAL Bases for Category C3 - Cold Shutdown / Refuel System Malfunction - RPV Level
EP-SC-111-227	EAL Bases for Category C4 - Cold Shutdown / Refuel System Malfunction - RCS Temperature

SALEM EVENT CLASSIFICATION GUIDE (ECG)
EMERGENCY ACTION LEVEL (EAL) TECHNICAL BASES
TABLE OF CONTENTS

EP-SC-111-228 EAL Bases for Category C5 - Cold Shutdown / Refuel System Malfunction - Communication

EP-SC-111-229 EAL Bases for Category C6 - Cold Shutdown / Refuel System Malfunction - Inadvertent Criticality

ECG – EAL Technical Bases Supporting Documents:

EP-SC-111-230 - Use of Fission Product Barrier Table (Tab – Attachment 1)

EP-SC-111-231 - EAL Bases Figures / Drawings (Tab – Attachment 2)

EP-SC-111-232 - EAL Definitions (Tab – Attachment 3)

EP-SC-111-233 - Glossary of Abbreviations & Acronyms (Tab – Attachment 4)

EP-SC-111-234 - SGS-to-NEI 99-01 EAL Cross-reference (Tab – Attachment 5)

EP-SC-111-235 - Salem EAL Rad Set-Point Calculation Document (Tab – Attachment 6)

PSEG
Nuclear LLC

Salem Generating Station
Event Classification Guide (ECG)

Emergency Action Level
Technical Bases

Draft E
7/30/10

TABLE OF CONTENTS

Section Page

1. Purpose 2
2. Emergency Classification Descriptions 2
3. Fission Product Barriers 3
4. EAL Relationship to EOPs 5
5. Symptom-Based vs. Event-Based Approach 5
6. EAL Organization 6
7. Operating Mode Applicability 8
8. EAL Technical Bases Organization 9
9. References 11

1. PURPOSE

This document provides an explanation and rationale for each Salem Generating Station (SGS) Emergency Action Level (EAL). It should be used to facilitate review of the SGS EALs, provide historical documentation for future reference and serve as a training aid. Decision-makers responsible for implementation of the Event Classification Guide (ECG) may use this document as a technical reference in support of EAL interpretation. This information may assist the Emergency Coordinator in making classifications, particularly those involving judgment or multiple events. The information may also be useful in training, for explaining event classifications to offsite officials, and facilitate regulatory review and approval of the classification scheme.

The expectation is that emergency classifications are to be made as soon as conditions are present and recognizable for the classification, but within 15 minutes or less in all cases of conditions present. Use of this document for assistance is not intended to delay the emergency classification.

This document is controlled pursuant to 10 CFR 50.54(q).

2. Emergency Classification Descriptions

The NRC and Federal Emergency Management Agency (FEMA) established four emergency classes for fixed nuclear facilities.

An emergency class is used for grouping off-normal nuclear power plant conditions according to their relative radiological seriousness and the time sensitive onsite and offsite actions needed to respond to such conditions.

The four emergency classes are (in order of less severe to most severe):

- Unusual Event (UE)
- Alert (A)
- Site Area Emergency (SAE)
- General Emergency (GE)

2.1 Unusual Event

Events are in progress or have occurred which indicate a potential degradation of the level of safety of the plant or indicates a security threat to facility protection has been initiated.

- The lowest level of emergency at the plant, which can usually be handled by the normal operating shift.

- No releases of radioactive material requiring offsite response or monitoring are expected unless further degradation of safety systems occurs. Dose consequences in Unrestricted Areas would not reach 20 mRem TEDE.

2.2 Alert

Events are in progress or have occurred which involve an actual or potential substantial degradation of the level of safety of the plant or a security event that involves probable life threatening risk to site personnel or damage to site equipment because of **HOSTILE ACTION**.

- Emergency Response personnel are required in addition to the normal operating shift. The entire emergency response organization is called in. The TSC is activated, and the EOF and ENC are manned and may activate if needed for support.

- Any release of radioactive material is expected to be limited to a small fraction of the EPA Protective Action Guideline exposure levels. Dose consequences in Unrestricted Areas would not reach 100 mRem TEDE.

2.3 Site Area Emergency

Events are in progress or have occurred which involve an actual or likely failure of plant functions needed for protection of the public or **HOSTILE ACTION** that result in intentional damage or malicious acts; (1) toward site personnel or equipment that could lead to the likely failure of or; (2) that prevent effective access to equipment needed for the protection of the public.

- The entire emergency response organization is activated.

- Any release of radioactive material is not expected to exceed EPA Protective Action Guideline exposure levels beyond the plant boundary. Dose consequences in Unrestricted Areas not to exceed 1000 mRem TEDE.

2.4 General Emergency

Events are in process or have occurred which involve actual or **IMMINENT** substantial core degradation or melting with potential for loss of containment integrity or **HOSTILE ACTIONS** that result in an actual loss of physical control of the facility.

- The entire emergency response organization is activated.

- Release of radioactive material can be expected to exceed EPA Protective Action Guideline exposure levels of 1000 mRem TEDE in Unrestricted Areas.

3. Fission Product Barriers

Many of the EALs derived from the NEI 99-01 methodology are fission product barrier based. That is, the conditions that define the EALs pertain to the loss or potential loss of one or more

of the three fission product barriers. "Loss" and "Potential Loss" signify the relative damage and threat of damage to the barrier. "Loss" means the barrier no longer assures containment of radioactive materials; "Potential Loss" infers an increased probability of barrier loss and decreased certainty of maintaining the barrier.

3.1 Barrier Descriptions

The EAL fission product barriers are:

Fuel Clad Barrier (FB): The Fuel Clad barrier consists of the zircalloy or stainless steel fuel bundle tubes that contain the fuel pellets.

Reactor Coolant System Barrier (RB): The Reactor Coolant System barrier includes the Reactor Coolant System primary side and its connections up to and including the pressurizer safety and relief valves, and other connections up to and including the primary isolation valves.

Containment (CB): The Containment barrier includes the containment building and connections up to and including the outermost containment isolation valves. This barrier also includes the main steam, feedwater, and blowdown line extensions outside the containment building up to and including the outermost secondary side isolation valve.

3.2 Emergency Classification Based on Fission Product Barrier Degradation

The following criteria for event classification relate to fission product barrier loss or potential loss:

UNUSUAL EVENT

ANY *loss or* ***ANY*** *potential loss of Containment*

ALERT

ANY *loss or* ***ANY*** *potential loss of either Fuel Clad or RCS*

SITE AREA EMERGENCY

Loss or potential loss of ***ANY*** *two barriers* ***OR***

Potential loss of 2 barriers with the loss of the 3rd barrier

GENERAL EMERGENCY

Loss of ***ANY*** *two barriers and loss or potential loss of third barrier*

Discrete threshold values associated with fission product barrier loss and potential loss are given in Attachment 1, Use of Fission Product Barrier Table. The bases for the thresholds are discussed in the following ECG sections:

- EP-SC-111-221 EAL Bases for Fuel Clad Barrier
- EP-SC-111-222 EAL Bases for RCS Barrier
- EP-SC-111-223 EAL Bases for Containment Barrier

A point system (described in Attachment 1) is used to determine fission product barrier emergency classification levels as well as Protective Action Recommendations (PARs) if a General Emergency is declared.

4. EAL Relationship to EOPs

Where possible, the EALs have been made consistent with and utilize the conditions defined in the SGS Emergency Operating Procedures (EOPs). While the symptoms that drive operator actions specified in the EOPs are not indicative of all possible conditions which warrant emergency classification, they define the symptoms, independent of initiating events, for which reactor plant safety and/or fission product barrier integrity are threatened. When these symptoms are clearly representative of one of the NEI Initiating Conditions, they have been utilized as an EAL. This permits rapid classification of emergency situations based on plant conditions without the need for additional evaluation or event diagnosis. Although some of the EALs presented here are based on conditions defined in the EOPs, classification of emergencies using these EALs is not dependent upon EOP entry or execution. The EALs can be utilized independently or in conjunction with the EOPs.

5. Symptom-Based vs. Event-Based Approach

To the extent possible, the EALs are symptom-based; that is, the action level threshold is defined by values of key plant operating parameters that identify emergency or potential emergency conditions. This approach is appropriate because it allows the full scope of variations in the types of events to be classified as emergencies. However, a purely symptom-based approach is not sufficient to address all events for which emergency classification is appropriate. Particular events to which no predetermined symptoms can be ascribed have also been utilized as EALs since they may be indicative of potentially more serious conditions not yet fully realized.

6. EAL Organization

6.1 EAL Groups

The EAL scheme is divided into three broad groups:

- EALs applicable under all plant operating modes – This group would be reviewed by the EAL-user any time emergency classification is considered.
- EALs applicable only under hot operating modes – This group would only be reviewed by the EAL-user when the plant is in Hot Shutdown, Hot Standby, Startup or Power Operations operating modes.
- EALs applicable only under cold operating modes – This group would only be reviewed by the EAL-user when the plant is in Cold Shutdown or Refueling operating modes or when the Reactor Vessel is defueled.

The purpose of the groups is to avoid review of hot condition EALs when the plant is in a cold condition and avoid review of cold condition EALs when the plant is in a hot condition. This approach significantly minimizes the total number of EALs that must be reviewed by the EAL-user for a given plant condition, reduces EAL-user reading burden and, thereby, speeds identification of the EAL that applies to the emergency.

6.2 EAL Categories and Subcategories

Within each EAL group, EALs are assigned to categories/subcategories. Category titles generally align with the EAL Recognition Categories of NEI 99-01.

Subcategory titles are selected to represent conditions that are operationally significant to the EAL-user. Subcategories are used as necessary to further divide the EALs of a category into logical sets of possible emergency classification thresholds.

The SGS EAL categories/subcategories and their relationship to NEI Recognition Categories are listed below.

SGS EALs	
Category	**Subcategory**
Group: Any Operating Mode:	
R – Abnormal Rad Release / Rad Effluent	1 – Offsite Rad Conditions 2 – Onsite Rad Conditions/Fuel Pool Events 3 - CR/CAS Rad
E - **ISFSI**	Spent Fuel Transit
H – Hazards & Other Conditions Affecting Plant Safety	1 – Natural & Destructive Phenomena 2 – Fire or Explosion 3 – Hazardous Gas 4 – Security 5 – Control Room Evacuation 6 – EC Judgment
Group: Hot Conditions:	
S – System Malfunction	1 – Loss of AC Power 2 – Loss of DC Power 3 – ATWT / Criticality 4 – Inability to Reach or Maintain Shutdown Conditions 5 – Instrumentation 6 – Communications 7 – Fuel Clad Degradation 8 – RCS Leakage
F – Fission Product Barrier Degradation	None
Group: Cold Conditions:	
C – Cold Shutdown / Refuel System Malfunction	1 – Loss of AC Power 2 – Loss of DC Power 3 – RCS Level 4 – RCS Temperature 5 – Communications 6 – Inadvertent Criticality

7. Operating Mode Applicability

With the exception of **ISFSI** (which is not assigned an operating mode), NEI 99-01 assigns one or more operating modes to each EAL. The **ISFSI** EAL will be applicable in all operating modes at Salem Generating Station; as such, operating mode applicability is N/A for the **ISFSI** EAL.

7.1 Operating Mode Definitions

MODE	K_{eff}	THERMAL POWER *	T_{AVG}
1. Power Operation	≥ 0.99	> 5%	≥ 350°F
2. Startup	≥ 0.99	≤ 5%	≥ 350°F
3. Hot Standby	< 0.99	0	≥ 350°F
4. Hot Shutdown	< 0.99	0	> 200°F & < 350°F
5. Cold Shutdown	< 0.99	0	≤ 200°F
6. Refueling **	≤ 0.95	0	≤ 140°F
Defueled	NA	NA	NA – no fuel in Reactor Vessel

* Excluding Decay Heat

** Fuel in the Reactor Vessel with the head closure bolts less than fully tensioned or with the head removed

7.3 Applicability

The plant operating mode that exists at the time that the event occurs (prior to any protective system or operator action is initiated in response to the condition) should be compared to the operating mode applicability of the EALs. If a lower or higher plant operating mode is reached before the emergency classification is made, the declaration shall be based on the operating mode that existed at the time the event occurred.

For events that occur in Cold Shutdown or Refueling, escalation is via EALs that have Cold Shutdown or Refueling for mode applicability, even if Hot Shutdown (or a higher mode) is entered during any subsequent heat-up. In particular, the fission product barrier EALs are applicable only to events that initiate in Hot Shutdown or higher.

8. EAL Technical Bases Organization

EAL technical bases are provided for each EAL according to:

- EAL category (R, E, H, S, F and C)
- EAL subcategory

Figures cited in EAL basis discussions are provided in Attachment 2. EAL defined terms and abbreviations and acronyms are listed in Attachments 3 and 4, respectively.

For each EAL, the following information is provided:

- EAL Category Letter & Title
- EAL Subcategory Number & Title
- Initiating Condition

  Site-specific description of the generic IC given in NEI 99-01.

- Operating Mode Applicability

  One or more of the following operating modes comprise the conditions to which each EAL is applicable: 1 - Power Operations, 2 – Startup, 3 - Hot Standby, 4 - Hot Shutdown, 5 - Cold Shutdown, 6 - Refueling, D - Defueled, N/A - Not Applicable or All.

  For Fission Product Barrier Table bases, Operating Mode Applicability is always Operating Modes 1, 2, 3 and 4. For these EALs, the barrier threat (Loss or Potential Loss) is listed.

- EAL# and Classification Level (EAL# & Point Value for Fission Product Barrier Table EAL bases):

  The EAL number is a unique identifier to support accurate communication of the emergency classification to onsite and offsite personnel. Four characters define each EAL identifier:

  Category R, E, H, C and S EALs: (Example: SU7.1)

  1. First character (letter) – Corresponds to the EAL category (R, E, H, C or S)
  2. Second character (letter) – Emergency classification level: U for Unusual Event, A for Alert, S for Site Area Emergency, or G for General Emergency.
  3. Third character (number): Subcategory number within the given category. Subcategories are sequentially numbered beginning with the number one (1).

If a category does not have a subcategory, this character is assigned the number one (1).

4. Fourth character (number): The numerical sequence of the EAL within the EAL subcategory. If the subcategory has only one EAL, it is given the number one (1).

Selected EALs in Category H have been designated as "Common Site" events. These events are annotated with the phrase "(Common Site)" immediately following the classification level.

Category F Fission Product Barrier EALs: (Example CB4-P)

1. First and second characters (letters) identify the barrier to which the EAL applies.

   FB: Fuel Clad Barrier

   RB: Reactor Coolant Barrier

   CB: Containment Barrier

2. Third character (number) – Sequential number beginning with the number one (1) for the first threshold in the barrier loss or potential loss of the Fission Product Barrier Table (Attachment 1)

3. Last character (letter) preceded by a dash (-) designates if EAL is for a potential loss or loss of the barrier in question.

   P: Potential Loss

   L: Loss

- <u>EAL (enclosed in rectangle)</u>

  Exact wording of the EAL as it appears in the EAL wallcharts.

- <u>Basis</u>

  The basis discussion applicable to the EAL taken from NEI 99-01.

- Explanation/Discussion/Definitions

  Description of the site-specific rationale for the EAL.

- EAL Basis Reference(s)

  Source documentation from which the EAL is derived. The first reference in each list gives the NEI 99-01 IC and example EAL number. A cross-reference of SGS EALs and NEI 99-01 ICs/EALs is given in Attachment 5.

9. REFERENCES

9.1 NEI 99-01 Revision 5, Methodology for Development of Emergency Action Levels, Final, February 2008 (ADAMS Accession Number of ML080450149)

9.2 NRC Regulatory Issue Summary (RIS) 2003-18, Supplement 2, Use of Nuclear Energy Institute (NEI) 99-01, Methodology for Development of Emergency Action Levels Revision 4, Dated January 2003 (December 12, 2005) (ADAMS Accession Number of ML051450482)

9.3 NRC Regulatory Issue Summary (RIS) 2007-02 Clarification of NRC Guidance for Emergency Notifications During Quickly Changing Events, Dated February 2007 (ADAMS Accession Number of ML062370311)

9.4 Salem EAL Comparison Matrix – NRC submittal document that defines differences between NEI 99-01, Rev. 05 and PSEG submitted Salem EALs

EVENT CLASSIFICATION GUIDE (ECG) USE

NOTE

It is expected the Shift Manager (SM) always serves at the Emergency Coordinator (EC) during the initiating event even if the SM is out of the control room. The Control Room Supervisor (CRS) assumes operational command and control responsibility for the shift crew but not as the EC. The CRS should ensure that the SM is immediately called back to the control room on any conditions that require ECG assessment. Only if the SM is not able (sick or hurt) may the CRS serve as the EC.

1. EC Judgment

The EALs described in the ECG are not all inclusive and will not identify each and every condition, parameter or event which could lead to an event classification. The following guidance should be used by the EC:

IF an EAL has been exceeded, but satisfaction of the Initiating Condition (IC) is in question,

THEN CLASSIFY the event IAW the EAL.

IF however, it is clear that the EAL has NOT been exceeded (and will not),

THEN DO NOT classify the event.

IF an IC has been satisfied, but exceeding the specific EAL is in question,

THEN CLASSIFY the event IAW the IC.

In any case,

IF the plant conditions are equivalent to one of the four emergency classes as described in Section 2 of EP-SC-111-201,

THEN CLASSIFY the event based on EC discretion IAW EALs in Category H.

2. Assessment Time

2.1 Timeliness

Assessment of an Emergency Condition should be completed in a timely manner, which is considered to be within 15 minutes of when events **are known or should have been known**. If an EAL specifies a duration time (e.g., loss of annunciators for 15 minutes or longer), the assessment time runs concurrently with the EAL duration time and is the same length.

2.2 Duration Time Exceeded

If an event is recognized or reported and the required duration time is known to have already been exceeded, the duration portion of the EAL should be considered as being satisfied and the assessment time for the remaining portions of the EAL should be within 15 minutes from the time of recognition.

3. Implementing Actions

The ECG is not a stand-alone document. At times, the ECG will refer the user to other attachments or procedures for accomplishment of specific evolutions such as: Accountability, Recovery, development of PARs, etc.

The ECG should be considered an "Implementing Procedure" and used in accordance with the requirements of a Level 2 – Reference Use procedure as defined in HU-AA-104-101, Procedure Use and Adherence. The ECG classification sections allow for judgment and decision making as to whether or not an EAL is exceeded.

NOTE
Comparison of redundant instrumentation, indications, and/or alarms should be used to confirm actual plant conditions.

4. Classification

The primary tools for determining the emergency classification level are the EAL wallcharts. The user of the EAL wallcharts may (but is not required to) consult the EAL Technical Bases in order to obtain additional information concerning the EALs under classification consideration. To use the EAL wallcharts, follow this sequence:

1. Assess the event and/or plant conditions and determine which EAL Group is most appropriate.
2. Review EAL categories and subcategories on the appropriate wallcharts.
3. For each applicable subcategory, review EALs in the subcategory beginning with the highest emergency classification level to the lowest classification level (left to right).
4. If the HOT conditions wallchart is employed, also review the Fission Product Barrier (FPB) Table (Wallchart sheet 3) as follows:
   a. Examine the FPB categories in the left column of the table.
   b. Select the category that most likely coincides with event conditions.
   c. Review all thresholds in this category for each fission product barrier.
   d. For each threshold that is exceeded, identify its point value and determine the classification level in accordance with the instructions on the Fission Product Barrier Table (or in EAL Technical Basis, Attachment 1).

NOTE
The Emergency Coordinator should classify and declare an emergency before an Emergency Action Level (EAL) is exceeded if, in the EC's judgment, it is determined that the EAL will be exceeded within 2 hours

5. REVIEW the associated EALs as compared to the event and SELECT the highest appropriate emergency. If identification of an EAL is questionable refer to paragraph 1 above.

   If there is any doubt with regard to assessment of a particular EAL, the ECG EAL Technical Basis Document should be reviewed. Words contained in an EAL that appear in uppercase and bold print (e.g., **VALID**) are defined at the end of the basis for the EAL. Words or numbers contained in an EAL that are in bold print but not uppercase are EAL threshold values (e.g., **≥ 15 minutes**).

6. If an EAL has been exceeded, equal level EALs or lower level EALs are not required to be seperately reported as long as the applicable information is communicated to the NRC using ECG Attachment 5, EP-SC-111-F5, NRC Data Sheet Completion Reference.

7. When the Shift Manager (SM) is the Emergency Coordinator, the Shift Technical Advisor (STA) is responsible to perform an independent verification of the EAL classification. The STA verification does not alleviate the requirement of the SM to make a timely classification. Should the SM fill the STA role, independent verification of the EAL classification will be delegated to another on-shift SRO, the Independent Assessor.

8. Identify and implement the referenced ECG form based on the Emergency Classification Level.

   - Unusual Event — Implement EC-SC-111-F1
   - Alert — Implement EC-SC-111-F2
   - Site Area Emergency — Implement EC-SC-111-F3
   - General Emergency — Implement EC-SC-111-F4
   - Unusual Event (Common Site) — Implement EC-SC-111-F8

9. Continue assessment after classification and attachment initiation, by returning to the EAL wallcharts to review EALs that may result in escalation/de-escalation of the emergency level.

5. Emergency Short Duration Events

1. A Short Duration emergency event is a transitory event that meets or exceeds one or more EALs for less than 15 minutes (i.e., action is taken and the plant returned to a condition in which no EAL applies). For a Short Duration event the Control Room Staff is aware of the event and realizes that an EAL had been exceeded.

2. Short Duration events that occur will be assessed and emergency classification made, if appropriate, within 15 minutes of control room indications or the receipt of the information, indicating that an EAL has or had been exceeded. This classification is to be made even if no EALs are currently being exceeded (i.e., actions have been taken to stabilize the Plant such that no EALs currently apply).

3. For some events, the condition may be corrected before a declaration has been made. The key consideration in this situation is to determine whether or not further plant damage occurred while the corrective actions were being taken. In some situations, this can be readily determined, in other situations, further analyses (e.g., coolant radiochemistry sampling, may be necessary). Classify the event as indicated and terminate the emergency once assessment shows that there were no consequences from the event and other termination criteria are met.

4. Guidance for classifying transient events addresses the period of time of event recognition and classification (15 minutes). However, in cases when EAL declaration criteria may be met momentarily during the normal expected response of the plant, declaration requirements should not be considered to be met when the conditions are a part of the designed plant response, or result from appropriate Operator actions.

6. Conditions Discovered After-the-Fact

There may be cases in which a plant condition that exceeded an EAL was not recognized at the time of occurrence but is identified well after the condition has occurred (e.g., as a result of routine log or record review), and the condition no longer exists. In these cases, an emergency should not be declared. Reporting requirements of 10 CFR 50.72 are applicable and the guidance of NUREG-1022, Rev. 2, Section 3, should be applied.

1. An After-the-Fact event is defined as an event that exceeded an EAL threshold and was not recognized at the time of occurrence but is identified greater than 1 hour after the condition has occurred (e.g., as a result of a routine log review, record review, post trip review, engineering evaluation) and the condition no longer exists.

2. For an After-the-Fact event the Control Room Staff was either not aware of the event or did not realize that an EAL was exceeded at the time of the occurrence.

3. Plant emergency events that are in progress or have occurred with ongoing adverse consequences/effects should not be considered After-the-Fact events and should therefore be classified and declared as an ongoing emergency event.

4. EMERGENCY CONDITIONS - After-the-Fact events that occur will be assessed and evaluated to ensure that no EAL currently applies. An emergency declaration is NOT required and a non-emergency, One-Hour Report should be initiated in accordance with non-emergency RALs in the ECG.

7. NRC Communications During An Emergency Guidance

1. Complete and accurate communications with the NRC Operations Center during emergencies is required and expected. The purpose of notifying the NRC within one-hour of an emergency, is to provide event information when immediate NRC action may be required to protect the public health and safety OR when the NRC needs accurate and timely information to respond to heightened public concern. If the information we provide is not accurate or does not contain sufficient detail, then we hamper the NRC from doing their job.

2. The NRC Data Sheet, along with the Initial Contact Message Form, is the primary vehicle to ensure the NRC is kept informed. General Guidance on completing the event description portion of the NRC Data Sheet is provided in the NRC Data Sheet (ECG Attachment 5).

8. Event Retraction Guidance

IF an ENS notification to the NRC was made as directed by the applicable ECG Attachment AND it is later determined that the event or condition is not reportable,

THEN the notification may be retracted as follows:

1. OBTAIN both the Operations Shift Manager's and Shift Manager's approval of any proposed retractions. Ensure Reg Assurance is consulted prior to approval to retract an Event.

2. COMPLETE "page 1" of ECG Attachment, EP-SC-111-F5, NRC Datasheet Completion Reference, providing a retraction of the original notification. Event Description Section of NRC Data Sheet should explain the rationale for the retraction.

3. NOTIFY the NRC Operations Center and NRC Resident Inspector.

4. RECORD on the "NRC Data Sheet" the name of the NRC contact that received the retraction information.

5. FORWARD the retraction "NRC Data Sheet" with the rest of the original attachment of the ECG that was implemented when the original notification was made to the Operations Shift Manager.

9. Common Site Events Guidance

1. Selected EALs in Category H (Unusual Event level only) have been designated as "Common Site" events. These events will be annotated with the words "Common Site" just below the mode applicability line in the wallcharts and next to the classification level in the EAL Bases document.

2. The Common Site UE ECG Attachment 8, EP-SC-111-F8, Declaration of "Common Site" UE, will direct the SM to establish agreement on which SM will declare and report the event. Therefore, either Salem or Hope Creek will report Common Site Unusual Events, but not both.

3. Events classified at an Alert or higher level require plant specific information to be provided to the states of New Jersey and Delaware, the NRC, and to PSEG Emergency Response Facilities and therefore will not be classified as common site events.

10. EAL Classification Considerations

1. Planned evolutions involve preplanning to address the limitations imposed by the condition, the performance of required surveillance testing, and the implementation of specific controls prior to knowingly entering the condition in accordance with the specific requirements of the SGS Technical Specifications. Activities which cause the site to operate beyond that allowed by the SGS Technical Specifications, planned or unplanned, may result in an EAL threshold being met or exceeded. **Planned evolutions to test, manipulate, repair, perform maintenance or modifications to systems and equipment that result in an EAL value being met or exceeded are not subject to classification and activation requirements as long as the evolution proceeds as planned and is within the operational limitations imposed by the specific operating license.** However, these conditions may be subject to the reporting requirements of 10 CFR 50.72.

2. All classifications are to be based upon **VALID** indications, reports or conditions. Indications, reports or conditions are considered **VALID** when they are verified by (1) an instrument channel check, or (2) indications on related or redundant indications, or (3) by direct observation by plant personnel, such that doubt related to the indication's operability, the condition's existence, or the report's accuracy is removed. Implicit in this definition is the need for timely assessment.

3. Although the majority of the EALs provide very specific thresholds, the Emergency Coordinator must remain alert to events or conditions that lead to the conclusion that exceeding the EAL is **IMMINENT**. If, in the judgment of the Emergency Coordinator, an **IMMINENT** situation is at hand, the classification should be made as if the threshold has been exceeded. While this is particularly prudent at the higher emergency classification levels (as the early classification may provide for more effective implementation of protective measures), it is nonetheless applicable to all emergency classification levels.

4. When multiple simultaneous events occur, the emergency classification level is based on the highest EAL reached. For example, two Alerts remain in the Alert category. Or, an Alert and a Site Area Emergency is a Site Area Emergency. Further guidance is provided in RIS 2007-02, Clarification of NRC Guidance for Emergency Notifications During Quickly Changing Events.

5. Another important aspect of usable EAL guidance is the consideration of what to do when the risk posed by an emergency is clearly decreasing. A combination approach involving recovery from General Emergencies and some Site Area Emergencies and termination from Unusual Events, Alerts, and certain Site Area Emergencies causing no long term plant damage appears to be the best choice. Downgrading to lower emergency classification levels adds notifications but may have merit under certain circumstances. Refer to procedure NC.EP-EP.ZZ-0405, Emergency Termination – Reduction – Recovery, for detailed directions.

6. The logic used for the Fission Product Barrier EALs reflects the following considerations:

    - The Fuel Clad Barrier and the RCS Barrier are weighted more heavily than the Primary Containment Barrier. Unusual Events associated with RCS and Fuel Clad Barriers are addressed under EALs in Category S, System Malfunctions.

    - The ability to escalate to higher emergency classification levels as an event deteriorates must be maintained. For example, RCS leakage steadily increasing would represent an increasing risk to public health and safety.

    - The Primary Containment Barrier should not be declared lost or potentially lost based on exceeding Technical Specification action statement criteria, unless there is an event in progress requiring mitigation by the Primary Containment barrier. When no event is in progress (Loss or Potential Loss of either Fuel Clad and/or RCS barrier) the Primary Containment Barrier status is addressed by Technical Specifications.

7. Since Salem is a multi-unit station with shared safety-related system and functions, emergency classification level upgrading must also consider the effects of a loss of a common system on more than one unit (e.g., potential for radioactive release from more than one core). For example, the control panels for both units in close proximity within the same room. Thus, Control Room evacuation most likely would affect both units. There are a number of other systems and functions which may be shared. This must be considered in the emergency classification level declaration.

8. SGS and HCGS share a common **ISFSI**. Classification of events related to spent fuel stored at the **ISFSI** appear only in the HCGS EAL scheme. Classification of events related to the transfer of spent fuel from SGS to the **ISFSI** are addressed in the SGS EAL scheme (EAL EU1.1).

This page intentionally blank

EALs for:

Abnormal Radiological Levels

&

ISFSI

EAL Category: R – Abnormal Rad Levels / Rad Effluent

EAL Subcategory: 1 – Offsite Rad Conditions

Initiating Condition: Any release of gaseous or liquid radioactivity to the environment greater than 2 times the ODCM for 60 minutes or longer

Mode Applicability: All

EAL# & Classification Level: **RU1.1 – UNUSUAL EVENT**

EAL:

VALID gaseous monitor reading **> Table R-1** column "UE"

AND

≥ 60 minutes have elapsed (Note 2)

Note 2: The Emergency Coordinator should NOT wait until the applicable time has elapsed, but should declare the event as soon as it is determined that the release duration has exceeded, or will likely exceed, the applicable time. In the absence of data to the contrary, assume that the release duration has exceeded the applicable time if an ongoing release is detected and the release start time is unknown.

Table R-1 Effluent Monitor Classification Thresholds*						
	Release Point	**Monitor**	GE	SAE	ALERT	UE
Gaseous	Plant Vent Effluent Noble Gas Unit 1 + Unit 2	1R41D + 2R41D **OR** SPDS combined release rate	8.48E+09 µCi/sec	8.48E+08 µCi/sec	4.84E+07 µCi/sec	4.84E+05 µCi/sec
Liquid	Containment Fan Coil Process	1(2)R13A/B	----	----	1.64E+05 cpm	1.64E+03 cpm
	Liquid Radwaste Disposal Process	1R18 2R18	----	----	N/A ***See EAL RA1.3***	U1= 5.50E+05 cpm U2= 9.90E+05 cpm
	Steam Generator Blowdown Process	1R19A-D 2R19A-D	----	----	U1= 6.40E+05 cpm U2= 8.30E+05 cpm	U1= 6.40E+03 cpm U2= 8.30E+03 cpm
	Non-Rad Liquid Waste	2R37	----	----	3.60E+05 cpm	3.60E+03 cpm

* For high radiation conditions on Letdown Line Monitor 1R31A (2R31), refer to EAL SU7.1

Basis:

~~[*Refer to Appendix A for a detailed basis of the radiological effluent IC/EALs.*]~~

~~The Emergency Director Coordinator should not wait until the applicable time has elapsed, but should declare the event as soon as it is determined that the condition will likely exceed the applicable time.~~

This ~~IC~~ EAL addresses a potential decrease in the level of safety of the plant as indicated by a radiological release that exceeds regulatory commitments for an extended period of time.

Nuclear power plants incorporate features intended to control the release of radioactive effluents to the environment. Further, there are administrative controls established to prevent unintentional releases, or control and monitor intentional releases. ~~[*These controls are located in the Off-site Dose Calculation Manual (ODCM), and for plants that have not implemented Generic Letter 89-01, in the Radiological Effluent Technical Specifications (RETS).*]~~ The occurrence of extended, uncontrolled radioactive releases to the environment is indicative of a degradation in these features and/or controls.~~[*Some sites may find it advantageous to address gaseous and liquid releases with separate EALs.*]~~

The threshold values that equates to a ~~RETS~~ multiple of two times the ODCM limits ~~are~~ is specified in ~~AU1~~ EAL RU1.1 ~~and AA1~~ RA1 only to distinguish between non-emergency conditions~~, and from each other~~. While ~~these~~ this multiples obviously corresponds to an off-site dose or dose rate, the emphasis in classifying ~~these~~ this events is the degradation in the level of safety of the plant, not the magnitude of the associated dose or dose rate.

~~[*Releases should not be prorated or averaged. For example, a release exceeding 4x ODCM for 30 minutes does not meet the threshold.*]~~

~~This EAL includes any release for which a radioactivity discharge permit was not prepared, or a release that exceeds the conditions (e.g., minimum dilution flow, maximum discharge flow, alarm setpoints, etc.) on the applicable permit.~~

~~EAL #1~~

This EAL addresses radioactivity releases, that for whatever reason, cause effluent radiation monitor readings to exceed the threshold identified in the ~~IC~~EAL.

This EAL is intended for sites that have established effluent monitoring on non-routine release pathways for which a discharge permit would not normally be prepared.

~~[*The ODCM establishes a methodology for determining effluent radiation monitor setpoints. The ODCM specifies default source terms and, for gaseous releases, prescribes the use of pre-determined annual average meteorology in the most limiting downwind sector for showing compliance with the regulatory commitments. This EAL should be determined using this methodology.*]~~

~~EAL #2~~

~~This EAL addresses radioactivity releases, that for whatever reason, cause effluent radiation monitor readings to exceed the threshold identified in the IC established by the radioactivity discharge permit. This value may be associated with a planned batch release, or a continuous release path.~~

~~[*In either case, the value is established by the ODCM to warn of a release that is not in compliance with the RETS. Indexing the EAL to the ODCM setpoints in this manner insures that the EAL will never be less than the setpoint established by a specific discharge permit.*]~~

~~EAL #3~~

~~This EAL addresses uncontrolled releases that are detected by sample analyses, particularly on unmonitored pathways, e.g., spills of radioactive liquids into storm drains, heat exchanger leakage in river water systems, etc.~~

~~EALs #4 and #5~~

~~The 0.10 mR/hr value in EAL #4, and the site specific value for EAL #5,is based on a release rate not exceeding 500 mrem per year.~~

~~[*As provided in the ODCM / RETS, prorated over 8766 hours, multiplied by two, and rounded. (500 ÷ 8766 × 2 = 0.114).*]~~

~~EAL #1 and #2 directly correlate with the IC since annual average meteorology is required to be used in showing compliance with the ODCM and is used in calculating the alarm setpoints. EALs #4 and #5 are a function of actual meteorology, which will likely be different from the limiting annual average value. Thus, there will likely be a numerical inconsistency.~~

~~The underlying basis of this EAL involves the degradation in the level of safety of the plant implied by the uncontrolled release. Exceeding EAL #4 or #5 is an indication of an uncontrolled release.~~

Explanation/Discussion/Definitions:

The column "UE" gaseous release value in Table R-1 (Unit 1 + Unit 2) represents two times the associated effluent monitor alarm setpoint. This setpoint is set to preclude exceeding the ODCM release rate limits associated with the specified monitor.

The plant vent monitors (R41) sample and detect noble gases and collect samples of particulates and iodine discharge through the plant vent. Channel D (R41D) provides the gaseous effluent release rate (µCi/sec) by combining (product of) the on-range R41A through R41C with plant vent flow (cc/sec).

Definitions:

> **VALID**: An indication, report, or condition, is considered to be **VALID** when it is verified by (1) an instrument channel check, or (2) indications on related or redundant indicators, or (3) by direct observation by plant personnel, such that doubt related to the indicator's operability, the condition's existence, or the report's accuracy is removed. Implicit in this definition is the need for timely assessment.

EAL Basis Reference(s):

1. NEI 99-01 Rev. 5, AG1 Example EAL #1
2. Salem Radiological EAL Setpoint Calculation Document NEI 99-01 Rev. 5 EALs (Attachment 6)
3. FSAR Section 11.4 Radiological Monitoring
4. PSBP 315733(4) Radiation Monitoring System Control Manual

This page intentionally blank

EAL Category: R – Abnormal Rad Levels / Rad Effluent

EAL Subcategory: 1 – Offsite Rad Conditions

Initiating Condition: Any release of gaseous or liquid radioactivity to the environment greater than 2 times the ODCM for 60 minutes or longer

EAL# & Classification Level: **RU1.2 – UNUSUAL EVENT**

Mode Applicability: All

EAL:

ANY VALID liquid monitor reading **> Table R-1** column "UE"

AND

≥ 60 minutes have elapsed (Note 2)

Note 2: The Emergency Coordinator should NOT wait until the applicable time has elapsed, but should declare the event as soon as it is determined that the release duration has exceeded, or will likely exceed, the applicable time. In the absence of data to the contrary, assume that the release duration has exceeded the applicable time if an ongoing release is detected and the release start time is unknown.

Table R-1 Effluent Monitor Classification Thresholds*

	Release Point	Monitor	GE	SAE	ALERT	UE
Gaseous	Plant Vent Effluent Noble Gas Unit 1 + Unit 2	1R41D + 2R41D **OR** SPDS combined release rate	8.48E+09 µCi/sec	8.48E+08 µCi/sec	4.84E+07 µCi/sec	4.84E+05 µCi/sec
Liquid	Containment Fan Coil Process	1(2)R13A/B	----	----	1.64E+05 cpm	1.64E+03 cpm
Liquid	Liquid Radwaste Disposal Process	1R18 2R18	----	----	N/A ***See EAL RA1.3***	U1= 5.50E+05 cpm U2= 9.90E+05 cpm
Liquid	Steam Generator Blowdown Process	1R19A-D 2R19A-D	----	----	U1= 6.40E+05 cpm U2= 8.30E+05 cpm	U1= 6.40E+03 cpm U2= 8.30E+03 cpm
Liquid	Non-Rad Liquid Waste	2R37	----	----	3.60E+05 cpm	3.60E+03 cpm

* For high radiation conditions on Letdown Line Monitor 1R31A (2R31), refer to EAL SU7.1

Basis:

~~The Emergency Director~~ Coordinator ~~should not wait until the applicable time has elapsed, but should declare the event as soon as it is determined that the condition will likely exceed the applicable time.~~

This ~~IC~~EAL addresses a potential decrease in the level of safety of the plant as indicated by a radiological release that exceeds regulatory commitments for an extended period of time.

Nuclear power plants incorporate features intended to control the release of radioactive effluents to the environment. Further, there are administrative controls established to prevent unintentional releases, or control and monitor intentional releases. ~~[*These controls are located in the Off-site Dose Calculation Manual (ODCM), and for plants that have not implemented Generic Letter 89-01, in the Radiological Effluent Technical Specifications (RETS).]*~~ The occurrence of extended, uncontrolled radioactive releases to the environment is indicative of a degradation in these features and/or controls.~~[*Some sites may find it advantageous to address gaseous and liquid releases with separate EALs.*]~~

The threshold values that equate to a ~~RETS~~ multiple of two times the ODCM limits ~~are~~ is are specified in ~~AU1~~ EAL RU1.2 ~~and AA1~~ ~~RA1~~ only to distinguish between non-emergency conditions~~, and from each other~~. While ~~these~~ this multiple~~s~~ obviously corresponds to an off-site dose or dose rate, the emphasis in classifying ~~these~~ this events is the degradation in the level of safety of the plant, not the magnitude of the associated dose or dose rate.

~~[*Releases should not be prorated or averaged. For example, a release exceeding 4x ODCM for 30 minutes does not meet the threshold.*]~~

~~This EAL includes any release for which a radioactivity discharge permit was not prepared, or a release that exceeds the conditions (e.g., minimum dilution flow, maximum discharge flow, alarm setpoints, etc.) on the applicable permit.~~

~~EAL #1~~

This EAL addresses radioactivity releases, that for whatever reason, cause effluent radiation monitor readings to exceed the threshold identified in the ~~IG~~EAL.

This EAL is intended for sites that have established effluent monitoring on non-routine liquid release pathways for which a discharge permit would not normally be prepared (Containment Fan Coil, SG Blowdown & Chemical Waste Basin) as well as planned batch releases for which a radioactivity discharge permit is prepared (Liquid Radwaste Disposal).

~~[*The ODCM establishes a methodology for determining effluent radiation monitor setpoints. The ODCM specifies default source terms and, for gaseous releases, prescribes the use of pre-determined annual average meteorology in the most limiting downwind sector for showing compliance with the regulatory commitments. This EAL should be determined using this methodology.*]~~

~~EAL #2~~

~~This EAL addresses radioactivity releases, that for whatever reason, cause effluent radiation monitor readings to exceed the threshold identified in the IC established by the radioactivity discharge permit. This value may be associated with a planned batch release, or a continuous release path.~~

~~[*In either case, the value is established by the ODCM to warn of a release that is not in compliance with the RETS. Indexing the EAL to the ODCM setpoints in this manner insures that the EAL will never be less than the setpoint established by a specific discharge permit.*]~~

~~EAL #3~~

~~This EAL addresses uncontrolled releases that are detected by sample analyses, particularly on unmonitored pathways, e.g., spills of radioactive liquids into storm drains, heat exchanger leakage in river water systems, etc.~~

~~EALs #4 and #5~~

~~The 0.10 mR/hr value in EAL #4, and the site specific value for EAL #5,is based on a release rate not exceeding 500 mrem per year.~~

~~[*As provided in the ODCM / RETS, prorated over 8766 hours, multiplied by two, and rounded. (500 ÷ 8766 × 2 = 0.114).*]~~

~~EAL #1 and #2 directly correlate with the IC since annual average meteorology is required to be used in showing compliance with the ODCM and is used in calculating the alarm setpoints. EALs #4 and #5 are a function of actual meteorology, which will likely be different from the limiting annual average value. Thus, there will likely be a numerical inconsistency.~~

~~The underlying basis of this EAL involves the degradation in the level of safety of the plant implied by the uncontrolled release. Exceeding EAL #4 or #5 is an indication of an uncontrolled release.~~

Explanation/Discussion/Definitions:

The column "UE" liquid release values in Table R-1 represent two (2) times the High Alarm setpoints (except 2R18 which is 1.5 times) associated with the specified monitors. The High Alarm setpoints are obtained from channel calibrations procedures as listed in the reference section of this bases.

Instrumentation that may be used to assess this EAL is listed below:

- Containment Fan Coil Process 1(2)R13A/B (Upper Range is 1.00E+06 cpm)

  Service water is used as the cooling medium for the containment fan coil units (CFCUs) and could be contaminated if the cooling coil leaks with containment pressure above Service Water pressure. Since the Service Water System discharges into Circ Water and then back to the river, the fan cooler units will be indirectly monitored for radioactivity. This is done through the use of two monitors for the five fan coolers. The two monitors sample two of the three Circ Water headers that contain Service Water used to cool the CFCUs just before it discharges back to the river. Alarms on these monitors would be indicative of a CFCU leak but could also be associated with other systems including from the pathways monitored by the R18s, R19s and the R37, which also discharge into Circ Water and are monitored by the 1(2)R13A/B. If simultaneous Rad Alarms are received on an R13 monitor along with any R18s, R19s or R37 monitor, then the source of the Rad effluent may not be a CFCU leak and further investigation would be warranted. However, exceeding the EAL threshold value for ≥ 60 minutes should result in Unusual Event classification even if the exact source remains questionable.

- Liquid Radwaste Disposal Process 1(2)R18 (Upper Range is 1.00E+06 cpm)

  This channel continuously monitors all Waste Disposal System liquid releases from the plant. Automatic valve closure action is initiated by this monitor when a high radiation level is indicated and alarmed in the Control Room. Liquid Radwaste discharges to Circ Water which then discharges to the Delaware River.

  This Unit 1 EAL threshold is based on 2 times the High Alarm Set Point as defined in the Channel Calibration procedure.

  This Unit 2 EAL threshold is based on a value that is approximately 1.5 times the High Alarm Set Point as defined in the Channel Calibration procedure which ensures that the threshold value is within the upper range of the monitor.

  Since the ranges of the 1(2) R18s monitors do not support EAL threshold values of 200 times the high alarm value, no Alert threshold is provided on Table R-1. If the release pathway could not be isolated as expected, the EC should refer to EAL RA1.3 for Alert threshold values based on sample analysis.

- Steam Generator Blowdown Process 1(2)R19A-D (Upper Range is 1.00E+06 cpm)

  Each of these channels (four channels per unit) monitors the liquid phase of the steam generators for radioactivity, which would indicate a primary-to-secondary system leak. The four steam generator blowdown sample lines each have a radiation monitor. A high radiation alarm signal will close the No. 12 (22) steam generator blowdown tank inlet

valves and the steam generator blowdown isolation valves on the affected steam generator.

- Non-Rad Liquid Waste 2R37 (Upper Range is 1.00E+06 cpm)

The non-radwaste basin provides a potential release path due to the fact that steam generator blowdown is directed to the basin during plant startup. This monitor provides for continuous monitoring of the discharge from the non-radwaste basin. Non-Rad Liquid Waste discharges to Circ Water which then discharges to the Delaware River.

Definitions:

VALID: An indication, report, or condition, is considered to be **VALID** when it is verified by (1) an instrument channel check, or (2) indications on related or redundant indicators, or (3) by direct observation by plant personnel, such that doubt related to the indicator's operability, the condition's existence, or the report's accuracy is removed. Implicit in this definition is the need for timely assessment.

EAL Basis Reference(s):

1. NEI 99-01 Rev. 5, AU1 Example EAL #2
2. Salem ODCM Section 3.3.8 – Radioactive Liquid Effluent Monitoring Instrumentation
3. Salem ODCM Figures 1-1 and 1-2, Liquid Release Flow paths for Unit 1 and Unit 2
4. UFSAR Section 11.4 Radiation Monitoring
5. PSBP 315733(4) Radiation Monitoring System Control Manual
6. S1(S2).IC-CC.RM-0097/98, Channel Cal for 1/2R13A/B
7. S1(S2).IC-CC.RM-0028, Channel Cal for 1/2R18
8. S1(S2).IC-CC.RM-0029/30/31/32, Channel Cal for 1/2R19A/B/C/D
9. S2.IC-CC.RM-0060, Channel Cal for 2R37

EAL Category: R – Abnormal Rad Levels / Rad Effluent

EAL Subcategory: 1 – Offsite Rad Conditions

Initiating Condition: Any release of gaseous or liquid radioactivity to the environment greater than 2 times the ODCM for 60 minutes or longer

EAL# & Classification Level: **RU1.3 – UNUSUAL EVENT**

Mode Applicability: All

EAL:

Confirmed sample analyses for gaseous or liquid releases indicate concentrations or release rates **> Table R-2** column **"UE"**

AND

≥ 60 minutes have elapsed (Note 2)

Note 2: The Emergency Coordinator should NOT wait until the applicable time has elapsed, but should declare the event as soon as it is determined that the release duration has exceeded, or will likely exceed, the applicable time. In the absence of data to the contrary, assume that the release duration has exceeded the applicable time if an ongoing release is detected and the release start time is unknown.

Table R-2 Effluent Sample Classification Thresholds

	Release Point	Sample	ALERT	UE
Gaseous	Plant Vent	NG	6.40E-01 μCi/cc	6.40E-03 μCi/cc
		I-131	5.60E-05 μCi/cc	5.60E-07 μCi/cc
	Unmonitored	Isotopic	200 x ODCM 3/4.11.2	2 x ODCM 3/4.11.2
Liquid	Containment Fan Coil	Isotopic	200 x ODCM 3/4.11.1	2 x ODCM 3/4.11.1
	Liquid Radwaste Disposal	Isotopic	200 x ODCM 3/4.11.1	2 x ODCM 3/4.11.1
	Steam Generator Blowdown	Isotopic	200 x ODCM 3/4.11.1	2 x ODCM 3/4.11.1
	Chemical Waste Basin	Isotopic	200 x ODCM 3/4.11.1	2 x ODCM 3/4.11.1
	Unmonitored	Isotopic	200 x ODCM 3/4.11.1	2 x ODCM 3/4.11.1

Basis:

~~[*Refer to Appendix A for a detailed basis of the radiological effluent IC/EALs.*]~~

~~The Emergency Coordinator should not wait until the applicable time has elapsed, but should declare the event as soon as it is determined that the condition will likely exceed the applicable time.~~

This ~~IC~~EAL addresses a potential decrease in the level of safety of the plant as indicated by a radiological release that exceeds regulatory commitments for an extended period of time.

Nuclear power plants incorporate features intended to control the release of radioactive effluents to the environment. Further, there are administrative controls established to prevent unintentional releases, or control and monitor intentional releases. ~~[*These controls are located in the Off-site Dose Calculation Manual (ODCM), and for plants that have not implemented Generic Letter 89-01, in the Radiological Effluent Technical Specifications (RETS).]*~~ The occurrence of extended, uncontrolled radioactive releases to the environment is indicative of a degradation in these features and/or controls.~~[*Some sites may find it advantageous to address gaseous and liquid releases with separate EALs.*]~~

The ~~RETS~~ multiple of two times the ODCM limits ~~are~~ is specified in ~~AU1 and AA1~~EAL RU1.3 only to distinguish between non-emergency conditions~~, and from each other~~. While ~~these~~ this multiples obviously corresponds to an off-site dose or dose rate, the emphasis in classifying ~~these~~ this events is the degradation in the level of safety of the plant, not the magnitude of the associated dose or dose rate.

~~[*Releases should not be prorated or averaged. For example, a release exceeding 4x ODCM for 30 minutes does not meet the threshold.*]~~

This EAL includes any release for which a radioactivity discharge permit was not prepared, or a release that exceeds the conditions (e.g., minimum dilution flow, maximum discharge flow, alarm setpoints, etc.) on the applicable permit for ≥ 60 minutes.

~~EAL #1~~

~~This EAL addresses radioactivity releases, that for whatever reason, cause effluent radiation monitor readings to exceed the threshold identified in the IC.~~

~~This EAL is intended for sites that have established effluent monitoring on non-routine release pathways for which a discharge permit would not normally be prepared.~~

~~[*The ODCM establishes a methodology for determining effluent radiation monitor setpoints. The ODCM specifies default source terms and, for gaseous releases, prescribes the use of pre-determined annual average meteorology in the most limiting downwind sector for showing compliance with the regulatory commitments. This EAL should be determined using this methodology.*]~~

~~EAL #2~~

~~This EAL addresses radioactivity releases, that for whatever reason, cause effluent radiation monitor readings to exceed the threshold identified in the IC established by the radioactivity discharge permit. This value may be associated with a planned batch release, or a continuous release path.~~

~~[*In either case, the value is established by the ODCM to warn of a release that is not in compliance with the RETS. Indexing the EAL to the ODCM setpoints in this manner insures that the EAL will never be less than the setpoint established by a specific discharge permit.*]~~

~~EAL #3~~

This EAL addresses uncontrolled releases that are detected by sample analyses, particularly on unmonitored pathways, e.g., spills of radioactive liquids into storm drains, heat exchanger leakage in river water systems, etc.

~~EALs #4 and #5~~

~~The 0.10 mR/hr value in EAL #4, and the site specific value for EAL #5,is based on a release rate not exceeding 500 mrem per year.~~

~~[*As provided in the ODCM / RETS, prorated over 8766 hours, multiplied by two, and rounded. (500 ÷ 8766 × 2 = 0.114).*]~~

~~EAL #1 and #2 directly correlate with the IC since annual average meteorology is required to be used in showing compliance with the ODCM and is used in calculating the alarm setpoints. EALs #4 and #5 are a function of actual meteorology, which will likely be different from the limiting annual average value. Thus, there will likely be a numerical inconsistency.~~

~~The underlying basis of this EAL involves the degradation in the level of safety of the plant implied by the uncontrolled release. Exceeding EAL #4 or #5 is an indication of an uncontrolled release.~~**Explanation/Discussion/Definitions:**

Releases in excess of two times the site Offsite Dose Calculation Manual (ODCM) Section 3/4.11.1 or 3/4.11.2 limits that continue for 60 minutes or longer represent an uncontrolled situation and hence, a potential degradation in the level of safety. The final integrated dose (which is very low in the UNUSUAL EVENT emergency class) is not the primary concern here; it is the degradation in plant control implied by the fact that the release was not isolated within 60 minutes.

Table R-2 provides calculated radiological release noble gas and iodine sample concentrations that equate to a release that is 2 times the ODCM limit (Section 3/4.11.2) of 500 mRem/year as well as specifying liquid release effluent sample streams 2 times the ODCM limits (Section 3/4.11.1).

Each Salem unit has a single gaseous release point (Plant Vent) for which a sample concentration threshold has been calculated.

EAL Basis Reference(s):

1. NEI 99-01 Rev. 5, AU1 Example EAL #3
2. Off-Site Dose Calculation Manual, Section 3/4.11.1 – Liquid Effluents
3. Off-Site Dose Calculation Manual, Section 3/4.11.2 – Gaseous Effluents
4. Salem Radiological EAL Setpoint Calculation Document NEI 99-01 Rev. 5 EALs (Attachment 6)

This page intentionally blank

EAL Category: R – Abnormal Rad Levels / Rad Effluent

EAL Subcategory: 1 – Offsite Rad Conditions

Initiating Condition: Any release of gaseous or liquid radioactivity to the environment greater than 200 times the ODCM for 15 minutes or longer

Mode Applicability: All

EAL# & Classification Level: **RA1.1 – ALERT**

EAL:

VALID gaseous monitor reading **> Table R-1** column "ALERT"

AND

≥ 15 minutes have elapsed (Note 2)

Note 2: The Emergency Coordinator should NOT wait until the applicable time has elapsed, but should declare the event as soon as it is determined that the release duration has exceeded, or will likely exceed, the applicable time. In the absence of data to the contrary, assume that the release duration has exceeded the applicable time if an ongoing release is detected and the release start time is unknown.

Table R-1 Effluent Monitor Classification Thresholds*						
	Release Point	**Monitor**	GE	SAE	ALERT	UE
Gaseous	Plant Vent Effluent Noble Gas Unit 1 + Unit 2	1R41D + 2R41D **OR** SPDS combined release rate	8.48E+09 µCi/sec	8.48E+08 µCi/sec	4.84E+07 µCi/sec	4.84E+05 µCi/sec
Liquid	Containment Fan Coil Process	1(2)R13A/B	----	----	1.64E+05 cpm	1.64E+03 cpm
	Liquid Radwaste Disposal Process	1R18 2R18	----	----	N/A ***See EAL RA1.3***	U1= 5.50E+05 cpm U2= 9.90E+05 cpm
	Steam Generator Blowdown Process	1R19A-D 2R19A-D	----	----	U1= 6.40E+05 cpm U2= 8.30E+05 cpm	U1= 6.40E+03 cpm U2= 8.30E+03 cpm
	Non-Rad Liquid Waste	2R37	----	----	3.60E+05 cpm	3.60E+03 cpm

* For high radiation conditions on Letdown Line Monitor 1R31A (2R31), refer to EAL SU7.1

Basis:

~~[*Refer to Appendix A for a detailed basis of the radiological effluent IC/EALs.*]~~

~~The Emergency Coordinator should not wait until the applicable time has elapsed, but should declare the event as soon as it is determined that the condition will likely exceed the applicable time.~~

This ~~IC~~EAL addresses an actual or substantial potential decrease in the level of safety of the plant as indicated by a radiological release that exceeds regulatory commitments for an extended period of time.

Nuclear power plants incorporate features intended to control the release of radioactive effluents to the environment. Further, there are administrative controls established to prevent unintentional releases, or control and monitor intentional releases. ~~[*These controls are located in the Off-site Dose Calculation Manual (ODCM), and for plants that have not implemented Generic Letter 89-01, in the Radiological Effluent Technical Specifications (RETS).*]~~ The occurrence of extended, uncontrolled radioactive releases to the environment is indicative of a degradation in these features and/or controls.

~~[*Some sites may find it advantageous to address gaseous and liquid releases with separate EALs.*]~~

The threshold values that equates to a ~~RETS~~ multiple of two hundred times the ODCM limits ~~are~~ is specified in ~~AU1~~ RU1 ~~and AA1~~ EAL RA1.1 only to distinguish between non-emergency conditions~~, and from each other~~. While ~~these~~ this multiples obviously corresponds to an off-

site dose or dose rate, the emphasis in classifying ~~these~~ this events is the degradation in the level of safety of the plant, not the magnitude of the associated dose or dose rate.

~~[To ensure a realistic near-linear escalation path, a value should be selected roughly half-way between the AU1 value and the value calculated for AS1 value. The value will be based on radiation monitor readings to exceed 200 times the Technical Specification limit and releases are not terminated within 15 minutes. The ODCM establishes a methodology for determining effluent radiation monitor setpoints. The ODCM specifies default source terms and, for gaseous releases, prescribes the use of pre-determined annual average meteorology in the most limiting downwind sector for showing compliance with the regulatory commitments. This EAL can be determined using this methodology if appropriate.]~~

~~[Releases should not be prorated or averaged. For example, a release exceeding 600x ODCM for 5 minutes does not meet the threshold.]~~

~~This EAL includes any release for which a radioactivity discharge permit was not prepared, or a release that exceeds the conditions (e.g., minimum dilution flow, maximum discharge flow, alarm setpoints, etc.) on the applicable permit.~~

~~EAL #1~~

This EAL is intended for sites that have established effluent monitoring on non-routine release pathways for which a discharge permit would not normally be prepared.

~~EAL #2~~

~~This EAL addresses radioactivity releases, that for whatever reason, cause effluent radiation monitor readings to exceed the threshold identified in the IC established by the radioactivity discharge permit. This value may be associated with a planned batch release, or a continuous release path.~~

~~[In either case, the value is established by the ODCM to warn of a release that is not in compliance with the RETS. Indexing the EAL to the ODCM setpoints in this manner insures that the EAL will never be less than the setpoint established by a specific discharge permit.]~~

~~EAL #3~~

~~This EAL addresses uncontrolled releases that are detected by sample analyses, particularly on unmonitored pathways, e.g., spills of radioactive liquids into storm drains, heat exchanger leakage in river water systems, etc.~~

~~EALs #4 and #5~~

~~The 10.0 mR/hr value in EAL #4 , and the site specific value for EAL #5,is based on a release rate not exceeding 500 mrem per year.~~

~~[*As provided in the ODCM / RETS, prorated over 8766 hours, multiplied by 200, and rounded. (500 ÷ 8766 × 200 = 11.4)*].~~

~~EAL #1 and #2 directly correlate with the IC since annual average meteorology is required to be used in showing compliance with the ODCM and is used in calculating the alarm setpoints. EALs #4 and #5 are a function of actual meteorology, which will likely be different from the limiting annual average value. Thus, there will likely be a numerical inconsistency.~~

~~The underlying basis of this EAL involves the degradation in the level of safety of the plant implied by the uncontrolled release. Exceeding EAL #4 or #5 is an indication of an uncontrolled release.~~**Explanation/Discussion/Definitions:**

The column "ALERT" gaseous release value in Table R-1 (Unit 1 + Unit 2) represents two hundred times the associated effluent monitor alarm setpoint. This setpoint is set to preclude exceeding the ODCM release rate limits associated with the specified monitor.

The plant vent monitors (R41) sample and detect noble gases and collect samples of particulates and iodine discharge through the plant vent. Channel D (R41D) provides the gaseous effluent release rate (µCi/sec) by combining (product of) the on-range R41A through R41C with plant vent flow (cc/sec).

Definitions:

> **VALID**: An indication, report, or condition, is considered to be **VALID** when it is verified by (1) an instrument channel check, or (2) indications on related or redundant indicators, or (3) by direct observation by plant personnel, such that doubt related to the indicator's operability, the condition's existence, or the report's accuracy is removed. Implicit in this definition is the need for timely assessment.

EAL Basis Reference(s):

1. NEI 99-01 Rev. 5, AA1 Example EAL #1
2. Salem Radiological EAL Setpoint Calculation Document NEI 99-01 Rev. 5 EALs (Attachment 6)
3. UFSAR Section 11.4 Radiological Monitoring
4. PSBP 315733(4) Radiation Monitoring System Control Manual

This page intentionally blank

EAL Category: R – Abnormal Rad Levels / Rad Effluent

EAL Subcategory: 1 – Offsite Rad Conditions

Initiating Condition: Any release of gaseous or liquid radioactivity to the environment greater than 200 times the ODCM for 15 minutes or longer

EAL# & Classification Level: **RA1.2 – ALERT**

Mode Applicability: All

EAL:

ANY VALID liquid monitor reading **> Table R-1** column "ALERT"

AND

≥ 15 minutes have elapsed (Note 2)

Note 2: The Emergency Coordinator should NOT wait until the applicable time has elapsed, but should declare the event as soon as it is determined that the release duration has exceeded, or will likely exceed, the applicable time. In the absence of data to the contrary, assume that the release duration has exceeded the applicable time if an ongoing release is detected and the release start time is unknown.

Table R-1 Effluent Monitor Classification Thresholds*						
	Release Point	**Monitor**	GE	SAE	ALERT	UE
Gaseous	Plant Vent Effluent Noble Gas Unit 1 + Unit 2	1R41D + 2R41D **OR** SPDS combined release rate	8.48E+09 µCi/sec	8.48E+08 µCi/sec	4.84E+07 µCi/sec	4.84E+05 µCi/sec
Liquid	Containment Fan Coil Process	1(2)R13A/B	----	----	1.64E+05 cpm	1.64E+03 cpm
	Liquid Radwaste Disposal Process	1R18 2R18	----	----	N/A ***See EAL RA1.3***	U1= 5.50E+05 cpm U2= 9.90E+05 cpm
	Steam Generator Blowdown Process	1R19A-D 2R19A-D	----	----	U1= 6.40E+05 cpm U2= 8.30E+05 cpm	U1= 6.40E+03 cpm U2= 8.30E+03 cpm
	Non-Rad Liquid Waste	2R37	----	----	3.60E+05 cpm	3.60E+03 cpm

* For high radiation conditions on Letdown Line Monitor 1R31A (2R31), refer to EAL SU7.1

Basis:

~~[*Refer to Appendix A for a detailed basis of the radiological effluent IC/EALs.*]~~

~~The Emergency Coordinator should not wait until the applicable time has elapsed, but should declare the event as soon as it is determined that the condition will likely exceed the applicable time.~~

This ~~IC~~EAL addresses an actual or substantial potential decrease in the level of safety of the plant as indicated by a radiological release that exceeds regulatory commitments for an extended period of time.

Nuclear power plants incorporate features intended to control the release of radioactive effluents to the environment. Further, there are administrative controls established to prevent unintentional releases, or control and monitor intentional releases. ~~[*These controls are located in the Off-site Dose Calculation Manual (ODCM), and for plants that have not implemented Generic Letter 89-01, in the Radiological Effluent Technical Specifications (RETS).*]~~ The occurrence of extended, uncontrolled radioactive releases to the environment is indicative of a degradation in these features and/or controls.

~~[*Some sites may find it advantageous to address gaseous and liquid releases with separate EALs.*]~~

The threshold values that equate to a ~~RETS~~ multiple of two hundred times the ODCM limits ~~are i~~sare specified in ~~AU1 RU1 and~~AA1 EAL RA1.2 only to distinguish between non-emergency conditions~~, and from each other~~. While ~~these~~ this multiples obviously corresponds

to an off-site dose or dose rate, the emphasis in classifying ~~these~~ this events is the degradation in the level of safety of the plant, not the magnitude of the associated dose or dose rate.

~~[To ensure a realistic near-linear escalation path, a value should be selected roughly half-way between the AU1 value and the value calculated for AS1 value. The value will be based on radiation monitor readings to exceed 200 times the Technical Specification limit and releases are not terminated within 15 minutes. The ODCM establishes a methodology for determining effluent radiation monitor setpoints. The ODCM specifies default source terms and, for gaseous releases, prescribes the use of pre-determined annual average meteorology in the most limiting downwind sector for showing compliance with the regulatory commitments. This EAL can be determined using this methodology if appropriate.]~~

~~[Releases should not be prorated or averaged. For example, a release exceeding 600x ODCM for 5 minutes does not meet the threshold.]~~

This EAL includes any release for which a radioactivity discharge permit was not prepared, or a release that exceeds the conditions (e.g., minimum dilution flow, maximum discharge flow, alarm setpoints, etc.) on the applicable permit.

~~EAL #1~~

This EAL is intended for sites that have established effluent monitoring on non-routine release pathways for which a discharge permit would not normally be prepared (Containment Fan Coil, SG Blowdown & Chemical Waste Basin) as well as planned batch releases for which a radioactivity discharge permit is prepared (Liquid Radwaste Disposal).

~~EAL #2~~

~~This EAL addresses radioactivity releases, that for whatever reason, cause effluent radiation monitor readings to exceed the threshold identified in the IC established by the radioactivity discharge permit. This value may be associated with a planned batch release, or a continuous release path.~~

~~[In either case, the value is established by the ODCM to warn of a release that is not in compliance with the RETS. Indexing the EAL to the ODCM setpoints in this manner insures that the EAL will never be less than the setpoint established by a specific discharge permit.]~~

~~EAL #3~~

~~This EAL addresses uncontrolled releases that are detected by sample analyses, particularly on unmonitored pathways, e.g., spills of radioactive liquids into storm drains, heat exchanger leakage in river water systems, etc.~~

~~EALs #4 and #5~~

~~The 10.0 mR/hr value in EAL #4 , and the site specific value for EAL #5,is based on a release rate not exceeding 500 mrem per year.~~

~~[*As provided in the ODCM / RETS, prorated over 8766 hours, multiplied by 200, and rounded. (500 ÷ 8766 × 200 = 11.4)*].~~

~~EAL #1 and #2 directly correlate with the IC since annual average meteorology is required to be used in showing compliance with the ODCM and is used in calculating the alarm setpoints. EALs #4 and #5 are a function of actual meteorology, which will likely be different from the limiting annual average value. Thus, there will likely be a numerical inconsistency.~~

~~The underlying basis of this EAL involves the degradation in the level of safety of the plant implied by the uncontrolled release. Exceeding EAL #4 or #5 is an indication of an uncontrolled release.~~**Explanation/Discussion/Definitions:**

With the exception of the R18 monitors, the "ALERT" column liquid release values in Table R-1 represent two hundred (200) times the High Alarm setpoints associated with the specified monitors. The High Alarm setpoints are obtained from channel calibrations procedures as listed in the reference section of this bases.

Instrumentation that may be used to assess this EAL is listed below:

- Containment Fan Coil Process 1(2)R13A/B (Upper Range is 1.00E+06 cpm)

  Service water is used as the cooling medium for the containment fan coil units (CFCUs) and could be contaminated if the cooling coil leaks with containment pressure above Service Water pressure. Since the Service Water System discharges into Circ Water and then back to the river, the fan cooler units will be indirectly monitored for radioactivity. This is done through the use of two monitors for the five fan coolers. The two monitors sample two of the three Circ Water headers that contain Service Water used to cool the CFCUs just before it discharges back to the river. Alarms on these monitors would be indicative of a CFCU leak but could also be associated with other systems including from the pathways monitored by the R18s, R19s and the R37, which also discharge into Circ Water and are monitored by the 1(2)R13A/B. If simultaneous Rad Alarms are received on an R13 monitor along with any R18s, R19s or R37 monitor, then the source of the Rad effluent may not be a CFCU leak and further investigation would be warranted. However, exceeding the EAL threshold value for ≥ 15 minutes should result in an Alert classification even if the exact source remains questionable.

- Liquid Radwaste Disposal Process 1(2)R18 (Upper Range is 1.00E+06 cpm)

  Since the ranges of the 1(2) R18s monitors do not support EAL threshold values of 200 times the high alarm value, no Alert threshold is provided on Table R-1. If the release

pathway could not be isolated as expected, the EC should refer to EAL RA1.3 for Alert threshold values based on sample analysis.

This channel continuously monitors all Waste Disposal System liquid releases from the plant. Automatic valve closure action is initiated by this monitor when a high radiation level is indicated and alarmed in the Control Room. Liquid Radwaste discharges to Circ Water which then discharges to the Delaware River.

- Steam Generator Blowdown Process 1(2)R19A-D (Upper Range is 1.00E+06 cpm)

  Each of these channels (four channels per unit) monitors the liquid phase of the steam generators for radioactivity, which would indicate a primary-to-secondary system leak. The four steam generator blowdown sample lines each have a radiation monitor. A high radiation alarm signal will close the No. 12 (22) steam generator blowdown tank inlet valves and the steam generator blowdown isolation valves on the affected steam generator.

- Non-Rad Liquid Waste 2R37 (Upper Range is 1.00E+06 cpm)

  The non-radwaste basin provides a potential release path due to the fact that steam generator blowdown is directed to the basin during plant startup. This monitor provides for continuous monitoring of the discharge from the non-radwaste basin. Non-Rad Liquid Waste discharges to Circ Water which then discharges to the Delaware River.

Definitions:

VALID: An indication, report, or condition, is considered to be **VALID** when it is verified by (1) an instrument channel check, or (2) indications on related or redundant indicators, or (3) by direct observation by plant personnel, such that doubt related to the indicator's operability, the condition's existence, or the report's accuracy is removed. Implicit in this definition is the need for timely assessment.

EAL Basis Reference(s):

1. NEI 99-01 Rev. 5, AA1 Example EAL #2
2. Salem ODCM Section 3.3.8 – Radioactive Liquid Effluent Monitoring Instrumentation
3. Salem ODCM Figures 1-1 and 1-2, Liquid Release Flow paths for Unit 1 and Unit 2
4. UFSAR Section 11.4 Radiation Monitoring
5. PSBP 315733(4) Radiation Monitoring System Control Manual
6. S1(S2).IC-CC.RM-0097/98, Channel Cal for 1/2R13A/B
7. S1(S2).IC-CC.RM-0028, Channel Cal for 1/2R18
8. S1(S2).IC-CC.RM-0029/30/31/32, Channel Cal for 1/2R19A/B/C/D
9. S2.IC-CC.RM-0060, Channel Cal for 2R37

EAL Category: R – Abnormal Rad Levels / Rad Effluent

EAL Subcategory: 1 – Offsite Rad Conditions

Initiating Condition: Any release of gaseous or liquid radioactivity to the environment greater than 200 times the ODCM for 15 minutes or longer

EAL# & Classification Level: **RA1.3 – ALERT**

Mode Applicability: All

EAL:

Confirmed sample analyses for gaseous or liquid releases indicate concentrations or release rates **> Table R-2** column "ALERT"

AND

≥ 15 minutes have elapsed (Note 2)

Note 2: The Emergency Coordinator should NOT wait until the applicable time has elapsed, but should declare the event as soon as it is determined that the release duration has exceeded, or will likely exceed, the applicable time. In the absence of data to the contrary, assume that the release duration has exceeded the applicable time if an ongoing release is detected and the release start time is unknown.

Table R-2 Effluent Sample Classification Thresholds

	Release Point	Sample	ALERT	UE
Gaseous	Plant Vent	NG	6.40E-01 μCi/cc	6.40E-03 μCi/cc
		I-131	5.60E-05 μCi/cc	5.60E-07 μCi/cc
	Unmonitored	Isotopic	200 x ODCM 3/4.11.2	2 x ODCM 3/4.11.2
Liquid	Containment Fan Coil	Isotopic	200 x ODCM 3/4.11.1	2 x ODCM 3/4.11.1
	Liquid Radwaste Disposal	Isotopic	200 x ODCM 3/4.11.1	2 x ODCM 3/4.11.1
	Steam Generator Blowdown	Isotopic	200 x ODCM 3/4.11.1	2 x ODCM 3/4.11.1
	Chemical Waste Basin	Isotopic	200 x ODCM 3/4.11.1	2 x ODCM 3/4.11.1
	Unmonitored	Isotopic	200 x ODCM 3/4.11.1	2 x ODCM 3/4.11.1

Basis:

~~[*Refer to Appendix A for a detailed basis of the radiological effluent IC/EALs.*]~~

~~The Emergency Coordinator should not wait until the applicable time has elapsed, but should declare the event as soon as it is determined that the condition will likely exceed the applicable time.~~

This ~~IC~~EAL addresses an actual or substantial potential decrease in the level of safety of the plant as indicated by a radiological release that exceeds regulatory commitments for an extended period of time.

Nuclear power plants incorporate features intended to control the release of radioactive effluents to the environment. Further, there are administrative controls established to prevent unintentional releases, or control and monitor intentional releases. ~~[*These controls are located in the Off-site Dose Calculation Manual (ODCM), and for plants that have not implemented Generic Letter 89-01, in the Radiological Effluent Technical Specifications (RETS).*]~~ The occurrence of extended, uncontrolled radioactive releases to the environment is indicative of a degradation in these features and/or controls.

~~[*Some sites may find it advantageous to address gaseous and liquid releases with separate EALs.*]~~

The ~~RETS~~ multiple of two hundred times the ODCM limits ~~are~~ is specified in ~~AU1 and AA1~~EAL RU1.3 only to distinguish between non-emergency conditions~~, and from each other~~. While ~~these~~ this multiples obviously corresponds to an off-site dose or dose rate, the emphasis in classifying ~~these~~ this events is the degradation in the level of safety of the plant, not the magnitude of the associated dose or dose rate.

~~[*To ensure a realistic near-linear escalation path, a value should be selected roughly half-way between the AU1 value and the value calculated for AS1 value. The value will be based on radiation monitor readings to exceed 200 times the Technical Specification limit and releases are not terminated within 15 minutes.* The *ODCM establishes a methodology for determining effluent radiation monitor setpoints. The ODCM specifies default source terms and, for gaseous releases, prescribes the use of pre-determined annual average meteorology in the most limiting downwind sector for showing compliance with the regulatory commitments. This EAL can be determined using this methodology if appropriate.*]~~

~~[*Releases should not be prorated or averaged. For example, a release exceeding 600x ODCM for 5 minutes does not meet the threshold.*]~~

~~This EAL includes any release for which a radioactivity discharge permit was not prepared, or a release that exceeds the conditions (e.g., minimum dilution flow, maximum discharge flow, alarm setpoints, etc.) on the applicable permit.~~

~~EAL #1~~

~~This EAL is intended for sites that have established effluent monitoring on non-routine release pathways for which a discharge permit would not normally be prepared.~~EAL #2

~~This EAL addresses radioactivity releases, that for whatever reason, cause effluent radiation monitor readings to exceed the threshold identified in the IC established by the radioactivity discharge permit. This value may be associated with a planned batch release, or a continuous release path.~~

~~[*In either case, the value is established by the ODCM to warn of a release that is not in compliance with the RETS. Indexing the EAL to the ODCM setpoints in this manner insures that the EAL will never be less than the setpoint established by a specific discharge permit.*]~~

~~EAL #3~~

This EAL addresses uncontrolled releases that are detected by sample analyses, particularly on unmonitored pathways, e.g., spills of radioactive liquids into storm drains, heat exchanger leakage in river water systems, etc.

~~EALs #4 and #5~~

~~The 10.0 mR/hr value in EAL #4 , and the site specific value for EAL #5,is based on a release rate not exceeding 500 mrem per year.~~

~~[*As provided in the ODCM / RETS, prorated over 8766 hours, multiplied by 200, and rounded. (500 ÷ 8766 × 200 = 11.4)*].~~

~~EAL #1 and #2 directly correlate with the IC since annual average meteorology is required to be used in showing compliance with the ODCM and is used in calculating the alarm setpoints. EALs #4 and #5 are a function of actual meteorology, which will likely be different from the limiting annual average value. Thus, there will likely be a numerical inconsistency.~~

Explanation/Discussion/Definitions:

Confirmed sample analyses in excess of two hundred times the site Offsite Dose Calculation Manual Section 3/4.11.1 or 3/4.11.2 limits that continue for 15 minutes or longer represent an uncontrolled situation and hence, a potential degradation in the level of safety. This event escalates from the UNUSUAL EVENT by raising the magnitude of the release by a factor of 100 over the UNUSUAL EVENT level (i.e., 200 times ODCM).

Table R-2 provides calculated radiological release noble gas and iodine sample concentrations that equate to a release that is 200 times the ODCM limit (Section 3/4.11.2) of 500 mRem/year as well as specifying liquid release effluent sample streams 200 times the ODCM limits (Section 3.11.1).

Each Salem unit has a single gaseous release point (Plant Vent) for which a sample concentration threshold has been calculated.

The required release duration was reduced to 15 minutes in recognition of the raised severity.

EAL Basis Reference(s):

1. NEI 99-01 Rev. 5, AA1 Example EAL #3
2. Off-Site Dose Calculation Manual, Section 3/4.11.1 – Liquid Effluents
3. Off-Site Dose Calculation Manual, Section 3/4.11.2 – Gaseous Effluents
4. Salem Radiological EAL Setpoint Calculation Document NEI 99-01 Rev. 5 EALs (Attachment 6)

This page intentionally blank

EAL Category: R – Abnormal Rad Levels / Rad Effluent

EAL Subcategory: 1 – Offsite Rad Conditions

Initiating Condition: Off-site dose resulting from an actual or **IMMINENT** release of gaseous radioactivity greater than 100 mRem TEDE or 500 mRem Thyroid CDE for the actual or projected duration of the release

Mode Applicability: All

EAL# & Classification Level: **RS1.1 – SITE AREA EMERGENCY**

EAL:

VALID gaseous monitor reading **> Table R-1** column "SAE"

AND

Dose assessment results are NOT available

AND

≥ 15 minutes have elapsed (Note 1)

Note 1: If dose assessment results are available, declaration should be based on dose assessment (EAL RS1.2) instead of gaseous monitor values. Do NOT delay declaration awaiting dose assessment results.

The Emergency Coordinator should NOT wait until the applicable time has elapsed, but should declare the event as soon as it is determined that the condition will likely exceed the applicable time.

Table R-1 Effluent Monitor Classification Thresholds*

	Release Point	Monitor	GE	SAE	ALERT	UE
Gaseous	Plant Vent Effluent Noble Gas Unit 1 + Unit 2	1R41D + 2R41D **OR** SPDS combined release rate	8.48E+09 µCi/sec	8.48E+08 µCi/sec	4.84E+07 µCi/sec	4.84E+05 µCi/sec
Liquid	Containment Fan Coil Process	1(2)R13A/B	----	----	1.64E+05 cpm	1.64E+03 cpm
	Liquid Radwaste Disposal Process	1R18 2R18	----	----	N/A ***See EAL RA1.3***	U1= 5.50E+05 cpm U2= 9.90E+05 cpm
	Steam Generator Blowdown Process	1R19A-D 2R19A-D	----	----	U1= 6.40E+05 cpm U2= 8.30E+05 cpm	U1= 6.40E+03 cpm U2= 8.30E+03 cpm
	Non-Rad Liquid Waste	2R37	----	----	3.60E+05 cpm	3.60E+03 cpm

* For high radiation conditions on Letdown Line Monitor 1R31A (2R31), refer to EAL SU7.1

Basis:

~~[*Refer to Appendix A for a detailed basis of the radiological effluent IC/EALs.*]~~

This ~~IC~~ EAL addresses radioactivity releases that result in doses at or beyond the site boundary that exceed 10% of the EPA Protective Action Guides (PAGs). Releases of this magnitude are associated with the failure of plant systems needed for the protection of the public.

[While these failures are addressed by other ~~ICs~~EALs, this ~~IC~~ EAL provides appropriate diversity and addresses events which may not be able to be classified on the basis of plant status alone. It is important to note that for the more severe accidents the release may be unmonitored or there may be large uncertainties associated with the source term and/or meteorology.]

~~[*The EPA PAGs are expressed in terms of the sum of the effective dose equivalent (EDE) and the committed effective dose equivalent (CEDE), or as the thyroid committed dose equivalent (CDE). For the purpose of these IC/EALs, the dose quantity total effective dose equivalent (TEDE), as defined in 10 CFR 20, is used in lieu of "…sum of EDE and CEDE…." The EPA PAG guidance provides for the use adult thyroid dose conversion factors. However, some states have decided to calculate child thyroid CDE. Utility IC/EALs need to be consistent with those of the states involved in the facility's emergency planning zone.*]~~

~~[~~The TEDE dose which forms the bases for the specified effluent monitor threshold is set at 10% of the EPA PAG~~, while the 500 mrem thyroid CDE was established in consideration of the 1:5 ratio of the EPA PAG for TEDE and thyroid CDE.~~]

~~EAL #1~~

The ~~site specific~~Table R-1 monitor list ~~in EAL #1 should~~ includes effluent monitors on all potential release pathways.

~~[*The monitor reading EALs should be determined using a dose assessment method that back calculates from the dose values specified in the IC. Since doses are generally not monitored in real-time, it is suggested that a release duration of one hour be assumed, and that the EALs be based on a site-specific boundary (or beyond) dose of 100 mrem whole body or 500 mrem thyroid in one hour, whichever is more limiting (as was done for EALs #2 and #4). If individual site analyses indicate a longer or shorter duration for the period in which the substantial portion of the activity is released, the longer duration should be used.*]~~

~~[*The meteorology used should be the same as those used for determining AU1 and AA1 monitor reading EALs. The same source term (noble gases, particulates, and halogens) may also be used as long as it maintains a realistic and near linear escalation between the EALs for the four classifications. If proper escalations do not result from the use of the same source term, if the calculated values are unrealistically high, or if correlation between the values and dose assessment values does not exist, then consider using an accident source term for AS1 and AG1 calculations.*]~~

Since dose assessment is based on actual meteorology, whereas the monitor reading EAL is not, the results from these assessments may indicate that the classification is not warranted, or may indicate that a higher classification is warranted. For this reason, emergency implementing procedures ~~should~~ call for the timely performance of dose assessments using actual meteorology and release information. If the results of these dose assessments are available when the classification is made (e.g., initiated at a lower classification level), the dose assessment results override the monitor reading EAL.

Explanation/Discussion/Definitions:

This EAL address gaseous radioactivity releases, that for whatever reason, cause effluent radiation monitor readings corresponding to site boundary doses that exceed 100 mRem TEDE.

The column "SAE" gaseous effluent release values in Table R-1 (Unit 1 + Unit 2) correspond to calculated doses of 10% of the EPA Protective Action Guidelines (TEDE).

The plant vent monitors (R41) sample and detect noble gases and collect samples of particulates and iodine discharge through the plant vent. Channel D (R41D) provides the gaseous effluent release rate (µCi/sec) by combining (product of) the on-range R41A through R41C with plant vent flow (cc/sec).

If dose assessment results are available, EAL RS1.2 would dictate the need for a Site Area Emergency classification due to abnormal radiation effluents.

Definitions:

> **IMMINENT**: Mitigation actions have been ineffective, additional actions are not expected to be successful, and trended information indicates that the event or condition will occur within approximately 2 hours (unless a different time is specified).
>
> **VALID**: An indication, report, or condition, is considered to be **VALID** when it is verified by (1) an instrument channel check, or (2) indications on related or redundant indicators, or (3) by direct observation by plant personnel, such that doubt related to the indicator's operability, the condition's existence, or the report's accuracy is removed. Implicit in this definition is the need for timely assessment.

EAL Basis Reference(s):

1. NEI 99-01 Rev. 5, AS1 Example EAL #1
2. Salem Radiological EAL Setpoint Calculation Document NEI 99-01 Rev. 5 EALs (Attachment 6)
3. UFSAR Section 11.4 Radiological Monitoring
4. PSBP 315733(4) Radiation Monitoring System Control Manual

This page intentionally blank

EAL Category: R – Abnormal Rad Levels / Rad Effluent

EAL Subcategory: 1 – Offsite Rad Conditions

Initiating Condition: Off-site dose resulting from an actual or **IMMINENT** release of gaseous radioactivity greater than 100 mRem TEDE or 500 mRem Thyroid CDE for the actual or projected duration of the release

EAL# & Classification Level: **RS1.2 – SITE AREA EMERGENCY**

Mode Applicability: All

EAL:

Dose assessment using actual meteorology indicates TEDE 4-day dose **> 4.0E+02 mRem** or Thyroid CDE dose **> 2.0E+03 mRem** at or beyond the **MINIMUM EXCLUSION AREA (MEA)**

Basis:

~~[*Refer to Appendix A for a detailed basis of the radiological effluent IC/EALs.*]~~

This ~~IC~~ EAL addresses radioactivity releases that result in doses at or beyond the **MINIMUM EXCLUSION AREA (MEA)**~~site boundary~~ that exceed 10% of the EPA Protective Action Guides (PAGs). Releases of this magnitude are associated with the failure of plant systems needed for the protection of the public.

[While these failures are addressed by other ~~ICs~~EALs, this ~~IC~~ EAL provides appropriate diversity and addresses events which may not be able to be classified on the basis of plant status alone. It is important to note that for the more severe accidents the release may be unmonitored or there may be large uncertainties associated with the source term and/or meteorology.]

~~[*The EPA PAGs are expressed in terms of the sum of the effective dose equivalent (EDE) and the committed effective dose equivalent (CEDE), or as the thyroid committed dose equivalent (CDE). For the purpose of these IC/EALs, the dose quantity total effective dose equivalent (TEDE), as defined in 10 CFR 20, is used in lieu of "…sum of EDE and CEDE…." The EPA PAG guidance provides for the use adult thyroid dose conversion factors. However, some states have decided to calculate child thyroid CDE. Utility IC/EALs need to be consistent with those of the states involved in the facility's emergency planning zone.*]~~

[The TEDE dose is set at 10% of the EPA PAG, while the 500 mrem thyroid CDE was established in consideration of the 1:5 ratio of the EPA PAG for TEDE and thyroid CDE.]

~~EAL #1~~

~~The site specific monitor list in EAL #1 should include effluent monitors on all potential release pathways.~~

~~[*The monitor reading EALs should be determined using a dose assessment method that back calculates from the dose values specified in the IC. Since doses are generally not monitored in real-time, it is suggested that a release duration of one hour be assumed, and that the EALs be based on a site specific boundary (or beyond) dose of 100 mrem whole body or 500 mrem thyroid in one hour, whichever is more limiting (as was done for EALs #2 and #4). If individual site analyses indicate a longer or shorter duration for the period in which the substantial portion of the activity is released, the longer duration should be used.*]~~

~~[*The meteorology used should be the same as those used for determining AU1 and AA1 monitor reading EALs. The same source term (noble gases, particulates, and halogens) may also be used as long as it maintains a realistic and near linear escalation between the EALs for the four classifications. If proper escalations do not result from the use of the same source term, if the calculated values are unrealistically high, or if correlation between the values and dose assessment values does not exist, then consider using an accident source term for AS1 and AG1 calculations.*]~~

Since dose assessment is based on actual meteorology, whereas the monitor reading EAL is not, the results from these assessments may indicate that the classification is not warranted, or may indicate that a higher classification is warranted. For this reason, emergency implementing procedures ~~should~~ call for the timely performance of dose assessments using actual meteorology and release information. If the results of these dose assessments are available when the classification is made (e.g., initiated at a lower classification level), the dose assessment results override the monitor reading EAL.

Explanation/Discussion/Definitions:

The dose assessment output on the Station Status Checklist (SSCL) is reported at varying distances from the plant as a TEDE 4-Day dose. This TEDE 4-day dose assumes a 4 hr release duration. To obtain the approximate dose for a projected release condition of 1 hour, the TEDE 4-day dose value would need to be divided by 4.

A TEDE 4-Day Dose > 4.0E+02 mRem correspond directly to a TEDE dose rate value of 100 mRem/hr and exceeds 10% of the EPA Protective Actions Guides (PAGs). The Thyroid-CDE Dose > 2.0E+03 mRem correspond directly to an CDE dose rate value of 500 mRem/hr and exceeds 10% of the EPA Protective Actions Guides (PAGs) which was established in consideration of the 1:5 ratio of the EPA PAG for TEDE and thyroid CDE.

For the purposes of this EAL, the Site Boundary for SGS is the **MINIMUM EXCLUSION AREA**.

Definitions:

> **IMMINENT**: Mitigation actions have been ineffective, additional actions are not expected to be successful, and trended information indicates that the event or condition will occur within approximately 2 hours (unless a different time is specified).
>
> **MINIMUM EXCLUSION AREA (MEA)**: The closest location just beyond the **OWNER CONTROLLED AREA** where a member of the general public could gain access. For Salem the **MEA** is 0.79 miles.
>
> **OWNER CONTROLLED AREA (OCA)**: Property owned, maintained and controlled by PSEG Nuclear as part of the Salem & Hope Creek Generating Station complex. For the purpose of emergency classification, area from the PSEG Nuclear access road checkpoint and inward towards the stations is considered the **OCA**.

EAL Basis Reference(s):

1. NEI 99-01 Rev. 5, AS1 Example EAL #2
2. Salem Radiological EAL Setpoint Calculation Document NEI 99-01 Rev. 5 EALs (Attachment 6)
3. UFSAR 2.1.2.2, Boundaries for Establishing Effluent Release Limits

EAL Category: R – Abnormal Rad Levels / Rad Effluent

EAL Subcategory: 1 – Offsite Rad Conditions

Initiating Condition: Off-site dose resulting from an actual or **IMMINENT** release of gaseous radioactivity greater than 100 mRem TEDE or 500 mRem Thyroid CDE for the actual or projected duration of the release

EAL# & Classification Level: **RS1.3 – SITE AREA EMERGENCY**

Mode Applicability: All

EAL:

Field survey results indicate closed window dose rates **> 100 mRem/hr** expected to continue for **≥ 1** hr at or beyond the **PROTECTED AREA BOUNDARY**

OR

Analyses of field survey samples indicate I-131 concentration **> 3.85E-07 μCi/cc** at or beyond the **PROTECTED AREA BOUNDARY**

Basis:

~~[*Refer to Appendix A for a detailed basis of the radiological effluent IC/EALs.*]~~

This ~~IC~~ EAL addresses radioactivity releases that result in doses at or beyond the **PROTECTED AREA BOUNDARY** ~~site boundary~~ that exceed 10% of the EPA Protective Action Guides (PAGs). Releases of this magnitude are associated with the failure of plant systems needed for the protection of the public.

[While these failures are addressed by other ~~ICs~~EALs, this ~~IC~~ EAL provides appropriate diversity and addresses events which may not be able to be classified on the basis of plant status alone. It is important to note that for the more severe accidents the release may be unmonitored or there may be large uncertainties associated with the source term and/or meteorology.]

~~[*The EPA PAGs are expressed in terms of the sum of the effective dose equivalent (EDE) and the committed effective dose equivalent (CEDE), or as the thyroid committed dose equivalent (CDE). For the purpose of these IC/EALs, the dose quantity total effective dose equivalent (TEDE), as defined in 10 CFR 20, is used in lieu of "…sum of EDE and CEDE…." The EPA PAG guidance provides for the use adult thyroid dose conversion factors. However, some states have decided to calculate child thyroid CDE. Utility IC/EALs need to be consistent with those of the states involved in the facility's emergency planning zone.*]~~

~~[~~The TEDE dose is set at 10% of the EPA PAG, while the 500 mrem thyroid CDE was established in consideration of the 1:5 ratio of the EPA PAG for TEDE and thyroid CDE.~~]~~

~~EAL #1~~

~~The site specific monitor list in EAL #1 should include effluent monitors on all potential release pathways.~~

~~[*The monitor reading EALs should be determined using a dose assessment method that back calculates from the dose values specified in the IC. Since doses are generally not monitored in real-time, it is suggested that a release duration of one hour be assumed, and that the EALs be based on a site specific boundary (or beyond) dose of 100 mrem whole body or 500 mrem thyroid in one hour, whichever is more limiting (as was done for EALs #2 and #4). If individual site analyses indicate a longer or shorter duration for the period in which the substantial portion of the activity is released, the longer duration should be used.*]~~

~~[*The meteorology used should be the same as those used for determining AU1 and AA1 monitor reading EALs. The same source term (noble gases, particulates, and halogens) may also be used as long as it maintains a realistic and near linear escalation between the EALs for the four classifications. If proper escalations do not result from the use of the same source term, if the calculated values are unrealistically high, or if correlation between the values and dose assessment values does not exist, then consider using an accident source term for AS1 and AG1 calculations.*]~~

Explanation/Discussion/Definitions:

This EAL addresses a radioactivity release field survey I-131 sample concentration or count rate that would result in a Thyroid CDE dose of greater than 500 mRem for one hour of inhalation at or beyond the **PROTECTED AREA BOUNDARY**. This value exceeds 10% of the EPA Protective Action Guides (PAGs). Releases of this magnitude are associated with the failure of plant systems needed for the protection of the public.

The Iodine-131 field survey sample concentration and count rate threshold is based on I-131 dose conversion factors (DCFs) from EPA-400. The thresholds are based on a Thyroid-CDE Dose Rate of 500 mRem/hr for I-131.

For the purposes of this EAL, the **PROTECTED AREA BOUNDARY** is used as it is an easily determined location to obtain a field survey dose rate reading or to obtain a field sample.

Definitions:

> **IMMINENT**: Mitigation actions have been ineffective, additional actions are not expected to be successful, and trended information indicates that the event or condition will occur within approximately 2 hours (unless a different time is specified).

PROTECTED AREA (PA): A security controlled area within the **OWNER-CONTROLLED AREA (OCA)** that is enclosed by the security perimeter fence and monitored by intrusion detection systems. Access to the **PA** requires proper security clearance and is controlled at the Security Center.

OWNER CONTROLLED AREA (OCA): Property owned, maintained and controlled by PSEG Nuclear as part of the Salem & Hope Creek Generating Station complex. For the purpose of emergency classification, area from the PSEG Nuclear access road checkpoint and inward towards the stations is considered the **OCA**.

EAL Basis Reference(s):

1. NEI 99-01 Rev. 5, AS1 Example EAL #4
2. Off-Site Dose Calculation Manual, Figure 5.1-3, Area Plot Plan of Site
3. Salem Radiological EAL Setpoint Calculation Document NEI 99-01 Rev. 5 EALs (Attachment 6)

EAL Category: R – Abnormal Rad Levels / Rad Effluent

EAL Subcategory: 1 – Offsite Rad Conditions

Initiating Condition: Off-site dose resulting from an actual or **IMMINENT** release of gaseous radioactivity greater than 1000 mRem TEDE or 5000 mRem Thyroid CDE for the actual or projected duration of the release

Mode Applicability: All

EAL# & Classification Level: **RG1.1 – GENERAL EMERGENCY**

EAL:

VALID gaseous monitor reading **> Table R-1** column "GE"

AND

Dose assessment results are NOT available

AND

≥ 15 minutes have elapsed (Note 1)

Note 1: If dose assessment results are available, declaration should be based on dose assessment (EAL RG1.2) instead of gaseous monitor values. Do NOT delay declaration awaiting dose assessment results.

The Emergency Coordinator should NOT wait until the applicable time has elapsed, but should declare the event as soon as it is determined that the condition will likely exceed the applicable time.

Table R-1 Effluent Monitor Classification Thresholds*

	Release Point	Monitor	GE	SAE	ALERT	UE
Gaseous	Plant Vent Effluent Noble Gas Unit 1 + Unit 2	1R41D + 2R41D **OR** SPDS combined release rate	8.48E+09 µCi/sec	8.48E+08 µCi/sec	4.84E+07 µCi/sec	4.84E+05 µCi/sec
Liquid	Containment Fan Coil Process	1(2)R13A/B	----	----	1.64E+05 cpm	1.64E+03 cpm
Liquid	Liquid Radwaste Disposal Process	1R18 2R18	----	----	N/A ***See EAL RA1.3***	U1= 5.50E+05 cpm U2= 9.90E+05 cpm
Liquid	Steam Generator Blowdown Process	1R19A-D 2R19A-D	----	----	U1= 6.40E+05 cpm U2= 8.30E+05 cpm	U1= 6.40E+03 cpm U2= 8.30E+03 cpm
Liquid	Non-Rad Liquid Waste	2R37	----	----	3.60E+05 cpm	3.60E+03 cpm

* For high radiation conditions on Letdown Line Monitor 1R31A (2R31), refer to EAL SU7.1

Basis:

~~[*Refer to Appendix A for a detailed basis of the radiological effluent IC/EALs.*].~~

This ~~IC~~ EAL addresses radioactivity releases that result in doses at or beyond the site boundary that exceed the EPA Protective Action Guides (PAGs). Public protective actions will be necessary. Releases of this magnitude are associated with the failure of plant systems needed for the protection of the public and likely involve fuel damage.

[While these failures are addressed by other ~~ICs~~EALs, this ~~IC~~ EAL provides appropriate diversity and addresses events which may not be able to be classified on the basis of plant status alone. It is important to note that for the more severe accidents the release may be unmonitored or there may be large uncertainties associated with the source term and/or meteorology.]

~~[*The EPA PAGs are expressed in terms of the sum of the effective dose equivalent (EDE) and the committed effective dose equivalent (CEDE), or as the thyroid committed dose equivalent (CDE). For the purpose of these IC/EALs, the dose quantity total effective dose equivalent (TEDE), as defined in 10 CFR 20, is used in lieu of "…sum of EDE and CEDE…." The EPA PAG guidance provides for the use adult thyroid dose conversion factors. However, some states have decided to calculate child thyroid CDE. Utility IC/EALs need to be consistent with those of the states involved in the facilities emergency planning zone.*]~~

[The TEDE dose which forms the bases for the specified effluent monitor threshold is set at the EPA PAG~~, while the 5000 mrem thyroid CDE was established in consideration of the 1:5 ratio of the EPA PAG for TEDE and thyroid CDE~~.]

~~EAL #1~~

The ~~site specific~~Table R-1 monitor list ~~in EAL #1 should~~ includes effluent monitors on all potential release pathways.

~~[*The monitor reading EALs should be determined using a dose assessment method that back calculates from the dose values specified in the IC. Since doses are generally not monitored in real-time, it is suggested that a release duration of one hour be assumed, and that the EALs be based on a site specific boundary (or beyond) dose of 1000 mrem whole body or 5000 mrem thyroid in one hour, whichever is more limiting (as was done for EALs #2 and #4). If individual site analyses indicate a longer or shorter duration for the period in which the substantial portion of the activity is released, the longer duration should be used.*]~~

~~[*The meteorology used should be the same as those used for determining AU1 and AA1 monitor reading EALs. The same source term (noble gases, particulates, and halogens) may also be used as long as it maintains a realistic and near linear escalation between the EALs for the four classifications. If proper escalations do not result from the use of the same source term, if the calculated values are unrealistically high, or if correlation between the values and dose assessment values does not exist, then consider using an accident source term for AS1 and AG1 calculations.*]~~

Since dose assessment is based on actual meteorology, whereas the monitor reading EAL is not, the results from these assessments may indicate that the classification is not warranted~~, or may indicate that a higher classification is warranted~~. For this reason, emergency implementing procedures ~~should~~ call for the timely performance of dose assessments using actual meteorology and release information. If the results of these dose assessments are available when the classification is made (e.g., initiated at a lower classification level), the dose assessment results override the monitor reading EAL.

Explanation/Discussion/Definitions:

This EAL address gaseous radioactivity releases, that for whatever reason, cause effluent radiation monitor readings corresponding to site boundary doses that exceed 1000 mRem TEDE.

The column GE gaseous effluent release values in Table R-1 (Unit 1 + Unit 2) correspond to calculated doses of 100% of the EPA Protective Action Guidelines (TEDE).

The plant vent monitors (R41) sample and detect noble gases and collect samples of particulates and iodine discharge through the plant vent. Channel D (R41D) provides the gaseous effluent release rate (µCi/sec) by combining (product of) the on-range R41A through R41C with plant vent flow (cc/sec).

If dose assessment results are available, EAL RG1.2 would dictate the need for a General Emergency classification due to abnormal radiation effluents.

Definitions:

> **IMMINENT**: Mitigation actions have been ineffective, additional actions are not expected to be successful, and trended information indicates that the event or condition will occur within approximately 2 hours (unless a different time is specified).
>
> **VALID**: An indication, report, or condition, is considered to be **VALID** when it is verified by (1) an instrument channel check, or (2) indications on related or redundant indicators, or (3) by direct observation by plant personnel, such that doubt related to the indicator's operability, the condition's existence, or the report's accuracy is removed. Implicit in this definition is the need for timely assessment.

EAL Basis Reference(s):

1. NEI 99-01 Rev. 5, AG1 Example EAL #1
2. Salem Radiological EAL Setpoint Calculation Document NEI 99-01 Rev. 5 EALs (Attachment 6)
3. UFSAR Section 11.4 Radiological Monitoring
4. PSBP 315733(4) Radiation Monitoring System Control Manual

This page intentionally blank

EAL Category: R – Abnormal Rad Levels / Rad Effluent

EAL Subcategory: 1 – Offsite Rad Conditions

Initiating Condition: Off-site dose resulting from an actual or **IMMINENT** release of gaseous radioactivity greater than 1000 mRem TEDE or 5000 mRem Thyroid CDE for the actual or projected duration of the release

EAL# & Classification Level: **RG1.2 – GENERAL EMERGENCY**

Mode Applicability: All

EAL:

Dose assessment using actual meteorology indicates TEDE 4-day dose **> 4.0E+03 mRem** or Thyroid CDE dose **> 2.0E+04 mRem** at or beyond the **MINIMUM EXCLUSION AREA (MEA)**

Basis:

~~[*Refer to Appendix A for a detailed basis of the radiological effluent IC/EALs.*].~~

This ~~IC~~ EAL addresses radioactivity releases that result in doses at or beyond the **MINIMUM EXCLUSION AREA (MEA)** ~~site boundary~~ that exceed the EPA Protective Action Guides (PAGs). Public protective actions will be necessary. Releases of this magnitude are associated with the failure of plant systems needed for the protection of the public and likely involve fuel damage.

[While these failures are addressed by other ~~ICs~~EALs, this ~~IC~~ EAL provides appropriate diversity and addresses events which may not be able to be classified on the basis of plant status alone. It is important to note that for the more severe accidents the release may be unmonitored or there may be large uncertainties associated with the source term and/or meteorology.]

~~[*The EPA PAGs are expressed in terms of the sum of the effective dose equivalent (EDE) and the committed effective dose equivalent (CEDE), or as the thyroid committed dose equivalent (CDE). For the purpose of these IC/EALs, the dose quantity total effective dose equivalent (TEDE), as defined in 10 CFR 20, is used in lieu of "...sum of EDE and CEDE...." The EPA PAG guidance provides for the use adult thyroid dose conversion factors. However, some states have decided to calculate child thyroid CDE. Utility IC/EALs need to be consistent with those of the states involved in the facilities emergency planning zone.*]~~

[The TEDE dose is set at the EPA PAG, while the 5000 mrem thyroid CDE was established in consideration of the 1:5 ratio of the EPA PAG for TEDE and thyroid CDE.]

~~EAL #1~~

~~The site specific monitor list in EAL #1 should include effluent monitors on all potential release pathways.~~

~~[*The monitor reading EALs should be determined using a dose assessment method that back calculates from the dose values specified in the IC. Since doses are generally not monitored in real-time, it is suggested that a release duration of one hour be assumed, and that the EALs be based on a site specific boundary (or beyond) dose of 1000 mrem whole body or 5000 mrem thyroid in one hour, whichever is more limiting (as was done for EALs #2 and #4). If individual site analyses indicate a longer or shorter duration for the period in which the substantial portion of the activity is released, the longer duration should be used.*]~~

~~[*The meteorology used should be the same as those used for determining AU1 and AA1 monitor reading EALs. The same source term (noble gases, particulates, and halogens) may also be used as long as it maintains a realistic and near linear escalation between the EALs for the four classifications. If proper escalations do not result from the use of the same source term, if the calculated values are unrealistically high, or if correlation between the values and dose assessment values does not exist, then consider using an accident source term for AS1 and AG1 calculations.*]~~

Since dose assessment is based on actual meteorology, whereas the monitor reading EAL is not, the results from these assessments may indicate that the classification is not warranted~~, or may indicate that a higher classification is warranted~~. For this reason, emergency implementing procedures ~~should~~ call for the timely performance of dose assessments using actual meteorology and release information. If the results of these dose assessments are available when the classification is made (e.g., initiated at a lower classification level), the dose assessment results override the monitor reading EAL.

Explanation/Discussion/Definitions:

The dose assessment output on the Station Status Checklist (SSCL) is reported at varying distances from the plant as a TEDE 4-Day dose. This TEDE 4-day dose assumes a 4 hr release duration. To obtain the approximate dose for a projected release condition of 1 hour, the TEDE 4-day dose value would need to be divided by 4.

A TEDE 4-Day Dose > 4.0E+03 mRem correspond directly to a TEDE dose rate value of 1000 mRem/hr and exceeds the EPA Protective Actions Guides (PAGs). The Thyroid-CDE Dose > 2.0E+04 mRem correspond directly to an CDE dose rate value of 5000 mRem/hr and exceeds the EPA Protective Actions Guides (PAGs) which was established in consideration of the 1:5 ratio of the EPA PAG for TEDE and thyroid CDE.

For the purposes of this EAL, the Site Boundary for SGS is the **MINIMUM EXCLUSION AREA (MEA)** distance.

Definitions:

> **IMMINENT**: Mitigation actions have been ineffective, additional actions are not expected to be successful, and trended information indicates that the event or condition will occur within approximately 2 hours (unless a different time is specified).
>
> **MINIMUM EXCLUSION AREA (MEA)**: The closest location just beyond the **OWNER CONTROLLED AREA** where a member of the general public could gain access. For Salem the **MEA** is 0.79 miles.
>
> **OWNER CONTROLLED AREA (OCA)**: Property owned, maintained and controlled by PSEG Nuclear as part of the Salem & Hope Creek Generating Station complex. For the purpose of emergency classification, area from the PSEG Nuclear access road checkpoint and inward towards the stations is considered the **OCA**.

EAL Basis Reference(s):

1. NEI 99-01 Rev. 5, AG1 Example EAL #2
2. Salem Radiological EAL Setpoint Calculation Document NEI 99-01 Rev. 5 EALs (Attachment 6)
3. UFSAR 2.1.2.2, Boundaries for Establishing Effluent Release Limits

EAL Category: R – Abnormal Rad Levels / Rad Effluent

EAL Subcategory: 1 – Offsite Rad Conditions

Initiating Condition: Off-site dose resulting from an actual or **IMMINENT** release of gaseous radioactivity greater than 1000 mRem TEDE or 5000 mRem Thyroid CDE for the actual or projected duration of the release

EAL# & Classification Level: **RG1.3 – GENERAL AREA EMERGENCY**

Mode Applicability: All

EAL:

Field survey results indicate closed window dose rates **> 1000 mRem/hr** expected to continue for **≥ 1 hr** at or beyond the **PROTECTED AREA BOUNDARY**

OR

Analyses of field survey samples indicate I-131 concentration **> 3.85E-06 μCi/cc** at or beyond the **PROTECTED AREA BOUNDARY**

Basis:

~~[*Refer to Appendix A for a detailed basis of the radiological effluent IC/EALs.*].~~

This ~~IC~~ EAL addresses radioactivity releases that result in doses at or beyond the **PROTECTED AREA BOUNDARY**~~site boundary~~ that exceed the EPA Protective Action Guides (PAGs). Public protective actions will be necessary. Releases of this magnitude are associated with the failure of plant systems needed for the protection of the public and likely involve fuel damage.

[While these failures are addressed by other ~~ICs~~EALs, this ~~IC~~ EAL provides appropriate diversity and addresses events which may not be able to be classified on the basis of plant status alone. It is important to note that for the more severe accidents the release may be unmonitored or there may be large uncertainties associated with the source term and/or meteorology.]

~~[*The EPA PAGs are expressed in terms of the sum of the effective dose equivalent (EDE) and the committed effective dose equivalent (CEDE), or as the thyroid committed dose equivalent (CDE). For the purpose of these IC/EALs, the dose quantity total effective dose equivalent (TEDE), as defined in 10 CFR 20, is used in lieu of "…sum of EDE and CEDE…." The EPA PAG guidance provides for the use adult thyroid dose conversion factors. However,*~~

~~some states have decided to calculate child thyroid CDE. Utility IC/EALs need to be consistent with those of the states involved in the facilities emergency planning zone.~~]

[The TEDE dose is set at the EPA PAG, while the 5000 mrem thyroid CDE was established in consideration of the 1:5 ratio of the EPA PAG for TEDE and thyroid CDE.]

~~EAL #1~~

~~The site specific monitor list in EAL #1 should include effluent monitors on all potential release pathways.~~

~~[The monitor reading EALs should be determined using a dose assessment method that back calculates from the dose values specified in the IC. Since doses are generally not monitored in real-time, it is suggested that a release duration of one hour be assumed, and that the EALs be based on a site specific boundary (or beyond) dose of 1000 mrem whole body or 5000 mrem thyroid in one hour, whichever is more limiting (as was done for EALs #2 and #4). If individual site analyses indicate a longer or shorter duration for the period in which the substantial portion of the activity is released, the longer duration should be used.~~]

~~[The meteorology used should be the same as those used for determining AU1 and AA1 monitor reading EALs. The same source term (noble gases, particulates, and halogens) may also be used as long as it maintains a realistic and near linear escalation between the EALs for the four classifications. If proper escalations do not result from the use of the same source term, if the calculated values are unrealistically high, or if correlation between the values and dose assessment values does not exist, then consider using an accident source term for AS1 and AG1 calculations.~~]

~~Since dose assessment is based on actual meteorology, whereas the monitor reading EAL is not, the results from these assessments may indicate that the classification is not warranted, or may indicate that a higher classification is warranted. For this reason, emergency implementing procedures should call for the timely performance of dose assessments using actual meteorology and release information. If the results of these dose assessments are available when the classification is made (e.g., initiated at a lower classification level), the dose assessment results override the monitor reading EAL.~~

Explanation/Discussion/Definitions:

This EAL addresses a radioactivity release field survey I-131 sample concentration or count rate that would result in a Thyroid CDE dose of greater than 5000 mRem for one hour of inhalation at or beyond the **PROTECTED AREA BOUNDARY**. This value exceeds the EPA Protective Action Guides (PAGs). Releases of this magnitude are associated with the failure of plant systems needed for the protection of the public.

The Iodine-131 field survey sample concentration and count rate threshold is based on I-131 dose conversion factors (DCFs) from EPA-400. The thresholds are based on a Thyroid-CDE Dose Rate of 5000 mRem/hr for I-131.

For the purposes of this EAL, the **PROTECTED AREA BOUNDARY** is used as it is an easily determined location to obtain a field survey dose rate reading or to obtain a field sample.

Definitions:

IMMINENT: Mitigation actions have been ineffective, additional actions are not expected to be successful, and trended information indicates that the event or condition will occur within approximately 2 hours (unless a different time is specified).

PROTECTED AREA (PA): A security controlled area within the **OWNER-CONTROLLED AREA (OCA)** that is enclosed by the security perimeter fence and monitored by intrusion detection systems. Access to the **PA** requires proper security clearance and is controlled at the Security Center.

OWNER CONTROLLED AREA (OCA): Property owned, maintained and controlled by PSEG Nuclear as part of the Salem & Hope Creek Generating Station complex. For the purpose of emergency classification, area from the PSEG Nuclear access road checkpoint and inward towards the stations is considered the **OCA**.

EAL Basis Reference(s):

1. NEI 99-01 Rev. 5, AG1 Example EAL #4
2. Off-Site Dose Calculation Manual, Figure 5.1-3, Area Plot Plan of Site
3. Salem Radiological EAL Setpoint Calculation Document NEI 99-01 Rev. 5 EALs (Attachment 6)

EAL Category: R – Abnormal Rad Levels / Rad Effluent

EAL Subcategory: 2 – Onsite Rad Conditions/Fuel Pool Events

Initiating Condition: **UNPLANNED** rise in plant radiation levels

Mode Applicability: All

EAL# & Classification Level: **RU2.1 – UNUSUAL EVENT**

EAL:

UNPLANNED water level drop in the refueling cavity, refueling canal or spent fuel pool (SFP) as indicated by **ANY** of the following:

- Confirmed SFP low level alarm (OHA-C35 SFP LVL LO)
- RVLIS - Refueling Mode
- Visual observation (local or remote)

AND

VALID area radiation monitor reading rise on **ANY** of the following:

- 1(2)R5 Fuel Handling Bldg
- 1(2)R9 Fuel Storage Area
- 1(2)R32A Fuel Handling Crane Fuel Handling Bldg (local monitor)
- 1(2)R2 Containment General Area 130ft elevation
- Temporary ARM

Basis:

This ~~IC~~ EAL addresses increased radiation levels as a result of water level decreases above irradiated fuel or events that have resulted, or may result, in unplanned increases in radiation dose rates within plant buildings. These radiation increases represent a loss of control over radioactive material and represent a potential degradation in the level of safety of the plant.

~~EAL #1~~

~~[*Site specific indications may include instrumentation such as water level and local area radiation monitors, and personnel (e.g., refueling crew) reports. If available, video cameras may allow remote observation. Depending on available level instrumentation, the declaration*~~

~~*threshold may need to be based on indications of water makeup rate or decrease in water storage tank level.*]~~

~~[*In light of Reactor Cavity Seal failure incidents at two different PWRs and loss of water in the Spent Fuel Pit/Fuel Transfer Canal at a BWR, explicit coverage of these types of events via threshold #1 is appropriate given their potential for increased doses to plant staff.*]~~

The refueling pathway is the ~~a site specific~~ combination of cavities~~, tubes, canals~~ and pools in which spent fuel may be located. While a radiation monitor could detect an increase in dose rate due to a drop in the water level, it might not be a reliable indication of whether or not the fuel is covered.

~~[~~For example, an ~~refueling bridge~~ ARM reading may increase due to planned evolutions such as head lift, or even a fuel assembly being raised in the manipulator mast. Also, a monitor could in fact be properly responding to a known event involving transfer or relocation of a source, stored in or near the fuel pool or responding to a planned evolution such as removal of the reactor head. Generally, increased radiation monitor indications will need to combined with another indicator (or personnel report) of water loss.~~]~~

~~[*Application of this EAL requires understanding of the actual radiological conditions present in the vicinity of the monitor. Information Notice No. 90-08, "KR-85 Hazards from Decayed Fuel" should be considered in establishing radiation monitor EALs.*]~~

For refueling events where the water level drops below the ~~RPV~~ Reactor Vessel flange, classification would be via EAL ~~CU2~~CU3.1. This event escalates to an ALERT per ~~AA2~~ EAL RA2.1 if irradiated fuel outside the reactor vessel is uncovered. For events involving irradiated fuel in the reactor vessel, escalation would be via the Fission Product Barrier Table for events in operating modes 1-4.

~~EAL #2~~

~~This EAL addresses increases in plant radiation levels that represent a loss of control of radioactive material resulting in a potential degradation in the level of safety of the plant.~~

~~This EAL excludes radiation level increases that result from planned activities such as use of radiographic sources and movement of radioactive waste materials. A specific list of ARMs is not required as it would restrict the applicability of the Threshold. The intent is to identify loss of control of radioactive material in any monitored area.~~

Explanation/Discussion/Definitions:

The Spent Fuel Pool (SFP) low level alarm actuates at 128' 2" from 1(2)LC650.

During refueling operations the reactor vessel and refueling cavity are flooded. During fuel handling operations, the fuel transfer tube (canal) will connect the refueling cavity and the Spent Fuel Pool (SFP). An unexplained lowering of refueling cavity level or SFP level can be

an indication that these volumes are draining. A drop in refueling cavity and SFP level may result in a SFP low-level alarm. This alarm would be validated by visual observation of lowering level (local or remote) in the refueling cavity or SFP.

When the spent fuel pool and refueling cavity are connected, there could exist the possibility of uncovering irradiated fuel. Therefore, this EAL is applicable for conditions in which irradiated fuel is being transferred to and from the Reactor Vessel and SFP as well as for SFP drain down events.

For a loss of shielding, the source of the radiation is within the refueling cavity or SFP. Without the shielding provided by normal water inventory in the SFP, equipment pool, and/or refueling cavity, radiation levels from irradiated fuel and activation products will rise substantially.

Area radiation monitors that may respond to a loss of spent fuel shielding are those located on the 130' elevation (Containment or Fuel Handling Building):

- 1(2)R5 Fuel Handling Bldg
- 1(2)R9 Fuel Storage Area
- 1(2)R32A Fuel Handling Crane Fuel Handling Bldg (local monitor)
- 1(2)R2 Containment General Area 130ft elevation
- Temporary Area Radiation Monitors

Definitions:

UNPLANNED: A parameter change or an event that is not the result of an intended evolution and requires corrective or mitigative actions.

VALID: An indication, report, or condition, is considered to be **VALID** when it is verified by (1) an instrument channel check, or (2) indications on related or redundant indicators, or (3) by direct observation by plant personnel, such that doubt related to the indicator's operability, the condition's existence, or the report's accuracy is removed. Implicit in this definition is the need for timely assessment.

EAL Basis Reference(s):

1. NEI 99-01 Rev. 5, AU2 Example EAL #1
2. S1(S2).OP-AR.ZZ-0003(Q) OHA-C35 SFP LVL LO
3. S1(S2).OP-AB.FUEL-0002(Q) Loss of Refueling Cavity or Spent Fuel Pool Level
4. S1(S2).OP-AB.RAD-0001(Q) Abnormal Radiation
5. S1(S2).OP-AB.FUEL-0001(Q) Fuel Handling Incident

This page intentionally blank

EAL Category: R – Abnormal Rad Levels / Rad Effluent

EAL Subcategory: 2 – Onsite Rad Conditions/Fuel Pool Events

Initiating Condition: **UNPLANNED** rise in plant radiation levels

Mode Applicability: All

EAL# & Classification Level: **RU2.2 – UNUSUAL EVENT**

EAL:

UNPLANNED VALID area radiation monitor readings or survey results rise by a factor of **1,000** over normal levels (Note 7)

Note 7: Normal levels can be considered as the highest reading in the past 24 hours excluding the current peak value

Basis:

This ~~IC~~ EAL addresses ~~increased radiation levels as a result of water level decreases above irradiated fuel or events that have resulted, or may result, in~~ **UNPLANNED** increases in radiation dose rates within plant buildings. These radiation increases represent a loss of control over radioactive material and represent a potential degradation in the level of safety of the plant.

~~EAL #1~~

~~[*Site specific indications may include instrumentation such as water level and local area radiation monitors, and personnel (e.g., refueling crew) reports. If available, video cameras may allow remote observation. Depending on available level instrumentation, the declaration threshold may need to be based on indications of water makeup rate or decrease in water storage tank level.*]~~

~~[*In light of Reactor Cavity Seal failure incidents at two different PWRs and loss of water in the Spent Fuel Pit/Fuel Transfer Canal at a BWR, explicit coverage of these types of events via threshold #1 is appropriate given their potential for increased doses to plant staff.*]~~

~~The refueling pathway is a site specific combination of cavities, tubes, canals and pools. While a radiation monitor could detect an increase in dose rate due to a drop in the water level, it might not be a reliable indication of whether or not the fuel is covered.~~

~~[For example, a refueling bridge ARM reading may increase due to planned evolutions such as head lift, or even a fuel assembly being raised in the manipulator mast. Also, a monitor could in fact be properly responding to a known event involving transfer or relocation~~

~~of a source, stored in or near the fuel pool or responding to a planned evolution such as removal of the reactor head. Generally, increased radiation monitor indications will need to combined with another indicator (or personnel report) of water loss.~~]

~~[*Application of this EAL requires understanding of the actual radiological conditions present in the vicinity of the monitor. Information Notice No. 90-08, "KR-85 Hazards from Decayed Fuel" should be considered in establishing radiation monitor EALs.*~~]

~~For refueling events where the water level drops below the RPV flange classification would be via CU2. This event escalates to an Alert per AA2 if irradiated fuel outside the reactor vessel is uncovered. For events involving irradiated fuel in the reactor vessel, escalation would be via the Fission Product Barrier Table for events in operating modes 1-4.~~

~~EAL #2~~

~~This EAL addresses increases in plant radiation levels that represent a loss of control of radioactive material resulting in a potential degradation in the level of safety of the plant.~~

This EAL excludes radiation level increases that result from planned activities such as use of radiographic sources and movement of radioactive waste materials. A specific list of ARMs is not required as it would restrict the applicability of the threshold. The intent is to identify loss of control of radioactive material in any monitored area.

Explanation/Discussion/Definitions:

Definitions:

> **UNPLANNED** - A parameter change or an event that is not the result of an intended evolution and requires corrective or mitigative actions.
>
> **VALID** - An indication, report, or condition, is considered to be **VALID** when it is verified by (1) an instrument channel check, or (2) indications on related or redundant indicators, or (3) by direct observation by plant personnel, such that doubt related to the indicator's operability, the condition's existence, or the report's accuracy is removed. Implicit in this definition is the need for timely assessment.

EAL Basis Reference(s):

1. NEI 99-01 Rev. 5, AU2 Example EAL #2

This page intentionally blank

EAL Category: R – Abnormal Rad Levels / Rad Effluent

EAL Subcategory: 2 – Onsite Rad Conditions/Fuel Pool Events

Initiating Condition: Damage to irradiated fuel or loss of water level that has resulted or will result in the uncovering of irradiated fuel outside the Reactor Vessel

Mode Applicability: All

EAL# & Classification Level: **RA2.1 – ALERT**

EAL:

Damage to irradiated fuel or loss of water level (uncovering irradiated fuel outside the Reactor Vessel) that causes a **VALID** high alarm on **ANY** of the following radiation monitors:

Fuel Handling Bldg

- 1(2)R5 Fuel Handling Bldg
- 1(2)R9 Fuel Storage Area
- 1(2)R32A Fuel Handling Crane Fuel Handling Bldg (local monitor)
- 1(2)R41A Plant Vent

Containment

- 1(2)R2 Containment General Area 130ft elevation
- 1(2)R11A Containment Air - Particulate
- 1(2)R12A Containment Vent - Noble Gas
- 1(2)R12B Containment Vent - Iodine

Basis:

This ~~IC~~ EAL addresses increases in radiation dose rates within plant buildings, and may be a precursor to a radioactivity release to the environment. These events represent a loss of control over radioactive material and represent an actual or substantial potential degradation in the level of safety of the plant.

[These events escalate from ~~AU2~~ EAL RU2.1 in that fuel activity has been released, or is anticipated due to fuel heatup. This ~~IC~~ EAL applies to spent fuel requiring water coverage and is not intended to address spent fuel which is licensed for dry storage.]

~~EAL #1~~

~~[*Site specific indications may include instrumentation such as water level and local area radiation monitors, and personnel (e.g., refueling crew) reports. If available, video cameras may allow remote observation. Depending on available level instrumentation, the declaration threshold may need to be based on indications of water makeup rate or decrease in water storage tank level.*]~~

~~[*In light of Reactor Cavity Seal failure incidents at two different PWRs and loss of water in the Spent Fuel Pit/Fuel Transfer Canal at a BWR, explicit coverage of these types of events via threshold #1 is appropriate given their potential for increased doses to plant staff.*]~~

~~EAL #2~~

This EAL addresses radiation monitor indications of fuel uncovery and/or fuel damage.

Increased ventilation monitor readings may be indication of a radioactivity release from the fuel, confirming that damage has occurred. Increased background at the ventilation monitor due to water level decrease may mask increased ventilation exhaust airborne activity and needs to be considered.

While a radiation monitor could detect an increase in dose rate due to a drop in the water level, it might not be a reliable indication of whether or not the fuel is covered.

[For example, a refueling bridge ARM reading may increase due to planned evolutions such as head lift, or even a fuel assembly being raised in the manipulator mast. Also, a monitor could in fact be properly responding to a known event involving transfer or relocation of a source, stored in or near the fuel pool or responding to a planned evolution such as removal of the reactor head. Generally, increased radiation monitor indications will need to combined with another indicator (or personnel report) of water loss.]

~~[*Application of this EAL requires understanding of the actual radiological conditions present in the vicinity of the monitor. Information Notice No. 90-08, "KR-85 Hazards from Decayed Fuel" should be considered in establishing radiation monitor EALs.*]~~

Escalation of this emergency classification level, if appropriate, would be based on ~~AS1~~ EAL RS1.1 or ~~AG1~~EAL RG1.1.

Explanation/Discussion/Definitions:

Indications of spent fuel damage may include:

- Actual visual observation of a fuel handling incident

- Gas bubbles in the vicinity of a fuel bundle
- Discoloration of the water in the vicinity of a fuel bundle
- Increasing radiation and alarm on area and ventilation radiation monitors

When the Spent Fuel Pool (SFP) and refueling cavity are connected, there could exist the possibility of uncovering irradiated fuel. Therefore, this EAL is applicable for conditions in which irradiated fuel is being transferred to and from the Reactor Vessel and SFP.

For a loss of shielding, the source of the radiation is within the refueling cavity, refueling canal or SFP. Without the shielding provided by normal water inventory in the SFP, refueling canal and/or refueling cavity, radiation levels from irradiated fuel and activation products will rise substantially in either the Containment or Fuel Handling Building. Radiation levels ≥ 2 R/hr in the Containment or FHB are indicative of imminent uncovering of spent fuel or reactor internals.

Fuel Handling Building (FHB)

Area Radiation Monitors (ARMs) 1(2)R5 Spent Fuel, 1(2)R9 New Fuel Storage and 1(2)R32A Fuel Handling Crane are located on the 130' elevation of the FHB.

- 1(2)R5 Fuel Handling Bldg - This channel continuously monitors the fuel storage areas. A high radiation alarm will initiate charcoal filtration of the FHB atmosphere.
- 1(2)R9 Fuel Storage Area - This channel also continuously monitors the fuel storage areas. A high radiation alarm will also initiate charcoal filtration of the FHB atmosphere.
- 1(2)R32A Fuel Handling Crane Fuel Handling Bldg (local monitor) - This channel is not connected to the central Radiation Monitoring System and is provided with a flashing beacon and stops upward hoist movement.

1(2)R41A Plant Vent is the low range noble gas Plant Vent monitor. Releases of fission product gases to the FHB atmosphere would be transported via the FHB ventilation and detected in the plant vent radiation monitor.

Containment

Area Radiation Monitor (ARM) 1(2)R2 Containment is located on the 130' elevation of the Containment.

Releases of fission product particulates, iodines or gases to the Containment atmosphere would be transported via Containment ventilation and detected in the Containment Vent Radiation Monitors 1(2)R11A (part.), 1(2)R12A (gas) or 1(2)R12B (iodine).

Definitions:

VALID - An indication, report, or condition, is considered to be **VALID** when it is verified by (1) an instrument channel check, or (2) indications on related or redundant indicators, or (3) by direct observation by plant personnel, such that doubt related to the indicator's operability, the condition's existence, or the report's accuracy is removed. Implicit in this definition is the need for timely assessment.

EAL Basis Reference(s):

1. NEI 99-01 Rev. 5, AA2 Example EAL #2
2. S1(S2).OP-AB.FUEL-0002(Q) Loss of Refueling Cavity or Spent Fuel Pool Level
3. S1(S2).OP-AB.RAD-0001(Q) Abnormal Radiation
4. S1(S2).OP-AB.FUEL-0001(Q) Fuel Handling Incident
5. UFSAR Section 11.4 Radiation Monitoring Systems

This page intentionally blank

EAL Category: R – Abnormal Rad Levels / Rad Effluent

EAL Subcategory: 2 – Onsite Rad Conditions/Fuel Pool Events

Initiating Condition: Damage to irradiated fuel or loss of water level that has resulted or will result in the uncovering of irradiated fuel outside the Reactor Vessel

Mode Applicability: All

EAL# & Classification Level: **RA2.2 – ALERT**

EAL:

A water level drop in the refueling cavity, spent fuel pool or refueling canal that will result in irradiated fuel becoming uncovered

Basis:

~~This IC addresses increases in radiation dose rates within plant buildings, and may be a precursor to a radioactivity release to the environment. These~~ This events represents a loss of control over radioactive material and represents an actual or substantial potential degradation in the level of safety of the plant.

~~[These~~ This events escalates from ~~AU2~~ EAL RU2.1 in that fuel activity ~~has been~~ released~~,~~ ~~or~~ is anticipated due to fuel heatup. This ~~IC~~ EAL applies to spent fuel requiring water coverage and is not intended to address spent fuel which is licensed for dry storage.~~]~~

~~EAL #1~~

~~[Site specific~~ ~~I~~indications may include instrumentation such as water level and local area radiation monitors, and personnel (e.g., refueling crew) reports. If available, video cameras may allow remote observation. Depending on available level instrumentation, the declaration threshold may need to be based on indications of water makeup rate or decrease in water storage tank level.~~]~~

~~[*In light of Reactor Cavity Seal failure incidents at two different PWRs and loss of water in the Spent Fuel Pit/Fuel Transfer Canal at a BWR, explicit coverage of these types of events via threshold #1 is appropriate given their potential for increased doses to plant staff.*]~~

~~EAL #2~~

~~This EAL addresses radiation monitor indications of fuel uncovery and/or fuel damage.~~

~~Increased ventilation monitor readings may be indication of a radioactivity release from the fuel, confirming that damage has occurred. Increased background at the ventilation monitor due to water level decrease may mask increased ventilation exhaust airborne activity and needs to be considered.~~

~~While a radiation monitor could detect an increase in dose rate due to a drop in the water level, it might not be a reliable indication of whether or not the fuel is covered.~~

~~[For example, a refueling bridge ARM reading may increase due to planned evolutions such as head lift, or even a fuel assembly being raised in the manipulator mast. Also, a monitor could in fact be properly responding to a known event involving transfer or relocation of a source, stored in or near the fuel pool or responding to a planned evolution such as removal of the reactor head. Generally, increased radiation monitor indications will need to combined with another indicator (or personnel report) of water loss.]~~

~~[*Application of this EAL requires understanding of the actual radiological conditions present in the vicinity of the monitor. Information Notice No. 90-08, "KR-85 Hazards from Decayed Fuel" should be considered in establishing radiation monitor EALs.*]~~

Escalation of this emergency classification level, if appropriate, would be based on ~~AS1~~ EAL RS1.1 or ~~AG1~~EAL RG1.1.

Explanation/Discussion/Definitions:

None

EAL Basis Reference(s):

1. NEI 99-01 Rev. 5, AA2 Example EAL #1

This page intentionally blank

EAL Category: R – Abnormal Rad Levels / Rad Effluent

EAL Subcategory: 3 – CR/CAS Rad

Initiating Condition: Rise in radiation levels within the facility that impedes operation of systems required to maintain plant safety functions

Mode Applicability: All

EAL# & Classification Level: **RA3.1 – ALERT**

EAL:

Dose rates **> 15 mR/hr** in **EITHER** of the following:

- Control Room (1(2)R1A)
- Central Alarm Station

Basis:

This ~~IC~~ EAL addresses increased radiation levels that~~:~~ impact continued operation in areas requiring continuous occupancy to maintain safe operation or to perform a safe shutdown.

The cause and/or magnitude of the increase in radiation levels is not a concern of this ~~IC~~EAL. The Emergency Coordinator must consider the source or cause of the increased radiation levels and determine if any other ~~IC~~ EAL may be involved.

~~[*This IC is not meant to apply to increases in the containment dome radiation monitors as these are events which are addressed in the fission product barrier table.*]~~

~~[~~The value of 15mR/hr is derived from the GDC 19 value of 5 rem in 30 days with adjustment for expected occupancy times. Although Section III.D.3 of NUREG-0737, "Clarification of TMI Action Plan Requirements", provides that the 15 mR/hr value can be averaged over the 30 days, the value is used here without averaging, as a 30 day duration implies an event potentially more significant than an Alert.~~]~~

Areas requiring continuous occupancy include the Control Room and~~, as appropriate to the site, any other control stations that are staffed continuously, such as a radwaste control room, or a security alarm station. [*Typically these areas are the Control Room and*~~ the Central Alarm Station (CAS).~~]~~

Explanation/Discussion/Definitions:

Control Room ARM 1(2)R1A measures area radiation in a range of 0.1 - 10^3 mR/hr. Should increase Control Room radiation be detected, operators are directed to align Control Room Ventilation in the Accident Pressurized mode.

There is no permanently installed CAS area radiation monitor that may be used to assess this EAL threshold. Therefore, this threshold must be assessed via local radiation survey for the CAS.

EAL Basis Reference(s):

1. NEI 99-01 Rev. 5, AA3 Example EAL #1
2. UFSAR Section 11.4 Radiation Monitoring Systems
3. S1(S2).OP-AB.RAD-0001(Q) Abnormal Radiation

EAL Category: E – **ISFSI**

EAL Sub-category: Spent Fuel Transit

Initiating Condition: Damage to a loaded cask **CONFINEMENT BOUNDARY**

Mode Applicability: Mode NOT applicable

EAL# & Classification Level: **EU1.1 – UNUSUAL EVENT**

EAL:

Damage to a Multi Purpose Canister (MPC) **CONFINEMENT BOUNDARY** as indicated by on-contact radiation readings **≥ 600 mR/hr** (gamma + neutron) on the surface of the spent fuel cask, excluding the air vents, OR **≥ 60 mR/hr** (gamma + neutron) on the top of the spent fuel cask while in transit to the **ISFSI**.

Basis:

An ~~NOUE~~ UNUSUAL EVENT in this ~~IC~~ EAL is categorized on the basis of the occurrence of an event of sufficient magnitude that a loaded in-transit ~~cask~~ MPC **CONFINEMENT BOUNDARY** is damaged or violated. This includes classification based on a loaded fuel storage cask **CONFINEMENT BOUNDARY** loss ~~leading to the degradation of the fuel during storage or~~ posing an operational safety problem with respect to its removal from storage.

~~*[The results of the ISFSI Safety Analysis Report (SAR) per NUREG 1536 or SAR referenced in the cask('s) Certificate of Compliance and the related NRC Safety Evaluation Report identify natural phenomena events and accident conditions that could potentially effect the CONFINEMENT BOUNDARY. This EAL addresses a dropped cask, a tipped over cask, EXPLOSION, PROJECTILE damage, FIRE damage or natural phenomena affecting a cask (e.g., seismic event, tornado, etc.).].*~~

Explanation/Discussion/Definitions:

This EAL applies to emergency conditions affecting a spent fuel cask caused by an accident or natural phenomena. This EAL would be applicable at all times in all modes for a loaded spent fuel storage cask from the time the lid is installed, as the cask leaves the Salem Fuel Handling Building and during transport to the **INDEPENDENT SPENT FUEL STORAGE INSTALLATION (ISFSI)**. This EAL provides for an Unusual Event classification, which may be entered if conditions occur that have the potential for damaging or degrading the **CONFINEMENT BOUNDARY** of a spent fuel cask. Damage to the storage cask could result in an increase in direct radiation readings from the cask. This

Salem EAL is only applicable for a Salem spent fuel cask that is in transit to the **ISFSI**. After the spent fuel cask is in place at the **ISFSI**, any further conditions that could adversely impact the **ISFSI** or an individual cask from either Salem or Hope Creek would be assessed and classified as needed by the Hope Creek Shift Manager (SM) per Hope Creek EAL EU1.1.

As provided in the Holtec HI-STORM 100 System Certificate of Compliance (CoC), Appendix A (Technical Specifications), Section 5.7.4 contains radiation values for the cask that should not be exceeded. Under Amendment #5, the highest allowable radiation level on contact with the HI-STORM 100 cask body is 300 mR/hr on the side of the cask and 30 mR/hr on the top of the cask. Keeping in line with NEI guidance that a UE is warranted for radiation conditions at a level of twice the Technical Specification value, **600 mR/hr** and **60 mR/hr** are being used as the EAL threshold radiation levels.

Continued use of this lower value is conservative for casks loaded under later CoC amendments where the radiation limit values may increase. The threshold values are sufficiently above nominal radiation levels of the **CONFINEMENT BOUNDARY** that radiation levels above this EAL threshold would indicate significant damage to the **CONFINEMENT BOUNDARY**.

No releases of radioactive material requiring offsite response or monitoring are expected because the seal-welded spent fuel canister (part of the **CONFINEMENT BOUNDARY**) is designed to remain intact under all normal, off-normal, and credible accident conditions of onsite transport and storage at the **ISFSI**, according to Holtec licensing documents. Prior to the installation of the spent fuel cask lid on the HI-STORM 100 cask, emergency classifications would be based on other Category R EALs.

Definitions:

> **INDEPENDENT SPENT FUEL STORAGE INSTALLATION (ISFSI)**: A complex that is designed and constructed for the interim storage of spent nuclear fuel and other radioactive materials associated with spent fuel storage.
>
> **CONFINEMENT BOUNDARY**: Is the barrier(s) between areas containing radioactive substances and the environment and includes the multi-purpose canister (MPC) and, for the purposes of this EAL, the associated cask shielding.

EAL Basis Reference(s):

1. NEI 99-01 Rev. 5, E-HU1 Example EAL #1
2. HOLTEC HI-STORM 100 UFSAR, Chapter 5 and Chapter 11
3. Certificate of Compliance, Docket # 72-1014
4. Holtec International Final Safety Analysis Report for the HI-STORM 100 Cask System Holtec Report No.: HI-2002444
5. Certificate of Compliance No. 72-1014 Appendix A Technical Specifications for the HI-STORM 100 Cask System Section 1.1 Definitions

EALs for:

HAZARDS

EAL Category: ~~C~~ H – Hazards & Other Conditions Affecting Plant Safety

EAL Subcategory: 1 – Natural & Destructive Phenomena

Initiating Condition: Natural or destructive phenomena affecting the **PROTECTED AREA**

Mode Applicability: All

EAL# & Classification Level: **HU1.1 – UNUSUAL EVENT (Common Site)**

EAL:

Seismic event identified by **ANY** two of the following:

- Earthquake felt in plant by Control Room Operators
- SMA-3 Event Indicator (flag) white
- National Earthquake Information Center (NEIC) (Note 4)

Note 4: The NEIC can be contacted by calling (303) 273-8500. Select option #1 and inform the analyst you wish to confirm recent seismic activity in the vicinity of Salem/Hope Creek Generating Station. Provide the analyst with the following coordinates: 39° 27' 46" (39.465°) north latitude, 75° 32' 08" (75.537°) west longitude.

Basis:

~~These~~ This EAL~~s~~ ~~are~~ is categorized on the basis of the occurrence of an event of sufficient magnitude to be of concern to plant operators.

~~EAL #1~~

Damage may be caused to some portions of the site, but should not affect ability of safety functions to operate.

As defined in the EPRI-sponsored Guidelines for Nuclear Plant Response to an Earthquake, dated October 1989, a "felt earthquake" is: An earthquake of sufficient intensity such that: (a) the vibratory ground motion is felt at the nuclear plant site and recognized as an earthquake based on a consensus of control room operators on duty at the time, and (b) for plants with operable seismic instrumentation, the seismic switches of the plant are activated.

~~[*For most plants with seismic instrumentation, the seismic switches are set at an acceleration of about 0.01g. This EAL should be developed on site specific basis. The method of detection can be based on instrumentation, validated by a reliable source, or operator assessment.*]~~

The National Earthquake Information Center can confirm if an earthquake has occurred in the area of the plant.

Explanation/Discussion/Definitions:

SGS seismic instrumentation consists of a Kinemetrics SMA-3 Strong Motion Accelerograph and associated sensors that are equipped with seismic triggers set to alarm (Unit 1 OHA A-37 SEIS RCDR SYS ACT) and initiate recording at an acceleration equal to or exceeding 0.01 g. When the seismic trigger activates the SMA-3 Event Indicator (flag) will change from black to white and the amber event alarm will illuminate. The amber event alarm will extinguish when ground acceleration reduces below the 0.01 g setpoint but the Event Indicator (flag) will remain white until manually reset. Three time-history triaxial acceleration sensors are provided (2 in Reactor Building, 1 in Auxiliary Building). These sensors transmit electrical signals to be recorded on magnetic tape.

The NEIC can confirm seismic activity in the vicinity of the SGS/HCGS site. Refer to Note 4 to contact the NEIC.

Alternatively go to the USGS NEIC website:

http://earthquake.usgs.gov/eqcenter/

On the US map, click on 'New Jersey' and then click on earthquake indicator for information. The maps are updated within 5 min. of a measured earthquake.

Additional Earthquake information can be found on the internet at:

- http://www.earthquake.usgs.gov
- http://www.mgs.md.gov (click on "Live Earthquake Data online")
- http://earthquake.usgs.gov/regional/neic

This event escalates to an ALERT under EAL HA1.1 if the earthquake exceeds Operating Basis Earthquake (OBE) levels (0.1g).

An approximate relationship between acceleration units in gravity and magnitude reported per the Richter scale is as follows:

An Acceleration of:	is approx. equal to a Richter Scale Magnitude of:
0.01g	4.0
0.02g	4.5

0.1g	5.5
0.2g	6.5

Definitions:

PROTECTED AREA (PA): A security controlled area within the **OWNER CONTROLLED AREA (OCA)** that is enclosed by the security perimeter fence and monitored by intrusion detection systems. Access to the **PA** requires proper security clearance and is controlled at the Security Center.

OWNER CONTROLLED AREA (OCA): Property owned, maintained and controlled by PSEG Nuclear as part of the Salem & Hope Creek Generating Station complex. For the purpose of emergency classification, area from the PSEG Nuclear access road checkpoint and inward towards the stations is considered the **OCA**.

EAL Bases Reference(s):

1. NEI 99-01, Rev. 05, HU1 Example EAL #1
2. UFSAR Table 7.7-3 Seismic Monitoring Instrumentation
3. SC.OP-AB.ZZ-0004(Q) Earthquake
4. S1.OP-AR.ZZ-0001(Q) OHA A-37 SEIS RCDR SYS ACT
5. UFSAR 2.1.1 Site Location
6. UFSAR 1.2.4 Seismology

This page intentionally blank

EAL Category: ~~G~~ H – Hazards & Other Conditions Affecting Plant Safety

EAL Subcategory: 1 – Natural & Destructive Phenomena

Initiating Condition: Natural or destructive phenomena affecting the **PROTECTED AREA**

Mode Applicability: All

EAL# & Classification Level: **HU1.2 – UNUSUAL EVENT (Common Site)**

EAL:

Tornado TOUCHING DOWN within the **PROTECTED AREA**

OR

Average Wind Speeds **> 95 MPH** from **ANY** elevation of the Met Tower

Basis:

~~These~~ This EAL~~s~~ ~~are~~ is categorized on the basis of the occurrence of an event of sufficient magnitude to be of concern to plant operators.

~~EAL #2~~

This EAL is based on a tornado ~~striking (~~touching down~~)~~ within the **PROTECTED AREA** or high winds onsite ~~within the Protected Area.~~

~~[The high wind value should be based on site specific FSAR design basis as long as it is within the range of the instrumentation available for wind speed.]~~

Escalation of this emergency classification level, if appropriate, would be based on ~~**VISIBLE DAMAGE**~~**DEGRADED PERFORMANCE**, or by other ~~in~~ in-plant conditions, via EAL HA1.2.

Explanation/Discussion/Definitions:

Average, as used in the EAL threshold, is intended to be the 15 minute rolling average as provided by SPDS and not the instantaneous wind speed.

The design wind velocities are 108 mph (including a gust factor of approximately 1.3) at 30 feet above ground. However, the Control Room wind speed only provides indication up to 100 mph so the classification threshold has been capped at 95 mph to allow for onscale indication of wind speed. The manner in which the HCGS SPDS processes data from the meteorological

instrumentation differs from the SGS SPDS; consequently, minor differences between HCGS and SGS readings may occur.

A tornado touching down within the **PROTECTED AREA** warrants declaration of an UNUSUAL EVENT regardless of the measured wind speed at the meteorological tower. A tornado is defined as a violently rotating column of air in contact with the ground and extending from the base of a thunderstorm.

The National Weather Service can be contacted for further information about existing or projected Adverse Weather Conditions:

- Phila/Mount Holly (609) 261-6600
- NWS Web site http://www.erh.noaa.gov/er/phi
- Phila/Mount Holly (609) 261-6604
- Phila/Mount Holly (609) 261-6602

Definitions:

PROTECTED AREA (PA): A security controlled area within the **OWNER CONTROLLED AREA (OCA)** that is enclosed by the security perimeter fence and monitored by intrusion detection systems. Access to the **PA** requires proper security clearance and is controlled at the Security Center.

OWNER CONTROLLED AREA (OCA): Property owned, maintained and controlled by PSEG Nuclear as part of the Salem & Hope Creek Generating Station complex. For the purpose of emergency classification, area from the PSEG Nuclear access road checkpoint and inward towards the stations is considered the **OCA**.

VISIBLE DAMAGE: Damage to equipment or structure that is readily observable without measurements, testing, or analysis. Damage is sufficient to cause concern regarding the continued operability or reliability of the affected structure, system, or component. Example damage includes: deformation due to heat or impact, denting, penetration, rupture, cracking, and paint blistering. Surface blemishes (e.g., paint chipping, scratches) should not be included.

EAL Bases Reference(s):

1. NEI 99-01, Rev. 05, HU1 Example EAL #2
2. UFSAR 3.3.1.1 Design wind Velocity and Loading
3. OP-AA-108-111-1001 Severe Weather and Natural Disaster Guidelines
4. NC.CH-SC.MET-1206(Q) Meteorological Monitoring System Calibration and Maintenance
5. SC.OP-AB.ZZ-0001(Q) Adverse Environmental Conditions

EAL Category: ~~C~~ H – Hazards & Other Conditions Affecting Plant Safety

EAL Subcategory: 1 – Natural & Destructive Phenomena

Initiating Condition: Natural or destructive phenomena affecting the **PROTECTED AREA**

Mode Applicability: All

EAL# & Classification Level: **HU1.3 – UNUSUAL EVENT**

EAL:

Main Turbine rotating component failures resulting in **EITHER** of the following:

- Main Turbine casing penetration
- Main Turbine or Generator Seal Damage

Basis:

~~These~~ This EALs ~~are~~ is categorized on the basis of the occurrence of an event of sufficient magnitude to be of concern to plant operators.

~~EAL #4~~

This EAL addresses main turbine rotating component failures of sufficient magnitude to cause observable damage to the turbine casing or to the seals of the turbine generator. Generator seal damage observed after generator purge does not meet the intent of this EAL because it did not impact normal operation of the plant.

Of major concern is the potential for leakage of combustible fluids (lubricating oils) and gases (hydrogen cooling) to the plant environs. Actual fires and flammable gas build up are appropriately classified via EAL HU2.1 and EAL HU3.1.

This EAL is consistent with the definition of an UNUSUAL EVENT ~~NOUE~~ while maintaining the anticipatory nature desired and recognizing the risk to non-safety related equipment.

Escalation of this emergency classification level, if appropriate, would be to EAL HA1.3 based on damage done by projectiles generated by the failure or by any~~the~~ radiological releases in Category R. ~~for a BWR, or in conjunction with a steam generator tube rupture, for a PWR. These latter events would be classified by the radiological ICs or Fission Product Barrier ICs.~~

Explanation/Discussion/Definitions:

Main Turbine rotating component failures of sufficient magnitude to cause damage to the turbine casing or turbine/generator seals increases the potential for leakage of combustible/explosive gases and of combustible liquids to the Turbine Building or damage to plant systems due to **PROJECTILES**. The presence of H_2 gas in sufficient quantities may present a combustion hazard. Actual fires and flammable gas build up is classified under fire and flammable gas EALs.

Generator seal damage observed after generator purge does not meet the intent of this EAL since it did not impact normal plant operations.

Turbine rotating component failures may also result in other direct damage to plant systems and components. Damage may rupture the turbine lubricating oil system, which would release flammable liquids to the Turbine Building. Potential rupture of the condenser and condenser tubes may cause flooding in the lower levels of the Turbine Building. This damage should be readily observable.

Escape of H_2 gas from the generator due to a loss of seal oil pumps or turbine lube oil without a turbine rotating component failure should not be classified under this event but should be reviewed IAW EALs in Subcategory H.3, Hazardous Gas.

Definitions:

> **PROTECTED AREA (PA)**: A security controlled area within the **OWNER CONTROLLED AREA (OCA)** that is enclosed by the security perimeter fence and monitored by intrusion detection systems. Access to the **PA** requires proper security clearance and is controlled at the Security Center.
>
> **OWNER CONTROLLED AREA (OCA)**: Property owned, maintained and controlled by PSEG Nuclear as part of the Salem & Hope Creek Generating Station complex. For the purpose of emergency classification, area from the PSEG Nuclear access road checkpoint and inward towards the stations is considered the **OCA**.
>
> **PROJECTILE**: An object that impacts Salem and/or Hope Creek that could cause concern for continued operability, reliability or personnel safety.

EAL Bases Reference(s):

1. NEI 99-01, Rev. 05, HU1 Example EAL #4
2. UFSAR 3.5.4 Turbine Missile

EAL Category: C – Hazards & Other Conditions Affecting Plant Safety

EAL Subcategory: 1 – Natural & Destructive Phenomena

Initiating Condition: Natural or destructive phenomena affecting the **PROTECTED AREA**

Mode Applicability: All

EAL# & Classification Level: **HU1.4 – UNUSUAL EVENT**

EAL:

Internal **Flooding** that has the potential to affect safe shutdown systems or components required by Technical Specifications for the current operating mode in **ANY Table H-1** plant structure

Table H-1	**Plant Structures Containing Safe Shutdown Systems or Components**
	• Auxiliary Building • Service Water Intake Structure • Control Point Area • Inner/Outer Penetration Areas • Containment • Fuel Handling Building • Service Building • RWST, PWST, and AFWST Area

Basis:

~~These~~ This EAL~~s~~ ~~are~~ is categorized on the basis of the occurrence of an event of sufficient magnitude to be of concern to plant operators.

~~EAL #3~~

This EAL addresses the effect of internal flooding caused by events such as component failures, equipment misalignment, or outage activity mishaps.

~~[The site specific areas include those areas that contain systems required for safe shutdown of the plant, which are not designed to be partially or fully submerged. The plant's IPEEE may provide insight into areas to be considered when developing this EAL.]~~

Escalation of this emergency classification level, if appropriate, would be based ~~VISIBLE DAMAGE~~**on DEGRADED PERFORMANCE** via EAL HA1.4, or by other plant conditions.

Explanation/Discussion/Definitions:

Flooding as used in this EAL describes a condition where water is entering the room faster than installed equipment is capable of removal, resulting in a rise of water level within the room. Classification of this EAL should not be delayed while corrective actions are being taken to isolate the water source.

The Table H-1 Plant Structures Containing Safe Shutdown Systems or Components include those plant structures identified as Seismic Category I.

Flooding can occur from several sources including the Circulating Water System, Service Water System, Demineralized Water, Component Cooling Water, Fire Protection and Refueling Water Storage Tank.

Flooding is determined in these areas by visual report from staff or by confirmation of sump alarms. S1(S2).OP-AB.ZZ-0002 (Q) directs the operators to determine the exact location and severity of **flooding**. Attachments in this procedure delineate the affected plant areas, potential source(s) of water, affected vital equipment, flood rate and time to submerge vital equipment.

If mitigating actions to control flooding have been unsuccessful and the flooding level has reached 50% of the equipment disabled level(s) as specified in S1(S2).OP-AB.ZZ-0002, **FLOODING**, then the **flooding** is severe, is in excess of sump handling capability and has the potential to affect safety equipment and therefore, classification under this EAL is warranted. The source of the **flooding** and the status of the sump pumps are not factors in evaluating this EAL. For areas that do not have a **flooding** level specified in S1(S2).OP-AB.ZZ-0002, SM judgment should be used.

Definitions:

> **PROTECTED AREA (PA)**: A security controlled area within the **OWNER CONTROLLED AREA (OCA)** that is enclosed by the security perimeter fence and monitored by intrusion detection systems. Access to the **PA** requires proper security clearance and is controlled at the Security Center.
>
> **OWNER CONTROLLED AREA (OCA)**: Property owned, maintained and controlled by PSEG Nuclear as part of the Salem & Hope Creek Generating Station complex. For the purpose of emergency classification, area from the PSEG Nuclear access road checkpoint and inward towards the stations is considered the **OCA**.

DEGRADED PERFORMANCE: Assessment of degraded safe shutdown system performance includes examination of systems in standby status as well as those in operation. When a safe shutdown system is in operation, its performance can be directly observed and compared to its design capability (e.g., rated flow is required but cannot be achieved). When an operating safe shutdown system cannot fulfill its design function, its performance is degraded. When a safe shutdown system is in standby, its performance capability may not be readily determined. One or more of the following can provide indirect indication of its performance capability:

- Electrical faults on power supplies
- Normally closed breakers in tripped position
- System annunciators activated
- System warning lights lit
- Insufficient system pressure from keep-fill pumps
- Elevated area temperatures or radiation levels
- Increased sump pump operation in areas in which the system is located

EAL Bases Reference(s):

1. NEI 99-01, Rev. 05, HU1 Example EAL #3
2. UFSAR 3.2 Classification of Structures, Components and Systems
3. S1(S2).OP-AB.ZZ-0002 (Q) Flooding

This page intentionally blank

EAL Category: C – Hazards & Other Conditions Affecting Plant Safety

EAL Subcategory: 1 – Natural & Destructive Phenomena

Initiating Condition: Natural or destructive phenomena affecting the **PROTECTED AREA**

Mode Applicability: All

EAL# & Classification Level: **HU1.5 – UNUSUAL EVENT (Common Site)**

EAL:

River level **> 99.5'**

OR

River level **< 80.0'**

Basis:

~~This EAL addresses other site specific phenomena (such as hurricane, flood, or seiche) that can also be precursors of more serious events.~~See Explanation Section below:

Explanation/Discussion/Definitions:

The first condition of this EAL indicates river level conditions that can threaten the level of safety of the plant due to flooding. River level greater than **99.5'** (+10.5' Mean Sea Level, MSL) is indication of impending site flood conditions. Flood protection measures are required by Salem Technical Specifications and procedure at 99.5'(+10.5'MSL). At this river level precautionary actions are taken, including filling outside tanks and ensuring that perimeter flood doors are closed. These actions ensure that the facility flood protection features are in place prior to a river level that would necessitate their use. Hope Creek performs these actions at 95.0' (+6.0'MSL).

The High river level threshold is below the river level that would require a plant shutdown. Technical Specification actions required by a River Level of >100.5' includes placing the plant in at least Hot Standby within the next 6 hours and in Cold Shutdown within the next 30 hours. This is based on the river level at which facility flood protection features provide protection to safety related equipment. Hope Creek performs similar actions are at 99.5' (+10.5'MSL).

The grade level at the Salem station is lower than that for Hope Creek (Salem = **99.5'**, Hope Creek = 101.5').

The second condition of this EAL indicates river level conditions, River level < **80.0'** (-9.0'MSL), approaching the loss of the Service Water Intake (Ultimate Heat Sink). The low level threshold indicates a river level condition that is one foot lower than the historical low water level of 81.0' (-8.0'MSL) (December 31, 1962) and is higher than the Service Water pumps design level.

These events will be escalated based on damage to plant safety systems, loss of fission product barriers or abnormal radiological releases as discussed in other EAL categories.

River level indication is displayed in Unit 1 on LA-8639 which has a range of 70' to 110'.

The National Weather Service can be contacted for further information about existing or projected Adverse Weather Conditions:

- Phila/Mount Holly (609) 261-6600
- NWS Web site http://www.erh.noaa.gov/er/phi
- Phila/Mount Holly (609) 261-6604
- Phila/Mount Holly (609) 261-6602

Definitions:

PROTECTED AREA (PA): A security controlled area within the **OWNER CONTROLLED AREA (OCA)** that is enclosed by the security perimeter fence and monitored by intrusion detection systems. Access to the **PA** requires proper security clearance and is controlled at the Security Center.

OWNER CONTROLLED AREA (OCA): Property owned, maintained and controlled by PSEG Nuclear as part of the Salem & Hope Creek Generating Station complex. For the purpose of emergency classification, area from the PSEG Nuclear access road checkpoint and inward towards the stations is considered the **OCA**.

EAL Bases Reference(s):

1. NEI 99-01, Rev. 05, HU1 Example EAL #5
2. Technical Specifications 3/4.7.5 Flood Protection
3. UFSAR 2.4 Hydraulic Engineering
4. UFSAR Figure 2.4-3 Service Water Intake
5. UFSAR Figure 3.4-1 Datum and Water Level Relationships
6. S1(S2).OP-AB.CW-0001(Q) Circulating Water System Malfunction
7. S1(S2).OP-AB.ZZ-0002(Q) Flooding
8. OP-AA-108-111-1001 Severe Weather and National Disaster Guidelines

EAL Category: C – Hazards & Other Conditions Affecting Plant Safety

EAL Subcategory: 1 – Natural & Destructive Phenomena

Initiating Condition: Natural or destructive phenomena affecting **VITAL AREAS**

Mode Applicability: All

EAL# & Classification Level: **HA1.1 – ALERT**

EAL:

Actuation of the Hope Creek OBE Seismic Switch **(> 0.1g)** has occurred as verified by the Hope Creek Shift Manager

AND

Earthquake confirmed by **ANY** of the following:

- Earthquake felt in plant by Control Room Operators
- National Earthquake Information Center (NEIC) (Note 4)
- Control Room indication of **DEGRADED PERFORMANCE** of safe shutdown systems

Note 4: The NEIC can be contacted by calling (303) 273-8500. Select option #1 and inform the analyst you wish to confirm recent seismic activity in the vicinity of Salem/Hope Creek Generating Station. Provide the analyst with the following coordinates: 39° 27' 46" (39.465°) north latitude, 75° 32' 08" (75.537°) west longitude.

Basis:

~~These~~ This EAL~~s~~ escalates from HU1.1 in that the occurrence of the event ~~has~~ may have resulted in damage to plant structures or areas containing equipment necessary for a safe shutdown, or ~~has~~ may have caused damage to the safety systems in those structures evidenced by C~~c~~ontrol R~~r~~oom indications of degraded system response or performance. The occurrence of ~~visible~~ damage and/or degraded system response is intended to discriminate against lesser events. The initial report should not be interpreted as mandating a lengthy damage assessment prior to classification. No attempt is made in this EAL to assess the actual magnitude of the damage. The significance here is not that a particular system or structure was damaged, but rather, that the event was of sufficient magnitude to cause this degradation.

Escalation of this emergency classification level, if appropriate, would be based on System Malfunction ~~ICs~~EALs.

~~EALs #2 - #5~~

~~[These EALs should specify site specific structures or areas that contain safety system, or component and functions required for safe shutdown of the plant. Site specific Safe Shutdown Analysis should be consulted for equipment and plant areas required to establish or maintain safe shutdown.]~~

~~EAL #1~~

Seismic events of this magnitude can result in a **VITAL AREA** being subjected to forces beyond design limits, and thus damage may be assumed to have occurred to plant safety systems.

~~[This threshold should be based on site specific FSAR design basis. See EPRI-sponsored "Guidelines for Nuclear Plant Response to an Earthquake", dated October 1989, for information on seismic event categories.]~~

The National Earthquake Information Center can confirm if an earthquake has occurred in the area of the plant.

Explanation/Discussion/Definitions:

Ground motion acceleration of 0.1g is the Operating Basis Earthquake (OBE) for SGS.

As defined in the EPRI-sponsored Guidelines for Nuclear Plant Response to an Earthquake, dated October 1989, a "felt earthquake" is: An earthquake of sufficient intensity such that: (a) the vibratory ground motion is felt at the nuclear plant site and recognized as an earthquake based on a consensus of Control Room operators on duty at the time, and (b) for plants with operable seismic instrumentation, the seismic switches of the plant are activated.

The NEIC can confirm seismic activity in the vicinity of the SGS/HCGS site. Refer to Note 4 to contact the NEIC.

Alternatively go to the USGS NEIC website:

http://earthquake.usgs.gov/eqcenter/

On the US map, click on 'New Jersey' and then click on earthquake indicator for information. The maps are updated within 5 min. of a measured earthquake.

Additional Earthquake information can be found on the internet at:

- http://www.earthquake.usgs.gov

- http://www.mgs.md.gov (click on "Live Earthquake Data online")
- http://earthquake.usgs.gov/regional/neic

An approximate relationship between acceleration units in gravity and magnitude reported per the Richter scale is as follows:

An Acceleration of:	is approx. equal to a Richter Scale Magnitude of:
0.01g	4.0
0.02g	4.5
0.1g	5.5
0.2g	6.5

Definitions:

VITAL AREA: Typically any site specific areas, normally within the **PROTECTED AREA**, that contains equipment, systems, components, or material, the failure, destruction, or release of which could directly or indirectly endanger the public health and safety by exposure to radiation

DEGRADED PERFORMANCE: Assessment of degraded safe shutdown system performance includes examination of systems in standby status as well as those in operation. When a safe shutdown system is in operation, its performance can be directly observed and compared to its design capability (e.g., rated flow is required but cannot be achieved). When an operating safe shutdown system cannot fulfill its design function, its performance is degraded. When a safe shutdown system is in standby, its performance capability may not be readily determined. One or more of the following can provide indirect indication of its performance capability:

- Electrical faults on power supplies
- Normally closed breakers in tripped position
- System annunciators activated
- System warning lights lit
- Insufficient system pressure from keep-fill pumps
- Elevated area temperatures or radiation levels
- Increased sump pump operation in areas in which the system is located

PROTECTED AREA (PA): A security controlled area within the **OWNER CONTROLLED AREA (OCA)** that is enclosed by the security perimeter fence and monitored by intrusion detection systems. Access to the **PA** requires proper security clearance and is controlled at the Security Center.

OWNER CONTROLLED AREA (OCA): Property owned, maintained and controlled by PSEG Nuclear as part of the Salem & Hope Creek Generating Station complex. For the purpose of emergency classification, area from the PSEG Nuclear access road checkpoint and inward towards the stations is considered the **OCA**.

EAL Bases Reference(s):

1. NEI 99-01, Rev. 05, HA1 Example EAL #1
2. UFSAR Table 7.7-3 Seismic Monitoring Instrumentation
3. SC.OP-AB.ZZ-0004(Q) Earthquake
4. S1.OP-AR.ZZ-0001(Q) OHA A-37 SEIS RCDR SYS ACT
5. UFSAR 2.1.1 Site Location
6. UFSAR 1.2.4 Seismology

EAL Category: C – Hazards & Other Conditions Affecting Plant Safety

EAL Subcategory: 1 – Natural & Destructive Phenomena

Initiating Condition: Natural or destructive phenomena affecting **VITAL AREAS**

Mode Applicability: All

EAL# & Classification Level: **HA1.2 – ALERT**

EAL:

Tornado TOUCHING DOWN within the **PROTECTED AREA**

OR

Average Wind Speeds **> 95 MPH** from **ANY** elevation of the Met Tower

AND

Resulting in **EITHER** of the following:

- Control Room indication of **DEGRADED PERFORMANCE** of a Safety System
- **VISIBLE DAMAGE** to **ANY** of the **plant** structures in **Table H-1**

Table H-1 Plant Structures Containing Safe Shutdown Systems or Components
• Auxiliary Building • Service Water Intake Structure • Control Point Area • Inner/Outer Penetration Areas • Containment • Fuel Handling Building • Service Building • RWST, PWST, and AFWST Area

Basis:

This EAL escalates from EAL HU1.2 in that the occurrence of the event has resulted in **VISIBLE DAMAGE** to plant structures or areas containing equipment necessary for a safe shutdown, or has caused damage to the safety systems in those structures evidenced by C~~c~~ontrol R~~r~~oom indications of degraded system response or performance. The occurrence of **VISIBLE DAMAGE** and/or degraded system response is intended to discriminate against lesser events. The initial report should not be interpreted as mandating a lengthy damage assessment prior to classification. No attempt is made in this EAL to assess the actual magnitude of the damage. The significance here is not that a particular system or structure was damaged, but rather, that the event was of sufficient magnitude to cause this degradation.

Escalation of this emergency classification level, if appropriate, would be based on System Malfunction ~~ICs~~EALs.

~~EALs #2 - #5~~

~~[*These EALs should specify site specific structures or areas that contain safety system, or component and functions required for safe shutdown of the plant. Site-specific Safe Shutdown Analysis should be consulted for equipment and plant areas required to establish or maintain safe shutdown.*]~~

~~EAL #2~~

This EAL is based on a tornado ~~striking (~~touching down~~)~~ or high winds that have caused **VISIBLE DAMAGE** to structures containing functions or systems required for safe shutdown of the plant.

Explanation/Discussion/Definitions:

Average, as used in the EAL threshold, is intended to be the 15 minute rolling average as provided by SPDS and not the instantaneous wind speed.

The design wind velocities are 108 mph (including a gust factor of approximately 1.3) at 30 feet above ground. However, the Control Room wind speed only provides a display up to 100 mph so the classification threshold has been capped at 95 mph to allow for onscale indication of wind speed. The manner in which the HCGS SPDS processes data from the meteorological instrumentation differs from the SGS SPDS; consequently, minor differences between HCGS and SGS readings may occur.

The ALERT classification is appropriate if relevant plant parameters indicate that the performance of safety systems has been degraded. No attempt should be made to fully inventory the actual magnitude of the damage or quantify the degradation of safety system performance prior to declaration of an ALERT under this threshold. The declaration of an ALERT and the activation of the TSC provide the Emergency Coordinator with the resources needed to perform detailed damage assessments.

The National Weather Service can be contacted for further information about existing or projected Adverse Weather Conditions:

- Phila/Mount Holly (609) 261-6600
- NWS Web site http://www.erh.noaa.gov/er/phi
- Phila/Mount Holly (609) 261-6604
- Phila/Mount Holly (609) 261-6602

Definitions:

VITAL AREA: Typically any site specific areas, normally within the **PROTECTED AREA**, that contains equipment, systems, components, or material, the failure, destruction, or release of which could directly or indirectly endanger the public health and safety by exposure to radiation.

DEGRADED PERFORMANCE: Assessment of degraded safe shutdown system performance includes examination of systems in standby status as well as those in operation. When a safe shutdown system is in operation, its performance can be directly observed and compared to its design capability (e.g., rated flow is required but cannot be achieved). When an operating safe shutdown system cannot fulfill its design function, its performance is degraded. When a safe shutdown system is in standby, its performance capability may not be readily determined. One or more of the following can provide indirect indication of its performance capability:

- Electrical faults on power supplies
- Normally closed breakers in tripped position
- System annunciators activated
- System warning lights lit
- Insufficient system pressure from keep-fill pumps
- Elevated area temperatures or radiation levels
- Increased sump pump operation in areas in which the system is located

PROTECTED AREA (PA): A security controlled area within the **OWNER CONTROLLED AREA (OCA)** that is enclosed by the security perimeter fence and monitored by intrusion detection systems. Access to the **PA** requires proper security clearance and is controlled at the Security Center.

OWNER CONTROLLED AREA (OCA): Property owned, maintained and controlled by PSEG Nuclear as part of the Salem & Hope Creek Generating Station complex. For the purpose of emergency classification, area from the PSEG Nuclear access road checkpoint and inward towards the stations is considered the **OCA**.

VISIBLE DAMAGE: Damage to equipment or structure that is readily observable without measurements, testing, or analysis. Damage is sufficient to cause concern regarding the continued operability or reliability of the affected structure, system, or component. Example damage includes: deformation due to heat or impact, denting, penetration, rupture, cracking, and paint blistering. Surface blemishes (e.g., paint chipping, scratches) should not be included.

EAL Bases Reference(s):

1. NEI 99-01, Rev. 05, HA1 Example EAL #2
2. UFSAR 3.3.1.1 Design wind Velocity and Loading
3. UFSAR 3.2 Severe Weather and Natural Disaster Guidelines
4. OP-AA-108-111-1001 Severe Weather and Natural Disaster Guidelines
5. NC.CH-SC.MET-1206(Q) Meteorological Monitoring System Calibration and Maintenance
6. SC.OP-AB.ZZ-0001(Q) Adverse Environmental Conditions

EAL Category: C – Hazards & Other Conditions Affecting Plant Safety

EAL Subcategory: 1 – Natural & Destructive Phenomena

Initiating Condition: Natural or destructive phenomena affecting **VITAL AREAS**

Mode Applicability: All

EAL# & Classification Level: **HA1.3 – ALERT**

EAL:

Turbine failure-generated **PROJECTILES** resulting in **EITHER** of the following:

- **VISIBLE DAMAGE** to **ANY Table H-1** plant structures
- Control Room indication of **DEGRADED PERFORMANCE** of safe shutdown systems

Table H-1 Plant Structures Containing Safe Shutdown Systems or Components
• Auxiliary Building • Service Water Intake Structure • Control Point Area • Inner/Outer Penetration Areas • Containment • Fuel Handling Building • Service Building • RWST, PWST, and AFWST Area

Basis:

~~These~~ This EAL~~s~~ escalates from EAL HU1.3 in that the occurrence of the event has resulted in **VISIBLE DAMAGE** to plant structures or areas containing equipment necessary for a safe shutdown, or has caused damage to the safety systems in those structures evidenced by C~~c~~ontrol R~~r~~oom indications of degraded system response or performance. The occurrence of **VISIBLE DAMAGE** and/or degraded system response is intended to discriminate against lesser events. The initial report should not be interpreted as mandating a lengthy damage assessment prior to classification. No attempt is made in this EAL to assess the actual

magnitude of the damage. The significance here is not that a particular system or structure was damaged, but rather, that the event was of sufficient magnitude to cause this degradation.

Escalation of this emergency classification level, if appropriate, would be based on System Malfunction ~~ICs~~EALs.

~~EALs #2 - #5~~

~~[*These EALs should specify site specific structures or areas that contain safety system, or component and functions required for safe shutdown of the plant. Site specific Safe Shutdown Analysis should be consulted for equipment and plant areas required to establish or maintain safe shutdown.*]~~

~~EAL #4~~

This EAL addresses the threat to safety related equipment imposed by **PROJECTILES** generated by main turbine rotating component failures. Therefore, this EAL is consistent with the definition of an ALERT in that the potential exists for actual or substantial potential degradation of the level of safety of the plant.

Explanation/Discussion/Definitions:

Definitions:

> **VITAL AREA**: Typically any site specific areas, normally within the **PROTECTED AREA**, that contains equipment, systems, components, or material, the failure, destruction, or release of which could directly or indirectly endanger the public health and safety by exposure to radiation.
>
> **DEGRADED PERFORMANCE**: Assessment of degraded safe shutdown system performance includes examination of systems in standby status as well as those in operation. When a safe shutdown system is in operation, its performance can be directly observed and compared to its design capability (e.g., rated flow is required but cannot be achieved). When an operating safe shutdown system cannot fulfill its design function, its performance is degraded. When a safe shutdown system is in standby, its performance capability may not be readily determined. One or more of the following can provide indirect indication of its performance capability:
>
> - Electrical faults on power supplies
> - Normally closed breakers in tripped position
> - System annunciators activated
> - System warning lights lit
> - Insufficient system pressure from keep-fill pumps

- Elevated area temperatures or radiation levels
- Increased sump pump operation in areas in which the system is located

PROTECTED AREA (PA): A security controlled area within the **OWNER CONTROLLED AREA (OCA)** that is enclosed by the security perimeter fence and monitored by intrusion detection systems. Access to the **PA** requires proper security clearance and is controlled at the Security Center.

OWNER CONTROLLED AREA (OCA): Property owned, maintained and controlled by PSEG Nuclear as part of the Salem & Hope Creek Generating Station complex. For the purpose of emergency classification, area from the PSEG Nuclear access road checkpoint and inward towards the stations is considered the **OCA**.

VISIBLE DAMAGE: Damage to equipment or structure that is readily observable without measurements, testing, or analysis. Damage is sufficient to cause concern regarding the continued operability or reliability of the affected structure, system, or component. Example damage includes: deformation due to heat or impact, denting, penetration, rupture, cracking, and paint blistering. Surface blemishes (e.g., paint chipping, scratches) should not be included.

PROJECTILE: An object that impacts Salem and/or Hope Creek that could cause concern for continued operability, reliability or personnel safety.

EAL Bases Reference(s):

1. NEI 99-01, Rev. 05, HA1 Example EAL #4
2. UFSAR 3.5.4 Turbine Missiles

This page intentionally blank

EAL Category: C – Hazards & Other Conditions Affecting Plant Safety

EAL Subcategory: 1 – Natural & Destructive Phenomena

Initiating Condition: Natural or destructive phenomena affecting **VITAL AREAS**

Mode Applicability: All

EAL# & Classification Level: **HA1.4 – ALERT**

EAL:

Internal **Flooding** in **ANY** **Table H-1** plant structure

AND

The **Flooding** is of a magnitude that results in **EITHER** of the following:

- Indication of **DEGRADED PERFORMANCE** of a **Safety System** within a **Table H-1** Structure.
- An Industrial Safety Hazard (Electrical Shock, High Temp, etc.) resulting in access restrictions to operate or monitor **Safety System** equipment.

Table H-1 Plant Structures Containing Safe Shutdown Systems or Components
• Auxiliary Building • Service Water Intake Structure • Control Point Area • Inner/Outer Penetration Areas • Containment • Fuel Handling Building • Service Building • RWST, PWST, and AFWST Area

Basis:

~~These~~ This EAL~~s~~ escalates from EAL HU1.4 in that the occurrence of the event has resulted in ~~VISIBLE DAMAGE to plant structures or areas containing equipment necessary for a safe~~

~~shutdown, or has caused~~ an electrical shock hazard precluding access to plant structures containing safe shutdown systems or components or damage to the safety systems or components in those structures as evidenced by C~~c~~ontrol R~~r~~oom indications of degraded system response or performance. The lack of access or occurrence of ~~VISIBLE DAMAGE and/or~~ degraded system response is intended to discriminate against lesser events. The initial report should not be interpreted as mandating a lengthy ~~damage~~ assessment prior to classification. No attempt is made in this EAL to assess the actual magnitude of ~~the~~ any damage. The significance here is not that a particular system or structure was damaged, but rather, that the event was of sufficient magnitude to cause this lack of access or performance degradation.

Escalation of this emergency classification level, if appropriate, would be based on System Malfunction ~~ICs~~EALs.

~~EALs #2 - #5~~

~~[These EALs should specify site specific structures or areas that contain safety system, or component and functions required for safe shutdown of the plant. Site specific Safe Shutdown Analysis should be consulted for equipment and plant areas required to establish or maintain safe shutdown.]~~

~~EAL #3~~

This EAL addresses the effect of internal flooding caused by events such as component failures, equipment misalignment, or outage activity mishaps. It is based on the **DEGRADED PERFORMANCE** of systems, or has created industrial safety hazards (e.g., electrical shock) that preclude necessary access to operate or monitor safety equipment. The inability to access, operate or monitor safety equipment represents an actual or substantial potential degradation of the level of safety of the plant.

Flooding as used in this EAL describes a condition where water is entering the room faster than installed equipment is capable of removal, resulting in a rise of water level within the room. Classification of this EAL should not be delayed while corrective actions are being taken to isolate the water source.

Explanation/Discussion/Definitions:

Flooding is an event or condition in excess of the available sump pump handling capability (installed or temporary) that results in a condition where water is entering a room faster than it is being removed resulting in a rise in water level within the room. Classification should not be delayed while taking corrective actions to isolate the source of the **flooding**. This EAL addresses the effects of **flooding** caused by events such as component failures, equipment misalignment, or outage activity mishaps where flooding is occurring in areas that affect safety related equipment. This EAL is based on the degraded performance of systems, or has created industrial safety hazards (electrical shock) that preclude necessary access to operate or monitor safety equipment. The inability to access, operate or monitor safety equipment

represents an actual or substantial potential degradation of the level of safety of the plant meeting the definition of an ALERT.

In those cases where it is believed that **DEGRADED PERFORMANCE** due to **flooding** may have caused damage to a Safety System, an ALERT declaration is warranted since the full extent of the damage need not be known. A Safety System is defined as any system required to maintain safe operation or to establish or maintain Cold Shutdown.

If the **flooding** has reached the level(s) specified in OP-AB.ZZ-0002, FLOODING, then the flooding is severe, is in excess of sump handling capability and has degraded the performance of safety related equipment. Consequently, if the flooding has reached the levels specified in OP-AB.ZZ-0002, **Flooding**, then classification under this EAL is warranted. The source of the flooding and the status of the sump pumps are not factors in evaluating this EAL. For areas that do not have a **Flooding** level specified in OP-AB.ZZ-0002, SM judgment should be used.

Flooding is determined in these areas by visual report from staff or by confirmation of sump alarms. S1(S2).OP-AB.ZZ-0002 (Q) directs the operators to determine the exact location and severity of **Flooding**. Attachments in this procedure delineate the affected plant areas, potential source(s) of water, affected vital equipment, flood rate and time to submerge vital equipment.

Definitions:

VITAL AREA: Typically any site specific areas, normally within the **PROTECTED AREA**, that contains equipment, systems, components, or material, the failure, destruction, or release of which could directly or indirectly endanger the public health and safety by exposure to radiation.

DEGRADED PERFORMANCE: Assessment of degraded safe shutdown system performance includes examination of systems in standby status as well as those in operation. When a safe shutdown system is in operation, its performance can be directly observed and compared to its design capability (e.g., rated flow is required but cannot be achieved). When an operating safe shutdown system cannot fulfill its design function, its performance is degraded. When a safe shutdown system is in standby, its performance capability may not be readily determined. One or more of the following can provide indirect indication of its performance capability:

- Electrical faults on power supplies
- Normally closed breakers in tripped position
- System annunciators activated
- System warning lights lit
- Insufficient system pressure from keep-fill pumps

- Elevated area temperatures or radiation levels
- Increased sump pump operation in areas in which the system is located

PROTECTED AREA (PA): A security controlled area within the **OWNER CONTROLLED AREA (OCA)** that is enclosed by the security perimeter fence and monitored by intrusion detection systems. Access to the **PA** requires proper security clearance and is controlled at the Security Center.

OWNER CONTROLLED AREA (OCA): Property owned, maintained and controlled by PSEG Nuclear as part of the Salem & Hope Creek Generating Station complex. For the purpose of emergency classification, area from the PSEG Nuclear access road checkpoint and inward towards the stations is considered the **OCA**.

EAL Bases Reference(s):

1. NEI 99-01, Rev. 05, HA1 Example EAL #3
2. UFSAR 3.2 Classification of Structures, Components and Systems
3. S1(S2).OP-AB.ZZ-0002 (Q) Flooding

EAL Category: C – Hazards & Other Conditions Affecting Plant Safety

EAL Subcategory: 1 – Natural & Destructive Phenomena

Initiating Condition: Natural or destructive phenomena affecting **VITAL AREAS**

Mode Applicability: All

EAL# & Classification Level: **HA1.6 – ALERT**

EAL:

Vehicle Crash or **PROJECTILE** Impact with or within **ANY** **Table H-1** Structure

AND

The Vehicle Crash or **PROJECTILE** Impact results in **EITHER** of the following:

- Control Room indication of **DEGRADED PERFORMANCE** of a **Safety System** within **Table H-1** Structure
- **VISIBLE DAMAGE** to **ANY** of the **plant** structures in **Table H-1**

Table H-1 Plant Structures Containing Safe Shutdown Systems or Components
• Auxiliary Building • Service Water Intake Structure • Control Point Area • Inner/Outer Penetration Areas • Containment • Fuel Handling Building • Service Building • RWST, PWST, and AFWST Area

Basis:

~~These EALs escalate from HU1 in that the occurrence of the event has resulted in VISIBLE DAMAGE to plant structures or areas containing equipment necessary for a safe shutdown, or has caused damage to the safety systems in those structures evidenced by control room~~

~~indications of degraded system response or performance.~~ The occurrence of **VISIBLE DAMAGE** and/or degraded system response is intended to discriminate against lesser events. The initial report should not be interpreted as mandating a lengthy damage assessment prior to classification. No attempt is made in this EAL to assess the actual magnitude of the damage. The significance here is not that a particular system or structure incurred damage, but rather that the event was of sufficient magnitude to cause either **VISIBLE DAMAGE** to the safety systems in Table H-1 structures or Control Room indications of degraded system performance.~~The~~[MCD1] ~~significance here is not that a particular system or structure was damaged, but rather, that the event was of sufficient magnitude to cause this degradation.~~

Escalation of this emergency classification level, if appropriate, would be based on EALs in Category S, System Malfunctions~~ICs~~.

~~EALs #2 - #5~~

~~[*These EALs should specify site specific structures or areas that contain safety system, or component and functions required for safe shutdown of the plant. Site specific Safe Shutdown Analysis should be consulted for equipment and plant areas required to establish or maintain safe shutdown.*]~~

~~EAL #5~~

This EAL addresses vehicle crashes or **PROJECTILE** impacts within the **PROTECTED AREA** that results in **VISIBLE DAMAGE** to **VITAL AREAS** or indication of damage to safety structures, systems, or components containing functions and systems required for safe shutdown of the plant.

Explanation/Discussion/Definitions:

The primary concern in this EAL is the magnitude of the vehicle crashes/ **PROJECTILE** impacts. A detailed assessment of system damage is not required prior to classification. Vehicle Crash includes **AIRCRAFT**, Helicopters, Ships, Barges, Trucks, Autos, or any other vehicle types of sufficient momentum to potentially damage the structure. Minor contacts (not crashes) by onsite vehicles such as trucks, autos, forklifts, etc., are excluded from classification under this EAL. **PROJECTILE** impact includes flying objects from either offsite or onsite, rotating equipment or turbine failure causing turbine-casing penetration.

A Safety System is any system required to maintain safe operation or to establish or maintain cold shutdown. In those cases where it is believed that the vehicle crash/ **PROJECTILE** impact may have caused **VISIBLE DAMAGE** to a Safety System, an ALERT declaration is warranted since the full extent of the damage may not be known. The turbine building is not a safety structure and would not be considered for this EAL.

No lengthy or time-consuming assessment of damage is required prior to classification. In this EAL, no attempt is made to quantify the magnitude of the damage to any safety system but

instead an attempt is made to identify any damage in order to quantify the magnitude and extent of the vehicle crashes/**PROJECTILE** impact.

In short, if the vehicle crash/ **PROJECTILE** impact is big enough that it has damaged a Safety System/Safety Structure or cause Safety System DEGRADED PERFORMANCE, then the vehicle crash/ **PROJECTILE** impact is big enough to justify an ALERT declaration.

Any security aspects or suspected **HOSTILE ACTIONS** that involve vehicles or **PROJECTILE** impact should be considered under EALs in Subcategory H.4.

This event will be escalated based on further damage to plant safety systems, fission product barriers, or abnormal radiation releases. The Emergency Coordinator may use discretion and escalate the classification to a SITE AREA EMERGENCY based on the nature of the damage.

Definitions:

VITAL AREA: Typically any site specific areas, normally within the **PROTECTED AREA**, that contains equipment, systems, components, or material, the failure, destruction, or release of which could directly or indirectly endanger the public health and safety by exposure to radiation.

PROJECTILE: An object that impacts Salem and/or Hope Creek that could cause concern for continued operability, reliability, or personnel safety.

DEGRADED PERFORMANCE: Assessment of degraded safe shutdown system performance includes examination of systems in standby status as well as those in operation. When a safe shutdown system is in operation, its performance can be directly observed and compared to its design capability (e.g., rated flow is required but cannot be achieved). When an operating safe shutdown system cannot fulfill its design function, its performance is degraded. When a safe shutdown system is in standby, its performance capability may not be readily determined. One or more of the following can provide indirect indication of its performance capability:

- Electrical faults on power supplies
- Normally closed breakers in tripped position
- System annunciators activated
- System warning lights lit
- Insufficient system pressure from keep-fill pumps
- Elevated area temperatures or radiation levels
- Increased sump pump operation in areas in which the system is located

PROTECTED AREA (PA): A security controlled area within the **OWNER CONTROLLED AREA (OCA)** that is enclosed by the security perimeter fence and monitored by intrusion detection systems. Access to the **PA** requires proper security clearance and is controlled at the Security Center.

OWNER CONTROLLED AREA (OCA): Property owned, maintained and controlled by PSEG Nuclear as part of the Salem & Hope Creek Generating Station complex. For the purpose of emergency classification, area from the PSEG Nuclear access road checkpoint and inward towards the stations is considered the **OCA**.

VISIBLE DAMAGE: Damage to equipment or structure that is readily observable without measurements, testing, or analysis. Damage is sufficient to cause concern regarding the continued operability or reliability of the affected structure, system, or component. Example damage includes: deformation due to heat or impact, denting, penetration, rupture, cracking, and paint blistering. Surface blemishes (e.g., paint chipping, scratches) should not be included.

AIRCRAFT: Includes both small and large **AIRCRAFT**. Examples of **AIRCRAFT** include general aviation Cessna, Piper and Lear type private planes, large passenger or freight planes as well as police, medical and media helicopters.

HOSTILE ACTION: An act toward Salem or Hope Creek or its personnel that includes the use of violent force to destroy equipment, take **HOSTAGES**, and/or intimidate PSEG to achieve an end. This includes attack by air, land, or water using guns, explosives, **PROJECTILE**s, vehicles, or other devices used to deliver destructive force. Other acts that satisfy the overall intent may be included. **HOSTILE ACTION** should not be construed to include acts of civil disobedience or felonious acts that are not part of a concerted attack on Salem or Hope Creek. Non-terrorism-based EALs should be used to address such activities (i.e., this may include violent acts between individuals in the **OCA**).

HOSTAGE: A person(s) held as leverage against the station to ensure that demands will be met by the station.

EAL Bases Reference(s):

1. NEI 99-01, Rev. 05, HA1 Example EAL #5
2. UFSAR 3.2 Classification of Structures, Components and Systems

EAL Category: ~~C~~ H – Hazards & Other Conditions Affecting Plant Safety

EAL Subcategory: 2 – Fire or Explosion

Initiating Condition: **FIRE** within the **PROTECTED AREA** not extinguished within **15 minutes** of detection or **EXPLOSION** within the **PROTECTED AREA**

Mode Applicability: All

EAL# & Classification Level: **HU2.1 – UNUSUAL EVENT**

EAL:

FIRE NOT extinguished within **15 minutes** of **EITHER** of the following:

- Control Room notification/report of a **FIRE**
- Verified **FIRE** detection system alarm/actuation

AND

FIRE is located in the Turbine Building or **ANY Table H-1** plant structure (Note 3)

Note 3: The Emergency Coordinator should NOT wait until the applicable time has elapsed, but should declare the event as soon as it is determined that the condition will likely exceed the applicable time.

Table H-1 Plant Structures Containing Safe Shutdown Systems or Components
• Auxiliary Building • Service Water Intake Structure • Control Point Area • Inner/Outer Penetration Areas • Containment • Fuel Handling Building • Service Building • RWST, PWST, and AFWST Area

Basis:

This EAL addresses the magnitude and extent of **FIRES** ~~or EXPLOSIONS~~ that may be potentially significant precursors of damage to safety systems. It addresses the **FIRE** ~~/ EXPLOSION~~, and not the degradation in performance of affected systems that may result.

~~As used here, detection is visual observation and report by plant personnel or sensor alarm indication.~~

~~EAL #1~~

~~The 15 minute time period begins with a credible notification that a FIRE is occurring, or indication of a FIRE detection system alarm/actuation. Verification of a FIRE detection system alarm/actuation includes actions that can be taken within the control room or other nearby site specific location to ensure that it is not spurious. An alarm is assumed to be an indication of a FIRE unless it is disproved within the 15 minute period by personnel dispatched to the scene. In other words, a personnel report from the scene may be used to disprove a sensor alarm if received within 15 minutes of the alarm, but shall not be required to verify the alarm.~~

The 15 minute time period begins with a credible notification/report that a **FIRE** is occurring, or upon verification that a **FIRE** detection system alarm/actuation is due to a **FIRE**.

a. A credible notification/report to the Control room would be a communications from a member of the plant staff (in-house or contractor) that identifies the observation of a **FIRE** in a specific location.

   NOTE: In this case, the **15 minute** clock to assess the EAL and to extinguish the **FIRE** runs concurrently and starts upon Control Room receipt of the **FIRE** notification/report.

b. Verification that a **FIRE** detection system alarm/actuation is due to a **FIRE** (not a spurious/false alarm) includes either one of the following:

   1. Control Room (or other nearby site-specific location) receipt of related independent alarm(s) (**FIRE**, temperature, deluge, **FIRE** pump start, etc.)

      NOTE: In this case, the **15 minute** clock to assess the EAL and to extinguish the **FIRE** runs concurrently and starts upon receipt of the independent alarm(s) related to the **FIRE**.

   2. On/Near-scene visual confirmation if only a single **FIRE**/smoke detector has alarmed.

      NOTE: In this case, the **15 minute** clock to assess the EAL and to extinguish the **FIRE** runs concurrently and starts upon an on/near-scene confirmation of a **FIRE** related to the single **FIRE**/smoke detector that had alarmed.

The intent of this **15 minute** duration is to size the **FIRE** and to discriminate against small **FIRES** that are readily extinguished (e.g., smoldering waste paper basket).

[The ~~site specific~~Turbine Building and Table H-1 list ~~should be~~is limited and applies to buildings and areas in actual contact with or immediately adjacent to **VITAL AREAS** or other significant buildings or areas. The intent of this ~~IC~~ EAL is not to include buildings (i.e., warehouses) or areas that are not in actual contact with or immediately adjacent to **VITAL AREAS**. This excludes **FIRES** within administration buildings, waste-basket **FIRES**, and other small **FIRES** of no safety consequence. Immediately adjacent implies that the area immediately adjacent contains or may contain equipment or cabling that could impact equipment located in **VITAL AREAS** or the **FIRE** could damage equipment inside **VITAL AREAS** or that precludes access to **VITAL AREAS**.]

~~EAL #2~~

~~This EAL addresses only those EXPLOSIONS of sufficient force to damage permanent structures or equipment within the PROTECTED AREA.~~

~~No attempt is made to assess the actual magnitude of the damage. The occurrence of the EXPLOSION is sufficient for declaration.~~

~~The Emergency director also needs to consider any security aspects of the EXPLOSION, if applicable.~~

Escalation of this emergency classification level, if appropriate, would be based on EAL HA2.1.

Explanation/Discussion/Definitions:

The Table H-1 Plant Structures Containing Safe Shutdown Systems or Components include those plant structures identified as Seismic Category I.

Definitions:

PROTECTED AREA (PA): A security controlled area within the **OWNER CONTROLLED AREA (OCA)** that is enclosed by the security perimeter fence and monitored by intrusion detection systems. Access to the **PA** requires proper security clearance and is controlled at the Security Center.

OWNER CONTROLLED AREA (OCA): Property owned, maintained and controlled by PSEG Nuclear as part of the Salem & Hope Creek Generating Station complex. For the purpose of emergency classification, area from the PSEG Nuclear access road checkpoint and inward towards the stations is considered the **OCA**.

VITAL AREA: Typically any site specific areas, normally within the **PROTECTED AREA**, that contains equipment, systems, components, or material, the failure, destruction, or release of which could directly or indirectly endanger the public health and safety by exposure to radiation.

FIRE: Combustion characterized by heat and light. Sources of smoke such as slipping drive belts or overheated electrical equipment do not constitute **FIRES**. Observation of flame is preferred but is NOT required if large quantities of smoke and heat are observed.

EXPLOSION: A rapid, violent, unconfined combustion, or catastrophic failure of pressurized/energized equipment that imparts energy of sufficient force to potentially damage permanent structures, systems, or components.

EAL Bases Reference(s):

1. NEI 99-01, Rev. 05, HU2 Example EAL #1
2. UFSAR 3.2 Classification of Structures, Components and Systems

This page intentionally blank

EAL Category: ~~C~~ H – Hazards & Other Conditions Affecting Plant Safety

EAL Subcategory: 2 – Fire or Explosion

Initiating Condition: **FIRE** within the **PROTECTED AREA** not extinguished within 15 minutes of detection or **EXPLOSION** within the **PROTECTED AREA**

Mode Applicability: All

EAL# & Classification Level: **HU2.2 – UNUSUAL EVENT**

EAL:

EXPLOSION within the **PROTECTED AREA**

Basis:

This EAL addresses the magnitude and extent of ~~FIRES or~~ **EXPLOSIONS** that may be potentially significant precursors of damage to safety systems. It addresses the ~~**FIRE /**~~ **EXPLOSION**, and not the degradation in performance of affected systems that may result.

~~As used here, detection is visual observation and report by plant personnel or sensor alarm indication.~~

~~EAL #1~~

~~The 15 minute time period begins with a credible notification that a FIRE is occurring, or indication of a fire detection system alarm/actuation. Verification of a fire detection system alarm/actuation includes actions that can be taken within the control room or other nearby site specific location to ensure that it is not spurious. An alarm is assumed to be an indication of a FIRE unless it is disproved within the 15 minute period by personnel dispatched to the scene. In other words, a personnel report from the scene may be used to disprove a sensor alarm if received within 15 minutes of the alarm, but shall not be required to verify the alarm.~~

~~The intent of this 15 minute duration is to size the FIRE and to discriminate against small FIRES that are readily extinguished (e.g., smoldering waste paper basket).~~

~~[*The site specific list should be limited and applies to buildings and areas in actual contact with or immediately adjacent to VITAL AREAS or other significant buildings or areas. The intent of this IC is not to include buildings (i.e., warehouses) or areas that are not in actual contact with or immediately adjacent to VITAL AREAS. This excludes FIRES within administration buildings, waste-basket FIRES, and other small FIRES of no safety consequence. Immediately adjacent implies that the area immediately adjacent contains or may contain*~~

~~equipment or cabling that could impact equipment located in VITAL AREAS or the fire could damage equipment inside VITAL AREAS or that precludes access to VITAL AREAS.~~]

~~EAL #2~~

This EAL addresses only those **EXPLOSIONS** of sufficient force to damage permanent structures or equipment within the **PROTECTED AREA**.

No attempt is made to assess the actual magnitude of the damage. The occurrence of the **EXPLOSION** is sufficient for declaration.

The Emergency ~~director~~ Coordinator also needs to consider any security aspects of the **EXPLOSION**, if applicable.

Escalation of this emergency classification level, if appropriate, would be based on EAL HA2.2.

Explanation/Discussion/Definitions:

If the **EXPLOSION** is determined to be hostile in nature, the event is classified under EAL HS4.1.

Definitions:

PROTECTED AREA (PA): A security controlled area within the **OWNER CONTROLLED AREA (OCA)** that is enclosed by the security perimeter fence and monitored by intrusion detection systems. Access to the **PA** requires proper security clearance and is controlled at the Security Center.

OWNER CONTROLLED AREA (OCA): Property owned, maintained and controlled by PSEG Nuclear as part of the Salem & Hope Creek Generating Station complex. For the purpose of emergency classification, area from the PSEG Nuclear access road checkpoint and inward towards the stations is considered the **OCA**.

FIRE: Combustion characterized by heat and light. Sources of smoke such as slipping drive belts or overheated electrical equipment do not constitute **FIRES**. Observation of flame is preferred but is NOT required if large quantities of smoke and heat are observed.

EXPLOSION: A rapid, violent, unconfined combustion, or catastrophic failure of pressurized/energized equipment that imparts energy of sufficient force to potentially damage permanent structures, systems, or components.

EAL Bases Reference(s):

1. NEI 99-01, Rev. 05, HU2 Example EAL #2

EAL Category: ~~C~~ H – Hazards & Other Conditions Affecting Plant Safety

EAL Subcategory: 2 – Fire or Explosion

Initiating Condition: **FIRE** or **EXPLOSION** in a **VITAL AREA** affecting the operability of plant safety systems required to establish or maintain safe shutdown

Mode Applicability: All

EAL# & Classification Level: **HA2.1 – ALERT**

EAL:

FIRE in **ANY Table H-1** plant structure affecting the operability of plant safety systems required to establish or maintain safe shutdown

AND

≥ 15 minutes have elapsed (Note 3)

Note 3: The Emergency Coordinator should NOT wait until the applicable time has elapsed, but should declare the event as soon as it is determined that the condition will likely exceed the applicable time.

Table H-1 Plant Structures Containing Safe Shutdown Systems or Components
• Auxiliary Building • Service Water Intake Structure • Control Point Area • Inner/Outer Penetration Areas • Containment • Fuel Handling Building • Service Building • RWST, PWST, and AFWST Area

Basis:

~~**VISIBLE DAMAGE** is used to identify the magnitude of the fire or explosion and to discriminate against minor fires and explosions.~~

~~The reference to structures containing safety systems or components is included to discriminate against **FIRES or explosions** in areas having a low probability of affecting safe operation.~~ The significance here is ~~not that a safety system was degraded but the fact~~ that the **FIRE** ~~or **EXPLOSION**~~ was large enough to cause damage to these systems.

~~The use of **VISIBLE DAMAGE** should not be interpreted as mandating a lengthy damage assessment prior to classification.~~ The declaration of an ALERT and the activation of the Technical Support Center will provide the Emergency ~~Director~~ Coordinator with the resources needed to perform detailed damage assessments.

~~The Emergency Director also needs to consider any security aspects of the **EXPLOSION**.~~

~~[*This EAL should specify site specific structures or areas that contain safety system, or component and functions required for safe shutdown of the plant. Site specific Safe Shutdown Analysis should be consulted for equipment and plant areas required to establish or maintain safe shutdown.*]~~

Escalation of this emergency classification level, if appropriate, will be based on EALs in Category S, System Malfunctions, Category F, Fission Product Barrier Degradation, or Category R, Abnormal Rad Levels / Rad ~~iological~~ Effluent ~~ICs~~.

Explanation/Discussion/Definitions:

The Table H-1 Plant Structures Containing Safe Shutdown Systems or Components include those plant structures identified as Seismic Category I.

Definitions:

FIRE: Combustion characterized by heat and light. Sources of smoke such as slipping drive belts or overheated electrical equipment do not constitute **FIRES**. Observation of flame is preferred but is NOT required if large quantities of smoke and heat are observed.

EXPLOSION: A rapid, violent, unconfined combustion, or catastrophic failure of pressurized/energized equipment that imparts energy of sufficient force to potentially damage permanent structures, systems, or components.

VITAL AREAS: Typically any site specific areas, normally within the **PROTECTED AREA**, that contains equipment, systems, components, or material, the failure,

destruction, or release of which could directly or indirectly endanger the public health and safety by exposure to radiation

PROTECTED AREA (PA): A security controlled area within the **OWNER CONTROLLED AREA (OCA)** that is enclosed by the security perimeter fence and monitored by intrusion detection systems. Access to the **PA** requires proper security clearance and is controlled at the Security Center.

OWNER CONTROLLED AREA (OCA): Property owned, maintained and controlled by PSEG Nuclear as part of the Salem & Hope Creek Generating Station complex. For the purpose of emergency classification, area from the PSEG Nuclear access road checkpoint and inward towards the stations is considered the **OCA**.

EAL Bases Reference(s):

1. NEI 99-01, Rev. 05, HA2 Example EAL #1
2. UFSAR 3.2 Classification of Structures, Components and Systems

This page intentionally blank

EAL Category: ~~C~~ H – Hazards & Other Conditions Affecting Plant Safety

EAL Subcategory: 2 – Fire or Explosion

Initiating Condition: **FIRE** or **EXPLOSION** in a **VITAL AREA** affecting the operability of plant safety systems required to establish or maintain safe shutdown

Mode Applicability: All

EAL# & Classification Level: **HA2.2 – ALERT**

EAL:

EXPLOSION in **ANY Table H-1** plant structure affecting the operability of plant safety systems required to establish or maintain safe shutdown

Table H-1 Plant Structures Containing Safe Shutdown Systems or Components
• Auxiliary Building • Service Water Intake Structure • Control Point Area • Inner/Outer Penetration Areas • Containment • Fuel Handling Building • Service Building • RWST, PWST, and AFWST Area

Basis:

~~VISIBLE DAMAGE is used to identify the magnitude of the fire or explosion and to discriminate against minor fires and explosions.~~

~~The reference to structures containing safety systems or components is included to discriminate against **FIRES or explosions** in areas having a low probability of affecting safe operation.~~ The significance here is ~~not that a safety system was degraded but the fact~~ that the ~~FIRE or~~ **EXPLOSION** was large enough to cause damage to these systems.

~~The use of **VISIBLE DAMAGE** should not be interpreted as mandating a lengthy damage assessment prior to classification.~~ The declaration of an ALERT and the activation of the Technical Support Center will provide the Emergency ~~Director~~ Coordinator with the resources needed to perform detailed damage assessments.

The Emergency Coordinator ~~Director~~ also needs to consider any security aspects of the **EXPLOSION**.

~~[*This EAL should specify site specific structures or areas that contain safety system, or component and functions required for safe shutdown of the plant. Site specific Safe Shutdown Analysis should be consulted for equipment and plant areas required to establish or maintain safe shutdown.*]~~

Escalation of this emergency classification level, if appropriate, will be based on EALs in Category S, System Malfunctions, Category F, Fission Product Barrier Degradation, or Category R, Abnormal Rad Levels / Rad ~~iological~~ Effluent ~~ICs~~.

Explanation/Discussion/Definitions:

If the **EXPLOSION** is determined to be hostile in nature, the event is classified under EAL HS4.1.

The Table H-1 Plant Structures Containing Safe Shutdown Systems or Components include those plant structures identified as Seismic Category I.

Definitions:

FIRE: Combustion characterized by heat and light. Sources of smoke such as slipping drive belts or overheated electrical equipment do not constitute **FIRES**. Observation of flame is preferred but is NOT required if large quantities of smoke and heat are observed.

EXPLOSION: A rapid, violent, unconfined combustion, or catastrophic failure of pressurized/energized equipment that imparts energy of sufficient force to potentially damage permanent structures, systems, or components.

VITAL AREAS: Typically any site specific areas, normally within the **PROTECTED AREA**, that contains equipment, systems, components, or material, the failure, destruction, or release of which could directly or indirectly endanger the public health and safety by exposure to radiation.

PROTECTED AREA (PA): A security controlled area within the **OWNER CONTROLLED AREA (OCA)** that is enclosed by the security perimeter fence and monitored by intrusion detection systems. Access to the **PA** requires proper security clearance and is controlled at the Security Center.

OWNER CONTROLLED AREA (OCA): Property owned, maintained and controlled by PSEG Nuclear as part of the Salem & Hope Creek Generating Station complex. For the purpose of emergency classification, area from the PSEG Nuclear access road checkpoint and inward towards the stations is considered the **OCA**.

EAL Bases Reference(s):

1. NEI 99-01, Rev. 05, HA2 Example EAL #1
2. UFSAR 3.2 Classification of Structures, Components and Systems

EAL Category: ~~C~~ H – Hazards & Other Conditions Affecting Plant Safety

EAL Subcategory: 3 – Hazardous Gas

Initiating Condition: Release of toxic, corrosive, asphyxiant or flammable gases deemed detrimental to **NORMAL PLANT OPERATIONS**

Mode Applicability: All

EAL# & Classification Level: **HU3.1 – UNUSUAL EVENT**

EAL:

Release of toxic, corrosive, asphyxiant or flammable gas in amounts (excluding small or incidental releases) that have or could adversely affect **NORMAL PLANT OPERATIONS**

Basis:

This EAL is based on the release of toxic, corrosive, asphyxiant or flammable gases of sufficient quantity to affect normal plant operations.

The fact that SCBA or other respiratory protection may be worn does not eliminate the need to declare the event.

This ~~IC~~ EAL is not intended to require significant assessment or quantification. It assumes an uncontrolled process that has the potential to affect **NORMAL PLANT OPERATIONS**. This would preclude small or incidental releases, or releases that do not impact structures needed for plant operation.

An asphyxiant is a gas capable of reducing the level of oxygen in the body to dangerous levels. Most commonly, asphyxiants work by merely displacing air in an enclosed environment. This reduces the concentration of oxygen below the normal level of around 19%, which can lead to breathing difficulties, unconsciousness or even death.

Escalation of this emergency classification level, if appropriate, would be based on EAL HA3.1.

Explanation/Discussion/Definitions:

The release may have originated within the Site Boundary, or it may have originated offsite and subsequently drifted onto the Site Boundary. Offsite events (e.g., tanker truck accident releasing toxic gases, etc.) resulting in the plant being within the evacuation area should also be considered in this EAL because of the adverse affect on **NORMAL PLANT OPERATIONS**.

Should the release affect plant **VITAL AREAS**, escalation to an ALERT would be based on EAL HA3.1. Should an **EXPLOSION** or **FIRE** occur due to flammable gas within an affected plant area, an ALERT may be appropriate based on EAL HA2.1 or EAL HA2.2.

A Toxic Gas is considered to be any substance that is dangerous to life or limb by reason of inhalation or skin contact.

A Flammable Gas is considered to be any substance that can result in an ignition, sustained burn or detonation.

Carbon dioxide (CO_2) is an asphyxiant gas. A 20 lb CO_2 extinguisher discharge will not create a hazardous atmosphere unless the room volume is less than 2500 cubic feet.

A Corrosive Gas is a highly reactive substance that causes obvious damage to living tissue. Corrosives act either directly, by chemically destroying the part or indirectly by causing inflammation. Acids and bases are common corrosive materials. Corrosives such as these are also sometimes referred to as caustics.

This EAL should not be construed to include confined spaces that must be ventilated prior to entry or situations involving the fire department personnel who are using respiratory equipment during the performance of their duties unless it also affects personnel not involved with the fire department activates. In addition, those situations that require personnel to wear respiratory protection equipment as the result of airborne contamination as required by Radiation Protection personnel do not meet the intent of this EAL.

Definitions:

NORMAL PLANT OPERATIONS: Activities at the plant site associated with routine testing, maintenance, or equipment operations, in accordance with normal operating or administrative procedures. Entry into abnormal or emergency operating procedures, or deviation from normal security or radiological controls posture, is a departure from **NORMAL PLANT OPERATIONS**.

VITAL AREA: Typically any site specific areas, normally within the **PROTECTED AREA**, that contains equipment, systems, components, or material, the failure, destruction, or release of which could directly or indirectly endanger the public health and safety by exposure to radiation.

PROTECTED AREA (PA): A security controlled area within the **OWNER CONTROLLED AREA (OCA)** that is enclosed by the security perimeter fence and monitored by intrusion detection systems. Access to the **PA** requires proper security clearance and is controlled at the Security Center.

OWNER CONTROLLED AREA (OCA): Property owned, maintained and controlled by PSEG Nuclear as part of the Salem & Hope Creek Generating Station complex. For the purpose of emergency classification, area from the PSEG Nuclear access road checkpoint and inward towards the stations is considered the **OCA**.

FIRE: Combustion characterized by heat and light. Sources of smoke such as slipping drive belts or overheated electrical equipment do not constitute **FIRES**. Observation of flame is preferred but is NOT required if large quantities of smoke and heat are observed.

EXPLOSION: A rapid, violent, unconfined combustion, or catastrophic failure of pressurized/energized equipment that imparts energy of sufficient force to potentially damage permanent structures, systems, or components.

EAL Bases Reference(s):

1. NEI 99-01, Rev. 05, HU3 Example EAL #1
2. OE25324 Alert Declared Due to CO2 Fire Extinguisher Discharge

This page intentionally blank

EAL Category: ~~C~~ H – Hazards & Other Conditions Affecting Plant Safety

EAL Subcategory: 3 – Hazardous Gas

Initiating Condition: Release of toxic, corrosive, asphyxiant or flammable gases deemed detrimental to **NORMAL PLANT OPERATIONS**

Mode Applicability: All

EAL# & Classification Level: **HU3.2 – UNUSUAL EVENT (Common Site)**

EAL:

Notification by Local, County, or State Officials for evacuation or sheltering of site personnel based on an **off-site gas release event** that includes toxic, corrosive, asphyxiant, or flammable gas

Basis:

~~This EAL is based on the release of toxic, corrosive, asphyxiant or flammable gases of sufficient quantity to affect normal plant operations.~~

The fact that SCBA or other respiratory protection may be worn does not eliminate the need to declare the event.

~~This IC is not intended to require significant assessment or quantification. It assumes an uncontrolled process that has the potential to affect plant operations. This would preclude small or incidental releases, or releases that do not impact structures needed for plant operation.~~

An asphyxiant is a gas capable of reducing the level of oxygen in the body to dangerous levels. Most commonly, asphyxiants work by merely displacing air in an enclosed environment. This reduces the concentration of oxygen below the normal level of around 19%, which can lead to breathing difficulties, unconsciousness or even death.

Escalation of this emergency classification level, if appropriate, would be based on EAL HA3.1.

Explanation/Discussion/Definitions:

This EAL is based on the existence of an uncontrolled release originating offsite and local, county or state officials have reported the need for evacuation or sheltering of site personnel.

State and local officials may determine the evacuation area for an offsite spill or release by using "The Emergency Response Guidebook (ERG2008)" developed by the US Department of Transportation.

Should the release affect plant **VITAL AREAS**, escalation to an ALERT would be based on EAL HA3.1. Should an **EXPLOSION** or **FIRE** occur due to flammable gas within an affected plant area, an ALERT may be appropriate based on EAL HA2.1.

A Toxic Gas is considered to be any substance that is dangerous to life or limb by reason of inhalation or skin contact.

A Flammable Gas is considered to be any substance that can result in an ignition, sustained burn or detonation.

Carbon dioxide (CO_2) is an asphyxiant gas. A 20 lb. CO_2 fire extinguisher discharge will not create a hazardous atmosphere unless the room volume is less than 2500 cu.ft.

A Corrosive Gas is a highly reactive substance that causes obvious damage to living tissue. Corrosives act either directly, by chemically destroying the part or indirectly by causing inflammation. Acids and bases are common corrosive materials. Corrosives such as these are also sometimes referred to as caustics.

Definitions:

NORMAL PLANT OPERATIONS: Activities at the plant site associated with routine testing, maintenance, or equipment operations, in accordance with normal operating or administrative procedures. Entry into abnormal or emergency operating procedures, or deviation from normal security or radiological controls posture, is a departure from **NORMAL PLANT OPERATIONS**.

VITAL AREA: Typically any site specific areas, normally within the **PROTECTED AREA**, that contains equipment, systems, components, or material, the failure, destruction, or release of which could directly or indirectly endanger the public health and safety by exposure to radiation.

PROTECTED AREA (PA): A security controlled area within the **OWNER CONTROLLED AREA (OCA)** that is enclosed by the security perimeter fence and monitored by intrusion detection systems. Access to the **PA** requires proper security clearance and is controlled at the Security Center.

OWNER CONTROLLED AREA (OCA): Property owned, maintained and controlled by PSEG Nuclear as part of the Salem & Hope Creek Generating Station complex. For the purpose of emergency classification, area from the PSEG Nuclear access road checkpoint and inward towards the stations is considered the **OCA**.

FIRE: Combustion characterized by heat and light. Sources of smoke such as slipping drive belts or overheated electrical equipment do not constitute **FIRES**. Observation of

flame is preferred but is NOT required if large quantities of smoke and heat are observed.

EXPLOSION: A rapid, violent, unconfined combustion, or catastrophic failure of pressurized/energized equipment that imparts energy of sufficient force to potentially damage permanent structures, systems, or components.

EAL Bases Reference(s):

1. NEI 99-01, Rev. 05, HU3 Example EAL #2
2. The Emergency Response Guide (ERG2008)
3. OE25354 Alert Due to CO_2 Fire Extinguisher Discharge

This page intentionally blank

EAL Category: ~~C~~ H – Hazards & Other Conditions Affecting Plant Safety

EAL Subcategory: 3 – Hazardous Gas

Initiating Condition: Access to a **VITAL AREA** is prohibited due to toxic, corrosive, asphyxiant or flammable gases which jeopardize operation of operable equipment required to maintain safe operations or safely shut down the reactor

Mode Applicability: All

EAL# & Classification Level: **HA3.1 – ALERT**

EAL:

Access to **ANY Table H-1** plant structure is prohibited due to toxic, corrosive, asphyxiant, or flammable gases which jeopardize operation of systems required to maintain safe operations or safely shut down the reactor (Note 5)

Note 5: If the equipment in the stated area was already inoperable, or out of service, before the event occurred, then this EAL should NOT be declared as it will have NO adverse impact on the ability of the plant to safely operate or safely shut down beyond that already allowed by Technical Specifications at the time of the event.

Table H-1 Plant Structures Containing Safe Shutdown Systems or Components
• Auxiliary Building • Service Water Intake Structure • Control Point Area • Inner/Outer Penetration Areas • Containment • Fuel Handling Building • Service Building • RWST, PWST, and AFWST Area

Basis:

Gases in a **VITAL AREA** can affect the ability to safely operate or safely shut down the reactor.

The fact that SCBA or other respiratory protection may be worn does not eliminate the need to declare the event.

Declaration should not be delayed for confirmation from atmospheric testing if the atmosphere poses an immediate threat to life and health or an immediate threat of severe exposure to gases. This could be based upon documented analysis, indication of personal ill effects from exposure, or operating experience with the hazards.

~~If the equipment in the stated area was already inoperable, or out of service, before the event occurred, then this EAL should not be declared as it will have no adverse impact on the ability of the plant to safely operate or safely shutdown beyond that already allowed by Technical Specifications at the time of the event.~~

An asphyxiant is a gas capable of reducing the level of oxygen in the body to dangerous levels. Most commonly, asphyxiants work by merely displacing air in an enclosed environment. This reduces the concentration of oxygen below the normal level of around 19%, which can lead to breathing difficulties, unconsciousness or even death.

An uncontrolled release of flammable gasses within a facility structure has the potential to affect safe operation of the plant by limiting either operator or equipment operations due to the potential for ignition and resulting equipment damage/personnel injury. Flammable gasses, such as hydrogen and acetylene, are routinely used to maintain plant systems (hydrogen) or to repair equipment/components (acetylene - used in welding). This EAL assumes concentrations of flammable gasses which can ignite/support combustion.

Escalation of this emergency classification level, if appropriate, will be based on EALs in Category S, System Malfunctions, Category F, Fission Product Barrier Degradation, or Category R, Abnormal Rad Levels / Rad~~ioactive~~ Effluent ~~ICs~~.

Explanation/Discussion/Definitions:

This EAL is based on gases that have entered a plant structure in concentrations that could be unsafe for plant personnel and, therefore, preclude access to equipment necessary for the safe operation or safe shutdown of the plant. The Table H-1 Plant Structures Containing Safe Shutdown Systems or Components include those plant structures identified as Seismic Category I.

A Toxic Gas is considered to be any substance that is dangerous to life or limb by reason of inhalation or skin contact.

A Flammable Gas is considered to be any substance that can result in an ignition, sustained burn or detonation.

Carbon dioxide (CO_2) is an asphyxiant gas. A 20 lb CO_2 extinguisher discharge will not create a hazardous atmosphere unless the room volume is less than 2500 cubic feet.

A Corrosive Gas is a highly reactive substance that causes obvious damage to living tissue. Corrosives act either directly, by chemically destroying the part or indirectly by causing inflammation. Acids and bases are common corrosive materials. Corrosives such as these are also sometimes referred to as caustics.

This EAL should not be construed to include confined spaces that must be ventilated prior to entry or situations involving the fire department personnel who are using respiratory equipment during the performance of their duties unless it also affects personnel not involved with the fire department activates. In addition, those situations that require personnel to wear respiratory protection equipment as the result of airborne contamination as required by Radiation Protection personnel do not meet the intent of this EAL.

Definitions:

VITAL AREA: Typically any site specific areas, normally within the **PROTECTED AREA**, that contains equipment, systems, components, or material, the failure, destruction, or release of which could directly or indirectly endanger the public health and safety by exposure to radiation.

PROTECTED AREA (PA): A security controlled area within the **OWNER CONTROLLED AREA (OCA)** that is enclosed by the security perimeter fence and monitored by intrusion detection systems. Access to the **PA** requires proper security clearance and is controlled at the Security Center.

OWNER CONTROLLED AREA (OCA): Property owned, maintained and controlled by PSEG Nuclear as part of the Salem & Hope Creek Generating Station complex. For the purpose of emergency classification, area from the PSEG Nuclear access road checkpoint and inward towards the stations is considered the **OCA**.

EAL Bases Reference(s):

1. NEI 99-01, Rev. 05, HA3 Example EAL #1
2. UFSAR 3.2 Classification of Structures, Components and Systems
3. OE25324 Alert Declared Due to CO2 Fire Extinguisher Discharge

This page intentionally blank

EAL Category: H – Hazards & Other Conditions Affecting Plant Safety

EAL Subcategory: 4 – Security

Initiating Condition: Confirmed **SECURITY CONDITION** or threat which indicates a potential degradation in the level of safety of the plant

Mode Applicability: All

EAL# & Classification Level: **HU4.1 – UNUSUAL EVENT (Common Site)**

EAL:

A **SECURITY CONDITION** that does NOT involve a **HOSTILE ACTION** as reported by the Security Operations Supervisor or designee (Note 8)

OR

Receipt of a **CREDIBLE/ACTUAL THREAT** to Salem or Hope Creek station – (determined by security in accordance with SY-AA-101-132, "Threat Assessment") (Note 8)

OR

A **VALIDATED** notification from NRC providing information of a Salem/Hope Creek **AIRCRAFT** threat (Note 8)

NOTE 8: Shift Manager (SM) should implement the Prompt Actions of NC.EP-EP.ZZ-0102, EC Response, Attachment 10, prior to classification of a security emergency.

Key Information to obtain from Security Supervision upon SM notification of a security event:

- Determination if the security event is a **HOSTILE ACTION** or **SECURITY CONDITION**
- If a **HOSTILE ACTION**, is location the **OCA** or **PA**?

Basis:

Security events which do not represent a potential degradation in the level of safety of the plant are reported under 10 CFR 73.71 or in some cases under 10 CFR 50.72. Security events assessed as **HOSTILE ACTIONS** are classifiable under EAL HA4.1, EAL HS4.1 and EAL HG4.1.

A higher initial classification could be made based upon the nature and timing of the security threat and potential consequences. The ~~licensee~~ Emergency Coordinator shall consider upgrading the emergency response status and emergency classification level in accordance with the Salem – Hope Creek Security Contingency Plan~~site's Safeguards Contingency Plan and Emergency Plan~~.

~~EAL #1~~1st Condition (**SECURITY CONDITION**)

Reference is made to ~~site~~ the specific security shift supervision (Security Operations Supervisor or designee) because these individuals are the designated personnel on-site qualified and trained to confirm that a security event is occurring or has occurred. Training on security event classification confirmation is closely controlled due to the strict secrecy controls placed on the Salem – Hope Creek Security Contingency Plan~~plant Safeguards Contingency Plan~~.

This threshold is based on ~~site specific security plans~~the Salem – Hope Creek Security Contingency Plan. ~~Site specific Safeguards Contingency Plans are~~The Salem – Hope Creek Security Contingency Plan is based on guidance provided by NEI 03-12, Template for the Security Plan, Training and Qualification Plan, Security Contingency Plan and ISFSI Program.

~~EAL #2~~2nd Condition (**CREDIBLE / ACTUAL THREAT**)

This threshold is included to ensure that appropriate notifications for the security threat are made in a timely manner. This includes information of a credible threat. Only the site to which the specific threat is made needs declare the Notification of an UNUSUAL EVENT.

The determination of **CREDIBLE** is made through use of information found in Threat Assessment, SY-AA-101-132~~the site specific Safeguards Contingency Plan~~.

~~EAL #3~~3rd Condition (**AIRCRAFT** Threat)

The intent of this part of the EAL is to ensure that notifications for the **AIRCRAFT** threat are made in a timely manner and that offsite response organization (OROs) and plant personnel are at a state of heightened awareness regarding the credible threat. It is not the intent of this EAL to replace existing non-hostile related EALs involving **AIRCRAFT**.

This EAL is met when a plant (site) receives information regarding an **AIRCRAFT** threat from NRC. Validation is performed by calling the NRC or by other approved methods of authentication. Only the site to which the specific threat is made need declare the UNUSUAL EVENT.

The NRC Headquarters Operations Officer (HOO) will communicate to the licensee if the threat involves an **AIRLINER** (**AIRLINER** is meant to be a large **AIRCRAFT** with the potential for causing significant damage to the plant). The status and size of the plane may be provided by NORAD through the NRC.

Escalation to ALERT emergency classification level would be via EAL HA4.1 and would be appropriate if the threat involves an **AIRLINER** within 30 minutes of the plant or a **HOSTILE ACTION** in the **OCA** or **PA**.

Explanation/Discussion/Definitions:

If the security events do not meet the threshold for an UNUSUAL EVENT classification, they may result in the need to make a non-emergency report per RAL Section 11.7.1.a, One Hour Non-Emergency Safeguards Event (10 CFR 73.71) as determined by Security per SY-AA-1002, "Safeguards Event Report."

Security will be focused on actions to mitigate the security event and will provide the SM with key information as the event progresses. Communications between the SMs and the Security Team Leader should be accurate, concise, and focused on EAL criteria and protection of key target sets. As Security and Operations terminology sometimes differ, clarifying questions should be asked to ensure accurate information exchange.

1st Condition (**SECURITY CONDITION**)

Page 6 of this EAL Basis is a "Security Contingency Event Summary Table" that indicates which Security Contingency Events could result in Security Supervision determining that a **SECURITY CONDITION** exists and therefore an UNUSUAL EVENT classification should be made **OR**, could result in Security Supervision determining that a **HOSTILE ACTION** is or has occurred and therefore classification at the ALERT or higher level should be made based on the location (**OCA** or **PA**) of the **HOSTILE ACTION**.

2nd Condition (**CREDIBLE / ACTUAL THREAT**)

This threshold is included to ensure that threat information from any source which is assessed by security supervision as being a "**CREDIBLE/ACTUAL THREAT**" is classified as an UNUSUAL EVENT. Only the site to which the specific threat is made needs to declare the UNUSUAL EVENT. For Security Events, Salem and Hope Creek is considered a single site, therefore a "**CREDIBLE/ACTUAL THREAT**" to either Salem or Hope Creek would affect the entire site and a "Common Site" UE declaration would be made.

Timely classification will ensure that Offsite Response Organizations and plant personnel are notified in a timely manner resulting in a state of heightened awareness. Threats are evaluated by security per Threat Assessment, SY-AA-101-132. Security threats that do not meet the definition of a "**CREDIBLE/ACTUAL THREAT**" should be dispositioned IAW Threat Assessment, SY-AA-101-132.

3rd Condition (**AIRCRAFT** Threat)

AIRCRAFT threat calls from the NRC should be **VALIDATED** by use of NRC authentication code or a return call to the NRC Headquarter Operations Center.

For security events, Salem and Hope Creek is considered a single site, therefore, a "**VALIDATED AIRCRAFT THREAT**" to either Salem or Hope Creek would affect the entire site and a "Common Site" UE declaration would be made.

Definitions:

SECURITY CONDITION: Any security event as listed in the approved security contingency plan that constitutes a threat/compromise to site security, threat/risk to site personnel, or a potential degradation to the level of safety of the plant. A **SECURITY CONDITION** does not involve a **HOSTILE ACTION**.

VALIDATED: **AIRCRAFT** threat call from the NRC that is confirmed to be authentic. Calls from the NRC are **VALIDATED** by use of the NRC provided authentication code or by making a return call to the NRC Headquarter Operations Center and confirming threat information with the NRC Operation Officer. **AIRCRAFT** threat calls from other agencies, NORAD, FAA, or FBI should be **VALIDATED** by calling the NRC Operations Officer.

AIRCRAFT: Includes both small and large **AIRCRAFT.** Examples of **AIRCRAFT** include general aviation Cessna, Piper and Lear type private planes, large passenger or freight planes as well as police, medical and media helicopters. A large **AIRCRAFT** is referred to as an **AIRLINER.**

AIRLINER/LARGE AIRCRAFT: Any size or type of **AIRCRAFT** with the potential for causing significant damage to the plant (refer to the Security Contingency Plan for a more detailed definition).

CREDIBLE / ACTUAL THREAT: Is a threat which poses a likely and serious danger to the safe operation of the facility or to site personnel and public safety.

HOSTILE ACTION: An act toward Salem or Hope Creek or its personnel that includes the use of violent force to destroy equipment, take **HOSTAGES**, and/or intimidate the licensee to achieve an end. This includes attack by air, land, or water using guns, explosives, **PROJECTILE**s, vehicles, or other devices used to deliver destructive force. Other acts that satisfy the overall intent may be included. **HOSTILE ACTION** should not be construed to include acts of civil disobedience or felonious acts that are not part of a concerted attack on Salem or Hope Creek. Non-terrorism-based EALs should be used to address such activities (i.e., this may include violent acts between individuals in the **OCA**).

OWNER CONTROLLED AREA (OCA): Property owned, maintained and controlled by PSEG Nuclear as part of the Salem & Hope Creek Generating Station complex. For the purpose of emergency classification, the area from the PSEG Nuclear access road checkpoint and inward towards the stations is considered the **OCA.**

PROTECTED AREA (PA): A security controlled area within the **OWNER-CONTROLLED AREA (OCA)** that is enclosed by the security perimeter fence and monitored by intrusion detection systems. Access to the **PA** requires proper security clearance and is controlled at the Security center.

PROJECTILE: An object that impacts Salem/Hope Creek that could cause concern for continued operability, reliability, or personnel safety.

HOSTAGE: A person(s) held as leverage against the station to ensure that demands will be met by the station.

EAL Bases Reference(s):

1. NEI 99-01, Rev. 05, HU4 Example EAL #1, #2, #3
2. Salem – Hope Creek Security Contingency Plan
3. SY-AA-101-132 Threat Assessment
4. SC.OP-AB.CR-0004(Q) – Security Event
5. SC.OP-AB.CR-0005(Q) – Airborne Threat

Security Contingency Event Summary Table

Contingency Event Number	Contingency Event Title	Event Could Result in Determination of a **SECURITY CONDITION** (UE ONLY) Yes / No	Event Could Result in Determination of a **HOSTILE ACTION** (ALERT or Higher) Yes / No
# 1	Malevolent Threat / Use of a Vehicle	Yes	Yes
# 2	Detection of Impending Attack / Threat Directed Armed Attack	Yes	Yes
# 3	Civil Disturbance	Yes	No
# 4	PA/VA Intrusion or Detection of a Breached Barrier	No	Yes
# 5	Fire / Explosion or other Catastrophic Event	Yes	Yes
# 6	Detection of Aberrant Behavior	No	No
# 7	Security Force Strike / Unavailability of Security Force	No	No
# 8	Loss of Contact with Security Officer	Yes	Yes
# 9	Confirmed Sabotage / Tampering / Vandalism / Malicious Mischief	Yes	Yes
# 10	Bomb Threat / Explosive Device Discovered	Yes	Yes
# 11	Loss of Onsite / Offsite Security Communications	Yes	No
# 12	Loss of Security System Power	Yes	No
# 13	Loss of Alarm Assessment Capability	Yes	No
# 14	Loss of Security Lighting	Yes	No
# 15	Loss of Security Computer	Yes	No
# 16	Extortion / Coercion / Hostage Threat	Yes	Yes
# 17	Waterborne Threat	Yes	Yes
# 18	Coordinated Land Vehicle Bomb Attack	No	Yes
# 19	Standoff Attack by a Sniper	Yes	Yes
# 20	Insider Threat	Yes	No

EAL Category: H – Hazards & Other Conditions Affecting Plant Safety

EAL Subcategory: 4 – Security

Initiating Condition: **HOSTILE ACTION** within the **OWNER CONTROLLED AREA** or airborne attack threat

Mode Applicability: All

EAL# & Classification Level: **HA4.1 – ALERT**

EAL:

A **HOSTILE ACTION** is occurring or has occurred within the **OCA** as reported by the Security Operations Supervisor or designee (Note 8)

OR

A **VALIDATED** notification from NRC of a **AIRLINER** attack threat **< 30 minutes** away from Salem/Hope Creek (Note 8)

NOTE 8: Shift Manager (SM) should implement the Prompt Actions of NC.EP-EP.ZZ-0102, EC Response, Attachment 10, prior to classification of a security emergency.

Key Information to obtain from Security Supervision upon SM notification of a security event:

- Determination if the security event is a **HOSTILE ACTION** or **SECURITY CONDITION**
- If a **HOSTILE ACTION**, is location the **OCA** or **PA**?

Basis:

~~These~~ This EAL~~s~~ addresses the contingency for a very rapid progression of events, such as that experienced on September 11, 2001. They are not premised solely on the potential for a radiological release. Rather the issue includes the need for rapid assistance due to the possibility for significant and indeterminate damage from additional air, land or water attack elements.

The fact that the site is under serious attack or is an identified attack target with minimal time available for further preparation or additional assistance to arrive requires a heightened state of readiness and implementation of protective measures that can be effective (such as on-site evacuation, dispersal or sheltering).

~~EAL #1~~1st Condition (**OCA HOSTILE ACTION**)

This EAL addresses the potential for a very rapid progression of events due to a **HOSTILE ACTION** within or directed towards the **OWNER CONTROLLED AREA (OCA)**. It is not intended to address incidents that are accidental events or acts of civil disobedience, such as small **AIRCRAFT** impact, hunters, or physical disputes between employees within the ~~**OWNER CONTROLLED AREA**~~**OCA**~~OCA~~. Those events are adequately addressed by other EALs or RALs

Note that this EAL is applicable for any **HOSTILE ACTION** occurring, or that has occurred, in the **OWNER CONTROLLED AREA**. ~~This includes the ISFSI, located within Salem/Hope Creek PROTECTED AREA.~~

If not previously notified by the NRC that the airborne **HOSTILE ACTION** was intentional, then it would be expected, although not certain, that notification by an appropriate Federal agency would follow. In this case, appropriate federal agency is intended to be NORAD, FBI, FAA or NRC. However, the declaration should not be unduly delayed awaiting Federal notification.

~~EAL #2~~2nd Condition (**AIRLINER** Threat)

This EAL addresses the immediacy of an expected threat (**AIRLINER**) arrival or impact on the site within a relatively short time (< 30 minutes).

The intent of this EAL is to ensure that notifications for the **AIRLINER** attack threat are made in a timely manner and that OROs and plant personnel are at a state of heightened awareness regarding the credible threat. **AIRLINER** is meant to be a large **AIRCRAFT** with the potential for causing significant damage to the ~~plant~~site.

This EAL is met when a plant receives information regarding an **AIRLINER** attack threat from NRC and the **AIRLINER** is within 30 minutes of the plant. Only the site to which the specific threat is made need declare the ALERT.

The NRC Headquarters Operations Officer (HOO) will communicate to the licensee if the threat involves an **AIRLINER** (**AIRLINER** is meant to be a large **AIRCRAFT** with the potential for causing significant damage to the plant). The status and size of the plane may be provided by NORAD through the NRC.

Explanation/Discussion/Definitions:

This event will be escalated to a SITE AREA EMERGENCY based upon **HOSTILE ACTION** affecting the **PROTECTED AREA (PA)**. Also, if Hope Creek declares an SAE due to their **PA** being affected by the security event, Salem will escalate to SAE to match them.

1st Condition (**OCA HOSTILE ACTION**)

Reference is made to the specific security shift supervision (Security Operations Supervisor or designee) because these individuals are the designated personnel on-site qualified and trained to confirm that a **HOSTILE ACTION** is occurring or has occurred.

This EAL condition is not premised solely on adverse health effects caused by a radiological release. Rather the issue is the immediate need for assistance due to the nature of the event and the potential for significant and indeterminate damage. Although nuclear plant security officers are well trained and prepared to protect against **HOSTILE ACTION**, it is appropriate for Offsite Response Organizations (OROs) to be notified and encouraged to begin activation to be better prepared should it be necessary to consider further actions.

Page 6 of this EAL Basis is a "Security Contingency Event Summary Table" that indicates which Security Contingency Events could result in Security Supervision determining that a **HOSTILE ACTION** is or has occurred and therefore classification at the ALERT or higher level should be made based on the location (**OCA** or **PA**) of the **HOSTILE ACTION**. Security events that do not involve a **HOSTILE ACTION** may result in Security Supervision determining that a **SECURITY CONDITION** exists and therefore an UNUSUAL EVENT classification should be made per EAL HU4.1.

2nd Condition (**AIRLINER** Threat)

The fact that the site is an identified attack candidate with minimal time available for further preparation requires a heightened state of readiness and implementation of protective measures that can be effective (onsite evacuation, dispersal, or sheltering) before arrival or impact.

This EAL is met when a plant receives **VALIDATED** information regarding an **AIRLINER** attack threat from NRC and the **AIRLINER** is less than 30 minutes away from the site. Only the site (Salem and Hope Creek is considered a single site for Security event classifications) to which the specific threat is made needs declare the ALERT.

AIRLINER threat calls from the NRC should be **VALIDATED** by use of NRC authentication code or a return call to the NRC Headquarter Operations Center.

Definitions:

HOSTILE ACTION: An act toward Salem or Hope Creek or its personnel that includes the use of violent force to destroy equipment, take **HOSTAGES**, and/or intimidate the licensee to achieve an end. This includes attack by air, land, or water using guns, explosives, **PROJECTILES**, vehicles, or other devices used to deliver destructive force. Other acts that satisfy the overall intent may be included. **HOSTILE ACTION** should not be construed to include acts of civil disobedience or felonious acts that are not part of a concerted attack on Salem or Hope Creek. Non-terrorism-based EALs should be used to address such activities (i.e., this may include violent acts between individuals in the **OWNER CONTROLLED AREA**).

OWNER CONTROLLED AREA (OCA): Property owned, maintained and controlled by PSEG Nuclear as part of the Salem & Hope Creek Generating Station complex. For the purpose of emergency classification, area from the PSEG Nuclear access road checkpoint and inward towards the stations is considered the **OCA**.

HOSTAGE: A person(s) held as leverage against the station to ensure that demands will be met by the station.

PROTECTED AREA (PA): A security controlled area within the **OWNER-CONTROLLED AREA (OCA)** that is enclosed by the security perimeter fence and monitored by intrusion detection systems. Access to the **PA** requires proper security clearance and is controlled at the Security Center.

AIRCRAFT: Includes both small and large **AIRCRAFT.** Examples of **AIRCRAFT** include general aviation Cessna, Piper and Lear type private planes, large passenger or freight planes as well as police, medical and media helicopters. A large **AIRCRAFT** is referred to as an **AIRLINER.**

AIRLINER/LARGE AIRCRAFT: Any size or type of **AIRCRAFT** with the potential for causing significant damage to the plant (refer to the Security Contingency Plan for a more detailed definition).

SECURITY CONDITION: Any security event as listed in the approved security contingency plan that constitutes a threat/compromise to site security, threat/risk to site personnel, or a potential degradation to the level of safety of the plant. A **SECURITY CONDITION** does not involve a **HOSTILE ACTION**.

PROJECTILE: An object directed toward Salem/Hope Creek that could cause concern for its continued operability, reliability, or personnel safety.

VALIDATED: **AIRCRAFT** threat call from the NRC that is confirmed to be authentic. Calls from the NRC are **VALIDATED** by use of the NRC provided authentication code or by making a return call to the NRC Headquarter Operations Center and confirming threat information with the NRC Operation Officer. **AIRCRAFT** threat calls from other agencies, NORAD, FAA, or FBI should be **VALIDATED** by calling the NRC Operations Officer.

EAL Bases Reference(s):

1. NEI 99-01, Rev. 05, HA4 Example EAL #1, #2
2. Salem – Hope Creek Security Contingency Plan
3. SC.OP-AB.CR-0004(Q) – Security Event
4. SC.OP-AB.CR-0005(Q) – Airborne Threat

Security Contingency Event Summary Table

Contingency Event Number	Contingency Event Title	Event Could Result in Determination of a **SECURITY CONDITION** (UE ONLY) Yes / No	Event Could Result in Determination of a **HOSTILE ACTION** (ALERT or Higher) Yes / No
# 1	Malevolent Threat / Use of a Vehicle	Yes	Yes
# 2	Detection of Impending Attack / Threat Directed Armed Attack	Yes	Yes
# 3	Civil Disturbance	Yes	No
# 4	PA/VA Intrusion or Detection of a Breached Barrier	No	Yes
# 5	Fire / Explosion or other Catastrophic Event	Yes	Yes
# 6	Detection of Aberrant Behavior	No	No
# 7	Security Force Strike / Unavailability of Security Force	No	No
# 8	Loss of Contact with Security Officer	Yes	Yes
# 9	Confirmed Sabotage / Tampering / Vandalism / Malicious Mischief	Yes	Yes
# 10	Bomb Threat / Explosive Device Discovered	Yes	Yes
# 11	Loss of Onsite / Offsite Security Communications	Yes	No
# 12	Loss of Security System Power	Yes	No
# 13	Loss of Alarm Assessment Capability	Yes	No
# 14	Loss of Security Lighting	Yes	No
# 15	Loss of Security Computer	Yes	No
# 16	Extortion / Coercion / Hostage Threat	Yes	Yes
# 17	Waterborne Threat	Yes	Yes
# 18	Coordinated Land Vehicle Bomb Attack	No	Yes
# 19	Standoff Attack by a Sniper	Yes	Yes
# 20	Insider Threat	Yes	No

EAL Category: H – Hazards & Other Conditions Affecting Plant Safety

EAL Subcategory: 4 – Security

Initiating Condition: **HOSTILE ACTION** within the **PROTECTED AREA**

Mode Applicability: All

EAL# & Classification Level: **HS4.1 – SITE AREA EMERGENCY**

EAL:

A **HOSTILE ACTION** is occurring or has occurred within the **PROTECTED AREA** as reported by the Security Operations Supervisor or designee (Note 8)

NOTE 8: Shift Manager (SM) should implement the Prompt Actions of NC.EP-EP.ZZ-0102, EC Response, Attachment 10, prior to classification of a security emergency.

Key Information to obtain from Security Supervision upon SM notification of a security event:

- Determination if the security event is a **HOSTILE ACTION** or **SECURITY CONDITION**
- If a **HOSTILE ACTION**, is location the **OCA** or **PA**?

Basis:

This condition represents an escalated threat to plant safety above that contained in the ALERT in that a **HOSTILE FORCE** has progressed from the **OWNER CONTROLLED AREA** to the **PROTECTED AREA**.

This EAL addresses the contingency for a very rapid progression of events due to a **HOSTILE ACTION** within or directed towards the **PROTECTED AREA (PA)**. Plant **VITAL AREAS** are within the **PROTECTED AREA** and are generally controlled by card key readers. A **HOSTILE ACTION** in the **PROTECTED AREA** (which includes **VITAL AREAS**) could represent a situation that threatens the safety of plant personnel and the general public.

These EALs address the contingency for a very rapid progression of events, ~~,~~ such as that experienced on September 11, 2001. It is not premised solely on the potential for a radiological release. Rather the issue includes the need for rapid assistance due to the possibility for significant and indeterminate damage from additional air, land or water attack elements.

The fact that the site is under serious attack with minimal time available for further preparation or additional assistance to arrive requires Offsite Response Organization (ORO) readiness and preparation for the implementation of protective measures.

This EAL ~~addresses the potential for a very rapid progression of events due to a **HOSTILE ACTION**. It~~ is not intended to address incidents that are accidental events or acts of civil disobedience, such as small **AIRCRAFT** impact, hunters, or physical disputes between employees within the **PROTECTED AREA**. Those events are adequately addressed by other EALs or RALs.

~~[~~Although nuclear plant security officers are well trained and prepared to protect against **HOSTILE ACTION**, it is appropriate for OROs to be notified and encouraged to begin preparations for public protective actions ~~(if they do not normally)~~ to be better prepared should it be necessary to consider further actions.~~]~~

~~[~~If not previously notified by NRC that the airborne **HOSTILE ACTION** was intentional, then it would be expected, although not certain, that notification by an appropriate Federal agency would follow. In this case, appropriate federal agency is intended to be NORAD, FBI, FAA or NRC. However, the declaration should not be unduly delayed awaiting Federal notification.~~]~~

Escalation of this emergency classification level to a GENERAL EMERGENCY, if appropriate, would be based upon the actual loss of physical control of the facility. If necessary, Salem will declare this event.~~on actual plant status after impact or progression of attack.~~

Explanation/Discussion/Definitions:

The Security Shift Supervision is defined as the Security Operations Supervisor or designee.

These individuals are the designated on-site personnel qualified and trained to confirm that a security event is occurring or has occurred. Training on security event classification confirmation is closely controlled due to the strict secrecy controls placed on the Salem – Hope Creek Security Contingency Plan (Safeguards) information.

PROJECTILES that are directed into or that have impacted the **PA** from the **OCA** or beyond are considered under this EAL as **HOSTILE ACTIONS** within the **PA.**

Page 5 of this EAL Basis is a "Security Contingency Event Summary Table" that indicates which Security Contingency Events could result in Security Supervision determining that a **HOSTILE ACTION** is or has occurred and therefore classification at the ALERT or higher level should be made based on the location (**OCA** or **PA**) of the **HOSTILE ACTION**. Security events that do not involve a **HOSTILE ACTION** may result in Security Supervision determining that a **SECURITY CONDITION** exists and therefore an UNUSUAL EVENT classification should be made per EAL HU4.1.

Definitions:

HOSTILE ACTION: An act toward Salem or Hope Creek or its personnel that includes the use of violent force to destroy equipment, take **HOSTAGES**, and/or intimidate the licensee to achieve an end. This includes attack by air, land, or water using guns, explosives, **PROJECTILES**, vehicles, or other devices used to deliver destructive force. Other acts that satisfy the overall intent may be included. **HOSTILE ACTION** should not be construed to include acts of civil disobedience or felonious acts that are not part of a concerted attack on Salem or Hope Creek. Non-terrorism-based EALs should be used to address such activities (i.e., this may include violent acts between individuals in the **OCA**).

OWNER CONTROLLED AREA (OCA): Property owned, maintained and controlled by PSEG Nuclear as part of the Salem & Hope Creek Generating Station complex. For the purpose of emergency classification, area from the PSEG Nuclear access road checkpoint and inward towards the stations is considered the OCA.

HOSTILE FORCE: One or more individuals who are engaged in a determined assault, overtly or by stealth and deception, equipped with suitable weapons capable of killing, maiming, or causing destruction.

HOSTAGE: A person(s) held as leverage against the station to ensure that demands will be met by the station.

PROTECTED AREA (PA): A security controlled area within the **OWNER-CONTROLLED AREA (OCA)** that is enclosed by the security perimeter fence and monitored by intrusion detection systems. Access to the **PA** requires proper security clearance and is controlled at the Security Center.

SECURITY CONDITION: Any security event as listed in the approved security contingency plan that constitutes a threat/compromise to site security, threat/risk to site personnel, or a potential degradation to the level of safety of the plant. A **SECURITY CONDITION** does not involve a **HOSTILE ACTION**.

AIRCRAFT: Includes both small and large **AIRCRAFT.** Examples of **AIRCRAFT** include general aviation Cessna, Piper and Lear type private planes, large passenger or freight planes as well as police, medical and media helicopters. A large **AIRCRAFT** is referred to as an **AIRLINER.**

AIRLINER/LARGE AIRCRAFT: Any size or type of **AIRCRAFT** with the potential for causing significant damage to the plant (refer to the Security Contingency Plan for a more detailed definition).

PROJECTILE: An object that impacts Salem and/or Hope Creek that could cause concern for continued operability, reliability, or personnel safety.

VITAL AREAS: Typically any site specific areas, normally within the **PROTECTED AREA**, that contains equipment, systems, components, or material, the failure, destruction, or release of which could directly or indirectly endanger the public health and safety by exposure to radiation.

EAL Bases Reference(s):

1. NEI 99-01, Rev. 05, HA4 Example EAL #1, #2
2. Salem – Hope Creek Security Contingency Plan
3. SC.OP-AB.CR-0004(Q) – Security Event
4. SC.OP-AB.CR-0005(Q) – Airborne Threat

Security Contingency Event Summary Table

Contingency Event Number	Contingency Event Title	Event Could Result in Determination of a **SECURITY CONDITION** (UE ONLY) Yes / No	Event Could Result in Determination of a **HOSTILE ACTION** (ALERT or Higher) Yes / No
# 1	Malevolent Threat / Use of a Vehicle	Yes	Yes
# 2	Detection of Impending Attack / Threat Directed Armed Attack	Yes	Yes
# 3	Civil Disturbance	Yes	No
# 4	PA/VA Intrusion or Detection of a Breached Barrier	No	Yes
# 5	Fire / Explosion or other Catastrophic Event	Yes	Yes
# 6	Detection of Aberrant Behavior	No	No
# 7	Security Force Strike / Unavailability of Security Force	No	No
# 8	Loss of Contact with Security Officer	Yes	Yes
# 9	Confirmed Sabotage / Tampering / Vandalism / Malicious Mischief	Yes	Yes
# 10	Bomb Threat / Explosive Device Discovered	Yes	Yes
# 11	Loss of Onsite / Offsite Security Communications	Yes	No
# 12	Loss of Security System Power	Yes	No
# 13	Loss of Alarm Assessment Capability	Yes	No
# 14	Loss of Security Lighting	Yes	No
# 15	Loss of Security Computer	Yes	No
# 16	Extortion / Coercion / Hostage Threat	Yes	Yes
# 17	Waterborne Threat	Yes	Yes
# 18	Coordinated Land Vehicle Bomb Attack	No	Yes
# 19	Standoff Attack by a Sniper	Yes	Yes
# 20	Insider Threat	Yes	No

This page intentionally blank

EAL Category: H – Hazards & Other Conditions Affecting Plant Safety

EAL Subcategory: 4 – Security

Initiating Condition: **HOSTILE ACTION** resulting in loss of physical control of the facility

Mode Applicability: All

EAL# & Classification Level: **HG4.1 – GENERAL EMERGENCY**

EAL:

A **HOSTILE ACTION** has occurred such that plant personnel are unable to operate equipment required to maintain safety functions (i.e., reactivity control, RCS inventory, or secondary heat removal) at Salem or Hope Creek (Note 8)

OR

A **HOSTILE ACTION** has caused failure of Spent Fuel Cooling Systems and **IMMINENT** fuel damage is likely at Salem or Hope Creek (Note 8)

NOTE 8: Shift Manager (SM) should implement the Prompt Actions of NC.EP-EP.ZZ-0102, EC Response, Attachment 10, prior to classification of a security emergency.

Key Information to obtain from Security Supervision upon SM notification of a security event:

- Determination if the security event is a **HOSTILE ACTION** or **SECURITY CONDITION**
- If a **HOSTILE ACTION**, is location the **OCA** or **PA**?

Basis:

~~EAL #1~~1st Condition

This EAL encompasses conditions under which a **HOSTILE ACTION** has resulted in a loss of physical control of **VITAL AREAS** (containing vital equipment or controls of vital equipment) required to maintain safety functions and control of that equipment cannot be transferred to and operated from another location.

~~[~~Typically, these safety functions are reactivity control (ability to shut down the reactor and keep it shutdown), ~~reactor water leve~~RCS inventory~~)~~ (ability to cool the core), and ~~decay heat~~secondary heat removal (ability to ~~maintain a heat sink~~remove decay heat). ~~for a BWR. The equivalent functions for a PWR are reactivity control, RCS inventory, and secondary heat removal.]~~

~~[Loss of physical control of the control room or remote shutdown capability alone may not prevent the ability to maintain safety functions per se. Design of the remote shutdown capability and the location of the transfer switches should be taken into account. Primary emphasis should be placed on those components and instruments that supply protection for and information about safety functions.]~~

If control of the plant equipment necessary to maintain safety functions can be transferred to another location, then the threshold is not met.

~~EAL #2~~2nd Condition

This EAL addresses failure of spent fuel cooling systems as a result of **HOSTILE ACTION** if **IMMINENT** fuel damage is likely~~, such as when a freshly off-loaded reactor core is in the spent fuel pool~~.

~~[A freshly off-loaded reactor core is defined by site specific criteria.]~~

Explanation/Discussion/Definitions:

Definitions:

HOSTILE ACTION: An act toward Salem or Hope Creek or its personnel that includes the use of violent force to destroy equipment, take **HOSTAGES**, and/or intimidate the licensee to achieve an end. This includes attack by air, land, or water using guns, explosives, **PROJECTILES**, vehicles, or other devices used to deliver destructive force. Other acts that satisfy the overall intent may be included. **HOSTILE ACTION** should not be construed to include acts of civil disobedience or felonious acts that are not part of a concerted attack on Salem or Hope Creek. Non-terrorism-based EALs should be used to address such activities (i.e., this may include violent acts between individuals in the **OCA**).

PROJECTILE: An object that impacts Salem and/or Hope Creek that could cause concern for continued operability, reliability, or personnel safety.

VITAL AREAS: Typically any site specific areas, normally within the **PROTECTED AREA**, that contains equipment, systems, components, or material, the failure,

destruction, or release of which could directly or indirectly endanger the public health and safety by exposure to radiation.

PROTECTED AREA (PA): A security controlled area within the **OWNER-CONTROLLED AREA (OCA)** that is enclosed by the security perimeter fence and monitored by intrusion detection systems. Access to the **PA** requires proper security clearance and is controlled at the Security Center.

HOSTAGE: A person(s) held as leverage against the station to ensure that demands will be met by the station.

OWNER CONTROLLED AREA (OCA): Property owned, maintained and controlled by PSEG Nuclear as part of the Salem & Hope Creek Generating Station complex. For the purpose of emergency classification, area from the PSEG Nuclear access road checkpoint and inward towards the stations is considered the **OCA**.

IMMINENT: Mitigation actions have been ineffective, additional actions are not expected to be successful, and trended information indicates that the event or condition will occur within approximately 2 hours.

EAL Bases Reference(s):

1. NEI 99-01, Rev. 05, HG1 Example EAL #1, #2
2. SC.OP-AB.CR-0004(Q) – Security Event
3. SC.OP-AB.CR-0005(Q) – Airborne Threat

This page intentionally blank

EAL Category: ~~C~~ H – Hazards & Other Conditions Affecting Plant Safety

EAL Subcategory: 5 – Control Room Evacuation

Initiating Condition: Control Room evacuation has been initiated

Mode Applicability: All

EAL# & Classification Level: **HA5.1 – ALERT**

EAL:

Control Room evacuation has been initiated

Basis:

With the C~~c~~ontrol R~~r~~oom evacuated, additional support, monitoring and direction through the Technical Support Center and/or other emergency response facilities may be necessary.

Inability to establish plant control from outside the C~~c~~ontrol R~~r~~oom will escalate this event to a SITE AREA EMERGENCY per EAL HS5.1.

Explanation/Discussion/Definitions:

Control Room evacuation represents a serious plant situation since the degree of plant control at the Remote Shutdown Panel (RSP) is not as complete as from the Control Room. The intent of this EAL is to declare an ALERT when the determination to evacuate the Control Room has been made based on environmental/personnel safety concerns, and the physical process of evacuating the Control Room per S1(S2).OP-AB.CR-0001(Q), Control Room Evacuation, or S1(S2).OP-AB.CR-0002(Q) Control Room Evacuation Due to Fire in the Control Room, Relay Room, 460/230V Switchgear Room or 4kV Switchgear Room, has commenced.

The Shift Manager (SM) determines if the Control Room requires evacuation. Control Room inhabitability may be caused by fire, dense smoke, noxious fumes, bomb threat in or adjacent to the Control Room, or other life threatening conditions.

EAL Bases Reference(s):

1. NEI 99-01, Rev. 05, HA5 Example EAL #1
2. S1(S2).OP-AB.CR-0001(Q) Control Room Evacuation
3. S1(S2).OP-AB.CR-0002(Q) Control Room Evacuation Due to Fire in the Control Room, Relay Room, 460/230V Switchgear Room or 4kV Switchgear Room
4. SC.OP-AB.CR-0003(Q) Control Room Habitability

This page intentionally blank

EAL Category: ~~C~~ H – Hazards & Other Conditions Affecting Plant Safety

EAL Subcategory: 5 – Control Room Evacuation

Initiating Condition: Control Room evacuation has been initiated and plant control CANNOT be established

Mode Applicability: All

EAL# & Classification Level: **HS5.1 – SITE AREA EMERGENCY**

EAL:

Control Room evacuation has been initiated

AND

Control of the plant CANNOT be established within **15 minutes** (Note 3)

Note 3: The Emergency Coordinator should NOT wait until the applicable time has elapsed, but should declare the event as soon as it is determined that the condition will likely exceed the applicable time.

Basis:

The intent of this ~~IC~~ EAL is to capture those events where control of the plant cannot be reestablished in a timely manner. In this case, expeditious transfer of control of safety systems has not occurred (although fission product barrier damage may not yet be indicated).

The intent of the EAL is to establish control of important plant equipment and knowledge of important plant parameters in a timely manner. Primary emphasis should be placed on those components and instruments that supply protection for and information about safety functions. ~~Typically, t~~These safety functions are reactivity control (ability to shutdown the reactor and maintain it shutdown), ~~reactor water level~~RCS inventory control (ability to cool the core), and ~~decay~~ secondary heat removal (ability to maintain a heat sink). ~~for a BWR. The equivalent functions for a PWR are reactivity control, RCS inventory, and secondary heat removal.~~

The determination of whether or not control is established at the remote shutdown panel is based on Emergency ~~Director~~ Coordinator ~~(ED)~~ judgment. The Emergency ~~Directorr~~ Coordinator is expected to make a reasonable, informed judgment within the ~~site specific time for transfer~~allocated **15 minutes** that the licensee has control of the plant from the remote shutdown panel.

~~[The *site specific time for transfer is based on analysis or assessments as to how quickly control must be reestablished without core uncovering and/or core damage. This time should not exceed 15 minutes without additional justification.*]~~

Escalation of this emergency classification level, if appropriate, would be by EALs in Category F, Fission Product Barrier Degradation, or Category R, Abnormal Rad Levels/Rad~~iological~~ Effluent ~~EALs~~.

Explanation/Discussion/Definitions:

The Shift Manager determines if the Control Room is inoperable and requires evacuation. Control Room inhabitability may be caused by fire, dense smoke, noxious fumes, bomb threat in or adjacent to the Control Room, or other life threatening conditions.

EAL Bases Reference(s):

1. NEI 99-01, Rev. 05, HS5 Example EAL #1
2. S1(S2).OP-AB.CR-0001(Q) Control Room Evacuation
3. S1(S2).OP-AB.CR-0002(Q) Control Room Evacuation Due to Fire in the Control Room, Relay Room, 460/230V Switchgear Room or 4kV Switchgear Room
4. SC.OP-AB.CR-0003(Q) Control Room Habitability

~~This page intentionally blank~~

EAL Category: ~~C~~ H – Hazards & Other Conditions Affecting Plant Safety

EAL Subcategory: 6 – EC Judgment

Initiating Condition: Other conditions exist which in the judgment of the Emergency Coordinator warrant declaration of an UNUSUAL EVENT

Mode Applicability: All

EAL# & Classification Level: **HU6.1 – UNUSUAL EVENT**

EAL:

Other conditions exist which in the judgment of the Emergency Coordinator indicate that events are in progress or have occurred which indicate a potential degradation of the level of safety of the plant or indicate a security threat to facility protection has been initiated. NO releases of radioactive material requiring off-site response or monitoring are expected unless further degradation of safety systems occurs

Basis:

This EAL addresses unanticipated conditions not addressed explicitly elsewhere but that warrant declaration of an emergency because conditions exist which are believed by the Emergency ~~Director~~ Coordinator to fall under the UNUSUAL EVENT ~~NOUE~~ emergency classification level.

Explanation/Discussion/Definitions:

None

EAL Bases Reference(s):

1. NEI 99-01, Rev. 05, HU5 Example EAL #1

This page intentionally blank

EAL Category: ~~C~~ H – Hazards & Other Conditions Affecting Plant Safety

EAL Subcategory: 6 – EC Judgment

Initiating Condition: Other conditions exist which in the judgment of the Emergency Coordinator warrant declaration of an ALERT

Mode Applicability: All

EAL# & Classification Level: **HA6.1 – ALERT**

EAL:

Other conditions exist which in the judgment of the Emergency Coordinator indicate that events are in progress or have occurred which involve an actual or potential substantial degradation of the level of safety of the plant or a security event that involves probable life threatening risk to site personnel or damage to site equipment because of **HOSTILE ACTION**. **ANY** releases are expected to be limited to small fractions of the EPA Protective Action Guideline exposure levels

Basis:

This EAL addresses unanticipated conditions not addressed explicitly elsewhere but that warrant declaration of an emergency because conditions exist which are believed by the Emergency ~~Director~~ Coordinator to fall under the ALERT emergency classification level.

Explanation/Discussion/Definitions:

Definitions:

HOSTILE ACTION: An act toward Salem or Hope Creek or its personnel that includes the use of violent force to destroy equipment, take **HOSTAGES**, and/or intimidate the licensee to achieve an end. This includes attack by air, land, or water using guns, explosives, **PROJECTILES**, vehicles, or other devices used to deliver destructive force. Other acts that satisfy the overall intent may be included. **HOSTILE ACTION** should not be construed to include acts of civil disobedience or felonious acts that are not part of a concerted attack on Salem or Hope Creek plants.

HOSTAGE: A person(s) held as leverage against the station to ensure that demands will be met by the station.

PROJECTILE: An object that impacts Salem and/or Hope Creek that could cause concern for its continued operability, reliability, or personnel safety.

EAL Bases Reference(s):

1. NEI 99-01, Rev. 05, HA6 Example EAL #1

EAL Category: ~~C~~ H – Hazards & Other Conditions Affecting Plant Safety

EAL Subcategory: 6 – EC Judgment

Initiating Condition: Other conditions exist which in the judgment of the Emergency Coordinator warrant declaration of a SITE AREA EMERGENCY

Mode Applicability: All

EAL# & Classification Level: **HS6.1 – SITE AREA EMERGENCY**

EAL:

Other conditions exist which in the judgment of the Emergency Coordinator indicate that events are in progress or have occurred which involve actual or likely major failures of plant functions needed for protection of the public or **HOSTILE ACTION** that results in intentional damage or malicious acts; (1) toward site personnel or equipment that could lead to the likely failure of or; (2) that prevent effective access to equipment needed for the protection of the public. **ANY** releases are NOT expected to result in exposure levels which exceed EPA Protective Action Guideline exposure levels beyond the site boundary

Basis:

This EAL addresses unanticipated conditions not addressed explicitly elsewhere but that warrant declaration of an emergency because conditions exist which are believed by the Emergency ~~Director~~ Coordinator to fall under the emergency classification level description for SITE AREA EMERGENCY.

Explanation/Discussion/Definitions:

Definitions:

HOSTILE ACTION: An act toward Salem or Hope Creek or its personnel that includes the use of violent force to destroy equipment, take **HOSTAGES**, and/or intimidate the licensee to achieve an end. This includes attack by air, land, or water using guns, explosives, **PROJECTILES**, vehicles, or other devices used to deliver destructive force. Other acts that satisfy the overall intent may be included. **HOSTILE ACTION** should not be construed to include acts of civil disobedience or felonious acts that are not part of a concerted attack on Salem or Hope Creek plants.

HOSTAGE: A person(s) held as leverage against the station to ensure that demands will be met by the station.

PROJECTILE: An object that impacts Salem and/or Hope Creek that could cause concern for its continued operability, reliability, or personnel safety.

EAL Bases Reference(s):

1. NEI 99-01, Rev. 05, HS3 Example EAL #1

EAL Category: ~~C~~ H – Hazards & Other Conditions Affecting Plant Safety

EAL Subcategory: 6 – EC Judgment

Initiating Condition: Other conditions exist which in the judgment of the Emergency Coordinator warrant declaration of a GENERAL EMERGENCY

Mode Applicability: All

EAL# & Classification Level: **HG6.1 – GENERAL EMERGENCY**

EAL:

Other conditions exist which in the judgment of the Emergency Coordinator indicate that events are in progress or have occurred which involve actual or **IMMINENT** substantial core degradation or melting with potential for loss of containment integrity or **HOSTILE ACTION** that results in an actual loss of physical control of the facility. Releases can be reasonably expected to exceed EPA Protective Action Guideline exposure levels off-site for more than the immediate site area

Basis:

This EAL addresses unanticipated conditions not addressed explicitly elsewhere but that warrant declaration of an emergency because conditions exist which are believed by the Emergency ~~Director~~ Coordinator to fall under the emergency classification level description for GENERAL EMERGENCY.

Explanation/Discussion/Definitions:

Definitions:

HOSTILE ACTION: An act toward Salem or Hope Creek or its personnel that includes the use of violent force to destroy equipment, take **HOSTAGES**, and/or intimidate the licensee to achieve an end. This includes attack by air, land, or water using guns, explosives, **PROJECTILES**, vehicles, or other devices used to deliver destructive force. Other acts that satisfy the overall intent may be included. **HOSTILE ACTION** should not be construed to include acts of civil disobedience or felonious acts that are not part of a concerted attack on Salem or Hope Creek plants.

HOSTAGE: A person(s) held as leverage against the station to ensure that demands will be met by the station.

PROJECTILE: An object that impacts Salem and/or Hope Creek that could cause concern for its continued operability, reliability, or personnel safety.

IMMINENT: Mitigation actions have been ineffective, additional actions are not expected to be successful, and trended information indicates that the event or condition will occur within approximately 2 hours (unless a different time is specified).

EAL Bases Reference(s):

1. NEI 99-01, Rev. 05, HG2 Example EAL #1

EALs for:

Systems Malfunctions

EAL Category: S – System Malfunction

EAL Subcategory: 1 – Loss of AC Power

Initiating Condition: Loss of all offsite AC power to vital buses for 15 minutes or longer

Mode Applicability: 1 - Power Operations, 2 - Startup, 3 - Hot Standby, 4 - Hot Shutdown

EAL# & Classification Level: **SU1.1 – UNUSUAL EVENT**

EAL:

Loss of **all** Offsite AC power to **all** 4KV Vital Buses

AND

≥ 15 minutes have elapsed (Note 3)

Note 3: The Emergency Coordinator should NOT wait until the applicable time has elapsed, but should declare the event as soon as it is determined that the condition will likely exceed the applicable time.

Basis:

Prolonged loss of off-site AC power reduces required redundancy and potentially degrades the level of safety of the plant by rendering the plant more vulnerable to a complete loss of AC power to ~~emergency~~ vital busses.

Fifteen minutes was selected as a threshold to exclude transient or momentary losses of off-site power.

Explanation/Discussion/Definitions:

The AC power distribution is summarized in Attachment 2, page 2.

Emergency Classification escalates to an ALERT under EAL SA1.1 based on AC power to 4KV vital buses being reduced to a single source.

EAL Bases Reference(s):

1. NEI 99-01, Rev. 05 – SU1 Example EAL #1
2. UFSAR Figure 8.2-2 500 kV Switchyard Diagram
3. UFSAR Figure 8.3-1 Auxiliary Power System Diagram

4. UFSAR 8.1.1 Utility Grid System and Interconnections
5. UFSAR 8.3.1 Power
6. SGS Technical Specifications 3.8.1 A.C. Sources
7. SGS Technical Specifications 3.8.2 Onsite Power Distribution Systems
8. 1(2)-EOP-TRIP-1 Reactor Trip or Safety Injection
9. 1(2)-EOP-LOPA-1 Loss of All AC Power
10. S1(S2).OP-AB.LOOP-0001(Q) Loss of Off-Site Power
11. S1(S2).OP-AB.4KV-0001(Q) Loss of 1A(2A) 4KV Vital Bus
12. S1(S2).OP-AB.4KV-0002(Q) Loss of 1B(2B) 4KV Vital Bus
13. S1(S2).OP-AB.4KV-0003(Q) Loss of 1C(2C) 4KV Vital Bus

EAL Category: S – System Malfunction

EAL Subcategory: 1 – Loss of AC Power

Initiating Condition: AC power capability to vital buses reduced to a single power source for 15 minutes or longer such that any additional single failure would result in complete loss of AC power to vital buses

Mode Applicability: 1 - Power Operations, 2 - Startup, 3 - Hot Standby, 4 - Hot Shutdown

EAL# & Classification Level: **SA1.1 – ALERT**

EAL:

Loss of 4KV Vital Bus Power Sources (Offsite and Onsite) which results in the availability of only **one** 4KV Vital Bus Power Source (Offsite or Onsite)

AND

≥ 15 minutes have elapsed (Note 3)

Note 3: The Emergency Coordinator should NOT wait until the applicable time has elapsed, but should declare the event as soon as it is determined that the condition will likely exceed the applicable time.

Basis:

~~[*This IC and the associated EALs are intended to provide an escalation from IC SU1, "Loss of All Off-site AC Power To Emergency Busses for Greater Than 15 Minutes."*]~~

The condition indicated by this ~~IC~~ EAL is the degradation of the off-site and on-site AC power systems such that any additional single failure would result in a complete loss of AC power to vital buses~~station blackout~~. This condition could occur due to a loss of off-site power with a concurrent failure of all but one emergency diesel generator to supply power to its ~~emergency~~ vital busses. ~~Another related condition could be the loss of all off-site power and loss of on-site emergency diesel generators with only one train of emergency busses being fed from offsite power. backfed from the unit main generator, or the loss of on-site emergency diesel generators with only one train of emergency busses being fed backfed from off-site power.~~ The subsequent loss of this single power source would escalate the event to a SITE AREA EMERGENCY in accordance with EAL SS1.1.

Fifteen minutes was selected as a threshold to exclude transient or momentary losses of power.

~~[At multi-unit stations, the EALs should allow credit for operation of installed design features, such as cross-ties or swing diesels, provided that abnormal or emergency operating procedures address their use. However, these stations must also consider the impact of this condition on other shared safety functions in developing the site specific EAL.]~~

~~[Plants that have a proceduralized capability to cross-tie AC power from an off-site power supply of a companion unit may take credit for the redundant power source in the associated EAL for this IC.]~~**Explanation/Discussion/Definitions:**

"Availability" means the power source can be aligned to provide power to a vital bus within 15 minutes or is currently supplying power to at least one vital bus.

The availability of EDGs that have not been challenged to start during degradation of AC power sources to the 4KV vital buses should be based on meeting Technical Specification action requirements for loss of offsite AC power sources.

The AC power distribution is summarized in Attachment 2, page 2.

This hot condition Alert EAL is equivalent to the cold condition Unusual Event EAL CU1.1.

EAL Bases Reference(s):

1. NEI 99-01, Rev. 05 – SA5 Example EAL #1
2. UFSAR Figure 8.2-2 500 kV Switchyard Diagram
3. UFSAR Figure 8.3-1 Auxiliary Power System Diagram
4. UFSAR 8.1.1 Utility Grid System and Interconnections
5. UFSAR 8.3.1 Power
6. SGS Technical Specifications 3.8.1 A.C. Sources
7. SGS Technical Specifications 3.8.2 Onsite Power Distribution Systems
8. 1(2)-EOP-TRIP-1 Reactor Trip or Safety Injection
9. 1(2)-EOP-LOPA-1 Loss of All AC Power
10. S1(S2).OP-AB.LOOP-0001(Q) Loss of Off-Site Power
11. S1(S2).OP-AB.4KV-0001(Q) Loss of 1A(2A) 4KV Vital Bus
12. S1(S2).OP-AB.4KV-0002(Q) Loss of 1B(2B) 4KV Vital Bus
13. S1(S2).OP-AB.4KV-0003(Q) Loss of 1C(2C) 4KV Vital Bus

EAL Category: S – System Malfunction

EAL Subcategory: 1 – Loss of AC Power

Initiating Condition: Loss of all offsite power and all onsite AC power to vital buses for 15 minutes or longer

Mode Applicability: 1 - Power Operations, 2 - Startup, 3 - Hot Standby, 4 - Hot Shutdown

EAL# & Classification Level: **SS1.1 – SITE AREA EMERGENCY**

EAL:

Loss of **all** Power (Onsite and Offsite) to **all** 4KV Vital Buses

AND

≥ 15 minutes have elapsed (Note 3)

Note 3: The Emergency Coordinator should NOT wait until the applicable time has elapsed, but should declare the event as soon as it is determined that the condition will likely exceed the applicable time.

Basis:

Loss of all AC power to ~~emergency~~ vital busses compromises all plant safety systems requiring electric power including RHR, ECCS, Containment Heat Removal and the Ultimate Heat Sink (Service Water). Prolonged loss of all AC power to ~~emergency~~ vital busses will lead to loss of Fuel Clad, RCS, and Containment, thus this event can escalate to a GENERAL EMERGENCY.

Fifteen minutes was selected as a threshold to exclude transient or momentary losses of off-site power.

~~[*At multi-unit stations, the EALs should allow credit for operation of installed design features, such as cross-ties or swing diesels, provided that abnormal or emergency operating procedures address their use. However, these stations must also consider the impact of this condition on other shared safety functions in developing the site specific EAL.*]~~

~~[*Plants that have a proceduralized capability to cross-tie AC power from an off-site power supply of a companion unit may take credit for the redundant power source in the associated EAL for this IC.*]~~

Escalation to GENERAL EMERGENCY is via EALs in Category F, Fission Product Barrier Degradation, or ~~IC~~ EAL SG1.1, "Prolonged Loss of All Off-site Power and Prolonged Loss of All On-site AC Power."

Explanation/Discussion/Definitions:

The intent of this EAL is to classify degraded AC power events that result in a loss of all offsite 13.8 KV power sources to the 4KV vital buses along with a loss of all onsite power sources (EDGs).

The AC power distribution is summarized in Attachment 2, page 2.

This hot condition Site Area Emergency EAL is equivalent to the cold condition Alert EAL CA1.1.

EAL Bases Reference(s):

1. NEI 99-01, Rev. 05 – SS1 Example EAL #1
2. UFSAR Figure 8.2-2 500 kV Switchyard Diagram
3. UFSAR Figure 8.3-1 Auxiliary Power System Diagram
4. UFSAR 8.1.1 Utility Grid System and Interconnections
5. UFSAR 8.3.1 Power
6. SGS Technical Specifications 3.8.1 A.C. Sources
7. SGS Technical Specifications 3.8.2 Onsite Power Distribution Systems
8. 1(2)-EOP-TRIP-1 Reactor Trip or Safety Injection
9. 1(2)-EOP-LOPA-1 Loss of All AC Power
10. S1(S2).OP-AB.LOOP-0001(Q) Loss of Off-Site Power
11. S1(S2).OP-AB.4KV-0001(Q) Loss of 1A(2A) 4KV Vital Bus
12. S1(S2).OP-AB.4KV-0002(Q) Loss of 1B(2B) 4KV Vital Bus
13. S1(S2).OP-AB.4KV-0003(Q) Loss of 1C(2C) 4KV Vital Bus

EAL Category: S – System Malfunction

EAL Subcategory: 1 – Loss of AC Power

Initiating Condition: Prolonged loss of all offsite and all onsite AC power to vital buses

Mode Applicability: 1 - Power Operations, 2 - Startup, 3 - Hot Standby, 4 - Hot Shutdown

EAL# & Classification Level: **SG1.1 – GENERAL EMERGENCY**

EAL:

Loss of **all** Power (Onsite and Offsite) to **all** 4KV Vital Buses

AND

EITHER of the following:

- Restoration of at least **one** Vital Bus in **< 4 hrs** is NOT likely
- CFST Core Cooling RED or PURPLE path exists

Basis:

Loss of all AC power to ~~emergency~~ vital busses compromises all plant safety systems requiring electric power including RHR, ECCS, Containment Heat Removal and the Ultimate Heat Sink (Service Water). Prolonged loss of all AC power to ~~emergency~~ vital busses will lead to loss of Fuel Clad, RCS, and Containment, thus this event can escalate to a GENERAL EMERGENCY.

~~[*The (site-specific hours) to restore AC power can be based on a site blackout coping analysis performed in conformance with 10 CFR 50.63 and Regulatory Guide 1.155, "Station Blackout," as available. Appropriate allowance for off-site emergency response including evacuation of surrounding areas should be considered. Although this IC may be viewed as redundant to the Fission Product Barrier Degradation IC, its inclusion is necessary to better assure timely recognition and emergency response.*]~~

This ~~IC~~ EAL is specified to assure that in the unlikely event of a prolonged station blackout, timely recognition of the seriousness of the event occurs and that declaration of a GENERAL EMERGENCY occurs as early as is appropriate, based on a reasonable assessment of the event trajectory.

The likelihood of restoring at least one ~~emergency~~ vital bus should be based on a realistic appraisal of the situation since a delay in an upgrade decision based on only a chance of mitigating the event could result in a loss of valuable time in preparing and implementing public protective actions.

In addition, under these conditions, fission product barrier monitoring capability may be degraded.

~~[*Although it may be difficult to predict when power can be restored, it is necessary to give the Emergency Director a reasonable idea of how quickly (s)he may need to declare a General Emergency based on two major considerations:*~~

~~1. *Are there any present indications that core cooling is already degraded to the point that loss or potential loss of Fission Product Barriers is IMMINENT?*~~

~~2. *If there are no present indications of such core cooling degradation, how likely is it that power can be restored in time to assure that a loss of two barriers with a potential loss of the third barrier can be prevented?*~~

~~*Thus, indication of continuing core cooling degradation must be based on Fission Product Barrier monitoring with particular emphasis on Emergency Director judgment as it relates to IMMINENT loss or potential loss of fission product barriers and degraded ability to monitor fission product barriers.*]~~

Explanation/Discussion/Definitions:

The AC power distribution is summarized in Attachment 2, page 2.

Four hours is the station blackout coping time.

The status and availability of DC power may limit or prevent restoration activities. When prolonged powering of inverters and DC loads has occurred without AC power available for the battery chargers, DC voltage will degrade. This degradation of DC power may limit monitoring and assessment capabilities as instrumentation and control power may not be available. Since monitoring of overall plant conditions will be difficult with no AC power, CFST indications for determining barrier loss are used.

The likelihood of restoring at least one Vital Bus should be based on a realistic appraisal of the situation since a delay in an upgrade decision based on only a chance of mitigating the event could result in a loss of valuable time in preparing and implementing public protective actions. In addition, under these conditions, fission product barrier monitoring capability may be degraded. Although it may be difficult to predict when power can be restored, it is necessary to give the Emergency Coordinator reasonable idea of how quickly he may need to declare a General Emergency based on two major considerations:

1. Are there any present indications that core cooling is already degraded to the point that loss or potential loss of fission product barriers is imminent?

2. If there are no present indications of such core cooling degradation, how likely is it that power can be restored in time to assure that a loss of two barriers with a potential loss of the third barrier can be prevented?

It is estimated that several hours are required to fully evacuate the 10-mile EPZ. Taking into consideration the above factors, declaring a General Emergency leaves sufficient time for the offsite authorities to implement Protective Actions well before a radioactive release would

occur while providing sufficient time for on-site and off-site mitigation activities to restore AC power.

CFST status will not be used for event classification until the Control Room Staff has implemented the CFSTs. The Core Cooling CFST is illustrated in Attachment 2, page 4.

EAL Bases Reference(s):

1. NEI 99-01, Rev. 05 – SG1 Example EAL #1
2. UFSAR Figure 8.2-2 500 kV Switchyard Diagram
3. UFSAR Figure 8.3-1 Auxiliary Power System Diagram
4. UFSAR 8.1.1 Utility Grid System and Interconnections
5. UFSAR 8.3.1 Power
6. SGS Technical Specifications 3.8.1 A.C. Sources
7. SGS Technical Specifications 3.8.2 Onsite Power Distribution Systems
8. 1(2)-EOP-TRIP-1 Reactor Trip or Safety Injection
9. 1(2)-EOP-LOPA-1 Loss of All AC Power
10. S1(S2).OP-AB.LOOP-0001(Q) Loss of Off-Site Power
11. S1(S2).OP-AB.4KV-0001(Q) Loss of 1A(2A) 4KV Vital Bus
12. S1(S2).OP-AB.4KV-0002(Q) Loss of 1B(2B) 4KV Vital Bus
13. S1(S2).OP-AB.4KV-0003(Q) Loss of 1C(2C) 4KV Vital Bus
~~12~~14.UFSAR 3.12.1.1 Conformance to NRC Rule on Station Blackout
~~13~~15.ES-45.003(Q) Station Blackout Duration Calculation
~~14~~16.1(2)-EOP-CFST-1 Critical Safety Function Status Trees – Figure 2 Core Cooling Status Tree
~~15~~17.PSE&G Emergency Operating Procedure Setpoint Document Salem Units 1 & 2

This page intentionally blank

EAL Category: S – System Malfunction

EAL Subcategory: 2 – Loss of DC Power

Initiating Condition: Loss of all vital DC power for 15 minutes or longer

Mode Applicability: 1 - Power Operations, 2 - Startup, 3 - Hot Standby, 4 - Hot Shutdown

EAL# & Classification Level: **SS2.1 – SITE AREA EMERGENCY**

EAL:

< 114 VDC bus voltage indications on **All** 125 VDC vital buses for **≥ 15 minutes** (Note 3)

OR

< 25 VDC bus voltage indications on **both** 28 VDC vital buses for **≥ 15 minutes** (Note 3) **AND** loss of control of Safety Related Equipment from the Control Room has been confirmed

Note 3: The Emergency Coordinator should NOT wait until the applicable time has elapsed, but should declare the event as soon as it is determined that the condition will likely exceed the applicable time.

Basis:

Loss of all DC power compromises ability to monitor and control plant safety functions. Prolonged loss of all DC power will cause core uncovering and loss of containment integrity when there is significant decay heat and sensible heat in the reactor system.

~~[*Site specific bus voltage should be based on the minimum bus voltage necessary for the operation of safety related equipment. This voltage value should incorporate a margin of at least 15 minutes of operation before the onset of inability to operate those loads. This voltage is usually near the minimum voltage selected when battery sizing is performed. Typically the value for the entire battery set is approximately 105 VDC. For a 60 cell string of batteries the cell voltage is typically 1.75 Volts per cell. For a 58 string battery set the minimum voltage is typically 1.81 Volts per cell.*]~~

Fifteen minutes was selected as a threshold to exclude transient or momentary power losses.

Escalation to a General Emergency would occur by EALs in Category R, Abnormal Rad Levels/Rad~~iological~~ Effluent, or Category F, Fission Product Barrier Degradation.

Explanation/Discussion/Definitions:

The specified bus voltage indications (rounded for readability on Control Room instrumentation) are the minimum voltage requirements for operability of the 125 VDC buses and 28 VDC buses following battery discharge tests. Although continued operation may occur with degraded voltage, these values signify the minimum operable voltages allowed.

This Site Area Emergency EAL is the hot condition equivalent of the cold condition loss of DC power Unusual Event EAL CU2.1.

EAL Bases Reference(s):

1. NEI 99-01, Rev. 05, SS3 Example EAL #1
2. SC.MD-ST.125-0004 (Q) 125 Volt Station Batteries 18 Month Service Test and Associated Surveillance Testing Using BCT-2000
3. SC.MD-ST.28D-0004 (Q) 28 Volt Station Batteries 18 Month Service Test and Associated Surveillance Using BCT-2000
4. UFSAR 8.3.2 DC Power
5. SGS Technical Specifications 3.8.2.3 125 Volt DC Distribution - Shutdown
6. SGS Technical Specifications 3.8.2.5 28 Volt DC Distribution - Shutdown
7. S1(S2).OP-SO.125-0005 1(2)A 125VDC Bus Operation
8. S1(S2).OP-SO.125-0006 1(2)B 125VDC Bus Operation
9. S1(S2).OP-SO.125-0007 1(2)C 125VDC Bus Operation

EAL Category: S – System Malfunction

EAL Subcategory: 3 – ATWT / Criticality

Initiating Condition: Inadvertent Criticality

Mode Applicability: 3 - Hot Standby, 4 – Hot Shutdown

EAL# & Classification Level: **SU3.1 – UNUSUAL EVENT**

EAL:

UNPLANNED sustained positive startup rate observed on nuclear instrumentation

Basis:

This ~~IC~~ EAL addresses inadvertent criticality events. This ~~IC~~ EAL indicates a potential degradation of the level of safety of the plant, warranting a ~~NO~~UE classification. This ~~IC~~ EAL excludes inadvertent criticalities that occur during planned reactivity changes associated with reactor startups (e.g., criticality earlier than estimated).

~~[*This condition can be identified using period monitors/startup rate monitor. The term "sustained" is used in order to allow exclusion of expected short term positive periods/startup rates from planned control rod movements for PWRs and BWRs (such as shutdown bank withdrawal for PWRs). These short term positive periods/startup rates are the result of the increase in neutron population due to subcritical multiplication.*]~~

Escalation would be by the Fission Product Barrier Table, as appropriate to the operating mode at the time of the event.

Explanation/Discussion/Definitions:

The term "sustained" is used in order to allow exclusion of expected short term positive startup rates from planned fuel bundle or control rod movements during core alteration. These short term positive startup rates are the result of the increase in neutron population due to subcritical multiplication.

Positive reactor startup rate may be identified by:

- Source range startup rate indicators NI31D and NI32D
- NIS Recorder NR45
- Audio count rate
- SPDS
- Process Computer

This EAL is the hot condition equivalent of the cold condition EAL CU6.1.

Definitions:

UNPLANNED: A parameter change or an event that is not the result of an intended evolution and requires corrective or mitigative actions.

EAL Bases Reference(s):

1. NEI 99-01, Rev. 05, SU8 Example EAL #1
2. Technical Specifications 3.3.1.1 Reactor Trip System Instrumentation
3. UFSAR Table 7.5-2 Main Control Room Indicators and/or Recorders Available to Plant Operators to Monitor Significant Plant Parameters During Normal Operations
4. SC.IC-CC.NIS-0011(Q) N31 Source Range
5. SC.IC-CC.NIS-0012(Q) N32 Source Range

EAL Category: S – System Malfunction

EAL Subcategory: 3 – ATWT / Criticality

Initiating Condition: Automatic trip fails to shut down the reactor and the manual actions taken from the reactor control console are successful in shutting down the reactor

Mode Applicability: 1 - Power Operations, 2 - Startup

EAL# & Classification Level: **SA3.1 – ALERT**

EAL:

An automatic trip failed to shut down the reactor

AND

Manual trip actions taken at the reactor control console (reactor trip switches, trip bkr bezels, supply breakers 1/2E6D and 1/2G6D) successfully shut down the reactor as indicated by reactor power **< 5%**

Basis:

~~[~~The reactor should be considered shutdown when it producing less heat than the maximum decay heat load for which the safety systems are designed (~~typically 3 to~~ 5% power). ~~For plants using CSFSTs, t~~This EAL equates to the criteria used to determine a valid CFST ~~Subcriticality~~ Shutdown Margin Red Path. ~~For BWRs this EAL should be the APRM downscale trip setpoint.]~~

Manual ~~scram (~~trip~~)~~ actions taken at the reactor control console are any set of actions by the reactor operator(s) which causes or should cause control rods to be rapidly inserted into the core and shuts down the reactor.

~~[If t~~The ~~manual scram (~~reactor trip~~)~~ switches~~/pushbuttons~~ on the C~~c~~ontrol R~~r~~oom console ~~panels~~ are ~~considered~~ an automatic input into the Reactor Protection System~~, a~~. A failure to ~~scram (~~trip~~)~~ after actuating **both** reactor trip switches without any other automatic input would make this threshold applicable.~~]~~[MCD1]

This condition indicates failure of the automatic protection system to ~~scram (~~trip~~)~~ the reactor. This condition is more than a potential degradation of a safety system in that a front line automatic protection system did not function in response to a plant transient. Thus the plant safety has been compromised because design limits of the fuel may have been exceeded. An ALERT is indicated because conditions may exist that lead to potential loss of fuel clad or RCS and because of the failure of the Reactor Protection System to automatically shutdown the plant.

If manual actions taken at the reactor control console fail to shut_down the reactor, the event would escalate to a SITE AREA EMERGENCY.

Explanation/Discussion/Definitions:

This EAL identifies the need to cease critical reactor operations by actuation of the automatic Reactor Protection System (RPS) trip function. A reactor trip is automatically initiated by the Reactor Protection System (RPS) when certain continuously monitored parameters exceed predetermined setpoints.

Following a successful reactor trip, rapid insertion of the control rods occurs. Nuclear power promptly drops to a fraction of the original power level and then decays to a level several decades less with a negative period. The reactor power drop continues until reactor power reaches the point at which the influence of source neutrons on reactor power starts to be observable. A predictable post-trip response from an automatic reactor trip signal should therefore consist of a prompt drop in reactor power as sensed by the nuclear instrumentation and a lowering of power into the source range. A successful trip has therefore occurred when there is sufficient rod insertion from the trip of RPS to bring reactor power to below 5%, the value used to determine a valid Shutdown Margin Status Tree Red Path. CSFST Shutdown Margin red path is illustrated in Attachment 2, page 5.

For the purposes of emergency classification at the Alert level, successful manual trip actions are those which can be quickly performed from the reactor control console (i.e., reactor trip switches, trip bkr bezels, supply breakers 1/2E6D and 1/2G6D). EOP-FRSM-1 requires an Equipment Operator to locally open the Reactor Trip Breakers and trip the Rod Drive MG Sets. These actions are performed outside the Main Control Room and are NOT to be credited as a successful manual trip.

Following any automatic RPS trip signal EOPs prescribe insertion of redundant manual trip signals to back up the automatic RPS trip function and ensure reactor shutdown is achieved. Even if the first subsequent manual trip signal fully inserts all control rods immediately after the initial failure of the automatic trip, the lowest level of classification that must be declared is an Alert.

In the event that the operator identifies a reactor trip is imminent and initiates a successful manual reactor trip before the automatic trip setpoint is reached, no declaration is required. The successful manual trip of the reactor before it reaches its automatic trip setpoint or reactor trip signals caused by instrumentation channel failures do not lead to a potential fission product barrier loss.

If manual reactor trip actions fail to reduce reactor power below 5%, the event escalates to the Site Area Emergency under EAL SS3.1.

If by procedure, operator actions include the initiation of an immediate manual trip following receipt of an automatic trip signal and there are no clear indications that the automatic trip failed (such as a time delay following indications that a trip setpoint was exceeded), it may be

difficult to determine if the reactor was shut down because of automatic trip or manual actions. If a subsequent review of the trip actuation indications reveals that the automatic trip did not cause the reactor to be shut down, consideration should be given to evaluating the fuel for potential damage, and the reporting requirements of 10CFR50.72 should be considered for the transient event.

EAL Bases Reference(s):

1. NEI 99-01, Rev. 05, SA2 Example EAL #1
2. UFSAR 7.1.1.1 Reactor Trip Systems
3. UFSAR Table 7.2-1 List of Reactor Trips, Engineered Safety Features, Containment and Steam Line Isolation and Auxiliary Feedwater
4. Technical Specifications Table 3.3-1 Reactor Trip System Instrumentation
5. 1(2)-EOP-TRIP-1 Reactor Trip or Safety Injection
6. 1(2)-EOP-CFST-1 Critical Safety Function Status Trees – Figure 1 Shutdown Margin Status Tree
7. 1(2)-EOP-FRSM-1 Response to Nuclear Power Generation

This page intentionally blank

EAL Category: S – System Malfunction

EAL Subcategory: 3 – ATWT / Criticality

Initiating Condition: Automatic trip fails to shut down the reactor and manual actions taken from the reactor control console are not successful in shutting down the reactor.

Mode Applicability: 1 - Power Operations, 2 - Startup

EAL# & Classification Level: **SS3.1 – SITE AREA EMERGENCY**

EAL:

An automatic trip failed to shut down the reactor

AND

Manual trip actions taken at the reactor control console (reactor trip switches, trip bkr bezels, supply breakers 1/2E6D and 1/2G6D) do NOT shut down the reactor as indicated by reactor power **≥ 5%**

Basis:

~~[~~The reactor should be considered shutdown when ~~it~~ producing less heat than the maximum decay heat load for which the safety systems are designed (~~typically 3 to~~ 5% power). ~~For plants using CSFSTs, t~~This EAL equates to the criteria used to determine a valid CFST ~~Subcriticality~~ Shutdown Margin Red Path. ~~For BWRs this EAL should be the APRM downscale trip setpoint.]~~

Under these conditions, the reactor is producing more heat than the maximum decay heat load for which the safety systems are designed and efforts to bring the reactor subcritical are unsuccessful. A SITE AREA EMERGENCY is warranted because conditions exist that lead to **IMMINENT** loss or potential loss of both fuel clad and RCS.

~~[*The reactor should be considered shutdown when it producing less heat than the maximum decay heat load for which the safety systems are designed (typically 3 to 5% power). For plants using CSFSTs, this EAL equates to the criteria used to determine a valid Subcriticality Red Path. For BWRs this EAL should be the APRM downscale trip setpoint.*]~~

Manual ~~scram (~~trip~~)~~ actions taken at the reactor control console are any set of actions by the reactor operator(s) at which causes or should cause control rods to be rapidly inserted into the core and shuts down the reactor.

~~Manual scram (trip) actions are not considered successful if action away from the reactor control console is required to scram (trip) the reactor. This EAL is still applicable even if~~

~~actions taken away from the reactor control console are successful in shutting the reactor down because the design limits of the fuel may have been exceeded or because of the gross failure of the Reactor Protection System to shut down the plant.~~

~~[*Although this IC may be viewed as redundant to the Fission Product Barrier Degradation IC, its inclusion is necessary to better assure timely recognition and emergency response.*]~~

Escalation of this event to a GENERAL EMERGENCY would be due to a prolonged condition leading to an extreme challenge to either core-cooling or heat removal.

Explanation/Discussion/Definitions:

This EAL addresses any automatic reactor trip signal followed by a manual trip that fails to shut down the reactor to an extent the reactor is producing energy in excess of the heat load for which the safety systems were designed.

For the purposes of emergency classification at the Site Area Emergency level, successful manual trip actions are those which can be quickly performed from the reactor control console (i.e., reactor trip switches, trip bkr bezels, supply breakers 1(2)E6D and 1(2)G6D). EOP-FRSM-1 requires an Equipment Operator to locally open the Reactor Trip Breakers and trip the Rod Drive MG Sets. These actions are performed outside the Main Control Room and are not to be credited as a successful manual trip.

For emergency classification purposes, the reactor should be considered shutdown when it is producing less heat than the maximum decay heat load for which the safety systems are designed. This equates to **< 5%** power, the value used to determine a valid Shutdown Margin Status Tree Red Path. CSFST Shutdown Margin red path is illustrated in Attachment 2, page 5.

Entry into EOP-FRSM-1 will be required if the manual trip from the console "trip handles" or Turbine Trip and P-9 (≥ 49% Power) is not successful. EOP-FRSM-1 requires an Equipment Operator to locally open the Reactor Trip Breakers and trip the Rod Drive MG Sets. Since this action is outside the Control Room, a successful remote Reactor Trip will still require classification under this EAL because the design limits of the fuel may have been exceeded or because of the gross failure of the RPS to shut down the plant. The threshold value of **< 5%** reactor power was selected to be consistent with CFST EOP-FRSM-1 entry criteria. Mode 2 is included in this EAL to include events which result in a return to > 5% reactor power from some lower value.

Escalation of this event to a GENERAL EMERGENCY would be under EAL SG3.1 or Emergency Coordinator judgment.

Definitions:

IMMINENT: Mitigation actions have been ineffective, additional actions are not expected to be successful, and trended information indicates that the event or condition will occur within approximately 2 hours (unless a different time is specified).

EAL Bases Reference(s):

1. NEI 99-01, Rev. 05, SS2 Example EAL #1
2. 1(2)-EOP-TRIP-1 Reactor Trip or Safety Injection
3. 1(2)-EOP-FRSM-1 Response to Nuclear Power Generation
4. 1(2)-EOP-CFST-1 Critical Safety Function Status Trees – Figure 1 Shutdown Margin Status Tree

EAL Category: S – System Malfunction

EAL Subcategory: 3 – ATWT / Criticality

Initiating Condition: Automatic trip and all manual actions fail to shut down the reactor and indication of an extreme challenge to the ability to cool the core exists

Mode Applicability: 1 - Power Operations, 2 - Startup

EAL# & Classification Level: **SG3.1 – GENERAL EMERGENCY**

EAL:

An automatic trip failed to shut down the reactor

AND

All manual actions do NOT shut down the reactor as indicated by reactor power **≥ 5%**

AND

EITHER of the following:

- CFST Core Cooling RED path exists
- CFST Heat Sink RED path exists due to actual loss of secondary heat sink and heat sink is required

Basis:

[The reactor should be considered shutdown when it producing less heat than the maximum decay heat load for which the safety systems are designed (~~typically 3 to~~ 5% power). ~~For plants using CSFSTs, t~~This EAL equates to the criteria used to determine a valid CFST ~~Subcriticality~~ Shutdown Margin Red Path. ~~For BWRs this EAL should be the APRM downscale trip setpoint.~~]

Under these conditions, the reactor is producing more heat than the maximum decay heat load for which the safety systems are designed and efforts to bring the reactor subcritical are unsuccessful.

~~[The reactor should be considered shutdown when it producing less heat than the maximum decay heat load for which the safety systems are designed (typically 3 to 5% power). For plants using CSFSTs, this EAL equates to the criteria used to determine a valid Subcriticality Red Path. For BWRs this EAL should be the APRM downscale trip setpoint.]~~

[~~*For PWRs, the extreme challenge to the ability to cool the core is intended to mean that the core exit temperatures are at or approaching 1200 degrees F or that the reactor vessel water level is below the top of active fuel. For plants using CSFSTs, this EAL equates to a Core Cooling RED condition combined with a Subcriticality RED condition.*~~]

[~~*For BWRs, the extreme challenge to the ability to cool the core is intended to mean that the reactor vessel water level cannot be restored and maintained above Minimum Steam Cooling RPV Water Level as described in the EOP bases.*~~]

[~~*Another consideration is the inability to initially remove heat during the early stages of this sequence. For PWRs, if emergency feedwater flow is insufficient to remove the amount of heat required by design from at least one steam generator, an extreme challenge should be considered to exist. For plants using CSFSTs, this EAL equates to a Heat Sink RED condition combined with a Subcriticality RED condition.*~~]

[~~*For BWRs, considerations include inability to remove heat via the main condenser, or via the suppression pool or torus (e.g., due to high pool water temperature).*~~]

In the event either of these challenges exists at a time that the reactor has not been brought below the power associated with the safety system design, a core melt sequence exists. In this situation, core degradation can occur rapidly. For this reason, the GENERAL EMERGENCY declaration is intended to be anticipatory of the fission product barrier table declaration to permit maximum off-site intervention time.

Explanation/Discussion/Definitions:

For emergency classification purposes, the reactor should be considered shutdown when it is producing less heat than the maximum decay heat load for which the safety systems are designed. This equates to **< 5%** power, the value used to determine a valid Shutdown Margin Status Tree Red Path. CSFST Shutdown Margin red path is illustrated in Attachment 2, page 5.

Entry into EOP-FRSM-1 will be required if the manual trip from the console "trip handle" or Turbine Trip and P-9 (≥ 49% Power) is not successful. EOP-FRSM-1 requires an Equipment Operator to locally open the Reactor Trip Breakers and trip the Rod Drive MG Sets. Since this action is outside the control room, a successful remote Reactor Trip will require classification under this EAL. The threshold value of 5% reactor power was selected to be consistent with CFST EOP-FRSM-1 entry criteria. For events, which result in a return to > 5% reactor power from some lower value, classification under this EAL would be required.

Further degradation is indicated by the occurrence of valid CFST Core Cooling red path or Heat Sink red path. The Core Cooling red path is indicative of a loss of core cooling and the Heat Sink red path of a potential loss of core cooling. CFST status will not be used for event classification until the Control Room Staff has implemented the CFSTs. CFST Core Cooling and CFST Heat Sink are illustrated in Attachment 2 page 4 and 6, respectively.

If the Heat Sink red path is due to a procedurally directed action, classification under this EAL is not required. EOP-FRSM-1 directs the operators to minimize feedwater flow to the steam generators in order to minimize cooldown and control reactivity. A heat sink red path is generated as a result of this operator action. However, actual loss of control of the heat sink does not occur due to these actions. In addition, the heat sink red path is precursor to a loss of core cooling and is backed up by the core cooling red path. Declaration of a General Emergency is not justified if the heat sink red path is a result of procedurally directed actions.

EAL Bases Reference(s):

1. NEI 99-01, Rev. 05, SG2 Example EAL #1
2. 1(2)-EOP-FRSM-1 Response to Nuclear Power Generation
3. 1(2)-EOP-TRIP-1 Reactor Trip or Safety Injection
4. 1(2)-EOP-CFST-1 Critical Safety Function Status Trees – Figure 1 Shutdown Margin Status Tree
5. PSE&G Emergency Operating Procedure Setpoint Document Salem Units 1 & 2
6. 1(2)-EOP-CFST-1 Critical Safety Function Status Trees – Figure 2 Core Cooling Status Tree
7. 1(2)-EOP-CFST-1 Critical Safety Function Status Trees – Figure 3 Heat Sink Status Tree

EAL Category: S – System Malfunction

EAL Subcategory: 4 – Inability to Reach or Maintain Shutdown Conditions

Initiating Condition: Inability to reach required shutdown within Technical Specification limits

Mode Applicability: 1 - Power Operations, 2 - Startup, 3 - Hot Standby, 4 - Shutdown

EAL# & Classification Level: **SU4.1 – UNUSUAL EVENT**

EAL:

Plant is NOT brought to required operating mode within Technical Specifications LCO action statement time

Basis:

Limiting Conditions of Operation (LCOs) require the plant to be brought to a required operating mode when the Technical Specification required configuration cannot be restored. Depending on the circumstances, this may or may not be an emergency or precursor to a more severe condition. In any case, the initiation of plant shutdown required by the site Technical Specifications requires a four hour report under 10 CFR 50.72 (b) Non-emergency events. The plant is within its safety envelope when being shut down within the allowable action statement time in the Technical Specifications. An immediate ~~NO~~UE is required when the plant is not brought to the required operating mode within the allowable action statement time in the Technical Specifications. Declaration of a ~~NO~~UE is based on the time at which the LCO-specified action statement time period elapses under the site Technical Specifications and is not related to how long a condition may have existed.

~~[*Other required Technical Specification shutdowns that involve precursors to more serious events are addressed by other System Malfunction, Hazards, or Fission Product Barrier Degradation ICs.*]~~

Explanation/Discussion/Definitions:

Depending on the circumstances, this may or may not be a precursor to a more severe condition. A shutdown required by the Technical Specifications requires a report under 10 CFR 50.72 (b) non-emergency events. The plant is within its safety envelope when actions are completed within the allowable Action Statement time in the T/S. If the times specified within the Action Statements are not met, the plant may be in an unsafe condition.

EAL Bases Reference(s):

1. NEI 99-01, Rev. 05, SU2 Example EAL #1
2. SGS Technical Specifications

This page intentionally blank.

EAL Category: S – System Malfunction

EAL Subcategory: 5 – Instrumentation

Initiating Condition: **UNPLANNED** loss of safety system annunciation or indication in the Control Room for 15 minutes or longer

Mode Applicability: 1 - Power Operations, 2 - Startup, 3 - Hot Standby, 4 - Hot Shutdown

EAL# & Classification Level: **SU5.1 – UNUSUAL EVENT**

EAL:

UNPLANNED loss of **> approximately 75%** of Control Room Overhead Annunciators for **≥ 15 minutes** (Note 3)

OR

UNPLANNED loss of **> approximately 75%** of Control Room Indications associated with the following safety functions for **≥ 15 minutes** (Note 3):

- Reactivity Control
- RCS Inventory
- Decay Heat Removal
- Fission Product Barriers

Note 3: The Emergency Coordinator should NOT wait until the applicable time has elapsed, but should declare the event as soon as it is determined that the condition will likely exceed the applicable time.

Basis:

This ~~IC and its associated~~ EAL ~~are~~ is intended to recognize the difficulty associated with monitoring changing plant conditions without the use of a major portion of the annunciation or indication equipment.

Recognition of the availability of computer based indication equipment is considered ~~[*e.g., SPDS, plant computer, etc.*]~~.

"Planned" loss of annunciators or indicators includes scheduled maintenance and testing activities.

Quantification is arbitrary, however, it is estimated that if approximately 75% of the ~~safety system~~ annunciators or indicators are lost, there is an increased risk that a degraded plant condition could go undetected. It is not intended that plant personnel perform a detailed count of the instrumentation lost but use the value as a judgment threshold for determining the severity of the plant conditions.

It is further recognized that most plant designs provide redundant safety system indication powered from separate uninterruptible power supplies. While failure of a large portion of annunciators is more likely than a failure of a large portion of indications, the concern is included in this EAL due to difficulty associated with assessment of plant conditions. The loss of specific, or several, safety system indicators should remain a function of that specific system or component operability status. This will be addressed by the specific Technical Specification. The initiation of a Technical Specification imposed plant shutdown related to the instrument loss will be reported via 10 CFR 50.72. If the shutdown is not in compliance with the Technical Specification action, the ~~NO~~UE is based on SU4.1~~2~~ "Inability to Reach Required Shutdown Within Technical Specification Limits."

~~[*Site specific annunciators or indicators for this EAL must include those identified in the Abnormal Operating Procedures, in the Emergency Operating Procedures, and in other EALs (e.g., area, process, and/or effluent rad monitors, etc.).*]~~

Fifteen minutes was selected as a threshold to exclude transient or momentary power losses.

~~[*Due to the limited number of safety systems in operation during cold shutdown, refueling, and defueled modes, no IC is indicated during these modes of operation.*]~~

This ~~NO~~UE will be escalated to an ALERT based on a concurrent loss of compensatory indications or a **SIGNIFICANT TRANSIENT** is occurring during a loss of annunciators/indications.

~~[*Other required Technical Specification shutdowns that involve precursors to more serious events are addressed by other System Malfunction, Hazards, or Fission Product Barrier Degradation ICs.*]~~

Explanation/Discussion/Definitions:

This EAL recognizes the difficulty associated with monitoring changing plant conditions without the use of a major portion of the annunciation or indication equipment. A **UNPLANNED** loss of most or all Control Room Overhead Annunciators or other key control room safety function indicators without a plant transient in MODES 1, 2, 3, or 4 for **≥ 15 minutes** warrants a heightened awareness by Control Room Operators. Quantification of **> 75%** is left to the discretion of the Shift Manager (SM), and is considered approximately **75%**. It is not intended that a detailed count be performed, but that a rough approximation be used to determine the severity of the loss.

OP-AB.ANN-0001 (Q) details increased monitoring and surveillance requirements as well as alternate indicators. **15 minutes** is used as a threshold to exclude transient or momentary

power losses. The **15 minutes clock** starts when the annunciators or other key Control Room safety function indications have been lost, or are determined to have been lost. If upon time of discovery it is determined that the annunciators or key safety function indications have been lost for at least **15 minutes** prior to discovery, classification should be made under this EAL regardless of time required for restoration. If it is determined that the annunciators were lost for at least **15 minutes** with the annunciators now available at the time of discovery, classification is not required under this EAL, but a review of the "After The Fact" RAL (11.6) should be completed.

Definitions:

UNPLANNED: a parameter change or an event that is not the result of an intended evolution and requires corrective or mitigative actions. An **UNPLANNED** loss of annunciators and loss other key control room indication systems excludes scheduled maintenance and testing activities.

SIGNIFICANT TRANSIENT: An **UNPLANNED** event based on EC judgment, but includes as a minimum any one of the following: (1) automatic turbine runback greater than 25% thermal reactor power, (2) electrical load rejection greater than 25% full electrical load, (3) Reactor Trip, or (4) Safety Injection Activation.

EAL Bases Reference(s):

1. NEI 99-01, Rev. 05, SU3 Example EAL #1
2. S1(S2).OP-AB.ANN-0001(Q) Loss of Overhead Annunciator System
3. UFSAR 7.7.2.10 Plant Alarm and Annunciator Systems
4. UFSAR Table 7.7-2 Overhead Annunciator Groupings

This page intentionally blank

EAL Category: S – System Malfunction

EAL Subcategory: 5 – Instrumentation

Initiating Condition: **UNPLANNED** loss of safety system annunciation or indication in the Control Room with either (1) a **SIGNIFICANT TRANSIENT** in progress, or (2) compensatory indicators unavailable

Mode Applicability: 1 - Power Operations, 2 - Startup, 3 - Hot Standby, 4 - Hot Shutdown

EAL# & Classification Level: **SA5.1 – ALERT**

EAL:

UNPLANNED loss of **> approximately 75%** of Control Room Overhead Annunciators for **≥ 15 minutes** (Note 3)

OR

UNPLANNED loss of **> approximately 75%** of Control Room Indications associated with the following safety functions for **≥ 15 minutes** (Note 3):

- Reactivity Control
- RCS Inventory
- Decay Heat Removal
- Fission Product Barriers

AND

EITHER of the following:

- A **SIGNIFICANT TRANSIENT** is in progress, **Table S-1**
- Compensatory indications are NOT available per OP-AB.ANN-0001(Q)

Note 3: The Emergency Coordinator should NOT wait until the applicable time has elapsed, but should declare the event as soon as it is determined that the condition will likely exceed the applicable time.

Table S-1 SIGNIFICANT TRANSIENTS
• Automatic turbine runback **> 25%** thermal reactor power • Electrical load rejection **> 25%** full electrical **load** • Reactor Trip • Safety Injection Activation

Basis:

This ~~IC~~ EAL is intended to recognize the difficulty associated with monitoring changing plant conditions without the use of a major portion of the annunciation or indication equipment during a **SIGNIFICANT TRANSIENT**.

~~[*Recognition of the availability of computer based indication equipment is considered (e.g., SPDS, plant computer, etc.).*]~~

"Planned" loss of annunciators or indicators includes scheduled maintenance and testing activities.

Quantification is arbitrary, however, it is estimated that if **approximately 75%** of the ~~safety system~~ annunciators or indicators are lost, there is an increased risk that a degraded plant condition could go undetected. It is not intended that plant personnel perform a detailed count of the instrumentation lost but use the value as a judgment threshold for determining the severity of the plant conditions. It is also not intended that the Shift ~~Supervisor~~ Manager be tasked with making a judgment decision as to whether additional personnel are required to provide increased monitoring of system operation.

It is further recognized that most plant designs provide redundant safety system indication powered from separate uninterruptible power supplies. While failure of a large portion of annunciators is more likely than a failure of a large portion of indications, the concern is included in this EAL due to difficulty associated with assessment of plant conditions. The loss of specific, or several, safety system indicators should remain a function of that specific system or component operability status. This will be addressed by the specific Technical Specification. The initiation of a Technical Specification imposed plant shutdown related to the instrument loss will be reported via 10 CFR 50.72. If the shutdown is not in compliance with the Technical Specification action, the ~~NO~~UE is based on ~~SU2~~ SU4.1 "Inability to Reach Required Shutdown Within Technical Specification Limits."

~~[*Site-specific annunciators or indicators for this EAL must include those identified in the Abnormal Operating Procedures, in the Emergency Operating Procedures, and in other EALs (e.g., area, process, and/or effluent rad monitors, etc.).*]~~

"Compensatory indications" in this context includes computer based information such as the ~~process~~ Plant Ccomputer Ssystem and SPDS (see OP-AB.ANN-0001(Q)). ~~[*This should include all computer systems available for this use depending on specific plant design and subsequent retrofits.*]~~ If both a major portion of the annunciation system and all computer monitoring are unavailable, the ALERT is required.

~~[*Due to the limited number of safety systems in operation during cold shutdown, refueling and defueled modes, no IC is indicated during these modes of operation.*]~~

Fifteen minutes was selected as a threshold to exclude transient or momentary power losses.

This ALERT will be escalated to a SITE AREA EMERGENCY if the operating crew cannot monitor the transient in progress due to a concurrent loss of compensatory indications with a **SIGNIFICANT TRANSIENT** in progress during the loss of annunciation or indication.

~~[*Other required Technical Specification shutdowns that involve precursors to more serious events are addressed by other System Malfunction, Hazards, or Fission Product Barrier Degradation ICs.*]~~

Explanation/Discussion/Definitions:

OP-AB.ANN-0001(Q) details increased monitoring and surveillance requirements as well as alternate indicators during a loss of Control Room Overhead Annunciators.

The **15 minute clock** starts when the annunciators or other key control room safety function indications have been lost, or are determined to have been lost. If upon time of discovery it is determined that the annunciators or key safety function indications have been lost for at least **15 minutes** prior to discovery, classification should be made under this EAL regardless of time required for restoration.

SIGNIFICANT TRANSIENTS are listed in Table S-1 and include response to automatic or manually initiated functions such as reactor trips, automatic turbine runback greater than 25% thermal reactor power, electrical load rejection greater than 25% full electrical load, or Safety Injection activation.

The Plant Computer System and Safety Parameter Display System (SPDS) serve as redundant indicators which may be utilized as compensatory measures in lieu of the Control Room Overhead Annunciators and Control Room indicators associated with safety functions.

The judgment of the Shift Manager should be used as the threshold for determining the severity of the plant conditions.

If the operating crew cannot monitor the transient in progress, the ALERT escalates to a SITE AREA EMERGENCY under EAL SS5.1.

Definitions:

UNPLANNED: a parameter change or an event that is not the result of an intended evolution and requires corrective or mitigative actions. An **UNPLANNED** loss of annunciators and loss other key control room indication systems excludes scheduled maintenance and testing activities.

SIGNIFICANT TRANSIENT: An **UNPLANNED** event based on EC judgment, but includes as a minimum any one of the following: (1) automatic turbine runback greater than 25% thermal reactor power, (2) electrical load rejection greater than 25% full electrical load, (3) Reactor Trip, or (4) Safety Injection Activation.

EAL Bases Reference(s):

1. NEI 99-01, Rev. 05, SA5 Example EAL #1
2. S1(S2).OP-AB.ANN-0001(Q) Loss of Overhead Annunciator System
3. UFSAR 7.7.2.10 Plant Alarm and Annunciator Systems
4. UFSAR Table 7.7-2 Overhead Annunciator Grouping

EAL Category: S – System Malfunction

EAL Subcategory: 5 – Instrumentation

Initiating Condition: Inability to monitor a **SIGNIFICANT TRANSIENT** in progress

Mode Applicability: 1 - Power Operations, 2 - Startup, 3 - Hot Standby, 4 - Hot Shutdown

EAL# & Classification Level: **SS5.1 – SITE AREA EMERGENCY**

EAL:

Loss of **> approximately 75%** of Control Room Overhead Annunciators for **≥ 15 minutes** (Note 3)

OR

Loss of **> approximately 75%** of Control Room Indications associated with the following safety functions for **≥ 15 minutes** (Note 3):

- Reactivity Control
- RCS Inventory
- Decay Heat Removal
- Fission Product Barriers

AND

A **SIGNIFICANT TRANSIENT** is in progress, **Table S-1**

AND

Compensatory indications are NOT available per OP-AB.ANN-0001(Q)

Note 3: The Emergency Coordinator should NOT wait until the applicable time has elapsed, but should declare the event as soon as it is determined that the condition will likely exceed the applicable time.

Table S-1 SIGNIFICANT TRANSIENTS
• Automatic turbine runback **> 25%** thermal reactor power • Electrical load rejection **> 25%** full electrical **load** • Reactor Trip • Safety Injection Activation

Basis:

This ~~IC~~ EAL is intended to recognize the threat to plant safety associated with the complete loss of capability of the control room staff to monitor plant response to a **SIGNIFICANT TRANSIENT**.

"Planned" and "**UNPLANNED**" actions are not differentiated since the loss of instrumentation of this magnitude is of such significance during a transient that the cause of the loss is not ~~an ameliorating~~ a factor.

Quantification is arbitrary, however, it is estimated that if **approximately 75%** of the ~~safety system~~ annunciators or indicators are lost, there is an increased risk that a degraded plant condition could go undetected. It is not intended that plant personnel perform a detailed count of the instrumentation lost but use the value as a judgment threshold for determining the severity of the plant conditions. It is also not intended that the Shift ~~Supervisor~~ Manager be tasked with making a judgment decision as to whether additional personnel are required to provide increased monitoring of system operation.

It is further recognized that most plant designs provide redundant safety system indication powered from separate uninterruptible power supplies. While failure of a large portion of annunciators is more likely than a failure of a large portion of indications, the concern is included in this EAL due to difficulty associated with assessment of plant conditions. The loss of specific, or several, safety system indicators should remain a function of that specific system or component operability status. This will be addressed by the specific Technical Specification. The initiation of a Technical Specification imposed plant shutdown related to the instrument loss will be reported via 10 CFR 50.72. If the shutdown is not in compliance with the Technical Specification action, the ~~NO~~UE is based on ~~SU2~~ SU4.1 "Inability to Reach Required Shutdown Within Technical Specification Limits."

A SITE AREA EMERGENCY is considered to exist if the C~~c~~ontrol R~~r~~oom staff cannot monitor safety functions needed for protection of the public while a significant transient is in progress.

~~[*Site specific annunciators for this EAL should be limited to include those identified in the Abnormal Operating Procedures, in the Emergency Operating Procedures, and in other EALs (.g., area, process, and/or effluent rad monitors, etc.)*]~~

Site specific indications needed to monitor safety functions necessary for protection of the public must include Ceontrol Rroom indications, computer generated indications and dedicated annunciation capability.

[~~*The specific indications should be those used to determine such functions as the ability to shut down the reactor, maintain the core cooled, to maintain the reactor coolant system intact, maintain the spent fuel cooled, and to maintain containment intact.*~~]

"Compensatory indications" in this context includes computer based information such as the ~~process~~ Plant Ceomputer Ssystem and SPDS (see OP-AB.ANN-0001(Q)). This should include all computer systems available for this use depending on specific plant design and subsequent retrofits.

Fifteen minutes was selected as a threshold to exclude transient or momentary power losses.

[~~*Due to the limited number of safety systems in operation during cold shutdown, refueling and defueled modes, no IC is indicated during these modes of operation.*~~]

[~~*Due to the limited number of safety systems in operation during cold shutdown, refueling and defueled modes, no IC is indicated during these modes of operation.*~~][~~*Other required Technical Specification shutdowns that involve precursors to more serious events are addressed by other System Malfunction, Hazards, or Fission Product Barrier Degradation ICs.*~~]

Explanation/Discussion/Definitions:

OP-AB.ANN-0001(Q) details increased monitoring and surveillance requirements as well as alternate indicators during a loss of Control Room Overhead Annunciators.

The **15 minute clock** starts when the annunciators or other key control room safety function indications have been lost, or are determined to have been lost. If upon time of discovery it is determined that the annunciators or key safety function indications have been lost for at least **15 minutes** prior to discovery, classification should be made under this EAL regardless of time required for restoration.

SIGNIFICANT TRANSIENTS are listed in Table S-1.

The Plant Process Computer System (PPC) and Safety Parameter Display System (SPDS) serve as redundant indicators which may be utilized as compensatory measures in lieu of the Control Room Overhead Annunciators and Control Room indicators associated with safety functions.

The judgment of the Shift Manager should be used as the threshold for determining the severity of the plant conditions.

Definitions:

UNPLANNED: a parameter change or an event that is not the result of an intended evolution and requires corrective or mitigative actions. An **UNPLANNED** loss of annunciators and loss other key control room indication systems excludes scheduled maintenance and testing activities.

SIGNIFICANT TRANSIENT: An **UNPLANNED** event based on EC judgment, but includes as a minimum any one of the following: (1) automatic turbine runback greater than 25% thermal reactor power, (2) electrical load rejection greater than 25% full electrical load, (3) Reactor Trip, or (4) Safety Injection Activation.

EAL Bases Reference(s):

1. NEI 99-01, Rev. 05, SS6 Example EAL #1
2. S1(S2).OP-AB.ANN-0001(Q) Loss of Overhead Annunciator System
3. UFSAR 7.7.2.10 Plant Alarm and Annunciator Systems
4. UFSAR Table 7.7-2 Overhead Annunciator Grouping

This page intentionally blank

EAL Category: S – System Malfunction

EAL Subcategory: 6 – Communications

Initiating Condition: Loss of all onsite or offsite communications capabilities

Mode Applicability: 1 - Power Operations, 2 - Startup, 3 - Hot Standby, 4 - Hot Shutdown

EAL# & Classification Level: **SU6.1 – UNUSUAL EVENT**

EAL:

Loss of **all Table S-2** Onsite communication methods affecting the ability to perform routine operations

OR

Loss of **all Table S-2** Offsite communication methods affecting the ability to perform offsite notifications

Table S-2 Communications Systems		
System	**Onsite**	**Offsite**
Direct Inward Dial System (DID)	X	X
Station Page System (Gaitronics)	X	
Station Radio System	X	
Nuclear Emergency Telephone System (NETS)		X
Centrex Phone System (ESSX)		X
NRC (ENS)		X

Basis:

The purpose of this ~~IC and its associated~~ EAL~~s~~ is to recognize a loss of communications capability that either defeats the plant operations staff ability to perform routine tasks necessary for plant operations or the ability to communicate issues with off-site authorities.

~~[*The loss of off-site communications ability is expected to be significantly more comprehensive than the condition addressed by 10 CFR 50.72.*]~~

The availability of one method of ordinary off-site communications is sufficient to inform federal, state, and local authorities of plant problems. This EAL is intended to be used only when extraordinary means (e.g., relaying of information from non-routine radio transmissions, individuals being sent to off-site locations, etc.) are being used to make communications possible.

~~[*Site specific list for on-site communications loss must encompass the loss of all means of communications (e.g., commercial telephones, sound powered phone systems, page party system (Gaitronics) and radios / walkie talkies) routinely used for operations.*]~~

~~[*Site specific list for off-site communications loss must encompass the loss of all means of communications with off-site authorities. This should include the ENS, commercial telephone lines, telecopy transmissions, and dedicated phone systems that are routinely used for offsite emergency notifications.*]~~

Explanation/Discussion/Definitions:

Onsite and offsite communications include one or more of the systems listed in Table S-2.

Direct Inward Dial System (DID)

Direct Inward Dial (DID) system is named for the dominant feature of the commercial telephone service provided by the local telephone company for the site. DID allows station telephones to be extensions or tied lines of the same systems. These exchanges can take advantage of backup power supplies provided to the stations, and may use either PSEG microwave, commercial telephone system microwave, or buried cable transmission systems to maintain external communications. This commercial telephone service is available as an additional backup for the NETS and Centrex/ESSX 1 system.

Station Page System (Gaitronics)

Gaitronics is a completely transistorized voice communication system with five voice channels: one page and five party. The system is designed for use in extreme environmental conditions such as dust, moisture, heat and noise. The system consists of handsets, speakers and their associated amplifiers. The power for this system is 120 volts AC from an inverted DC source to provide reliable communications during an emergency.

Station Radio System

The Operations and Fire Protection Department UHF radio system is a multi-frequency system used routinely by both station Operations Departments and the Fire Protection Department. When an emergency event is declared, these radio frequencies serve both station Operations Support Centers (OSC).

Nuclear Emergency Telephone System (NETS)

The Nuclear Emergency Telecommunications System (NETS) is a privately controlled, self-contained telephone exchange that operates as a closed system, not accessible from other phone exchanges. This feature allows the system to be dedicated to emergency response use. The system may use PSEG microwave, commercial telephone system microwave, fiber optics, or buried cable transmission as needed. The exchange switching equipment is maintained at the Environmental & Energy Resource Center (EERC). As an independent system with an uninterruptible power supply, it may operate with or without local phone service or external power.

Centrex Phone System (ESSX)

The Centrex/Electronic Switch System Exchange 1 (Centrex/ESSX 1) is also a privately controlled exchange, which PSEG operates with its own microwave signal system. This system is also independent of local phone service, since each circuit is independently wired. The microwave signal is generated from corporate facilities in Newark, NJ, separated from any local effects of weather or telephone use. The exchange is accessible from other exchanges, but circuits are located only in PSEG facilities. It is considered the primary backup for the NETS system.

NRC (ENS)

The Emergency Notification System (ENS) is a dedicated communications system with the NRC, which is part of the Federal Telecommunications System (FTS) and consists of direct lines to the NRC. FTS lines are used to provide general accident information. These telephones are installed in the Control Room, TSC, and the EOF.

This EAL is the hot condition equivalent of the cold condition EAL CU5.1.

EAL Bases Reference(s):

1. NEI 99-01, Rev. 05, SU6 Example EAL #1, #2
2. PSEG Nuclear Emergency Plan, Section 7
3. UFSAR 9.5.2 Communications System

This page intentionally blank

EAL Category: S – System Malfunction

EAL Subcategory: 7 – Fuel Clad Degradation

Initiating Condition: Fuel clad degradation

Mode Applicability: 1 - Power Operations, 2 - Startup, 3 - Hot Standby, 4 - Hot Shutdown

EAL# & Classification Level: **SU7.1 – UNUSUAL EVENT**

EAL:

VALID Letdown Line Monitor readings indicating fuel clad degradation greater than **EITHER** of the following Technical Specification allowable limits:

- 1R31A in **warning**
- 2R31 in **alarm**

Basis:

This EAL is included because it is a precursor of more serious conditions and, as result, is considered to be a potential degradation of the level of safety of the plant.

Escalation of this EAL to the ALERT level is via the Fission Product Barriers.

~~EAL #1~~

This threshold addresses letdown~~site-specific~~ radiation monitor readings that provide indication of a degradation of fuel clad integrity.

~~[Such as BWR air ejector monitors, PWR failed fuel monitors, etc.]~~

~~[Site specific list for on-site communications loss must encompass the loss of all means of communications (e.g., commercial telephones, sound powered phone systems, page party system (Gaitronics) and radios / walkie talkies) routinely used for operations.]~~

~~[Site specific list for off-site communications loss must encompass the loss of all means of communications with off-site authorities. This should include the ENS, commercial telephone lines, telecopy transmissions, and dedicated phone systems that are routinely used for offsite emergency notifications.]~~

Explanation/Discussion/Definitions:

Letdown Line Monitors serve as a failed fuel detector by monitoring gamma levels in the reactor coolant letdown line. Unit 1 Letdown Line Monitor (1R31A) is a gross iodine monitor. The Unit 2 Letdown Line Monitor (2R31) is an ion chamber which measures letdown line activity. The Letdown Line Monitor "warning" setpoints are administratively set at 50% of the "alarm" setpoints.

- 1R31A "alarm" setpoint is based on 1% failed fuel. The "warning" setpoint represents about 0.5% failed fuel and has been selected because the setpoint would be readily identifiable on Control Room instrumentation.

- 2R31 "alarm" setpoint is based on 0.1% failed fuel. This setpoint is readily identifiable and also representative of typical values of coolant activity at Technical Specification limits.

Read-outs for these monitors can be obtained in the Control Room.

Other radiation monitors that may be used to confirm a valid Letdown Line Monitor alarm include:

- 1(2)R4 Charging Pump Room

- 1(2)R26 Reactor Coolant Filter

- Containment Area Rad Monitors (1(2)R2, 1(2)7, 1(2)10A, 1(2)10B)

Definitions:

> **VALID**: An indication, report, or condition, is considered to be **VALID** when it is verified by (1) an instrument channel check, (2) indications on related or redundant indicators, or (3) by direct observation by plant personnel, such that doubt related to the indicator's operability, the condition's existence, or the report's accuracy is removed. Implicit in this definition is the need for timely assessment.

EAL Bases Reference(s):

1. NEI 99-01, Rev. 05, SU4 Example EAL #1
2. PSBP 315733 Radiation Monitoring System Manual, Unit 1
3. PSBP 315734 Radiation Monitoring System Control Manual, Unit 2
4. UFSAR 9.3.5.3 Safety Evaluation (Failed fuel Detection System)
5. UFSAR 11.4 Radiological Monitoring
6. S1(S2).OP-AB.RC-0002 (Q) High Activity in the Reactor Coolant System

EAL Category: S – System Malfunction

EAL Subcategory: 7 – Fuel Clad Degradation

Initiating Condition: Fuel clad degradation

Mode Applicability: 1 - Power Operations, 2 - Startup, 3 - Hot Standby, 4 - Hot Shutdown

EAL# & Classification Level: **SU7.2 – UNUSUAL EVENT**

EAL:

Reactor coolant activity (Dose Equivalent Iodine) exceeds limits of Technical Specification Figure 3.4-1

Basis:

This EAL is included because it is a precursor of more serious conditions and, as result, is considered to be a potential degradation of the level of safety of the plant.

Escalation of this EAL to the ALERT level is via the Fission Product Barriers.

~~EAL #2~~

This threshold addresses coolant samples exceeding coolant technical specifications for transient iodine spiking limits (Technical Specification Figure 3.4-1).

~~[Such as BWR air ejector monitors, PWR failed fuel monitors, etc.]~~

~~[Site specific list for on-site communications loss must encompass the loss of all means of communications (e.g., commercial telephones, sound powered phone systems, page party system (Gaitronics) and radios / walkie talkies) routinely used for operations.]~~

~~[Site specific list for off-site communications loss must encompass the loss of all means of communications with off-site authorities. This should include the ENS, commercial telephone lines, telecopy transmissions, and dedicated phone systems that are routinely used for offsite emergency notifications.]~~

Explanation/Discussion/Definitions:

An Unusual Event is only warranted when actual fuel clad damage is the cause of the elevated coolant sample (as determined by RCS sample analysis confirmation).

Escalation to an ALERT or higher emergency classification occurs if a sample analysis of reactor coolant activity exceeds 300 µCi/gm DEI-131 via EAL FB4-L.

EAL Bases Reference(s):

1. NEI 99-01, Rev. 05, SU4Example EAL #2
2. SGS Technical Specification Section 3.4.8 - Unit 1 Specific Activity
3. SGS Technical Specification Section 3.4.9 - Unit 2 Specific Activity
4. S1(S2).OP-AB.RC-0002(Q) High Activity in Reactor Coolant System

This page intentionally blank

EAL Category: S – System Malfunction

EAL Subcategory: 8 – RCS Leakage

Initiating Condition: RCS Leakage

Mode Applicability: 1 - Power Operations, 2 - Startup, 3 - Hot Standby, 4 - Hot Shutdown

EAL# & Classification Level: **SU8.1 – UNUSUAL EVENT**

EAL:

UNIDENTIFIED LEAKAGE or **PRESSURE BOUNDARY LEAKAGE > 10 gpm** (Note 6)

OR

IDENTIFIED LEAKAGE > 25 gpm (Note 6)

Note 6: See the Fission Product Barrier Table for possible escalation above the UNUSUAL EVENT due to RCS Leakage

Basis:

This ~~IC~~ EAL is included as a ~~NO~~UE because it may be a precursor of more serious conditions and, as result, is considered to be a potential degradation of the level of safety of the plant. The **10 gpm** value for the **UNIDENTIFIED** or **PRESSURE BOUNDARY LEAKAGE** was selected as it is observable with normal C~~c~~ontrol R~~r~~oom indications. Lesser values must generally be determined through time-consuming surveillance tests (e.g., mass balances).

Relief valve normal operation should be excluded from this ~~IC~~EAL. However, a relief valve that operates and fails to close per design should be considered applicable to this ~~IC~~ EAL if the relief valve cannot be isolated.

The EAL for identified leakage is set at a higher value due to the lesser significance of **IDENTIFIED LEAKAGE** in comparison to **UNIDENTIFIED** or **PRESSURE BOUNDARY LEAKAGE**. In either case, escalation of this ~~IC~~ EAL to the ALERT level is via Fission Product Barrier Degradation ~~ICs~~EALs.

~~[Such as BWR air ejector monitors, PWR failed fuel monitors, etc.]~~

~~[Site specific list for on-site communications loss must encompass the loss of all means of communications (e.g., commercial telephones, sound powered phone systems, page party system (Gaitronics) and radios / walkie talkies) routinely used for operations.]~~

~~[*Site specific list for off-site communications loss must encompass the loss of all means of communications with off-site authorities. This should include the ENS, commercial telephone lines, telecopy transmissions, and dedicated phone systems that are routinely used for offsite emergency notifications.*]~~

Explanation/Discussion/Definitions:

RCS Leakage is defined as any leakage of Reactor Coolant this is unisolable or affects Pressurizer level. RCS Leakage of the magnitude described in this EAL is consistent with an Unusual Event classification and should be declared immediately.

The Technical Specification definitions for **UNIDENTIFIED LEAKAGE, IDENTIFIED LEAKAGE and PRESSURE BOUNDARY LEAKAGE** are provided below.

Relief valve normal operation (e.g., PZR PORV or safety valves) should be excluded from emergency classification under this EAL. A relief valve that fails to close per design and cannot be isolated from the Control Room, however, should be considered applicable to this EAL.

Utilizing the leak before break concept, it is anticipated that there will be indications of minor RCS boundary leakage prior to a fault escalating to a major leak or rupture. Detection of low levels of leakage while pressurized permits monitoring for catastrophic failure or rupture precursors.

The Control Room staff is equipped with the Plant Computer (PRIM SYS LEAK RATE program) and manual methods of determining the extent of RCS leakage.

<u>Examples of RCS leakage and applicability include:</u>

Example #1: A rapidly lowering Volume Control Tank (VCT) level is identified during a Radwaste evolution involving the draining of the #12 Mixed Bed Demineralizer (MBD). The Control Room staff identifies the condition and the drain valve on the MBD is closed. Charging flow has not changed and VCT level is stabilized within 3 minutes. The calculated leak rate is 73 gpm for 3 minutes.

> *This is not reportable because the leakage did not affect pressurizer level and the leak was isolable from the RCS. Note that Tech Spec limits still apply.*

Example #2: A Unit 2 RCS leakrate calculation identified a 30-gpm leak. VCT level has started to drop unexpectedly and enough time has passed that there are minor variations in pressurizer level. The source of the leak is unknown. After about 20 minutes, it was determined that the source of the leak was the stem leakoff line from the 2CV55.

> *This event should be classified within the 15 minute clock and declared an Unusual Event even though the leak could have been isolated. Any reduction in pressurizer level, which can be attributed to a Reactor Coolant System leak should be quantified and the Technical Specification entered and the applicable EAL entered as appropriate.*

The use of increasing charging flow to quantify Reactor Coolant System leakage is acceptable provided there is an actual Reactor Coolant System leak. This could result in a stable pressurizer level and should be reviewed against Technical Specifications and the ECG as applicable. If at any time the source of the leakage is unknown and it meets the ECG criteria, the Emergency Coordinator should classify the event.

Escalation to the ALERT emergency classification level is via EALs in Category F. Note 6 has been added to remind the EAL-user to review the Fission Product Barrier EALs for possible escalation to higher emergency classifications.

Definitions:

UNIDENTIFIED LEAKAGE: As defined in T/S, shall be all leakage which is not **IDENTIFIED LEAKAGE**.

PRESSURE BOUNDARY LEAKAGE: As defined in T/S, shall be leakage (except steam generator tube leakage) through a non-isolable fault in a Reactor Coolant System component body, pipe wall or vessel wall.

IDENTIFIED LEAKAGE: As defined in T/S, shall be leakage (except Reactor Coolant Pump Seal Water Injection) into closed systems, such as pump seal or valve packing leaks that are captured and conducted to a sump or collecting tank, or, shall be leakage into the containment atmosphere from sources that are both specifically located and known either not to interfere with the operation of the leakage detection systems or not to be **PRESSURE BOUNDARY LEAKAGE**, or, shall be Reactor coolant system leakage through a steam generator to the secondary system (primary-to-secondary leakage).

EAL Bases Reference(s):

1. NEI 99-01, Rev. 05, SU4 Example EAL #2
2. Technical Specifications, Definitions
3. Technical Specifications 3.4.6.2 - Unit 1 Operational Leakage
4. Technical Specifications 3.4.7.2 - Unit 2 Operational Leakage
5. UFSAR 5.2.7.2 Indication in Control Room
6. S1(S2).OP-AB.RC-0001(Q) Reactor Coolant System Leak
7. S1(S2).OP-SO.RC-0004(Q) Identifying and Measuring Leakage
8. SC.RA-AP.ZZ-0051 Leakage Monitoring and Reduction Program
9. S1(S2).OP-ST.RC-0008(Q) Reactor Coolant System Water Inventory Balance

This page intentionally blank

EALs for:

Fission Product Barriers

EAL Category: F – Fission Product Barrier Degradation

Subcategory: CFSTs

Initiating Condition: Potential Loss of Fuel Clad

Mode Applicability: 1 - Power Operations, 2 - Startup, 3 - Hot Standby, 4 - Hot Shutdown

EAL# & Point Value: **FB1-P (4 points)**

EAL:

CFST **Core Cooling** PURPLE path exists

Basis:

~~[*These thresholds are for PWRs using Critical Safety Function Status Tree (CSFST) monitoring and functional restoration procedures. For more information, please refer to Section 3.9 of this document.*]~~

~~Potential Loss Threshold A~~

Core Cooling ~~ORANGE~~ PURPLE indicates subcooling has been lost and that some clad damage may occur.

~~Potential Loss Threshold B~~

~~Heat Sink - RED when heat sink is required indicates the ultimate heat sink function is under extreme challenge.~~

Explanation/Discussion/Definitions:

CFST status will not be used for event classification until the Control Room staff has implemented the CFSTs. The Core Cooling CFST is illustrated in Attachment 2, page 4. Adverse Containment setpoints appear in the Heat Sink CFST. Adverse Containment conditions exist if Containment pressure exceeds 4 psig or R44 Containment radiation dose rates exceed 1E05 R/hr or R44 dose exceeds 1E06 R.

EAL Bases Reference(s):

1. NEI 99-01, Rev. 05, Table 5-F-3 Fuel Clad Potential Loss 1.A
2. 1(2)-EOP-CFST-1 Critical Safety Function Status Trees – F.02 Core Cooling Status Tree
3. NC.EP-EP.ZZ-0201 (Q) TSC - Integrated Engineering Response

This page intentionally blank

EAL Category: F – Fission Product Barrier Degradation

Subcategory: CFSTs

Initiating Condition: Potential Loss of Fuel Clad

Mode Applicability: 1 - Power Operations, 2 - Startup, 3 - Hot Standby, 4 - Hot Shutdown

EAL# & Point Value: **FB2-P (4 points)**

EAL:

CFST **Heat Sink** RED path exists due to actual loss of secondary heat sink and heat sink is required

Basis:

Heat Sink RED when heat sink is required indicates the ultimate heat sink function is under extreme challenge.

Explanation/Discussion/Definitions:

CFST **Heat Sink** RED Path entry conditions affects both the Fuel Clad and RCS Barriers. Therefore, minimum classification would be SAE.

A barrier loss classification should not be made if the **Heat Sink RED** Path is the result of procedurally required Auxiliary Feedwater Flow control.

CFST status will not be used for event classification until the Control Room staff has implemented the CFSTs. The Heat Sink CFST is illustrated in Attachment 2, page 6. Adverse Containment setpoints appear in the Heat Sink CFST. Adverse Containment conditions exist if Containment pressure exceeds 4 psig or R44 Containment radiation dose rates exceed 1E05 R/hr or R44 dose exceeds 1E06 R.

EAL Bases Reference(s):

1. NEI 99-01, Rev. 05, Table 5-F-3 Fuel Clad Potential Loss 1.B
2. 1(2)-EOP-CFST-1 Critical Safety Function Status Trees – F.03 Heat Sink Status Tree
3. 1(2)-EOP-FRHS-1 Response to Loss of Secondary Heat Sink
4. NC.EP-EP.ZZ-0201 (Q) TSC - Integrated Engineering Response

This page intentionally blank

EAL Category: F – Fission Product Barrier Degradation

Subcategory: Core Exit TCs

Initiating Condition: Potential Loss of Fuel Clad

Mode Applicability: 1 - Power Operations, 2 - Startup, 3 - Hot Standby, 4 - Hot Shutdown

EAL# & Point Value: **FB3-P (4 points)**

EAL:

5 or more **CETs > 700°F**

Basis:

~~[*Core Exit Thermocouple Readings are included in addition to the Critical Safety Functions to include conditions when the CSFs may not be in use (initiation after SI is blocked) or plants which do not have a CSF scheme.*]~~

~~Loss Threshold A~~

~~The site specific reading should correspond to significant superheating of the coolant.~~

~~[*This value typically corresponds to the temperature reading that indicates core cooling - RED in Fuel Clad Barrier loss threshold 1.A which is usually about 1200 degrees F.*]~~

~~Potential Loss Threshold A~~

The ~~site specific reading should correspond to~~five core exit thermocouple (CET) temperatures **> 700°F** indicates a loss of subcooling.

~~[*This value typically corresponds to the temperature reading that indicates core cooling - ORANGE in Fuel Clad Barrier potential loss threshold 1.A which is usually about 700 to 900 degrees F.*]~~

Explanation/Discussion/Definitions:

Core exit thermocouple (CET) readings greater than **700°F** signal a CFST Core Cooling PURPLE path condition. CET readings are used as a fission product barrier threshold in addition to the CFST thresholds to address events in which the CFSTs may not yet be in use.

EAL Bases Reference(s):

1. NEI 99-01, Rev. 05, Table 5-F-3 Fuel Clad Potential Loss 3.A

2. 1(2)-EOP-CFST-1 Critical Safety Function Status Trees – F.02 Core Cooling Status Tree

This page intentionally blank

EAL Category: F – Fission Product Barrier Degradation

Subcategory: Inventory

Initiating Condition: Potential Loss of Fuel Clad

Mode Applicability: 1 - Power Operations, 2 - Startup, 3 - Hot Standby, 4 - Hot Shutdown

EAL# & Point Value: **FB4-P (4 points)**

EAL:

RVLIS **< Table F-1** thresholds

Table F-1 RVLIS Thresholds		
RVLIS		**RCPs**
Full Range	39%	None
Dynamic Range	44%	4
	30%	3
	20%	2
	13%	1

Basis:

There is no Loss threshold associated with this item.

The ~~site~~ specific values for the Potential Loss thresholds corresponds to approximately the top of the active fuel.

~~[*For sites using CSFSTs, the Potential Loss* threshold *is defined by the Core Cooling - ORANGE path. The site-specific value in this* threshold *should be consistent with the CSFST value.*]~~

Explanation/Discussion/Definitions:

The specified RVLIS readings (Table F-1) and the associated number of running RCP pumps are used in the CFSTs to signal core uncovery and are, therefore, indication of inadequate

coolant inventory. If the RVLIS thresholds are exceeded, a core covered condition cannot be confirmed. According to the CFST Core Cooling PURPLE path, this water level indicates subcooling has been lost and that some fuel clad damage may occur. RVLIS readings are used as a fission product barrier threshold in addition to the CFST thresholds to address events in which the CFSTs may not yet be in use.

EAL Bases Reference(s):

1. NEI 99-01, Rev. 05, Table 5-F-3 Fuel Clad Potential Loss 4.A
2. 1(2)-EOP-CFST-1 Critical Safety Function Status Trees – F.02 Core Cooling Status Tree

EAL Category: F – Fission Product Barrier Degradation

Subcategory: EC Judgment

Initiating Condition: Potential Loss of Fuel Clad

Mode Applicability: 1 - Power Operations, 2 - Startup, 3 - Hot Standby, 4 - Hot Shutdown

EAL# & Point Value: **FB5-P (4 points)**

EAL:

ANY condition in the opinion of the Emergency Coordinator that indicates potential loss of the Fuel Clad barrier

Basis:

Thi~~sese~~ threshold~~s~~ addresses any other factors that are to be used by the ~~Emergency Director~~Emergency Coordinator in determining whether the Fuel Clad barrier is ~~lost or~~ potentially lost. In addition, the inability to monitor the barrier should also be incorporated in this threshold as a factor in ~~Emergency Director~~Emergency Coordinator judgment that the barrier may be considered ~~lost or~~ potentially lost.

Explanation/Discussion/Definitions:

The Emergency Coordinator judgment threshold addresses any other factors relevant to determining if the Fuel Clad barrier is potentially lost. Such a determination should include **IMMINENT** barrier degradation, barrier monitoring capability and dominant accident sequences.

- Barrier degradation exists if the degradation will likely occur within two hours based on a projection of current safety system performance.
- Barrier monitoring capability is decreased if there is a loss or lack of reliable indicators. This assessment should include instrumentation operability concerns, readings from portable instrumentation and consideration of offsite monitoring results.
- Dominant accident sequences lead to degradation of all fission product barriers and likely entry to the EOPs. The Emergency Coordinator should be mindful of the Loss of AC power (Station Blackout) and ATWT EALs to assure timely emergency classification declarations.

Definitions:

IMMINENT: Mitigation actions have been ineffective, additional actions are not expected to be successful, and trended information indicates that the event or condition will occur within approximately 2 hours (unless a different time is specified).

EAL Bases Reference(s):

1. NEI 99-01, Rev. 05, Table 5-F-3 Fuel Clad Potential Loss 8.A

EAL Category: F – Fission Product Barrier Degradation

Subcategory: CFSTs

Initiating Condition: Loss of Fuel Clad

Mode Applicability: 1 - Power Operations, 2 - Startup, 3 - Hot Standby, 4 - Hot Shutdown

EAL# & Point Value: **FB1-L (5 points)**

EAL:

CFST **Core Cooling** RED path exists

Basis:

~~[*These thresholds are for PWRs using Critical Safety Function Status Tree (CSFST) monitoring and functional restoration procedures. For more information, please refer to Section 3.9 of this document.*]~~

~~Loss Threshold A~~

Core Cooling– RED indicates significant superheating and core uncovery and is considered to indicate loss of the Fuel Clad Barrier.

Explanation/Discussion/Definitions:

CFST status will not be used for event classification until the Control Room Staff has implemented the CFSTs. The Core Cooling CFST is illustrated in Attachment 2, page 4.

EAL Bases Reference(s):

1. NEI 99-01, Rev. 05, Table 5-F-3 Fuel Clad Loss 1.A
2. 1(2)-EOP-CFST-1 Critical Safety Function Status Trees – F.02 Core Cooling Status Tree

This page intentionally blank

EAL Category: F – Fission Product Barrier Degradation

Subcategory: Core Exit TCs

Initiating Condition: Loss of Fuel Clad

Mode Applicability: 1 - Power Operations, 2 - Startup, 3 - Hot Standby, 4 - Hot Shutdown

EAL# & Point Value: **FB2-L (5 points)**

EAL:

5 or more CETs **> 1200°F**

Basis:

~~[*These thresholds are for PWRs using Critical Safety Function Status Tree (CSFST) monitoring and functional restoration procedures. For more information, please refer to Section 3.9 of this document.*]~~

~~Potential Loss Threshold A~~

~~[*Core Exit Thermocouple Readings are included in addition to the Critical Safety Functions to include conditions when the CSFs may not be in use (initiation after SI is blocked) or plants which do not have a CSF scheme.*]~~

~~Loss Threshold A~~

The five core exit thermocouple (CET) temperatures **> 1200°F** indicates ~~site specific reading should correspond to~~ significant superheating of the coolant.

~~[*This value typically corresponds to the temperature reading that indicates core cooling - RED in Fuel Clad Barrier loss threshold 1.A which is usually about 1200 degrees F.*]~~

Explanation/Discussion/Definitions:

Core exit thermocouple (CET) readings greater than **1,200°F** signal a CFST Core Cooling RED path condition. CET readings are used as a fission product barrier threshold in addition to the CFST thresholds to address events in which the CFSTs may not yet be in use.

EAL Bases Reference(s):

1. NEI 99-01, Rev. 05, Table 5-F-3 Fuel Clad Loss 3.A
2. 1(2)-EOP-CFST-1 Critical Safety Function Status Trees – F.02 Core Cooling Status Tree

This page intentionally blank

EAL Category: F – Fission Product Barrier Degradation

Subcategory: Radiation

Initiating Condition: Loss of Fuel Clad

Mode Applicability: 1 - Power Operations, 2 - Startup, 3 - Hot Standby, 4 - Hot Shutdown

EAL# & Point Value: **FB3-L (5 points)**

EAL:

Containment radiation monitor R44A or R44B reading **> 300 R/hr**

Basis:

The site specific reading is a value which indicates the release of reactor coolant, with elevated activity indicative of fuel damage, into the containment.

~~[*The reading should be calculated assuming the instantaneous release and dispersal of the reactor coolant noble gas and iodine inventory associated with a concentration of 300 µCi/gm dose equivalent I-131 into the containment atmosphere.*]~~

Reactor coolant concentrations of this magnitude are several times larger than the maximum concentrations (including iodine spiking) allowed within technical specifications and are therefore indicative of fuel damage.

This value is higher than that specified for RCS barrier Loss ~~threshold #6~~RB1-L. Thus, this threshold indicates a loss of both the Fuel Clad barrier and RCS barrier that appropriately escalates the emergency classification level to a Site Area Emergency.

~~[***Caution:*** *it is important to recognize that in the event the radiation monitor is sensitive to shine from the reactor vessel or piping, spurious readings will be present and another indicator of fuel clad damage is necessary or compensated for in the threshold value.*]~~

There is no Potential Loss threshold associated with this item.

Explanation/Discussion/Definitions:

1(2)R44A and 1(2)R44B are the Containment High Range area radiation monitors. The threshold value of **300 R/hr** has been calculated assuming the instantaneous release and dispersal of the reactor coolant noble gas and iodine inventory associated with a concentration of 300 µCi/gm Dose Equivalent I-131 into the Containment atmosphere. 300 µCi/gm Dose Equivalent Iodine-131 (DEI-131) corresponds to approximately 2.8% fuel clad damage.

EAL Bases Reference(s):

1. NEI 99-01, Rev. 05, Table 5-F-3 Fuel Clad Loss 6.A
2. Calculation by Nuclear Fuels Group file title DS1.6-0098 "Verification of Emergency Action Levels for Event Classification" date 02/10/95

This page intentionally blank

EAL Category: F – Fission Product Barrier Degradation

Subcategory: Other

Initiating Condition: Loss of Fuel Clad

Mode Applicability: 1 - Power Operations, 2 - Startup, 3 - Hot Standby, 4 - Hot Shutdown

EAL# & Point Value: **FB4-L (5 points)**

EAL:

Coolant activity **> 300 µCi/gm** dose equivalent I-131

Basis:

The site specific value ~~corresponds~~ is ~~to~~ **300 µCi/gm dose equivalent I-131** ~~equivalent~~. Assessment by the NEI EAL Task Force indicates that this amount of coolant activity is well above that expected for iodine spikes ~~and corresponds to less than 5% fuel clad damage~~. This amount of radioactivity indicates significant clad damage and thus the Fuel Clad Barrier is considered lost.

~~*[The value can be expressed either in mR/hr observed on the sample or as µCi/gm results from analysis.]*~~

There is no Potential Loss threshold associated with this item.

Explanation/Discussion/Definitions:

The threshold value of **300 µCi/gm Dose Equivalent Iodine-131** (DEI-131) is based upon an engineering calculation and corresponds to approximately 2.8% fuel clad damage.

EAL Bases Reference(s):

1. NEI 99-01, Rev. 05, Table 5-F-3 Fuel Clad Loss 2.A
2. Calculation by Nuclear Fuels Group file title DS1.6-0098 "Verification of Emergency Action Levels for Event Classification" date 2/10/95
3. S1(S2).OP-AB.RC-0002 (Q) High Activity in Reactor Coolant System

This page intentionally blank

EAL Category: F – Fission Product Barrier Degradation

Subcategory: EC Judgment

Initiating Condition: Loss of Fuel Clad

Mode Applicability: 1 - Power Operations, 2 - Startup, 3 - Hot Standby, 4 - Hot Shutdown

EAL# & Point Value: **FB5-L (5 points)**

EAL:

ANY condition in the opinion of the Emergency Coordinator that indicates loss of the Fuel Clad barrier

Basis:

~~These~~ This thresholds addresses any other factors that are to be used by the ~~Emergency Director~~Emergency Coordinator in determining whether the Fuel Clad barrier is lost ~~or potentially lost~~. In addition, the inability to monitor the barrier should also be incorporated in this threshold as a factor in ~~Emergency Director~~Emergency Coordinator judgment that the barrier may be considered lost ~~or potentially lost~~.

Explanation/Discussion/Definitions:

The Emergency Coordinator judgment threshold addresses any other factors relevant to determining if the Fuel Clad barrier is lost. Such a determination should include **IMMINENT** barrier degradation, barrier monitoring capability and dominant accident sequences.

- Barrier degradation exists if the degradation will likely occur within two hours based on a projection of current safety system performance.
- Barrier monitoring capability is decreased if there is a loss or lack of reliable indicators. This assessment should include instrumentation operability concerns, readings from portable instrumentation and consideration of offsite monitoring results.
- Dominant accident sequences lead to degradation of all fission product barriers and likely entry to the EOPs. The Emergency Coordinator should be mindful of the Loss of AC power (Station Blackout) and ATWT EALs to assure timely emergency classification declarations.

Definitions:

IMMINENT: Mitigation actions have been ineffective, additional actions are not expected to be successful, and trended information indicates that the event or condition will occur within approximately 2 hours (unless a different time is specified).

EAL Bases Reference(s):

1. NEI 99-01, Rev. 05, Table 5-F-3 Fuel Clad Loss 8.A

EAL Category: F – Fission Product Barrier Degradation

Subcategory: Isolation

Initiating Condition: Potential Loss of RCS

Mode Applicability: 1 - Power Operations, 2 - Startup, 3 - Hot Standby, 4 - Hot Shutdown

EAL# & Point Value: **RB1-P (4 points)**

EAL:

CFST **Thermal Shock** RED path exists

Basis:

~~[*These thresholds are for PWRs using Critical Safety Function Status Tree (CSFST) monitoring and functional restoration procedures. For more information, refer to Section 3.9 of this report.*]~~

~~Potential Loss Threshold A~~

RCS ~~Integrity~~ **Thermal Shock** ~~-~~ RED indicates an extreme challenge to the safety function derived from appropriate instrument readings.

~~Potential Loss Threshold B~~

~~Heat Sink - RED when heat sink is required indicates the ultimate heat sink function is under extreme challenge.~~

There is no Loss threshold associated with this item.

Explanation/Discussion/Definitions:

CFST status will not be used for event classification until the Control Room staff has implemented the CFSTs. The Thermal Shock CFST is illustrated in Attachment 2, pages 7 and 8. The Heat Sink CFST is illustrated in Attachment 2, page 6. Adverse Containment setpoints appear in the Heat Sink CFST. Adverse Containment conditions exist if Containment pressure exceeds 4 psig or R44 Containment radiation dose rates exceed 1E05 R/hr or R44 dose exceeds 1E06 R.

EAL Bases Reference(s):

1. NEI 99-01, Rev. 05, Table 5-F-3 RCS Barrier Potential Loss 1.A

2. 1(2)-EOP-CFST-1 Critical Safety Function Status Trees – F.04 Thermal Shock Status Tree
3. NC.EP-EP.ZZ-0201 (Q) TSC - Integrated Engineering Response

This page intentionally blank

EAL Category: F – Fission Product Barrier Degradation

Subcategory: Isolation

Initiating Condition: Potential Loss of RCS

Mode Applicability: 1 - Power Operations, 2 - Startup, 3 - Hot Standby, 4 - Hot Shutdown

EAL# & Point Value: **RB2-P (4 points)**

EAL:

CFST **Heat Sink** RED path exists due to actual loss of secondary heat sink and heat sink is required

Basis:

Heat Sink RED when heat sink is required indicates the ultimate heat sink function is under extreme challenge.

There is no Loss threshold associated with this item.

Explanation/Discussion/Definitions:

CFST **Heat Sink** RED Path entry conditions affects both the Fuel Clad and RCS Barriers. Therefore, minimum classification would be SAE.

A barrier loss classification should not be made if the **Heat Sink** RED Path is the result of procedurally required Auxiliary Feedwater Flow control.

CFST status will not be used for event classification until the Control Room staff has implemented the CFSTs. The Thermal Shock CFST is illustrated in Attachment 2, pages 7 and 8. The Heat Sink CFST is illustrated in Attachment 2, page 6. Adverse Containment setpoints appear in the Heat Sink CFST. Adverse Containment conditions exist if Containment pressure exceeds 4 psig or R44 Containment radiation dose rates exceed 1E05 R/hr or R44 dose exceeds 1E06 R.

EAL Bases Reference(s):

1. NEI 99-01, Rev. 05, Table 5-F-3 RCS Barrier Potential Loss 1.B
2. 1(2)-EOP-CFST-1 Critical Safety Function Status Trees – F.03 Heat Sink Status Tree
3. 1(2)-EOP-FRHS-1 Response to Loss of Secondary Heat Sink
4. NC.EP-EP.ZZ-0201 (Q) TSC - Integrated Engineering Response

EAL Category: F – Fission Product Barrier Degradation

Subcategory: Inventory

Initiating Condition: Potential Loss of RCS

Mode Applicability: 1 - Power Operations, 2 - Startup, 3 - Hot Standby, 4 - Hot Shutdown

EAL# & Point Value: **RB3-P (4 points)**

EAL:

One Centrifugal Charging Pump CANNOT maintain PZR level **> 17%** as a result of RCS leakage

Basis:

~~Potential Loss Threshold A~~

This threshold is based on the apparent inability to maintain normal liquid inventory within the Reactor Coolant System (RCS) by normal operation of the Chemical and Volume Control System which is considered to be the flow rate equivalent to one charging pump discharging to the charging header. Minimizing ~~Isolating~~ letdown is a standard abnormal operating procedure action and may prevent unnecessary classifications when a non-RCS leakage path such as a CVCS leak exists. The intent of this condition is met if the leak is in Letdown and attempts to isolate Letdown are NOT successful. Additional charging pumps being required is indicative of a substantial RCS leak.

~~[*For plants with low capacity charging pumps, a 50 gpm indicated leak rate value may be used to indicate the Potential Loss.*]~~

Explanation/Discussion/Definitions:

Significant leakage from the RCS requires implementation of S1 (S2).OP-AB.RC-0001(Q). Actions required by this procedure specify the use of one Centrifugal Charging Pump, discharging to the charging header, and Letdown reduced to a minimum. If RCS leakage results in an inability to maintain the specified Pressurizer (PZR) level with a normal charging lineup and minimum Letdown flow using one Centrifugal Charging Pump, an RCS inventory loss is occurring that would require initiation of Reactor Trip and Safety Injection (SI) and entry into EOP-TRIP-1. This RCS Potential Loss assumes that any event that would result in significant RCS mass loss will require at least an Alert emergency classification.

Non-RCS leakage events (such as steam or feedwater system breaks) in which no mass is lost from the RCS should not be classified under this RCS barrier Loss. SGTRs that result in entry into 1(2)-EOP-SGTR-1 shall be classified under RCS Barrier Loss RB3-L. If a SGTR does not result in 1(2)-EOP-SGTR-1 entry, it should be classified as a minimum under this RCS barrier Potential Loss if PZR level cannot be maintained above **17%**.

When PZR level drops to **17%**, Letdown isolates and pressurizer heaters deenergize. This condition is signaled by overhead annunciator E-36, PZR HTR OFF LVL LO. Pressurizer level is indicated on LI-459A, LI-460A, LI-461, associated computer points and SPDS.

The design flowrate of one centrifugal charging pump is 150 gpm.

EAL Bases Reference(s):

1. NEI 99-01, Rev. 05, Table 5-F-3 RCS Barrier Potential Loss 2.A
2. S1(S2).OP-AB.RC-0001(Q) Reactor Coolant System Leak
3. 1(2)-EOP-TRIP-1 Reactor Trip or Safety Injection
4. 1(2)-EOP-SGTR-1 Steam Generator Tube Rupture
5. S1(S2).OP-AR.ZZ-0005(Q) OHA E-36, PZR HTR OFF LVL LO
6. S1(S2).OP-SO.CVC-0002(Q) Charging Pump Operation

EAL Category: F – Fission Product Barrier Degradation

Subcategory: EC Judgment

Initiating Condition: Potential Loss of RCS

Mode Applicability: 1 - Power Operations, 2 - Startup, 3 - Hot Standby, 4 - Hot Shutdown

EAL# & Point Value: **RB4-P (4 points)**

EAL:

ANY condition in the opinion of the Emergency Coordinator that indicates potential loss of the RCS barrier

Basis:

Thi~~sese~~ threshold~~s~~ addresses any other factors that are to be used by the Emergency Coordinator in determining whether the RCS barrier is ~~lost or~~ potentially lost. In addition, the inability to monitor the barrier should also be incorporated in this threshold as a factor in ~~Emergency Director~~Emergency Coordinator judgment that the barrier may be considered ~~lost or~~ potentially lost.

Explanation/Discussion/Definitions:

The Emergency Coordinator judgment threshold addresses any other factors relevant to determining if the RCS barrier is potentially lost. Such a determination should include **IMMINENT** barrier degradation, barrier monitoring capability and dominant accident sequences.

- Barrier degradation exists if the degradation will likely occur within two hours based on a projection of current safety system performance.
- Barrier monitoring capability is decreased if there is a loss or lack of reliable indicators. This assessment should include instrumentation operability concerns, readings from portable instrumentation and consideration of offsite monitoring results.
- Dominant accident sequences lead to degradation of all fission product barriers and likely entry to the EOPs. The Emergency Coordinator should be mindful of the Loss of AC power (Station Blackout) and ATWT EALs to assure timely emergency classification declarations.

Definitions:

IMMINENT: Mitigation actions have been ineffective, additional actions are not expected to be successful, and trended information indicates that the event or condition will occur within approximately 2 hours (unless a different time is specified).

EAL Bases Reference(s):

1. NEI 99-01, Rev. 05, Table 5-F-3 RCS Potential Loss 8.A

EAL Category: F – Fission Product Barrier Degradation

Subcategory: Radiation

Initiating Condition: Loss of RCS

Mode Applicability: 1 - Power Operations, 2 - Startup, 3 - Hot Standby, 4 - Hot Shutdown

EAL# & Point Value: **RB1-L (5 points)**

EAL:

ANY of the following Containment radiation monitor readings:

- 1(2)R2 **> 1000 mR/hr**
- 1(2)R44A **> 10 R/hr**
- 1(2)R44B **> 10 R/hr**

Basis:

The ~~site specific~~ reading ~~is~~s are ~~a~~ values which indicates the release of reactor coolant to the containment.

~~[*The reading should be calculated assuming the instantaneous release and dispersal of the reactor coolant noble gas and iodine inventory associated with normal operating concentrations (i.e., within T/S) into the containment atmosphere.*]~~

The~~is~~ readings will be less than that specified for Fuel Clad barrier threshold ~~6~~FB3-L. Thus, this threshold would be indicative of a RCS leak only. If the radiation monitor reading increased to that specified by Fuel Clad barrier threshold, fuel damage would also be indicated.

~~[*However, if the site specific physical location of the containment radiation monitor is such that radiation from a cloud of released RCS gases could not be distinguished from radiation from adjacent piping and components containing elevated reactor coolant activity, this threshold should be omitted and other site specific indications of RCS leakage substituted.*]~~

There is no Potential Loss threshold associated with this item.

Explanation/Discussion/Definitions:

130' Containment Area Rad Monitor 1(2)R2 has an instrument scale range of 0.1 mR/hr to 10 R/hr and, therefore, offers the preferred method of assessing this RCS Barrier Loss. 1 R/hr on this monitor is indicative of the instantaneous release and dispersal of the reactor coolant noble gas and iodine inventory associated with Technical Specification concentrations into the Containment atmosphere.

These readings are less than that specified for Fuel Clad Barrier Loss FB3-L since this EAL attempts to identify RCS leakage assuming RCS activity is at the Technical Specification limit.

Classification under this EAL should not be made based upon crud burst evolutions or other non-RCS leakage events.

EAL Bases Reference(s):

1. NEI 99-01, Rev. 05, Table 5-F-3 RCS Barrier Loss 6.A
2. Calculation by Nuclear Fuels Group file title DS1.6-0098 "Verification of Emergency Action Levels for Event Classification" date 2/10/95

EAL Category: F – Fission Product Barrier Degradation

Subcategory: Inventory

Initiating Condition: Loss of RCS

Mode Applicability: 1 - Power Operations, 2 - Startup, 3 - Hot Standby, 4 - Hot Shutdown

EAL# & Point Value: **RB2-L (5 points)**

EAL:

Subcooling ≤ **0°F** (as a result of RCS leakage)

Basis:

~~Loss Threshold A~~

This threshold addresses conditions where leakage from the RCS is greater than available inventory control capacity such that a loss of subcooling has occurred. The loss of subcooling is the fundamental indication that the inventory control systems are inadequate in maintaining RCS pressure and inventory against the mass loss through the leak.

Explanation/Discussion/Definitions:

RCS subcooling of **0°F** or less is a criterion in the CFST Core Cooling YELLOW path (or higher) and is monitored in the Continuous Action Summary (CAS). Subcooling is indicated in the Control Room on Subcooling Margin Monitor Channel A and Channel B. This threshold focuses on RCS inventory loss due to LOCA conditions. Non-RCS leakage events (such as steam or feedwater system breaks) in which no mass is lost from the RCS should not be classified under this RCS barrier Loss. Subcooling equal to or less than **0°F** is indication that leakage from the RCS barrier is greater than the available inventory control capacity.

This threshold does not apply to primary-to-secondary leakage events since adequate injection capability should be available for the spectrum of such events including Steam Generator Tube Rupture (SGTR). Refer to RCS barrier Loss RB3-L for SGTR.

EOP directed actions resulting in deliberate subcooling reduction (e.g. during SGTR saturated recovery), steam/feedwater line breaks, or momentary reductions below **0°F** that are recoverable (e.g. SI flow reduction sequence) should not be classified under this EAL.

EAL Bases Reference(s):

1. NEI 99-01, Rev. 05, Table 5-F-3 RCS Barrier Loss 2.A

2. 1(2)-EOP-CFST-1 Critical Safety Function Status Trees - F.02 Core Cooling Status Tree

This page intentionally blank

EAL Category: F – Fission Product Barrier Degradation

Subcategory: Inventory

Initiating Condition: Loss of RCS

Mode Applicability: 1 - Power Operations, 2 - Startup, 3 - Hot Standby, 4 - Hot Shutdown

EAL# & Point Value: **RB3-L (5 points)**

EAL:

SGTR requiring ECCS (SI) Actuation

Basis:

This threshold addresses the full spectrum of Steam Generator (SG) tube rupture events in conjunction with Containment barrier Loss thresholds. It addresses RUPTURED SG(s) for which the leakage is large enough to cause actuation of ECCS (SI). This is consistent to the RCS leak rate barrier Potential Loss threshold.

~~[*For plants that have implemented Westinghouse Owners Group emergency response guides, this condition is described by "entry into E-3 required by EOPs".*]~~

By itself, this threshold will result in the declaration of an Alert. However, if the SG is also FAULTED (i.e., two barriers failed), the declaration escalates to a Site Area Emergency per Containment barrier Loss thresholds.

There is no Potential Loss threshold associated with this item.

Explanation/Discussion/Definitions:

This EAL is indicative of a loss of RCS inventory due to a Steam Generator Tube Rupture (SGTR) in which the leakage is large enough to cause actuation of Safety Injection (SI).

EAL Bases Reference(s):

1. NEI 99-01, Rev. 05, Table 5-F-3 RCS Barrier Loss 4.A
2. 1(2)-EOP-SGTR-1 Steam Generator Tube Rupture
3. 1(2)-EOP-TRIP-1 Reactor Trip or Safety Injection

This page intentionally blank

EAL Category: F – Fission Product Barrier Degradation

Subcategory: EC Judgment

Initiating Condition: Loss of RCS

Mode Applicability: 1 - Power Operations, 2 - Startup, 3 - Hot Standby, 4 - Hot Shutdown

EAL# & Point Value: **RB4-L (5 points)**

EAL:

ANY condition in the opinion of the Emergency Coordinator that indicates loss of the RCS barrier

Basis:

Thi~~ese~~ threshold~~s~~ addresses any other factors that are to be used by the ~~Emergency Director~~Emergency Coordinator in determining whether the RCS barrier is lost~~ or potentially lost~~. In addition, the inability to monitor the barrier should also be incorporated in this threshold as a factor in ~~Emergency Director~~Emergency Coordinator judgment that the barrier may be considered lost~~ or potentially lost~~.

Explanation/Discussion/Definitions:

The Emergency Coordinator judgment threshold addresses any other factors relevant to determining if the RCS barrier is lost. Such a determination should include **IMMINENT** barrier degradation, barrier monitoring capability and dominant accident sequences.

- Barrier degradation exists if the degradation will likely occur within two hours based on a projection of current safety system performance.
- Barrier monitoring capability is decreased if there is a loss or lack of reliable indicators. This assessment should include instrumentation operability concerns, readings from portable instrumentation and consideration of offsite monitoring results.
- Dominant accident sequences lead to degradation of all fission product barriers and likely entry to the EOPs. The Emergency Coordinator should be mindful of the Loss of AC power (Station Blackout) and ATWT EALs to assure timely emergency classification declarations.

Definitions:

IMMINENT: Mitigation actions have been ineffective, additional actions are not expected to be successful, and trended information indicates that the event or condition will occur within approximately 2 hours (unless a different time is specified).

EAL Bases Reference(s):

1. NEI 99-01, Rev. 05, Table 5-F-3 RCS Loss 8.A

EAL Category: F – Fission Product Barrier Degradation

Subcategory: CFSTs

Initiating Condition: Potential Loss of Containment

Mode Applicability: 1 - Power Operations, 2 - Startup, 3 - Hot Standby, 4 - Hot Shutdown

EAL# & Point Value: **CB1-P (2 points)**

EAL:

CFST **Containment** RED path exists

Basis:

~~*[These thresholds are for PWRs using Critical Safety Function Status Tree (CSFST) monitoring and functional restoration procedures. For more information, refer to Section 3.9 of this report.]*~~

RED path indicates an extreme challenge to the safety function derived from appropriate instrument readings and/or sampling results, and thus represents a potential loss of containment.

Conditions leading to a **C~~c~~ontainment** RED path result from RCS barrier and/or Fuel Clad Barrier Loss. Thus, this threshold is primarily a discriminator between Site Area Emergency and General Emergency representing a potential loss of the third barrier.

There is no Loss threshold associated with this item.

Explanation/Discussion/Definitions:

Critical Safety Function Status Tree (CFST) **Containment** RED path exists if Containment pressure is greater than or equal to 47 psig. The **Containment** RED path is in the Containment Environment CFST illustrated in Attachment 2, page 9.

Containment pressure of this magnitude results from RCS barrier loss or a faulted S/G inside Containment and signifies an extreme challenge to the Containment. For this condition, all Containment isolations, as well as automatic Containment Spray and CFCU "low speed" operation should be initiated before this threshold is reached.

The Containment barrier is considered potentially lost at 47 psig even though the Containment yield strength is much higher that 47 psig. Thus, this threshold is primarily a discriminator

between a Site Area Emergency and a General Emergency (i.e., a potential loss of the third barrier).

CFST status will not be used for event classification until the Control Room staff has implemented the CFSTs.

EAL Bases Reference(s):

1. NEI 99-01, Rev. 05, Table 5-F-3 Containment Potential Loss 1.A
2. 1(2)-EOP-CFST-1 Critical Safety Function Status Trees - F.05 Containment Environment Status Tree
3. UFSAR 6.2 Containment Systems
4. 1(2)-EOP-TRIP-1 Reactor Trip or Safety Injection

EAL Category: F – Fission Product Barrier Degradation

Subcategory: CFSTs

Initiating Condition: Potential Loss of Containment

Mode Applicability: 1 - Power Operations, 2 - Startup, 3 - Hot Standby, 4 - Hot Shutdown

EAL# & Point Value: **CB2-P (2 points)**

EAL:

CFST **Core Cooling** RED path exists

AND

Restoration procedure 1(2)EOP-FRCC-1 NOT effective within **15 minutes**

Basis:

See discussion below.[~~*This EAL should cover other (site-specific) indications that may unambiguously indicate loss or potential loss of the containment barrier, including indications from area or ventilation monitors in containment annulus or other contiguous buildings. If site emergency operating procedures provide for venting of the containment during an emergency as a means of preventing catastrophic failure, a Loss EAL should be included for the containment barrier. This EAL should be declared as soon as such venting is IMMINENT. Containment venting as part of recovery actions is classified in accordance with the radiological effluent ICs.*~~]

Explanation/Discussion/Definitions:

CFST status will not be used for event classification until the Control Room Staff has implemented the CFSTs. The Core Cooling CFST is illustrated in Attachment 2, page 4.

This threshold is redundant to Containment Barrier Potential Losses CB3-P and CB-4P.

EAL Bases Reference(s):

1. NEI 99-01, Rev. 05, Table 5-F-3 Containment Potential Loss 1.A
2. 1(2)-EOP-CFST-1 Critical Safety Function Status Tree - F.02 Core Cooling Status Tree
3. UFSAR 6.2 Containment Systems
4. 1(2)-EOP-TRIP-1 Reactor Trip or Safety Injection

This page intentionally blank

EAL Category: F – Fission Product Barrier Degradation

Subcategory: Core Exit TCs

Initiating Condition: Potential Loss of Containment

Mode Applicability: 1 - Power Operations, 2 - Startup, 3 - Hot Standby, 4 - Hot Shutdown

EAL# & Point Value: **CB3-P (2 points)**

EAL:

5 or more CETs **> 1200°F**

AND

Restoration procedure 1(2)EOP-FRCC-1 NOT effective within **15 minutes**

Basis:

There is no Loss threshold associated with this item.

The conditions in these thresholds represent an **IMMINENT** core melt sequence which, if not corrected, could lead to vessel failure and an increased potential for containment failure. In conjunction with the Core Cooling and RCS Leakage criteria in the Fuel and RCS barrier columns, this threshold would result in the declaration of a General Emergency -- loss of two barriers and the potential loss of a third. If the function restoration procedures are ineffective, there is no "success" path.

The function restoration procedures are those emergency operating procedures that address the recovery of the core cooling critical safety functions. The procedure is considered effective if the temperature is decreasing or if the vessel water level is increasing.

~~[*For units using the CSF status trees, a direct correlation to those status trees can be made if the effectiveness of the restoration procedures is also evaluated as stated below.*]~~

~~[*Severe accident analyses (e.g., NUREG-1150) have concluded that function restoration procedures can arrest core degradation within the reactor vessel in a significant fraction of the core damage scenarios, and that the likelihood of containment failure is very small in these events. Given this, it is appropriate to provide a reasonable period to allow function restoration procedures to arrest the core melt sequence.*]~~

Whether or not the procedures will be effective should be apparent within **15 minutes**. The Emergency ~~Director~~ Coordinator should make the declaration as soon as it is determined that the procedures have been, or will be ineffective.

~~Potential Loss Threshold B~~

~~[*The reactor vessel level chosen should be consistent with the emergency response guides applicable to the facility.*]~~

Explanation/Discussion/Definitions:

If core exit thermocouple (CET) readings are greater than **1,200°F**, Fuel Clad barrier is lost. CETs provide an indirect indication of fuel clad temperature by measuring the temperature of the reactor coolant that leaves the core region. Although clad rupture due to high temperature is not expected for CET readings less than the threshold, temperatures of this magnitude signal significant superheating of the reactor coolant and core uncovery. Events that result in CET readings above the loss threshold are severe accidents and are a severe accident management "Badly Damaged (BD)" condition. The BD descriptor signifies possible core overheating to the point that clad ballooning/collapse may occur and portions of the core may have melted.

Severe accident analysis has concluded that functional restoration procedures can arrest core degradation within the Reactor Vessel in a significant fraction of the scenarios, and that the likelihood of Containment failure in these scenarios is small. It is appropriate; therefore, to allow a reasonable period of time for the functional restoration procedures to arrest the core melt sequence. The functional restoration procedure, 1(2)-EOP-FRCC-1, is the emergency operating procedures that address the recovery an inadequate core cooling condition.

Definitions:

> **IMMINENT**: Mitigation actions have been ineffective, additional actions are not expected to be successful, and trended information indicates that the event or condition will occur within approximately 2 hours (unless a different time is specified).

EAL Bases Reference(s):

1. NEI 99-01, Rev. 05, Table 5-F-3 Containment Potential Loss 3.A
2. 1(2)-EOP-CFST-1 Critical Safety Function Status Trees – F.02 Core Cooling Status Tree
3. 1(2)-EOP-FRCC-1 Response to Inadequate Core Cooling

EAL Category: F – Fission Product Barrier Degradation

Subcategory: Core Exit TCs

Initiating Condition: Potential Loss of Containment

Mode Applicability: 1 - Power Operations, 2 - Startup, 3 - Hot Standby, 4 - Hot Shutdown

EAL# & Point Value: **CB4-P (2 points)**

EAL:

ALL of the following:

- 5 or more CETs **> 700°F**
- RVLIS **< Table F-1** thresholds
- Restoration procedure 1(2)EOP-FRCC-1 NOT effective within **15 minutes**

Table F-1 RVLIS Thresholds		
RVLIS		**RCPs**
Full Range	39%	None
Dynamic Range	44%	4
	30%	3
	20%	2
	13%	1

Basis:

There is no Loss threshold associated with this item.

The conditions in these thresholds represent an **IMMINENT** core melt sequence which, if not corrected, could lead to vessel failure and an increased potential for containment failure. In conjunction with the Core Cooling and RCS Leakage criteria in the Fuel and RCS ~~barrier~~ Barrier columns, this threshold would result in the declaration of a General Emergency -- loss

of two barriers and the potential loss of a third. If the function restoration procedures are ineffective, there is no "success" path.

The function restoration procedures are those emergency operating procedures that address the recovery of the core cooling critical safety functions. The procedure is considered effective if the temperature is decreasing or if the vessel water level is increasing.

~~[*For units using the CSF status trees, a direct correlation to those status trees can be made if the effectiveness of the restoration procedures is also evaluated as stated below.*]~~

~~[*Severe accident analyses (e.g., NUREG-1150) have concluded that function restoration procedures can arrest core degradation within the reactor vessel in a significant fraction of the core damage scenarios, and that the likelihood of containment failure is very small in these events. Given this, it is appropriate to provide a reasonable period to allow function restoration procedures to arrest the core melt sequence.*]~~

Whether or not the procedures will be effective should be apparent within **15 minutes**. The Emergency ~~Director~~ Coordinator should make the declaration as soon as it is determined that the procedures have been, or will be ineffective.

~~Potential Loss Threshold B~~

~~[*The reactor vessel level chosen should be consistent with the emergency response guides applicable to the facility.*]~~

Explanation/Discussion/Definitions:

This threshold indicates subcooling has been lost (CET readings **> 700°F**), the core is uncovered and some fuel clad damage may be occurring.

The **Table F-1** RVLIS thresholds are used in the CFSTs to signal core uncovery and are, therefore, indication of loss of coolant inventory. If the RVLIS thresholds are exceeded, a core covered condition cannot be confirmed.

Severe accident analysis has concluded that functional restoration procedures can arrest core degradation within the Reactor Vessel in a significant fraction of the scenarios, and that the likelihood of Containment failure in these scenarios is small. It is appropriate; therefore, to allow a reasonable period of time for the functional restoration procedures to arrest the core melt sequence. The functional restoration procedure, 1(2)-EOP-FRCC-1, is the emergency operating procedures that address the recovery an inadequate core cooling condition

Definitions:

IMMINENT: Mitigation actions have been ineffective, additional actions are not expected to be successful, and trended information indicates that the event or condition will occur within approximately 2 hours (unless a different time is specified).

EAL Bases Reference(s):

1. NEI 99-01, Rev. 05, Table 5-F-3 Containment Potential Loss 3.B
2. 1(2)-EOP-CFST-1 Critical Safety Function Status Trees – F.02 Core Cooling Status Tree
3. 1(2)-EOP-FRCC-1 Response to Inadequate Core Cooling

EAL Category: F – Fission Product Barrier Degradation

Subcategory: Radiation

Initiating Condition: Potential Loss of Containment

Mode Applicability: 1 - Power Operations, 2 - Startup, 3 - Hot Standby, 4 - Hot Shutdown

EAL# & Point Value: **CB5-P (2 points)**

EAL:

Containment radiation monitor 1(2)R44A or 1(2)R44B reading **> 2000 R/hr**

Basis:

There is no Loss threshold associated with this item.

The ~~site-specific~~ reading is a value which indicates significant fuel damage well in excess of the thresholds associated with both loss of Fuel Clad and loss of RCS ~~barriers~~Barriers. As stated in NEI 99-01 Section 3.8, a major release of radioactivity requiring off-site protective actions from core damage is not possible unless a major failure of fuel cladding allows radioactive material to be released from the core into the reactor coolant.

Regardless of whether C~~c~~ontainment is challenged, this amount of activity in C~~c~~ontainment, if released, could have such severe consequences that it is prudent to treat this as a P~~p~~otential L~~l~~oss of C~~c~~ontainment, such that a General Emergency declaration is warranted.

~~[*NUREG-1228, "Source Estimations During Incident Response to Severe Nuclear Power Plant Accidents," indicates that such conditions do not exist when the amount of clad damage is less than 20%. Unless there is a (site-specific) analysis justifying a higher value, it is recommended that a radiation monitor reading corresponding to 20% fuel clad damage be specified here.*]~~

~~The Heat Capacity Temperature Limit (HCTL) is the highest suppression pool temperature from which Emergency RPV Depressurization will not raise:~~

~~Suppression chamber temperature above the maximum temperature capability of the suppression chamber and equipment within the suppression chamber which may be required to operate when the RPV is pressurized,~~

~~OR~~

~~Suppression chamber pressure above Primary Containment Pressure Limit A, while the rate of energy transfer from the RPV to the containment is greater than the capacity of the containment vent.~~

~~The HCTL is a function of RPV pressure and suppression pool water level. It is utilized to preclude failure of the containment and equipment in the containment necessary for the safe shutdown of the plant and therefore, the inability to maintain plant parameters below the limit constitutes a potential loss of containment.~~

Explanation/Discussion/Definitions:

1(2)R44A and 1(2)R44B are the Containment High Range area radiation monitors. The threshold value of **2000 R/hr** has been calculated assuming the instantaneous release and dispersal of the reactor coolant noble gas and iodine inventory associated with 20% fuel clad damage into the Containment atmosphere.

EAL Bases Reference(s):

1. NEI 99-01, Rev. 05, Table 5-F-3 Containment Potential Loss 6.A
2. Calculation by Nuclear Fuels Group file title DS1.6-0098 "Verification of Emergency Action Levels for Event Classification" date 2/10/95

This page intentionally blank

EAL Category: F – Fission Product Barrier Degradation

Subcategory: Inventory

Initiating Condition: Potential Loss of Containment

Mode Applicability: 1 - Power Operations, 2 - Startup, 3 - Hot Standby, 4 - Hot Shutdown

EAL# & Point Value: **CB6-P (2 points)**

EAL:

Containment pressure **> 47 psig** and rising

Basis:

~~Potential Loss Threshold A~~

The ~~site~~ specific pressure is based on the containment design pressure.

Explanation/Discussion/Definitions:

The specified Containment pressure (**47 psig**) is the Containment design pressure. Proper actuation and operation of the Containment heat removal system when required should avoid Containment pressures in excess of this threshold. The threshold is therefore indicative of a loss of both RCS and Fuel Clad barriers in that it should not be exceeded without severe core degradation (metal-water reaction) or failure to trip in combination with RCS breach. This condition would be expected to require the declaration of a General Emergency.

Containment Pressure is used as a Containment Barrier threshold in addition to the CFST thresholds to address events in which the CFSTs may not yet be in use.

EAL Bases Reference(s):

1. NEI 99-01, Rev. 05, Table 5-F-3 Containment Potential Loss 2.A
2. 1(2)-EOP-CFST-1 Critical Safety Function Status Trees - F.05 Containment Environment Status Tree
3. Salem EOP Setpoint Basis Document - Vendor Doc. #320832

This page intentionally blank

EAL Category: F – Fission Product Barrier Degradation

Subcategory: Inventory

Initiating Condition: Potential Loss of Containment

Mode Applicability: 1 - Power Operations, 2 - Startup, 3 - Hot Standby, 4 - Hot Shutdown

EAL# & Point Value: **CB7-P (2 points)**

EAL:

Indications of **> 4%** H_2 inside Containment

Basis:

~~Potential Loss Threshold A~~

Existence of an explosive mixture means a hydrogen and oxygen concentration of at least the lower deflagration limit curve exists. The indications of potential loss under this EAL corresponds to some of those leading to the RED path in ~~potential loss threshold 1.A~~Containment barrier Potential Loss ~~A.1~~CB1-P~~above and may be declared by those sites using CSFSTs~~.

Explanation/Discussion/Definitions:

When hydrogen concentration in the Containment atmosphere exceeds **4%**, the possibility of an explosive mixture exists. Elevated hydrogen concentrations are likely to be present in the Containment only as a result of an inadequate core cooling, substantial metal-water reaction and a breach of the RCS barrier.

A **4%** mixture of H_2 with normal Containment atmosphere represents the deflagration lower limit. Any subsequent ignition and burn of this level mixture releases a substantial amount of energy that must be absorbed by the Containment structure, which is already under stress due to the Loss of the RCS Barrier.

Elevated Containment atmosphere hydrogen concentration is alarmed at ≥ 2% by overhead annunciator C-23, CNTMT H_2 LVL HI.

EAL Bases Reference(s):

1. NEI 99-01, Rev. 05, Table 5-F-3 Containment Potential Loss 2.B
2. 1(2)-EOP-FRCC-1 Response to Inadequate Core Cooling – Basis Document (pg 16)
3. Salem EOP Setpoint Basis Document - Vendor Doc. #320832
4. S1(S2).OP-AR.ZZ-0003(Q) OHA C-23, CNTMT H_2 LVL HI

EAL Category: F – Fission Product Barrier Degradation

Subcategory: Inventory

Initiating Condition: Potential Loss of Containment

Mode Applicability: 1 - Power Operations, 2 - Startup, 3 - Hot Standby, 4 - Hot Shutdown

EAL# & Point Value: **CB8-P (2 points)**

EAL:

Containment pressure **> 15 psig**

AND

EITHER of the following:

- NO Containment Spray Train in service
  AND
  < 5 CFCUs running in low speed

- One Containment Spray Train in service
  AND
  < 3 CFCUs running in low speed

Basis:

~~Potential Loss Threshold C~~

This threshold represents a P~~p~~otential L~~l~~oss of C~~c~~ontainment in that the C~~c~~ontainment heat removal/depressurization system is ~~(e.g., containment sprays, ice condenser fans, etc., but not including containment venting strategies) are~~ either lost or performing in a degraded manner, as indicated by C~~c~~ontainment pressure greater than the setpoint at which the equipment was supposed to have actuated.

Explanation/Discussion/Definitions:

A Containment pressure rise above **15 psig** (the Containment Spray initiation setpoint) indicates a major release of energy to the Containment. No Containment Spray with fewer than five Containment Fan Coil Units (CFCUs) running in low speed or only one train of Containment Spray in service with fewer than 3 CFCUs running in low speed indicates a condition in which systems designed for Containment heat removal and depressurization do not have the capacity to maintain Containment pressure below the structural design limit.

The Containment Fan Cooling System is designed to circulate and cool the Containment atmosphere in the event of a LOCA and thereby ensures that Containment pressure will not exceed its design value. Five fan-cooler units are capable of transferring heat from the Containment atmosphere at the post-accident design conditions. The UFSAR accident analyses determined a minimum of three fan-cooler units with at least one Containment Spray train is needed to maintain Containment integrity. Either of two Containment Spray trains containing a pump, associated valving and spray headers are independently capable of delivering 2,600 gpm.

EAL Bases Reference(s):

1. NEI 99-01, Rev. 05, Table 5-F-3 Containment Potential Loss 2.C
2. 1(2)-EOP-TRIP-1 Reactor Trip or Safety Injection
3. SGS Technical Specifications 3.6.2.1 Spray Additive System
4. SGS Technical Specifications 3.6.2.3 Containment Cooling System
5. UFSAR 6.2.2.1 Containment Spray System
6. UFSAR 6.2.2.2 Containment Fan Cooling System

EAL Category: F – Fission Product Barrier Degradation

Subcategory: Judgment

Initiating Condition: Potential Loss of Containment

Mode Applicability: 1 - Power Operations, 2 - Startup, 3 - Hot Standby, 4 - Hot Shutdown

EAL# & Point Value: **CB9-P (2 points)**

EAL:

ANY condition in the opinion of the Emergency Coordinator that indicates potential loss of the Containment barrier

Basis:

Thi~~sese~~ threshold~~s~~ addresses any other factors that are to be used by the ~~Emergency Director~~Emergency Coordinator in determining whether the Containment barrier is ~~lost or~~ potentially lost. In addition, the inability to monitor the barrier should also be incorporated in this threshold as a factor in ~~Emergency Director~~Emergency Coordinator judgment that the barrier may be considered ~~lost or~~ potentially lost.

The Containment barrier should not be declared ~~lost or~~ potentially lost based on exceeding Technical Specification action statement criteria, unless there is an event in progress requiring mitigation by the Containment barrier. When no event is in progress (Loss or Potential Loss of either Fuel Clad and/or RCS) the Containment barrier status is addressed by Technical Specifications.

Explanation/Discussion/Definitions:

The Emergency Coordinator judgment threshold addresses any other factors relevant to determining if the Containment barrier is potentially lost. Such a determination should include **IMMINENT** barrier degradation, barrier monitoring capability and dominant accident sequences.

- Barrier degradation exists if the degradation will likely occur within two hours based on a projection of current safety system performance.
- Barrier monitoring capability is decreased if there is a loss or lack of reliable indicators. This assessment should include instrumentation operability concerns, readings from portable instrumentation and consideration of offsite monitoring results.

- Dominant accident sequences lead to degradation of all fission product barriers and likely entry to the EOPs. The Emergency Coordinator should be mindful of the Loss of AC power (Station Blackout) and ATWT EALs to assure timely emergency classification declarations.

Definitions:

IMMINENT: Mitigation actions have been ineffective, additional actions are not expected to be successful, and trended information indicates that the event or condition will occur within approximately 2 hours (unless a different time is specified).

EAL Bases Reference(s):

1. NEI 99-01, Rev. 05, Table 5-F-3 Containment Potential Loss 8.A

EAL Category: F – Fission Product Barrier Degradation

Subcategory: Inventory

Initiating Condition: Loss of Containment

Mode Applicability: 1 - Power Operations, 2 - Startup, 3 - Hot Standby, 4 - Hot Shutdown

EAL# & Point Value: **CB1-L (3 points)**

EAL:

A Containment pressure rise followed by a rapid unexplained drop in Containment pressure

Basis:

~~Loss Thresholds A and B~~

Rapid unexplained loss of pressure (i.e., not attributable to containment spray or condensation effects) following an initial pressure increase from a primary or secondary high energy line break indicates a L~~l~~oss of C~~c~~ontainment integrity. ~~Containment pressure and sump levels should increase as a result of mass and energy release into containment from a LOCA. Thus, sump level or pressure not increasing indicates containment bypass and a loss of containment integrity.~~

This indicator relies on operator recognition of an unexpected response for the condition and therefore does not have a specific value associated with it. The unexpected response is important because it is the indicator for a C~~c~~ontainment bypass condition.

Explanation/Discussion/Definitions:

The term "Unexplained" signifies the pressure drop is not a result of operator actions taken to reduce Containment pressure. The term "rapid" indicates the Containment breach is relatively large.

For cases in which secondary coolant provides the source of energy that raised Containment pressure, a faulted Steam Generator is possible. This event would require actions in 1(2)-EOP-LOSC-1 to isolate the Main Steam lines, maintain intact Steam Generators for an RCS Heat Sink, minimize Containment pressure, and minimize RCS cooldown.

EAL Bases Reference(s):

1. NEI 99-01, Rev. 05, Table 5-F-3 Containment Barrier Loss 2.A
2. UFSAR Table 15.4-22 LOCA Containment Response Results (Loss of Offsite Power Assumed)
3. UFSAR Figures 15.4-43a, b and c Containment Pressure (varying initial conditions)
4. UFSAR Figure 15.4-44 Containment Pressure
5. 1(2)-EOP-LOSC-1 Loss of Secondary Coolant

EAL Category: F – Fission Product Barrier Degradation

Subcategory: Inventory

Initiating Condition: Loss of Containment

Mode Applicability: 1 - Power Operations, 2 - Startup, 3 - Hot Standby, 4 - Hot Shutdown

EAL# & Point Value: **CB2-L (3 points)**

EAL:

Containment pressure or sump level response NOT consistent with LOCA conditions

Basis:

~~Loss Thresholds A and B~~

~~Rapid unexplained loss of pressure (i.e., not attributable to containment spray or condensation effects) following an initial pressure increase from a primary or secondary high energy line break indicates a loss of containment integrity.~~ Containment pressure and sump levels should increase as a result of mass and energy release into C~~c~~ontainment from a LOCA. Thus, sump level or pressure not increasing indicates C~~c~~ontainment bypass and a L~~l~~oss of C~~c~~ontainment integrity.

This indicator relies on operator recognition of an unexpected response for the condition and therefore does not have a specific value associated with it. The unexpected response is important because it is the indicator for a C~~c~~ontainment bypass condition.

Explanation/Discussion/Definitions:

A LOCA is expected to result in a significant Containment pressure rise. This leak rate should result in the accumulation of RCS inventory in the Containment sump as the level rises. A lack of expected Containment sump level response or Containment pressure not rising indicates that the Containment barrier has been bypassed.

EAL Bases Reference(s):

1. NEI 99-01, Rev. 05, Table 5-F-3 Containment Barrier Loss 2.B
2. UFSAR Table 15.4-22 LOCA Containment Response Results (Loss of Offsite Power Assumed)
3. UFSAR Figures 15.4-43a, b and c Containment Pressure (varying initial conditions)
4. UFSAR Figure 15.4-44 Containment Pressure

This page intentionally blank

EAL Category: F – Fission Product Barrier Degradation

Subcategory: Inventory

Initiating Condition: Loss of Containment

Mode Applicability: 1 - Power Operations, 2 - Startup, 3 - Hot Standby, 4 - Hot Shutdown

EAL# & Point Value: **CB3-L (3 points)**

EAL:

RUPTURED SG that is also **FAULTED** outside of Containment

Basis:

~~Potential Loss Threshold A~~

The L~~l~~oss threshold recognizes that SG tube leakage can represent a bypass of the Containment barrier as well as a L~~l~~oss of the RCS barrier.

~~Users should realize that the two loss thresholds~~This Loss threshold and Containment Loss CB4-L could be considered redundant. ~~This was recognized during the development process.~~ The inclusion of a~~n~~ threshold that uses terms that are commonly used in Emergency Operating Procedure ~~commonly used terms~~s like "**RUPTURED** and **FAULTED**" adds to the ease of the classification process and has been included based on this human factor concern.

~~This threshold results in a NOUE for smaller breaks that; (1) do not exceed the normal charging capacity threshold in RCS leak rate barrier Potential Loss threshold, or (2) do not result in ECCS actuation in RCS SG tube rupture barrier Loss threshold. For larger breaks, RCS barrier threshold criteria would result in an Alert.~~ For SG tube ruptures which may involve multiple steam generators or **UNISOLABLE** secondary line breaks, this threshold would exist in conjunction with RCS barrier thresholds and would result in a Site Area Emergency. Escalation to General Emergency would be based on "Potential Loss" of the Fuel Clad Barrier.

~~Loss Threshold A~~

This threshold addresses the condition in which a **RUPTURED** steam generator is also **FAULTED**. This condition represents a bypass of the RCS and containment barriers and is a subset of the ~~second~~ threshold CB4-L. In conjunction with RCS leak rate barrier loss threshold, this would always result in the declaration of a Site Area Emergency.

Explanation/Discussion/Definitions:

This threshold is intended to include all flow paths of Contaminated secondary coolant to the environment directly or through systems which exhaust to the Plant Vent (e.g.; leakage to the Auxiliary Building ventilation system). An exception would be if the EOPs require steaming the ruptured Steam Generator to the main condenser. The main condenser off-gas (R15) pathway is excluded from this EAL provided the release is both controlled and monitored.

Definitions:

RUPTURED: (PWRs) In a steam generator, existence of primary-to-secondary leakage of a magnitude sufficient to require or cause a reactor trip and safety injection.

FAULTED: (PWRs) In a steam generator, the existence of secondary side leakage that results in an uncontrolled drop in steam generator pressure or the steam generator being completely depressurized.

UNISOLABLE: A breach or leak that cannot be promptly isolated from the Control Room.

EAL Bases Reference(s):

1. NEI 99-01, Rev. 05, Table 5-F-3 Containment Barrier Loss 4.A
2. 1(2)-EOP-SGTR-1 Steam Generator Tube Rupture
3. 1(2)-EOP-SGTR-3 SGTR with LOCA – Subcooled Recovery

EAL Category: F – Fission Product Barrier Degradation

Subcategory: Inventory

Initiating Condition: Loss of Containment

Mode Applicability: 1 - Power Operations, 2 - Startup, 3 - Hot Standby, 4 - Hot Shutdown

EAL# & Point Value: **CB4-L (3 points)**

EAL:

Primary-to-secondary leakrate **> 25 gpm**

AND

UNISOLABLE steam release from affected SG to the environment

Basis:

~~Potential Loss Threshold A~~

The L~~l~~oss threshold recognizes that SG tube leakage can represent a bypass of the Containment barrier as well as a L~~l~~oss of the RCS barrier.

~~Users should realize that the two loss thresholds~~This Loss threshold and Containment Loss CB3-L could be considered redundant. ~~This was recognized during the development process. The inclusion of an threshold that uses Emergency Procedure commonly used terms like "RUPTURED and FAULTED" adds to the ease of the classification process and has been included based on this human factor concern.~~

This threshold results in a ~~N~~OUE for smaller breaks that; (1) do not exceed the normal charging capacity threshold in RCS leak rate barrier Potential Loss ~~threshold~~RB3-P, or (2) do not result in ECCS (SI) actuation in RCS SG tube rupture barrier Loss ~~threshold~~RB3-L. For larger breaks, RCS barrier threshold criteria would result in an Alert. For SG tube ruptures which may involve multiple steam generators or **UNISOLABLE** secondary line breaks, this threshold would exist in conjunction with RCS barrier thresholds and would result in a Site Area Emergency. Escalation to General Emergency would be based on "Potential Loss" of the Fuel Clad Barrier.

~~Loss Threshold B~~

This threshold addresses SG tube leaks that exceed **25** ~~10~~ **gpm** in conjunction with an **UNISOLABLE** release path to the environment from the affected steam generator. The

threshold for establishing the **UNISOLABLE** secondary side release is intended to be a prolonged release of radioactivity from the **RUPTURED** steam generator directly to the environment. This could be expected to occur when the main condenser is unavailable to accept the contaminated steam (i.e., SG tube rupture with concurrent loss of off-site power and the **RUPTURED** steam generator is required for plant cooldown or a stuck open relief valve). If the main condenser is available, there may be releases via air ejectors, gland seal exhausters, and other similar controlled, and often monitored, pathways. These pathways do not meet the intent of an **UNISOLABLE** release path to the environment. These minor releases are assessed using EALs in Category R, Abnormal Rad Levels / Radiological Effluent ~~ICs~~.

~~[*The leakage threshold for this* threshold *has been increased with Revision 3. In the earlier revision, the threshold was leakage greater than T/S allowable. Since the prior revision, many plants have implemented reduced steam generator T/S limits (e.g., 150 gpd) as a defense-in-depth associated with alternate steam generator plugging criteria. The 150 gpd threshold is deemed too low for use as an emergency threshold. A pressure boundary leakage of 10 gpm was used as the threshold in IC SU5, RCS Leakage, and is deemed appropriate for this* threshold.]~~

Explanation/Discussion/Definitions:

Definitions:

RUPTURED: (PWRs) In a steam generator, existence of primary-to-secondary leakage of a magnitude sufficient to require or cause a reactor trip and safety injection.

UNISOLABLE: A breach or leak that cannot be promptly isolated from the Control Room.

EAL Bases Reference(s):

1. NEI 99-01, Rev. 05, Table 5-F-3 Containment Barrier Loss 4.B

EAL Category: F – Fission Product Barrier Degradation

Subcategory: Other

Initiating Condition: Loss of Containment

Mode Applicability: 1 - Power Operations, 2 - Startup, 3 - Hot Standby, 4 - Hot Shutdown

EAL# & Point Value: **CB5-L (3 points)**

EAL:

Failure of **ALL** valves in **ANY one** line to close

AND

Direct downstream pathway to the environment exists after Containment isolation signal (Note 8)

Note 8: A direct downstream release is a pathway from the Containment to any environment outside the Containment when Containment or system isolation is required due to: a safety injection signal, Containment pressure greater than 4 psig, or a **VALID** containment ventilation isolation signal and the pathway cannot be isolated from the Control Room.

Basis:

This threshold addresses incomplete containment isolation that allows direct release to the environment.

The use of the modifier "direct" in defining the release path discriminates against release paths through interfacing liquid systems. The existence of an in–line charcoal filter does not make a release path indirect since the filter is not effective at removing fission product noble gases. Typical filters have an efficiency of 95-99% removal of iodine. Given the magnitude of the core inventory of iodine, significant releases could still occur. In addition, since the fission product release would be driven by boiling in the reactor vessel, the high humidity in the release stream can be expected to render the filters ineffective in a short period.

There is no Potential Loss threshold associated with this item.

Explanation/Discussion/Definitions:

Indications of Containment failure may be evident without the exact pathway being understood at the time of the failure. If the Containment or part of the RCS is required to be isolated and

there are **VALID** indications that the Containment is not isolated, the Containment barrier should be considered lost.

Area Radiation monitor alarms that exceed normal monitor indications without a reason to expect another source such as a gas decay tank, spill, piping shine or fuel handling problem, indicate a loss of the Containment. Area temperature alarms, rising sump level indications or unexpected system flow indications outside Containment may also indicate a loss of the Containment. If the Containment Barrier is lost without a loss of the Fuel Clad Barrier, effluent radiation readings may not increase significantly. Unexpected area temperature alarms, unexpected flow rates or sump level increases outside of Containment, however, may provide the indications that the Containment atmosphere is no longer isolated. In addition, the term "to the environment" is intended to include any leakage that cannot be isolated either directly or through systems that exhaust to the Plant Vent (e.g., leakage to the Auxiliary Building Ventilation System) or directly to any other area outside the Containment.

A safety injection, high Containment pressure or a Containment vent isolation signal represents a situation that requires the Containment to be isolated from the outside environment.

As indicated in Note 8, this EAL allows for valve closure from the Control Room, prior to event classification, to isolate any system not completely isolated. Leakage cannot be isolated from the Control Room refers to valve(s) that did not completely close when demanded (either automatically or manually). This includes Motor Operated Valves not controlled by isolation logic but are manually controlled from the Control Room. For example, if the isolation logic fails to cause valve closure but operator actions implemented in the Control Room successfully isolates the Containment breach path, classification under this EAL is NOT WARRANTED.

Although this EAL ALLOWS for valve closure from the Control Room, the time to attempt closure and make a decision if containment leak isolation was successful RUNS CONCURRENTLY with the EAL 15-minute assessment clock.

- If, during the EAL 15-minute assessment period attempts from the Control Room to isolate the containment ARE SUCCESSFUL then, this EAL is NOT exceeded and classification per this EAL should NOT be made.

- If, during the EAL 15-minute assessment period attempts from the Control Room to isolate the containment ARE NOT SUCCESSFUL then, this EAL is exceeded and classification should be made at that time. There is no need to wait the full 15 minutes.

- If near the end of the 15 minute assessment period and the control room staff has not been able to attempt containment isolation or the EC is not convinced that an isolation attempt has been successful, then this EAL is exceeded and classification should be made at or before the 15-minute assessment time expires.

Definitions:

VALID: An indication, report, or condition, is considered to be **VALID** when it is verified by (1) an instrument channel check, (2) indications on related or redundant indicators, or (3) by direct observation by plant personnel, such that doubt related to the indicator's operability, the condition's existence, or the report's accuracy is removed. Implicit in this definition is the need for timely assessment.

EAL Bases Reference(s):

1. NEI 99-01, Rev. 05, Table 5-F-3 Containment Barrier Loss 5.A
2. SGS Technical Specifications 3.6.3 Containment Isolation Valves
3. 1(2)-EOP-TRIP-1 Reactor Trip or Safety Injection
4. 1(2)-EOP-LOCA-6 LOCA Outside Containment

This page intentionally blank

EAL Category: F – Fission Product Barrier Degradation

Subcategory: Judgment

Initiating Condition: Loss of Containment

Mode Applicability: 1 - Power Operations, 2 - Startup, 3 - Hot Standby, 4 - Hot Shutdown

EAL# & Point Value: **CB6-L (3 points)**

EAL:

ANY condition in the opinion of the Emergency Coordinator that indicates loss of the Containment barrier

Basis:

This~~ese~~ thresholds addresses any other factors that are to be used by the ~~Emergency Director~~Emergency Coordinator in determining whether the Containment barrier is lost~~ or potentially lost~~. In addition, the inability to monitor the barrier should also be incorporated in this threshold as a factor in ~~Emergency Director~~Emergency Coordinator judgment that the barrier may be considered lost~~ or potentially lost~~.

The Containment barrier should not be declared lost~~ or potentially lost~~ based on exceeding Technical Specification action statement criteria, unless there is an event in progress requiring mitigation by the Containment barrier. When no event is in progress (Loss or Potential Loss of either Fuel Clad and/or RCS) the Containment barrier status is addressed by Technical Specifications.

Explanation/Discussion/Definitions:

The Emergency Coordinator judgment threshold addresses any other factors relevant to determining if the Containment barrier is lost. Such a determination should include **IMMINENT** barrier degradation, barrier monitoring capability and dominant accident sequences.

- Barrier degradation exists if the degradation will likely occur within two hours based on a projection of current safety system performance.
- Barrier monitoring capability is decreased if there is a loss or lack of reliable indicators. This assessment should include instrumentation operability concerns, readings from portable instrumentation and consideration of offsite monitoring results.
- Dominant accident sequences lead to degradation of all fission product barriers and likely entry to the EOPs. The Emergency Coordinator should be mindful of the Loss of

AC power (Station Blackout) and ATWT EALs to assure timely emergency classification declarations.

Definitions:

IMMINENT: Mitigation actions have been ineffective, additional actions are not expected to be successful, and trended information indicates that the event or condition will occur within approximately 2 hours (unless a different time is specified).

EAL Bases Reference(s):

1. NEI 99-01, Rev. 05, Table 5-F-3 Containment Loss 8.A

EALs for:

Cold Shutdown Conditions

EAL Category: C – Cold Shutdown / Refuel System Malfunction

EAL Subcategory: 1 – Loss of AC Power

Initiating Condition: AC power capability to vital buses reduced to a single power source for 15 minutes or longer such that any additional single failure would result in complete loss of AC power to vital buses

Mode Applicability: 5 - Cold Shutdown, 6 - Refueling

EAL# & Classification Level: **CU1.1 – UNUSUAL EVENT**

EAL:

Loss of 4.16 KV Vital Bus Power Sources (Offsite and Onsite) which results in the availability of only **one** 4.16 KV Vital Bus Power Source (Offsite or Onsite)

AND

≥ 15 minutes have elapsed (Note 3)

Note 3: The Emergency Coordinator should NOT wait until the applicable time has elapsed, but should declare the event as soon as it is determined that the condition will likely exceed the applicable time.

Basis:

The condition indicated by this ~~IC~~ EAL is the degradation of the off-site and on-site AC power systems such that any additional single failure would result in a station blackout. This condition could occur due to a loss of off-site power with a concurrent failure of all but one emergency diesel generator to supply power to its ~~emergency~~ vital bus~~ses~~. The subsequent loss of this single power source would escalate the event to an ALERT in accordance with ~~CA3~~EAL CA1.1.

Fifteen minutes was selected as a threshold to exclude transient or momentary losses of power.

Explanation/Discussion/Definitions:

"Availability" means the power source can be aligned to provide power to a vital bus within 15 minutes or is currently supplying power to at least one vital bus.

The availability of EDGs that have not been challenged to start during degradation of AC power sources to the 4KV vital buses should be based on meeting Technical Specification action requirements for loss of offsite AC power sources.

The AC power distribution is summarized in Attachment 2, page 2.

Emergency Classification escalates to an ALERT under EAL CA1.1 based on a loss of all offsite and all onsite AC power to all 4KV vital buses.

This cold condition UNUSUAL EVENT EAL is equivalent to the hot condition ALERT EAL SA1.1.

EAL Bases Reference(s):

1. NEI 99-01, Rev. 05 – CU3 Example EAL #1
2. UFSAR Figure 8.2-2 500 kV Switchyard Diagram
3. UFSAR Figure 8.3-1 Auxiliary Power System Diagram
4. UFSAR 8.1.1 Utility Grid System and Interconnections
5. UFSAR 8.3.1 Power
6. SGS Technical Specifications 3.8.1.2 Electrical Power Systems - Shutdown
7. SGS Technical Specifications 3.8.2.2 AC Distribution - Shutdown
8. 1(2)-EOP-TRIP-1 Reactor Trip or Safety Injection
9. 1(2)-EOP-LOPA-1 Loss of All AC Power
10. S1(S2).OP-AB.LOOP-0001(Q) Loss of Off-Site Power
11. S1(S2).OP-AB.4KV-0001(Q) Loss of 1A 4KV Vital Bus
12. S1(S2).OP-AB.4KV-0002(Q) Loss of 1B 4KV Vital Bus
13. S1(S2).OP-AB.4KV-0003(Q) Loss of 1C 4KV Vital Bus

EAL Category: C – Cold Shutdown / Refuel System Malfunction

EAL Subcategory: 1 – Loss of AC Power

Initiating Condition: Loss of all offsite and all onsite AC power to vital buses for 15 minutes or longer

Mode Applicability: 5 - Cold Shutdown, 6 - Refueling, D - Defueled

EAL# & Classification Level: **CA1.1 – ALERT**

EAL:

Loss of **all** Power (Onsite and Offsite) to **all** 4KV Vital Buses

AND

≥ 15 minutes have elapsed (Note 3)

Note 3: The Emergency Coordinator should NOT wait until the applicable time has elapsed, but should declare the event as soon as it is determined that the condition will likely exceed the applicable time.

Basis:

Loss of all AC power compromises all plant safety systems requiring electric power including RHR, ECCS, Containment Heat Removal, Spent Fuel Heat Removal and the Ultimate Heat Sink (Service Water).

The event can be classified as an ALERT when in cold shutdown, refueling, or defueled mode because of the significantly reduced decay heat and lower temperature and pressure, increasing the time to restore one of the ~~emergency~~ vital busses, relative to that specified for the SITE AREA EMERGENCY EAL.

Escalating to SITE AREA EMERGENCY, if appropriate, is by EALs in Category R, Abnormal Rad Levels / Rad~~iological~~ Effluent ~~ICs~~.

Fifteen minutes was selected as a threshold to exclude transient or momentary power losses.

Explanation/Discussion/Definitions:

The intent of this EAL is to classify degraded AC power events that result in a loss of all offsite power sources (13.8 KV) to the 4KV vital buses along with a loss of all onsite power sources (EDGs).

The AC power distribution is summarized in Attachment 2, page 2.

This cold condition ALERT EAL is equivalent to the hot condition SITE AREA EMERGENCY EAL SS1.1.

EAL Bases Reference(s):

1. NEI 99-01, Rev. 05 – CA3 Example EAL #1
2. UFSAR Figure 8.2-2 500 kV Switchyard Diagram
3. UFSAR Figure 8.3-1 Auxiliary Power System Diagram
4. UFSAR 8.1.1 Utility Grid System and Interconnections
5. UFSAR 8.3.1 Power
6. SGS Technical Specifications 3.8.1.2 Electrical Power Systems - Shutdown
7. SGS Technical Specifications 3.8.2.2 AC Distribution - Shutdown
8. 1(2)-EOP-TRIP-1 Reactor Trip or Safety Injection
9. 1(2)-EOP-LOPA-1 Loss of All AC Power
10. S1(S2).OP-AB.LOOP-0001(Q) Loss of Off-Site Power
11. S1(S2).OP-AB.4KV-0001(Q) Loss of 1A 4KV Vital Bus
12. S1(S2).OP-AB.4KV-0002(Q) Loss of 1B 4KV Vital Bus
13. S1(S2).OP-AB.4KV-0003(Q) Loss of 1C 4KV Vital Bus

EAL Category: C – Cold Shutdown / Refuel System Malfunction

EAL Subcategory: 2 – Loss of DC Power

Initiating Condition: Loss of required DC power for 15 minutes or longer

Mode Applicability: 5 - Cold Shutdown, 6 - Refueling

EAL# & Classification Level: **CU2.1 – UNUSUAL EVENT**

EAL:

< 114 VDC bus voltage indications on **All** 125 VDC vital buses for **≥ 15 minutes** (Note 3)

OR

< 25 VDC bus voltage indications on **both** 28 VDC vital buses for **≥ 15 minutes** (Note 3) **AND** loss of control of Safety Related Equipment from the Control Room has been confirmed

Note 3: The Emergency Coordinator should NOT wait until the applicable time has elapsed, but should declare the event as soon as it is determined that the condition will likely exceed the applicable time.

Basis:

The purpose of this ~~IC~~ EAL and its associated EALs is to recognize a loss of DC power compromising the ability to monitor and control the removal of decay heat during Cold Shutdown or Refueling operations.

~~[*This EAL is intended to be anticipatory in as much as the operating crew may not have necessary indication and control of equipment needed to respond to the loss.*]~~

~~[*Plants will routinely perform maintenance on a Train related basis during shutdown periods The required busses are the minimum allowed by Technical Specifications for the mode of operation.*]~~ It is intended that the loss of the operating (operable) train is to be considered. If this loss results in the inability to maintain cold shutdown, the escalation to an ALERT will be per ~~CA4~~EAL CA4.1.

~~[*(Site specific) bus voltage should be based on the minimum bus voltage necessary for the operation of safety related equipment. This voltage value should incorporate a margin of at least 15 minutes of operation before the onset of inability to operate those loads. This voltage is usually near the minimum voltage selected when battery sizing is performed. Typically the value for the entire battery set is approximately 105 VDC. For a 60 cell string of batteries the cell voltage is typically 1.75 Volts per cell. For a 58 string battery set the minimum voltage is typically 1.81 Volts per cell.*]~~

Fifteen minutes was selected as a threshold to exclude transient or momentary power losses.

Explanation/Discussion/Definitions:

The specified bus voltage indications (rounded for readability on Control Room instrumentation) are the minimum voltage requirements for operability of the 125 VDC buses and 28 VDC buses following battery discharge tests. Although continued operation may occur with degraded voltage, these values signify the minimum operable voltages allowed.

This UNUSUAL EVENT EAL is the cold condition equivalent of the hot condition loss of DC power SITE AREA EMERGENCY EAL SS2.1.

EAL Bases Reference(s):

1. NEI 99-01, Rev. 05, SS3 Example EAL #1
2. SC.MD-ST.125-0004 (Q) 125 Volt Station Batteries 18 Month Service Test and Associated Surveillance Testing Using BCT-2000
3. SC.MD-ST.28D-0004 (Q) 28 Volt Station Batteries 18 Month Service Test and Associated Surveillance Using BCT-2000
4. UFSAR 8.3.2 DC Power
5. SGS Technical Specifications 3.8.2.3 125 Volt DC Distribution - Shutdown
6. SGS Technical Specifications 3.8.2.5 28 Volt DC Distribution - Shutdown
7. S1(S2).OP-SO.125-0005 1(2)A 125VDC Bus Operation
8. S1(S2).OP-SO.125-0006 1(2)B 125VDC Bus Operation
9. S1(S2).OP-SO.125-0007 1(2)C 125VDC Bus Operation

EAL Category: C – Cold Shutdown / Refuel System Malfunction

EAL Subcategory: 3 – RCS Level

Initiating Condition: **UNPLANNED** loss of RCS inventory

Mode Applicability: 5 - Cold Shutdown

EAL# & Classification Level: **CU3.1 – UNUSUAL EVENT**

EAL:

RCS leakage results in the inability to maintain or restore RCS level to **EITHER**:

- Pressurizer Level **> 17%** (cold calibration value)
- Within the target band established by procedure (when the level band is established below the pressurizer)

AND

≥ 15 minutes have elapsed (Note 3)

Note 3: The Emergency Coordinator should NOT wait until the applicable time has elapsed, but should declare the event as soon as it is determined that the condition will likely exceed the applicable time.

Basis:

This EAL is considered to be a potential degradation of the level of safety of the plant. The inability to maintain or restore level is indicative of loss of RCS inventory.

Relief valve normal operation should be excluded from this ~~IC~~EAL. However, a relief valve that operates and fails to close per design should be considered applicable to this ~~IC~~ EAL if the relief valve cannot be isolated.

Prolonged loss of RCS Inventory may result in escalation to the ALERT emergency classification level via either EAL CA3.1 or EAL CA4.1.

Explanation/Discussion/Definitions:

When Pressurizer (PZR) level drops to 17%, letdown isolates and pressurizer heaters are deenergized. The Pressurizer cold calibration level is monitored on LI-462. This condition is signaled by overhead annunciator E-36, PZR HTR OFF LVL LO. Cold calibrated Pressurizer level is indicated on computer points and SPDS.

In Cold Shutdown mode, PZR level may be intentionally lowered below the letdown isolation setpoint (e.g., in preparation to detension the reactor vessel head, etc.). For such evolutions, this EAL is applicable if RCS level cannot be restored and maintained within the prescribed target band specified in operating procedures.

Definitions:

> **UNPLANNED**: A parameter change or an event that is not the result of an intended evolution and requires corrective or mitigative actions.

EAL Basis Reference(s):

1. NEI 99-01, Rev. 05, CU1 Example EAL #1
2. S1(S2).OP-AR.ZZ-0005(Q) OHA- E-36, PZR HTR OFF LVL LO
3. S1(S2).OP-IO.ZZ-0006(Q) Hot Standby to Cold Shutdown
4. S1(S2).OP-IO.ZZ-0007(Q) Cold Shutdown to Refueling
5. S1(S2).OP-SO.RC-0005 (Q) Draining the Reactor Coolant System To ≥101 Foot Elevation
6. S1(S2).OP-SO.RC-0006 (Q) Draining the Reactor Coolant System < 101ft Elevation with Fuel in the Vessel

EAL Category: C – Cold Shutdown / Refuel System Malfunction

EAL Subcategory: 3 – RCS Level

Initiating Condition: **UNPLANNED** loss of RCS inventory

Mode Applicability: 6 - Refueling

EAL# & Classification Level: **CU3.2 – UNUSUAL EVENT**

EAL:

RCS level CANNOT be monitored with a loss of RCS inventory as indicated by **ANY** unexplained RCS leakage indication, **Table C-1**

Table C-1 RCS Leakage Indications
• Rise in Containment sump pump run frequency • Aux Building sump level rise • PRT level rise • RWST level rise • RCDT level rise • Rise in RCS make-up rate • Observation of RCS leakage that is **UNISOLABLE**

Basis:

This ~~IC~~ EAL is a precursor of more serious conditions and considered to be a potential degradation of the level of safety of the plant.

~~Refueling evolutions that decrease RCS water level below the RPV flange are carefully planned and procedurally controlled. An UNPLANNED event that results in water level decreasing below the RPV flange, or below the planned RCS water level for the given evolution (if the planned RCS water level is already below the RPV flange), warrants declaration of a NOUE due to the reduced RCS inventory that is available to keep the core covered.~~

~~The allowance of 15 minutes was chosen because it is reasonable to assume that level can be restored within this time frame using one or more of the redundant means of refill that should be available. If level cannot be restored in this time frame then it may indicate a more serious condition exists.~~

~~Continued loss of RCS Inventory will result in escalation to the ALERT emergency classification level via either CA1 or CA4.~~

~~[*The difference between CU1 and CU2 deals with the RCS conditions that exist between cold shutdown and refueling modes. In cold shutdown the RCS will normally be intact and standard RCS inventory and level monitoring means are available. In the refueling mode the RCS is not intact and RPV level and inventory are monitored by different means*].~~

~~EAL #2~~

This EAL addresses conditions in the R~~r~~efueling mode~~-~~ when normal means of core temperature indication and RCS level indication may not be available. Redundant means of ~~RPV~~ RCS level indication will normally be installed (including the ability to monitor level visually) to assure that the ability to monitor level will not be interrupted. However, if all level indication were to be lost during a loss of RCS inventory event, the operators would need to determine that ~~RPV~~ RCS inventory loss was occurring by observing ~~sump and tank level changes~~Table C-1 indications. ~~Sump and tank level~~Table C-1 ~~increases~~RCS leakage indications must be evaluated against other potential sources of leakage such as cooling water sources inside the containment to ensure they are indicative of RCS leakage.

Escalation to the ALERT emergency classification level would be via ~~either~~ EAL ~~CA1~~ CA3.2 or EAL CA4.1.

Explanation/Discussion/Definitions:

During refueling, the reactor head and associated RVLIS piping are removed. Visual observation by personnel on the refuel floor in communication with the Control Room may also provide indication of refueling cavity water level and RCS water level.

In this EAL, all level indication is unavailable and the RCS inventory loss must be detected by the leakage indications listed in Table C-1. Level increases must be evaluated against other potential sources of leakage such as cooling water sources inside the Containment to ensure they are indicative of RCS leakage. Visual observation of leakage from systems connected to the RCS in areas inside or outside the Containment that cannot be isolated could be indicative of a loss of RCS inventory.

Definitions:

UNPLANNED: A parameter change or an event that is not the result of an intended evolution and requires corrective or mitigative actions.

UNISOLABLE: A breach or leak that cannot be promptly isolated from the Control Room.

EAL Bases Reference(s):

1. NEI 99-01, Rev. 05, CU2 Example EAL #2
2. S1(S2).OP-SO.RVL-0001 Reactor Vessel Level Instrumentation System
3. UFSAR 5.6.5 Reactor Vessel Water Level
4. UFSAR 7.3.1.1.9 Instrumentation Used During a Loss of Coolant Accident
5. S1(S2).OP-AB.RHR-0002(Q) Loss of RHR at Reduced Inventory
6. S1(S2).OP-SO.RC-0005(Q) Draining the Reactor Coolant System To ≥101 Foot Elevation
7. UFSAR Figure 6.3-3 Containment Sump Pit
8. UFSAR 6.3.2.2 Equipment and Component Description (ECCS)
9. UFSAR Figure 6.2-17 Containment Isolation Pressurizer Relief Tank Connections
10. S1(S2).OP-AB.RC-0001(Q) Reactor Coolant System Leak

This page intentionally blank

EAL Category: C – Cold Shutdown / Refuel System Malfunction

EAL Subcategory: 3 – RCS Level

Initiating Condition: **UNPLANNED** loss of RCS inventory

Mode Applicability: 6 - Refueling

EAL# & Classification Level: **CU3.3 – UNUSUAL EVENT**

EAL:

UNPLANNED RCS level drop below **EITHER** of the following:

- **104 ft** (Reactor Vessel flange)
- RCS level band (when the RCS level band is established below the Reactor Vessel flange)

AND

≥ 15 minutes have elapsed (Note 3)

Note 3: The Emergency Coordinator should NOT wait until the applicable time has elapsed, but should declare the event as soon as it is determined that the condition will likely exceed the applicable time.

Basis:

This EAL is a precursor of more serious conditions and considered to be a potential degradation of the level of safety of the plant.

Refueling evolutions that decrease RCS water level below the ~~RPV~~ Reactor Vessel flange are carefully planned and procedurally controlled. An **UNPLANNED** event that results in water level decreasing below the ~~RPV~~ Reactor Vessel flange, or below the planned RCS water level for the given evolution (if the planned RCS water level is already below the ~~RPV~~ Reactor Vessel flange), warrants declaration of a ~~NO~~UE due to the reduced RCS inventory that is available to keep the core covered.

The allowance of **15 minutes** was chosen because it is reasonable to assume that level can be restored within this time frame using one or more of the redundant means of refill that should be available. If level cannot be restored in this time frame then it may indicate a more serious condition exists.

Continued loss of RCS Inventory will result in escalation to the ALERT emergency classification level via either EAL ~~CA1~~CA3.1 or EAL CA4.1.

~~[The difference between CU1 and CU2 deals with the RCS conditions that exist between cold shutdown and refueling modes. In cold shutdown the RCS will normally be intact and standard RCS inventory and level monitoring means are available. In the refueling mode the RCS is not intact and RPV level and inventory are monitored by different means].~~

~~EAL #1~~

This EAL involves a decrease in RCS level below the top of the ~~RPV~~ Reactor Vessel flange that continues for **15 minutes** due to an **UNPLANNED** event. This EAL is not applicable to decreases in flooded ~~reactor~~ refueling cavity level, which is addressed by EAL ~~AU2 EAL1~~RU2.1, until such time as the level decreases to the level of the vessel flange.

~~[For BWRs] if RPV level continues to decrease and reaches the Low-Low ECCS Actuation Setpoint then escalation to CA1 would be appropriate.~~

Explanation/Discussion/Definitions:

104 ft is the Reactor Vessel flange elevation.

RCS water level is normally monitored using the instrument ranges illustrated in Attachment 2, page 10.

During refueling, the reactor head and associated RVLIS piping are removed. Visual observation by personnel on the refuel floor in communication with the Control Room may also provide indication of refueling cavity water level and RCS water level.

In cold conditions, RCS level may be intentionally lowered below the Reactor Vessel flange (e.g., detensioning the Reactor Vessel head, reduced inventory conditions, etc.). For such evolutions, this EAL is applicable if RCS level cannot be restored and maintained within the prescribed target band.

This Cold Shutdown EAL represents the hot condition EAL SU7.1, in which RCS leakage is associated with Technical Specification limits. In cold conditions, these limits are not applicable; hence, the use of RCS level as the parameter of concern in this EAL.

Definitions:

> **UNPLANNED**: A parameter change or an event that is not the result of an intended evolution and requires corrective or mitigative actions.

EAL Basis Reference(s):

1. NEI 99-01, Rev. 05, CU2 Example EAL #1
2. S1(S2).OP-SO.RC-0005(Q) Draining the Reactor Coolant System to ≥101 Foot Elevation

3. S1(S2).OP-SO.RVL-0001 Reactor Vessel Level Instrumentation System
4. UFSAR 5.6.5 Reactor Vessel Water Level
5. UFSAR 7.3.1.1.9 Instrumentation Used During a Loss of Coolant Accident

EAL Category: C – Cold Shutdown / Refuel System Malfunction

EAL Subcategory: 3 – RCS Level

Initiating Condition: Loss of RCS inventory

Mode Applicability: 5 - Cold Shutdown, 6 - Refueling

EAL# & Classification Level: **CA3.1 – ALERT**

EAL:

RCS level **< 97.5 ft**

Basis:

This~~ese~~ EAL~~s~~ serves as a precursor~~s~~ to a loss of ability to adequately cool the fuel. The magnitude of this loss of water indicates that makeup systems have not been effective and may not be capable of preventing further ~~RPV~~ RCS level decrease and potential core uncovery. This condition will result in a minimum emergency classification level of an ALERT.

~~EAL #1~~

~~[The BWR Low-Low ECCS Actuation Setpoint/Level 2 was chosen because it is a standard setpoint at which some available injection systems automatically start.~~ The ~~PWR Bottom ID of the~~ RCS ~~Loop S~~Level setpoint was chosen because at this level remote RCS level indication may be lost and loss of suction to decay heat removal systems ~~has occurred~~may occur. ~~The Bottom ID of the RCS Loop Setpoint should be the level equal to the bottom of the RPV loop penetration (not the low point of the loop).]~~

The inability to restore and maintain level after reaching this setpoint would be indicative of a failure of the RCS barrier.

~~EAL #2~~

~~[*In the cold shutdown mode, normal RCS level and RPV level instrumentation systems will usually be available. In the refueling mode, normal means of RPV level indication may not be available. Redundant means of RPV level indication will usually be installed (including the ability to monitor level visually) to assure that the ability to monitor level will not be interrupted. However, if all level indication were to be lost during a loss of RCS inventory event, the operators would need to determine that RPV inventory loss was occurring by observing sump and tank level changes. Sump and tank level increases must be evaluated against other potential sources of leakage such as cooling water sources inside the containment to ensure they are indicative of RCS leakage.*]~~

~~[The 15-minute duration for the loss of level indication was chosen because it is half of the CS1 Site Area Emergency EAL duration. Significant fuel damage is not expected to occur until the core has been uncovered for greater than 1 hour per the analysis referenced in the CG1 basis. Therefore this EAL meets the definition for an ALERT.]~~

If ~~RPV~~ RCS level continues to lower then escalation to SITE AREA EMERGENCY will be via EAL CS3.~~1~~2.

Explanation/Discussion/Definitions:

RCS water level is normally monitored using the instrument ranges illustrated in Attachment 2, page 10.

The centerline level of the RCS loop hot leg is at approximately 97 ft and the inside diameter of the hot leg penetration is 29 in. The bottom ID would be 97 ft – 29/2 in. or 95 ft 9.5 in. Although NEI desires a level for this threshold that is equal to the bottom of the RCS loop hot leg penetration, the RCS level indication capability does not support detection of a threshold level that low. Mid Loop Level indication is capable of monitoring level to 97.3 ft; so, a setpoint of **97.5 ft** has been selected. Local indication is also available to monitor this level. Continued inventory loss could result in a loss of suction to the RHR System. The inability to restore and maintain level after reaching loop centerline (approximately) would therefore be indicative of a failure of the RCS barrier.

EAL Basis Reference(s):

1. NEI 99-01, Rev. 05, CA1 Example EAL #1
2. S1(S2).OP-SO.RC-0005(Q) Draining the Reactor Coolant System to ≥101 Foot Elevation
3. UFSAR Figure 5.1-1 Reactor Vessel Schematic
4. S1(S2).OP-AB.RHR-0002(Q) Loss of RHR at Reduced Inventory
5. UFSAR Figure 6.3-2 & 6.3-3 Containment Sump and Drain Trench & Containment Sump Pit
6. UFSAR 6.3.2.2 Equipment and Component Description (ECCS)
7. UFSAR Figure 6.2-17 Containment Isolation Pressurizer Relief Tank Connections
8. S1(S2).OP-AB.RC-0001(Q) Reactor Coolant System Leak

EAL Category: C – Cold Shutdown / Refuel System Malfunction

EAL Subcategory: 3 – RCS Level

Initiating Condition: Loss of RCS inventory

Mode Applicability: 5 - Cold Shutdown, 6 - Refueling

EAL# & Classification Level: **CA3.2 – ALERT**

EAL:

RCS level CANNOT be monitored for **≥ 15 minutes** with a loss of RCS inventory as indicated by **ANY** unexplained RCS leakage indication, **Table C-1** (Note 3)

Note 3: The Emergency Coordinator should NOT wait until the applicable time has elapsed, but should declare the event as soon as it is determined that the condition will likely exceed the applicable time.

Table C-1 RCS Leakage Indications
• Rise in Containment sump pump run frequency • Aux Building sump level rise • PRT level rise • RWST level rise • RCDT level rise • Rise in RCS make-up rate • Observation of RCS leakage that is **UNISOLABLE**

Basis:

Thi~~ese~~ EAL~~s~~ serves as a precursor~~s~~ to a loss of ability to adequately cool the fuel. The magnitude of this loss of water indicates that makeup systems have not been effective and may not be capable of preventing further ~~RPV~~ RCS level decrease and potential core uncovery. This condition will result in a minimum emergency classification level of an ALERT.

~~EAL #1~~

~~[*The BWR* Low-Low ECCS Actuation Setpoint/Level 2 *was chosen because it is a standard setpoint at which some available injection systems automatically start. The PWR Bottom ID of the RCS Loop Setpoint was chosen because at this level remote RCS level indication may be lost and loss of suction to decay heat removal systems has occurred. The Bottom ID of the RCS Loop Setpoint should be the level equal to the bottom of the RPV loop penetration (not the low point of the loop).*]~~

~~The inability to restore and maintain level after reaching this setpoint would be indicative of a failure of the RCS barrier.~~

~~EAL #2~~

~~[~~In the C~~c~~old S~~s~~hutdown mode, normal RCS level ~~and RPV level~~ instrumentation systems will usually be available. In the R~~r~~efueling mode, normal means of ~~RPV~~ RCS level indication may not be available. Redundant means of ~~RPV~~ RCS level indication will usually be installed (including the ability to monitor level visually) to assure that the ability to monitor level will not be interrupted. However, if all level indication were to be lost during a loss of RCS inventory event, the operators would need to determine that ~~RPV~~ RCS inventory loss was occurring by observing Table C-1 indications~~sump and tank level changes~~. ~~Sump and tank level increases~~Table C-1 RCS leakage indications must be evaluated against other potential sources of leakage such as cooling water sources inside the Containment to ensure they are indicative of RCS leakage. Visual observation of leakage from systems connected to the RCS in areas inside or outside the Containment that cannot be isolated could be indicative of a loss of ~~RPV~~ RCS inventory.~~]~~

~~[~~The **15-minute** duration for the loss of level indication was chosen because it is half of the EAL ~~CS1~~ CS3.2 SITE AREA EMERGENCY ~~EAL~~ duration. Significant fuel damage is not expected to occur until the core has been uncovered for greater than 1 hour per the analysis referenced in the EAL ~~CG1~~ CG3.2 basis. Therefore this EAL meets the definition for an ALERT.~~]~~

If ~~RPV~~ RCS ~~level~~ leakage indications continue~~s~~ and RCS level cannot be monitored for 30 minutes or more, EAL CS3.2 will require ~~to lower then~~ escalation to SITE AREA EMERGENCY ~~will be via CS1~~.

Explanation/Discussion/Definitions:

In this EAL, all RCS level indication is unavailable and the RCS inventory loss must be detected by the leakage indications listed in Table C-1. Level increases must be evaluated against other potential sources of leakage (SWS, Component Cooling Water, etc.) to ensure they are indicative of RCS leakage.

In cold shutdown, the decay heat available to raise RCS temperature during a loss of inventory or heat removal event may be significantly greater than in the Refueling Mode. Entry into cold shutdown conditions may be attained within hours of operating at power or hours after refueling is completed. Entry into the Refueling Mode procedurally may not occur for typically a few days or longer after the reactor has been shutdown. Thus the heatup threat and therefore the threat to damaging the fuel clad may be lower for events that occur in the Refueling Mode with irradiated fuel in the Reactor Vessel (note that the heatup threat could be lower for cold shutdown conditions if the entry into cold shutdown was following a refueling).

Definitions:

UNISOLABLE: A breach or leak that cannot be promptly isolated from the Control Room.

EAL Basis Reference(s):

1. NEI 99-01, Rev. 05, CA1 Example EAL #2
2. S1(S2).OP-SO.RVL-0001 Reactor Vessel Level Instrumentation System
3. UFSAR 5.6.5 Reactor Vessel Water Level
4. UFSAR 7.3.1.1.9 Instrumentation Used During a Loss of Coolant Accident
5. S1(S2).OP-AB.RHR-0002(Q) Loss of RHR at Reduced Inventory
6. S1(S2).OP-SO.RC-0005(Q) Draining the Reactor Coolant System To ≥101 Foot Elevation
7. Reference drawing 208915-A-8823 Sh 1
8. UFSAR Figure 6.3-3 Containment Sump Pit
9. UFSAR 6.3.2.2 Equipment and Component Description (ECCS)
10. UFSAR Figure 6.2-17 Containment Isolation Pressurizer Relief Tank Connections
11. S1(S2).OP-AB.RC-0001(Q) Reactor Coolant System Leak

This page intentionally blank

EAL Category: C – Cold Shutdown / Refuel System Malfunction

EAL Subcategory: 3 – RCS Level

Initiating Condition: Loss of RCS inventory affecting core decay heat removal capability

Mode Applicability: 5 - Cold Shutdown, 6 - Refueling

EAL# & Classification Level: **CS3.2 – SITE AREA EMERGENCY**

EAL:

RCS level CANNOT be monitored for **≥ 30 minutes** with a loss of RCS inventory as indicated by **ANY** of the following (Note 3):

- R44A **> 5 R/hr**
- R10B **> 3500 mR/hr**
- R2 **> 104 mR/hr**
- Erratic Source Range Monitor indication
- **ANY** unexplained RCS leakage indication, **Table C-1**

Note 3: The Emergency Coordinator should NOT wait until the applicable time has elapsed, but should declare the event as soon as it is determined that the condition will likely exceed the applicable time.

Table C-1 RCS Leakage Indications
• Rise in Containment sump pump run frequency • Aux Building sump level rise • PRT level rise • RWST level rise • RCDT level rise • Rise in RCS make-up rate • Observation of RCS leakage that is **UNISOLABLE**

Basis:

Under the conditions specified by this ~~IC~~EAL, continued decrease in RCS~~/RPV~~ level is indicative of a loss of inventory control. Inventory loss may be due to an RCS breach, pressure boundary leakage, or continued boiling in the ~~RPV~~Reactor Vessel. Thus, declaration of a SITE AREA EMERGENCY is warranted.

Escalation to a GENERAL EMERGENCY is via EAL ~~CG1~~CG3.2 or EAL R~~A~~G1.1.

~~EAL #3~~

[In the cold shutdown mode, normal RCS level ~~and RPV level~~ instrumentation systems will usually be available. In the refueling mode, normal means of ~~RPV~~ RCS level indication may not be available. Redundant means of ~~RPV~~ RCS level indication will usually be installed (including the ability to monitor level visually) to assure that the ability to monitor level will not be interrupted. However, if all level indication were to be lost during a loss of RCS inventory event, the operators would need to determine that ~~RPV~~ RCS inventory loss was occurring by observing Table C-1 indications. Table C-1 RCS leakage indications~~sump and tank level changes. Sump and tank level increases~~ must be evaluated against other potential sources of leakage such as cooling water sources inside the containment to ensure they are indicative of RCS leakage.]

The **30-minute** duration allows sufficient time for actions to be performed to recover inventory control equipment.

~~As water level in the RPV lowers, the dose rate above the core will increase. The dose rate due to this core shine should result in site specific monitor indication and possible alarm.~~

~~[*This EAL should conservatively estimate a site specific dose rate setpoint indicative of core uncovery (i.e., level at TOAF). For BWRs that do not have installed radiation monitors capable of indicating core uncovery, alternate site specific level indications of core uncovery should be used.*]~~

[Post-TMI studies indicated that the installed nuclear instrumentation will operate erratically when the core is uncovered and that this should be used as a tool for making such determinations.]

Explanation/Discussion/Definitions:

This EAL applies to conditions in which the loss of decay heat removal capability has caused a significant drop in RCS water level below the bottom of the RCS hot leg penetration and core uncovery may be challenged. RCS level indication capability does not support detection of RCS levels that low and, consequently, alternate means of assessing RCS inventory loss must be used:

- As water level in the Reactor Vessel lowers, the dose rate above the core will increase. The dose rate due to this core shine should result in up-scaled general area low range containment monitor (1/2R10B & 1/2R2) and high range containment monitor (1/2R44A) indication and possible alarm. A dose rate setpoint indicative of core uncovery (i.e., level at top of active fuel) is a means to detect the onset of **IMMINENT** core damage. S-C-ZZ-MDC-2280 documents the basis for the threshold values for the R2, R10B and R44A values that indicate RCS level at or approaching the top of active fuel. Data from both Unit 1 and Unit 2 was reviewed and values rounded off to provide conservative threshold values that cover both Salem units based on how many fuel assemblies are in the Reactor Vessel and includes an appropriate reduction for radioactive decay of short lived radionuclides. As Reactor Vessel level decreases life threatening levels could exist directly above the core; with water level at top of active fuel dose rates 20 feet above the core will be in excess of 38,000 R/hr. Additionally, post-TMI studies indicated that the installed nuclear instrumentation will operate erratically when the core is uncovered and that this should be used as a tool for making such determinations. For EAL simplification, the thresholds are representative of a partially defueled core (80 fuel assemblies in the Reactor Vessel).

- Erratic source range monitor indication may be identified by:
    - Source range count rate indicators NI31B and NI32B
    - NIS Recorder NR45
    - Audio count rate
    - SPDS
    - Process Computer

- RCS inventory loss may be detected by the leakage indications listed in Table C-1. Level increases must be evaluated against other potential sources of leakage such as cooling water sources inside the Containment to ensure they are indicative of RCS leakage. Visual observation of leakage from systems connected to the RCS in areas inside or outside the Containment that cannot be isolated could be indicative of a loss of REACTOR VESSEL inventory.

Definitions:

UNISOLABLE: A breach or leak that cannot be promptly isolated from the Control Room.

IMMINENT: Mitigation actions have been ineffective, additional actions are not expected to be successful, and trended information indicates that the event or condition will occur within approximately 2 hours (unless a different time is specified).

EAL Basis Reference(s):

1. NEI 99-01, Rev. 05, CS1 Example EAL #3
2. S-C-ZZ-MDC-2280, EAL Dose Rates to Radiation Detectors Following Loss of RPV Level during Refueling Operation
3. Technical Specifications 3.3.1.1 Reactor Trip System Instrumentation
4. UFSAR Table 7.5-2 Main Control Room Indicators and/or Recorders Available to the Operator to Monitor Significant Plant Parameters During Normal Operations
5. SC.IC-CC.NIS-0011(Q) N31 Source Range
6. SC.IC-CC.NIS-0012(Q) N32 Source Range
7. S1(S2).OP-SO.RC-0005(Q) Draining the Reactor Coolant System to ≥101 Foot Elevation
8. UFSAR Figure 6.3-2 & 6.3-3 Containment Sump and Drain Trench & Containment Sump Pit
9. UFSAR 6.3.2.2 Equipment and Component Description (ECCS)
10. UFSAR Figure 6.2-17 Containment Isolation Pressurizer Relief Tank Connections
11. S1(S2).OP-AB.RC-0001(Q) Reactor Coolant System Leak

EAL Category: C – Cold Shutdown / Refuel System Malfunction

EAL Subcategory: 3 – RCS Level

Initiating Condition: Loss of RCS inventory affecting fuel clad integrity with Containment challenged

Mode Applicability: 5 - Cold Shutdown, 6 - Refueling

EAL# & Classification Level: **CG3.2 – GENERAL EMERGENCY**

EAL:

RCS level CANNOT be monitored for **≥ 30 minutes** with core uncovery indicated by **ANY** of the following (Note 3):

- R44A **> 5 R/hr**
- R10B **> 3500 mR/hr**
- R2 **> 104 mR/hr**
- Erratic Source Range Monitor indication
- **ANY** unexplained RCS leakage indication, **Table C-1**

AND

ANY Containment Challenge indication, **Table C-2**

Note 3: The Emergency Coordinator should NOT wait until the applicable time has elapsed, but should declare the event as soon as it is determined that the condition will likely exceed the applicable time.

Table C-1 RCS Leakage Indications
• Rise in Containment sump pump run frequency • Aux Building sump level rise • PRT level rise • RWST level rise • RCDT level rise • Rise in RCS make-up rate • Observation of RCS leakage that is **UNISOLABLE**

Table C-2 Containment Challenge Indications
• **CONTAINMENT CLOSURE** NOT established • Indications of **> 4% H_2** inside Containment • **UNPLANNED** rise in Containment pressure

Basis:

This ~~IC~~ EAL represents the inability to restore and maintain ~~RPV~~ RCS level to above the top of active fuel with containment challenged. Fuel damage is probable if ~~RPV~~ RCS level cannot be restored, as available decay heat will cause boiling, further reducing the ~~RPV~~ RCS level. With the C~~c~~ontainment breached or challenged then the potential for unmonitored fission product release to the environment is high. This represents a direct path for radioactive inventory to be released to the environment. This is consistent with the definition of a GENERAL EMERGENCY. The GENERAL EMERGENCY is declared on the occurrence of the loss or **IMMINENT** loss of function of all three barriers.

~~[*These EALs are based on concerns raised by Generic Letter 88-17, Loss of Decay Heat Removal, SECY 91-283, Evaluation of Shutdown and Low Power Risk Issues, NUREG-1449, Shutdown and Low-Power Operation at Commercial Nuclear Power Plants in the United States, and, NUMARC 91-06, Guidelines for Industry Actions to Assess Shutdown Management.*]~~

A number of variables can have a significant impact on heat removal capability challenging the fuel clad barrier. Examples include:

~~[*BWRs*] initial vessel level, shutdown heat removal system design~~

~~[*PWRs*]~~ mid-loop, reduced level/flange level, head in place, cavity flooded, RCS venting strategy, decay heat removal system design, vortexing pre-disposition, steam generator U-tube draining.

Analysis indicates that core damage may occur ~~within an~~as soon as one hour following continued core uncovery, therefore, **30 minutes** was conservatively chosen.

If **CONTAINMENT CLOSURE** is re-established prior to exceeding the **30 minute** core uncovery time limit then escalation to GE would not occur.

~~[*Site shutdown contingency plans typically provide for re-establishing CONTAINMENT CLOSURE following a loss of heat removal or RCS inventory functions.*]~~

~~[*In the early stages of a core uncovery event, it is unlikely that hydrogen buildup due to a core uncovery could result in an explosive mixture of dissolved gasses in Containment. However, Containment monitoring and/or sampling should be performed to verify this assumption and a General Emergency declared if it is determined that an explosive mixture exists.*]~~

~~[*For BWRs, the use of secondary containment radiation monitors should provide indication of increased release that may be indicative of a challenge to secondary containment. The site specific radiation monitor values should be based on the EOP "maximum safe values" because these values are easily recognizable and have an emergency basis.*]~~

~~EAL #2~~

Table C-1 RCS leakage indications~~Sump and tank level increases~~ must be evaluated against other potential sources of leakage such as cooling water sources inside the C~~c~~ontainment to ensure they are indicative of RCS leakage.

~~[~~In the C~~c~~old S~~s~~hutdown mode, normal RCS level ~~and RPV level~~ instrumentation systems will usually be available. In the R~~r~~efueling mode, normal means of ~~RPV~~ RCS level indication may not be available. Redundant means of ~~RPV~~ RCS level indication will usually be installed (including the ability to monitor level visually) to assure that the ability to monitor level will not be interrupted. However, if all level indication were to be lost during a loss of RCS inventory event, the operators would need to determine that ~~RPV~~ RCS inventory loss was occurring by observing Table C-1 indications. Table C-1 RCS leakage indications~~sump and tank level changes. Sump and tank level increases~~ must be evaluated against other potential sources of leakage such as cooling water sources inside the C~~c~~ontainment to ensure they are indicative of RCS leakage.~~]~~

~~As water level in the RPV lowers, the dose rate above the core will increase. The dose rate due to this core shine should result in site specific monitor indication and possible alarm.~~

~~[*This EAL should conservatively estimate a site specific dose rate setpoint indicative of core uncovery (ie., level at TOAF). For BWRs that do not have installed radiation monitors capable*~~

~~of indicating core uncovery, alternate site specific level indications of core uncovery should be used.~~]

[Post-TMI studies indicated that the installed nuclear instrumentation will operate erratically when the core is uncovered and that this should be used as a tool for making such determinations.]

Explanation/Discussion/Definitions:

This EAL applies to conditions in which a significant drop in Reactor Vessel water level below the RCS hot leg penetration has occurred with prolonged core uncovery. RCS level indication capability does not support detection of RCS levels that low and, consequently, alternate means of assessing RCS inventory loss must be used:

- As water level in the Reactor Vessel lowers, the dose rate above the core will increase. The dose rate due to this core shine should result in up-scaled general area low range containment monitor (1/2R10B & 1/2R2) and high range containment monitor (1/2R44A) indication and possible alarm. A dose rate setpoint indicative of core uncovery (i.e., level at top of active fuel) is a means to detect the onset of **IMMINENT** core damage. S-C-ZZ-MDC-2280 documents the basis for the threshold values for the R2, R10B and R44A values that indicate RCS level at or approaching the top of active fuel. Data from both Unit 1 and Unit 2 was reviewed and values rounded off to provide conservative threshold values that cover both Salem units based on how many fuel assemblies are in the Reactor Vessel and includes an appropriate reduction for radioactive decay of short lived radionuclides. As Reactor Vessel level decreases life threatening levels could exist directly above the core; with water level at top of active fuel dose rates 20 feet above the core will be in excess of 38,000 R/hr. Additionally, post-TMI studies indicated that the installed nuclear instrumentation will operate erratically when the core is uncovered and that this should be used as a tool for making such determinations. For EAL simplification, the thresholds are representative of a partially defueled core (80 fuel assemblies in the Reactor Vessel).

- Erratic source range monitor indication may be identified by:
    - Source range count rate indicators NI31B and NI32B
    - NIS Recorder NR45
    - Audio count rate
    - SPDS
    - Process Computer

- RCS inventory loss may be detected by the leakage indications listed in Table C-1. Level increases must be evaluated against other potential sources of leakage such as

cooling water sources inside the Containment to ensure they are indicative of RCS leakage. Visual observation of leakage from systems connected to the RCS in areas inside or outside the Containment that cannot be isolated could be indicative of a loss of RCS inventory.

Three conditions are associated with a challenge to Containment:

- The status of **CONTAINMENT CLOSURE** indicates the ability to rely on the Containment as a barrier to fission product release.
- When hydrogen concentration in the Containment atmosphere exceeds 4%, the possibility of an explosive mixture exists inside Containment. Elevated Containment atmosphere hydrogen concentration is alarmed at ≥ 2% by overhead annunciator C-23, CNTMT H_2 LVL HI
- An **UNPLANNED** rise in Containment pressure in the Cold Shutdown or Refueling Mode may signify an energy addition to the Containment such that the Containment cannot be relied upon as a barrier to fission product release.

Definitions:

UNISOLABLE: A breach or leak that cannot be promptly isolated from the Control Room.

CONTAINMENT CLOSURE: Is the Salem procedurally defined action taken to secure containment and its associated structures, systems, and components as a functional barrier to fission product release under existing plant conditions. **CONTAINMENT CLOSURE** status is checked and verified using S1(S2).OP-AB.CONT-0001(Q).

UNPLANNED: A parameter change or an event that is not the result of an intended evolution and requires corrective or mitigative actions.

IMMINENT: Mitigation actions have been ineffective, additional actions are not expected to be successful, and trended information indicates that the event or condition will occur within approximately 2 hours (unless a different time is specified).

EAL Basis Reference(s):

1. NEI 99-01, Rev. 05, CG1 Example EAL #2
2. OU-AA-103 Shutdown Safety Management Program
3. S1(S2).OP-AB.CONT-0001(Q) Containment Closure
4. S-C-ZZ-MDC-2280, EAL Dose Rates to Radiation Detectors Following Loss of RPV Level during Refueling Operation
5. Technical Specifications 3.3.1.1 Reactor Trip System Instrumentation
6. UFSAR Table 7.5-2 Main Control Room Indicators and/or Recorders Available to the Operator to Monitor Significant Plant Parameters During Normal Operations

7. SC.IC-CC.NIS-0011(Q) N31 Source Range
8. SC.IC-CC.NIS-0012(Q) N32 Source Range
9. S1(S2).OP-SO.RC-0005(Q) Draining the Reactor Coolant System to ≥101 Foot Elevation
10. UFSAR Figure 6.3-2 & 6.3-3 Containment Sump and Drain Trench & Containment Sump Pit
11. UFSAR 6.3.2.2 Equipment and Component Description (ECCS)
12. UFSAR Figure 6.2-17 Containment Isolation Pressurizer Relief Tank Connections
13. S1(S2).OP-AB.RC-0001(Q) Reactor Coolant System Leak
14. 1(2)-EOP-FRCC-1 Response to Inadequate Core Cooling – Basis Document (pg 16)
15. Salem EOP Setpoint Basis Document - Vendor Doc. #320832
16. S1(S2).OP-AR.ZZ-0003(Q) OHA C-23, CNTMT H_2 LVL HI

This page intentionally blank

EAL Category: C – Cold Shutdown / Refuel System Malfunction

EAL Subcategory: 4 – RCS Temperature

Initiating Condition: **UNPLANNED** loss of decay heat removal capability with irradiated fuel in the Reactor Vessel

Mode Applicability: 5 - Cold Shutdown, 6 - Refueling

EAL# & Classification Level: **CU4.1 – UNUSUAL EVENT**

EAL:

An **UNPLANNED** Loss of Decay Heat Removal functions

AND

RCS Temperature has risen to **> 200°F**

Basis:

This ~~IC~~ EAL is ~~be~~ a precursor of more serious conditions and, as a result, is considered to be a potential degradation of the level of safety of the plant. In cold shutdown, the ability to remove decay heat relies primarily on forced cooling flow. Operation of the systems that provide this forced cooling may be jeopardized due to the unlikely loss of electrical power or RCS inventory. Since the RCS usually remains intact in the C~~c~~old S~~s~~hutdown mode a large inventory of water is available to keep the core covered.

~~[*Entry into cold shutdown conditions may be attained within hours of operating at power. Entry into the refueling mode procedurally may not occur for typically 100 hours (site specific) or longer after the reactor has been shutdown. Thus the heatup threat and therefore the threat to damaging the fuel clad may be lower for events that occur in the refueling mode with irradiated fuel in the RPV (note that the heatup threat could be lower for cold shutdown conditions if the entry into cold shutdown was following a refueling). In addition, the operators should be able to monitor RCS temperature and RPV level so that escalation to the alert level via CA4 or CA1 will occur if required.*]~~

During refueling, the level in the ~~RPV~~ Reactor Vessel will normally be maintained above the Reactor Vessel ~~RPV~~ flange. Refueling evolutions that decrease water level below the Reactor Vessel ~~RPV~~ flange are carefully planned and procedurally controlled. Loss of forced decay heat removal at reduced inventory may result in more rapid increases in RCS~~/RPV~~ temperatures depending on the time since shutdown.

~~[*Unlike the cold shutdown mode,*] normal means of core temperature indication and RCS level indication may not be available in the refueling mode. Redundant means of RPV level~~

~~indication are therefore procedurally installed to assure that the ability to monitor level will not be interrupted. However, if all level and temperature indication were to be lost in either the cold shutdown of refueling modes, EAL 2 would result in declaration of a NOUE if both temperature and level indication cannot be restored within 15 minutes from the loss of both means of indication.~~ Escalation to ALERT would be via EAL CA3.1 based on an inventory loss or EAL CA4.1 based on exceeding its temperature criteria.

Explanation/Discussion/Definitions:

The Technical Specification cold shutdown temperature limit is **200°F.**

RCS coolant temperature may be indicated by the following instrumentation:

- Core exit TCs (computer points T0031A, T0022A, T0046A, T0014A)
- Hot Leg temperatures (computer points T0419A, T0439A, T0459A, T0479A)
- RHR HX inlet temperatures (computer points T0630A and T0631A) ~~temperatures~~
- RHR HX outlet temperatures (T0627A, T2360A)
- RCS cold leg temperatures (T0406A, T0426A, T0446A, T0466A)

Definitions:

> **UNPLANNED**: A parameter change or an event that is not the result of an intended evolution and requires corrective or mitigative actions.

EAL Bases Reference(s):

1. NEI 99-01, Rev. 05, CU4 Example EAL #1
2. SGS Technical Specifications Table 1.1, Operational Modes
3. 1(2)OP-AB.RHR-0001(Q) Loss of RHR
4. 1(2)OP-AB.RHR-0002(Q) Loss of RHR at Reduced Inventory
5. SC.OP-DL.ZZ-0011(Q) Reactor Coolant System Heatup/Cooldown Log

EAL Category: C – Cold Shutdown / Refuel System Malfunction

EAL Subcategory: 4 – RCS Temperature

Initiating Condition: **UNPLANNED** loss of decay heat removal capability with irradiated fuel in the Reactor Vessel

Mode Applicability: 5 - Cold Shutdown, 6 - Refueling

EAL# & Classification Level: **CU4.2 – UNUSUAL EVENT**

EAL:

An **UNPLANNED** Loss of Decay Heat Removal functions

AND

Loss of **BOTH** of the following:

- **All** RCS Temperature indication
- **All** RCS level indication

AND

≥ 15 minutes have elapsed (Note 3)

Note 3: The Emergency Coordinator should NOT wait until the applicable time has elapsed, but should declare the event as soon as it is determined that the condition will likely exceed the applicable time.

Basis:

This ~~IC~~ EAL is be a precursor of more serious conditions and, as a result, is considered to be a potential degradation of the level of safety of the plant. In cold shutdown, the ability to remove decay heat relies primarily on forced cooling flow. Operation of the systems that provide this forced cooling may be jeopardized due to the unlikely loss of electrical power or RCS inventory. Since the RCS usually remains intact in the Cold Shutdown mode a large inventory of water is available to keep the core covered.

~~[*Entry into cold shutdown conditions may be attained within hours of operating at power. Entry into the refueling mode procedurally may not occur for typically 100 hours (site specific) or longer after the reactor has been shutdown. Thus the heatup threat and therefore the threat to damaging the fuel clad may be lower for events that occur in the refueling mode with irradiated fuel in the RPV (note that the heatup threat could be lower for cold shutdown*~~

~~*conditions if the entry into cold shutdown was following a refueling). In addition, the operators should be able to monitor RCS temperature and RPV level so that escalation to the alert level via CA4 or CA1 will occur if required.*~~]

During refueling, the level in the ~~RPV~~ RCS will normally be maintained above the ~~RPV~~ Reactor Vessel flange. Refueling evolutions that decrease water level below the Reactor Vessel ~~RPV~~ flange are carefully planned and procedurally controlled. Loss of forced decay heat removal at reduced inventory may result in more rapid increases in RCS/~~RPV~~ temperatures depending on the time since shutdown.

~~[*Unlike the cold shutdown mode,*] n~~Normal means of ~~core~~ RCS temperature indication and RCS level indication may not be available in the refueling mode. Redundant means of ~~RPV~~ RCS level indication are therefore procedurally installed to assure that the ability to monitor level will not be interrupted. However, if all level and temperature indication were to be lost in either the C~~c~~old S~~s~~hutdown of R~~r~~efueling modes, this EAL ~~2~~ would result in declaration of a ~~N~~OUE if both temperature and level indication cannot be restored within **15 minutes** from the loss of both means of indication. Escalation to ALERT would be via EAL CA3.1 based on an inventory loss or EAL CA4.1 based on exceeding its temperature criteria.

Explanation/Discussion/Definitions:

RCS water level is normally monitored using the instrument ranges in Attachment 2, page 10.

During refueling, the reactor head and associated RVLIS piping are removed. Visual observation by personnel on the refuel floor in communication with the Control Room may also provide indication of refueling cavity water level and RCS water level.

RCS coolant temperature may be indicated by the following instrumentation:

- Core exit TCs (computer points T0031A, T0022A, T0046A, T0014A)
- Hot Leg temperatures (computer points T0419A, T0439A, T0459A, T0479A)
- RHR HX inlet temperatures (computer points T0630A and T0631A) ~~temperatures~~
- RHR HX outlet temperatures (T0627A, T2360A)
- RCS cold leg temperatures (T0406A, T0426A, T0446A, T0466A)

Definitions:

> **UNPLANNED**: A parameter change or an event that is not the result of an intended evolution and requires corrective or mitigative actions.

EAL Bases Reference(s):

1. NEI 99-01, Rev. 05, CU4 Example EAL #2
2. S1(S2).OP-SO.RC-0005(Q) Draining the Reactor Coolant System to > 100 Foot Elevation
3. S1(S2).OP-SO.RVL-0001 Reactor Vessel Level Instrumentation System
4. UFSAR 5.6.5 Reactor Vessel Water Level

5. UFSAR 7.3.1.1.9 Instrumentation Used During a Loss of Coolant Accident (LOCA)
6. 1(2)OP-AB.RHR-0001(Q) Loss of RHR
7. 1(2)OP-AB.RHR-0002(Q) Loss of RHR at Reduced Inventory
8. SC.OP-DL.ZZ-0011(Q) Reactor Coolant System Heatup/Cooldown Log

EAL Category: C – Cold Shutdown / Refuel System Malfunction

EAL Subcategory: 4 – RCS Temperature

Initiating Condition: Inability to maintain plant in cold shutdown

Mode Applicability: 5 - Cold Shutdown, 6 - Refueling

EAL# & Classification Level: **CA4.1 – ALERT**

EAL:

An **UNPLANNED** event results in RCS temperature **> 200°F** for **> Table C-3** duration

OR

An **UNPLANNED** event results in RCS pressure increase **> 10 psig** due to a loss of RCS cooling (this portion of the EAL does NOT apply in Solid Plant conditions)

Table C-3 RCS Heatup Duration Thresholds

RCS Integrity	CONTAINMENT CLOSURE	Duration Threshold
Intact **AND** NOT in reduced inventory status	NOT Applicable	60 minutes **
NOT Intact **OR** RCS is in a reduced inventory status	Established	20 minutes **
	NOT Established	0 minutes

** IF a Decay Heat Removal System is placed in operation within the duration threshold and RCS Temperature is lowering, THEN this EAL is NOT Applicable

Basis:

~~For EAL 1,~~ 1st Condition

T~~t~~he RCS ~~Reheat~~ Heatup Duration Threshold table addresses complete loss of functions required for core cooling for greater than 60 minutes during R~~r~~efueling and C~~c~~old S~~s~~hutdown modes when RCS integrity is established. [RCS integrity should be considered to be in place when the RCS pressure boundary is in its normal condition for the cold shutdown mode of operation (e.g., no freeze seals or nozzle dams). The status of **CONTAINMENT CLOSURE** in this condition is immaterial given that the RCS is providing a high pressure barrier to fission product release to the environment.] The 60 minute time frame should allow sufficient time to restore cooling without ~~there being~~ a substantial degradation in plant safety.

The RCS Heatup~~Reheat~~ Duration Threshold table also addresses the complete loss of functions required for core cooling for greater than 20 minutes during R~~r~~efueling and C~~c~~old S~~s~~hutdown modes when **CONTAINMENT CLOSURE** is established but RCS integrity is not established or RCS inventory is reduced [(e.g., mid-loop operation in PWRs)]. ~~*[As discussed above, RCS integrity should be assumed to be in place when the RCS pressure boundary is in its normal condition for the cold shutdown mode of operation (e.g., no freeze seals or nozzle dams).]*~~ The allowed 20 minute time frame was included to allow operator action to restore the heat removal function, if possible. ~~[*The allowed time frame is consistent with the guidance provided by Generic Letter 88-17, "Loss of Decay Heat Removal" (discussed later in this basis) and is believed to be conservative given that a low pressure Containment barrier to fission product release is established.*]~~

Finally, complete loss of functions required for core cooling during R~~r~~efueling and C~~c~~old S~~s~~hutdown modes when neither **CONTAINMENT CLOSURE** nor RCS integrity are established. [RCS integrity is in place when the RCS pressure boundary is in its normal condition for the cold shutdown mode of operation (e.g., no freeze seals or nozzle dams). No delay time is allowed because the evaporated reactor coolant that may be released into the Containment during this heatup condition could also be directly released to the environment.]

The note (**) in Table C-3 indicates that this EAL is not applicable if actions are successful in restoring a~~n~~ ~~RCS~~ decay heat removal system to operation and RCS temperature is being reduced within the specified time frame.

~~In EAL 2, t~~2nd Condition

The **10 psig** pressure increase addresses situations where, due to high decay heat loads, the time provided to restore temperature control, should be less than 60 minutes. The RCS pressure setpoint chosen should be **10 psig** or the lowest pressure that the site can read on installed Control Board instrumentation that is equal to or greater than **10 psig**.

Escalation to SITE AREA EMERGENCY would be via EAL ~~CS1EAL~~ CS3.2 should boiling result in significant ~~RPV~~ RCS level loss leading to core uncovery.

~~[*For PWRs, this IC and its associated EALs are based on concerns raised by Generic Letter 88-17, "Loss of Decay Heat Removal." A number of phenomena such as pressurization, vortexing, steam generator U-tube draining, RCS level differences when operating at a mid-loop condition, decay heat removal system design, and level instrumentation problems can lead to conditions where decay heat removal is lost and core uncovery can occur. NRC analyses show that there are sequences that can cause core uncovery in 15 to 20 minutes and severe core damage within an hour after decay heat removal is lost.*]~~

A loss of Technical Specification components alone is not intended to constitute an ALERT. The same is true of a momentary unplanned excursion above the Technical Specification cold shutdown temperature limit when the heat removal function is available.

The ~~Emergency Director~~Emergency Coordinator must remain alert to events or conditions that lead to the conclusion that exceeding the EAL is **IMMINENT**. If, in the judgment of the ~~Emergency Director~~Emergency Coordinator, an **IMMINENT** situation is at hand, the classification should be made as if the threshold has been exceeded.

Explanation/Discussion/Definitions:

200°F is the Technical Specification cold shutdown temperature limit.

10 psig is one-half of the **20 psig** minor division on 1(2)PI-403. This instrument has a range of 0 to 600 psig. This RCS pressure indication is also displayed on SPDS Point U1(2)PT0403S and P250 Computer Point P0499A.

"Intact" is defined as all RCS penetrations between the core and Containment atmosphere are isolated, and a minimum of two RCS loops with U-tubes not drained and their associated Steam Generators are available as heat sinks for natural circulation. "Available as Heat Sinks" indicates each associated Steam Generator has a feed makeup source available, secondary water level is above the U-tubes, and a Steam Generator vent path exists.

A "Reduced Inventory" condition exists when Reactor Vessel level is less than 101 ft.

RCS coolant temperature may be indicated by the following instrumentation:

- Core exit TCs (computer points T0031A, T0022A, T0046A, T0014A)
- Hot Leg temperatures (computer points T0419A, T0439A, T0459A, T0479A)
- RHR HX inlet temperatures (computer points T0630A and T0631A) ~~temperatures~~
- RHR HX outlet temperatures (T0627A, T2360A)
- RCS cold leg temperatures (T0406A, T0426A, T0446A, T0466A)

Definitions:

> **UNPLANNED**: A parameter change or an event that is not the result of an intended evolution and requires corrective or mitigative actions.

CONTAINMENT CLOSURE: Is the Salem procedurally defined action taken to secure containment and its associated structures, systems, and components as a functional barrier to fission product release under existing plant conditions. **CONTAINMENT CLOSURE** status is checked and verified using S1(S2).OP-AB.CONT-0001(Q).

IMMINENT: Mitigation actions have been ineffective, additional actions are not expected to be successful, and trended information indicates that the event or condition will occur within approximately 2 hours (unless a different time is specified).

EAL Bases Reference(s):

1. NEI 99-01, Rev. 05, CA4 Example EAL #1 & #2
2. OU-AA-103 Shutdown Safety Management Program
3. S1(S2).OP-AB.CONT-0001(Q) Containment Closure
4. S1(S2).OP-ST.CAN-0007(Q) Refueling Operations - Containment Closure
5. SGS Technical Specifications Table 1.1 Operational Modes
6. S1(S2).IC-CC.RCP-0070(Q) 1(2)PT-403 Reactor Coolant System Hot Leg Pressure Channel II
7. S1(S2).OP-SO.RC-0005(Q) Draining The Reactor Coolant System To ≥101 Foot Elevation
8. UFSAR 5.6.5 Reactor Vessel Water Level
9. S1(S2).OP-SO.RVL-0001 Reactor Vessel Level Instrumentation System, Note pg 16
10. 1(2)OP-AB.RHR-0001(Q) Loss of RHR
11. 1(2)OP-AB.RHR-0002(Q) Loss of RHR at Reduced Inventory
12. SC.OP-DL.ZZ-0011(Q) Reactor Coolant System Heatup/Cooldown Log

EAL Category: C – Cold Shutdown / Refuel System Malfunction

EAL Subcategory: 5 – Communications

Initiating Condition: Loss of all onsite or offsite communications capabilities

Mode Applicability: 5 - Cold Shutdown, 6 - Refueling, D - Defueled

EAL# & Classification Level: **CU5.1 – UNUSUAL EVENT**

EAL:

Loss of **all Table C-4** Onsite communication methods affecting the ability to perform routine operations

OR

Loss of **all Table C-4** Offsite communication methods affecting the ability to perform offsite notifications

Table C-4 Communications Systems		
System	**Onsite**	**Offsite**
Direct Inward Dial System (DID)	X	X
Station Page System (Gaitronics)	X	
Station Radio System	X	
Nuclear Emergency Telephone System (NETS)		X
Centrex Phone System (ESSX)		X
NRC (ENS)		X

Basis:

The purpose of this ~~IC~~ EAL ~~and its associated EALs~~ is to recognize a loss of communications capability that either defeats the plant operations staff ability to perform routine tasks necessary for plant operations or the ability to communicate issues with off-site authorities. The loss of off-site communications ability is expected to be significantly more comprehensive than the condition addressed by 10 CFR 50.72.

The availability of one method of ordinary off-site communications is sufficient to inform federal, state, and local authorities of plant issues. This EAL is intended to be used only when extraordinary means (e.g., relaying of information from radio transmissions, individuals being sent to off-site locations, etc.) are being utilized to make communications possible.

Explanation/Discussion/Definitions:

Onsite and Offsite global communications include one or more of the systems listed in Table C-4.

Direct Inward Dial System (DID)

Direct Inward Dial (DID) system is named for the dominant feature of the commercial telephone service provided by the local telephone company for the site. DID allows station telephones to be extensions or tied lines of the same systems. These exchanges can take advantage of backup power supplies provided to the stations, and may use either PSEG microwave, commercial telephone system microwave, or buried cable transmission systems to maintain external communications. This commercial telephone service is available as an additional backup for the NETS and Centrex/ESSX 1 system.

Station Page System (Gaitronics)

Gaitronics is a completely transistorized voice communication system with five voice channels: one page and five party. The system is designed for use in extreme environmental conditions such as dust, moisture, heat and noise. The system consists of handsets, speakers and their associated amplifiers. The power for this system is 120 volts AC from an inverted DC source to provide reliable communications during an emergency.

Station Radio System

The Operations and Fire Protection Department UHF radio system is a multi-frequency system used routinely by both station Operations Departments and the Fire Protection Department. When an emergency event is declared, these radio frequencies serve both station Operations Support Centers (OSC).

Nuclear Emergency Telephone System (NETS)

The Nuclear Emergency Telecommunications System (NETS) is a privately controlled, self-contained telephone exchange that operates as a closed system, not accessible from other phone exchanges. This feature allows the system to be dedicated to emergency response use. The system may use PSEG microwave, commercial telephone system microwave, fiber optics, or buried cable transmission as needed. The exchange switching equipment is maintained at the Environmental & Energy Resource Center (EERC). As an independent system with an uninterruptible power supply, it may operate with or without local phone service or external power.

Centrex Phone System (ESSX)

The Centrex/Electronic Switch System Exchange 1(Centrex/ESSX 1) is also a privately controlled exchange, which PSEG operates with its own microwave signal system. This system is also independent of local phone service, since each circuit is independently wired. The microwave signal is generated from corporate facilities in Newark, NJ, separated from any local effects of weather or telephone use. The exchange is accessible from other exchanges, but circuits are located only in PSEG facilities. It is considered the primary backup for the NETS system.

NRC (ENS)

The Emergency Notification System (ENS) is a dedicated communications system with the NRC, which is part of the Federal Telecommunications System (FTS) and consists of direct lines to the NRC. FTS lines are used to provide general accident information. These telephones are installed in the Control Room, TSC, and the EOF.

This EAL is the cold condition equivalent of the hot condition EAL SU6.1.

EAL Bases Reference(s):

1. NEI 99-01, Rev. 05, CU6 Example EAL #1 and 2
2. PSEG Nuclear Emergency Plan, Section 7 Communications
3. UFSAR 9.5.2 Communications System

This page intentionally blank

EAL Category: C – Cold Shutdown / Refuel System Malfunction

EAL Subcategory: 6 – Inadvertent Criticality

Initiating Condition: Inadvertent Criticality

Mode Applicability: 5 - Cold Shutdown, 6 - Refueling

EAL# & Classification Level: **CU6.1 – UNUSUAL EVENT**

EAL:

UNPLANNED sustained positive startup rate observed on nuclear instrumentation

Basis:

This ~~IC~~ EAL addresses criticality events that occur in Cold Shutdown or Refueling modes ~~[(NUREG 1449, Shutdown and Low-Power Operation at Commercial Nuclear Power Plants in the United States)]~~ such as fuel mis-loading events. ~~and inadvertent dilution events.~~ This ~~IC~~ EAL indicates a potential degradation of the level of safety of the plant, warranting a ~~N~~OUE classification.

~~[This condition can be identified using period monitors/startup rate monitor. The term "sustained" is used in order to allow exclusion of expected short term positive periods/startup rates from planned fuel bundle or control rod movements during core alteration for PWRs and BWRs. These short term positive periods/startup rates are the result of the increase in neutron population due to subcritical multiplication.]~~

Escalation would be by ~~Emergency Director~~Emergency Coordinator Judgment.

Explanation/Discussion/Definitions:

The term "sustained" is used in order to allow exclusion of expected short term positive startup rates from planned fuel bundle or control rod movements during core alteration. These short term positive startup rates are the result of the increase in neutron population due to subcritical multiplication.

Positive reactor startup rate may be identified by:

- Source range startup rate indicators NI31D and NI32D
- NIS Recorder NR45
- Audio count rate
- SPDS
- Process Computer

This EAL is the cold condition equivalent of the hot condition EAL SU3.1.

Definitions:

UNPLANNED: A parameter change or an event that is not the result of an intended evolution and requires corrective or mitigative actions.

EAL Bases Reference(s):

1. NEI 99-01, Rev. 05, CU8 Example EAL #1
2. Technical Specifications 3.3.1.1 Reactor Trip System Instrumentation
3. UFSAR Table 7.5-2 Main Control Room Indicators
4. SC.IC-CC.NIS-0011(Q) N31 Source Range
5. SC.IC-CC.NIS-0012(Q) N32 Source Range

EAL

Attachments

(Support Materials)

Attachment 1 – Use of Fission Product Barrier Table

Mode Applicability: 1 - Power Operations, 2 - Startup, 3 - Hot Standby, 4 - Hot Shutdown

A point system is used to determine the Emergency Classification Level based on the Fission Product Barrier Table. Each Fission Product Barrier Loss and Potential Loss threshold is assigned a point value as noted below.

Perform the following:

1. Review all columns of the Fission Product Barrier Table and identify which need further review.
2. For each of the three barriers, determine the EAL with the highest point value. No more than one EAL should be selected for each barrier.
3. Add the point values for the three barriers.
4. Classify based on the point value sum as follows:

If the sum is:	Classify as:	EAL	ECG Att#
2, 3	UNUSUAL EVENT	**ANY** loss or **ANY** potential loss of Containment	**1**
4, 5	ALERT	**ANY** loss or **ANY** potential loss of either Fuel Clad or RCS	**2**
6 - 11	SITE AREA EMERGENCY	Loss or potential loss of **ANY** two barriers **OR** Potential loss of 2 barriers with the loss of the 3rd barrier	**3**
12, 13	GENERAL EMERGENCY	Loss of **ANY** two barriers **AND** Loss or potential loss of third barrier	**4**

5. Implement the appropriate ECG Attachment.
6. Continue to review the Fission Product Barrier Table for changes that could result in emergency escalation or de-escalation.

Attachment 2 – EAL Basis Figures

Figures referenced in the basis discussions of the EALs are listed in this Attachment.

Title	Page No.
AC Power Distribution	2
CFST – Core Cooling	4
CFST – Shutdown Margin	5
CFST – Heat Sink	6
CFST – Thermal Shock	7
Thermal Shock Limit A Curve	8
CFST – Containment Environment	9
RCS Level Instrument Ranges	10

AC Power Distribution

The 500-kV switching station is connected to three 500-kV transmission lines. Two transmission lines go north to two major switching stations: PSE&G New Freedom Switching Station and Atlantic City Electric's Orchard Switching Station. The New Freedom Switching Station is connected to the PSE&G 230-kV bulk power system via four 500/230-kV autotransformers. Orchard Switching Station is also connected to Atlantic City Electric's 230-kV bulk power system via a 500/230-kV autotransformer. In addition, it is connected to the Pennsylvania / New Jersey / Maryland 500-kV interconnected system. The third transmission line serves as a tie line to the adjacent Hope Creek 500-kV switchyard line which is also integrated into the Pennsylvania / New Jersey / Maryland 500-kV interconnected system.

The 500-13 kV station power transformers are connected to different bus sections of the 500-kV switching station:

- 13-kV north ring bus: Each 500-13 kV transformer T1 and T2 feeds two (one for each unit) 13-4 kV station power transformers T11, T21 and T12, T22 associated with group buses.

- 13kV south bus: Each 500-13kV transformer T3 and T4 respectively and feeds two (one for each unit) 13 4kV station power transformers T13, T24 and T14, T23 associated with vital buses and circulating water switchgear. The 13-4kV station power transformers T13 and T14 (Unit 1) share the loads of three vital buses and two CW bus sections while T21 and T22 (Unit 2) share the loads of three vital buses and two CW bus sections.

The onsite power sources for each unit consists of the main generator, the emergency diesel generators (one for each vital bus), and the Unit 3 40-MW gas turbine generator (one for both units). Any two EDGs and their associated vital buses can supply sufficient power for operation of the required safeguards equipment for a design basis LOCA coincident with a loss of offsite power. For the purposes of the EAL, availability of EDGs that have not been challenged to start during degradation of AC power sources to the 4KV vital buses should be based on meeting Technical Specification action requirements for loss of offsite AC power sources. The gas turbine generator can be manually started and paralleled with normal sources of plant startup or standby power but is normally used for peaking purposes. Procedure AB.LOOP-0001(Q) provides guidance to use the gas turbine to energize a 13KV ring bus during a blackout if necessary. The gas turbine generator is not controlled by technical specifications, however, and for classification purposes under this EAL cannot be credited as a power source for the 4KV vital buses.

Figures

AC Power Distribution (cont'd)

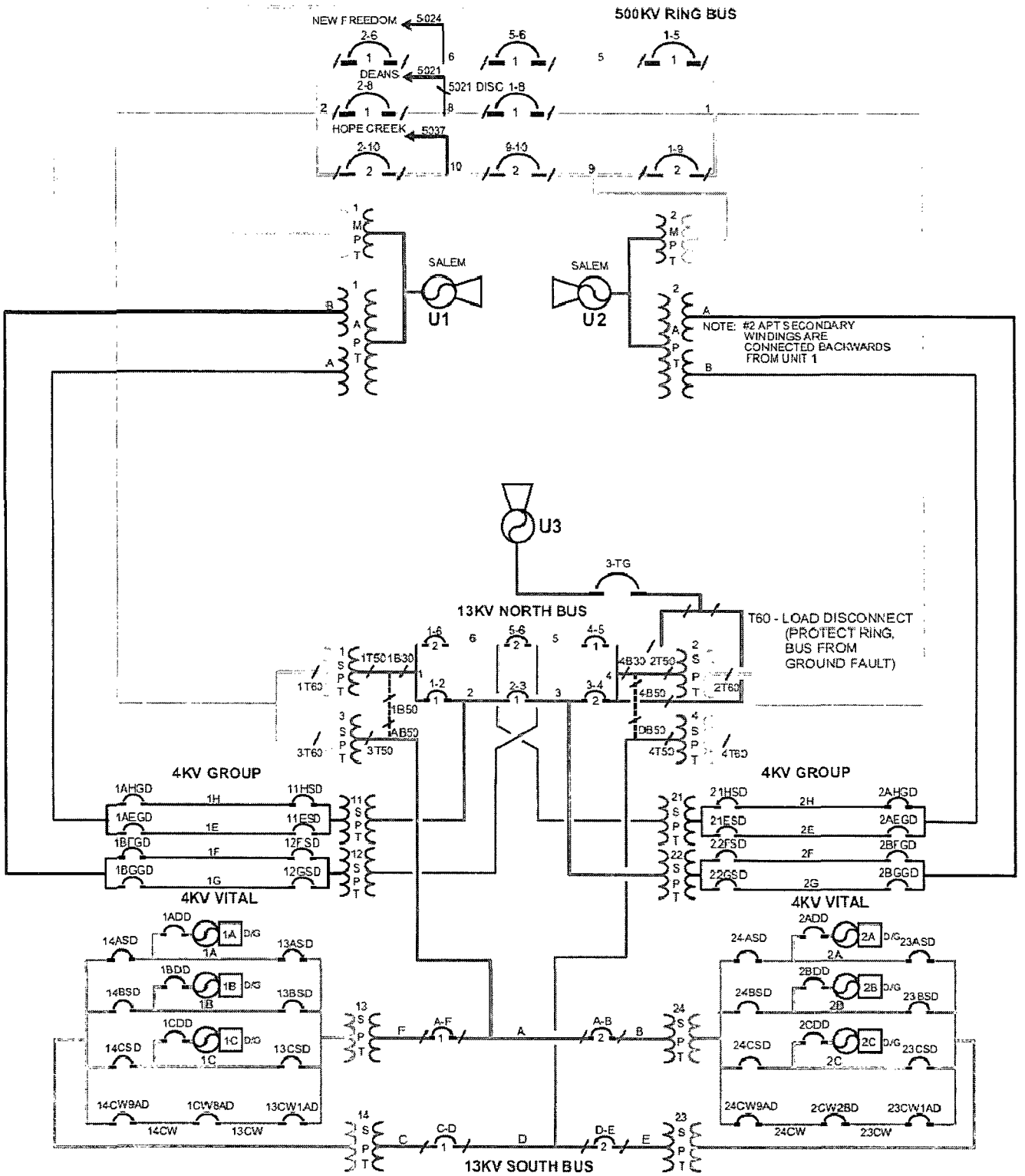

Figures

CFST – Core Cooling

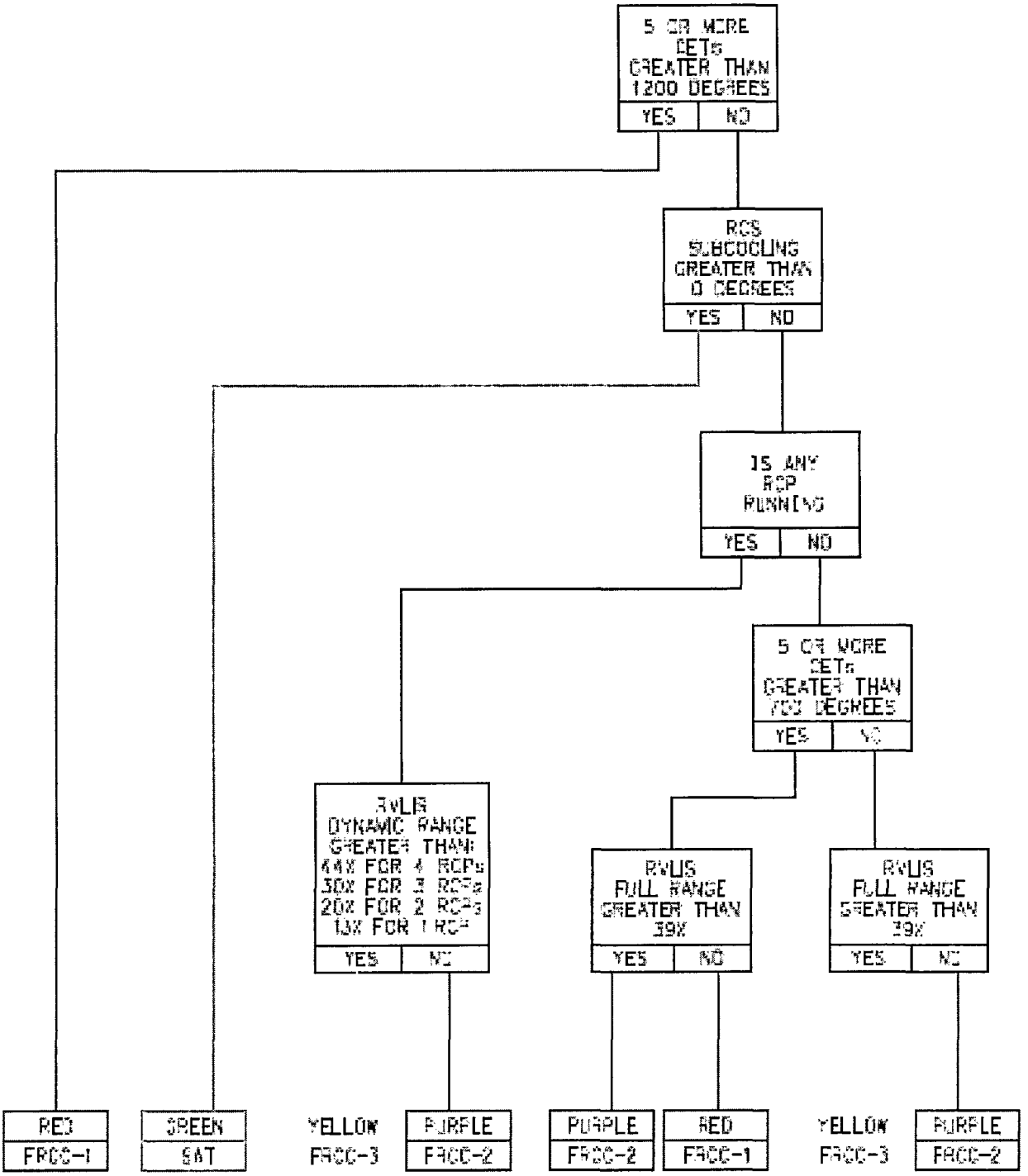

CFST – Shutdown Margin

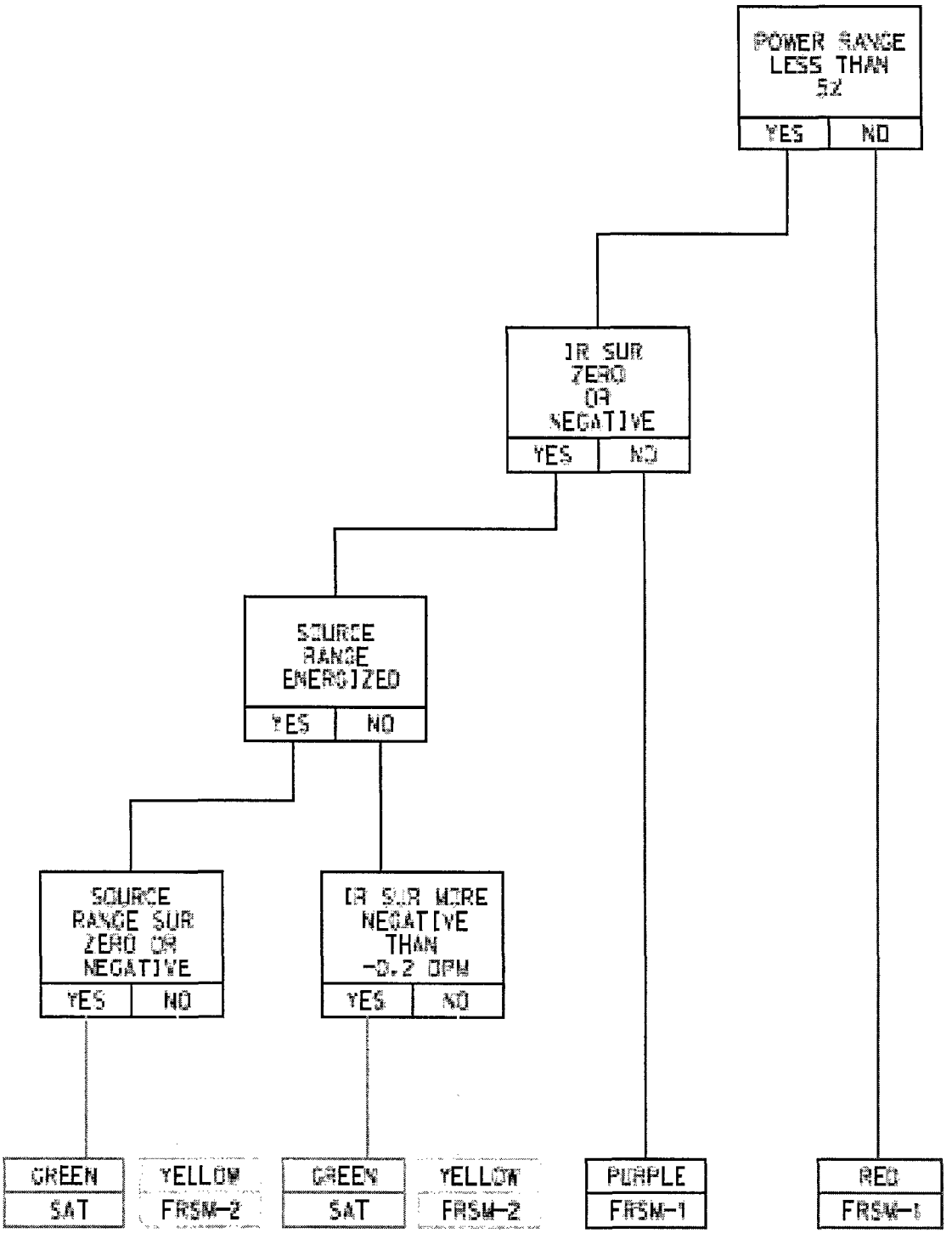

Figures

CFST – Heat Sink

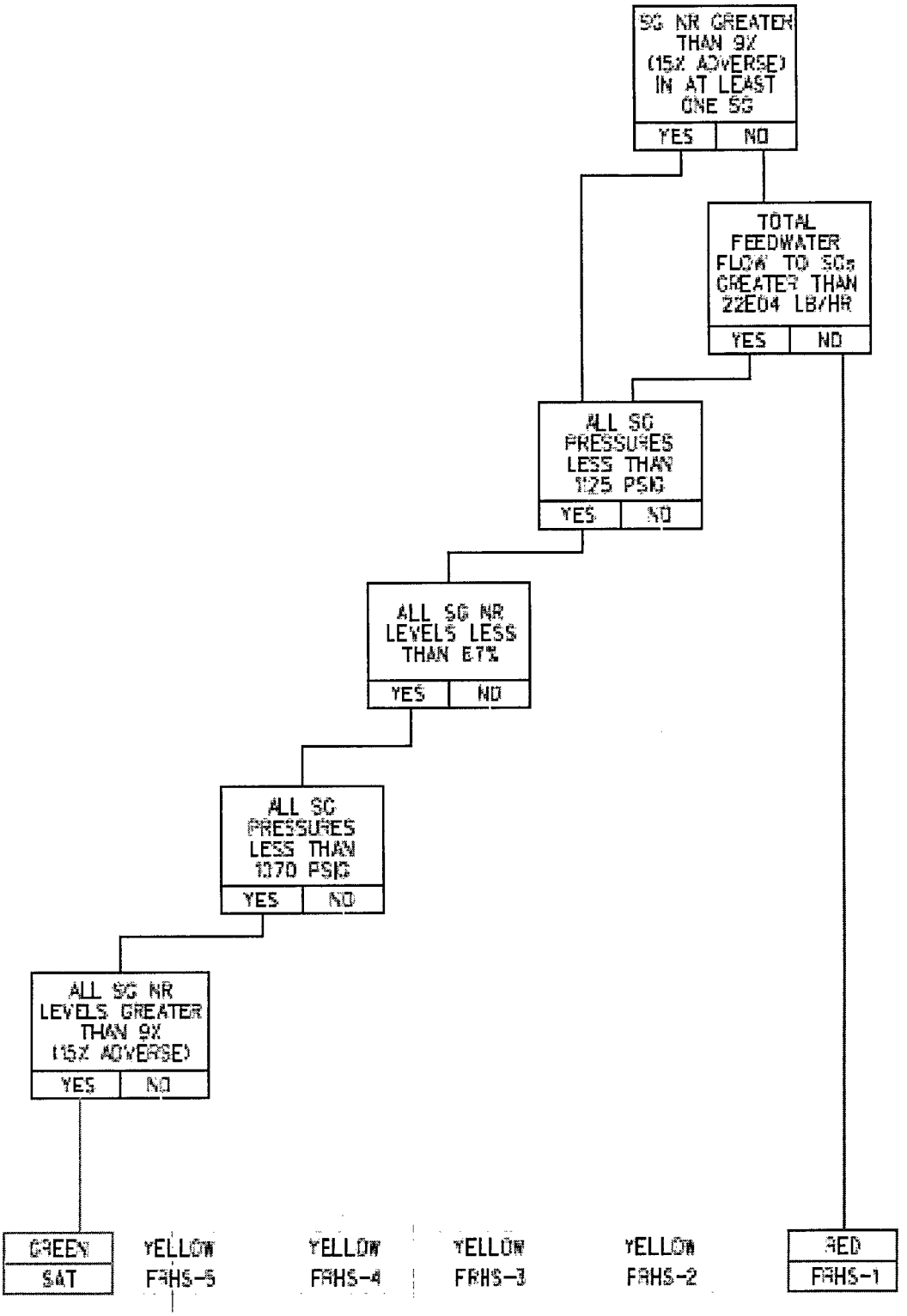

Figures

CFST – Thermal Shock

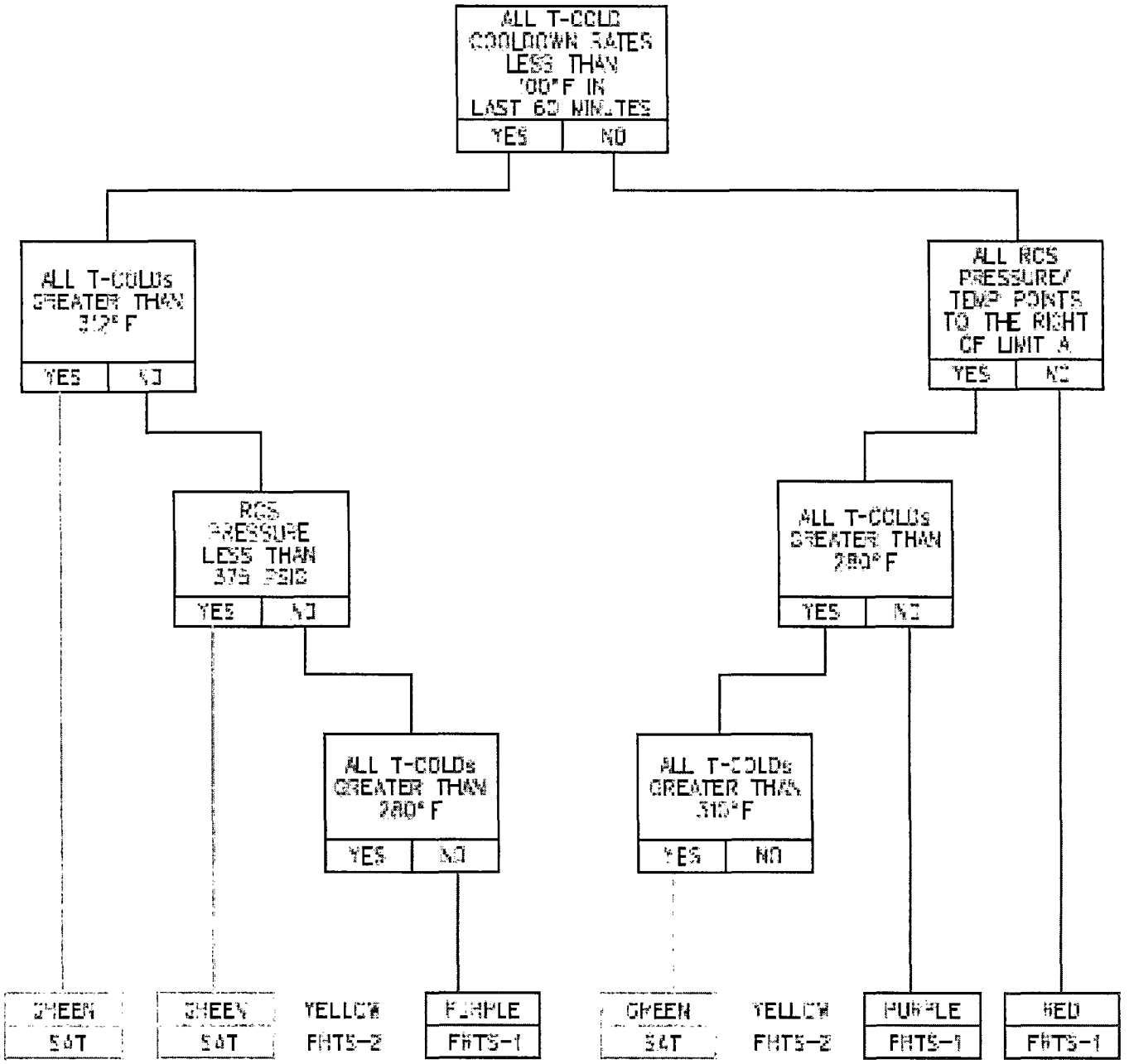

Figures

Thermal Shock Limit A Curve

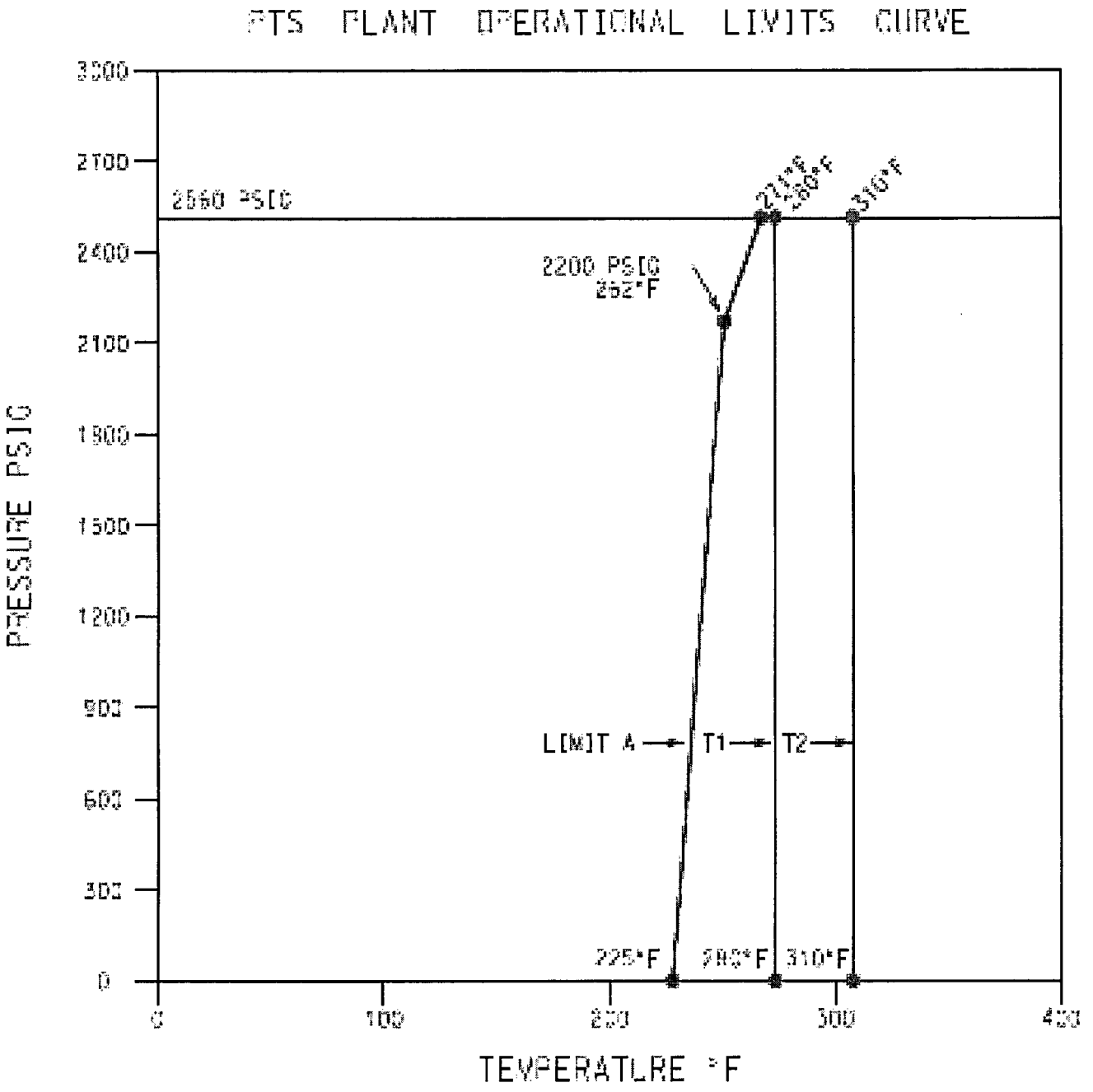

Figures

CFST – Containment Environment

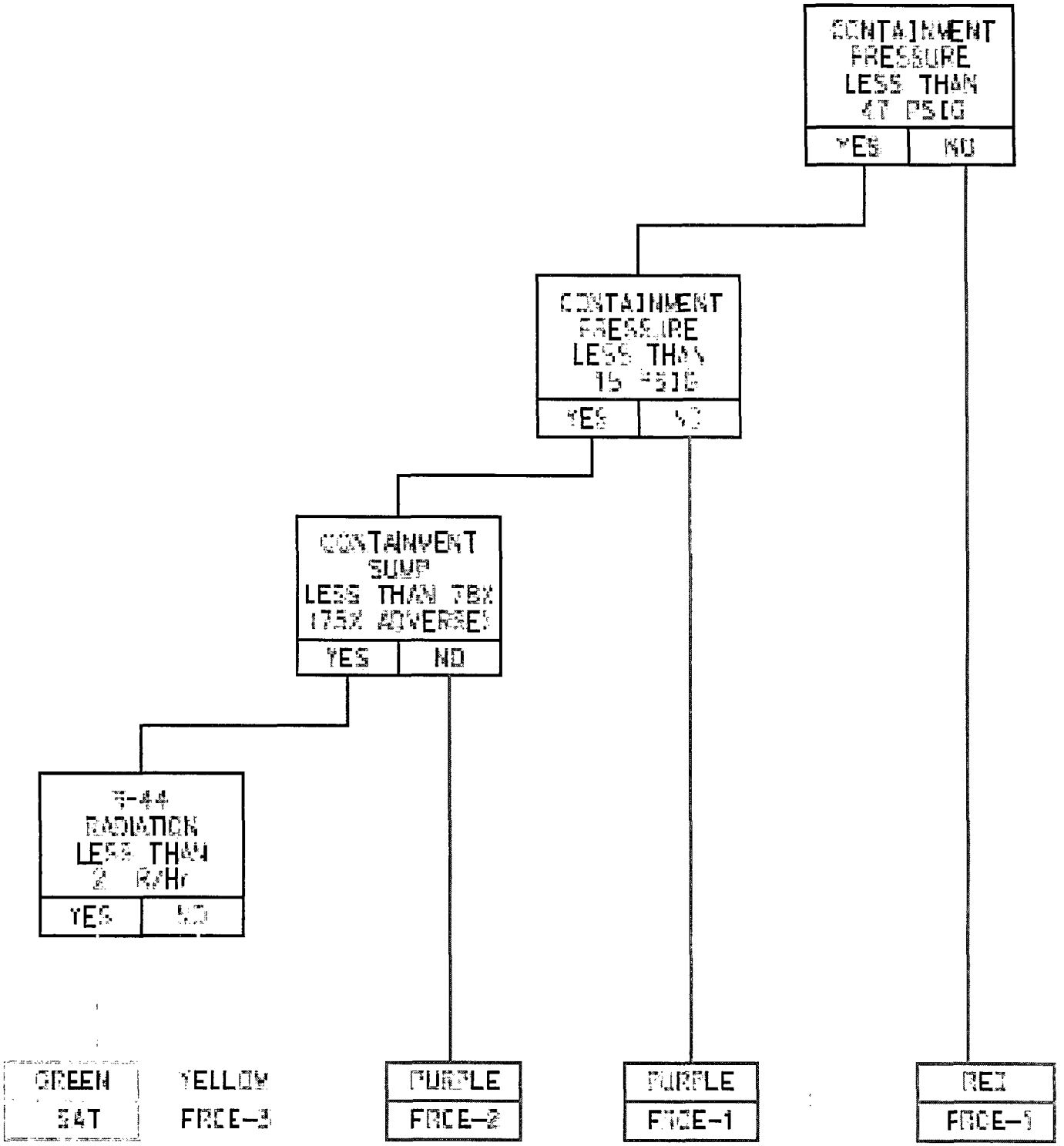

Figures

RCS Level Instrument Ranges

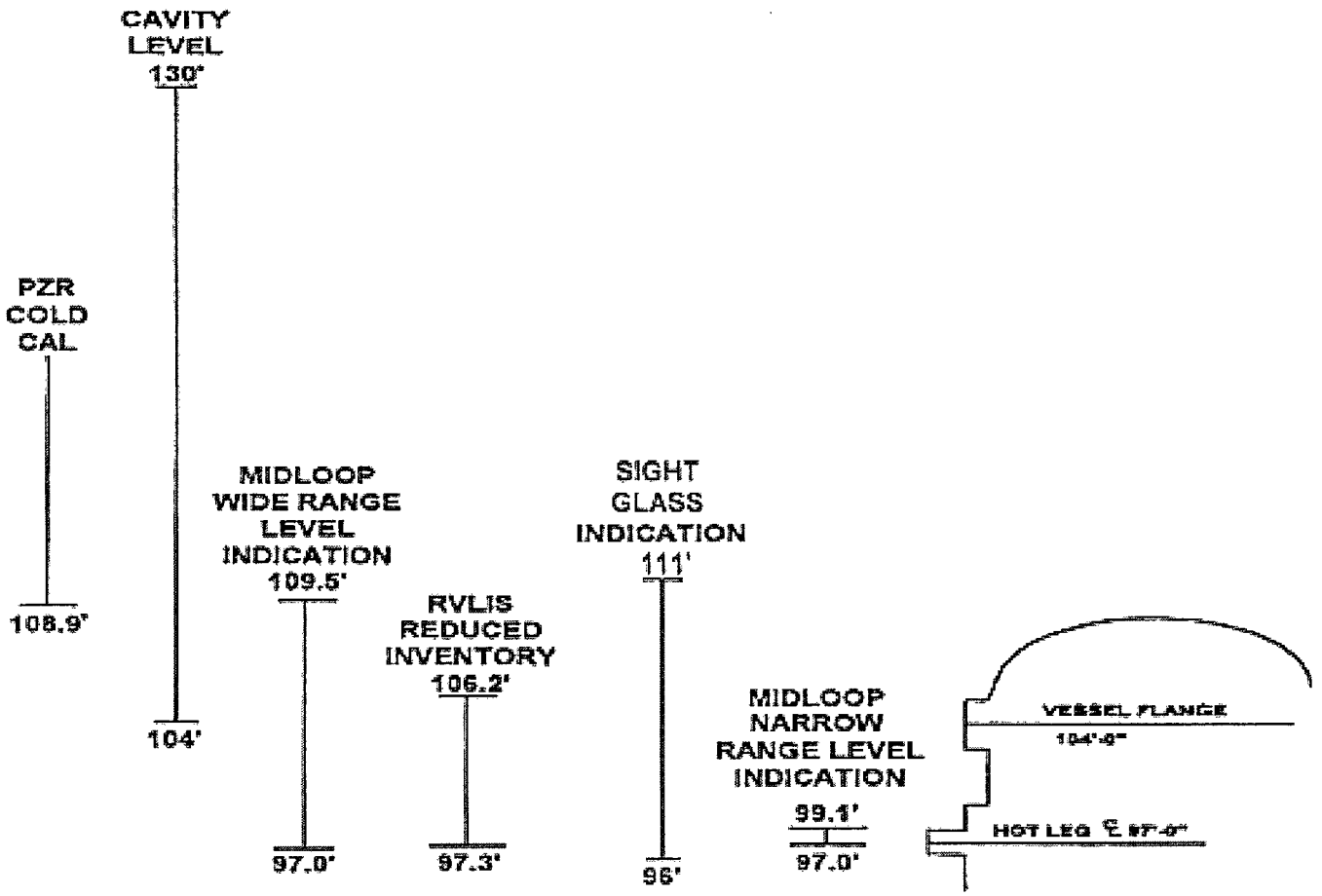

Figures

Attachment 3 – Definitions

Selected words in the ECG Initialting Conditions (ICs) and Emergency Action Levels (EALs) have been set in all capital letters and bolded.These words are defined terms having specific meanings as they relate to this document and the definitions of these terms are provided below and in the basis for the EAL that the word is used in.

AIRCRAFT: Includes both small and large **AIRCRAFT.** Examples of **AIRCRAFT** include general aviation Cessna, Piper and Lear type private planes, large passenger or freight planes as well as police, medical and media helicopters. A large **AIRCRAFT** is referred to as an **AIRLINER.**

AIRLINER/LARGE AIRCRAFT: Any size or type of **AIRCRAFT** with the potential for causing significant damage to the plant (refer to the Security Contingency Plan for a more detailed definition).

BOMB: Refers to an explosive device suspected of having sufficient force to damage plant systems or structures.

CIVIL DISTURBANCE: A group of persons violently protesting station operations or activities at the site.

CONFINEMENT BOUNDARY: Is the barrier(s) between areas containing radioactive substances and the environment and includes the multi-purpose canister (MPC) and, for the purposes of this EAL, the associated cask shielding.

CONTAINMENT CLOSURE: Is the Salem procedurally defined action taken to secure containment and its associated structures, systems, and components as a functional barrier to fission product release under existing plant conditions. **CONTAINMENT CLOSURE** status is checked and verified using S1(S2).OP-AB.CONT-0001(Q).

CREDIBLE / ACTUAL THREAT: Is a threat which poses a likely and serious danger to the safe operation of the facility or to site personnel and public safety.

DEGRADED PERFORMANCE: Assessment of degraded safe shutdown system performance includes examination of systems in standby status as well as those in operation. When a safe shutdown system is in operation, its performance can be directly observed and compared to its design capability (e.g., rated flow is required but cannot be achieved). When an operating safe shutdown system cannot fulfill its design function, its performance is degraded. When a safe shutdown system is in standby, its performance capability may not be readily determined. One or more of the following can provide indirect indication of its performance capability:

- Electrical faults on power supplies

- Normally closed breakers in tripped position
- System annunciators activated
- System warning lights lit
- Insufficient system pressure from keep-fill pumps
- Elevated area temperatures or radiation levels
- Increased sump pump operation in areas in which the system is located

EXPLOSION: A rapid, violent, unconfined combustion, or catastrophic failure of pressurized/energized equipment that imparts energy of sufficient force to potentially damage permanent structures, systems, or components.

FAULTED: (PWRs) In a steam generator, the existence of secondary side leakage that results in an uncontrolled drop in steam generator pressure or the steam generator being completely depressurized.

FIRE: Combustion characterized by heat and light. Sources of smoke such as slipping drive belts or overheated electrical equipment do not constitute **FIRES**. Observation of flame is preferred but is NOT required if large quantities of smoke and heat are observed.

HOSTAGE: A person(s) held as leverage against the station to ensure that demands will be met by the station.

HOSTILE ACTION: An act toward Salem or Hope Creek or its personnel that includes the use of violent force to destroy equipment, take **HOSTAGES**, and/or intimidate PSEG to achieve an end. This includes attack by air, land, or water using guns, explosives, **PROJECTILE**s, vehicles, or other devices used to deliver destructive force. Other acts that satisfy the overall intent may be included. **HOSTILE ACTION** should not be construed to include acts of civil disobedience or felonious acts that are not part of a concerted attack on Salem or Hope Creek. Non-terrorism-based EALs should be used to address such activities (i.e., this may include violent acts between individuals in the **OCA**).

HOSTILE FORCE: One or more individuals who are engaged in a determined assault, overtly or by stealth and deception, equipped with suitable weapons capable of killing, maiming, or causing destruction.

IDENTIFIED LEAKAGE: As defined in T/S, shall be leakage (except Reactor Coolant Pump Seal Water Injection) into closed systems, such as pump seal or valve packing leaks that are captured and conducted to a sump or collecting tank, or, shall be leakage into the containment atmosphere from sources that are both specifically located and known either not to interfere with the operation of the leakage detection systems or not to be **PRESSURE BOUNDARY LEAKAGE**, or, shall be Reactor coolant system leakage through a steam generator to the secondary system (primary-to-secondary leakage).

IMMINENT: Mitigation actions have been ineffective, additional actions are not expected to be successful, and trended information indicates that the event or condition will occur within approximately 2 hours (unless a different time is specified).

INDEPENDENT SPENT FUEL STORAGE INSTALLATION (ISFSI): A complex that is designed and constructed for the interim storage of spent nuclear fuel and other radioactive materials associated with spent fuel storage.

MALICIOUS ACT: Purposeful malevolent actions directed at compromising reactor safety and thus could directly or indirectly endanger the public health and safety.

MINIMUM EXCLUSION AREA (MEA): The closest location just beyond the **OWNER CONTROLLED AREA** where a member of the general public could gain access. For Salem the **MEA** is 0.79 miles.

NORMAL PLANT OPERATIONS: Activities at the plant site associated with routine testing, maintenance, or equipment operations, in accordance with normal operating or administrative procedures. Entry into abnormal or emergency operating procedures, or deviation from normal security or radiological controls posture, is a departure from **NORMAL PLANT OPERATIONS**.

OWNER CONTROLLED AREA (OCA): Property owned, maintained and controlled by PSEG Nuclear as part of the Salem & Hope Creek Generating Station complex. For the purpose of emergency classification, area from the PSEG Nuclear access road checkpoint and inward towards the stations is considered the **OCA**.

PRESSURE BOUNDARY LEAKAGE: As defined in T/S, shall be leakage (except steam generator tube leakage) through a non-isolable fault in a Reactor Coolant System component body, pipe wall or vessel wall.

PROJECTILE: An object that impacts Salem and/or Hope Creek that could cause concern for continued operability, reliability, or personnel safety.

PROTECTED AREA (PA): A security controlled area within the **OWNER-CONTROLLED AREA (OCA)** that is enclosed by the security perimeter fence and monitored by intrusion detection systems. Access to the **PA** requires proper security clearance and is controlled at the Security Center.

RUPTURED: (PWRs) In a steam generator, existence of primary-to-secondary leakage of a magnitude sufficient to require or cause a reactor trip and safety injection.

SABOTAGE: Deliberate damage, mis-alignment, or mis-operation of plant equipment with the intent to render the equipment inoperable. Equipment found tampered with or damaged due to malicious mischief may not meet the definition of **SABOTAGE** until this determination is made by security supervision.

Attachment 4 – Glossary of Abbreviations & Acronyms

Acronyms and Abbreviations used in the ECG and ECG basis document are listed in this attachment.

AAAG	-	Accident Assessment Advisory Group (Delaware)
AB	-	Auxiliary Building
AC	-	Alternating Current
ADMSS	-	Administrative Support Supervisor - TSC
AFST	-	Auxiliary Feedwater Storage Tank
AFW	-	Auxiliary Feedwater
ALARA	-	As Low As Reasonably Achievable
ARM	-	Area Radiation Monitor
ASAP	-	As Soon As Possible
ASM	-	Administrative Support Manager
ATWT	-	Anticipated Transient Without Trip
Aux	-	Auxiliary
BKGD	-	Background
BKR	-	Breaker (electrical circuit)
BLDG	-	Building
BNE	-	Bureau of Nuclear Engineering (NJDEPE)
CAS	-	Central Alarm Station
CCPM	-	Corrected Counts per Minute
CEDE	-	Committed Effective Dose Equivalent
CDE	-	Committed Dose Equivalent
CET	-	Core Exit Thermocouple
CFCU	-	Containment Fan Coil Unit
CFR	-	Code of Federal Regulations
CFST	-	Critical Safety Function Status Tree
CIS	-	Containment Isolation System
CM1	-	Primary Communicator (CR)
CM2	-	Secondary Communicator (CR)
CNTMT	-	Containment (Barrier)
CoC	-	Certificate of Compliance
CO_2	-	Carbon dioxide
CP	-	Control Point
CPM	-	Counts Per Minute
CPS	-	Counts Per Second
CR	-	Control Room
CRS	-	Control Room Supervisor
CREF	-	Control Room Emergency Filter System

CVCS	-	Chemical and Volume Control System
DC	-	Direct Current
DDE	-	Deep Dose Equivalent
DEI	-	Dose Equivalent Iodine
DEMA	-	Delaware Emergency Management Agency
DEP	-	Department of Environmental Protection (NJ)
DHS	-	Department of Homeland Security
DID	-	Direct Inward Dial (phone system)
DOE	-	Department of Energy
DOT	-	Department of Transportation
DPCC/DCR	-	Discharge Prevention, Containment, & Countermeasures/Discharge Cleanup & Removal Plan
DPM	-	Decades per Minute
DPM	-	Disintegrations per Minute
DRCF	-	Dose Rate Conversion Factor
EACS	-	Emergency Air Conditioning System (Control Room)
EAL	-	Emergency Action Level
EAS	-	Emergency Alert System (Broadcast)
ECCS	-	Emergency Core Cooling Systems
ECG	-	Event Classification Guide
EC	-	Emergency Coordinator
EDG	-	Emergency Diesel Generator
EDO	-	Emergency Duty Officer
EERC	-	Energy & Environmental Resource Center (Old NTC)
EMRAD	-	Emergency Radio (NJ)
ENC	-	Emergency News Center
ENS	-	Emergency Notification System (NRC)
EOC	-	Emergency Operations Center (NJ & DE)
EOF	-	Emergency Operations Facility
EOP	-	Emergency Operating Procedures
EPA	-	Emergency Preparedness Advisor
EPA	-	Environmental Protection Agency
EPIP	-	Emergency Plan Implementing Procedure
EPM	-	Emergency Preparedness Manager
EPZ	-	Emergency Planning Zone (Plume EPZ = 10 Miles, Ingestion EPZ = 50 miles)
ERDS	-	Emergency Response Data System
ERF	-	Emergency Response Facility
ERM	-	Emergency Response Manager
ERO	-	Emergency Response Organization
ESF	-	Engineered Safety Feature
ESSX	-	Electronic Switch System Exchange (Centrex) (Newark 973 Exchange phone system)
FAA	-	Federal Aviation Administration

Abbreviations & Acronyms

FBI	-	Federal Bureau of Investigation
FC	-	Fuel Clad (Barrier)
FFD	-	Fitness For Duty
FHB	-	Fuel Handling Building
FPB	-	Fission Product Barrier
FRCC	-	Functional Restoration Core Cooling
FRCE	-	Functional Restoration Containment Environment
FRCI	-	Functional Restoration Coolant Inventory
FRERP	-	Federal Radiological Emergency Response Plan
FRHS	-	Functional Restoration Heat Sink
FRSM	-	Functional Restoration Shutdown Margin
FRTS	-	Functional Restoration Thermal Shock
FTS	-	Federal Telecommunications System (NRC)
GE	-	General Emergency
HCGS	-	Hope Creek Generating Station
HEPA	-	High Efficiency Particulate Absorbers
HP	-	Health Physics
HVAC	-	Heating, Ventilation & Air Conditioning
HX	-	Heat Exchanger
IAW	-	In Accordance With
IC	-	Initiating Condition
ICMF	-	Initial Contact Message Form
IDLH	-	Immediately Dangerous to Life and Health
IPEEE	-	Individual Plant Examination of External Events
IR	-	Intermediate Range
ISFSI	-	Independent Spent Fuel Storage Installation
I/S	-	In Service
ISOL	-	Isolation
K_{eff}	-	Effective Neutron Multiplication Factor
KI	-	Potassium Iodide
KV	-	Kilovolt (1000 volts)
LAC	-	Lower Alloways Creek
LCO	-	Limiting Condition for Operation
LDC	-	Learning Development Center (aka - NAB or TB2)
LDE	-	Lens Dose Equivalent
LEL	-	Lower Explosive Limit
LFL	-	Lower Flammability Limit
LLD	-	Lowest Level Detectable
LOCA	-	Loss of Coolant Accident
LOP/LOPA	-	Loss of Offsite Power/ Loss of Offsite Power Accident

LPZ	-	Low Population Zone
MBD	-	Mixed Bed Demineralizer
MDA	-	Minimum Detectable Amount
MEA	-	Minimum Exclusion Area (Salem = .79 miles, HC = .56 miles)
MEES	-	Major Equipment & Electrical Status (Form)
MET	-	Meteorological
MIDAS	-	Meteorological Information Data Acquisition System
MIMS	-	Metal Impact Monitoring System
MOU	-	Memorandum of Understanding
MRO	-	Medical Review Officer
MSIV	-	Main Steam Isolation Valve
MSLI	-	Main Steam Line Isolation
NAB	-	Nuclear Administration Building (aka – LDC or TB2)
NAWAS	-	National Attack Warning Alert System
NCO	-	Nuclear Control Operator
NEI	-	Nuclear Energy Institute
NEO	-	Nuclear Equipment Operator
NETS	-	Nuclear Emergency Telecommunications System
NFE	-	Nuclear Fuels Engineer
NFPB	-	Normal Full Power Background
NG	-	Noble Gas
NJSP	-	New Jersey State Police
NOAA	-	National Oceanographic and Atmospheric Administration
NOSF	-	Nuclear Operations Support Facility
NR	-	Narrow Range
NRC	-	Nuclear Regulatory Commission
NSP	-	Nuclear Site Protection
NUMARC	-	Nuclear Management and Resources Council
NWS	-	National Weather Service
OBE	-	Operating Basis Earthquake
OCA	-	Owner Controlled Area
ODCM	-	Offsite Dose Calculation Manual
OEM	-	Office of Emergency Management
OHA	-	Overhead Annunciators
OSB	-	Operational Status Board (Form)
OSC	-	Operations Support Center
PAG	-	Protective Action Guideline
PAR	-	Protective Action Recommendation
PIM	-	Public Information Manager
PMP	-	Pump
PORV	-	Power Operated Relief Valve

PRT	-	Pressurizer Relief Tank
PSEG	-	Public Service Enterprise Group
PSIA	-	Pounds per Square Inch Absolute
PSIG	-	Pounds Square Inch Gauge
PWR	-	Pressurized Water Reactor
PWST	-	Primary Water Storage Tank
PZR	-	Pressurizer
RAC	-	Radiological Assessment Coordinator
RAD	-	Radiation
RAL	-	Reportable Action Level
RC	-	Reactor Coolant
RCA	-	Radiologically Controlled Area
RCAM	-	Repair and Corrective Action Mission
RCDT	-	Reactor Coolant Drain Tank
RCP	-	Reactor Coolant Pump
RCS	-	Reactor Coolant System (Barrier)
RHR	-	Residual Heat Removal
RM	-	Recovery Manager
RMO	-	Recovery Management Organization
RMS	-	Radiation Monitoring System
ROIC	-	Regional Operations & Intelligence Center (NJSP)
RPS	-	Radiation Protection Supervisor
RPS	-	Reactor Protection System
RRC	-	Remote Response Center (in NOSF)
RSM	-	Radiological Support Manager
RVLIS	-	Reactor Vessel Level Instrumentation System
RWST	-	Refueling Water Storage Tank
SAE	-	Site Area Emergency
SAM	-	Severe Accident Management
SAS	-	Secondary Alarm Station (Security)
SAT	-	Satisfactory
SBO	-	Station Blackout
SCBA	-	Self Contained Breathing Apparatus
SCP	-	Security Contingency Procedure
SDE	-	Shallow Dose Equivalent
SDM	-	Shutdown Margin
SFP	-	Spent Fuel Pool
S/G	-	Steam Generator
SGS	-	Salem Generating Station
SGTR	-	Steam Generator Tube Rupture
SI	-	Safety Injection
SJAE	-	Steam Jet Air Ejector

SM	-	Shift Manager
SNM	-	Special Nuclear Material
SOS	-	Systems Operations Supervisor (Security)
SPDS	-	Safety Parameter Display System
SRPT	-	Shift Radiation Protection Technician
SSCL	-	Station Status Checklist (form)
SSE	-	Safe Shutdown Earthquake
SSM	-	Site Support Manager
SSNM	-	Strategic Special Nuclear Material
STA	-	Shift Technical Advisor
SUR	-	Start-up Rate
T-COLD	-	Temperature Cold (Leg)
T-HOT	-	Temperature Hot (Leg)
TAF	-	Top of Active Fuel - BWR
TDR	-	Technical Document Room
TEDE	-	Total Effective Dose Equivalent
TOAF	-	Top of Active Fuel - PWR
TPARD	-	Total Protective Action Recommendation Dose
T/S	-	Technical Specifications
TSC	-	Technical Support Center
TSS	-	Technical Support Supervisor
TSTL	-	Technical Support Team Leader
TSTM	-	Technical Support Team Member
UE	-	Unusual Event
UFSAR	-	Updated Final Safety Analysis Report
UHS	-	Ultimate Heat Sink
USCG	-	United States Coast Guard
VCT	-	Volume Control Tank
VDC	-	Volts Direct Current
VLV	-	Valve
WB	-	Whole Body
WR	-	Wide Range

Attachment 5 – SGS-to-NEI 99-01 EAL Cross-Reference

This cross-reference is provided to facilitate association and location of a Salem Generating Station EAL within the NEI 99-01 IC/EAL identification scheme. Further information regarding the development of the SGS EALs based on the NEI guidance can be found in the EAL Comparison Matrix.

SGS	NEI 99-01	
EAL	IC	Example EAL
RU1.1	AU1	1
RU1.2	AU1	1
RU1.3	AU1	3
RU2.1	AU2	1
RU2.2	AU2	2
RA1.1	AA1	1
RA1.2	AA1	1
RA1.3	AA1	3
RA2.1	AA2	2
RA2.2	AA2	1
RA3.1	AA3	1
RS1.1	AS1	1
RS1.2	AS1	2
RS1.3	AS1	4
RG1.1	AG1	1
RG1.2	AG1	2
RG1.3	AG1	4
CU1.1	CU3	1
CU2.1	CU7	1
CU3.1	CU1	1
CU3.2	CU2	2

SGS	NEI 99-01	
EAL	IC	Example EAL
CU3.3	CU2	1
CU4.1	CU4	1
CU4.2	CU4	2
CU5.1	CU6	1, 2
CU6.1	CU8	1
CA1.1	CA3	1
CA3.1	CA1	1
CA3.2	CA1	2
CA4.1	CA4	1, 2
CS3.2	CS1	3
CG3.2	CG1	2
EU1.1	E-HU1	1
HU1.1	HU1	1
HU1.2	HU1	2
HU1.3	HU1	4
HU1.4	HU1	3
HU1.5	HU1	5
HU2.1	HU2	1
HU2.2	HU2	2
HU3.1	HU3	1
HU3.2	HU3	2
HU4.1	HU4	1, 2, 3
HU6.1	HU5	1
HA1.1	HA1	1
HA1.2	HA1	2
HA1.3	HA1	4
HA1.4	HA1	3
HA1.6	HA1	5

Cross-Reference

SGS	NEI 99-01	
EAL	IC	Example EAL
HA2.1	HA2	1
HA2.2	HA2	1
HA3.1	HA3	1
HA4.1	HA4	1, 2
HA5.1	HA5	1
HA6.1	HA6	1
HS4.1	HS4	1
HS5.1	HS2	1
HS6.1	HS3	1
HG4.1	HG1	1, 2
HG6.1	HG2	1
SU1.1	SU1	1
SU3.1	SU8	2
SU4.1	SU2	1
SU5.1	SU3	1
SU6.1	SU6	1, 2
SU7.1	SU4	1
SU7.2	SU4	2
SU8.1	SU5	1, 2
SA1.1	SA5	1
SA3.1	SA2	1
SA5.1	SA4	1
SS1.1	SS1	1
SS2.1	SS3	1
SS3.1	SS2	1
SS5.1	SS6	1
SG1.1	SG1	1
SG3.1	SG2	1

Cross-Reference

Fission Product Barrier EALs

SGS	NEI 99-01
EAL	**Barrier Threshold**
FB1-L	FC Loss 1
FB4-L	FC Loss 2
FB2-L	FC Loss 3
FB3-L	FC Loss 6
FB5-L	FC Loss 8
FB1-P	FC P-Loss 1
FB2-P	FC P-Loss 1
FB3-P	FC P-Loss 3
FB4-P	FC P-Loss 4
FB5-P	FC P-Loss 8
RB2-L	RCS Loss 2
RB3-L	RCS Loss 4
RB1-L	RCS Loss 6
RB4-L	RCS Loss 8
RB1-P	RCS P-Loss 1
RB2-P	RCS P-Loss 1
RB3-P	RCS P-Loss 2
RB4-P	RCS P-Loss 8
CB1-L	CNTMT Loss 2
CB2-L	CNTMT Loss 2
CB3-L	CNTMT Loss 4
CB4-L	CNTMT Loss 4
CB5-L	CNTMT Loss 5
CB6-L	CNTMT Loss 8
CB1-P	CNTMT P-Loss 1
CB6-P	CNTMT P-Loss 2
CB7-P	CNTMT P-Loss 2

SGS	NEI 99-01
EAL	**Barrier Threshold**
CB8-P	CNTMT P-Loss 2
CB3-P	CNTMT P-Loss 3
CB4-P	CNTMT P-Loss 3
CB5-P	CNTMT P-Loss 6
CB2-P	CNTMT P-Loss 7
CB9-P	CNTMT P-Loss 8

This page intentionally blank

Salem Radiological EAL Setpoint Calculation Document
NEI 99-01, Rev. 05 EALs

Purpose:

This is a reference document that contains the methodology and calculations used in developing the thresholds for radiological release based Emergency Action Levels (EALs). The radiological EALs covered under this document are based on EALs AU1, AA1, AS1 and AG1 in NEI-99-01, Rev. 05, "Methodology for Development of Emergency Action Levels".

Reference Materials:

- NEI 99-01, Rev. 05 - Methodology for Development of Emergency Action Levels, EALs AU1, AA1, AS1 and AG1
- NEI 99-01, Rev. 05 – Appendix A: Basis for Radiological Effluent EALs
- Salem ODCM Rev. 24
- EPA 400-R-92-001, Manual or Protective Action Guides and Protective Actions for Nuclear Incidents

Terms & Calculation Constants and origin:

- ODCM – Offsite Dose Calculation Manual
- Hours in one year: 365.25 days X 24 hrs/day = 8766 hours
- EDE – Effective Dose Equivalent
- CDE - Committed Dose Equivalent
- CEDE - Committed Effective Dose Equivalent = CDE X Weighting Factor (thyroid per 10CFR20)
- TEDE – Total Effective Dose Equivalent = EDE + CEDE
- PAG – Protective Action Guideline: Per EPA = 1000mRem TEDE dose or 5000 mRem thyroid dose. Actual or projected values above these guidelines will require offsite protective actions to be implemented.
- ODCM Rad Effluent Limit - 500 mRem/year is a total site Noble Gas limit that includes Salem 1, Salem 2 and Hope Creek. Therefore, Salem will have an administratively controlled limit of ½ the total site limit or 250 mRem/year for EAL calculation purposes.
- Allocation Factor (AF) = .5 – As defined in the Salem ODCM, (page 83) this is an administrative control imposed to ensure that the combined releases from Salem Units 1 and 2 and Hope Creek will not exceed the regulatory limit from the site. The Site AF is only used in the UE and Alert EALs.

Salem Radiological EAL Setpoint Calculation Document
NEI 99-01, Rev. 05 EALs

- X/Q = Site Specific Atmospheric dispersion to the site boundary. U1 and U2 Value = 2.2E-06 sec/m^3. Origin – Salem ODCM, Rev. 24, Table 2-2.1 and 2-2.2, Parameters for Gaseous Alarm Setpoint Determinations.

- DRCF = Site Specific Dose Rate Conversion Factor. U1 and U2 Value = 4.7E+02 mrem/year per uCi/m^3. Origin - Salem ODCM, Rev. 24, Table C-1, Effective Dose Factors, Noble Gases – Total Body and Skin – Total Body Effective Dose Factor.

Index: (Radiological Release EAL Calculations)

Salem EALS:	**Page #:**
Unusual Event EAL AU1.1 – (Default Release Rate EAL)	4
Unusual Event EAL AU1.2 – (2 time alarm) No Calc needed	-
Unusual Event EAL AU1.3 – (Sample Analysis Concentration)	5
Unusual Event EAL AU1.4 – (Perimeter Monitoring System - NA)	-
Unusual Event EAL AU1.5 – (Dose Assessment - NA)	-
Alert EAL AA1.1 – (Default Release Rate EAL)	6
Alert EAL AA1.2 – (200 time alarm) No Calc needed	-
Alert EAL AA1.3 – (Sample Analysis Concentration)	7
Alert EAL AA1.4 – (Perimeter Monitoring System - NA)	-
Alert EAL AA1.5 – (Dose Assessment- NA)	-
Site Area Emergency EAL AS1.1 – (Default Release Rate EAL)	8
Site Area Emergency EAL AS1.2 – (Dose Assessment)	9
Site Area Emergency EAL AS1.3 – (Perimeter Monitoring Sys - NA)	-
Site Area Emergency EAL AS1.4 – (PA boundary dose rate)	10
Site Area Emergency EAL AS1.4 – (I-131 Field Survey Sample Analysis)	11
General Emergency EAL AG1.1 – (Default Release Rate EAL)	12
General Emergency EAL AG1.2 – (Dose Assessment)	13
General Emergency EAL AG1.3 – (Perimeter Monitoring Sys - NA)	-
General Emergency EAL AG1.4 – (PA boundary dose rate)	14
General Emergency EAL AG1.4 – (I-131 Field Survey Sample Analysis)	15

Salem Radiological EAL Setpoint Calculation Document
NEI 99-01, Rev. 05 EALs

Submitted By: _____Craig Banner _____ Date: 12-15-2009_

EP Review By: _____Gary Young_____ Date: 12-17-2009_

Technical Review: _____Jenny Shelton_____ Date: 06-04-2010_

Salem SFAM Review: ____Phil Quick _____ Date: 06-07-2010_

HC SFAM Review: _____John Molner_____ Date: 06-04-2010_

CFAM Approval: _____David Burgin_____ Date: 06-09-2010_

Salem Radiological EAL Setpoint Calculation Document
NEI 99-01, Rev. 05 EALs

Calculation for: **Unusual Event EAL AU1.1 – (Default Release Rate EAL)**

Objective of Calculation:

Provide a Salem Radiological Release Rate value that equates to a Release that is > 2 times the ODCM limit of 500 mRem/year.

Discussion:

The ODCM limit of 500 mRem/year is a total site limit that includes Salem 1, Salem 2 and Hope Creek. Therefore, Salem 1 &2 will have an administratively controlled limit of ½ the total site limit or 250 mRem/year for EAL calculation purposes.

This EAL does not include Iodine Release Rates, since the Plant Vent does not have an Iodine detector.

Release Rate = Total Noble Gas Release Rate from Salem (Unit 1 & Unit 2) which would result in a TEDE Dose Rate of 250 mRem/year, The EAL value will be 2 times this release rate.

Derivation / Calculation:

Radiological ODCM Limit Calculation for Noble Gas:

$$\text{Release Rate (uCi/Sec)} = \frac{ODCMLimit(m\mathrm{Re}m/year)*(SiteAllocationFactor)}{(ODCM\,X/Q)*(ODCM\,DRCF)}$$

ODCM Limit = 500 mRem/Year
Salem ODCM X/Q = 2.20E-06 sec/m^3
Salem ODCM DRCF = 4.70E+02 mRem/yr/uCi/m^3
Site Allocation Factor = 5.00E-01

$$\text{Release Rate (uCi/Sec)} = \frac{(500m\mathrm{Re}m/yr)*(5.00E-01)}{(2.20E-06\mathrm{sec}/m^3)*(4.70E+02m\mathrm{Re}m/yr/\mu Ci/m^3)}$$

Release Rate = 2.42E+05 uCi/Sec (Also the ODCM Limit Release Rate Value)

EAL Value = 2 times the Release Rate

UE EAL Value: *(EAL # RU1.1)*

Total (S1 & S2) Noble Gas Release Rate > 4.84E+05 µCi/sec

Salem Radiological EAL Setpoint Calculation Document
NEI 99-01, Rev. 05 EALs

Calculation for: **Unusual Event EAL AU1.3 – (Sample Analysis Concentration)**

Objective of Calculation:

Provide a Radiological Release Noble Gas and Iodine Sample Concentration that equates to a Release that is > 2 times the ODCM limit of 500 mRem/year.

Discussion:

The ODCM limit of 500 mRem/year (Noble Gas/Total Body) and 1500mRem/year (I-131/Child Thyroid) is a total site limit that includes Salem 1, Salem 2 and Hope Creek. Therefore, Salem 1&2 will have an administratively controlled limit (allocation factor) of ½ the total site limit or 250 mRem/year (Noble Gas/Total Body) and 750 mRem/year (I-131/Child Thyroid) for EAL calculation purposes. This allocation factor is used in the calculation that derived the Noble Gas and Iodine release rates.

Derivation / Calculation:

Calculation of the threshold sample concentrations are as follows:

Formula: Concentration (uCi/cc) = $\dfrac{SingleUnit\,ReleaseRate * 2}{ConversionFactor * VentFlowRate}$

$$Noble\ Gas\ Sample\ Concentration = \frac{1.21E+05\mu Ci/\sec * 2}{472x80000cfm} = \mathbf{6.4E\text{-}03\ \mu Ci/cc}$$

$$I\text{-}131\ Sample\ Concentration = \frac{10.5E+00\mu Ci/\sec * 2}{472x80000cfm} = \mathbf{5.6E\text{-}07\ \mu Ci/cc}$$

Where:

- Single Unit (U1 or U2) Release Rate (Noble Gas) = Total Noble Gas Release Rate from Salem (Unit 1 & Unit 2) as derived for EAL AU1.1 split between Unit 1 and 2 (divided by 2) = 2.42E+05 uCi/Sec/2 = 1.21E+05 uCi/Sec per Unit.
- Single Unit (UI or U2) Release Rate (Thyroid/I-131) = 10.5 uCi/Sec per unit as per ODCM, Rev. 24, Section 2.3.2
- 2 = EAL criteria of 2X ODCM value
- 472 = conversion factor (28,317 cc/ft^3 x 1 min/60 sec)
- 80000 cfm = Plant Vent Flow (normal)

UE EAL Values: *(EAL# RU1.3)*

Noble Gas Sample Concentration > 6.4E-03 μCi/cc
I-131 Sample Concentration > 5.6E-07 μCi/cc

Salem Radiological EAL Setpoint Calculation Document
NEI 99-01, Rev. 05 EALs

Calculation for: **ALERT EAL AA1.1 – (Default Release Rate EAL)**

Objective of Calculation:

Provide a Radiological Release Rate value that equates to a Release that is > 200 times the ODCM limit of 500 mRem/year.

Discussion:

The ODCM limit of 500 mRem/year is a total site limit that includes Salem 1, Salem 2 and Hope Creek. Therefore, Salem 1 &2 will have an administratively controlled limit of ½ the total site limit or 250 mRem/year for EAL calculation purposes.

This EAL does not include Iodine Release Rates, since the Plant Vent does not have an Iodine detector.

Release Rate = Total Noble Gas Release Rate from Salem (Unit 1 & Unit 2) which would result in a TEDE Dose Rate of 250 mRem/year. The EAL Value will be > 200 times the release rate.

Derivation / Calculation:

ODCM Limit Calculation for Noble Gas:

$$\text{Release Rate (uCi/Sec)} = \frac{(ODCMLimit - m\mathrm{Re}m/year) * (SiteAllocationFactor)}{(ODCM\,X/Q) * (ODCM\,DRCF)}$$

ODCM Limit = 500 mRem/Year
Salem ODCM X/Q = 2.20E-06 sec/m^3
Salem ODCM DRCF = 4.70E+02 mRem/yr/uCi/m^3
Site Allocation Factor = 5.00E-01

$$\text{Release Rate (uCi/Sec)} = \frac{(500m\mathrm{Re}m/yr) * (5.00E-01)}{(2.20E-06\mathrm{sec}/m^3) * (4.70E+02m\mathrm{Re}m/yr/\mu Ci/m^3)}$$

Release Rate = 2.42E+05 uCi/Sec

EAL Value = > 200 times the Release Rate

Alert EAL Value: *(EAL# RA1.1)*

Total (S1 & S2) Noble Gas Release Rate > 4.84E+07 μCi/sec

Salem Radiological EAL Setpoint Calculation Document
NEI 99-01, Rev. 05 EALs

Calculation for: **ALERT EAL AA1.3 – (Sample Analysis Concentration)**

Objective of Calculation:

Provide a Radiological Release Noble Gas and Iodine Sample Concentration that equates to a Release that is > 200 times the ODCM limit of 500 mRem/year.

Discussion:

The ODCM limit of 500 mRem/year (Noble Gas/Total Body) and 1500mRem/year (I-131/Child Thyroid) is a total site limit that includes Salem 1, Salem 2 and Hope Creek. Therefore, Salem 1&2 will have an administratively controlled limit (allocation factor) of ½ the total site limit or 250 mRem/year (Noble Gas/Total Body) and 750 mRem/year (I-131/Child Thyroid) for EAL calculation purposes. This allocation factor is used in the calculation that derived the Noble Gas and Iodine release rates.

Derivation / Calculation:

Calculation of the threshold sample concentrations are as follows:

Formula: Concentration (uCi/cc) = $\dfrac{SingleUnit\,ReleaseRate * 200}{ConversionFactor * VentFlowRate}$

$$Noble\ Gas\ Sample\ Concentration = \frac{1.21E+05\mu Ci/\sec * 200}{472x80000cfm} = \mathbf{6.4E\text{-}01\ \mu Ci/cc}$$

$$I\text{-}131\ Sample\ Concentration = \frac{10.5E+00\mu Ci/\sec * 200}{472x80000cfm} = \mathbf{5.6E\text{-}05\ \mu Ci/cc}$$

Where:

- Single Unit (U1 or U2) Release Rate (Noble Gas) = Total Noble Gas Release Rate from Salem (Unit 1 & Unit 2) as derived for EAL AU1.1 split between Unit 1 and 2 (divided by 2) = 2.42E+05 uCi/Sec/2 = 1.21E+05 uCi/Sec per Unit.
- Single Unit (UI and U2) Release Rate (Thyroid/I-131) = 10.5 uCi/Sec per unit as per ODCM, Rev. 24, Section 2.3.2
- 200 = EAL criteria of > 200X ODCM value
- 472 = conversion factor (28,317 cc/ft^3 x 1 min/60 sec)
- 80000 cfm = Plant Vent Flow (normal)

Alert EAL Values: *(EAL# RA1.3)*

Noble Gas Sample Concentration > 6.4E-01 μCi/cc
I-131 Sample Concentration > 5.6E-05 μCi/cc

Salem Radiological EAL Setpoint Calculation Document
NEI 99-01, Rev. 05 EALs

Calculation for: **SITE AREA EMERGENCY - EAL AS1.1 – (Default Release Rate EAL)**

Objective of Calculation:

Provide a Radiological Release Rate value that equates to a Release resulting in an offsite dose of > 100 mrem EDE at or beyond the site boundary.

Discussion:

This IC addresses radioactivity releases that result in doses at or beyond the site boundary that exceed 10% of the EPA Protective Action Guides (PAGs). Releases of this magnitude are associated with the failure of plant systems needed for the protection of the public.

The monitor reading EALs should be determined using a dose assessment method that back calculates from the dose values specified in the IC. Since doses are generally not monitored in real-time, it is suggested that a release duration of one hour be assumed, and that the EALs be based on a site specific boundary (or beyond) dose of >100 mrem whole body. Iodine Release Rates for this EAL are excluded since the Plant Vent Radiation Monitoring System does not include an Iodine detector.

The meteorology and source term used are the same as used for determining AU1 and AA1 monitor reading EALs.

Release Rate = Total Noble Gas Release Rate from Salem (Unit 1 & Unit 2) which would result in a EDE Dose Rate of > 100mRem/hr at the site boundary or beyond.

Derivation / Calculation:

Radiological Limit Calculation for Noble Gas:

$$\text{Release Rate (uCi/Sec)} = \frac{(10\%ofPAG)mRem(accumulatedin1hour)}{(ODCM\,X/Q)*(ODCM\,DRCF)}$$

10% of PAG = 100 mRem dose accumulated in 1 hour
Salem ODCM X/Q = 2.20E-06 sec/m^3
Salem ODCM DRCF = 5.36E-02 mRem/hr/uCi/m^3 (4.70E+02 mRem/yr/uCi/m^3 / 8766 hrs/yr)
Site Allocation Factor = not used for SAE and GE EALs

$$\text{Release Rate (uCi/Sec)} = \frac{100mRem(doseaccumulatedin1hr)}{(2.20E-06sec/m^3)*(5.36E-02mRem/hr/\mu Ci/m^3)}$$

SAE EAL Value: *(EAL# RS1.1)*

Total (S1 & S2) Noble Gas Release Rate > 8.48E+08 uCi/Sec

Salem Radiological EAL Setpoint Calculation Document
NEI 99-01, Rev. 05 EALs

Calculation for: **SITE AREA EMERGENCY - EAL AS1.2 – (Dose Assessment)**

Objective of Calculation:

Using actual meteorology, provide a dose assessment SSCL threshold TEDE 4-Day Dose value that is equivalent to a TEDE dose of >100 mRem and a Thyroid-CDE Dose of 500 mRem.

Discussion:

This IC addresses radioactivity releases that result in doses at or beyond the site boundary that exceed 10% of the EPA Protective Action Guides (PAGs). Public protective actions will be necessary. Releases of this magnitude are associated with the failure of plant systems needed for the protection of the public and involve fuel damage.

Derivation / Calculation:

The dose assessment output on the SSCL is reported at varying distances from the plant as a TEDE 4-Day dose. This TEDE 4-day dose assumes a 4 hr release duration. To obtain the approximate dose for a projected release condition of 1 hour, the TEDE 4-day dose value would need to be divided by 4.

A TEDE 4-Day Dose > 4.0E+02 mRem correspond directly to an EDE dose rate value of 100 mRem/hr and exceeds 10% of the EPA Protective Actions Guides (PAGs). The Thyroid-CDE Dose > 2.0E+03 mRem correspond directly to an CDE dose rate value of 500 mRem/hr and exceeds 10% of the EPA Protective Actions Guides (PAGs) which was established in consideration of the 1:5 ratio of the EPA PAG for TEDE and thyroid CDE..

Dose Assessment using actual meteorological data provides an accurate indication of release magnitude. The use of dose assessment based EALs is therefore preferred over the use of Release Rate based EALs which utilize calculations which have built-in inaccuracies because ODCM default Meteorological data is used.

SAE EALs Values: *(EAL# RS1.2)*

Dose Assessment TEDE 4-Day Dose > 4.0E+02 mRem

Dose Assessment CDE Dose > 2.0E+03 mRem - based on Dose Assessment using Plant Vent effluent isotopic sample analysis as input to MIDAS and NOT based on a default Noble Gas to Iodine Ratio

Salem Radiological EAL Setpoint Calculation Document
NEI 99-01, Rev. 05 EALs

Calculation for: **SITE AREA EMERGENCY - EAL AS1.4 – (PA boundary dose rate)**

Objective of Calculation:

Provide a **PROTECTED AREA** Boundary dose rate that equates to an offsite dose of > 100 mRem EDE.

Discussion:

This IC addresses radioactivity releases that result in field survey results (closed window) dose rates greater than 100 mR/hr expected to continue for 60 minutes or longer at or beyond the site boundary. This value exceeds 10% of the EPA Protective Action Guides (PAGs). Releases of this magnitude are associated with the failure of plant systems needed for the protection of the public.

Derivation / Calculation:

A Field Measured Dose Rate of > 1.0E+02 mRem/hr corresponds directly to a dose values that exceed 10% of the EPA Protective Actions Guides (PAGs).

SAE EAL Value: *(EAL# RS1.3)*

Dose Rate > 100 mRem/hr

Salem Radiological EAL Setpoint Calculation Document
NEI 99-01, Rev. 05 EALs

Calculation for: **SITE AREA EMERGENCY - EAL AS1.4 – (I-131 Field Survey Sample Analysis)**

Objective of Calculation:

Provide a Field Survey Sample Analysis value that equates to an offsite release that would result in a dose of > 500 mRem Thyroid CDE at or beyond the **PROTECTED AREA** Boundary.

Discussion:

This EAL addresses a radioactivity release field survey I-131 sample concentration or count rate that would result in a Thyroid CDE dose of greater than 500 mRem for one hour of inhalation at or beyond the site boundary. This value exceeds 10% of the EPA Protective Action Guides (PAGs). Releases of this magnitude are associated with the failure of plant systems needed for the protection of the public.

The Iodine-131 field survey sample concentration and count rate threshold is based on I-131 dose conversion factors (DCFs) from EPA-400. The thresholds are based on a Thyroid-CDE Dose Rate of > 500 mRem/hr for I-131.

Field Survey I-131 Sample Analysis results are provided as a sample concentration in units of uCi/cc for field samples counted in a Multi-Channel-Analyzer (MCA).

Derivation / Calculation:

The release sample concentration calculations are as follows.

The sample concentration is calculated using the I-131 Dose Conversion Factor from EPA-400:
Solving the following equation for μCi/cc:

mRem/hr = (μCi/cc)(Dose Conversion Factor)

Then;

$$\textit{I-131 Sample Concentration}\ (\mu Ci/cc) = \left(\frac{500 mRem/hr}{1.30E+09 mRem/\mu Ci/cc/hr}\right) = \mathbf{3.85E\text{-}07\ \mu Ci/cc}$$

Where 1.30E+09 mRem/μCi/cc/hr is the Dose Conversion Factor from EPA-400, Table 5-4, Thyroid Dose, and includes the EPA breathing rate.

SAE EAL Values: *(EAL# RS1.3)*

I-131 Concentration > 3.85E-07 μCi/cc

Salem Radiological EAL Setpoint Calculation Document
NEI 99-01, Rev. 05 EALs

Calculation for: **GENERAL EMERGENCY - EAL AG1.1 – (Default Release Rate EAL)**

Objective of Calculation:

Provide a Radiological Release Rate value that equates to a Release resulting in an offsite dose of > 1000 mrem EDE at or beyond the site boundary.

Discussion:

This IC addresses radioactivity releases that result in doses at or beyond the site boundary that exceed the EPA Protective Action Guides (PAGs). Public protective actions will be necessary. Releases of this magnitude are associated with the failure of plant systems needed for the protection of the public and likely involve fuel damage.

The monitor reading EALs should be determined using a dose assessment method that back calculates from the dose values specified in the IC. Since doses are generally not monitored in real-time, it is suggested that a release duration of one hour be assumed, and that the EALs be based on a site specific boundary (or beyond) dose of > 1000 mrem whole body. Iodine Release Rates for this EAL are excluded since the Plant Vent Radiation Monitoring System does not include an Iodine detector.

The meteorology and source term used are the same as used for determining AU1 and AA1 monitor reading EALs.

Release Rate = Total Noble Gas Release Rate from Salem (Unit 1 & Unit 2) which would result in a TEDE Dose Rate of > 1000 mRem/hr at the site boundary or beyond.

Derivation / Calculation:

Radiological Effluent Technical Specifications/ODCM Limit Calculation for Noble Gas:

$$\text{Release Rate (uCi/Sec)} = \frac{100\% PAG(mRem) Accumulated in 1hr}{(ODCM\,X/Q) * (ODCM\,DRCF)}$$

100% of PAG = 1000 mRem accumulated in 1 hour
Salem ODCM X/Q = 2.20E-06 sec/m^3
Salem ODCM DRCF = 5.36E-02 mRem/hr/uCi/m^3 (4.70E+02 mRem/yr/uCi/m^3 / 8766 hrs/yr)
Site Allocation Factor = not used for SAE and GE EALs

$$\text{Release Rate (uCi/Sec)} = \frac{1000 mRem(dose accumulated in 1hr)}{(2.20E-06 sec/m^3) * (5.36E-02 mRem/hr/\mu Ci/m^3)}$$

GE EAL Value: *(EAL# RG1.1)*

Total (S1 & S2) Noble Gas Release Rate > 8.48E+09 uCi/Sec

Salem Radiological EAL Setpoint Calculation Document
NEI 99-01, Rev. 05 EALs

Calculation for: **GENERAL EMERGENCY - EAL AG1.2 – (Dose Assessment)**

Objective of Calculation:

Using actual meteorology, provide a dose assessment SSCL threshold TEDE 4-Day Dose value that is equivalent to a TEDE dose of > 1000 mRem and a Thyroid-CDE Dose of > 5000 mRem.

Discussion:

This IC addresses radioactivity releases that result in doses at or beyond the site boundary that exceed the EPA Protective Action Guides (PAGs). Public protective actions will be necessary. Releases of this magnitude are associated with the failure of plant systems needed for the protection of the public and involve fuel damage.

Derivation / Calculation:

The dose assessment output on the SSCL is reported at varying distances from the plant as a TEDE 4-Day dose. This TEDE 4-day dose assumes a 4 hr release duration. To obtain the approximate dose for a projected release condition of 1 hour, the TEDE 4-day dose value would need to be divided by 4.

A TEDE 4-Day Dose > 4.0E+03 mRem correspond directly to an EDE dose rate value of >1000 mRem/hr and exceeds the EPA Protective Actions Guides (PAGs). The Thyroid-CDE Dose > 2.0E+04 mRem correspond directly to an CDE dose rate value of > 5000 mRem/hr and exceeds the EPA Protective Actions Guides (PAGs) which was established in consideration of the 1:5 ratio of the EPA PAG for TEDE and thyroid CDE..

Dose Assessment using actual meteorological data provides an accurate indication of release magnitude. The use of dose assessment based EALs is therefore preferred over the use of Release Rate based EALs which utilize calculations which have built-in inaccuracies because ODCM default Meteorological data is used.

GE EAL Values: *(EAL# RG1.2)*

Dose Assessment TEDE 4-Day Dose > 4.0E+03 mRem

Dose Assessment CDE Dose > 2.0E+04 mRem - based on Dose Assessment using Plant Vent effluent isotopic sample analysis as input to MIDAS and NOT based on a default Noble Gas to Iodine Ratio

Salem Radiological EAL Setpoint Calculation Document
NEI 99-01, Rev. 05 EALs

Calculation for: **GENERAL EMERGENCY - EAL AG1.4 – (PA boundary dose rate)**

Objective of Calculation:

Provide a **PROTECTED AREA** Boundary dose rate that equates to an offsite dose of > 1000 mRem EDE.

Discussion:

This IC addresses radioactivity releases that result in doses at or beyond the site boundary that exceed the EPA Protective Action Guides (PAGs). Public protective actions will be necessary. Releases of this magnitude are associated with the failure of plant systems needed for the protection of the public and involves fuel damage.

Derivation / Calculation:

A Field Measured Dose Rate of > 1.0E+03 mRem/hr corresponds directly to a dose values that exceed the EPA Protective Actions Guides (PAGs).

GE EAL Value: *(EAL# RG1.3)*

Dose Rate > 1000 mRem/hr

Salem Radiological EAL Setpoint Calculation Document
NEI 99-01, Rev. 05 EALs

Calculation for: **GENERAL EMERGENCY - EAL AG1.4 – (I-131 Field Survey Sample Analysis)**

Objective of Calculation:

Provide a Field Survey Sample Analysis value that equates to an offsite release that would result in a dose of > 5000 mRem Thyroid CDE at or beyond the **PROTECTED AREA** Boundary.

Discussion:

This EAL addresses a radioactivity release field survey I-131 sample concentration or count rate that would result in a Thyroid CDE dose of greater than 5000 mRem for one hour of inhalation at or beyond the site boundary. This value exceeds the EPA Protective Action Guides (PAGs). Releases of this magnitude are associated with the failure of plant systems needed for the protection of the public.

The Iodine-131 field survey sample concentration and count rate threshold is based on I-131 dose conversion factors (DCFs) from EPA-400. The thresholds are based on a Thyroid-CDE Dose Rate of > 5000 mRem/hr for I-131.

Field Survey I-131 Sample Analysis results are provided as sample concentration in units of uCi/cc for field samples counted in a Multi-Channel-Analyzer (MCA).

Derivation / Calculation:

The release sample concentration calculations are as follows.

The sample concentration is calculated using the I-131 Dose Conversion Factor from EPA-400:
Solving the following equation for μCi/cc:

$$\text{mRem/hr} = (\mu\text{Ci/cc})(\text{Dose Conversion Factor})$$

Then;

$$\textit{I-131 Sample Concentration}\ (\mu\text{Ci/cc}) = \left(\frac{5000 m\text{Rem}/hr}{1.30E+09 m\text{Rem}/\mu Ci/cc/hr}\right) = \mathbf{3.85E\text{-}06\ \mu Ci/cc}$$

Where 1.30E+09 mRem/μCi/cc/hr is the Dose Conversion Factor from EPA-400, Table 5-4, Thyroid Dose, and includes the EPA breathing rate.

GE EAL Values: *(EAL# RG1.3)*

I-131 Concentration > 3.85E-06 μCi/cc