HITACHI

GE Hitachi Nuclear Energy

25A5675BJ
Revision 5
November 2010

ABWR
Design Control Document
Tier 2

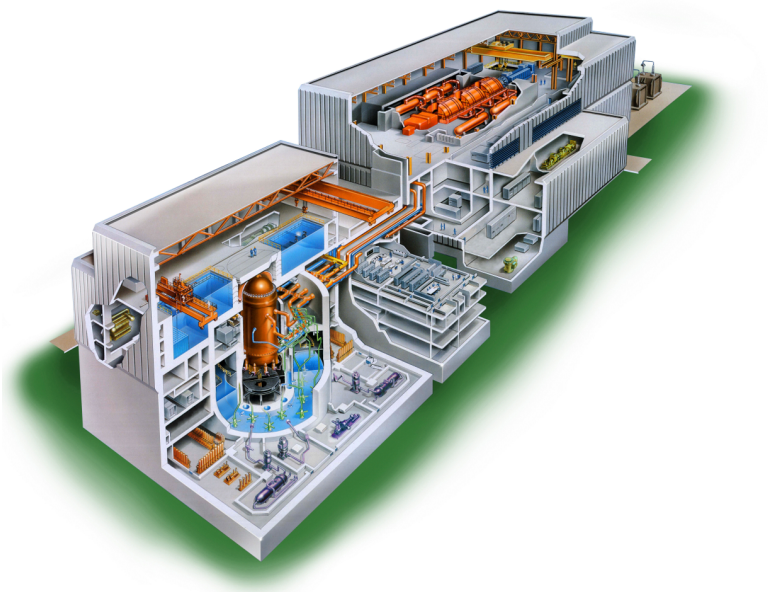

Chapter 21

Volume 8

Copyright 1994, 2010, GE-Hitachi Nuclear Energy Americas LLC
All Rights Reserved

Figure No.	Title	Page No.
	25A5675BJ VOLUME 8	
9A.4-16	Control Building Fire Protection at Elevation 12300 mm	570
9A.4-16a	Control Building Fire Protection at Elevation 17150 mm	571
9A.4-16b	Control Building Fire Protection at Elevation 22200 mm	572
9A.4-17	Turbine Building Fire Protection, Section A-A	573
9A.4-18	Turbine Building Fire Protection at Elevation 5300 mm	574
9A.4-19	Turbine Building Fire Protection at Elevation 12300 mm	575
9A.4-20	Turbine Building Fire Protection at Elevation 20300 mm	576
9A.4-21	Turbine Building Fire Protection at Elevation 30300 mm	577
9A.4-22	Service Building Fire Protection, section B-B (See Figure 9AA-11)	565
9A.4-23	Service Building Fire Protection at Elevation -2150 mm (See Figure 9A.4-13)	567
9A.4-24	Service Building Fire Protection at Elevation 3500 mm (See Figure 9A.4-14)	568
9A.4-25	Service Building Fire Protection at Elevation 7900 mm (See Figure 9A.4-1S)	569
9A.4-26	Service Building Fire Protection at Elevation 12300 mm (see Figure 9A.4-16)	570
9A.4-27	Service Building Fire Protection at Elevation 17150 mm (see Figure 9A.4016a)	571
9A.4-28	Radwaste Building Fire Protection, Section A-A	578
9A.4-29	Radwaste Building Fire Protection at Elevation -1500 mm	579
9A.4-30	Radwaste Building Fire Protection at Elevation 4800 mm	580
9A.4-31	Radwaste Building Fire Protection at Elevation 12300 mm	581
9A.4-32	Radwaste Building Fire Protection at Elevation 21000 mm	582
10.1-2	Reference Heat Balance for Guaranteed Reactor Rating	583
10.1-3	Reference Heat Balance for Valves-Wide-Open (VWO)	584

Figure No.	Title	Page No.
11.2-1	Radwaste System PFD (shts. 1-2)	584.1
11.3-1	Offgas System PFD	584.39
12.3-1	Reactor Building Radiation Zone Map for Full Power & Shutdown Operation at Elevation -8200 mm (B3F)	585
12.3-2	Reactor Building Radiation Zone Map for Full Power & Shutdown Operation at Elevation -1700 mm (B2F)	586
12.3-3	Reactor Building Radiation Zone Map for Full Power & Shutdown Operation at Elevation 4800/8500 mm (B1F)	587
12.3-5	Reactor Building Radiation Zone Map for Full Power & Shutdown Operation at Elevation 12300 mm (1F)	588
12.3-6	Reactor Building Radiation Zone Map for Full Power & Shutdown Operation at Elevation 18100 mm (2F)	589
12.3-7	Reactor Building Radiation Zone Map for Full Power & Shutdown Operation at Elevation 23500 mm (3F)	590
12.3-8	Reactor Building Radiation Zone Map for Full Power & Shutdown Operation at Elevation 27200 mm (3.SF)	591
12.3-9	Reactor Building Radiation Zone Map for Full Power & Shutdown Operation at Elevation 31700/36200 mm (4FM)	592
12.3-10	Reactor Building Radiation Zone Map for Full Power and Shutdown Operation, Section A-A	593
12.3-11	Reactor Building Radiation Zone Map for Full Power and Shutdown Operation, Section B-B	594
12.3-12	Reactor Building Radiation Zone Map Post LOCA at Elevation -8200 mm (B3F)	595
12.3-13	Reactor Building Radiation Zone Map Post LOCA at Elevation -1700 mm (B2F)	596
12.3-14	Reactor Building Radiation Zone Map Post LOCA at Elevation 4800/8500 mm (B1F)	597
12.3-16	Reactor Building Radiation Zone Map Post LOCA at Elevation 12300 mm (1F)	598

Figure No.	Title	Page No.
12.3-17	Reactor Building Radiation Zone Map Post LOCA at Elevation 18100 mm (2F)	599
12.3-18	Reactor Building Radiation Zone Map Post LOCA at Elevation 23500 mm (3F)	600
12.3-19	Reactor Building Radiation Zone Map Post LOCA at Elevation 27200 mm (3.5F)	601
12.3-20	Reactor Building Radiation Zone Map Post LOCA at Elevation 31700/38200 mm (4FM)	602
12.3-21	Reactor Building Radiation Zone Map Post LOCA, Section A-A	603
12.3-22	Reactor Building Radiation Zone Map Post LOCA, Section B-B	604
12.3-37	Radwaste Building, Radiation Zone Map, Normal Operation at Elevation -1500 mm	606
12.3-38	Radwaste Building, Radiation Zone Map, Normal Operation at Elevation -4800 mm	607
12.3-39	Radwaste Building, Radiation Zone Map, Normal Operation at Elevation 12300 mm	608
12.3-40	Radwaste Building, Radiation Zone Map, Normal Operation at Elevation 21000 mm	609
12.3-41	Radwaste Building, Radiation Zone Map, Normal Operation, Section A-A	610
12.3-42	Control Building, Radiation Zone, Normal Operation at Elevation -8200 mm	611
12.3-43	Control and Service Building, Radiation Zone, Normal Operation at Elevation -2150 mm	612
12.3-44	Control and Service Building, Radiation Zone, Normal Operation at Elevation 3500 mm	613
12.3-45	Control and Service Building, Radiation Zone, Normal Operation at Elevation 7900 mm	614
12.3-46	Control and Service Building, Radiation Zone, Normal Operation at Elevation 12300 mm	615
12.3-47	Control and service Building, Radiation Zone, Normal Operation at Elevation 17150 mm	616

Figure No.	Title	Page No.
12.3-48	Control and service Building, Radiation Zone, Normal Operation, Side View, Cross section B-B	617
12.3-49	Turbine Building, Radiation Zone at Elevation 5300 mm	618
12.3-50	Turbine Building, Radiation Zone at Elevation 12300 mm	619
12.3-51	Turbine Building, Radiation Zone at Elevation 20300 mm	620
12.3-52	Turbine Building, Radiation Zone at Elevation 30300 mm	621
12.3-53	Turbine Building, Radiation Zone at Normal Operation Longitudinal Section A-A	622
12.3-54	Control and Service Building, Radiation Zone, Post LOCA, Section B-B	623
12.3-55	Turbine Building, Radiation Zone, Post LOCA, Longitudinal Section A-A	624
12.3-56	Reactor Building, Area Radiation Monitors at Elevation -8200 mm	625
12.3-57	Reactor Building, Area Radiation Monitors at Elevation -1700 mm	626
12.3-58	Reactor Building, Area Radiation Monitors at Elevation 4800/ 8500 mm	627
12.3-59	Reactor Building, Area Radiation Monitors at Elevation 12300 mm	628
12.3-60	Reactor Building, Area Radiation Monitors at Elevation 23500 mm	629
12.3-61	Reactor Building, Area Radiation Monitors at Elevation 27200 mm	630
12.3-62	Reactor Building, Area Radiation Monitors at Elevation 31700/ 38200 mm	631
12.3-63	Reactor Building, Area Radiation Monitors, section B-B	632
12.3-64	Control and Service Buildings, Area Radiation Monitors, Section B-B	633
12.3-65	Radwaste Building, Area Radiation Monitors at Elevation -1500 mm	634

Figure No.	Title	Page No.
12.3-66	Radwaste Building ,Area Radiation Monitors at Elevation 4800 mm	635
12.3-67	Radwaste Building ,Area Radiation Monitors at Elevation 12300 mm	636
12.3-68	Radwaste Building ,Area Radiation Monitors at Elevation 21000 mm	637
12.3-70	Turbine Building , Area Radiation Monitors at Elevation 12300 mm	638
12.3-71	Turbine Building, Area Radiation Monitors at Elevation 20300 mm	639
12.3-72	Turbine Building, Area Radiation Monitors at Elevation 30300 mm	640
12.3-73	Turbine Building, Area Radiation Monitors, Longitudinal Section A-A	641
15B-3	Fine Motion Control Rod Drive	642
18C-5	Arrangement of Equipment of Main Control Console	643
18C-7	Fixed-Position Display	644
20.3.4-5a	Low Pressure Core Flooder Sparger Sht. 1)	645
20.3.4-5b	Low Pressure Core Flooder Sparger {Sht. 2	646
20.3.4-5c	High Pressure Core Flooder	647

FIGURE 9A.4-16 CONTROL BUILDING FIRE PROTECTION AT ELEVATION 12300 MM

Contains Security-Related Information - Withheld Under 10 CFR 2.390

FIGURE 9A.4–16A CONTROL BUILDING FIRE PROTECTION AT ELEVATION 17150 mm

Contains Security-Related Information - Withheld Under 10 CFR 2.390

FIGURE 9A.4–16B CONTROL BUILDING FIRE PROTECTION AT ELEVATION 22200 MM

Contains Security-Related Information - Withheld Under 10 CFR 2.390

FIGURE 9A.4-17 TURBINE BUILDING FIRE PROTECTION, SECTION A-A

Contains Security-Related Information - Withheld Under 10 CFR 2.390

Figure 9A.4-18 TURBINE BUILDING FIRE PROTECTION AT ELEVATION 5300mm
21-574

Contains Security-Related Information - Withheld Under 10 CFR 2.390

Figure 9A.4-19 TURBINE BUILDING FIRE PROTECTION AT ELEVATION 12300mm

Contains Security-Related Information - Withheld Under 10 CFR 2.390

Figure 9A.4-20 TURBINE BUILDING FIRE PROTECTION AT ELEVATION 20300mm
21-576

Contains Security-Related Information - Withheld Under 10 CFR 2.390

Figure 9A.4.21 TURBINE BUILDING, FIRE PROTECTION AT ELEVATION 30300mm

Contains Security-Related Information - Withheld Under 10 CFR 2.390

Figure 9A.4-28 RADWASTE BUILDING FIRE PROTECTION, SECTION A-A

Contains Security-Related Information - Withheld Under 10 CFR 2.390

FIGURE 9A.4-29 RADWASTE BUILDING FIRE PROTECTION AT EL -1500 mm

Contains Security-Related Information - Withheld Under 10 CFR 2.390

Figure 9A.4-30 RADWASTE BUILDING FIRE PROTECTION AT ELEVATION 4800mm

Contains Security-Related Information - Withheld Under 10 CFR 2.390

Figure 9A.4-31 RADWASTE BUILDING FIRE PROTECTION AT ELEVATION 12300mm

Contains Security-Related Information - Withheld Under 10 CFR 2.390

Figure 9A.4-32 RADWASTE BUILDING FIRE PROTECTION AT ELEVATION 21000mm

21-582

Contains Security-Related Information - Withheld Under 10 CFR 2.390

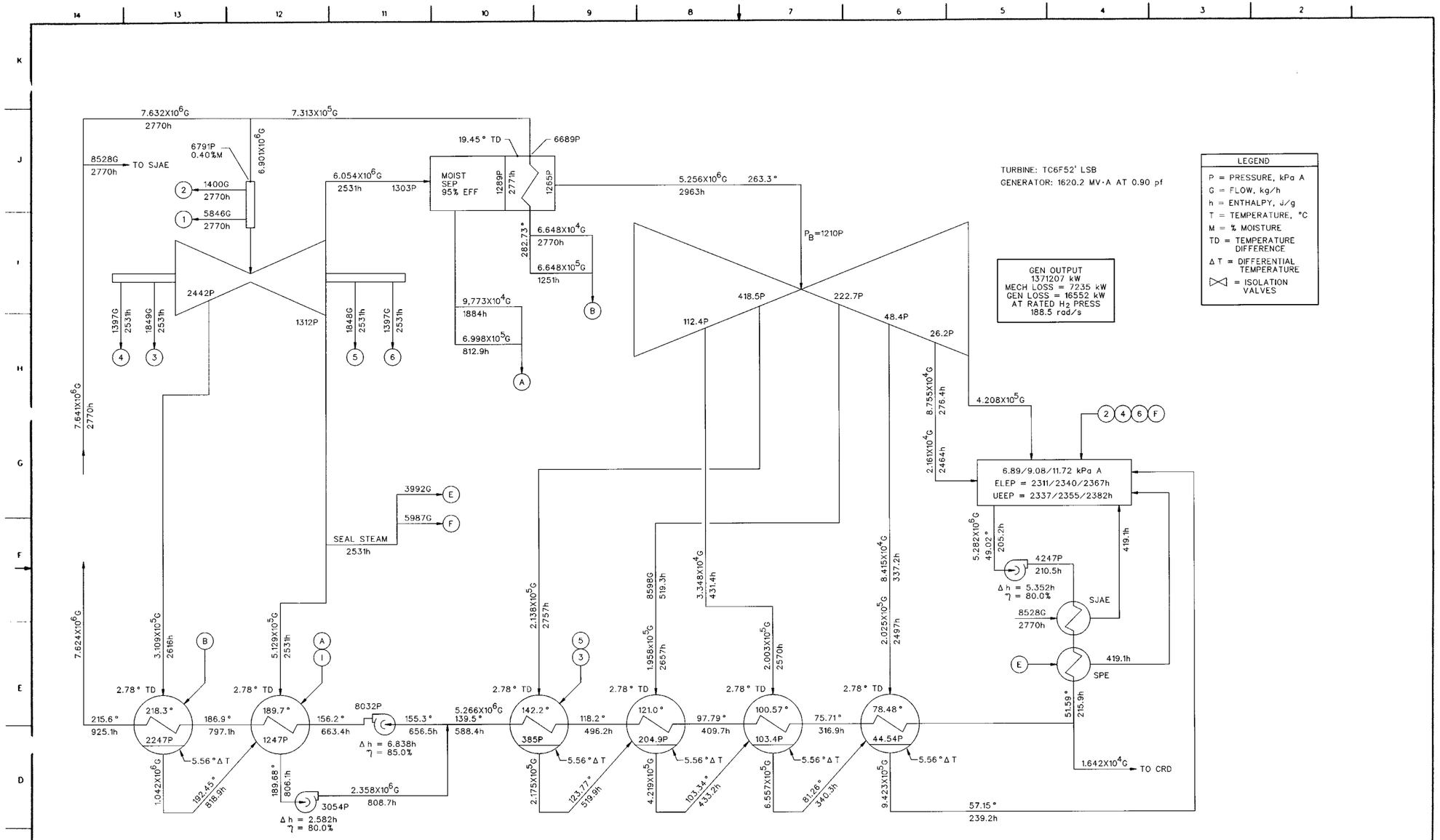

$$THR = \frac{7.624X10^6(2770-925.1) + 1.642X10^4(2770-215.9)}{1371207} = 10289\ J/W\cdot h$$

RATED MWt HEAT BALANCE (3919 MWt)
"NET" OUTPUT = 1345425 kW

REFERENCE HEAT BALANCE FOR GUARANTEED REACTOR RATING

MPL NO N31-3030

FIGURE 10.1-2 REFERENCE HEAT BALANCE FOR GUARANTEED REACTOR RATING

21-583

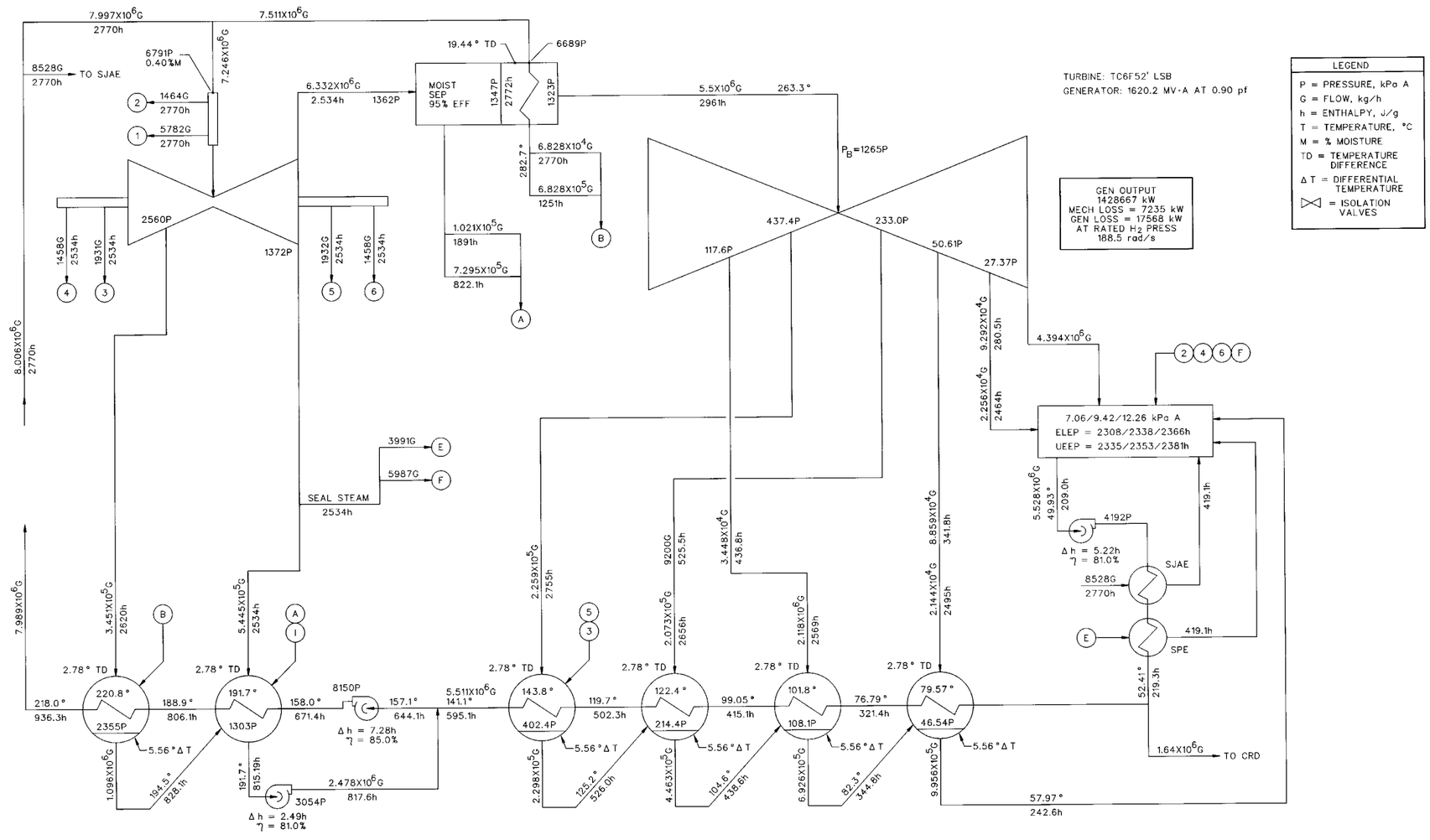

$$THR = \frac{7.989X10^6(2770-936.3) + 1.64X10^4(2770-219.3)}{1428667} = 10283\ J/W\cdot h$$

VWO HEAT BALANCE (4081.1 MWt)
"NET" OUTPUT = 1400873 kW

REFERENCE HEAT BALANCE FOR VALVES-WIDE-OPEN (VWO)

FIGURE 10.1-3 REFERENCE HEAT BALANCE FOR VALVES-WIDE-OPEN (VWO)

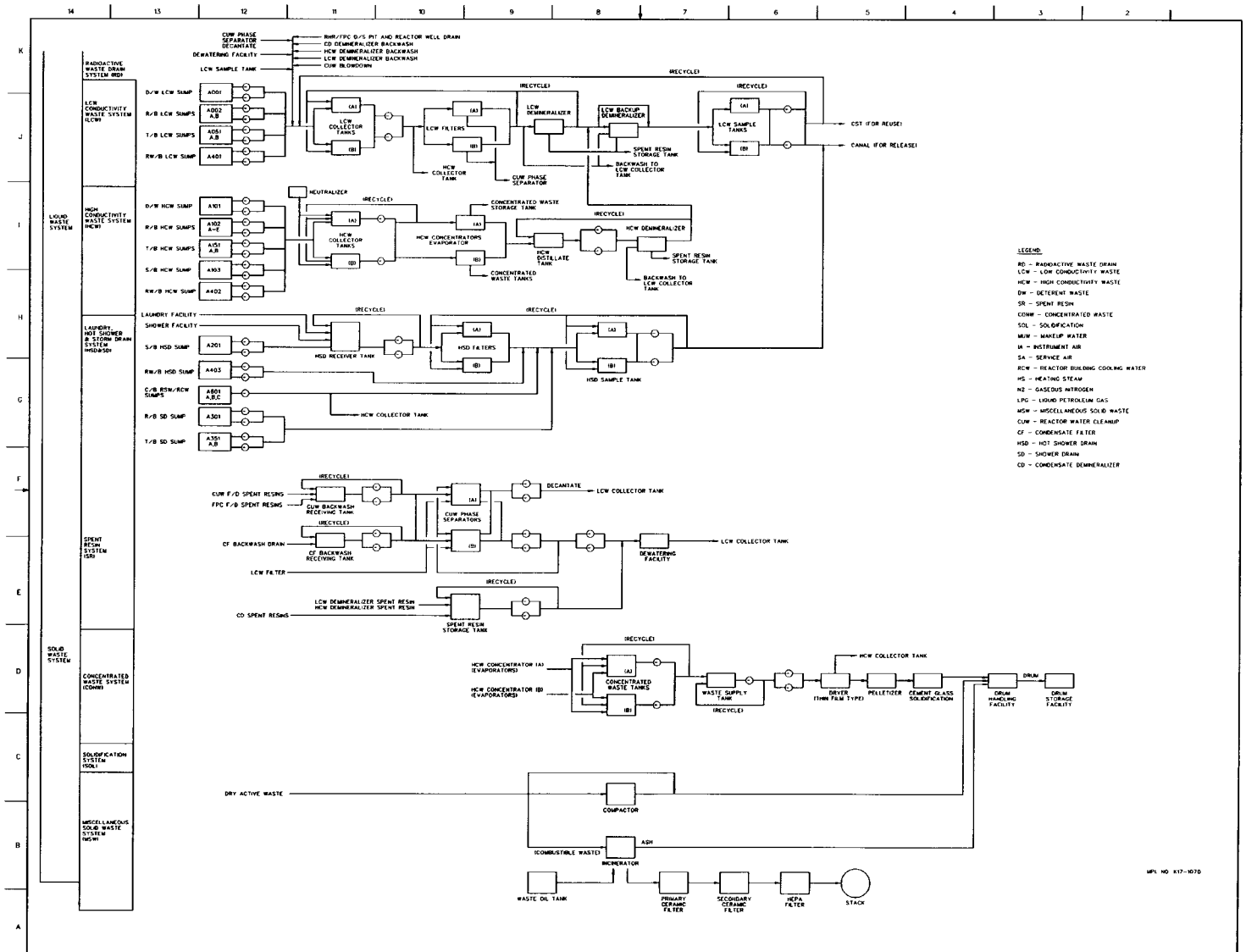

FIGURE 11.2-1 RADWASTE SYSTEM

21-584.1

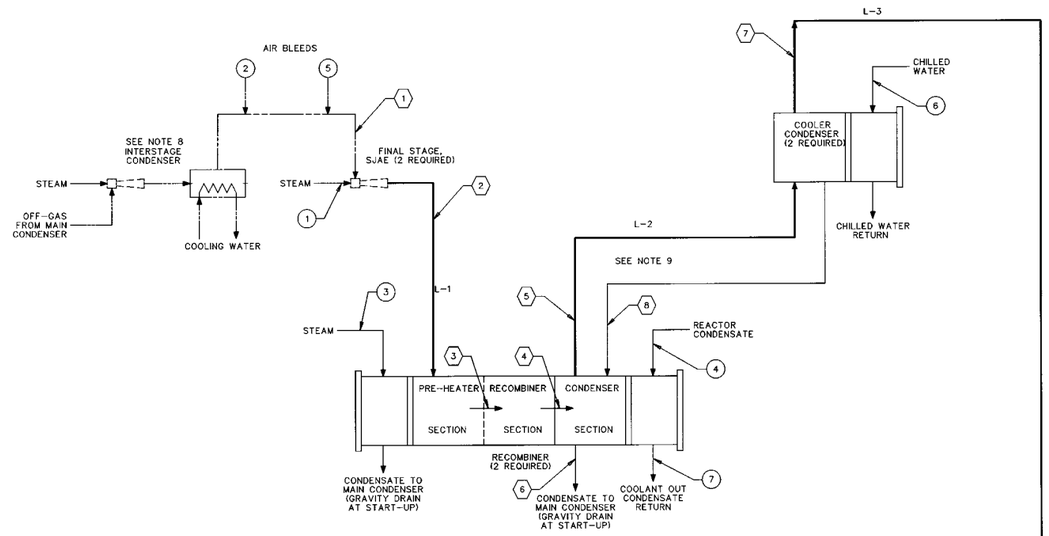

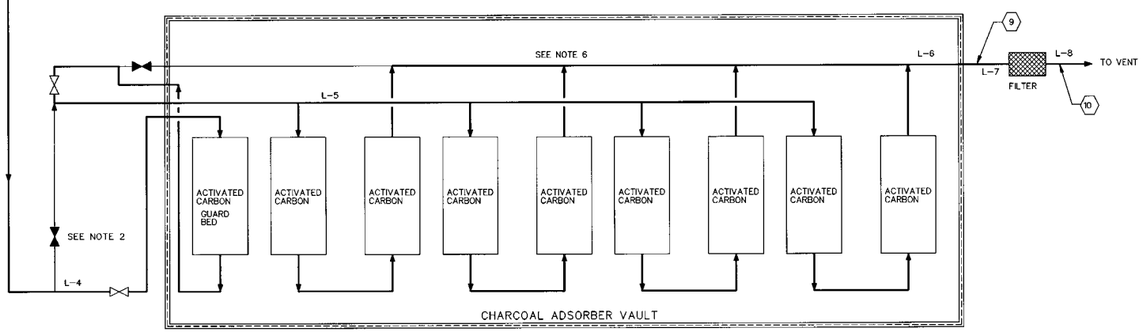

NOTES:

1. USE COMPRESSED AIR FOR PRE-STARTUP, SYSTEM PURGING, AND MINIMUM AIR MAKEUP. SUPPLY AIR TO BE OIL FREE , DERIVED FROM A NON-OIL LUBRICATED COMPRESSOR.
2. GUARD BED BYPASSED ONLY IF IT GETS WET OR CATCHES FIRE.
3. FOR M-CYCLE FORWARD PUMPED PLANT, CONDENSATE SHUTOFF PRESSURE: 1.22 MPa, DESIGN PRESSURE: 2.41 MPa. CONDENSATE FLOW RATE TO OFFGAS CONDENSERS SHALL BE ADEQUATE TO ALLOW BOTH RECOMBINER TRAINS TO OPERATE AT THE SAME TIME.
4. USE NUCLEAR STEAM FOR NORMAL OPERATION AND STARTUP. SIZE PREHEATER AND OFFGAS CONDENSER SECTIONS OF RECOMBINER FOR 115% OF STEAM FLOW.
5. REFER TO MPL #A62-4100 FOR N-16 AND O-19 ACTIVITY AT THE REACTOR NOZZLE.
6. CHARCOAL ADSORBER BED SYSTEM DIFFERENTIAL PRESSURE AT NORMAL AND STARTUP BASED ON A GUARD BED ADSORBER VESSEL FOLLOWED BY 4 PARALLEL TRAINS OF TWO ADSORBER VESSELS IN SERIES. EACH ADSORBER IN 2.13 m IN DIAMETER PACKED WITH 8-16 MESH CHARCOAL EVENLY DISTRIBUTED WITHIN THE NINE VESSESL TO PROVIDE A TOTAL EFFECTIVE, (LOCATED BETWEEN THE TOP AND BOTTOM DISCHARGE DEVICES), CHARGE OF 102.1 MT.
7. EJECTOR TO BE PROVIDED TO PERFORM AGAINST 0.046 MPa BACK PRESSURE AT CITED STARTUP AIR RATE TO ASSURE PROCESS FLEXIBILITY. SUB-SYSTEM DIFFERENTIAL PRESSURE TO BE MAINTAINED AS SHOWN IN TABLES. LINE SIZES ARE PRELININARY AND MAY NEED TO BE ADJUSTED.
8. STEAM JET AIR EJECTOR (EQUIPMENT TO THE EXIT OF THE FINAL STAGE), TO BE FURNISHED BY OTHERS.
9. PROCESS STREAMS (5) AND (8) ARE PHYSICALLY LOCATED IN THE SAME PROCESS PIPE.

SUPPLEMENTAL DOCUMENTS UNDER THE FOLLOWING IDENTITIES ARE TO BE USED IN CONJUNCTION WITH THIS DOCUMENT:

	REFERENCE DESIGNATOR
1. OFF GAS SYSTEM P&ID	N62-1010
2. RADIOLYTIC GAS GENERATION	A62-4450
3. RADIATION SOURCES	A62-4100

DESIGN BASIS:

3.7 GBq/s CE 1971 SOURCE TERM DOC GAS MIXTURE AFTER 30 MINUTES DECAY.
37.7°C CHARCOAL TEMPERATURE.
50.1 m^3/h AT STANDARD ATMOSPHERE AIR FLOW AT NORMAL OPERATION.
424.8 m^3/h AT STANDARD ATMOSPHERE AIR FLOW DURING START-UP OPERATION.
(STANDARD CUBIC METER AT 15.6°C AND 0.101 MPa A)

	STREAM NUMBER		(1)	(2)	(3)	(4)	(5)	(6)	(7)
	STREAM DESCRIPTION		DISCH. FROM INTERMEDIATE STAGE OF SJAE	STEAM DILUTED OFFGAS	PREHEATER DISCHARGE	RECOMBINER DISCHARGE	CONDENSER DISCHARGE	CONDENSER CONDENSATE	CHARCOAL BED FEED
NORMAL OPERATION 100% POWER	FLOW RATAE, POUNDS PER HOUR kg/h	AIR	62.47	62.47	62.47	62.47	62.47	0.	62.47
		HYDROGEN (RADIOLYTIC ONLY)	16.42	16.42	16.42	0.005	0.005	0.	0.005
		OXYGEN (RADIOLYTIC ONLY)	131.36	131.36	131.36	0.04	0.04	0.	0.04
		WATER	323.6	3711.21	3711.21	3859.0	14.77	3958.1	0.02
		TOTAL -	533.85	3921.46	3921.46	3921.46	77.28	3958.1	62.53
	RADIOACTIVITY, MBq/s	RARE GASES, KRYPTON & XENON	4.44E+04	4.44E+04	4.44E+04	4.07E+04	2.78E+04	X.	2.55E+04
		NITROGEN-13 (NOTE 5)	107.08	107.08	107.04	106.93	103.85	X.	102.87
	TEMPERATURE, DEGREES C.		54.4	132.2	176.7	443.5	67.8 (Max)	42.2 (Max)	18.3
	PRESSURE, (NOTE 7) MPa A		0.027	0.113	0.112	0.110	0.104	0.104	0.104
STARTUP OPERATION 5% POWER	FLOW RATE, kg/h	AIR	520.57	520.57	520.57	520.57	520.57	0.	520.57
		HYDROGEN (RADIOLYTIC ONLY)	0.82	0.82	0.82	0.04	0.04	0.	0.04
		OXYGEN (RADIOLYTIC ONLY)	6.57	6.57	6.57	0.29	0.29	0.	0.29
		WATER	414.2	3801.84	3801.84	3808.90	49.32	3802.5	6.35
		TOTAL -	942.16	4329.8	4329.8	4329.8	570.22	3802.5	527.25
	TEMPERATURE, DEGREES C.		54.4	132.2	176.7	189.2	57.2 (Max)	57.2 (Max)	21.1
	PRESSURE (NOTE 7) MPa A		0.027	0.146	0.142	0.140	0.134	0.134	0.133

X. = NO CALCULATIONS PERFORMED

MPL NO: N62-1020

FIGURE 11.3-1 OFFGAS SYSTEM PFD (Sheet 1 of 2)

	STREAM NUMBER		⑧	⑨	⑩
	STREAM DESCRIPTION		COOLER CONDENSER CONDENSATE	CHARCOAL BED DISCHARGE	FILTER DISCHARGE
NORMAL OPERATION	FLOW RATE kg/h	AIR	0.	62.48	62.48
		HYDROGEN (RADIOLYTIC ONLY)	0.	0.005	0.005
		OXYGEN (RADIOLYTIC ONLY)	0.	0.04	0.04
		WATER	13.98	0.80	0.80
		TOTAL –	13.98	63.3	63.3
	RADIOACTIVITY, MBq/s	RARE GASES, KRYPTON & XENON	X.	3.52	3.52
		NITROGEN-13 (NOTE 5)	X.	0.00	0.00
	TEMPERATURE, DEGREES C.		18.3	37.8	37.8
	PRESSURE, (NOTE 7) MPa A		0.104	0.102	0.102
STARTUP OPERATION	FLOW RATE, kg/h	AIR	0.	519.89	519.89
		HYDROGEN (RADIOLYTIC ONLY)	0.	0.036	0.036
		OXYGEN (RADIOLYTIC ONLY)	0.	0.290	0.290
		WATER	42.62	6.34	6.34
		TOTAL –	42.62	526.56	526.56
	TEMPERATURE, DEGREES C.		31.7	45.3	45.3
	PRESSURE, (NOTE 7) MPa A		0.134	0.106	0.103

X. = NO CALCULATIONS PERFORMED

EQUIPMENT SUMMARY – PROCESS STREAM PRESSURE DROP				
PART NO	EQUIPMENT PIECE	DESIGN CONDITIONS		START-UP
		PRESS MPa	TEMP °C	MPa D
D005	MULTIPURPOSE VESSEL	2.41	232.2	0.009
B010	COOLER-CONDENSER	2.41	121.1	0.0008
D012	CHARCOAL ADSORBER	2.41	4.4/121.1	0.014
D016	FILTER	2.41	10.0/121.1	0.003

PIPE LENGTH SUMMARY (1)		
LINE No.	BETWEEN	EQUIVALENT PIPE LENGHT m
L-1	EXIT OF SJAE AND ENTRANCE TO PRE-HEATER SECTION	71
L-2	EXIT OF CONDENSER AND ENTRANCE TO COOLER CONDENSER	1.5
L-3	EXIT OF COOLER CONDENSER AND LINE TO CHARCOAL VAULT	71
L-4	COMMON LINE TEE AND ENTRANCE TO CHARCOAL VAULT	7.1
L-5	ENTRANCE TO CHARCOAL VAULT AND ENTRANCE TO CHARCOAL VESSELS	15
L-6	EXIT OF CHARCOAL VESSELS AND EXIT FROM CHARCOAL VAULT	15
L-7	EXIT OF CHARCOAL VAULT AND ENTRANCE TO FILTER	71
L-8	EXIT OF FILTER TO VENT	91

(1) – EQUIVALENT LENGTHS ARE FOR PIPE, FITTINGS, AND VALVES, BETWEEN POINTS NOTED.

	STREAM NUMBER		①	②	③	④	⑤	⑥
	STREAM DESCRIPTION		DILUTION STEAM (NOTE 4,7)	AIR BLEED (NOTE 1)	PREHEATER STEAM (NOTE 4)	REACTOR CONDENSATE (NOTE 3)	AIR PURGE (NOTE 1)	CHILLED WATER
NORMAL OPERATION	FLOW RATE, kg/h	AIR	0.	12.7	0.	0.	2.04	0.
		HYDROGEN (RADIOLYTIC ONLY)	0.	0.	0.	0.	0.	0.
		OXYGEN (RADIOLYTIC ONLY)	0.	0.	0.	0.	0.	0.
		WATER	3383.2	0.	376.5	0.104E+7	0.	33,883.9
		TOTAL –	3383.2	12.7	376.5	0.104E+7	2.04	33,883.9
	TEMPERATURE, DEGREES C.		170.0	21.1	207.8	56.7 (MAX)	21.1	15.6
	PRESSURE, (NOTE 7) MPa A		0.790	0.173	1.83	0.965	0.173	0.414
STARTUP OPERATION	FLOW RATE, kg/h	AIR	0.	125.2	0.	0.	2.04	0.
		HYDROGEN (RADIOLYTIC ONLY)	0.	0.	0.	0.	0.	0.
		OXYGEN (RADIOLYTIC ONLY)	0.	0.	0.	0.	0.	0.
		WATER	3382.2	0.	376.5	0.34E+06	0.	33,883.9
		TOTAL –	3382.2	125.2	376.5	0.34E+06	2.04	33,883.9
	TEMPERATURE, DEGREES C.		170.0	21.1	207.8	43.3 (MAX)	21.1	15.6
	PRESSURE, (NOTE 7) MPa A		0.790	0.173	1.83	0.965	0.173	0.414

FIGURE 11.3-1 OFFGAS SYSTEM PFD (Sheet 2 of 2)

21-584.3

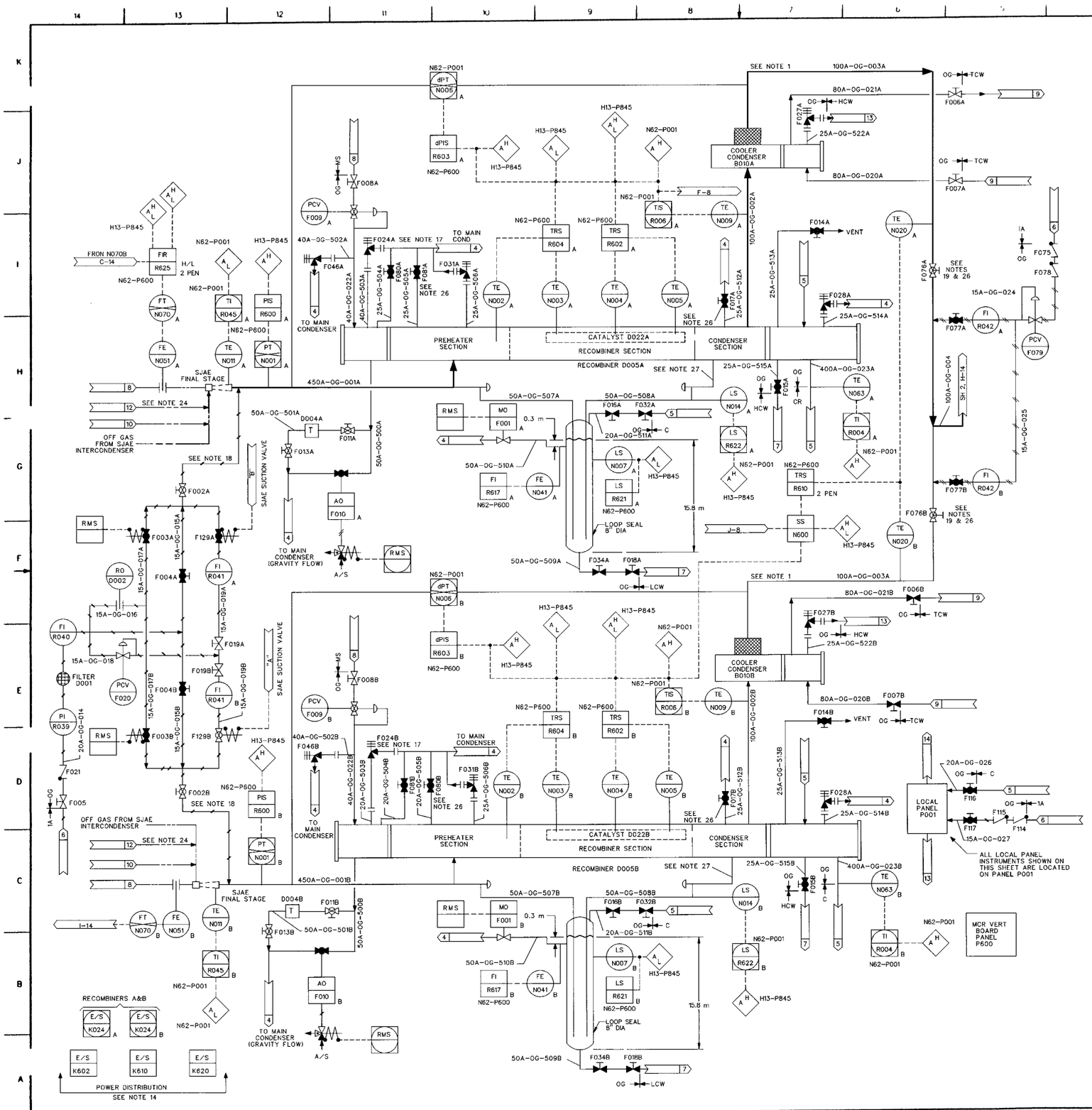

NOTES:

1. INSULATE PIPING FROM STEAM JET AIR EJECTORS UP TO AND INCLUDING THE RECOMBINERS.
2. LINES SHALL HAVE HIGH POINT VENTS AND SHALL BE FULLY DRAINABLE.
3. INSULATE PIPING FROM COOLER CONDENSOR TO CHARCOAL VAULT.
4. INSULATE ALL CHILLED WATER LINES.
5. PIPE FROM AIR EJECTORS TO BE SLOPED SO CONDENSATE DRAINS TOWARD DRAIN LINE.
6. AFTER ANY VALVE CLOSES DUE TO HIGH RADIATION SIGNAL, IT SHALL REMAIN CLOSED UNTIL RESET BY MANUAL SWITCH.
7. SMOKE INJECTION EQUIPMENT OF STANDBY GAS TREATMENT SYSTEM TO BE USED FOR FILTER TESTING (USE HANSEN COUPLINGS).
8. THOSE LINES WITH TWO PRESSURE–TEMPERATURE INTEGRITY CLASSIFICATIONS SHALL CONFORM TO THE LOWER CLASSIFICATION IN STRAIGHT PIPE RUNS AND SHALL CONFORM TO THE HIGH CLASSIFICATION AT ALL STRAIGHT RUN ENDS. A STRAIGHT RUN END INCLUDES BENDS, VALVES AND ANY DISCONTINUITY REDUCING THE DIAMETER 5 PERCENT OR MORE. THE END SHALL INCLUDE THE LAST 3 m OF LINE TO SUCH END OR DISCONTINUITY. IF L/D RATIO OF A PIPE RUN BETWEEN DISCONTINUITIES (E.G. VESSELS, SJAE) IS 7.0, DECREASED DESIGN PRESSURE PERMITS USE OF SCHEDULE 40 PIPING AND 600 POUNDS ANSI RATED FLANGES. THIS RELIEF IS ALSO APPLICABLE TO SHORT PIPE RUNS BETWEEN TWO VESSELS L/D ≤7.0.
9. UNLESS OTHERWISE SPECIFIED, LINE SIZING SHALL BE AS FOLLOWS: (A) INSTRUMENT SENSOR LINES, 18 mm MINIMUM (B) NORMALLY FLOWING PROCESS DRAINS,60 mm MINIMUM (C) VENTS & MAINTENANCE DRAINS, 34 mm MINIMUM. PRE–TREATMENT PROCESS RADIATION MONITORING SAMPLE LINES SHOULD PROVIDE A TWO MINUTE DELAY. POST TREATMENT PROCESS RADIATION MONITORING SAMPLE LINES BE 18 mm MINIMUM AND OF MINIMUM LENGTH.
10. OPERATED VALVES ARE SHOWN IN THEIR POSITION FOR NORMAL OPERATION, AS OPPOSED TO "SHELF" OR "FAILED" POSITION. VALVES SHALL FAIL "AS IS" UNLESS OTHERWISE NOTED.
11. PUMPS SHALL HAVE RUNNING LIGHTS AND OPERATING VALVES SHALL HAVE POSITION INDICATING LIGHTS LOCATED WITH THE RMS.
12. DELETED
13. LINE SIZES REPRESENT A TRIAL PRESSURE DROP. LINES SHALL BE SIZED TO CONFORM TO PROCESS DATA REQUIREMENTS OF OFF GAS SYSTEM PROCESS DIAGRAM AND DATA SHEET.
14. EACH TRAIN SHALL HAVE AN INDEPENDENT POWER SUPPLY.
15. ALL MPL ITEM NO'S ARE PREFIXED BY SYSTEM MPL NO. #N62 UNLESS OTHERWISE NOTED.
16. ALL PROCESS INSTRUMENT SHALL BE PROVIDED WITH ISOLATION VALVES AS REQUIRED BY REFERENCE SUPPLEMENTAL DOCUMENT 3.
17. RECOMBINER VESSEL RELIEF VALVES ARE SIZED TO RELIEVE ONLY THE THERMAL EXPANSION OF LIQUID WATER IF VESSEL IS FLOODED.
18. THE 51, 10.2 & 1.7 m^3/h AT STANDARD ATMOSPHERE AIR BLEED LINES SHALL BE CONNECTED TO THE PROCESS IMMEDIATELY DOWNSTREAM OF EACH STEAM DILUTION SJAE.
19. MAINTENANCE ISOLATION VALVES AND AIR BLEEDS SHALL BE LOCATED AT LEAST 5 DIAMETERS FROM THE PROCESS TEE.
20. RECOMBINER TRAIN "B" IS SHOWN IN STANDBY MODE WITH 1.7 m^3/h AT STANDARD ATMOSPHERE CONTINUAL AIR BLEED ENTERING THE PROCESS LINE USPREEAM OF THE RECOMBINER VESSEL.
21. HYDROGEN ANALYZER LINES SHALL BE HEAT–TRACED TO PREVENT CONDENSATION.
22. DELETED
23. A COMMON MOISTURE DROP–OUT CHAMBER, EMPLOYING AVAILABLE COOLING EQUIPMENT OR SOURCE, SHALL BE PROVIDED HERE TO PRE–TREAT THE GAS SAMPLED BY THE HYDROGEN ANALYZERS AND THE PROCESS RADIATION MONITORING SYSTEM.
24. OXYGEN INJECTION CONNECTION FOR HYDROGEN WATER CHEMISTRY SYSTEM.
25. LINES TO OXYGEN ANALYZERS PROVIDED FOR HYDROGEN WATER CHEMISTRY SYSTEM.
26. VALVE TO BE EITHER DOUBLE STEM SEAL WITH AIR BLOCK OR BELLOWS SEAL.
27. LINE TO DRAIN BY GRAVITY FROM RECOMBINER TO MAIN CONDENSER.

SUPPLEMENTAL DOCUMENTS UNDER THE FOLLOWING IDENTITIES ARE TO BE USED IN CONJUNCTION WITH THIS DRAWING.

	REFERENCE DESIGNATOR
1. PRESSURE INTEGRITY OF NUCLEAR COMPONENTS	A11–3010
2. PIPING & INSRUMENT SYMBOLS	A10–3030
3. PROCESS INSTRUMENTATION DESIGN SPECIFICATION	A11–3024
4 MAIN CONDENSER SYS P&ID	N61–1010
5 CONDENSATE SYS P&ID	N21–1010
6 INSTRUMENT AIR SYS P&ID	P52–1010
7 LOW CONDUCTIVITY WASTE SYS P&ID	K12–1010
8. TURBINE MAIN STEAM SYS P&ID	N11–1010
9. TURB BLDG CHILLED WATER SYS P&ID	P22–1010
10. PROCESS RAD MONITORING SYS P&ID	D11–1010
11. HIGH PRESSURE NITROGEN GAS SUPPLY SYS P&ID	P54–1010
12. OXYGEN INJECTION SYS P&ID	P32–1010
13. HIGH CONDUCTIVITY WASTE SYS P&ID	K13–1010
14. HEATING,VENTILATING & AIR CONDITIONING SYS P&ID	U41–1010

FIGURE 11.3–2 OFFGAS SYSTEM P&ID (Sheet 1 of 3)

ABWR DCD/Tier 2 *Rev. 5* 25A5675BJ *21–584.4*

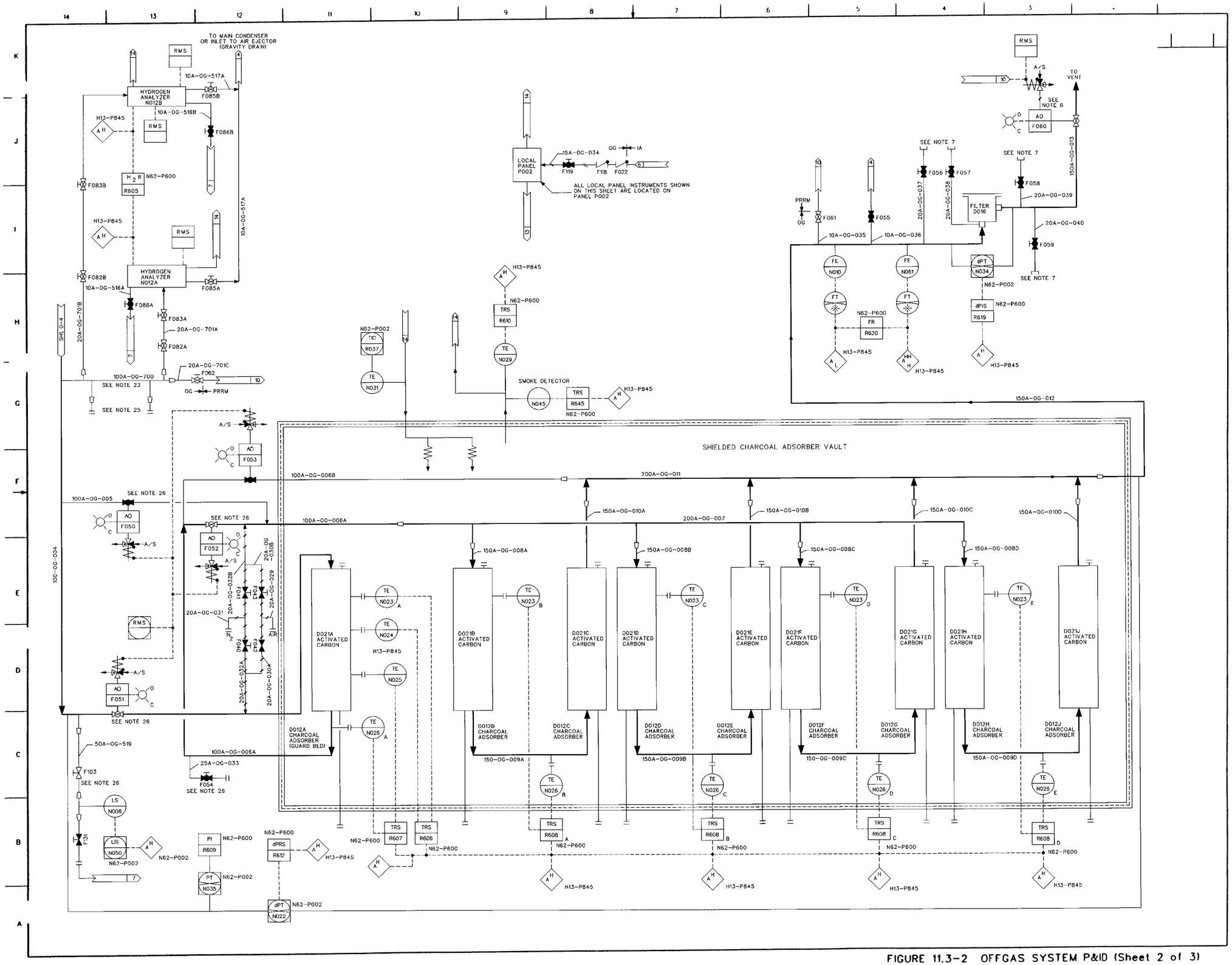

FIGURE 11.3-2 OFFGAS SYSTEM P&ID (Sheet 2 of 3)

TABLE I: MAIN CONTROL ROOM ANNUNCIATOR ALARMS

FUNCTION	PRIMARY SENSOR	SET POINT
DILUTION STEAM FLOW	FE-N051	AH 110% AL 95%
PREHEATER INLET PRESSURE	PT-N001	AH 0.046 MPa
RECOMBINER INLET TEMPERATURE	TE-N002,N003	AL 149 °C
RECOMBINER TEMPERATURE PROFILE	TE-N004,N005	AH 443 °C AL 149 °C
CONDENSER LOOP SEAL WATER LEVEL	LS-N007	AL -0.3 m
CONDENSER DRAIN LINE WATER LEVEL	LS-N014	AH 0.5 m
HYDROGEN ANALYZER	HZE-N012	AH 2%
COOLER CONDENSER EXIT TEMPERATURE	TE-N020	AH 21.7 °C
PREHEATER TO COOLER CONDENSER EXIT PRESSURE DROP	dPT-N006	AH 0.011 MPa
CHARCOAL ADSORBER PRESSURE DROP	dPT-N022	AH 0.015 MPa
CHARCOAL VESSEL TEMPERATURE	TE-N023,N026	AH 34.4 °C
CHARCOAL VAULT AIR TEMPERATURE	TE-N029	AL 26.7 °C AH 43.3 °C
CHARCOAL VAULT SMOKE LEVEL	N045	----
AFTER FILTER PRESSURE DROP	dPT-N034	AH 12cm W.G.
PROCESS FLOW (AT STANDARD ATMOSPHERE)	FE-N010,N061	AL 10.2 m^3/h AH 68 m^3/h AHH 425 m^3/h

TABLE II: PIPING SPECIFICATIONS

PIPE No.	SCHEDUAL	MATERIAL	FLUID
001A-B	160	CS	S
002A-B	160	CS	A,W
003A-B	80	CS	A
004	80	CS	A
005A	80	CS	A
006A-B	80	CS	A
007	80	CS	A
008A-D	80	CS	A
009A-D	80	CS	A
010A-D	80	CS	A
011	80	CS	A
012	80	CS	A
013	80	CS	A
014	40	CS	A
015A-B	40	CS	A
016	40	CS	A
017A-B	40	CS	A
018	40	CS	A
019A-B	40	CS	A
020A-B	40	CS	W
021A-B	40	CS	W
022A-B	160	CS	S
023A-B	100	CS	W
024	40	CS	A
025	40	CS	A
026	40	CS	W
027	40	CS	A
028	80	CS	A
029	40	CS	A
030A-B	160	CS	A
031	40	CS	N
032A-B	160	CS	N
033	160	CS	A
034	160	CS	A
035	80	CS	A
036	80	CS	A
037	80	CS	A
038	80	CS	A
039	80	CS	A
040	80	CS	A
500A-B	160	CS	W
501A-B	160	CS	W
502A-B	160	CS	S
503A-B	160	CS	S,A
504A-B	160	CS	A
505A-B	160	CS	A
506A-B	160	CS	A
507A-B	160	CS	W
508A-B	160	CS	W
509A-B	80	CS	W
510A-B	160	CS	W
511A-B	160	CS	W
512A-B	160	CS	A
513A-B	160	CS	A
514A-B	80	CS	A,W
515A-B	40	CS	W
516A-B	40	SS	W
517A-B	40	SS	A
518	160	CS	W
519	160	CS	W
700	40	SS	A
701A-B	40	SS	A

FIGURE 11.3-2 OFFGAS SYSTEM P&ID (Sheet 3 of 3)

FIGURE 12.3–1 REACTOR BUILDING RADIATION ZONE MAP FOR FULL POWER AND SHUTDOWN OPERATION AT ELEVATION –8200mm

Contains Security-Related Information - Withheld Under 10 CFR 2.390

FIGURE 12.3–2 REACTOR BUILDING RADIATION ZONE MAP FOR FULL POWER AND SHUTDOWN OPERATION AT ELEVATION –1700mm

Contains Security-Related Information - Withheld Under 10 CFR 2.390

FIGURE 12.3–3 REACTOR BUILDING RADIATION ZONE MAP FOR FULL POWER AND SHUTDOWN OPERATION AT ELEVATION 4800/8500mm

Contains Security-Related Information - Withheld Under 10 CFR 2.390

FIGURE 12.3–5 REACTOR BUILDING RADIATION ZONE MAP FOR FULL POWER AND SHUTDOWN OPERATION AT ELEVATION 12300 mm

Contains Security-Related Information - Withheld Under 10 CFR 2.390

FIGURE 12.3–6 REACTOR BUILDING RADIATION ZONE MAP FOR FULL POWER AND SHUTDOWN OPERATION AT ELEVATION 18100 mm

Contains Security-Related Information - Withheld Under 10 CFR 2.390

FIGURE 12.3–7 REACTOR BUILDING RADIATION ZONE MAP FOR FULL POWER AND SHUTDOWN OPERATION AT ELEVATION 23500 mm

Contains Security-Related Information - Withheld Under 10 CFR 2.390

FIGURE 12.3–8 REACTOR BUILDING RADIATION ZONE MAP FOR FULL POWER AND SHUTDOWN OPERATION AT ELEVATION 27200 mm

Contains Security-Related Information - Withheld Under 10 CFR 2.390

FIGURE 12.3-9 REACTOR BUILDING RADIATION ZONE MAP FOR FULL POWER AND SHUTDOWN OPERATION AT ELEVATION 31700/38200 mm

Contains Security-Related Information - Withheld Under 10 CFR 2.390

Figure 12.3-10 REACTOR BUILDING RADIATION ZONE MAP FOR FULL POWER AND SHUTDOWN OPERATION, SECTION A-A

21-593

Contains Security-Related Information - Withheld Under 10 CFR 2.390

Figure 12.3-11 REACTOR BUILDING RADIATION ZONE MAP FOR FULL POWER AND SHUTDOWN OPERATION, SECTION B-B

21 594

Contains Security-Related Information - Withheld Under 10 CFR 2.390

FIGURE 12.3–12 REACTOR BUILDING, RADIATION ZONE MAP POST–LOCA AT ELEVATION –8200 mm

Contains Security-Related Information - Withheld Under 10 CFR 2.390

FIGURE 12.3–13 REACTOR BUILDING, RADIATION ZONE MAP POST–LOCA AT ELEVATION –1700 mm

Contains Security-Related Information - Withheld Under 10 CFR 2.390

FIGURE 12.3-14 REACTOR BUILDING, RADIATION ZONE MAP POST-LOCA AT ELEVATION 4800/8500mm

Contains Security-Related Information - Withheld Under 10 CFR 2.390

FIGURE 12.3–16 REACTOR BUILDING, RADIATION ZONE MAP POST–LOCA AT ELEVATION 12300 mm

Contains Security-Related Information - Withheld Under 10 CFR 2.390

FIGURE 12.3–17 REACTOR BUILDING, RADIATION ZONE MAP POST–LOCA AT ELEVATION 18100 mm

Contains Security-Related Information - Withheld Under 10 CFR 2.390

FIGURE 12.3–18 REACTOR BUILDING, RADIATION ZONE MAP POST–LOCA AT ELEVATION 23500 mm

Contains Security-Related Information - Withheld Under 10 CFR 2.390

FIGURE 12.3–19 REACTOR BUILDING, RADIATION ZONE MAP POST–LOCA AT ELEVATION 27200 mm

Contains Security-Related Information - Withheld Under 10 CFR 2.390

FIGURE 12.3–20 REACTOR BUILDING, RADIATION ZONE MAP POST–LOCA AT ELEVATION 31700/38200 mm

Contains Security-Related Information - Withheld Under 10 CFR 2.390

Figure 12.3-21 REACTOR BUILDING RADIATION ZONE MAP POST LOCA, SECTION A-A

21-603

Contains Security-Related Information - Withheld Under 10 CFR 2.390

Figure 12.3-22 REACTOR BUILDING RADIATION ZONE MAP POST LOCA, SECTION B-B

21 604

Contains Security-Related Information - Withheld Under 10 CFR 2.390

Figure 12.3-37 RADWASTE BUILDING, RADIATION ZONE MAP, NORMAL OPERATION AT ELEVATION -1500mm

21-606

Contains Security-Related Information - Withheld Under 10 CFR 2.390

Figure 12.3-38 RADWASTE BUILDING, RADIATION ZONE MAP, NORMAL OPERATION AT ELEVATION −4800mm

21-607

Contains Security-Related Information - Withheld Under 10 CFR 2.390

Figure 12.3-39 RADWASTE BUILDING, RADIATION ZONE MAP, NORMAL OPERATION AT ELEVATION 12300mm

21-608

Contains Security-Related Information - Withheld Under 10 CFR 2.390

Figure 12.3-40 RADWASTE BUILDING, RADIATION ZONE MAP, NORMAL OPERATION AT ELEVATION 21000mm

21-609

Contains Security-Related Information - Withheld Under 10 CFR 2.390

Figure 12.3-41 RADWASTE BUILDING, RADIATION ZONE MAP, NORMAL OPERATION SECTION A-A

21-610

Contains Security-Related Information - Withheld Under 10 CFR 2.390

Figure 12.3-42 CONTROL BUILDING, RADIATION ZONE, NORMAL OPERATION AT ELEVATION -8200 mm

Contains Security-Related Information - Withheld Under 10 CFR 2.390

FIGURE 12.3-43 CONTROL AND SERVICE BUILDING, RADIATION ZONE, NORMAL OPERATION AT ELEVATION -2150mm

21-612

Contains Security-Related Information - Withheld Under 10 CFR 2.390

Figure 12.3-44 CONTROL BUILDING, RADIATION ZONE, NORMAL OPERATIONS AT FLOOR LEVEL TMSL 3500mm

21-613

Contains Security-Related Information - Withheld Under 10 CFR 2.390

Figure 12.3-45 CONTROL BUILDING RADIATION ZONE, NORMAL OPERATION, AT ELEVATION 7900mm

21-614

Contains Security-Related Information - Withheld Under 10 CFR 2.390

FIGURE 12.3–46 CONTROL, CB ANNEX, AND SERVICE BUILDING RADIATION ZONE NORMAL OPERATION AT ELEVATION 12300 mm

Contains Security-Related Information - Withheld Under 10 CFR 2.390

FIGURE 12.3-47 CONTROL, CB ANNEX, AND SERVICE BUILDING RADIATION ZONE NORMAL OPERATION AT ELEVATION 17150 mm

Contains Security-Related Information - Withheld Under 10 CFR 2.390

FIGURE 12.3-48 CONTROL, CB ANNEX, AND SERVICE BUILDING RADIATION ZONE NORMAL OPERATION SECTION B-B

Contains Security-Related Information - Withheld Under 10 CFR 2.390

Figure 12.3-49 TURBINE BUILDING RADIATION ZONE AT ELEVATION 5300mm
21-618

Contains Security-Related Information - Withheld Under 10 CFR 2.390

Figure 12.3-50 TURBINE BUILDING, RADIATION ZONE AT ELEVATION 12300mm

21-619

Contains Security-Related Information - Withheld Under 10 CFR 2.390

Figure 12.3-51 TURBINE BUILDING, RADIATION ZONE AT ELEVATION 20300mm

21-620

Contains Security-Related Information - Withheld Under 10 CFR 2.390

Figure 12.3-52 TURBINE BUILDING, RADIATION ZONE AT ELEVATION 30300mm

21-621

Contains Security-Related Information - Withheld Under 10 CFR 2.390

Contains Security-Related Information - Withheld Under 10 CFR 2.390

Figure 12.3-53 TURBINE BUILDING, RADIATION ZONE AT NORMAL OPERATION LONGITUDINAL SECTION A-A

21-677

FIGURE 12.3-54 CONTROL, CB ANNEX, AND SERVICE BUILDING RADIATION ZONE, POST LOCA SECTION B-B

Contains Security-Related Information - Withheld Under 10 CFR 2.390

Figure 12.3-55 TURBINE BUILDING, RADIATION ZONE, POST-LOCA, LONGITUDINAL SECTION A-A

21-624

Contains Security-Related Information - Withheld Under 10 CFR 2.390

FIGURE 12.3–56 REACTOR BUILDING, AREA RADIATION MONITORS AT ELEVATION –8200 mm

Contains Security-Related Information - Withheld Under 10 CFR 2.390

FIGURE 12.3–57 REACTOR BUILDING AREA RADIATION MONITORS AT ELEVATION –1700 mm

Contains Security-Related Information - Withheld Under 10 CFR 2.390

FIGURE 12.3–58 REACTOR BUILDING AREA RADIATION MONITORS AT ELEVATION 4800/8500mm

Contains Security-Related Information - Withheld Under 10 CFR 2.390

FIGURE 12.3–59 REACTOR BUILDING AREA RADIATION MONITORS AT ELEVATION 12300 MM

Contains Security-Related Information - Withheld Under 10 CFR 2.390

FIGURE 12.3–60 REACTOR BUILDING AREA RADIATION MONITORS AT ELEVATION 23500 mm

Contains Security-Related Information - Withheld Under 10 CFR 2.390

FIGURE 12.3–61 REACTOR BUILDING AREA RADIATION MONITORS AT ELEVATION 27200 mm

Contains Security-Related Information - Withheld Under 10 CFR 2.390

FIGURE 12.3–62 REACTOR BUILDING AREA RADIATION MONITORS AT ELEVATION 31700/38200 mm

Contains Security-Related Information - Withheld Under 10 CFR 2.390

Figure 12.3-63 REACTOR BUILDING AREA RADIATION MONITORS SECTION B-B

Contains Security-Related Information - Withheld Under 10 CFR 2.390

FIGURE 12.3-64 CONTROL, CB ANNEX, & SERVICE BUILDING, AREA RADIATION MONITORS

Contains Security-Related Information - Withheld Under 10 CFR 2.390

Figure 12.3-65 RADWASTE BUILDING, AREA RADIATION MONITOR AT ELEVATION -1500mm

Contains Security-Related Information - Withheld Under 10 CFR 2.390

Contains Security-Related Information - Withheld Under 10 CFR 2.390

FIGURE 12.3-66 RADWASTE BUILDING, AREA RADIATION MONITOR, ELEVATION 4800mm

FIGURE 12.3-67 RADWASTE BUILDING, AREA RADIATION MONITOR, ELEVATION 12300mm

Contains Security-Related Information - Withheld Under 10 CFR 2.390

FIGURE 12.3–68 RADWASTE BUILDING, AREA RADIATION MONITOR, ELEVATION 21000mm

Contains Security-Related Information - Withheld Under 10 CFR 2.390

Figure 12.3-70 TURBINE BUILDING, GRADE LEVEL 2, AREA RADIATION MONITOR, ELEVATION 12300mm

21-638

Contains Security-Related Information - Withheld Under 10 CFR 2.390

Figure 12.3-71 TURBINE BUILDING, LEVEL 3, AREA RADIATION MONITOR, ELEVATION 20300mm
21-639

Contains Security-Related Information - Withheld Under 10 CFR 2.390

Figure 12.3-72 TURBINE BUILDING, LEVEL 4, AREA RADIATION MONITOR, ELEVATION 30300mm

21-640

Contains Security-Related Information - Withheld Under 10 CFR 2.390

Figure 12.3-73 TURBINE BUILDING, AREA RADIATION MONITOR, LONGITUDINAL SECTION A-A

21-641

Contains Security-Related Information - Withheld Under 10 CFR 2.390

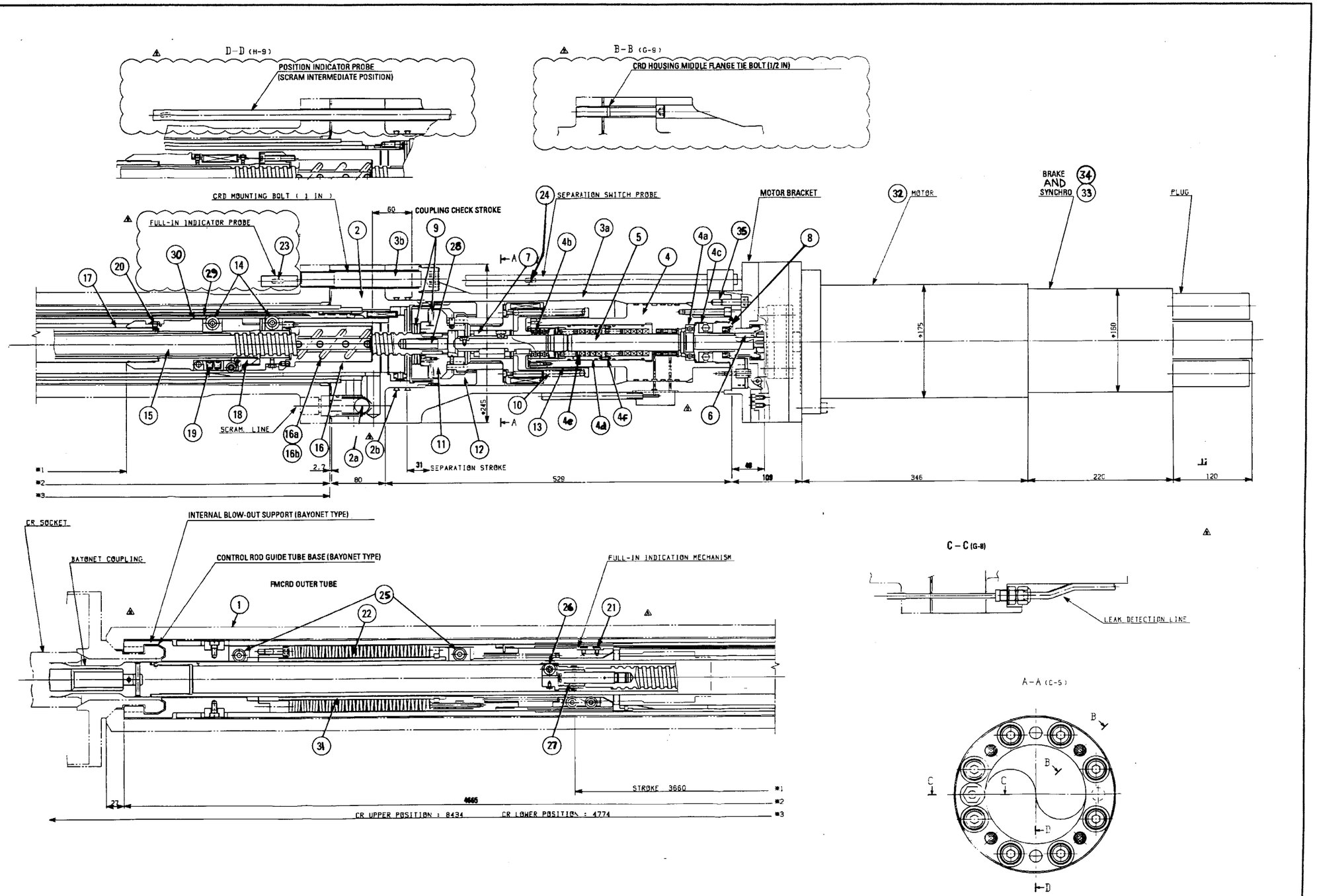

Figure 15B-3 FINE MOTION CONTROL ROD DRIVE

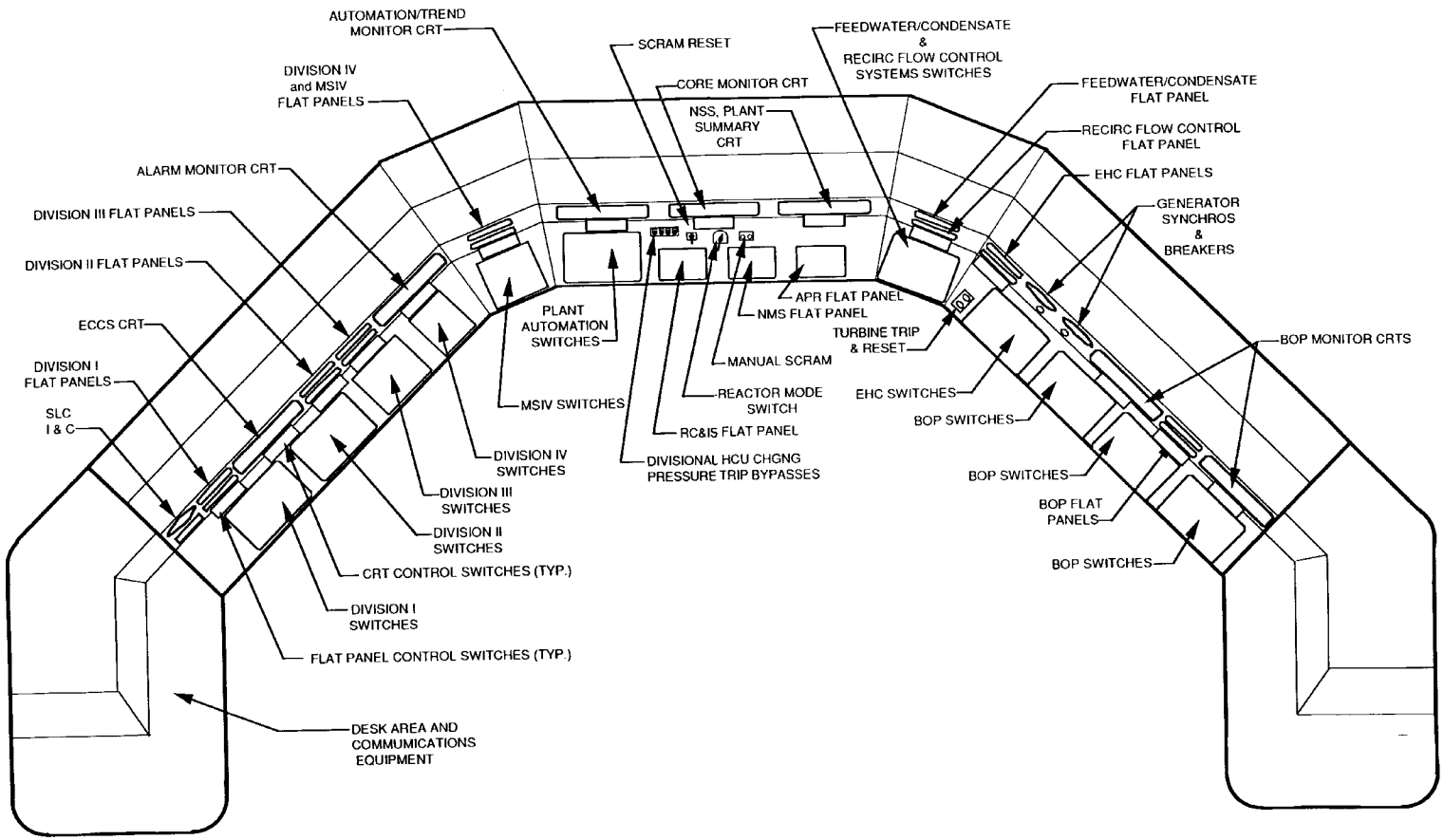

Figure 18C-5 ARRANGMENT OF EQUIPMENT ON MAIN CONTROL CONSOLE

21-643

FIXED-POSITION DISPLAY

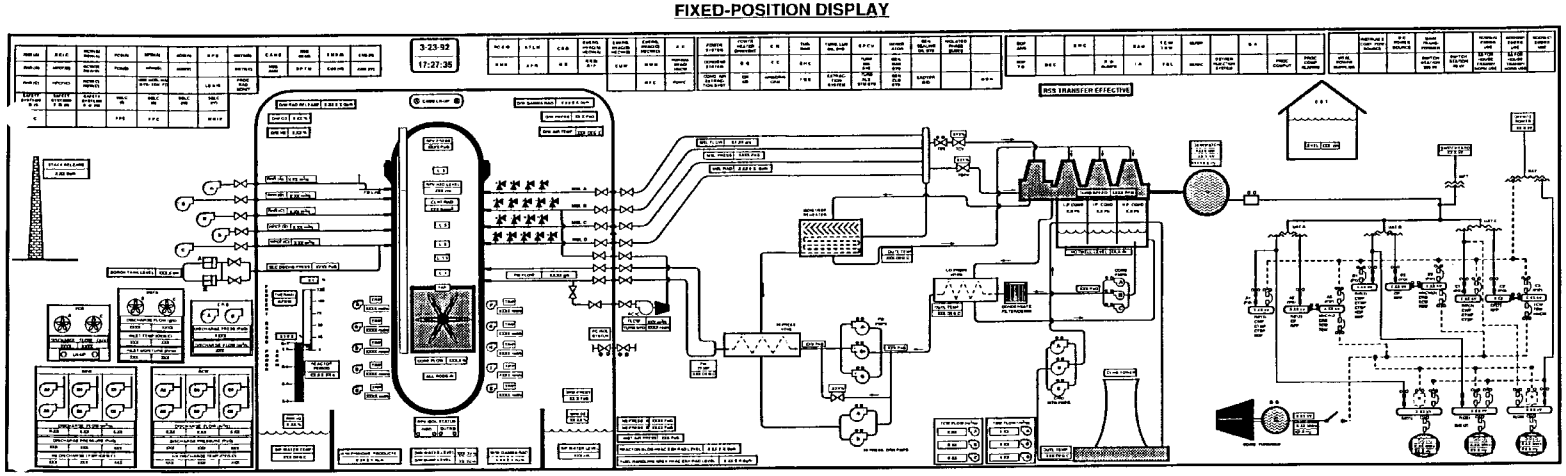

Figure 18C-7 FIXED-POSITION DISPLAY

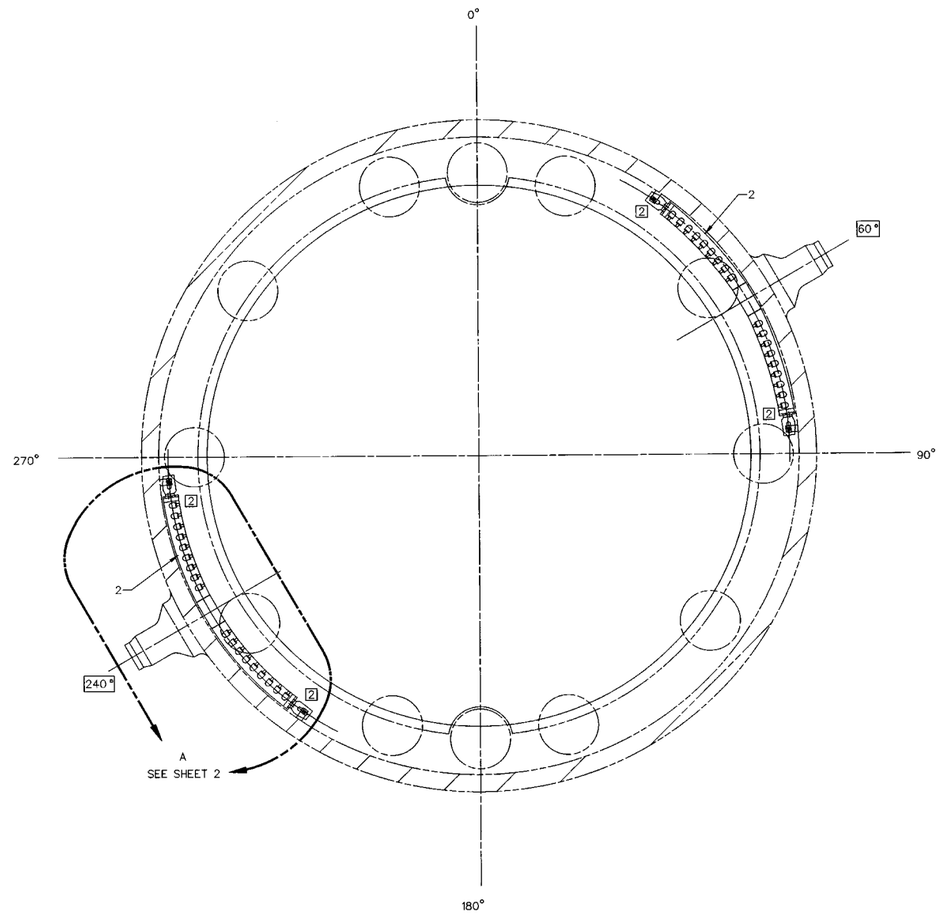

RPV SECTION AT ELEVATION 10921.00

1

NOTES:

1. ALL DIMENSIONS ARE IN MILLIMETERS UNLESS OTHERWISE NOTED.
2. FOR ADDITIONAL INSTALLATION REQUIREMENTS REFER TO VESSEL AND COMPONENTS INSTALLATION SPECIFICATION 23A6162.
3. THE THERMAL SLEEVE IS SUPPLIED BY THE VESSEL MANUFACTURER.
4. THE THERMAL SLEEVE MUST BE TRIMMED TO THE CORRECT LENGTH WITH ADJUSTMENT TO WELD SHRINKAGE (TWO WELD SHRINKAGE FOR THE THERMAL SLEEVE). TO DETERMINE THE CORRECT THERMAL SLEEVE LENGTH, THE END BRACKETS SHALL BE ATTACHED TO THE SPARGER BUT NOT WELDED TO IT, AND THE SPARGER IS POSITIONED SO THAT THE SPARGER ARMS ARE AS CLOSE AS POSSIBLE TO THE MIDPOINT OF THE ENVELOPE RANGE. THE INSTALLER SHALL MACHINE THE THERMAL SLEEVE INTERFACING WELD END TO MATCH SPARGER TEE WELD END [2] CONFIGURATIONS AS DEFINED IN CE 4.69.2, 10JE1517 (ITEM NO. 25 FOR K6 AND ITEM NO. 4 FOR K7). ALL FITUP REQUIREMENTS AT THE WELD END SHALL BE IN ACCORDANCE WITH THE REQUIREMENTS OF MITI 81.
5. THE THERMAL SLEEVE WHEN WELDED TO THE SAFE END SHALL HAVE EQUAL GAP TO THE NOZZLE BORE WITHIN 3.2 mm AT 4 EQUALLY SPACED LOCATIONS JUST INSIDE THE NOZZLE BLEND RADIUS.
6. THE THERMAL SLEEVE MAY HAVE TO BE MITERED TO SATISFY THE ENVELOPE REQUIREMENT.
7. MISMATCH OF CENTER LINES OF WELD PREPS SHALL BE LESS THAN 0.8 DIAMETER BEFORE WELDING.
8. DO NOT SLING BY NOZZLE ELBOWS OR CONTACT ELBOWS WHEN LIFTING AND HANDLING.
9. GRINDING OF THE HEADER END PLATE IS PERMITTED IF REQUIRED TO MEET THIS REQUIREMENT (EXCEPT NOT WITHIN 6 mm OF THE BRACKET WELD OR OF THE HEADER TO SPARGER END PLATE). GRINDING OF THE SPARGER TO MEET THIS REQUIREMENT IS PROHIBITED.
10. CONTACT OF THE TOP OF THE END BRACKET TO THE WASHER AND CONTACT OF THE PIN TO BACK (TOWARD REACTOR PRESSURE VESSEL WALL) OF THE SLOT IN THE END BRACKET ARE REQUIRED AFTER THE SPARGER TO SAFE END WELDING. MAXIMUM HORIZONTAL COLD SPRING MEASURED AT THE END PIN AFTER WELDING TO BE 3.2 mm. MAXIMUM VERTICAL COLD SPRING MEASURED AT THE WASHER AFTER [2] WELDING TO BE ALSO 3.2 mm. INSTALLER'S COLD SPRING PRACTICE MAY BE ACCEPTED BASED ON PRIOR APPROVAL OF THE INSTALLATION PROCEDURE.
11. ALL WELDS ARE AUSTENITIC SST TO AUSTENITIC SST UNLESS OTHERWISE SPECIFIED.
12. TIGHTEN NUT, ITEM 4, UNTIL IT HAS BOTTOMED AGAINST SHOULDER OF PIN, ITEM 3, BEFORE PLACING WELD ON END OF THREAD.
13. THIS WELD HAS TO BE COMPATIBLE WITH THE MATERIAL OF THE WELD PREP OR WELD BUTTER.
14. THE CONFIGURATION OF THE THERMAL SLEEVE WELD PREP. MUST MATCH THAT OF THE SAFE END.

Figure 20.3.4-5a LOW PRESSURE CORE FLOODER SPARGER, SHEET 1

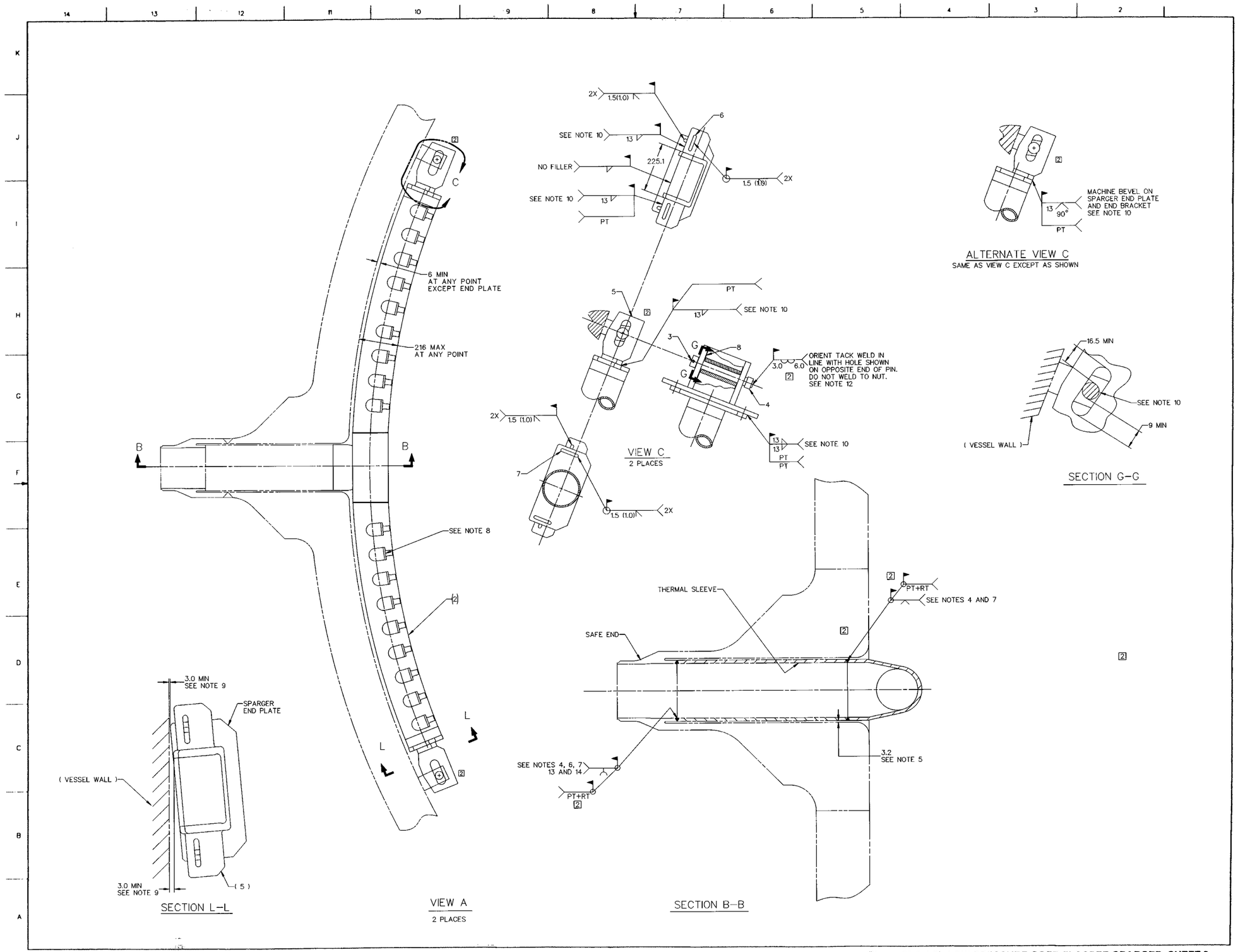

Figure 20.3.4-5b LOW PRESSURE CORE FLOODER SPARGER, SHEET 2

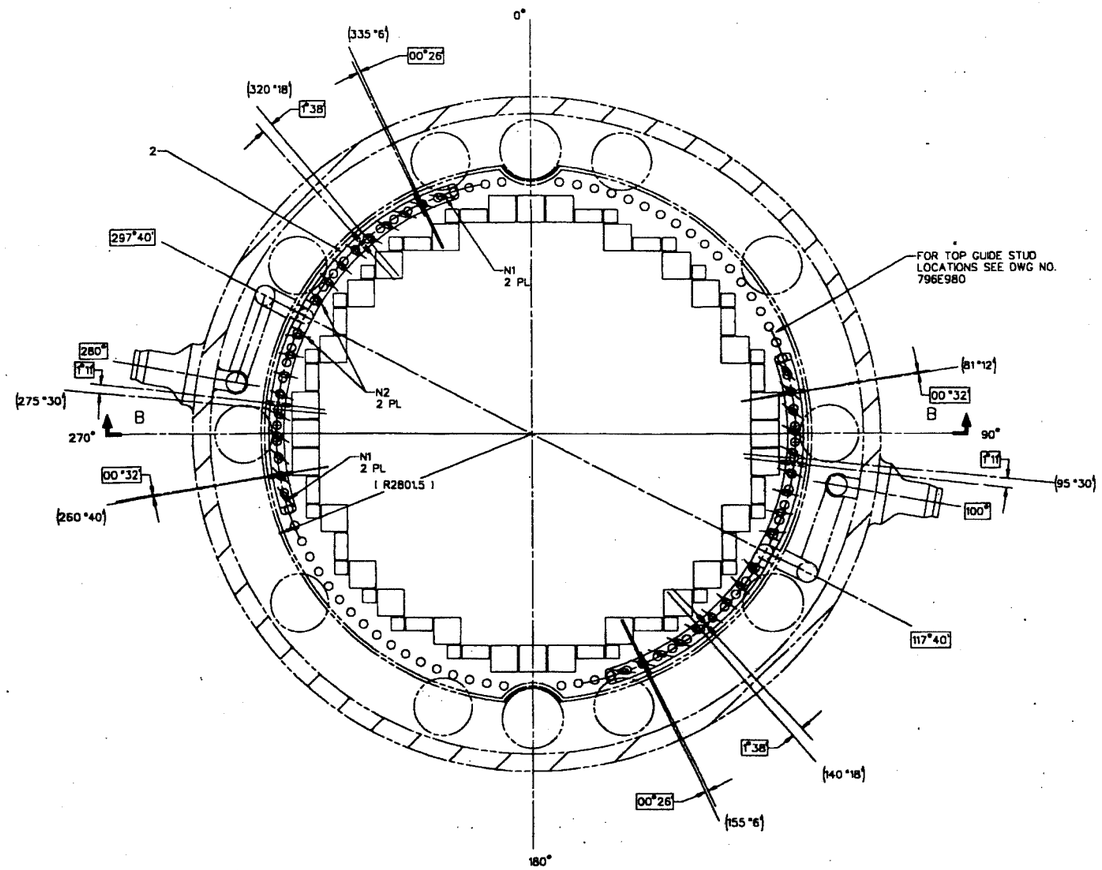

1

RPV SECTION AT 10312.00

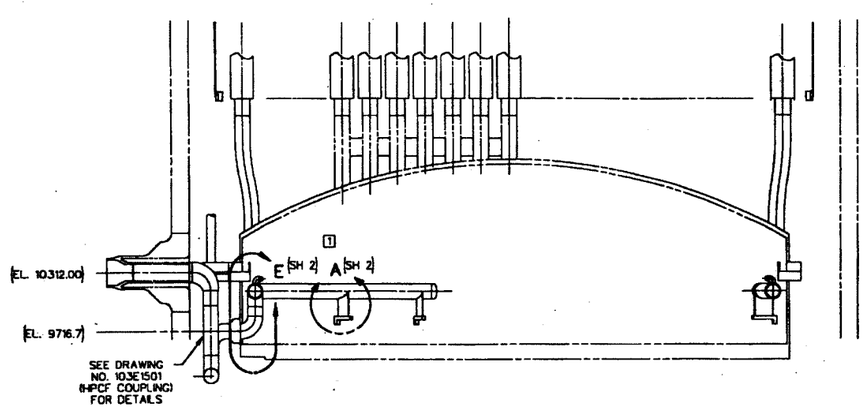

SECTION B–B

NOTES:

1. ALL DIMENSIONS ARE IN MILLIMETERS UNLESS OTHERWISE NOTED.
2. FOR ADDITIONAL INSTALLATION REQUIREMENTS REFER TO VESSEL AND COMPONENTS INSTALLATION SPECIFICATION 23A6162.
3. THE SPARGER TEE SHALL BE POSITIONED IN ACCORDANCE WITH DETAIL E. THE SPARGER SHALL BE POSITIONED TO MEET THE REQUIREMENTS OF DETAIL A AT ANY POINT WITH THE ADDITIONAL REQUIREMENT THAT THE SPARGER ENDS BE THE SAME DISTANCE FROM THE TOP GUIDE WALL WITHIN 12 mm.
4. INSTALLATION OF THE HPCF COUPLING SHALL BE PERFORMED AFTER SPARGER INSTALLATION TO ENSURE THAT THE SPARGER TEE AND COUPLING PIPE ARE CONCENTRIC (SEE 103E1501).
5. INSTALLATION OF THE HPCF SPARGERS, THEIR SUPPORTS AND HPCF COUPLING PARTS SHALL BE PERFORMED IN THE SHOP BY THE TOP GUIDE VENDOR.
6. ALL WELDS REFERENCED TO THIS NOTE SHALL BE AS FOLLOWS AND MEET THE REQUIREMENTS OF GE SPEC. 23A6096.
   a. PROGRESSIVE PT
   b. ROOT AND FINAL PT
   c. SURFACE PT
   d. RADIOGRAPHIC
7. APPLIES 4 PLACES AT THE OUTERMOST (N1) AND INNERMOST (N2) SPARGER ELBOWS.
8. ALL WELDS ARE AUSTINITIC STAINLESS STEEL TO AUSTENITIC STAINLESS STEEL.
9. TRIM ITEM 4 TO FIT AS SHOWN.
10. WELD FINISH TO BE AS SHOWN IN VIEW C (SH 2).
11. WELD FINISH TO BE AS SHOWN IN SECTION D–D (SH 2).

Figure 20.3.4-5c HIGH PRESSURE CORE FLOODER SPARGER