HITACHI

GE Hitachi Nuclear Energy

25A5675BE
Revision 5
November 2010

ABWR
Design Control Document
Tier 2

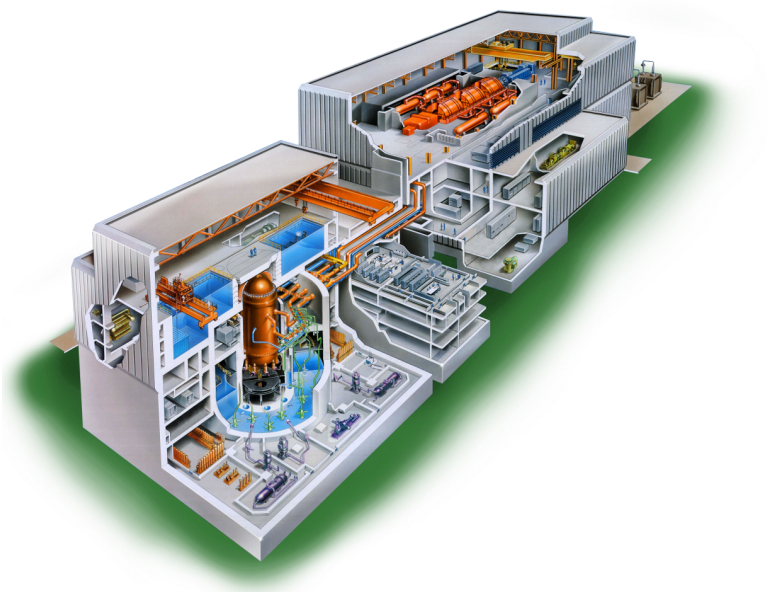

Chapter 21

Volume 4

Copyright 1994, 2010, GE-Hitachi Nuclear Energy Americas LLC
All Rights Reserved

Figure No.	Title	Page No.
	25A5675BE VOLUME 4	
7.3-5	Leak Detection and Isolation System IBD (shts. 1-77)	228.1
7.3-6	Standby Gas Treatment System IBD (shts. 1-11)	229
7.3-7	Reactor Building Cooling Water I Reactor Service Water System IBD (shts. 1-19)	240

NOTES:

1. ALL REFERENCE LDS MPL DESIGNATORS ARE PREFIXED BY E31 UNLESS INDICATED OTHERWISE.

2. NEGATIVE TRUE LOGIC IS USED IN THIS IBD TO DEPICT FAIL SAFE CONCEPTS FOR ALL SYSTEM ISOLATION FUNCTIONS. HIGH OR STATE 1 FOR THE UNTRIPPED NORMAL CONDITION AND LOW OR STATE 0 FOR THE TRIPPED CONDITION.

3. ALL 2/4 LOGIC SHALL REVERT TO 2/3 LOGIC DURING BYPASS OF A SINGLE DIVISION OF SENSORS. NOT MORE THAN ONE DIVISION OF SENSOR SHALL BE BYPASSED AT ANY ONE TIME.

4. THE MSIV PILOT SOLENOIDS SHALL BE POWERED FROM SAFETY DIVISIONS 1 AND 2 AS FOLLOWS:

MSIV \ SOLENOID	1*	2	3
B21-F008A-D INBD	DIV II	DIV II	DIV I
B21-F009A-D OUTBD	DIV I	DIV II	DIV I

5. ALL SIGNAL OUTPUTS TO ALARMS AND COMPUTER SHALL BE OPTICALLY ISOLATED FROM ESSENTIAL CIRCUIT.

6. THE LAST TWO SHEETS OF THIS IBD DEPICT THE SSLC HARDWARE CONFIGURATION FOR PROCESSING THE CONTROL AND INTERLOCK LOGIC IN THIS IBD EXCEPT MSIV. THE BLOCK DIAGRAM ILLUSTRATES THE FOLLOWING SPECIAL FEATURES:

   A. BYPASS UNIT FOR DIVISION-OF-SENSORS BYPASS. (ONE UNIT PER DIVISION).

   B. DUAL REDUNDANT SLU MICROPROCESSORS WITH 2/2 OUTPUT VOTER TO PREVENT INADVERTENT INITIATION.

   C. AUTO-BYPASS OF EACH REDUNDANT MICROPROCESSOR CHANNEL ON LOOP FAILURE, WITH MANUAL BACKUP.

REFERENCE DOCUMENTS

	MPL NO.
1. NUCLEAR BOILER SYSTEM, IBD	B21-1030
2. NUCLEAR BOILER SYSTEM, P&ID	B21-1010
3. STANDBY LIQUID CONTROL SYSTEM, IBD	C41-1030
4. NEUTRON MONITORING SYSTEM, IBD	C51-1030
5. REACTOR PROTECTION SYSTEM, IBD	C71-1030
6. PROCESS RADIATION MONITORING SYSTEM, IBD	D11-1030
7. RESIDUAL HEAT REMOVAL SYSTEM, IBD	E11-1030
8. INTERLOCK BLOCK DIAGRAM STANDARD	A10-3070
9. LEAK DETECTION AND ISOLATION SYSTEM, IED	E31-1040
10. REACTOR CORE ISOLATION SYSTEM, IBD	E51-1030
11. REACTOR WATER CLEAN-UP SYSTEM, IBD	G31-1030
12. SUPPRESSION POOL CLEAN-UP SYSTEM, IBD	G51-1030
13. RADIOACTIVE WASTE SYSTEM, P&ID	K17-1010
14. REACTOR BUILDING COOLING WATER SYSTEM, IBD	P21-1030
15. HVAC NORMAL COOLING WATER SYSTEM, IBD	P24-1030
16. STANDBY GAS TREATMENT SYSTEM, IBD	T22-1030
17. ATMOSPHERIC CONTROL SYSTEM, IBD	T31-1030
18. FLAMMABILITY CONTROL SYSTEM, IBD	T49-1030
19. HEATING, VENTILLATING & AIR CONDITIONING SYSTEM, P&ID	U41-1010

MSIV OPERATIONAL MODES

OPERATING MODES \ SOLENOID VALVES	1*	2	3
(1) MSIV AUTO/OPEN (PLANT NORMAL OPER.)	DE DE DE	E DE E	DE E E
(2) MSIV QUICK CLOSED	DE	DE	DE
(3) MSIV TEST CLOSED	E E E	DE E E	E E DE

E = ENERGIZED
DE =DE-ENERGIZED
* = TEST SOLENOID

ABBREVIATIONS:

OLU - OUTPUT LOGIC UNIT
TLU - TRIP LOGIC UNIT
DTM - DIGITAL TRIP MODULE
SLU - SAFETY SYSTEM LOGIC UNIT

MPL NO. E31-1030

NOTES AND REFERENCE DOCUMENTS

FIGURE 7.3-5 LEAK DETECTION AND ISOLATION SYSTEM IBD (Sheet 1 of 77)

TABLE OF CONTENTS

SH. NO.	TITLE
1	NOTES & REFERENCE DOCUMENTS
2	CONTENTS
3	INDEX OF ALARMS
4	MSIV SENSORS & TRIP LOGIC – DIV 1
5	MSIV SENSORS & TRIP LOGIC – DIV 2
6	MSIV SENSORS & TRIP LOGIC – DIV 3
7	MSIV SENSORS & TRIP LOGIC – DIV 4
8	MSIV VOTING & CHANNEL BYPASS LOGIC – DIV 1
9	MSIV VOTING & CHANNEL BYPASS LOGIC – DIV 1
10	MSIV VOTING & CHANNEL BYPASS LOGIC – DIV 1
11	MSIV AUTO ISOLATION TRIP LOGIC – DIV 1
12	MSIV VOTING & CHANNEL BYPASS LOGIC – DIV 2
13	MSIV VOTING & CHANNEL BYPASS LOGIC – DIV 2
14	MSIV VOTING & CHANNEL BYPASS LOGIC – DIV 2
15	MSIV AUTO ISOLATION TRIP LOGIC – DIV 2
16	MSIV VOTING & CHANNEL BYPASS LOGIC – DIV 3
17	MSIV VOTING & CHANNEL BYPASS LOGIC – DIV 3
18	MSIV VOTING & CHANNEL BYPASS LOGIC – DIV 3
19	MSIV AUTO ISOLATION TRIP LOGIC – DIV 3
20	MSIV VOTING & CHANNEL BYPASS LOGIC – DIV 4
21	MSIV VOTING & CHANNEL BYPASS LOGIC – DIV 4
22	MSIV VOTING & CHANNEL BYPASS LOGIC – DIV 4
23	MSIV AUTO ISOLATION TRIP LOGIC – DIV 4
24	MSIV POSITION SENSORS LOGIC
25	MSL A INBOARD MSIV CONTROL LOGIC
26	MSL B INBOARD MSIV CONTROL LOGIC
27	MSL C INBOARD MSIV CONTROL LOGIC
28	MSL D INBOARD MSIV CONTROL LOGIC
29	MSL A OUTBOARD MSIV CONTROL LOGIC
30	MSL B OUTBOARD MSIV CONTROL LOGIC

SH. NO.	TITLE
31	MSL C OUTBOARD MSIV CONTROL LOGIC
32	MSL D OUTBOARD MSIV CONTROL LOGIC
33	MANUAL & AUTO MSL ISOLATION LOGIC – DIV 1
34	MANUAL & AUTO MSL ISOLATION LOGIC – DIV 2
35	MANUAL & AUTO MSL ISOLATION LOGIC – DIV 3
36	MANUAL & AUTO MSL ISOLATION LOGIC – DIV 4
37	INBOARD MSIV CONTROL LOGIC
38	OUTBOARD MSIV CONTROL LOGIC
39	ANNUNCIATORS – MSIV TRIP INDICATION
40	ANNUNCIATORS – MSIV TRIPPED IN BYPASS CHANNEL
41	LDS SENSORS & TRIP LOGIC – DIV 1
42	LDS SENSORS & TRIP LOGIC – DIV 2
43	LDS SENSORS & TRIP LOGIC – DIV 3
44	LDS SENSORS & TRIP LOGIC – DIV 4
45	LDS VOTING & BYPASS LOGIC – DIV 1
46	LDS VOTING & BYPASS LOGIC – DIV 2
47	LDS VOTING & BYPASS LOGIC – DIV 3
48	RHR AREA A TEMP TRIP LOGIC
49	RHR AREA B TEMP TRIP LOGIC
50	RHR AREA C TEMP TRIP LOGIC
51	RHR LOOP A ISOLATION LOGIC
52	RHR LOOP B ISOLATION LOGIC
53	RHR LOOP C ISOLATION LOGIC
54	RCIC AREA TEMP TRIP LOGIC
55	RCIC LOW SL PRESSURE TRIP LOGIC
56	RCIC HIGH SL FLOW TRIP LOGIC
57	RCIC ISOLATION LOGIC
58	CUW MASS DIFF FLOW TRIP LOGIC
59	CUW REG HX TEMP TRIP LOGIC
60	CUW NON–REG HX TEMP TRIP LOGIC

SH. NO.	TITLE
61	CUW VALVE ROOM TEMP TRIP LOGIC
62	CUW INBOARD VALVE ISOLATION LOGIC
63	CUW OUTBOARD VALVE ISOLATION LOGIC
64	CUW INJECTION & PURGE LINE VALVES ISOLATION LOGIC
65	CUW HEAD SPRAY VALVE ISOLATION LOGIC
66	DRYWELL FISSION PRODUCTS SAMPLING PUMPS
67	DRYWELL FISSION PRODUCTS ISOLATION VALVES
68	DRYWELL FISSION PRODUCTS MISC CIRCUIT LOGIC
69	SPCU ISOLATION LOGIC
70	DW LCW & HCW SUMP DRAIN LINES ISOLATION LOGIC
71	RCW/HNCW PCV VALVES ISOLATION LOGIC
72	AC SYSTEM & R/B HVAC ISOLATION LOGIC
73	SGTS INITIATION LOGIC
74	FCS ISOLATION LOGIC
75	MISC LOGIC & ANNUNCIATORS
76	SSLC/ECCS/LDS BLOCK DIAGRAM
77	SSLC/ECCS/LDS BLOCK DIAGRAM (CONT'D)

CONTENTS

FIGURE 7.3–5 LEAK DETECTION AND ISOLATION SYSTEM IBD (Sheet 2 of 77)

E31/LDS ANNUNCIATOR LIST

ITM. NO.	ALARM FUNCTION	SH. NO.
1	MSL AUTO TRIP – ONE PER LOGIC DIVISION	33–36
2	MSL MANUAL TRIP – ONE PER LOGIC DIVISION	33–36
3	MSL TUNNEL TEMP HIGH – ONE COMMON TO FOUR DIVISIONS	39
4	MSL TURBINE AREA AMBIENT TEMP HIGH – SAME AS 3 ABOVE	39
5	MSL RADIATION HIGH – SAME AS 3 ABOVE	39
6	REACTOR WATER LEVEL LOW – SAME AS 3 ABOVE	39
7	MSL A STEAM FLOW HIGH – SAME AS 3 ABOVE	39
8	MSL B STEAM FLOW HIGH – SAME AS 3 ABOVE	39
9	MSL C STEAM FLOW HIGH – SAME AS 3 ABOVE	39
10	MSL D STEAM FLOW HIGH – SAME AS 3 ABOVE	39
11	MAIN CONDENSER VACUUM LOW – SAME AS 3 ABOVE	39
12	MSL PRESSURE LOW – SAM AS 3 ABOVE	39
13	TRIPPED MSIV VARIABLE IN BYPASSED CHANNEL A	40
14	TRIPPED MSIV VARIABLE IN BYPASSED CHANNEL B	40
15	TRIPPED MSIV VARIABLE IN BYPASSED CHANNEL C	40
16	TRIPPED MSIV VARIABLE IN BYPASSED CHANNEL D	40
17	RHR EQUIPMENT AREA A TEMP HIGH	48
18	RHR EQUIPMENT AREA B TEMP HIGH	49
19	RHR EQUIPMENT AREA C TEMP HIGH	50
20	RHR ISOLATED – LOOP A	51
21	RHR ISOLATED – LOOP B	52
22	RHR ISOLATED – LOOP C	53
23	RCIC EQUIPMENT AREA TEMP HIGH	54
24	RCIC STEAMLINE PRESSURE LOW	55
25	RCIC STEAMLINE FLOW HIGH	56
26	RCIC ISOLATED	57

ITM. NO.	ALARM FUNCTION	SH. NO.
27	CUW REGEN HX AREA TEMP HIGH	59
28	CUW NON–REGEN HX AREA TEMP HIGH	60
29	CUW VALVE ROOM TEMP HIGH	61
30	CUW INBOARD VALVE ISOLATED	62
31	CUW OUTBOARD VALVE ISOLATED	63
32	CUW INJECTION VALVE ISOLATED	64
33	CUW HEAD SPRAY VALVE ISOLATED	65
34	DW INBOARD PCV VALVES ISOLATED	67
35	DW OUTBOARD PCV VALVES ISOLATED	67
36	DW FISSION PRODUCT SAMPLING SYSTEM ABNORMAL	68
37	SPCU ISOLATED	69
38	DRYWELL LCW DRAIN LINE ISOLATED	70
39	DRYWELL HCW DRAIN LINE ISOLATED	70
40	RCW/HNCW PCV VALVES ISOLATED	71
41	AC SYSTEM/HVAC ISOLATED	72
42	SGTS INITIATED ONE EACH PER TRAINS B & C	73
43	FC SYSTEM ISOLATED ONE EACH PER TRAINS B & C	74
44	MONITORED AREA DIFF TEMP HIGH	75
45	DRYWELL AREA TEMP HIGH – ONE COMMON TO FOUR DIVISIONS	75
46	CUW MASS DIFF FLOW HIGH	75
47	CUW MASS DIFF FLOW HIGH WARNING	75
48	DRYWELL AIR COOLER CONDENSATE FLOW HIGH	75
49	VALVE STEMS LEAKAGE TEMP HIGH	75
50	DRYWELL DRAIN SUMPS WATER LEVEL HIGH	75

FIGURE 7.3–5 LEAK DETECTION AND ISOLATION SYSTEM IBD (Sheet 3 of 77)

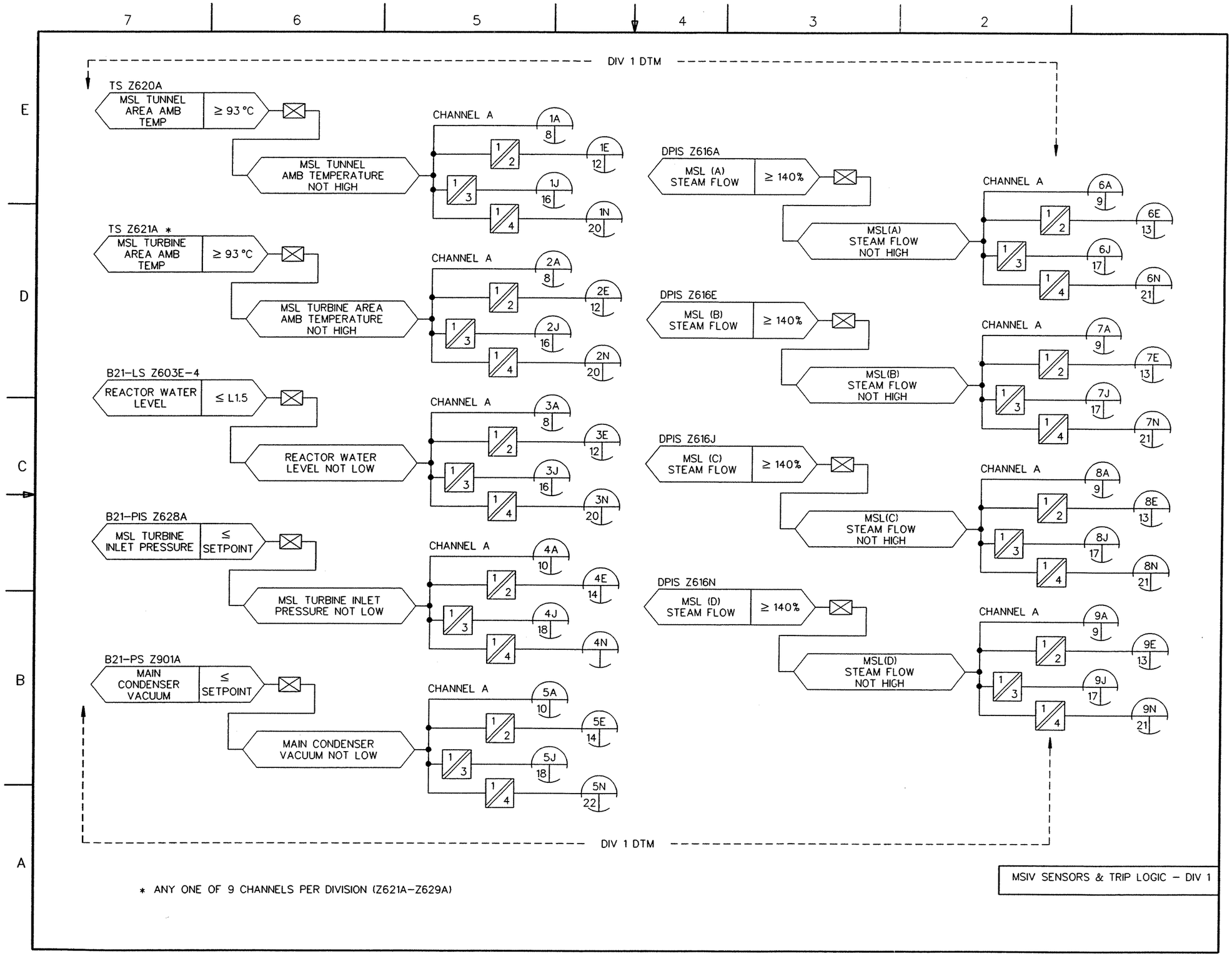

FIGURE 7.3-5 LEAK DETECTION AND ISOLATION SYSTEM IBD (Sheet 4 of 77)

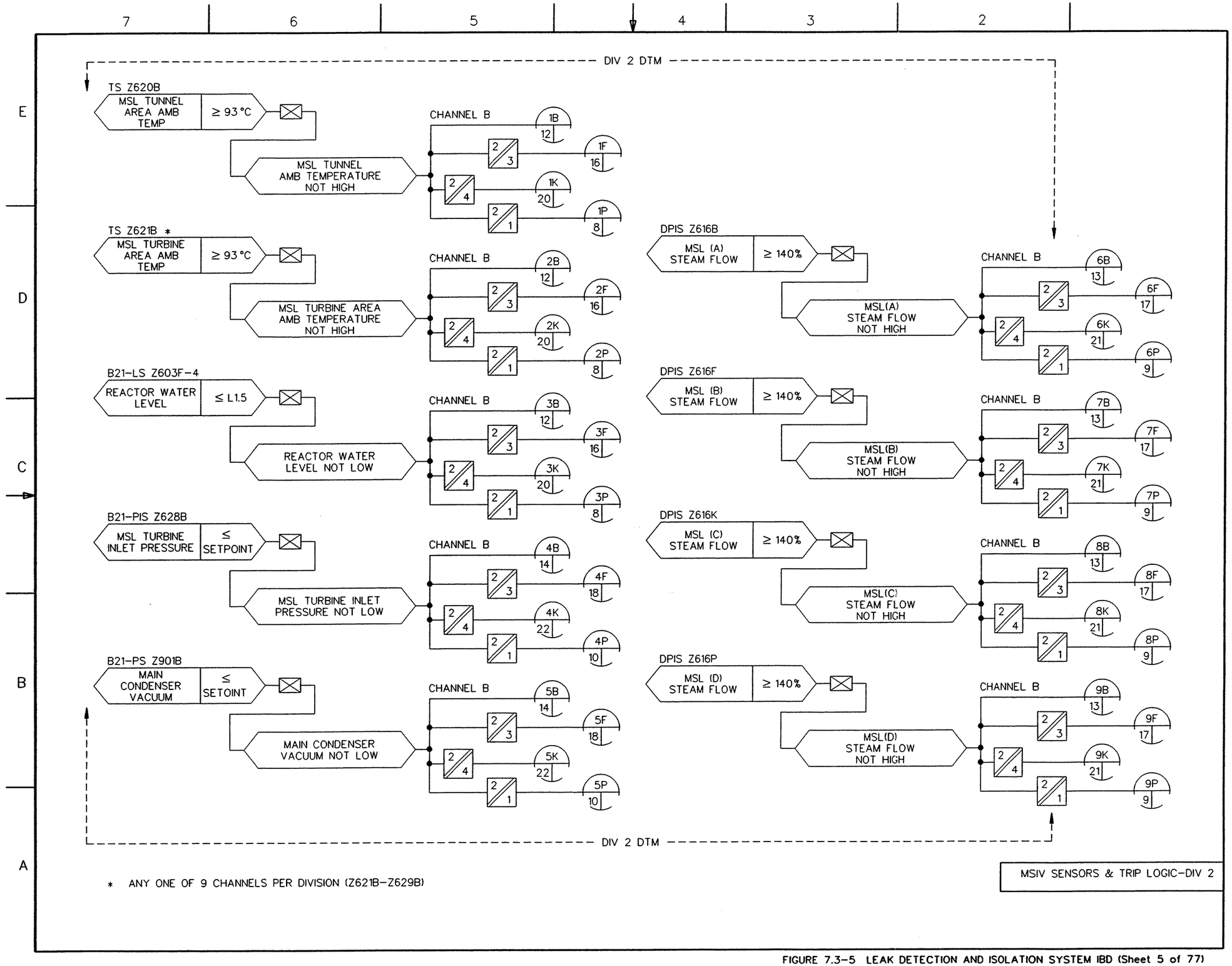

FIGURE 7.3–5 LEAK DETECTION AND ISOLATION SYSTEM IBD (Sheet 5 of 77)

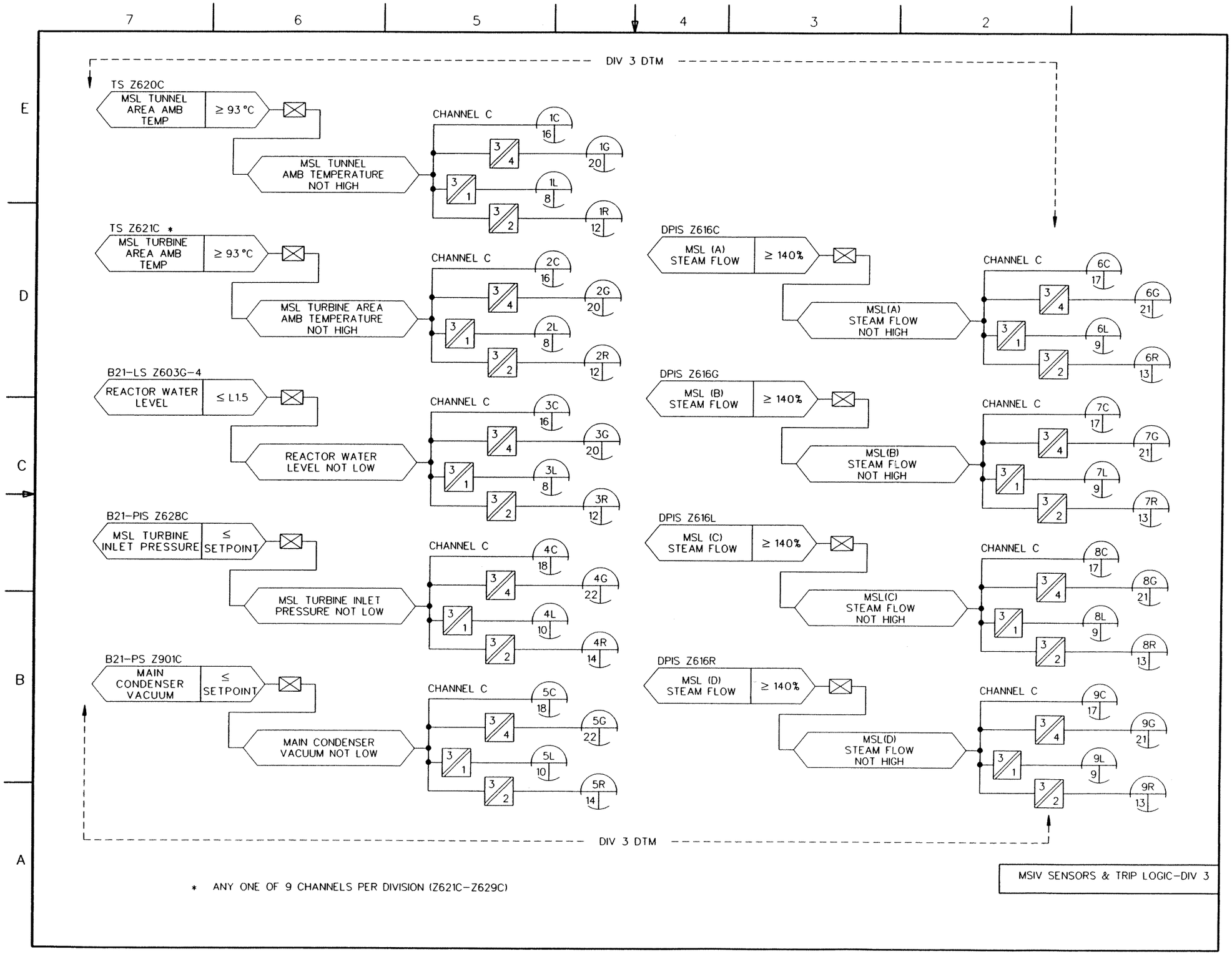

FIGURE 7.3-5 LEAK DETECTION AND ISOLATION SYSTEM IBD (Sheet 6 of 77)

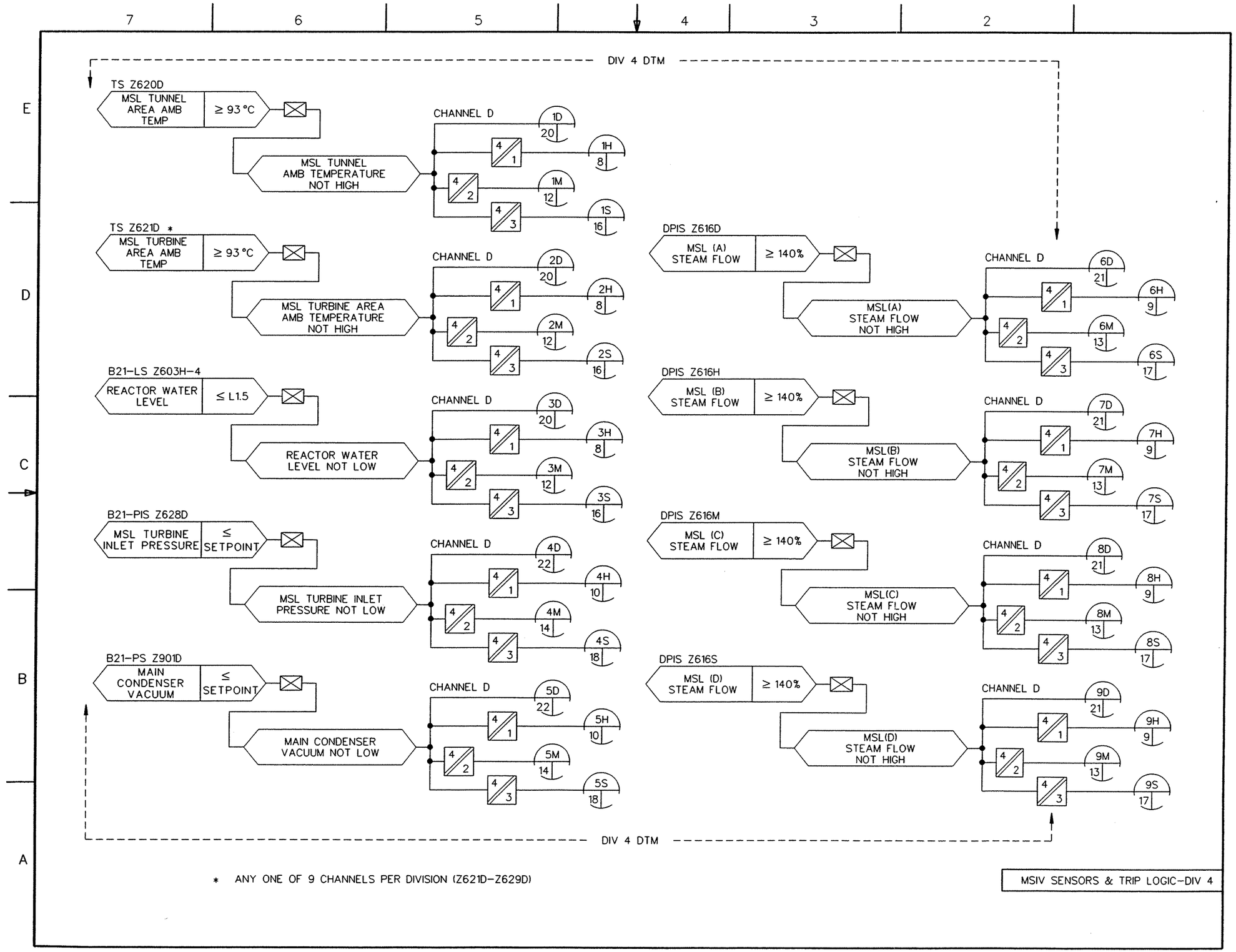

FIGURE 7.3–5 LEAK DETECTION AND ISOLATION SYSTEM IBD (Sheet 7 of 77)

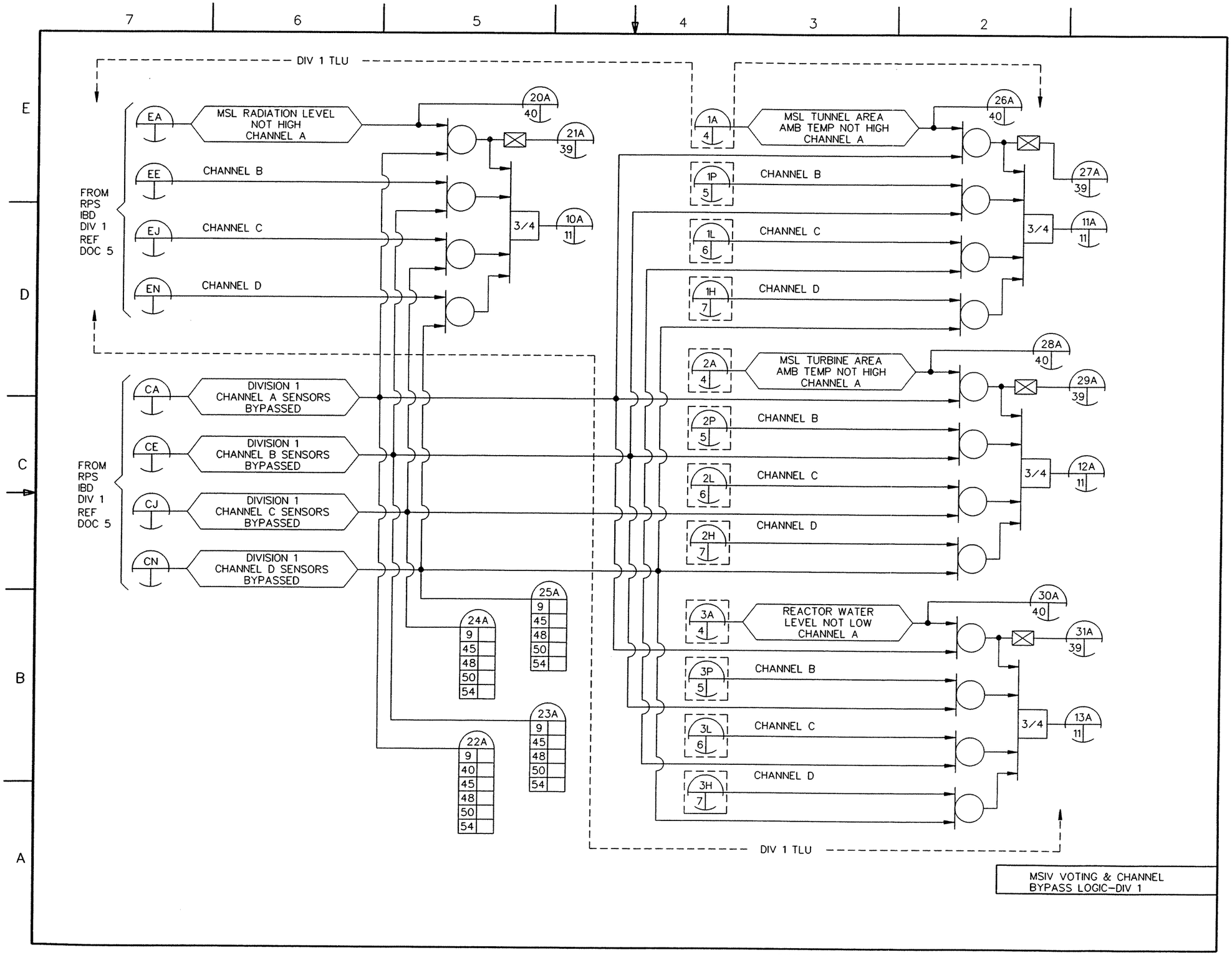

FIGURE 7.3–5 LEAK DETECTION AND ISOLATION SYSTEM IBD (Sheet 8 of 77)

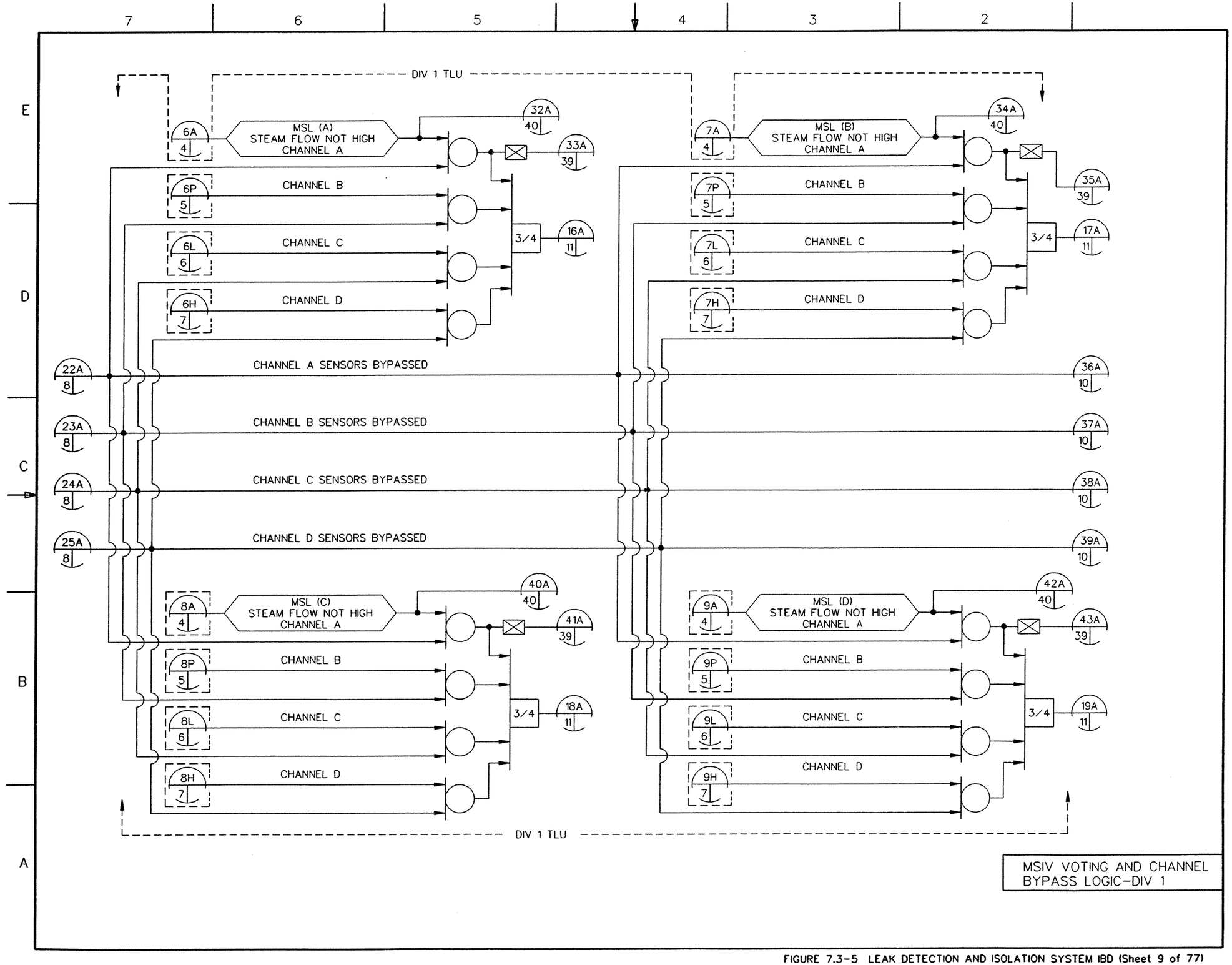

FIGURE 7.3–5 LEAK DETECTION AND ISOLATION SYSTEM IBD (Sheet 9 of 77)

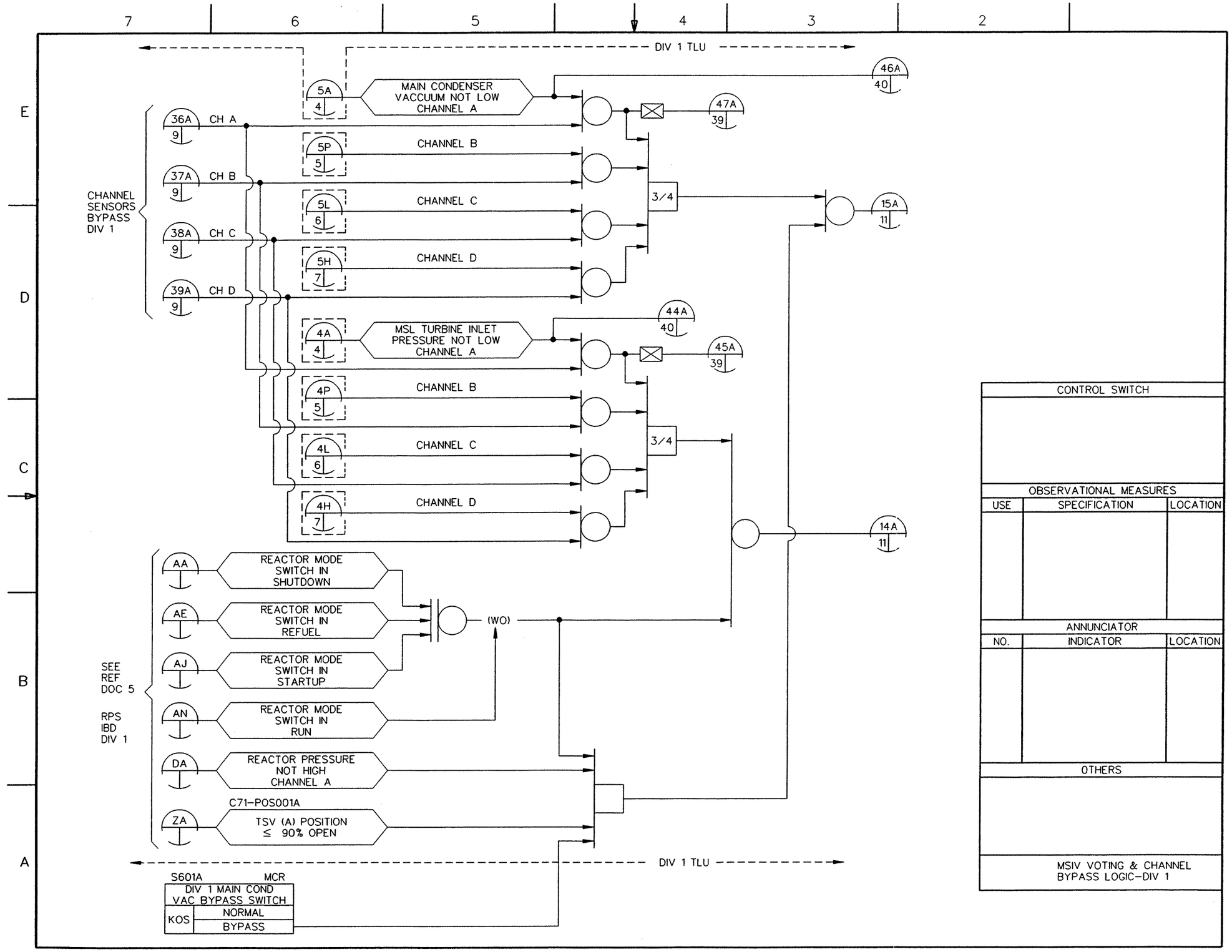

FIGURE 7.3–5 LEAK DETECTION AND ISOLATION SYSTEM IBD (Sheet 10 of 77)

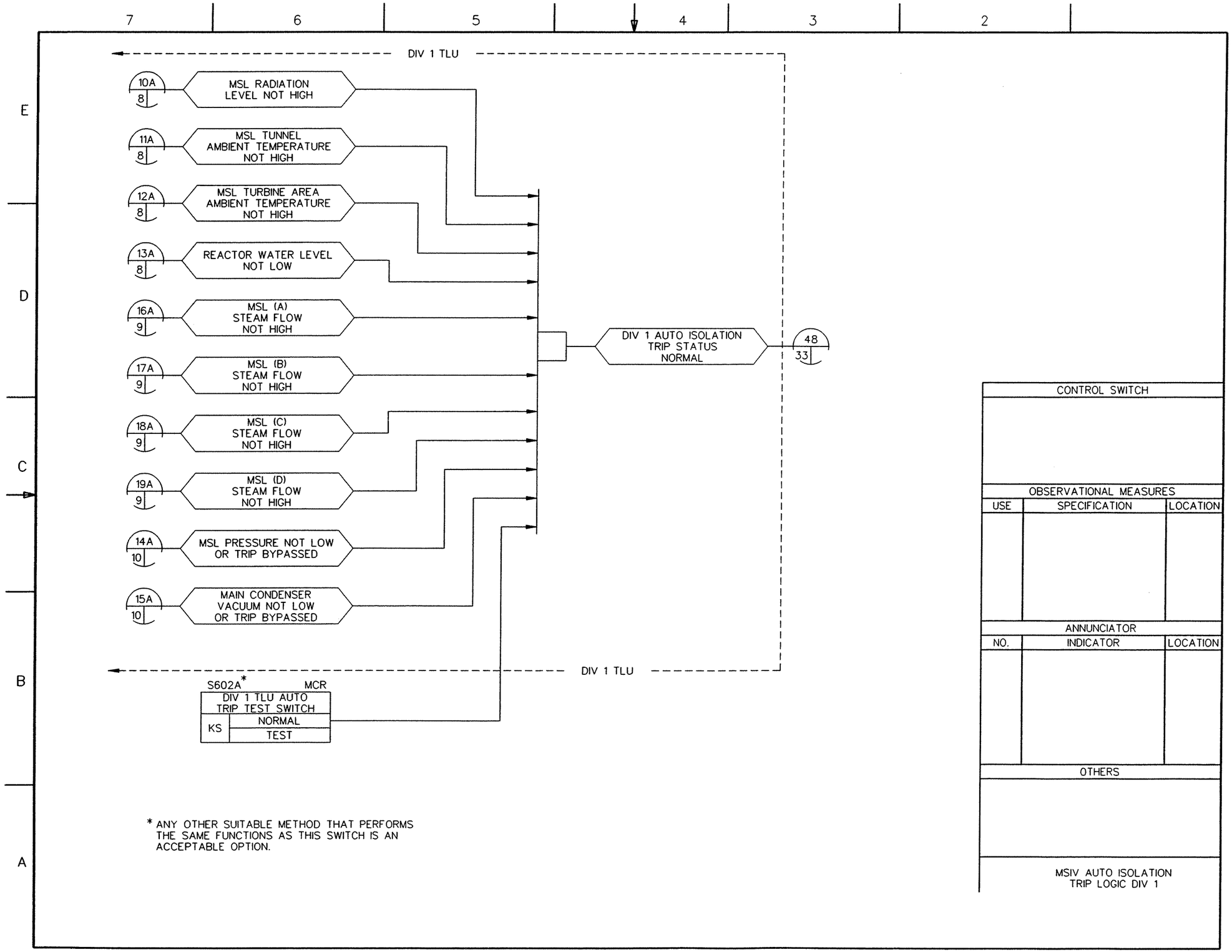

FIGURE 7.3–5 LEAK DETECTION AND ISOLATION SYSTEM IBD (Sheet 11 of 77)

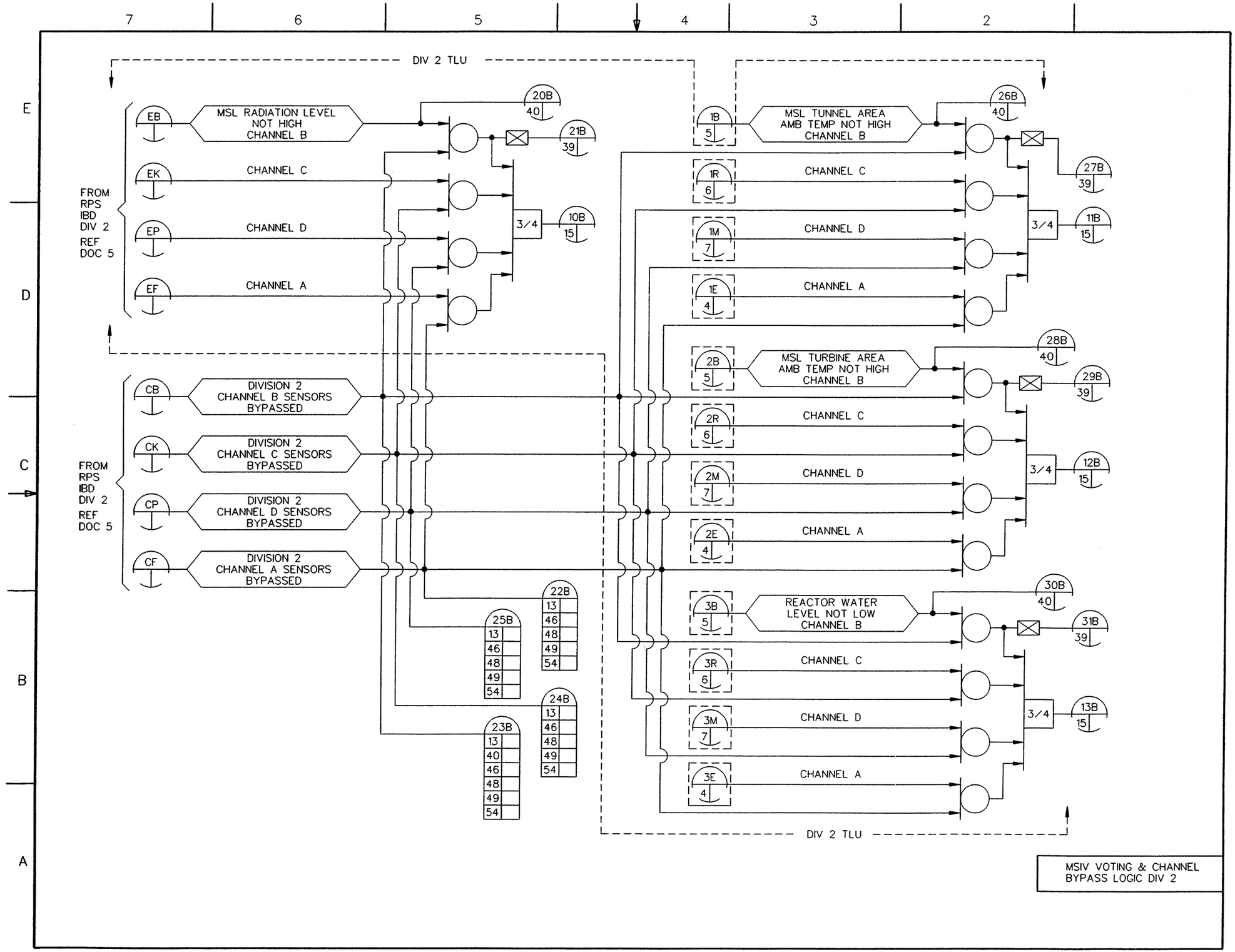

FIGURE 7.3–5 LEAK DETECTION AND ISOLATION SYSTEM IBD (Sheet 12 of 77)

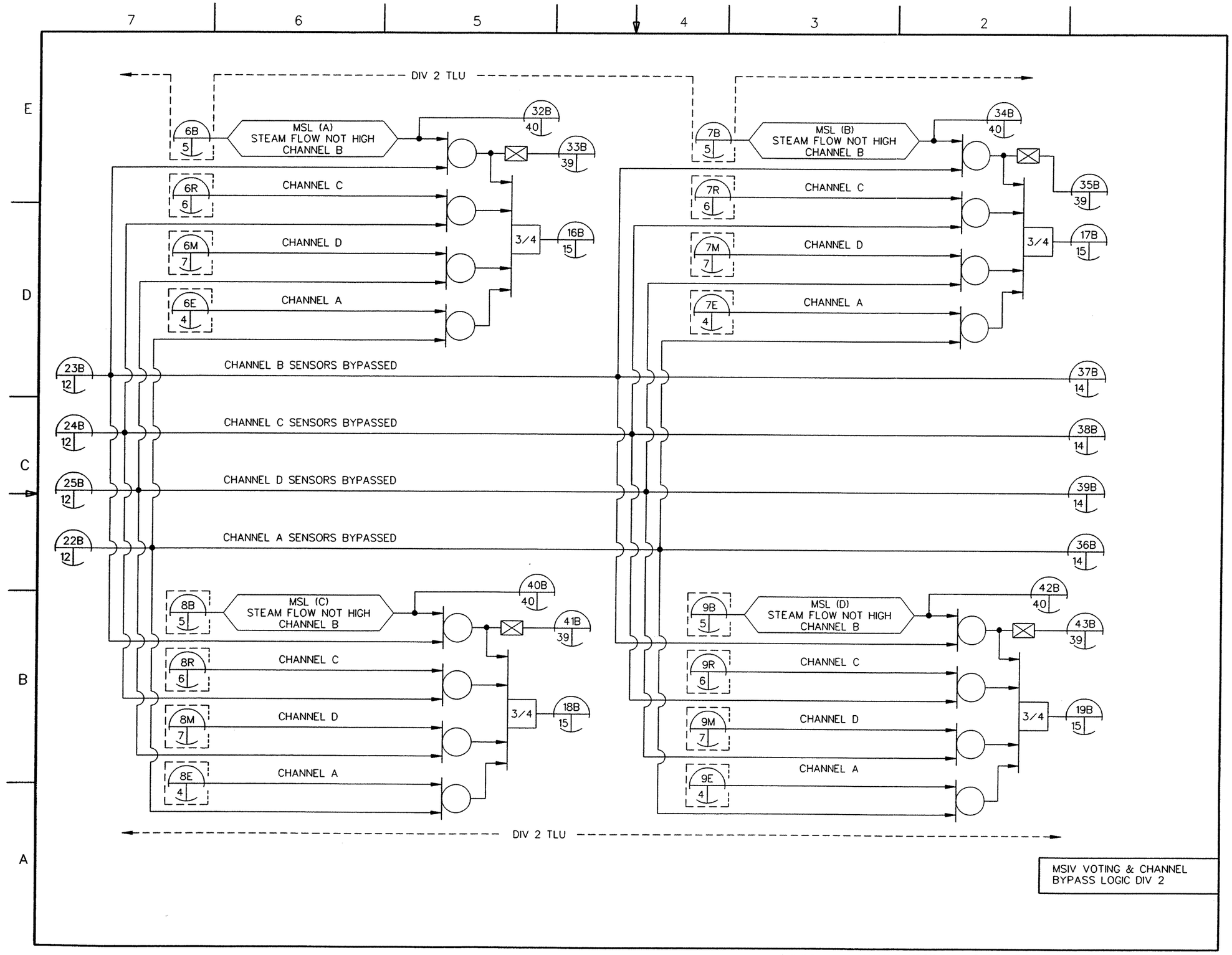

FIGURE 7.3-5 LEAK DETECTION AND ISOLATION SYSTEM IBD (Sheet 13 of 77)

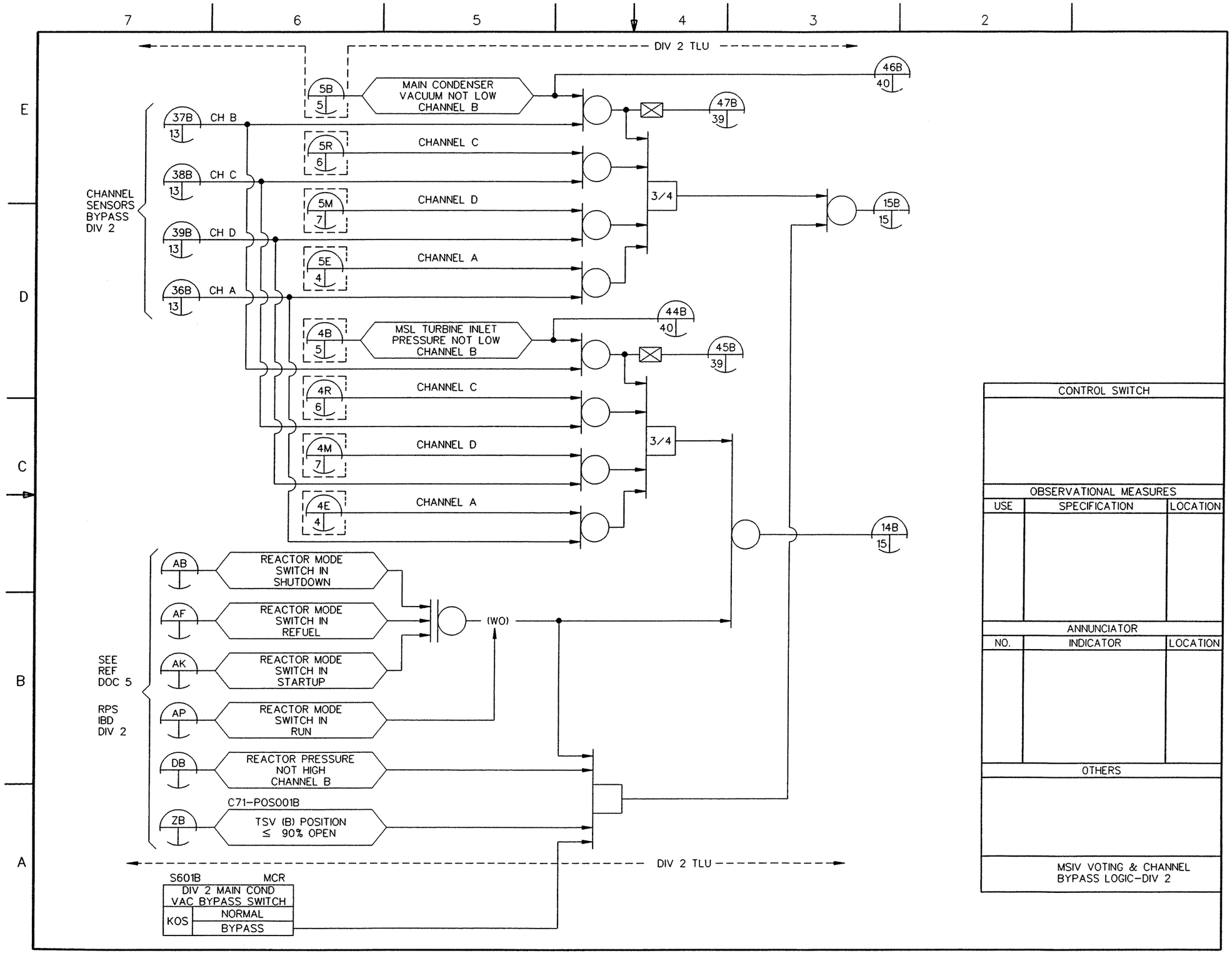

FIGURE 7.3–5 LEAK DETECTION AND ISOLATION SYSTEM IBD (Sheet 14 of 77)

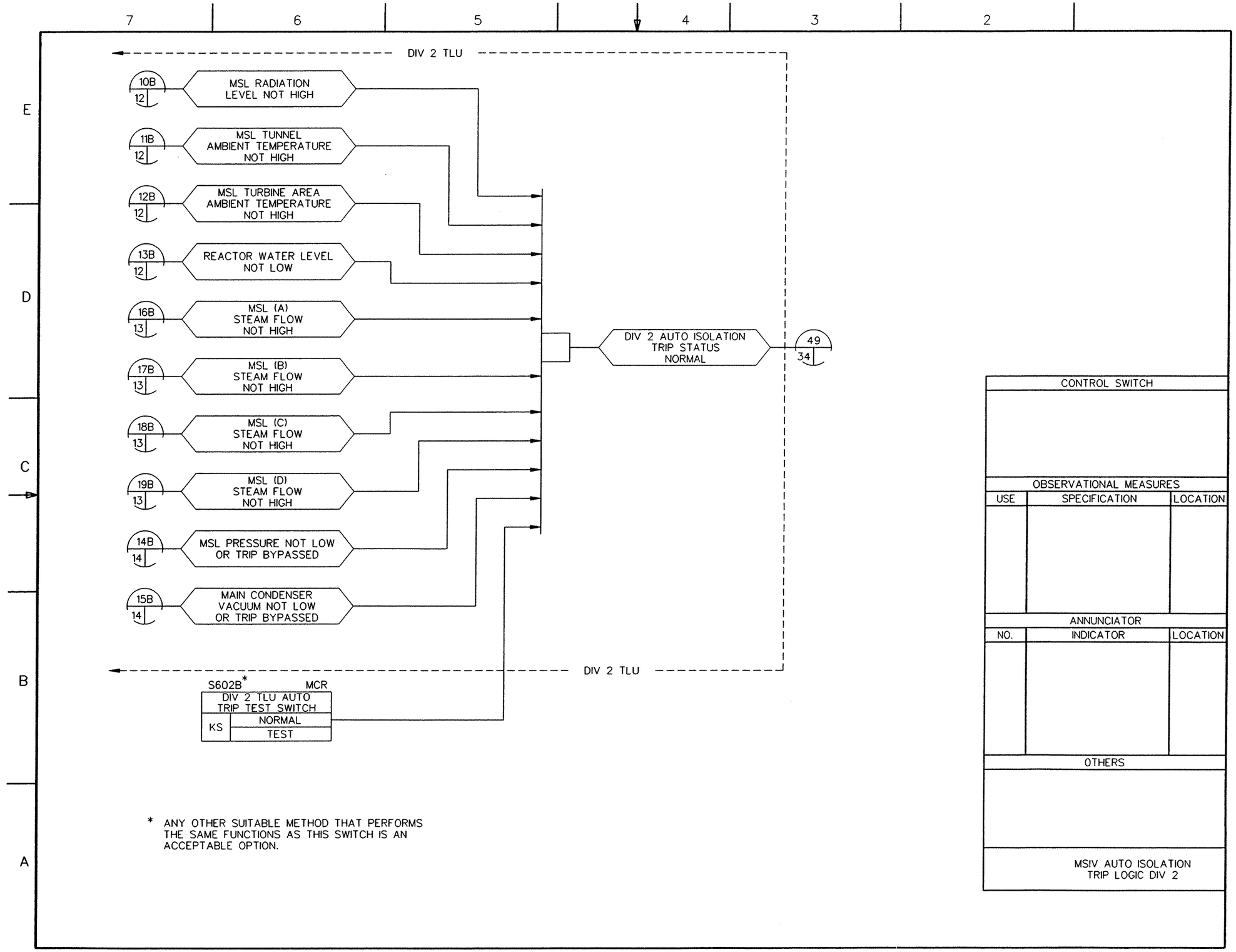

FIGURE 7.3-5 LEAK DETECTION AND ISOLATION SYSTEM IBD (Sheet 15 of 77)

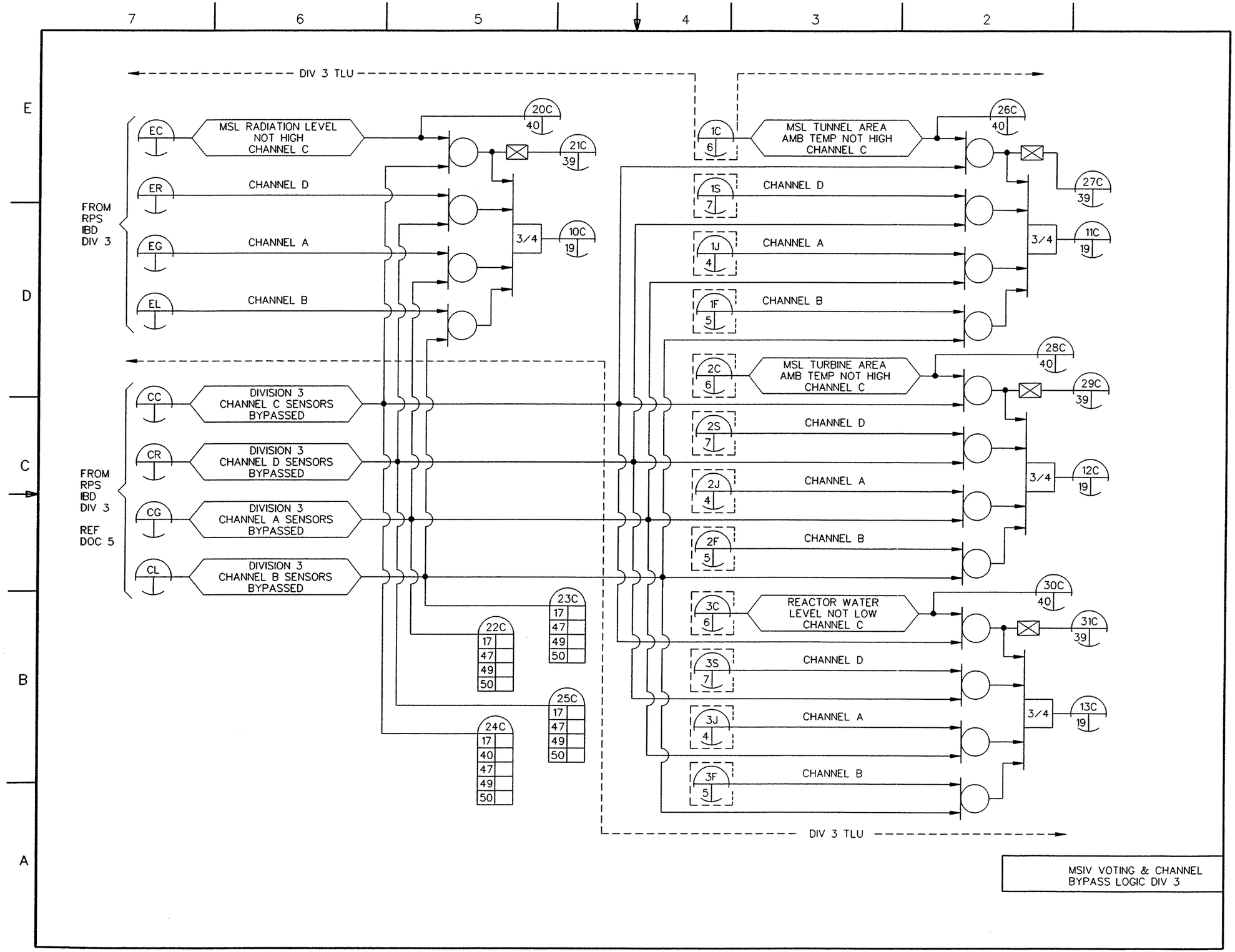

FIGURE 7.3–5 LEAK DETECTION AND ISOLATION SYSTEM IBD (Sheet 16 of 77)

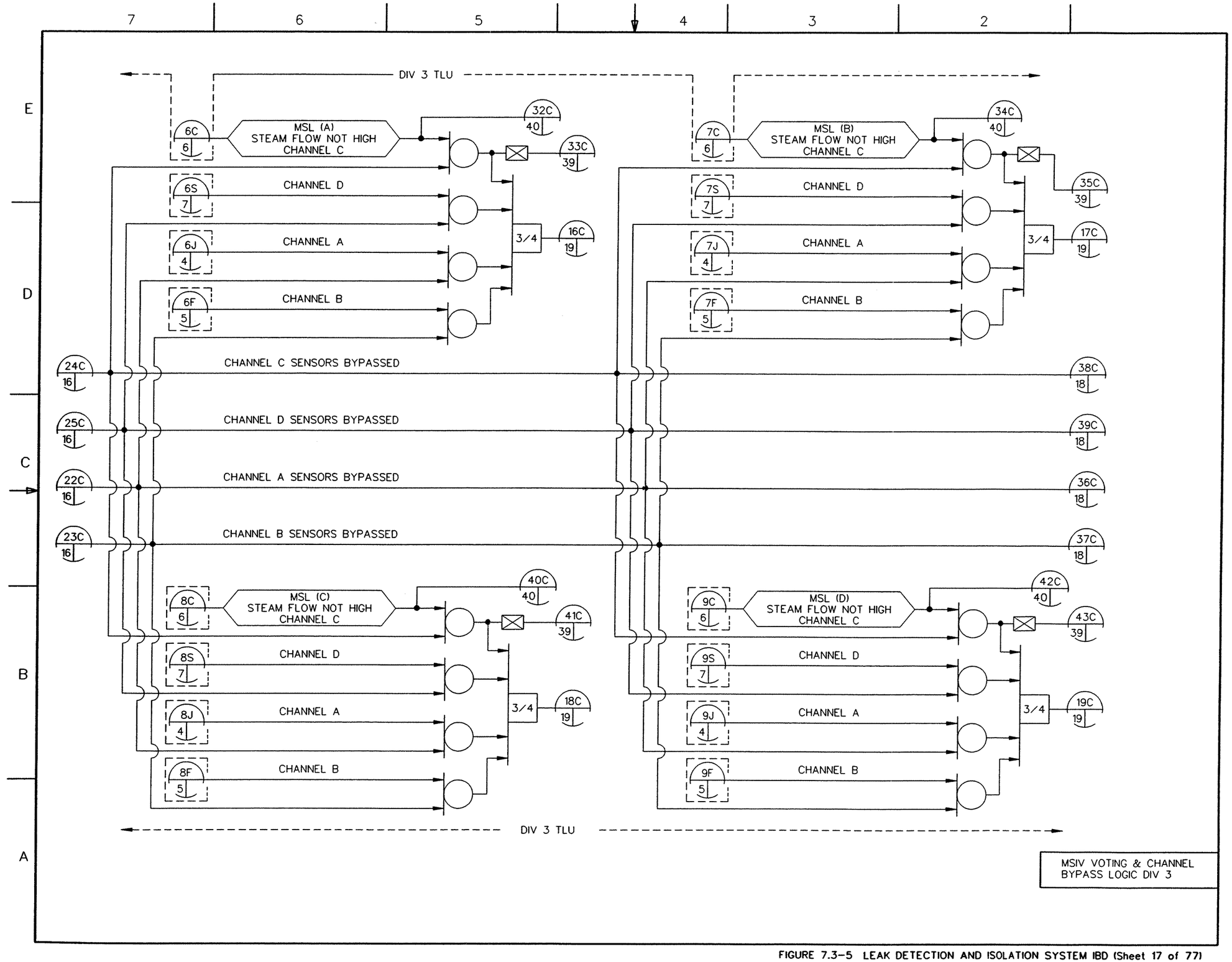

FIGURE 7.3-5 LEAK DETECTION AND ISOLATION SYSTEM IBD (Sheet 17 of 77)

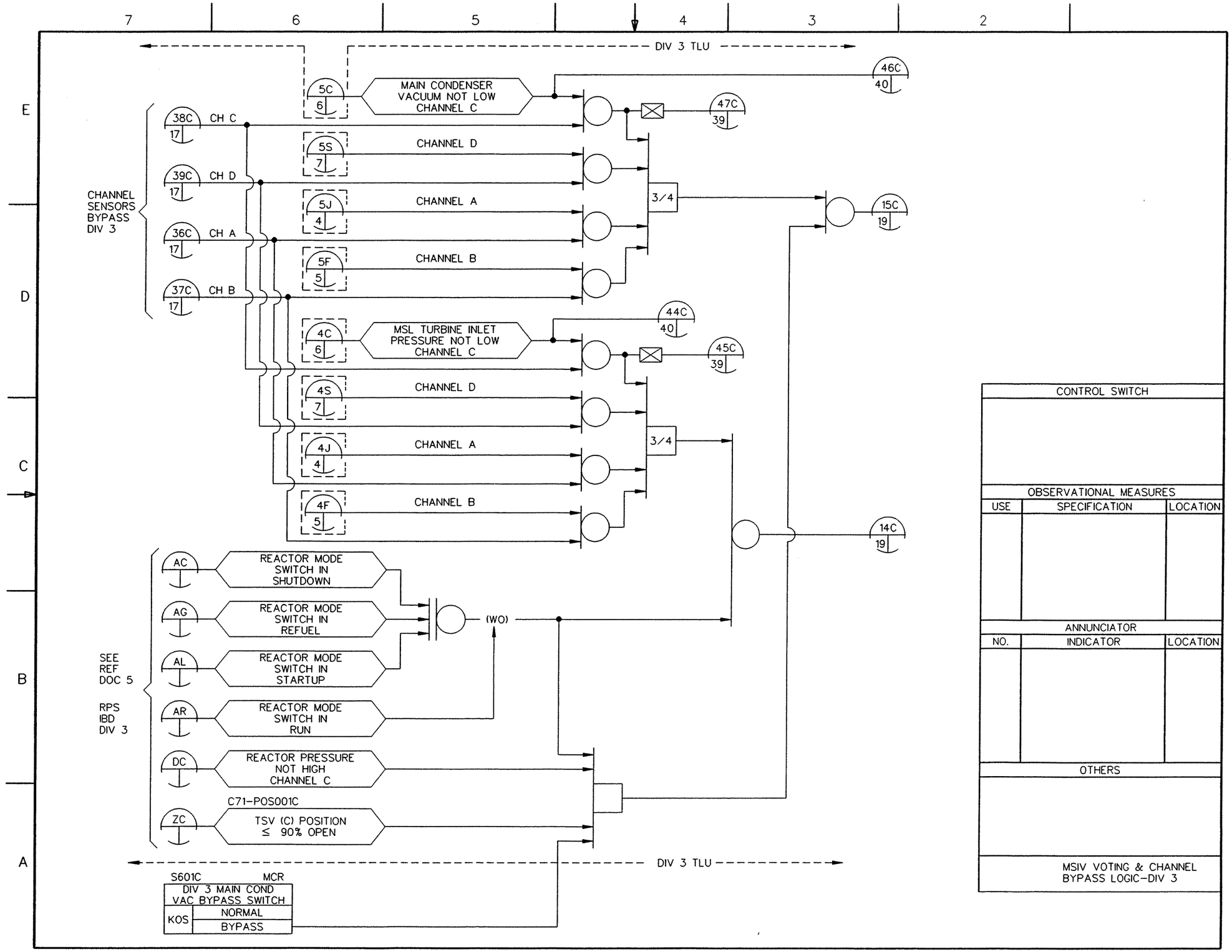

FIGURE 7.3–5 LEAK DETECTION AND ISOLATION SYSTEM IBD (Sheet 18 of 77)

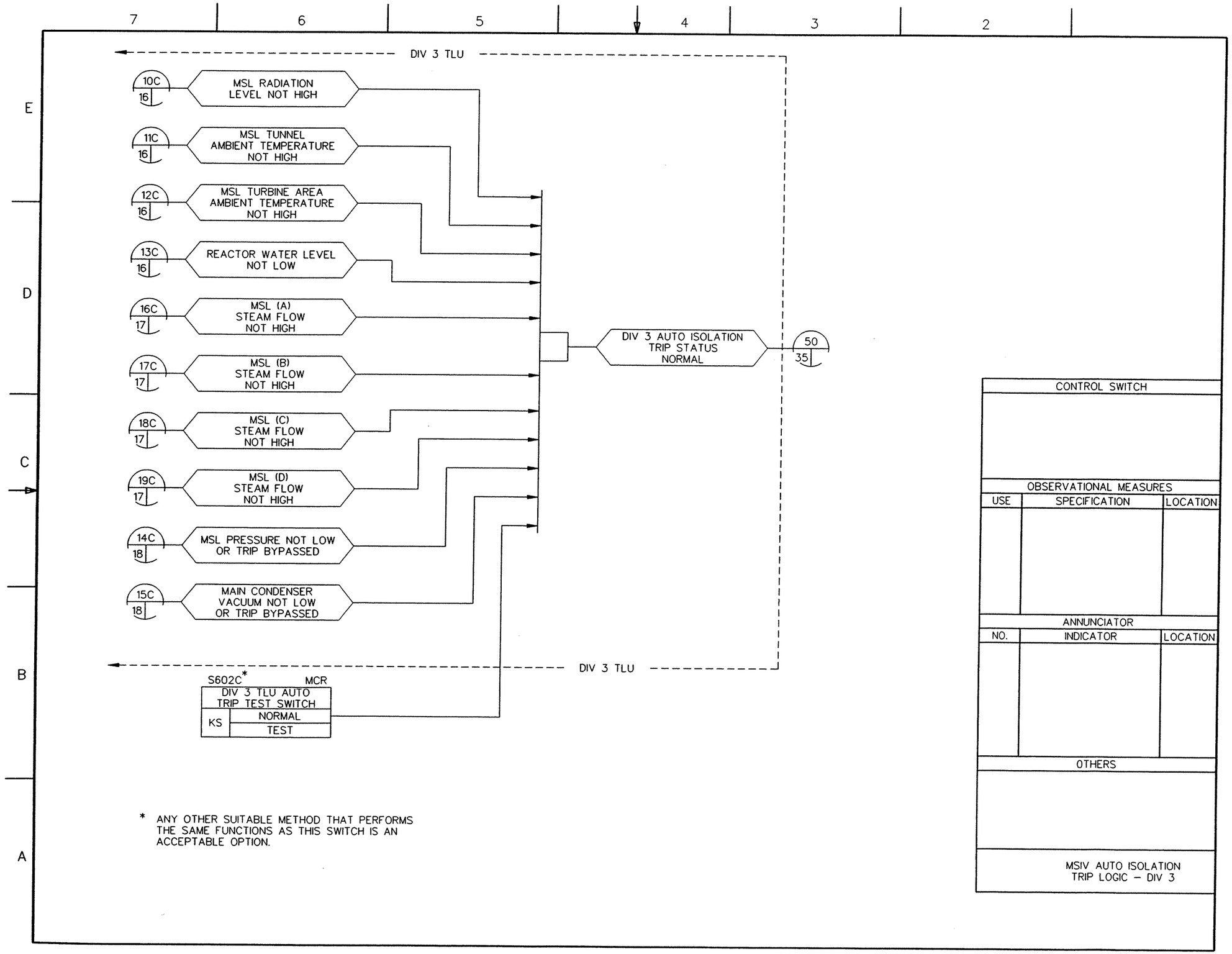

FIGURE 7.3–5 LEAK DETECTION AND ISOLATION SYSTEM IBD (Sheet 19 of 77)

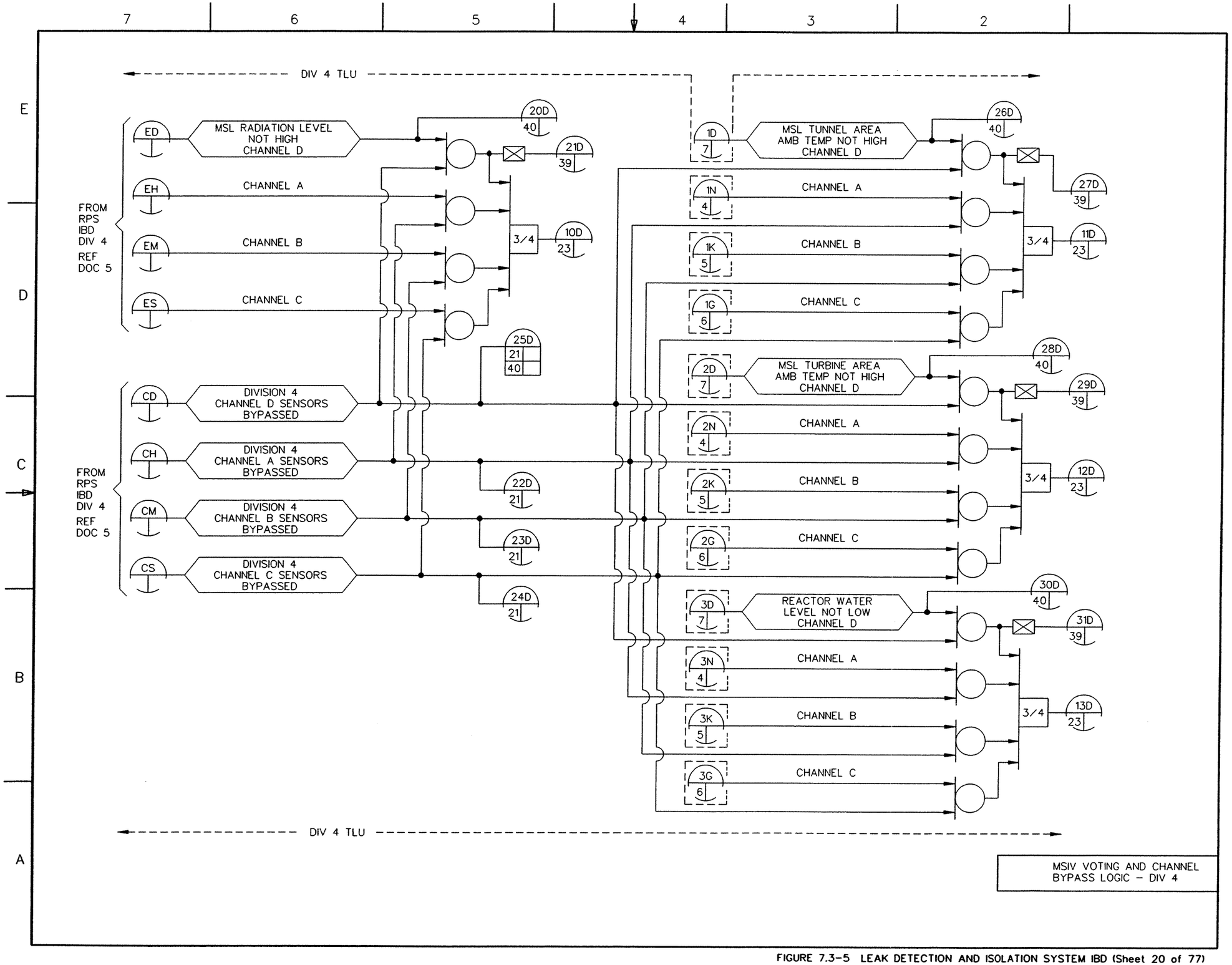

FIGURE 7.3-5 LEAK DETECTION AND ISOLATION SYSTEM IBD (Sheet 20 of 77)

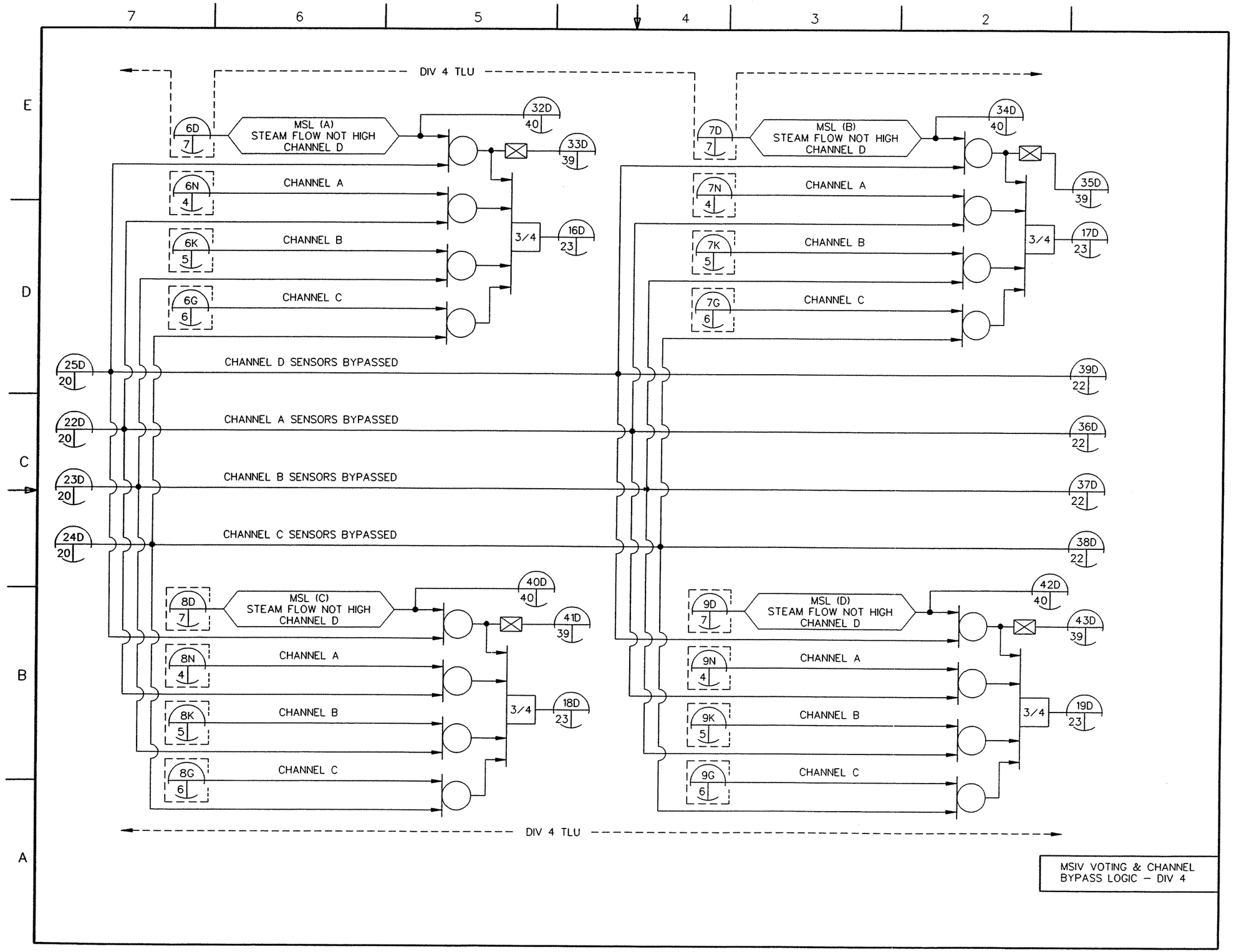

FIGURE 7.3–5 LEAK DETECTION AND ISOLATION SYSTEM IBD (Sheet 21 of 77)

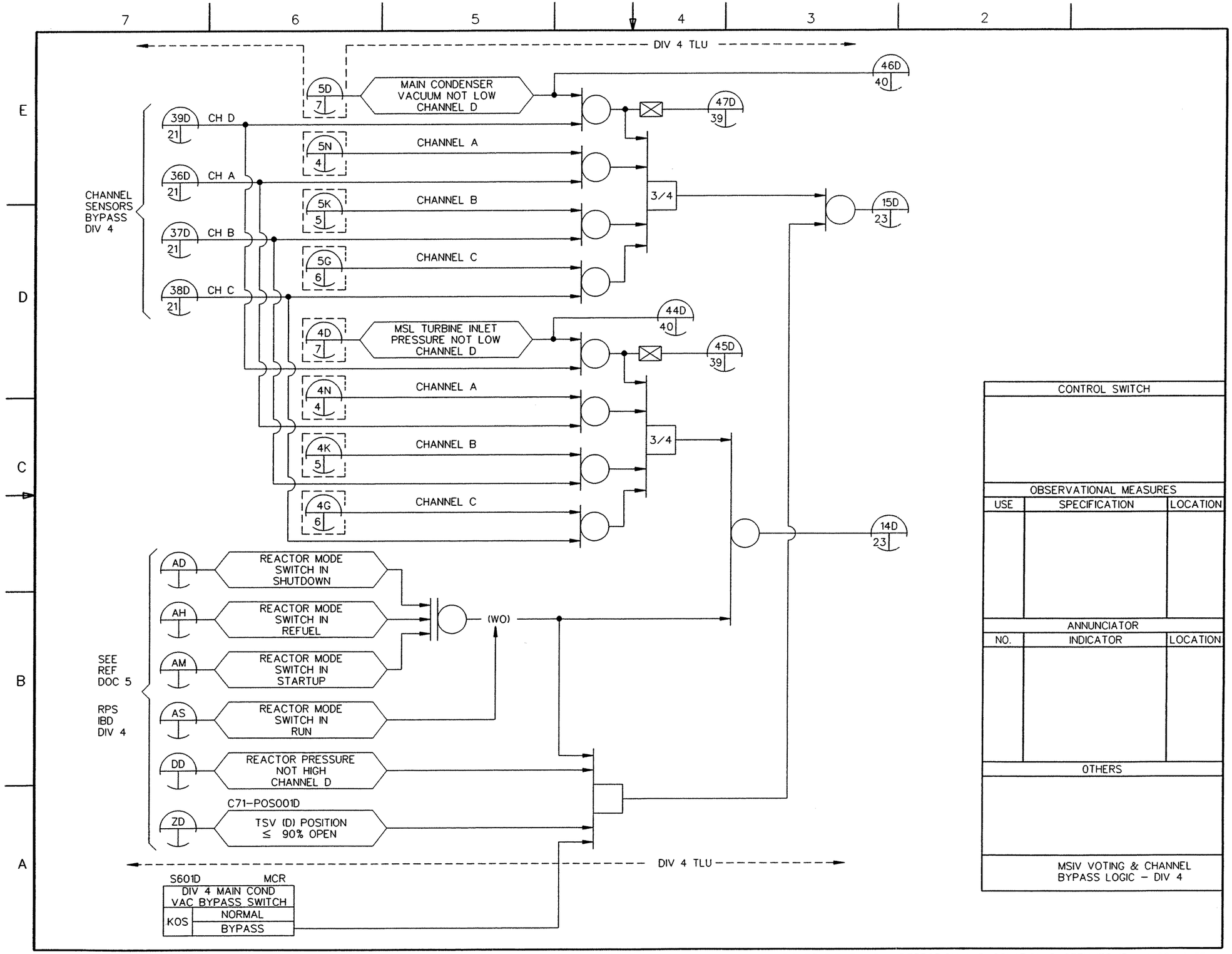

FIGURE 7.3–5 LEAK DETECTION AND ISOLATION SYSTEM IBD (Sheet 22 of 77)

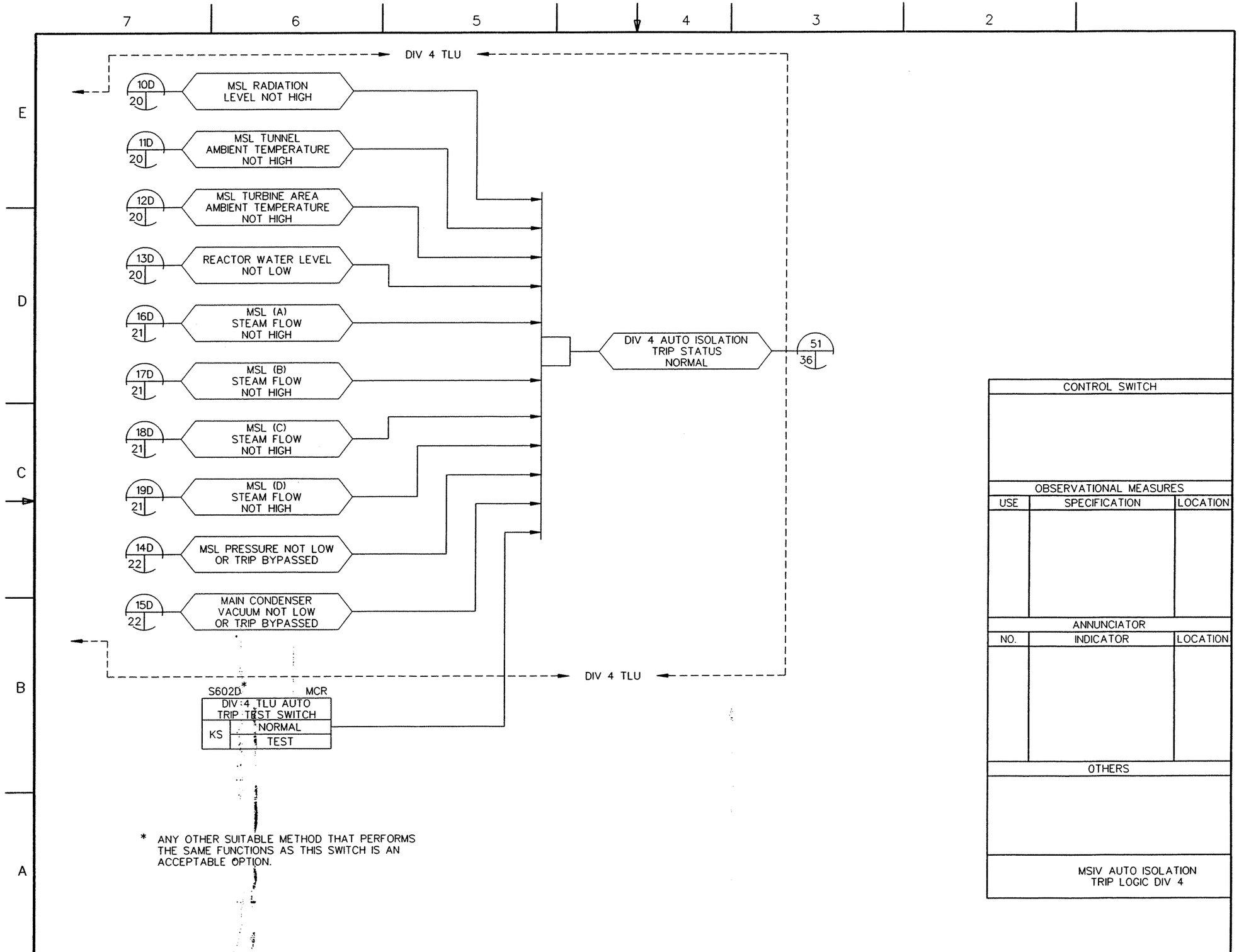

FIGURE 7.3-5 LEAK DETECTION AND ISOLATION SYSTEM IBD (Sheet 23 of 77)

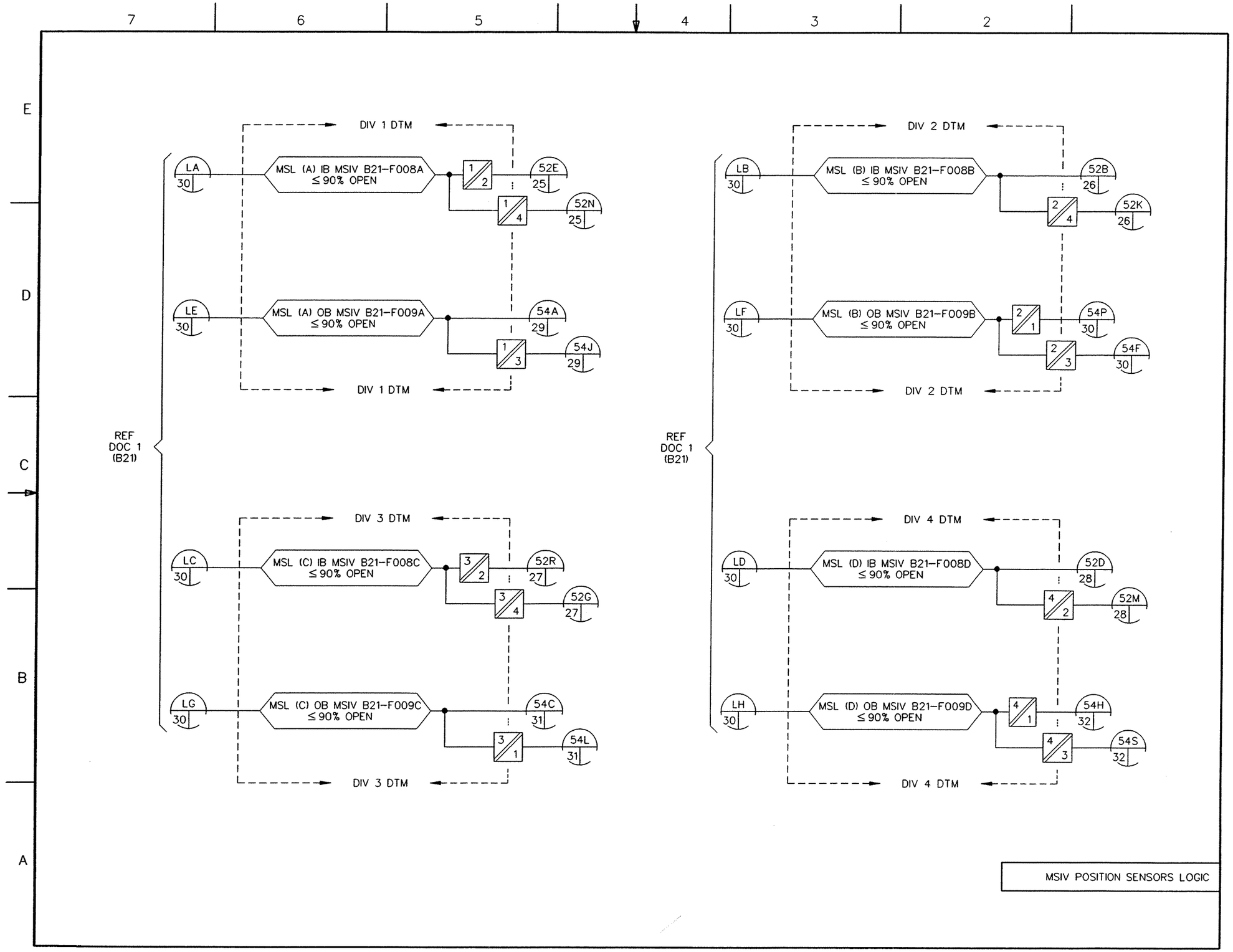

FIGURE 7.3-5 LEAK DETECTION AND ISOLATION SYSTEM IBD (Sheet 24 of 77)

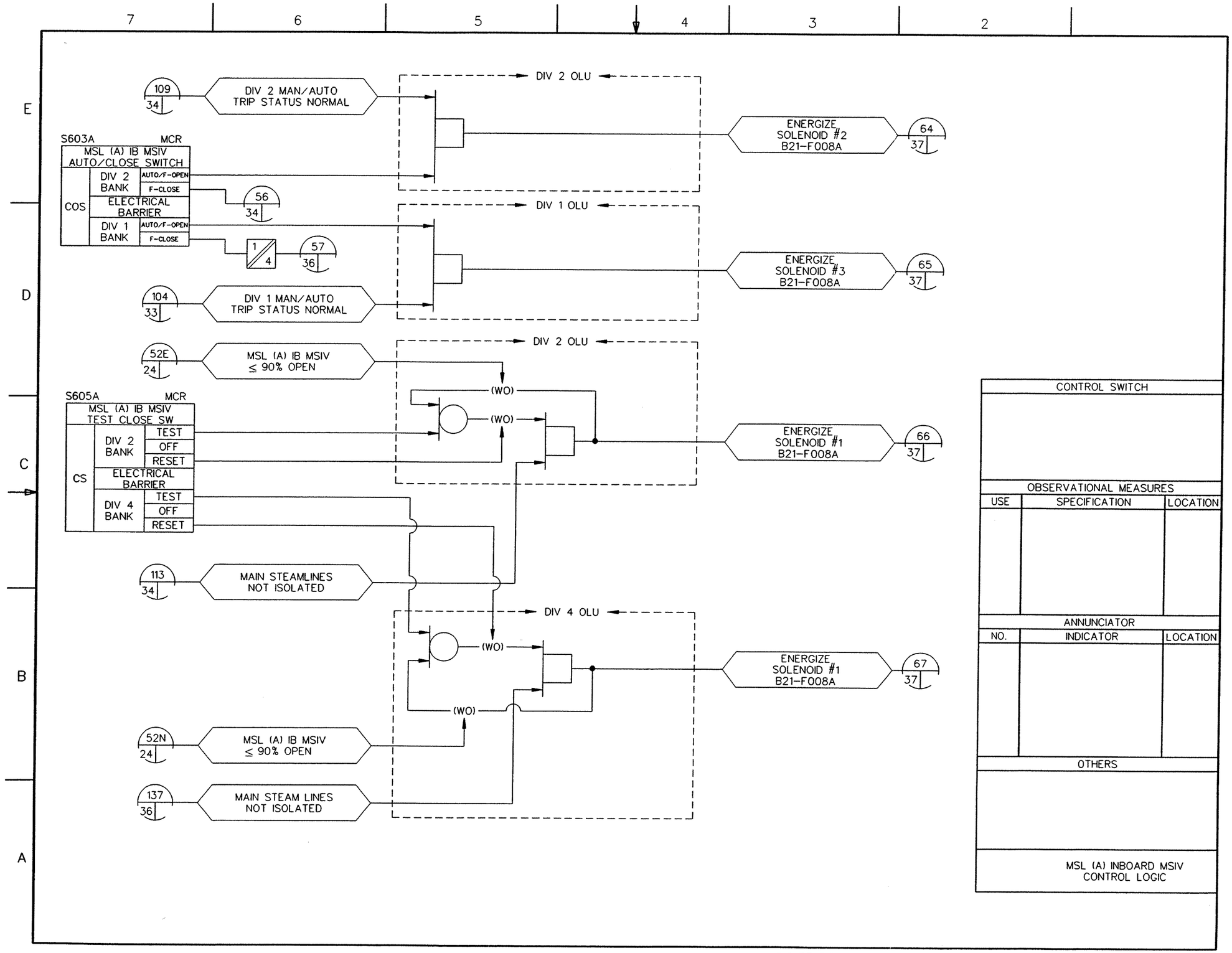

FIGURE 7.3-5 LEAK DETECTION AND ISOLATION SYSTEM IBD (Sheet 25 of 77)

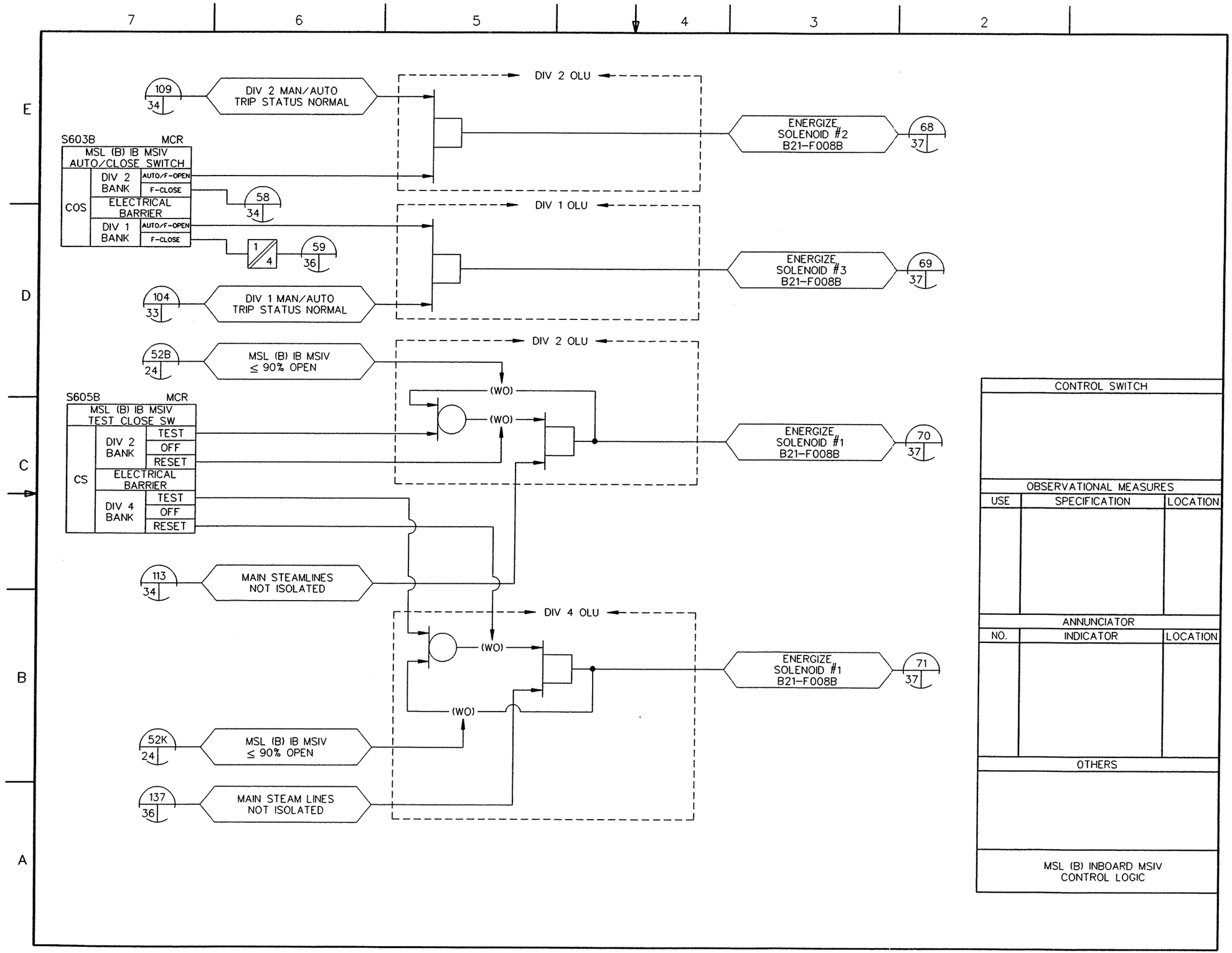

FIGURE 7.3-5 LEAK DETECTION AND ISOLATION SYSTEM IBD (Sheet 26 of 77)

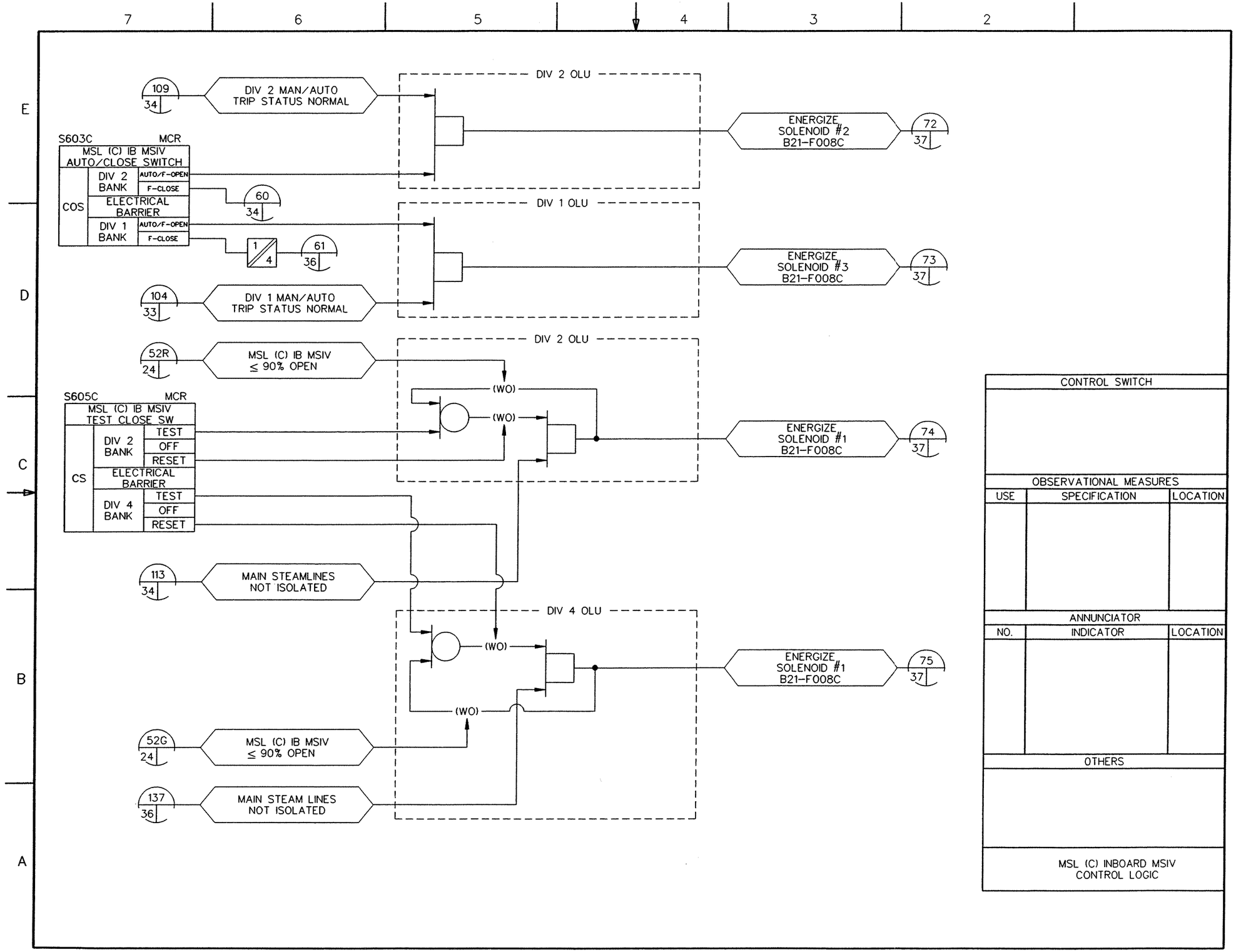

FIGURE 7.3-5 LEAK DETECTION AND ISOLATION SYSTEM IBD (Sheet 27 of 77)

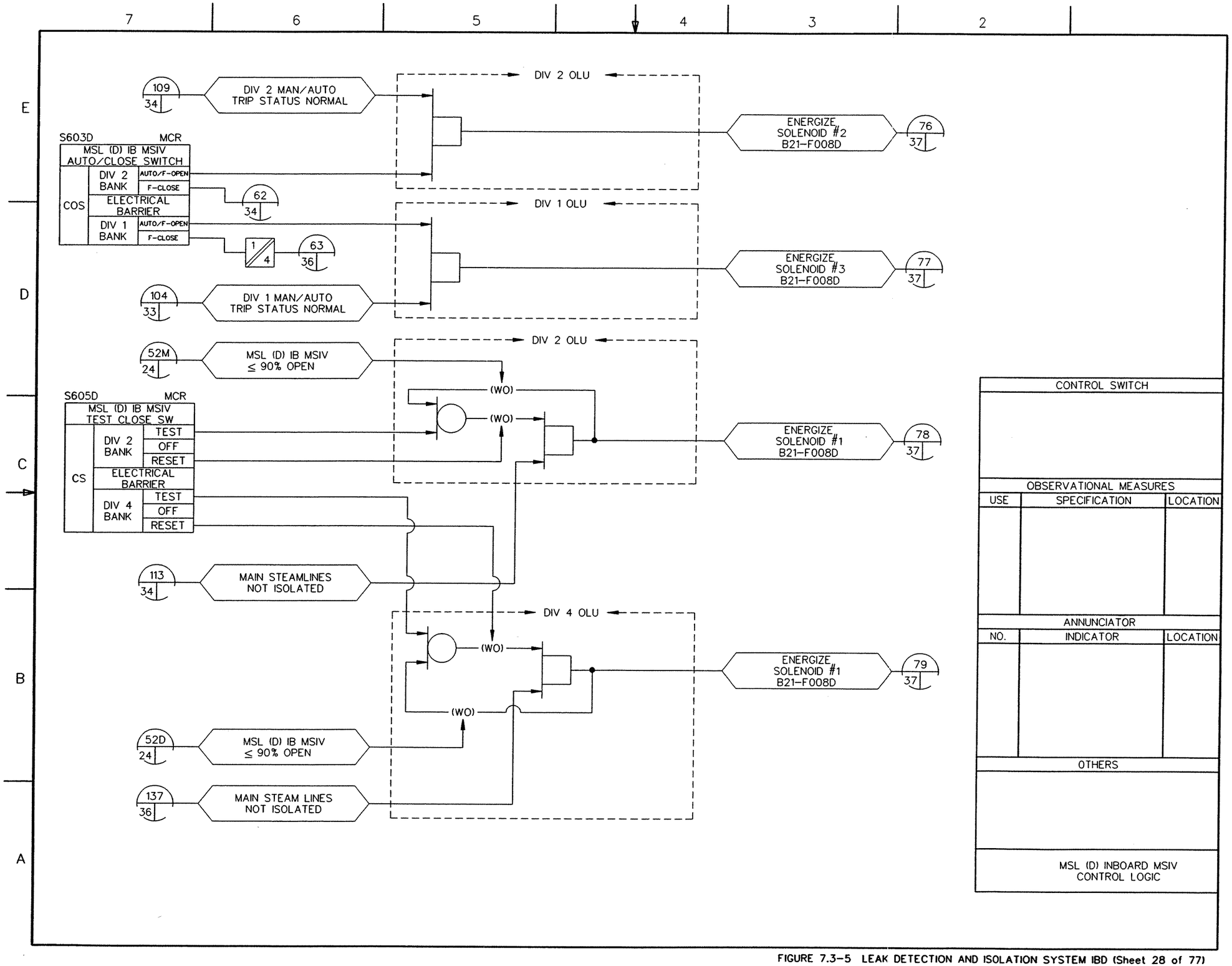

FIGURE 7.3-5 LEAK DETECTION AND ISOLATION SYSTEM IBD (Sheet 28 of 77)

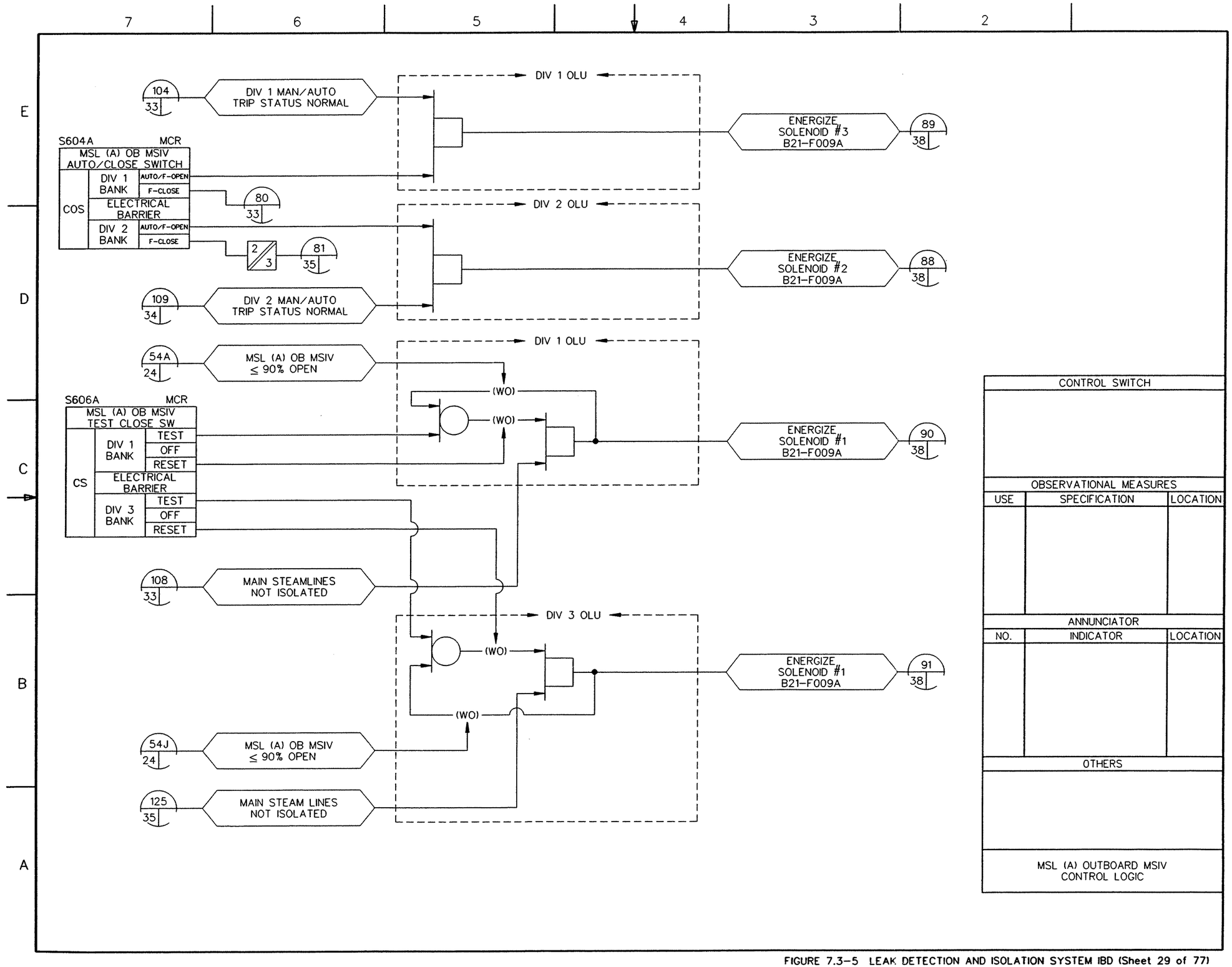

FIGURE 7.3-5 LEAK DETECTION AND ISOLATION SYSTEM IBD (Sheet 29 of 77)

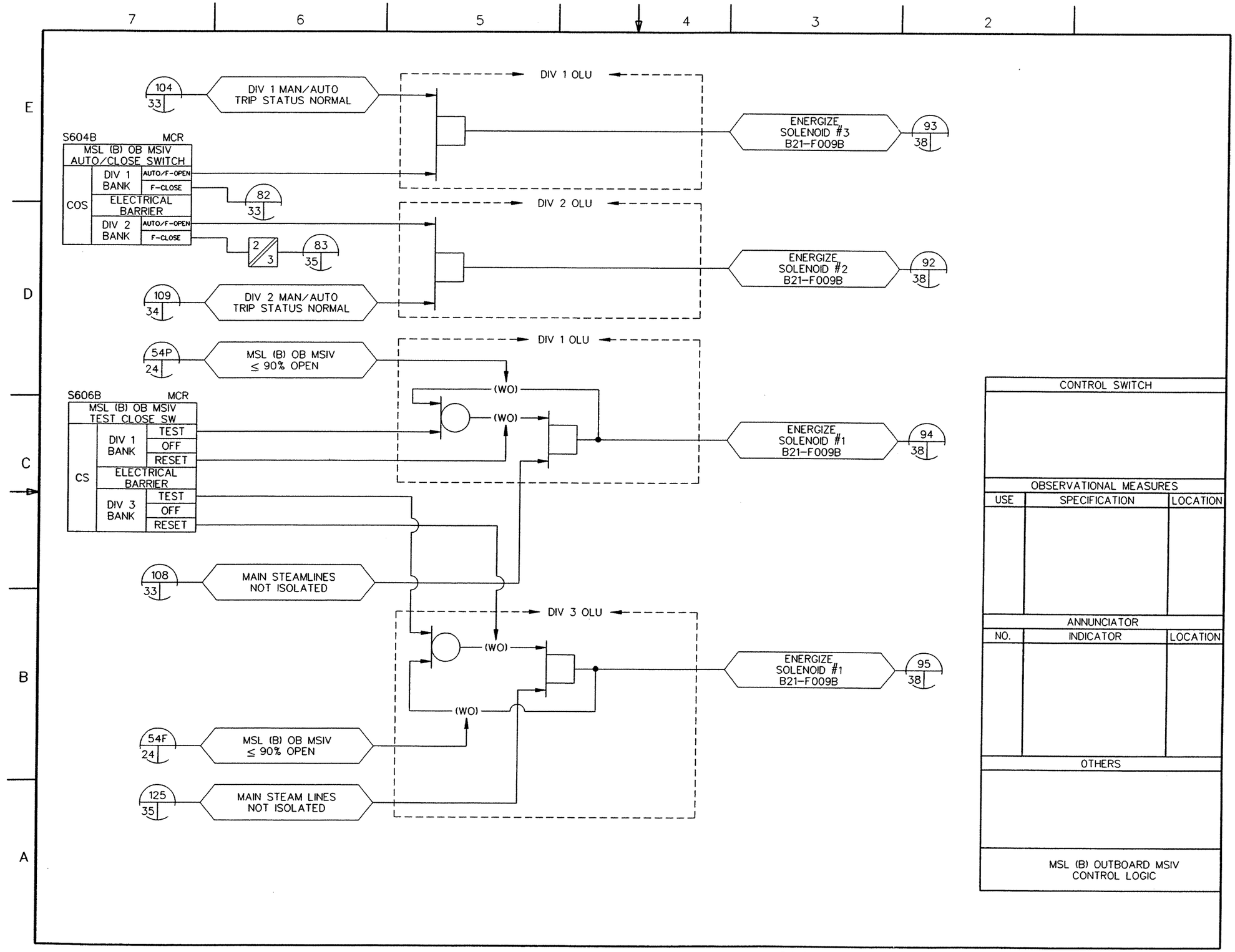

FIGURE 7.3-5 LEAK DETECTION AND ISOLATION SYSTEM IBD (Sheet 30 of 77)

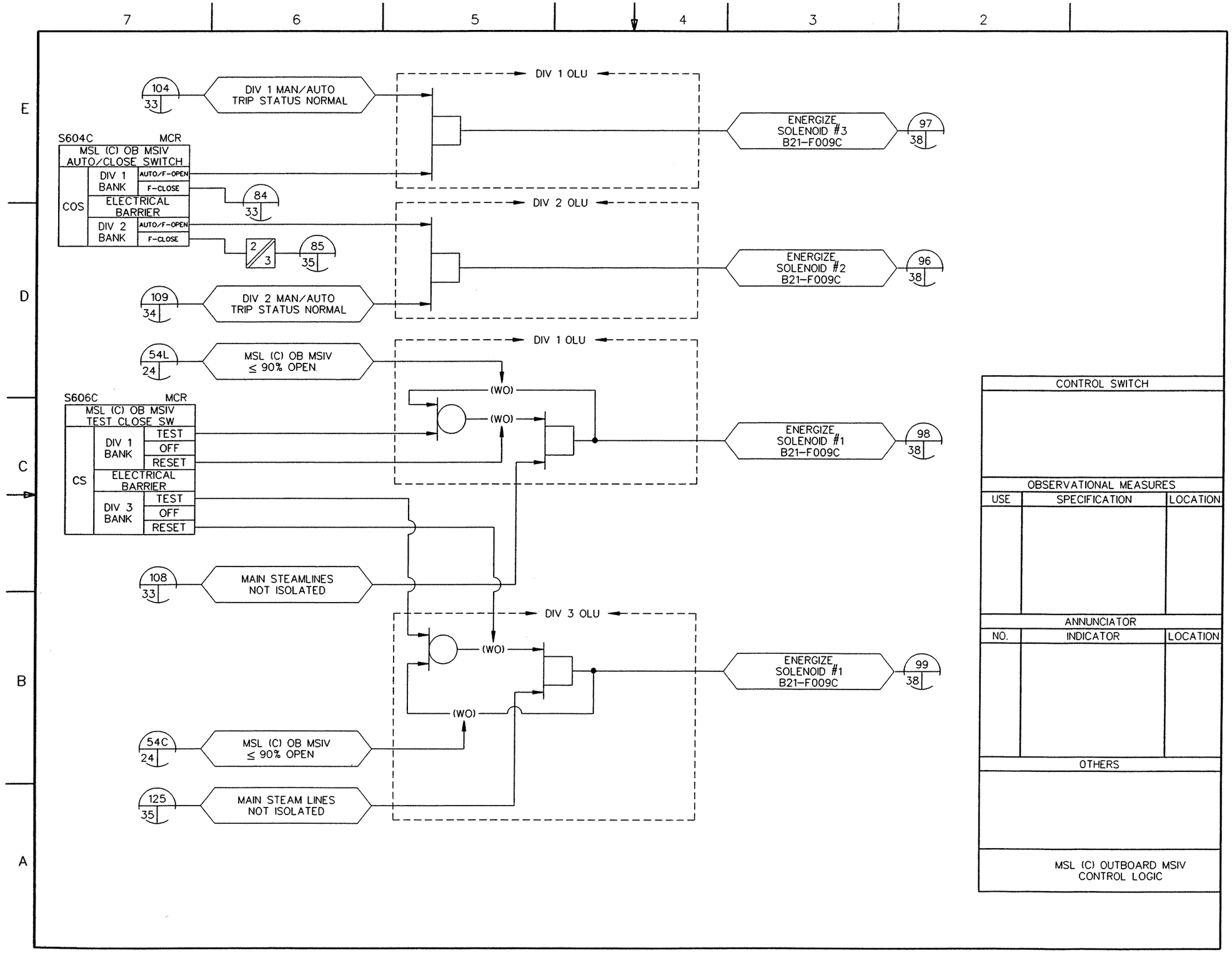

FIGURE 7.3-5 LEAK DETECTION AND ISOLATION SYSTEM IBD (Sheet 31 of 77)

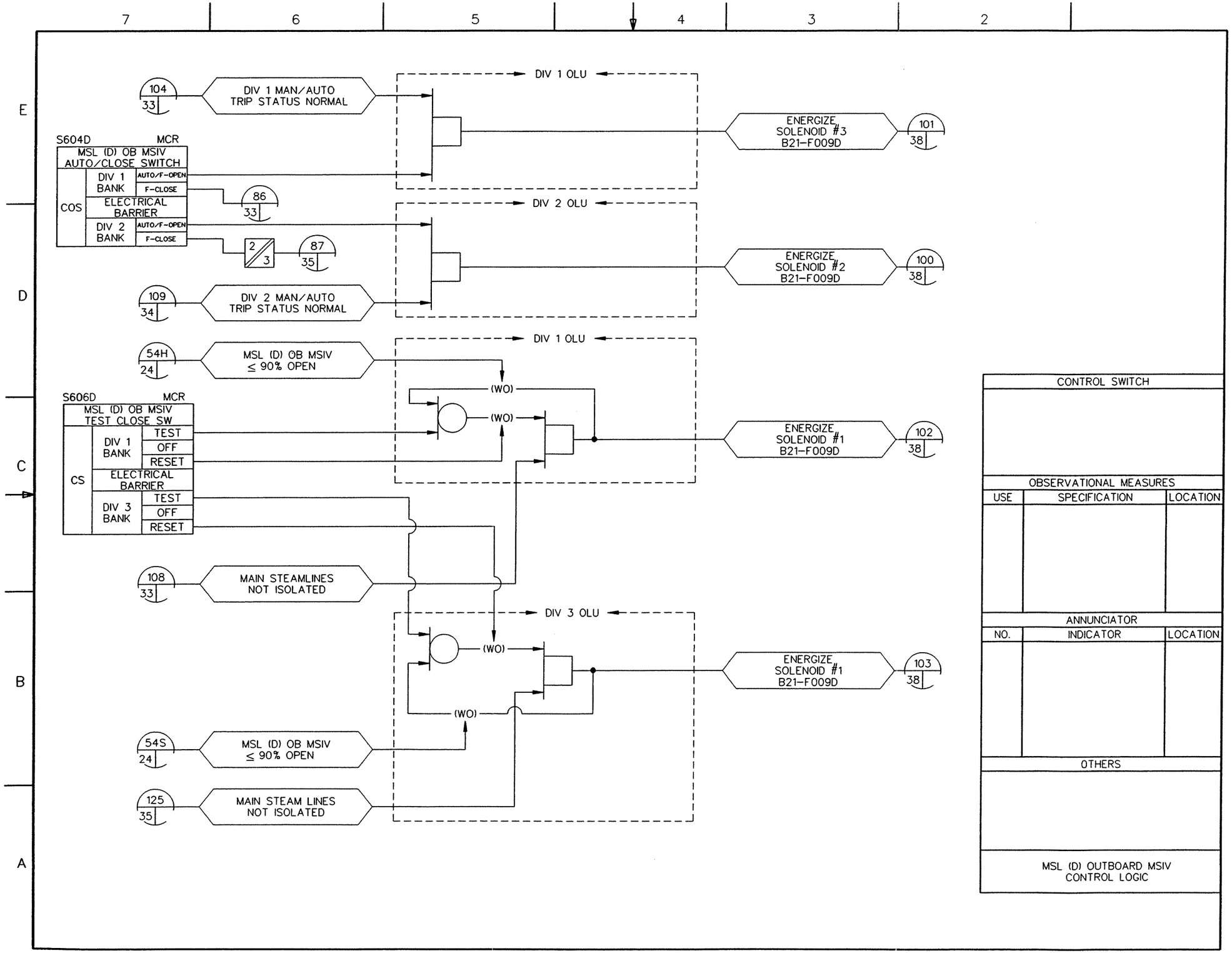

FIGURE 7.3-5 LEAK DETECTION AND ISOLATION SYSTEM IBD (Sheet 32 of 77)

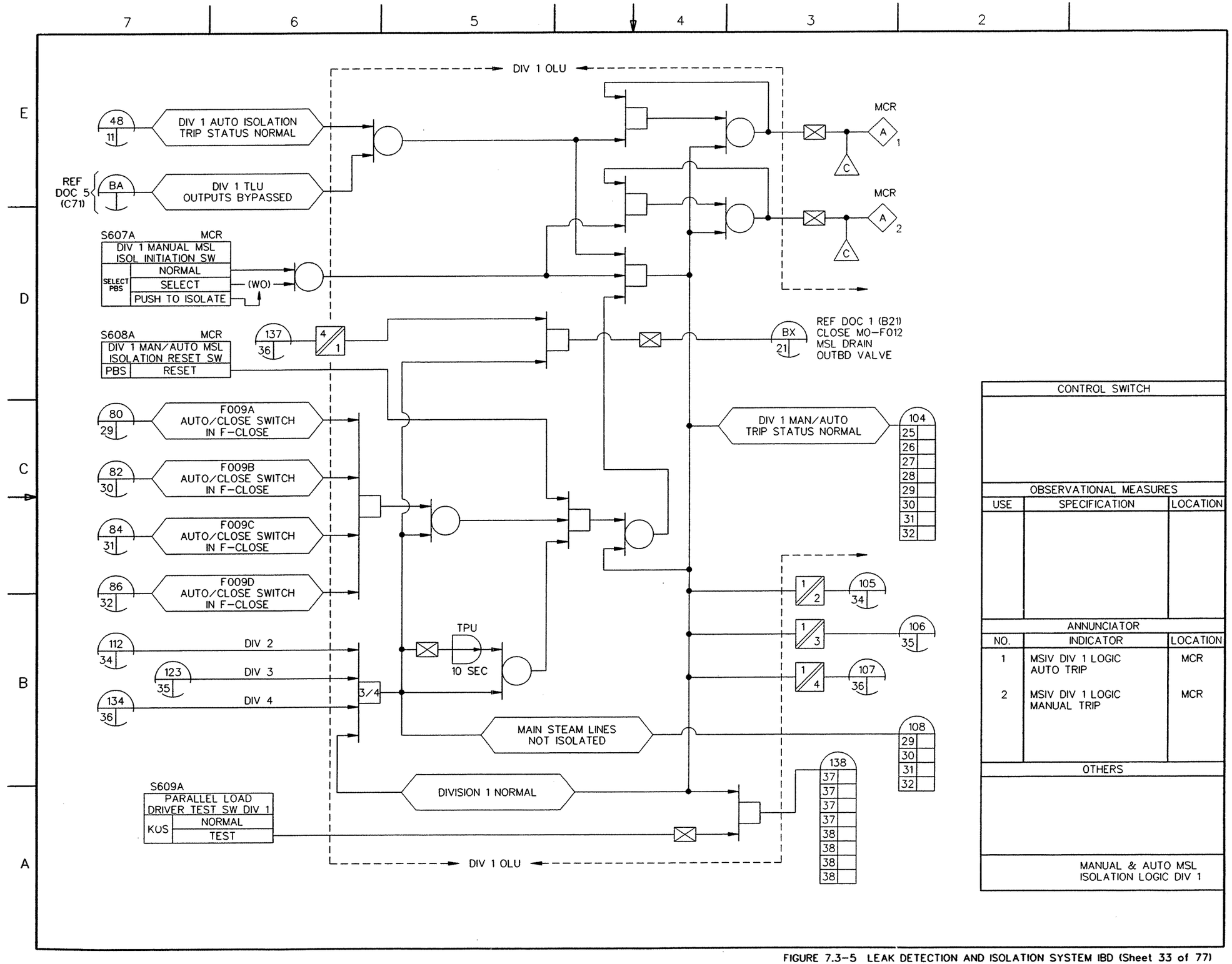

FIGURE 7.3-5 LEAK DETECTION AND ISOLATION SYSTEM IBD (Sheet 33 of 77)

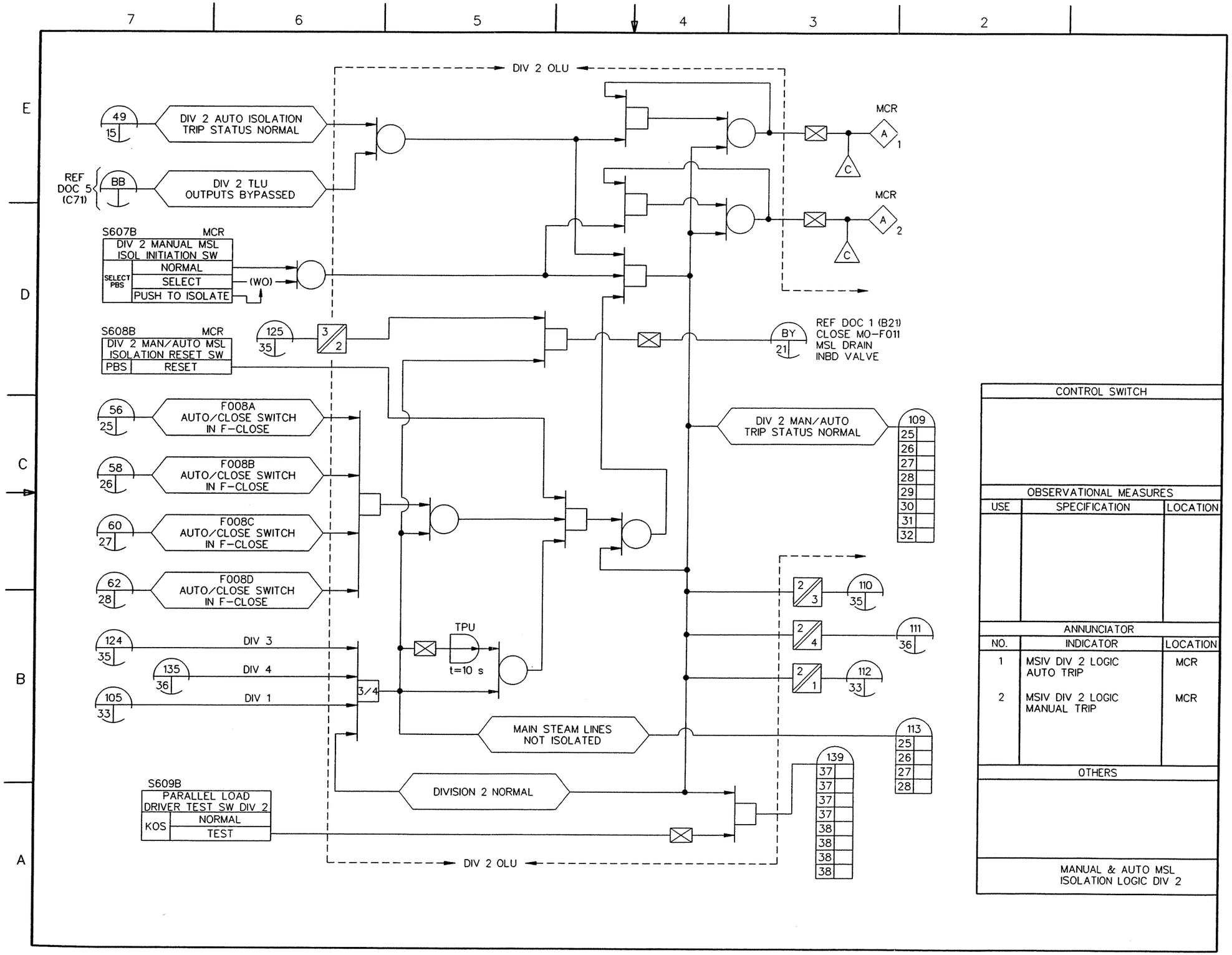

FIGURE 7.3-5 LEAK DETECTION AND ISOLATION SYSTEM IBD (Sheet 34 of 77)

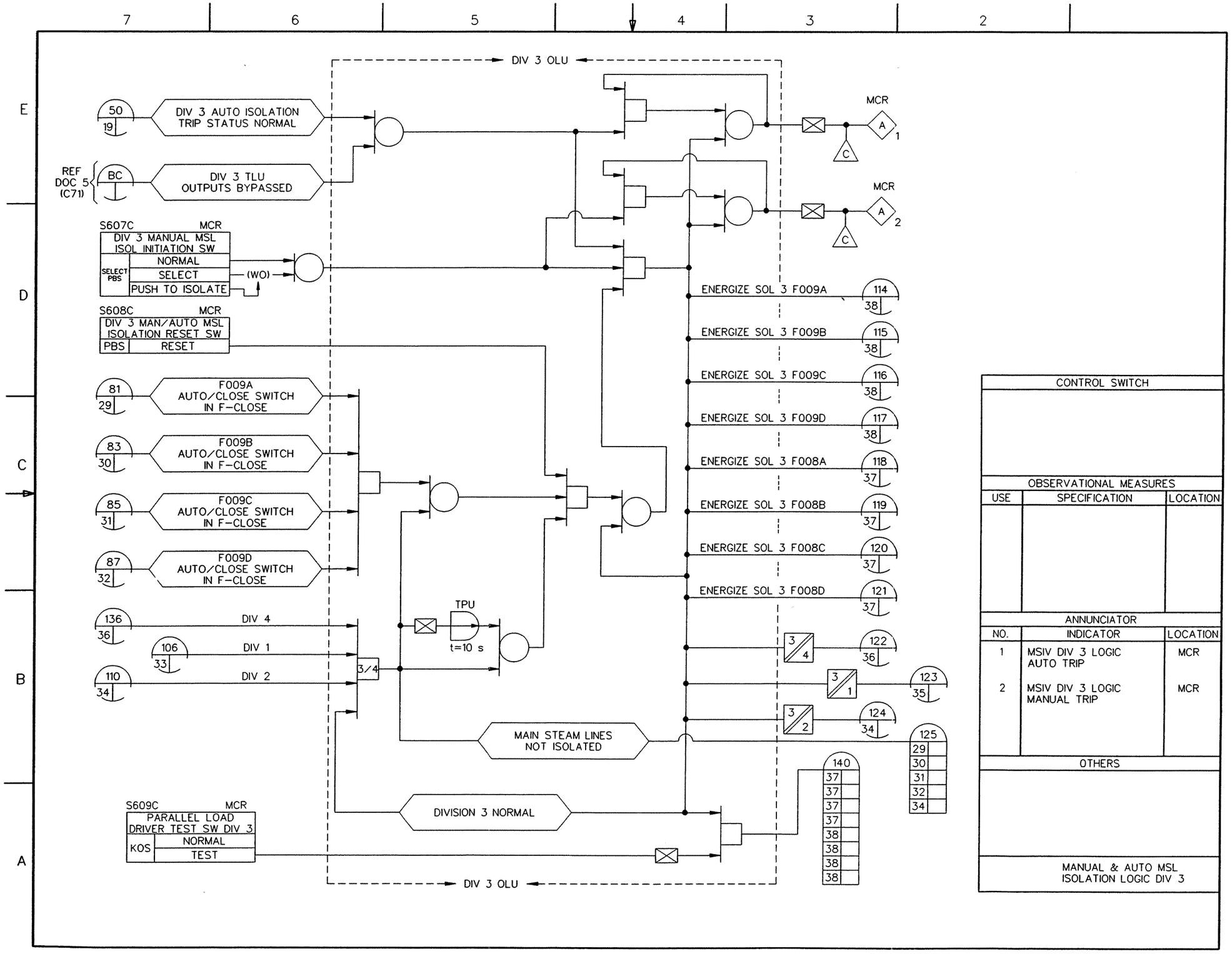

FIGURE 7.3-5 LEAK DETECTION AND ISOLATION SYSTEM IBD (Sheet 35 of 77)

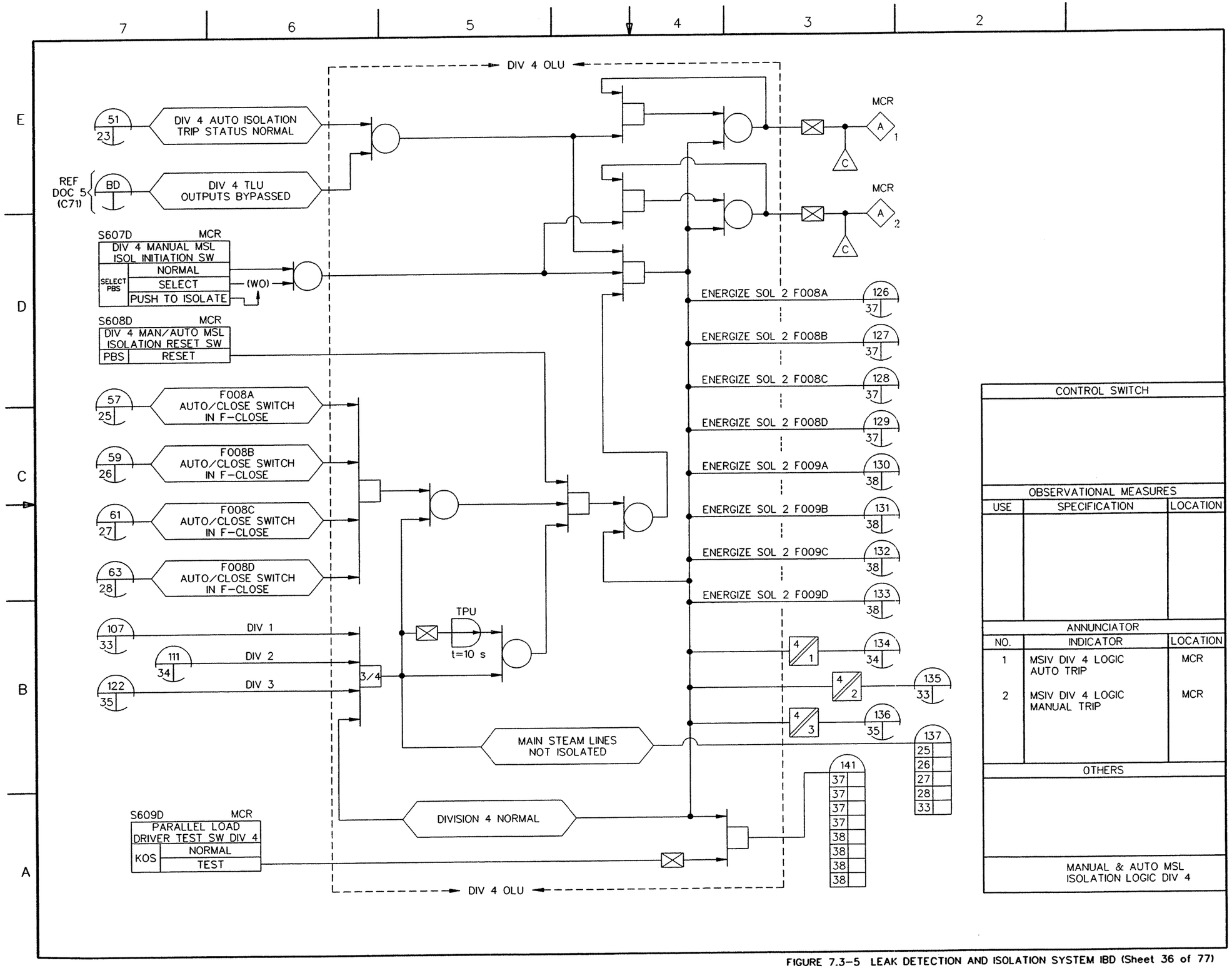

FIGURE 7.3-5 LEAK DETECTION AND ISOLATION SYSTEM IBD (Sheet 36 of 77)

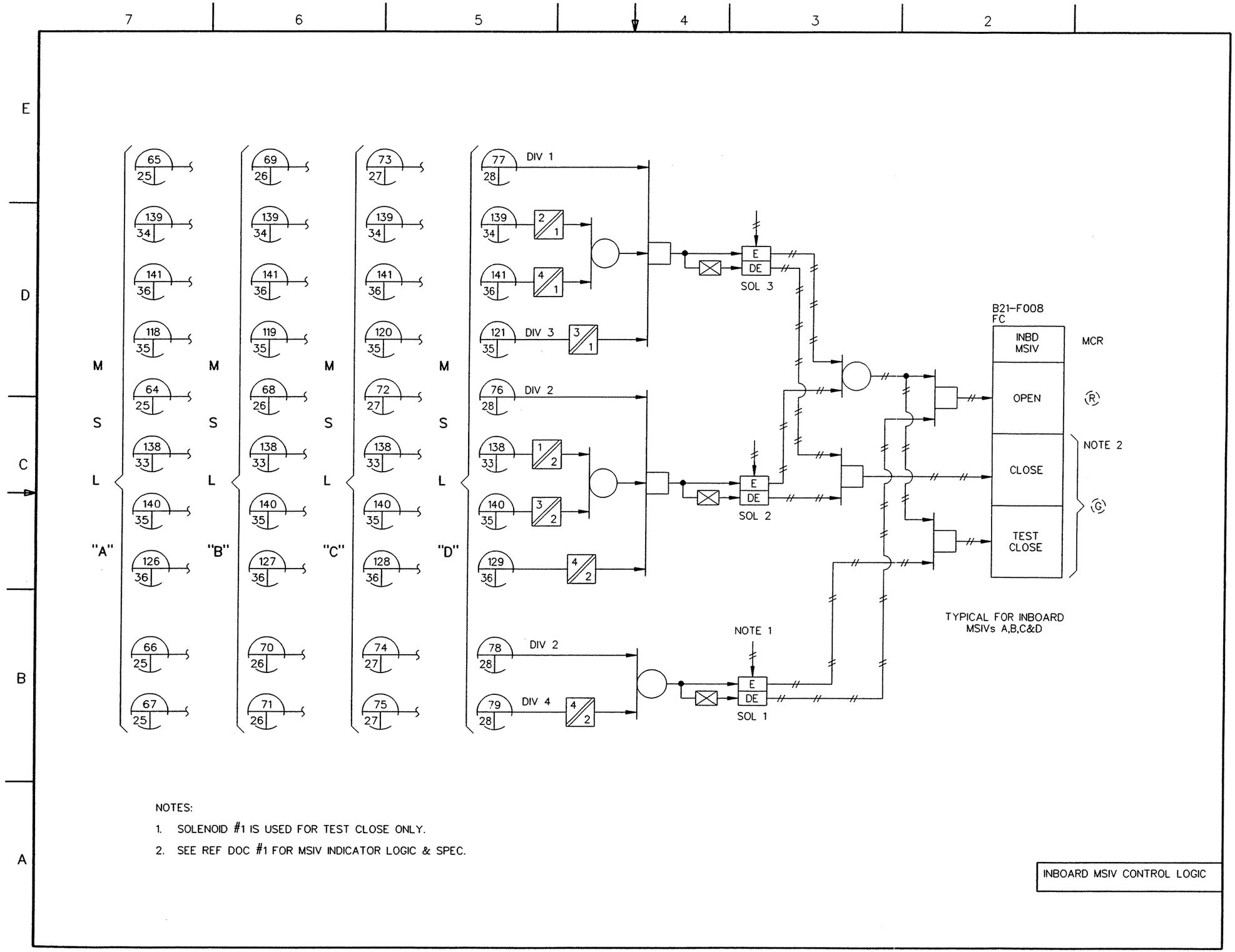

NOTES:

1. SOLENOID #1 IS USED FOR TEST CLOSE ONLY.
2. SEE REF DOC #1 FOR MSIV INDICATOR LOGIC & SPEC.

FIGURE 7.3-5 LEAK DETECTION AND ISOLATION SYSTEM IBD (Sheet 37 of 77)

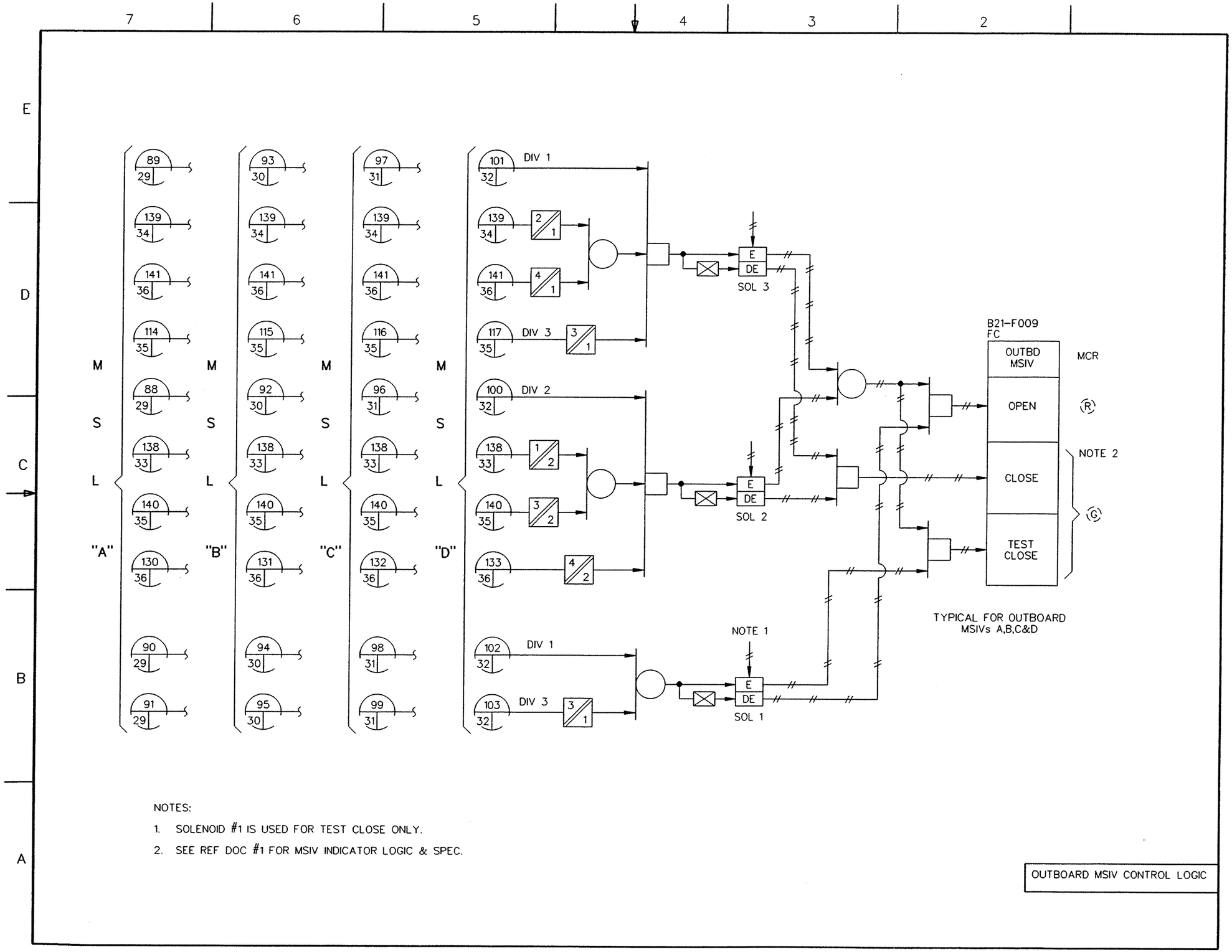

FIGURE 7.3-5 LEAK DETECTION AND ISOLATION SYSTEM IBD (Sheet 38 of 77)

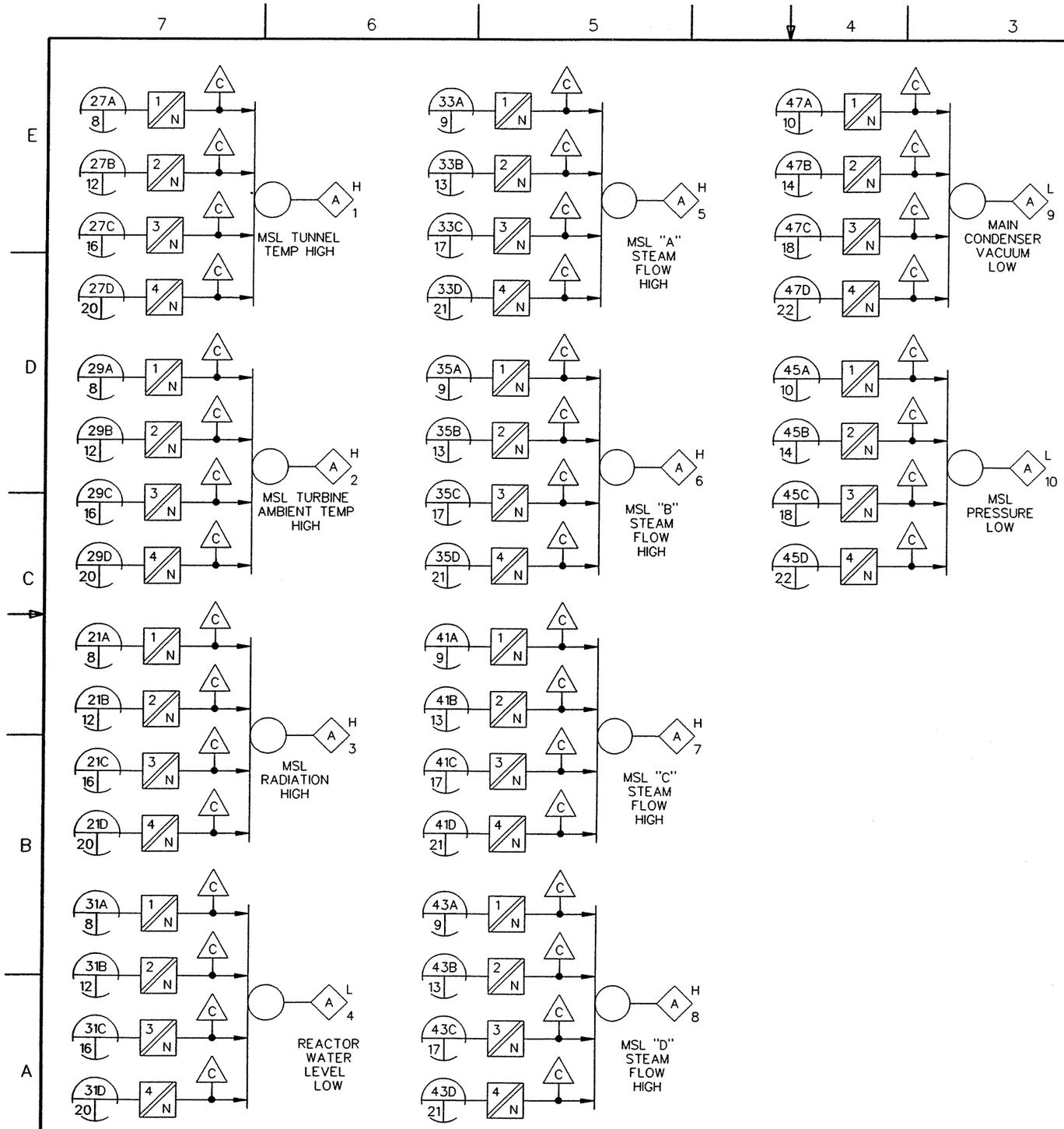

CONTROL SWITCH

OBSERVATIONAL MEASURES		
USE	SPECIFICATION	LOCATION

ANNUNCIATOR		
NO.	INDICATOR	LOCATION
1	MSL TUNNEL TEMP HIGH	MCR
2	MSL TURBINE AMBIENT TEMP HIGH	MCR
3	MSL RADIATION HIGH	MCR
4	REACTOR WATER LEVEL LOW	MCR
5	MSL "A" STEAM FLOW HIGH	MCR
6	MSL "B" STEAM FLOW HIGH	MCR
7	MSL "C" STEAM FLOW HIGH	MCR
8	MSL "D" STEAM FLOW HIGH	MCR
9	MAIN CONDENSER VACUUM LOW	MCR
10	MSL PRESSURE LOW	MCR

OTHERS

ANNUNCIATORS–MSIV TRIP INDICATION

FIGURE 7.3–5 LEAK DETECTION AND ISOLATION SYSTEM IBD (Sheet 39 of 77)

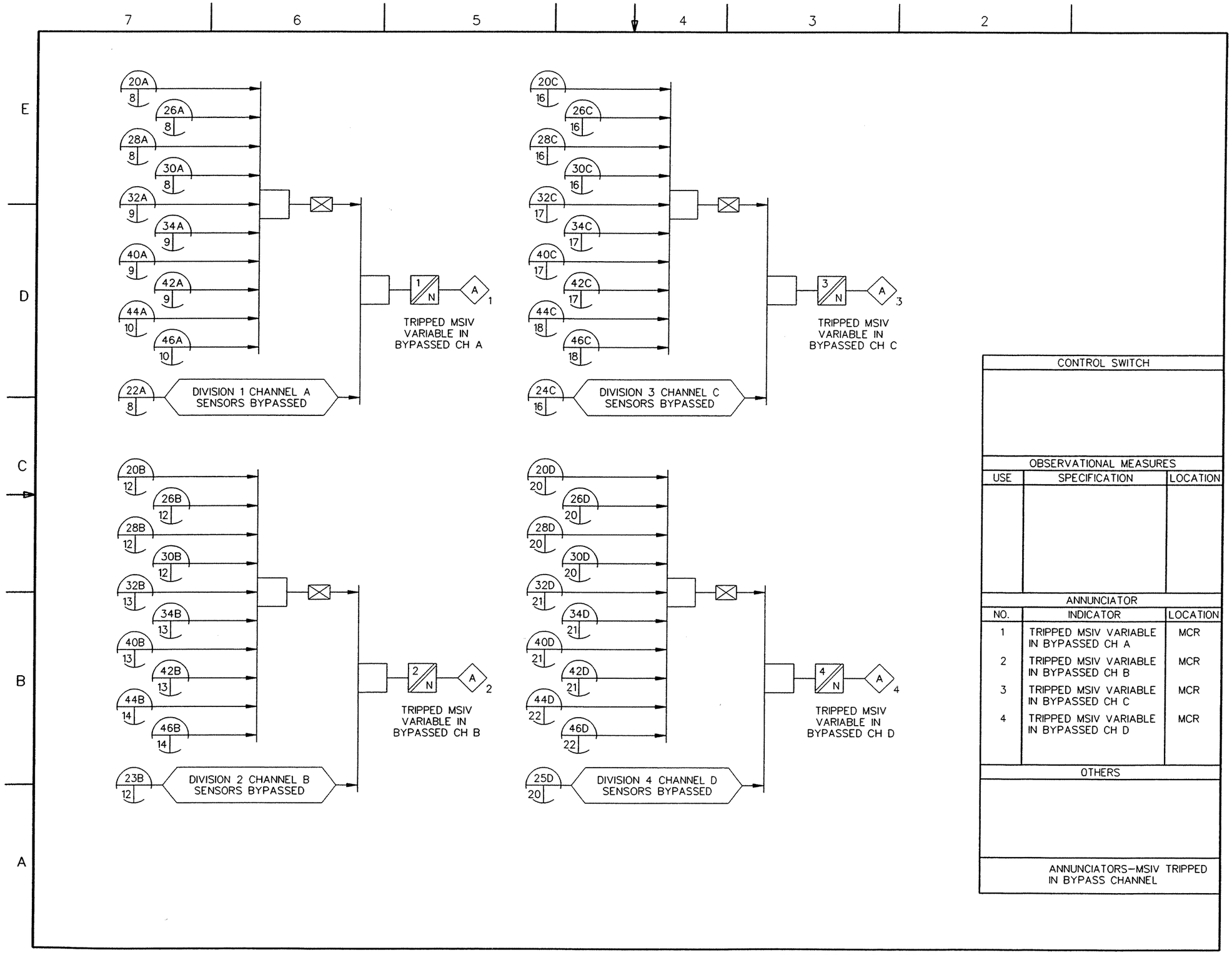

CONTROL SWITCH

OBSERVATIONAL MEASURES		
USE	SPECIFICATION	LOCATION

ANNUNCIATOR		
NO.	INDICATOR	LOCATION
1	TRIPPED MSIV VARIABLE IN BYPASSED CH A	MCR
2	TRIPPED MSIV VARIABLE IN BYPASSED CH B	MCR
3	TRIPPED MSIV VARIABLE IN BYPASSED CH C	MCR
4	TRIPPED MSIV VARIABLE IN BYPASSED CH D	MCR

OTHERS

ANNUNCIATORS–MSIV TRIPPED IN BYPASS CHANNEL

FIGURE 7.3–5 LEAK DETECTION AND ISOLATION SYSTEM IBD (Sheet 40 of 77)

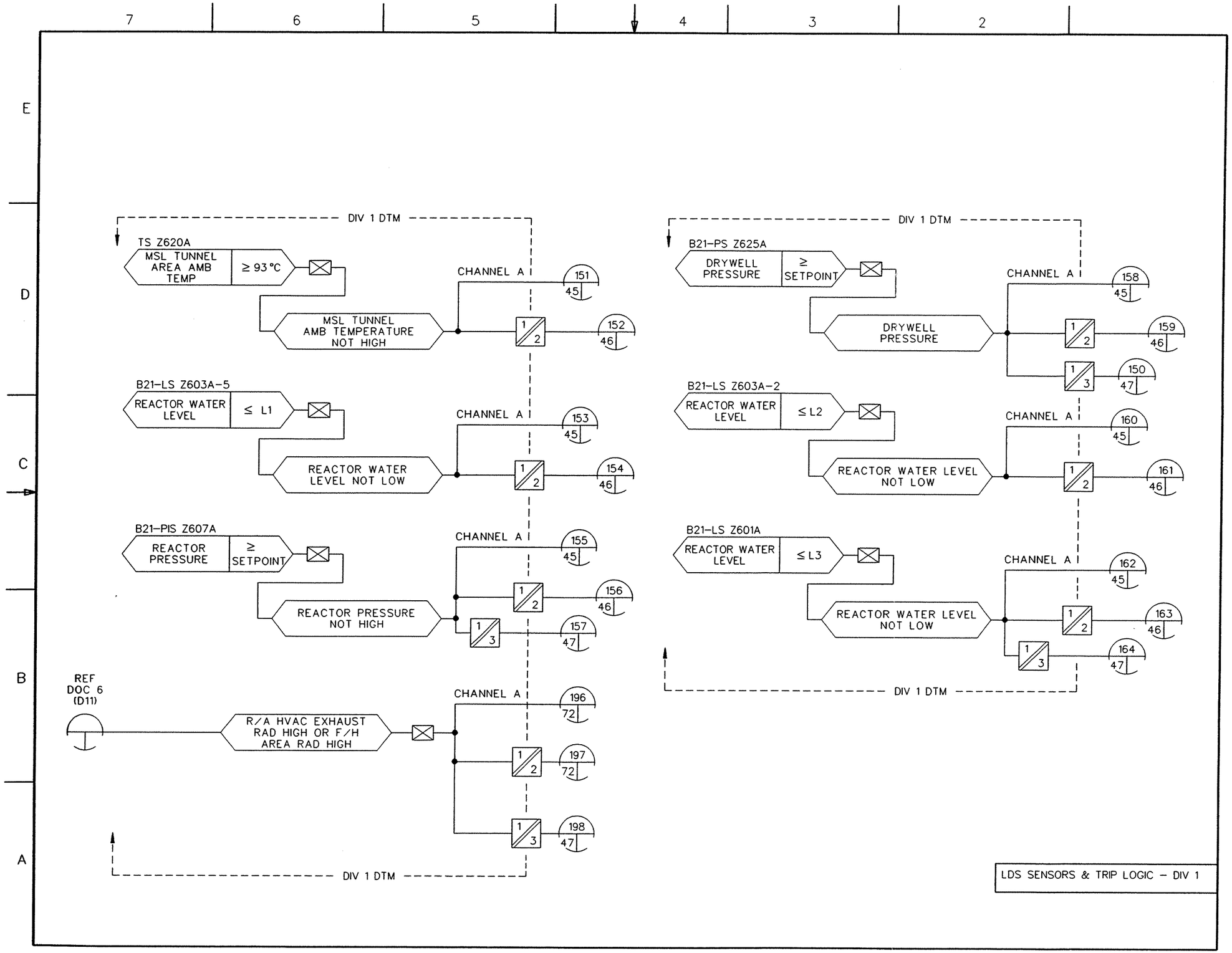

FIGURE 7.3-5 LEAK DETECTION AND ISOLATION SYSTEM IBD (Sheet 41 of 77)

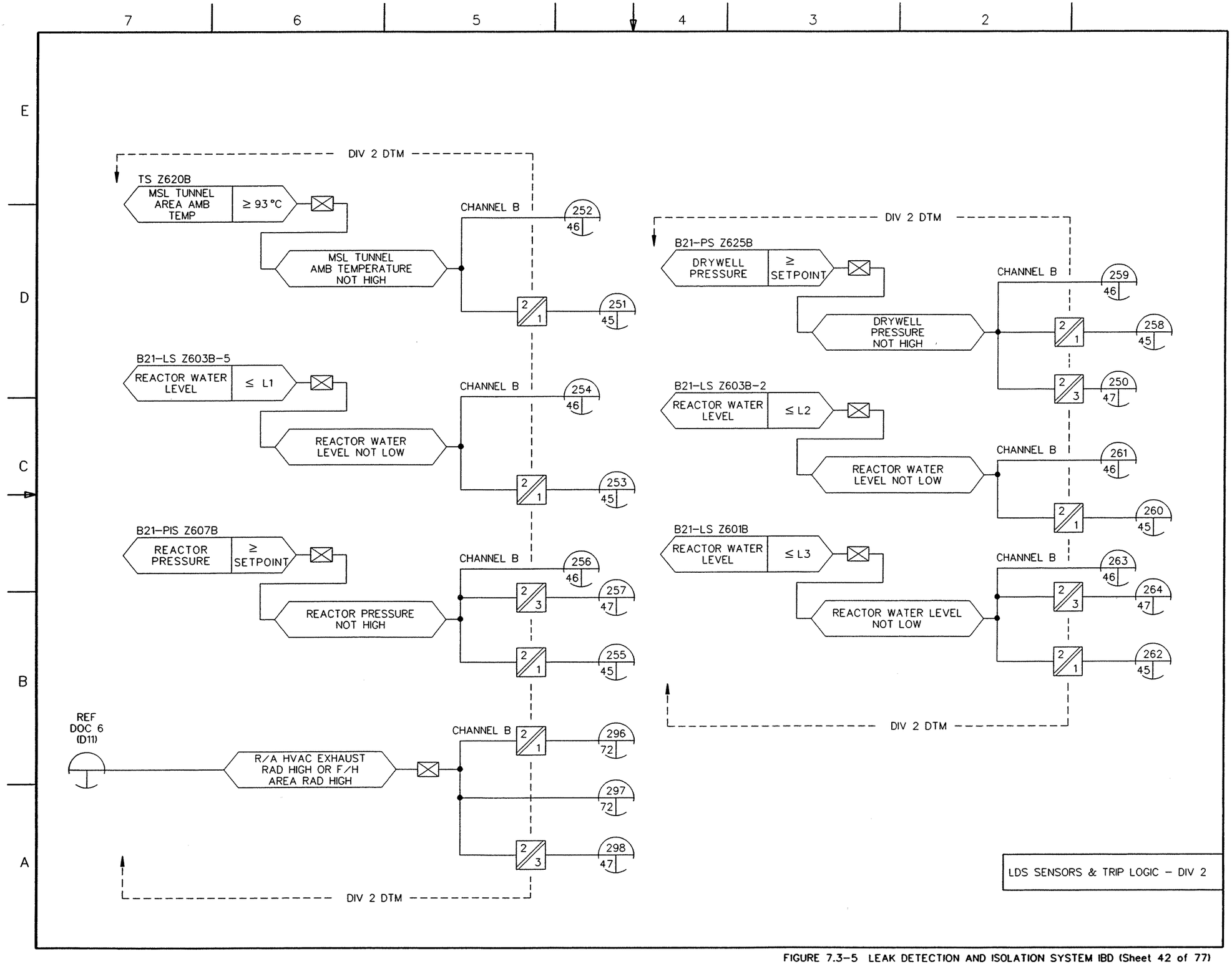

FIGURE 7.3-5 LEAK DETECTION AND ISOLATION SYSTEM IBD (Sheet 42 of 77)

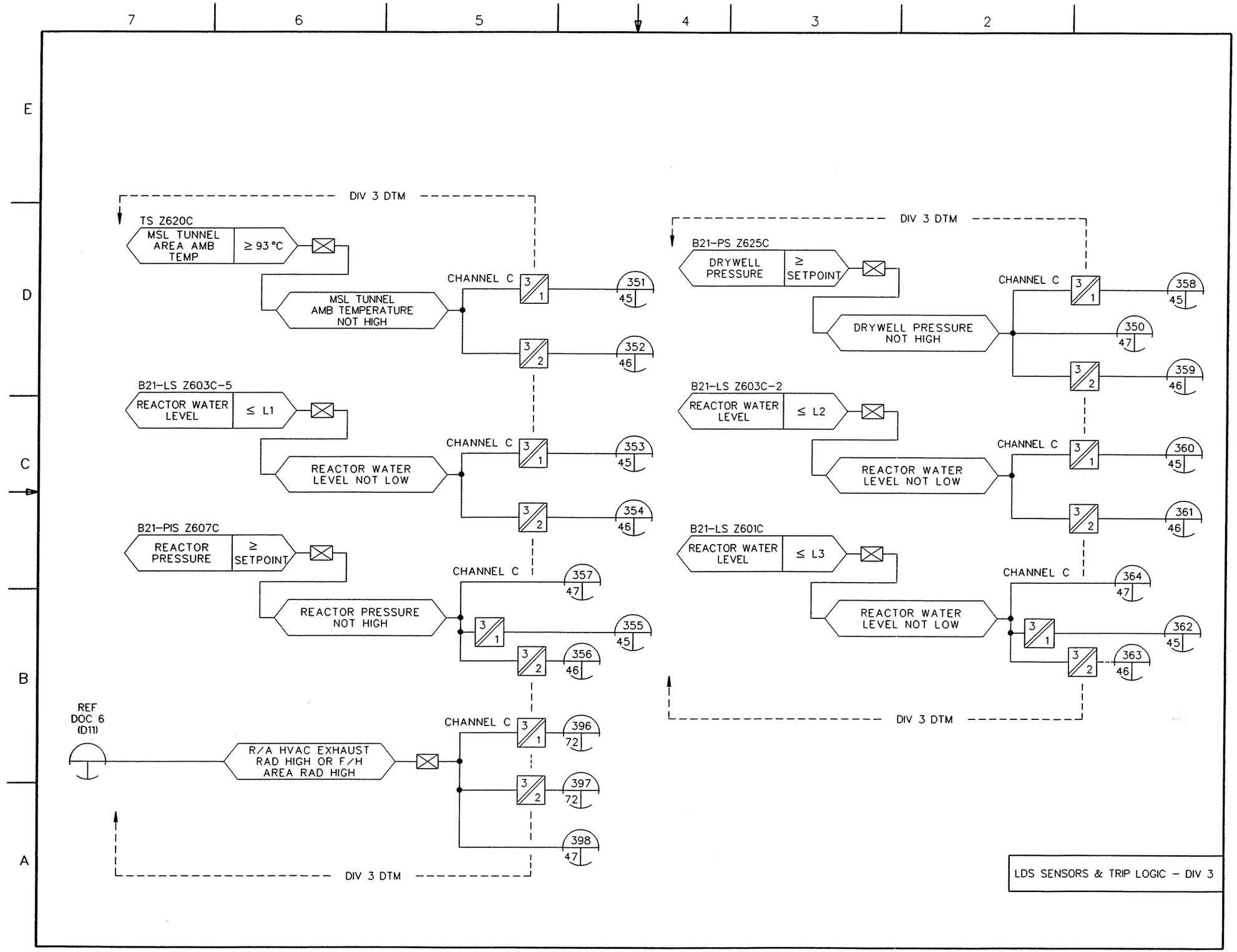

FIGURE 7.3-5 LEAK DETECTION AND ISOLATION SYSTEM IBD (Sheet 43 of 77)

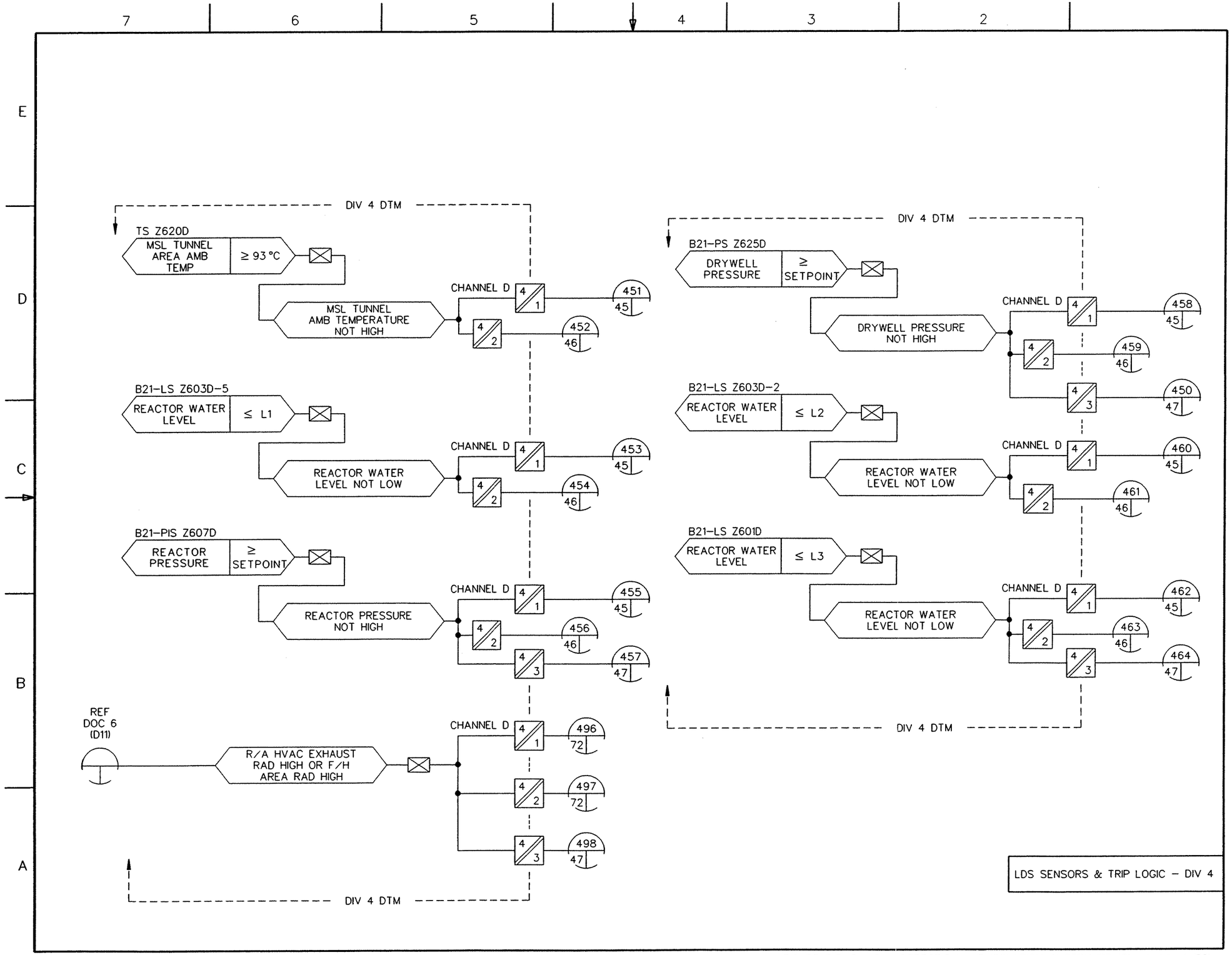

FIGURE 7.3-5 LEAK DETECTION AND ISOLATION SYSTEM IBD (Sheet 44 of 77)

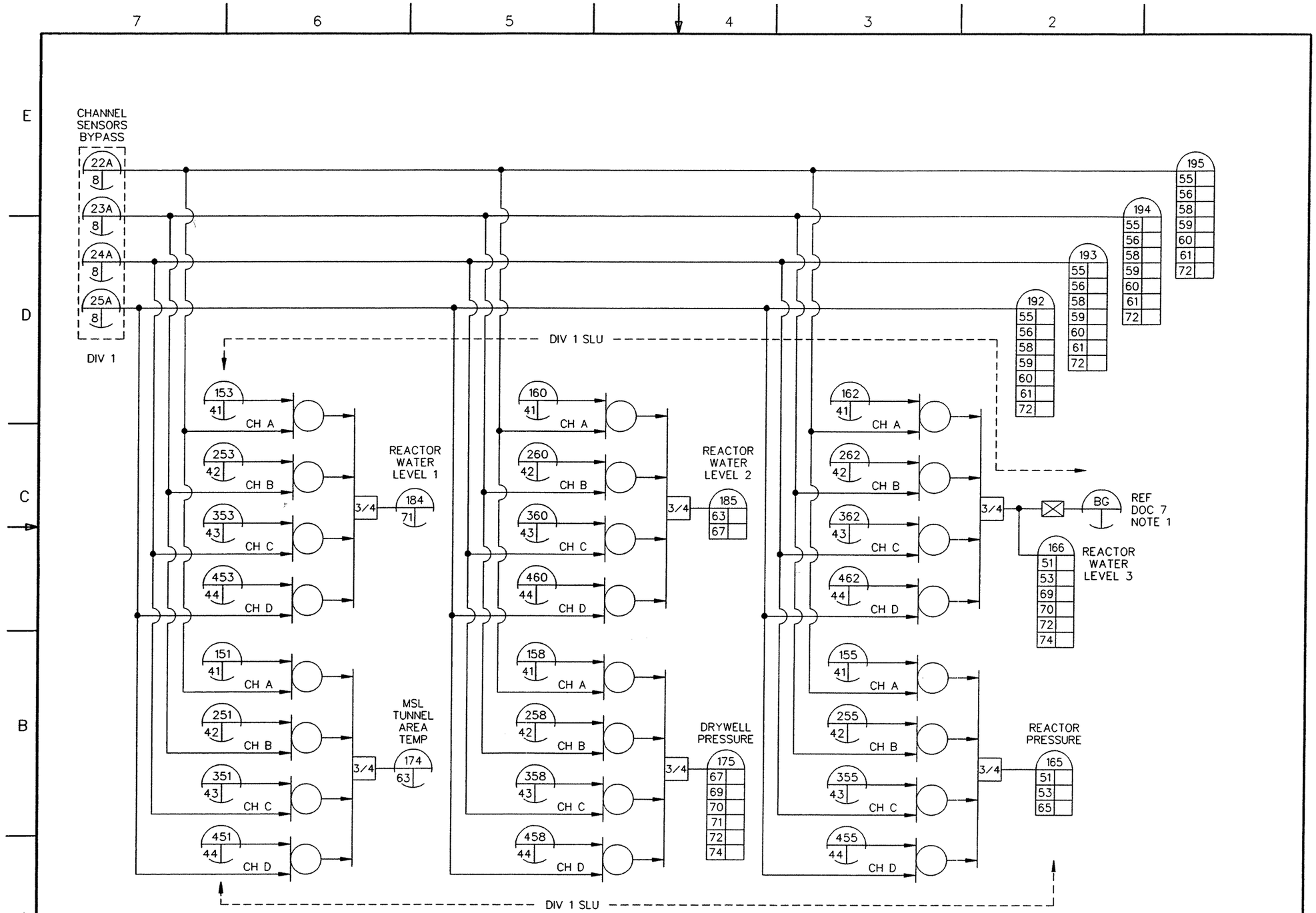

NOTE:

1. THIS SIGNAL INITIATES CLOSURE OF RHR LIQUID WASTE FLUSH VALVES F029A & F030A IN LOOP A.

LDS VOTING & BYPASS LOGIC – DIV 1

FIGURE 7.3–5 LEAK DETECTION AND ISOLATION SYSTEM IBD (Sheet 45 of 77)

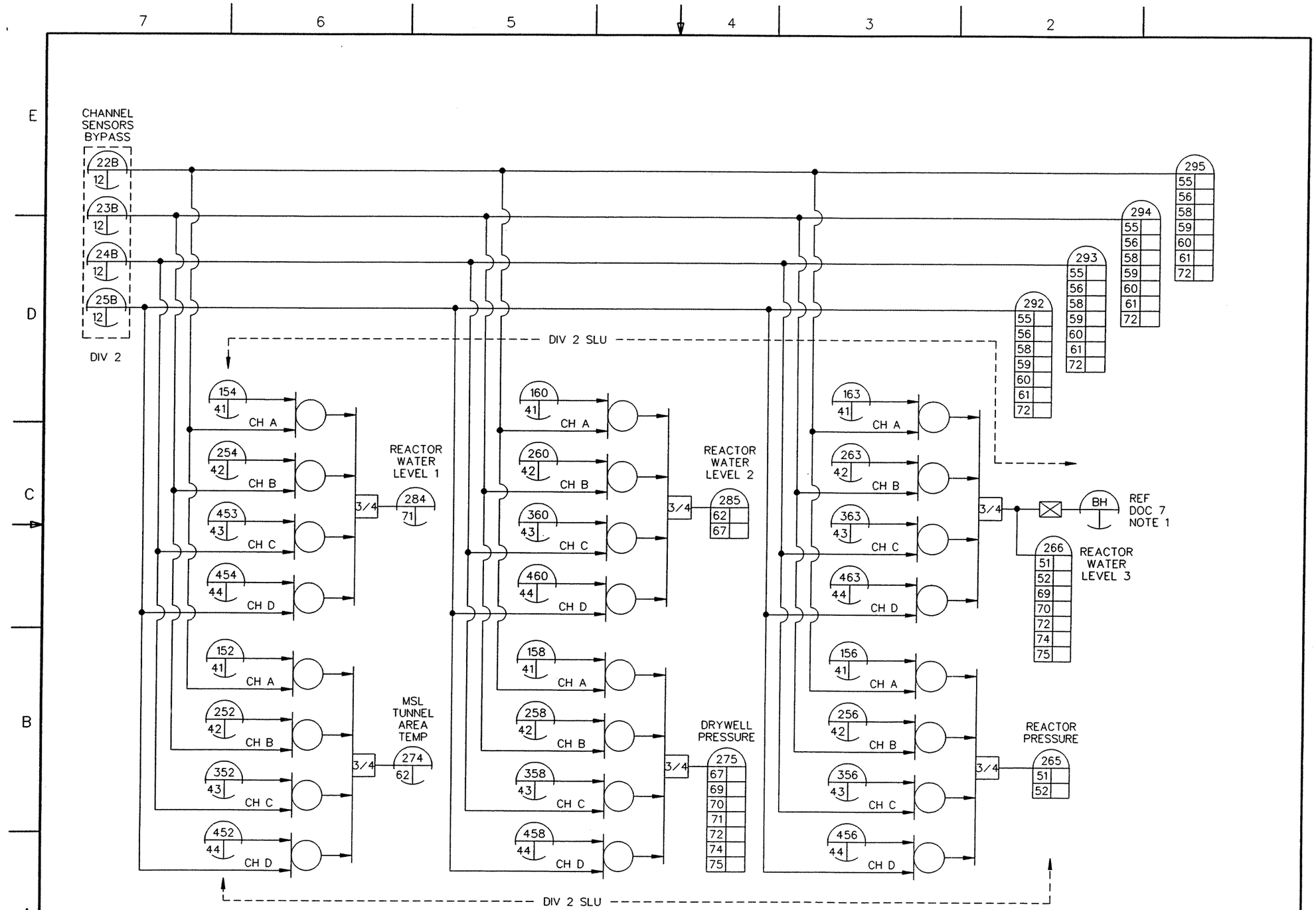

NOTE:

1. THIS SIGNAL INITIATES CLOSURE OF RHR LIQUID WASTE FLUSH VALVES F029B & F030B IN LOOP B.

LDS VOTING & BYPASS LOGIC – DIV 2

FIGURE 7.3-5 LEAK DETECTION AND ISOLATION SYSTEM IBD (Sheet 46 of 77)

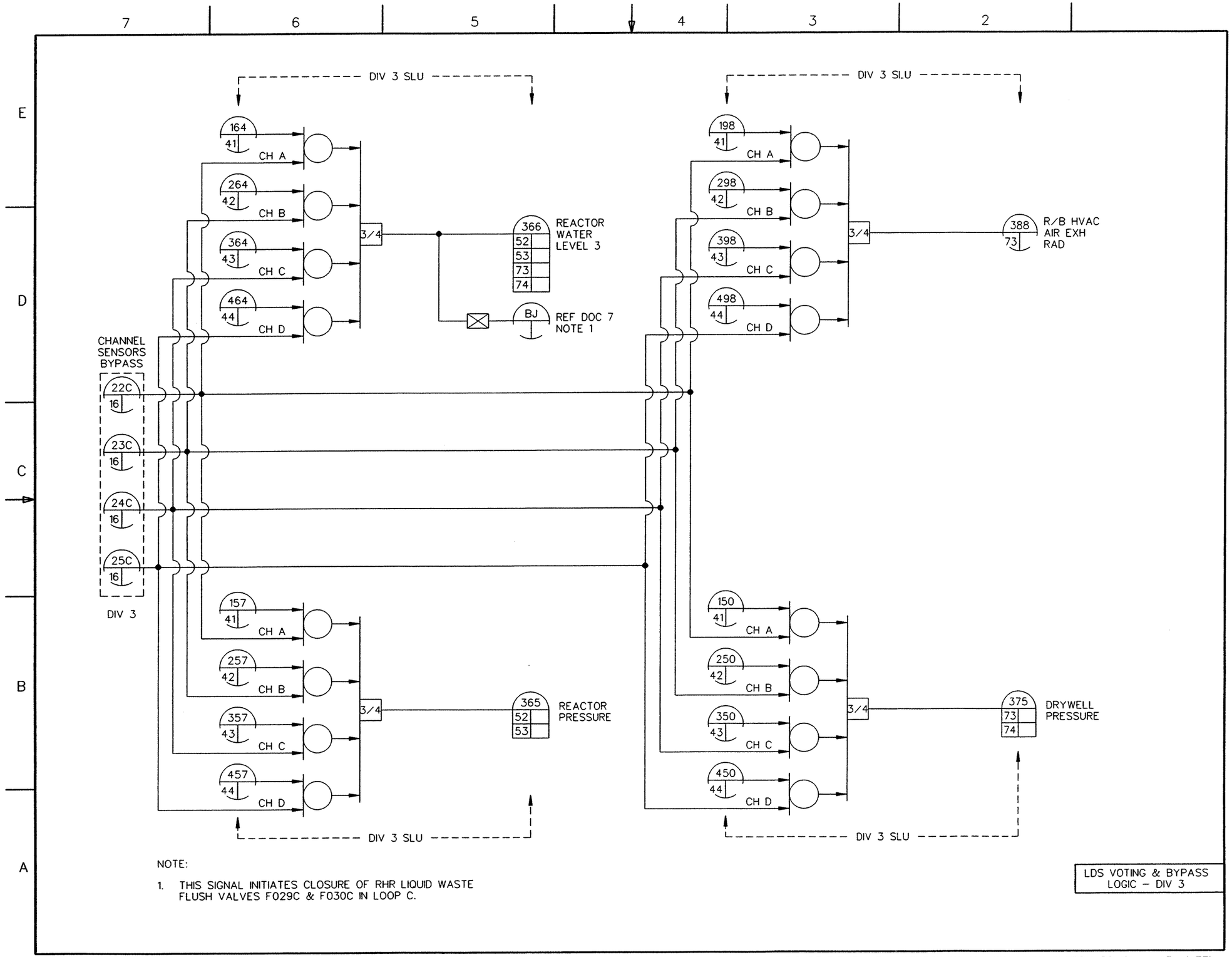

NOTE:

1. THIS SIGNAL INITIATES CLOSURE OF RHR LIQUID WASTE FLUSH VALVES F029C & F030C IN LOOP C.

FIGURE 7.3–5 LEAK DETECTION AND ISOLATION SYSTEM IBD (Sheet 47 of 77)

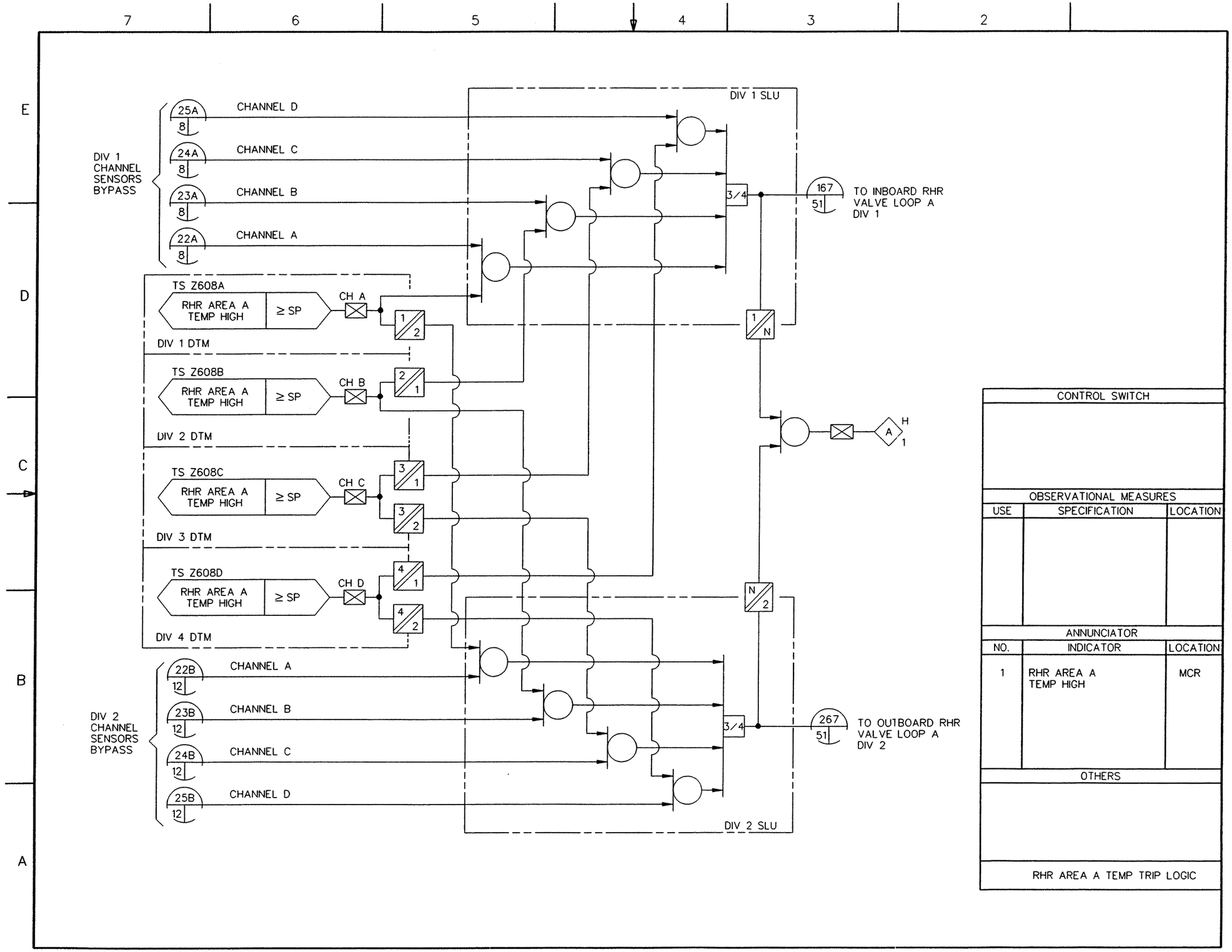

FIGURE 7.3-5 LEAK DETECTION AND ISOLATION SYSTEM IBD (Sheet 48 of 77)

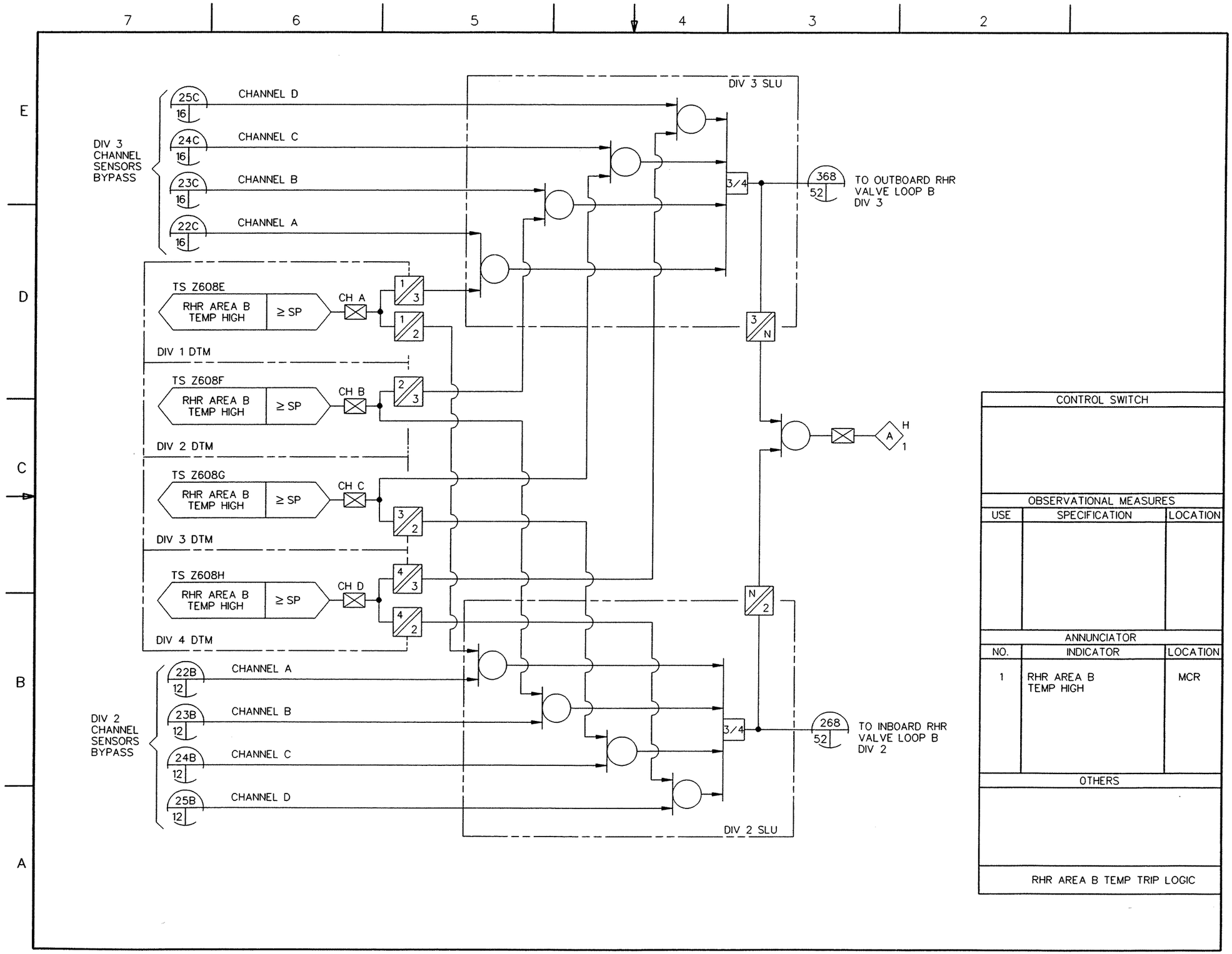

FIGURE 7.3-5 LEAK DETECTION AND ISOLATION SYSTEM IBD (Sheet 49 of 77)

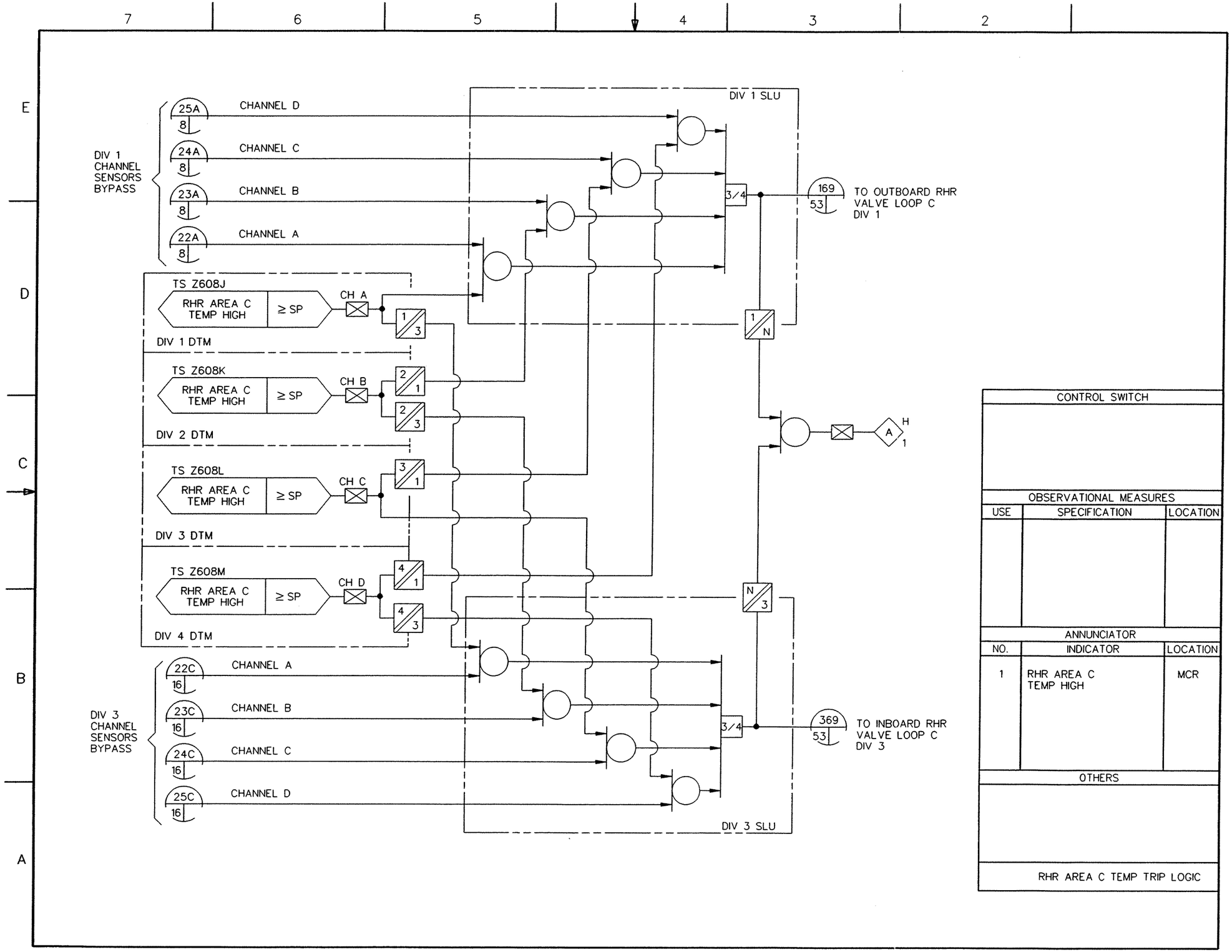

FIGURE 7.3-5 LEAK DETECTION AND ISOLATION SYSTEM IBD (Sheet 50 of 77)

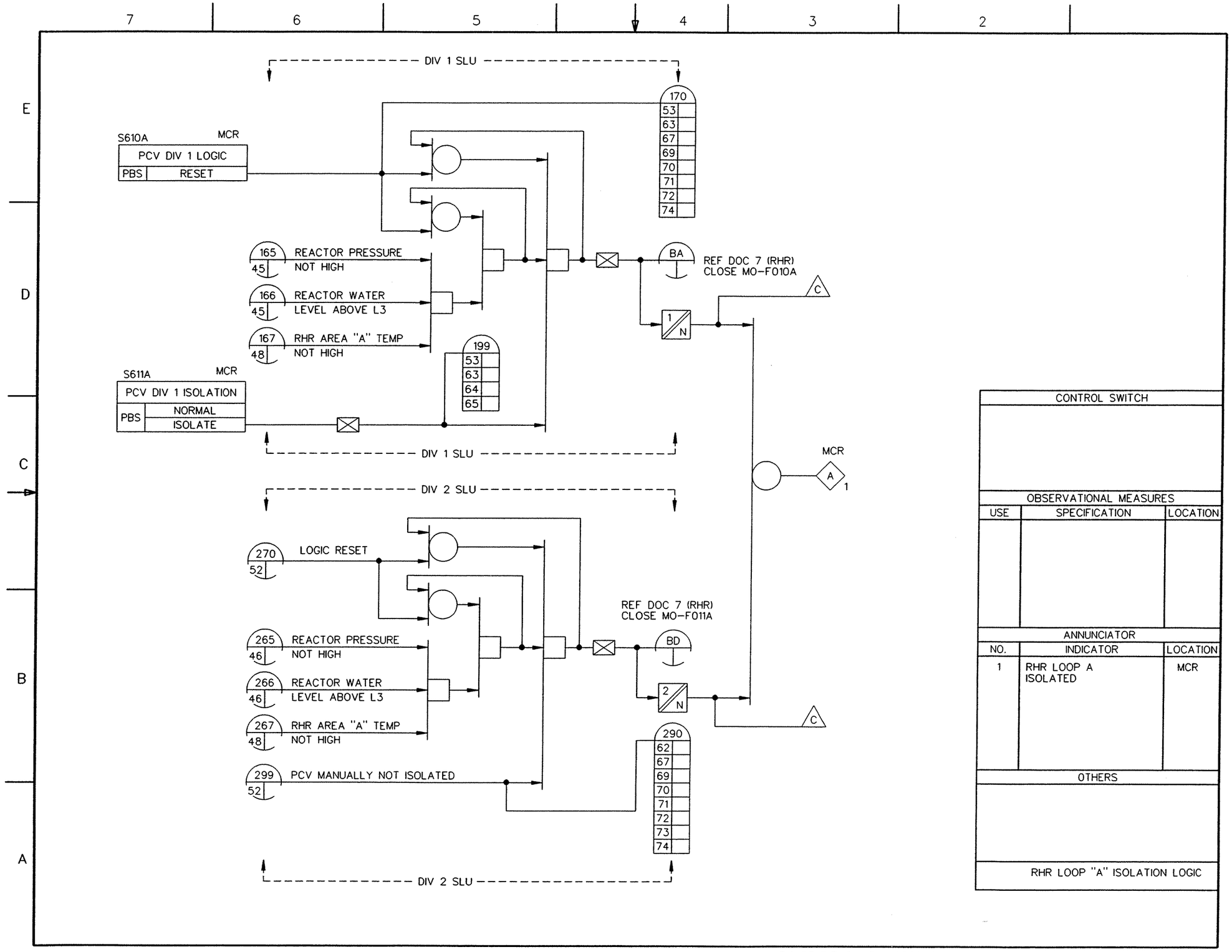

FIGURE 7.3-5 LEAK DETECTION AND ISOLATION SYSTEM IBD (Sheet 51 of 77)

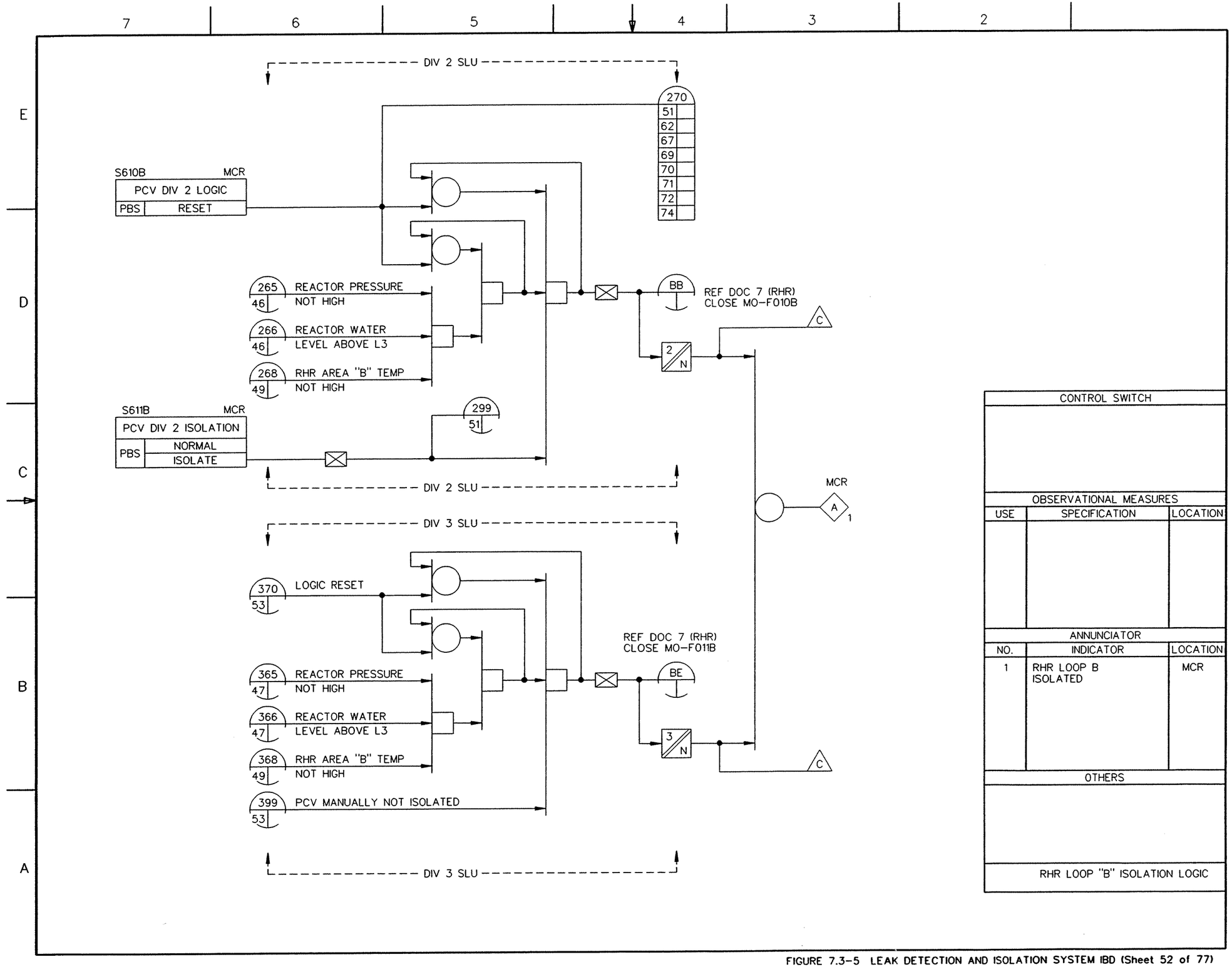

FIGURE 7.3-5 LEAK DETECTION AND ISOLATION SYSTEM IBD (Sheet 52 of 77)

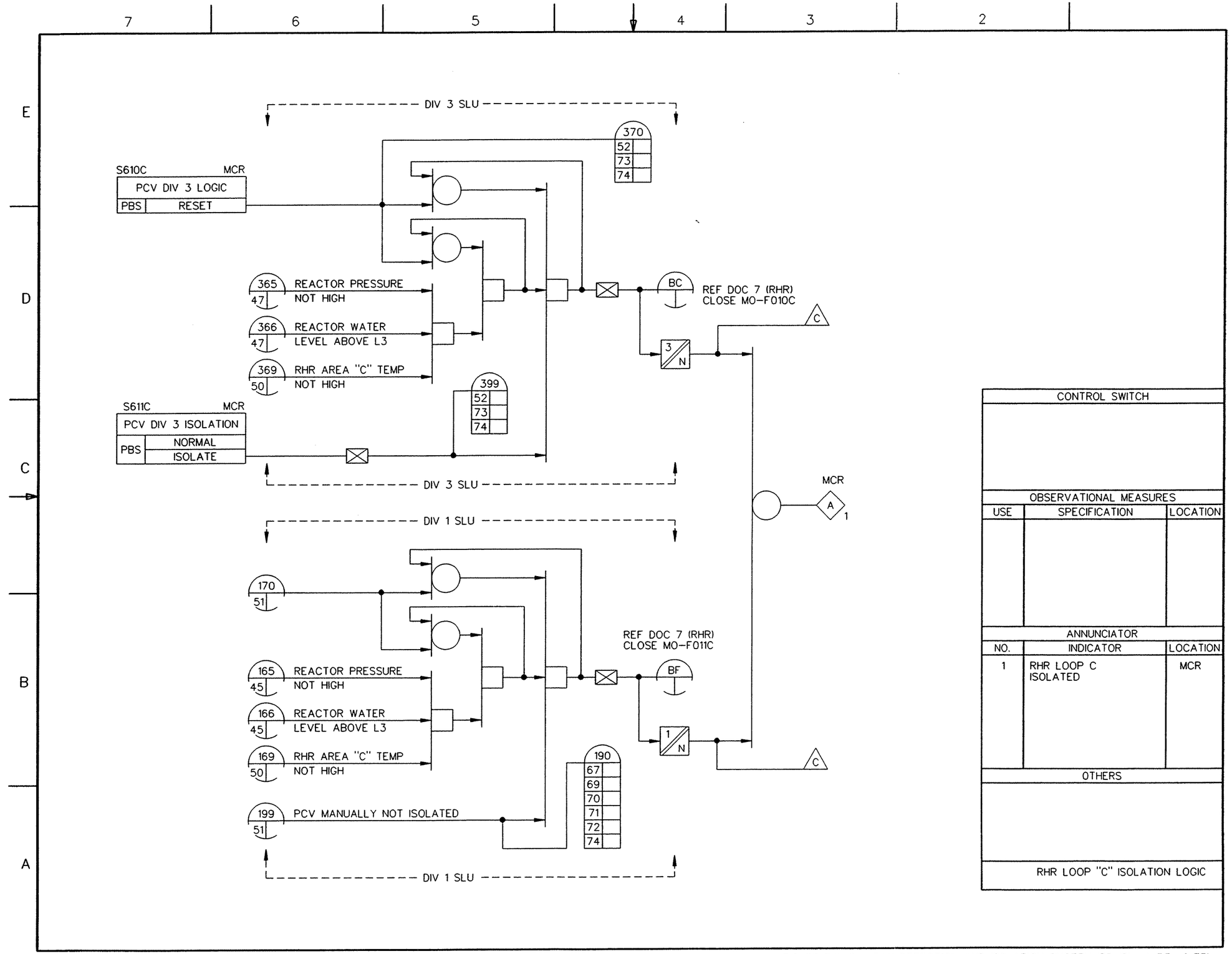

FIGURE 7.3-5 LEAK DETECTION AND ISOLATION SYSTEM IBD (Sheet 53 of 77)

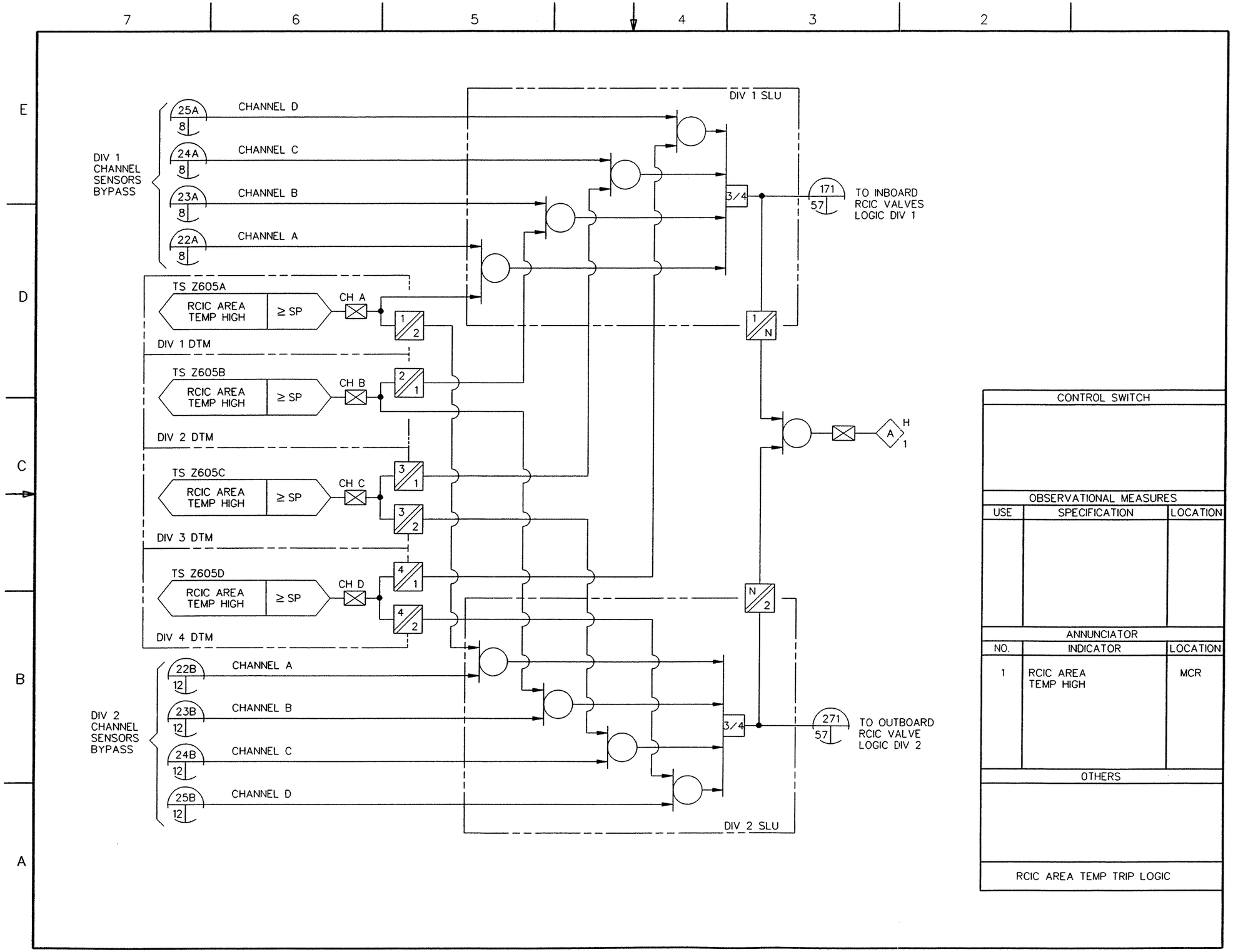

FIGURE 7.3-5 LEAK DETECTION AND ISOLATION SYSTEM IBD (Sheet 54 of 77)

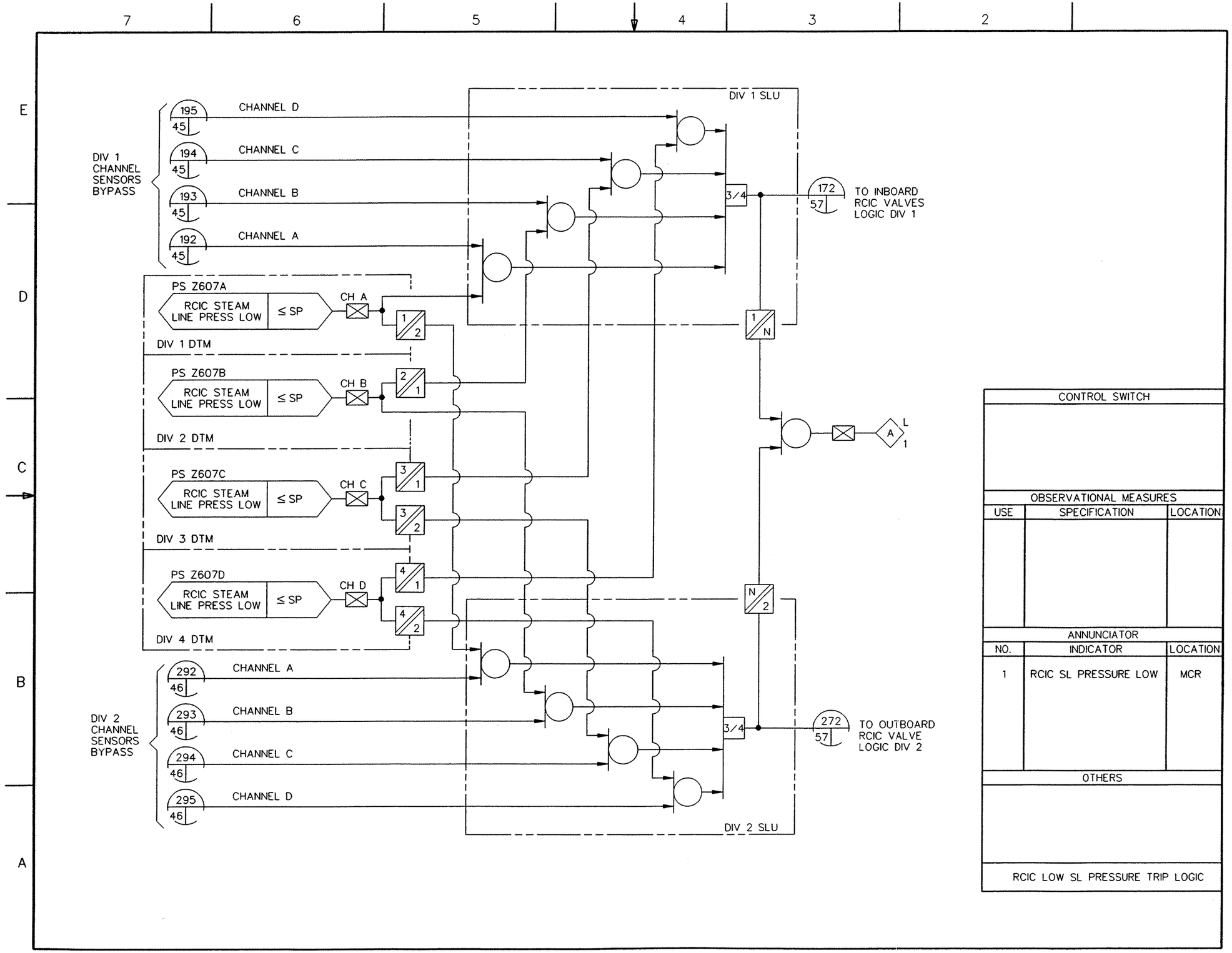

FIGURE 7.3-5 LEAK DETECTION AND ISOLATION SYSTEM IBD (Sheet 55 of 77)

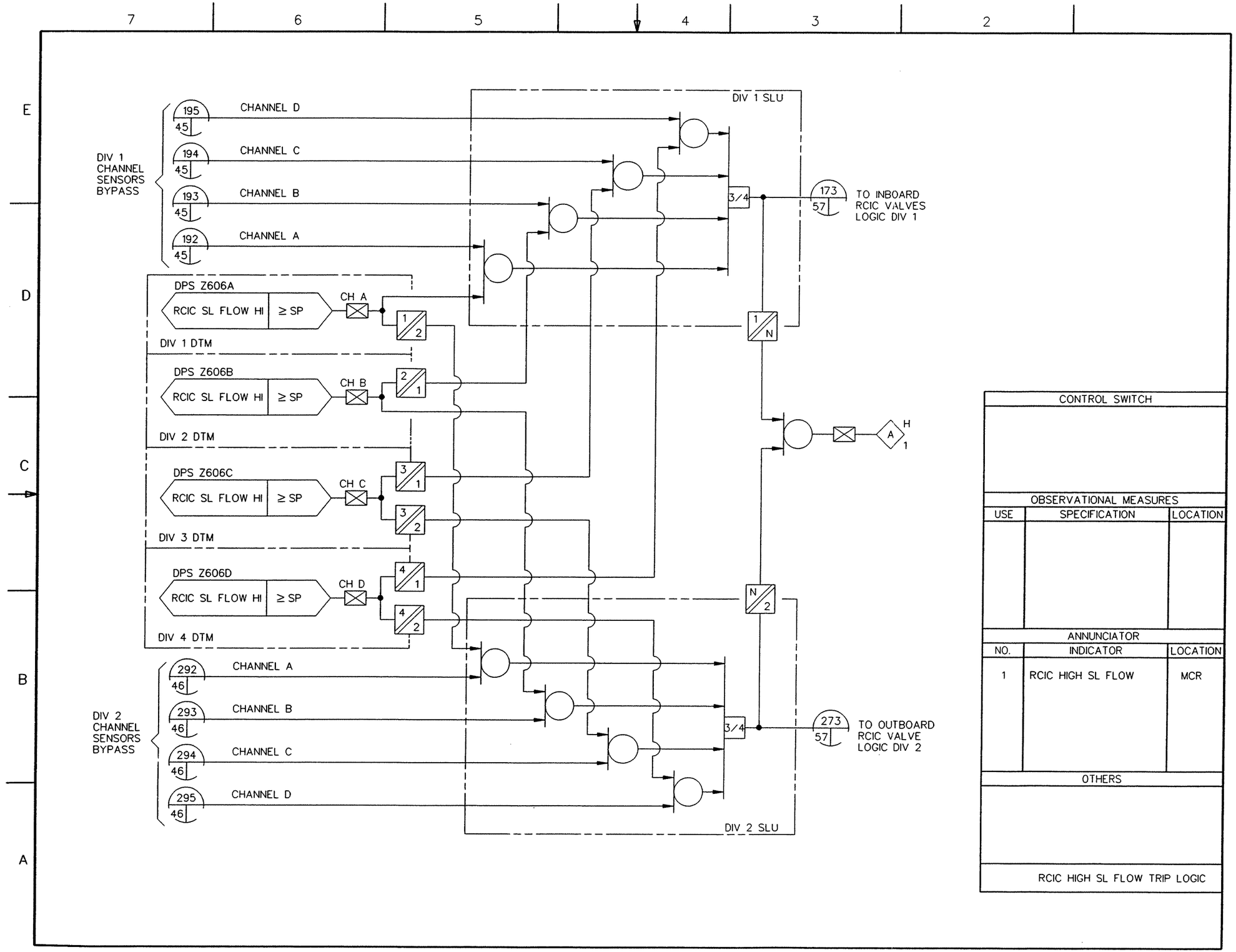

FIGURE 7.3–5 LEAK DETECTION AND ISOLATION SYSTEM IBD (Sheet 56 of 77)

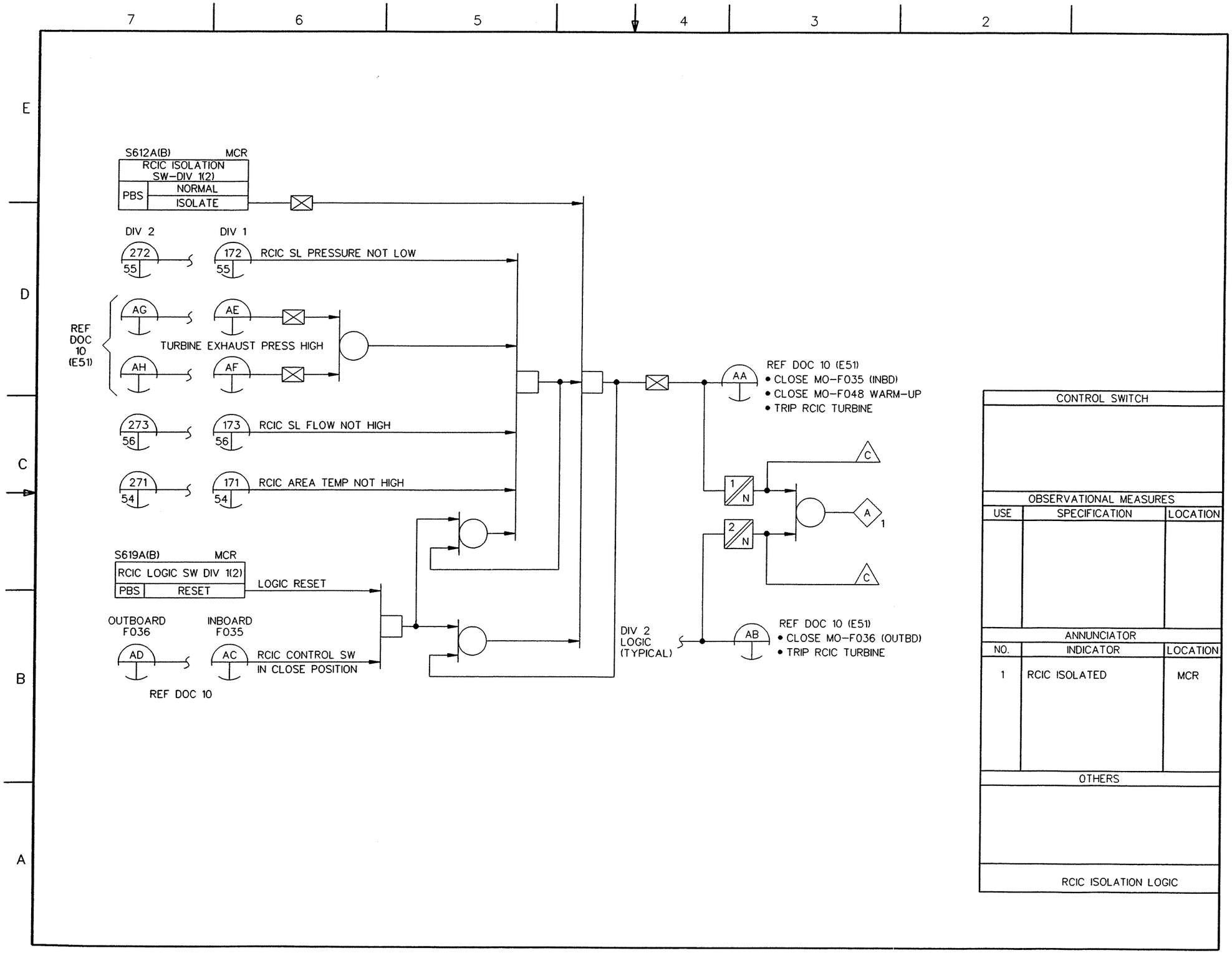

FIGURE 7.3–5 LEAK DETECTION AND ISOLATION SYSTEM IBD (Sheet 57 of 77)

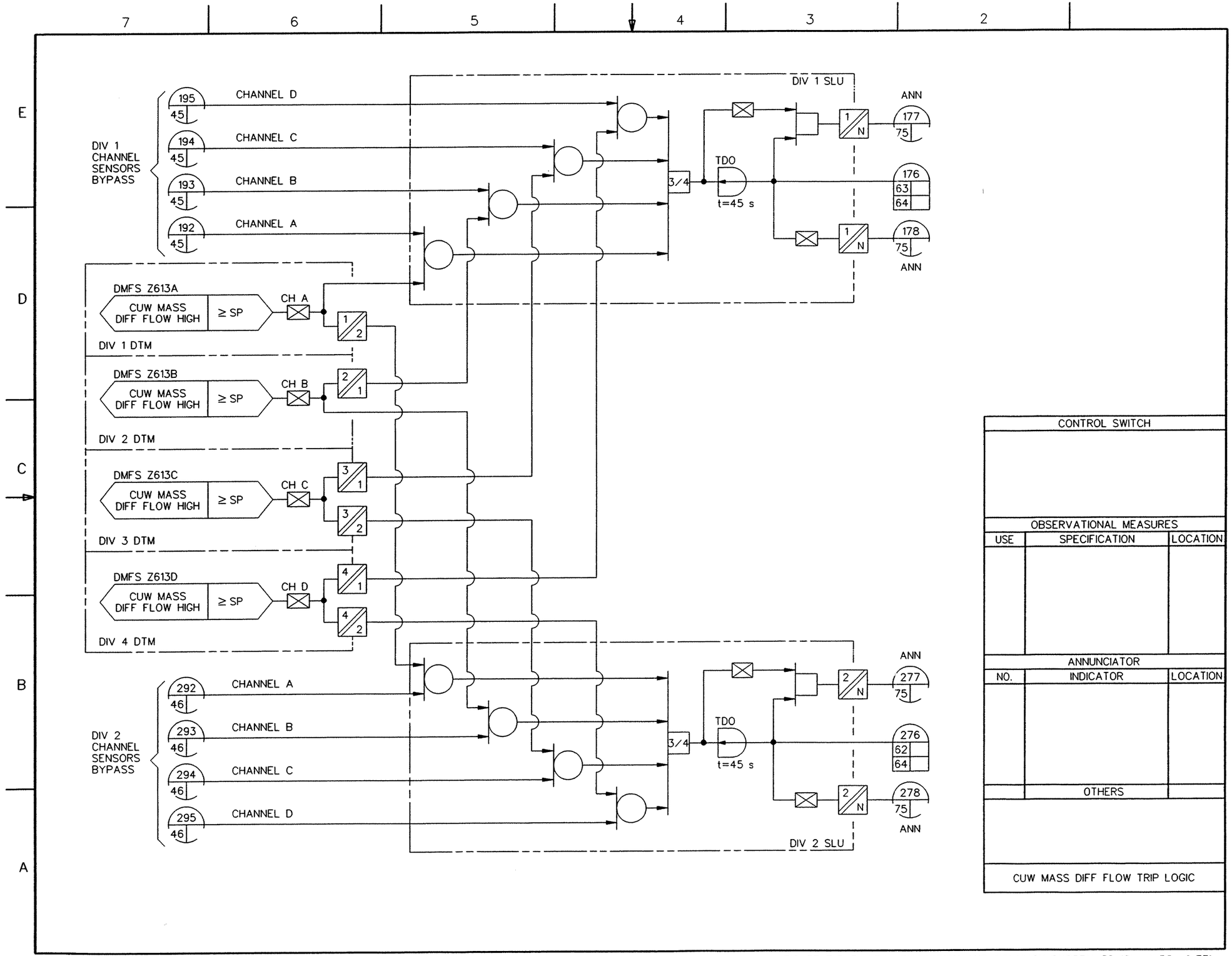

FIGURE 7.3-5 LEAK DETECTION AND ISOLATION SYSTEM IBD (Sheet 58 of 77)

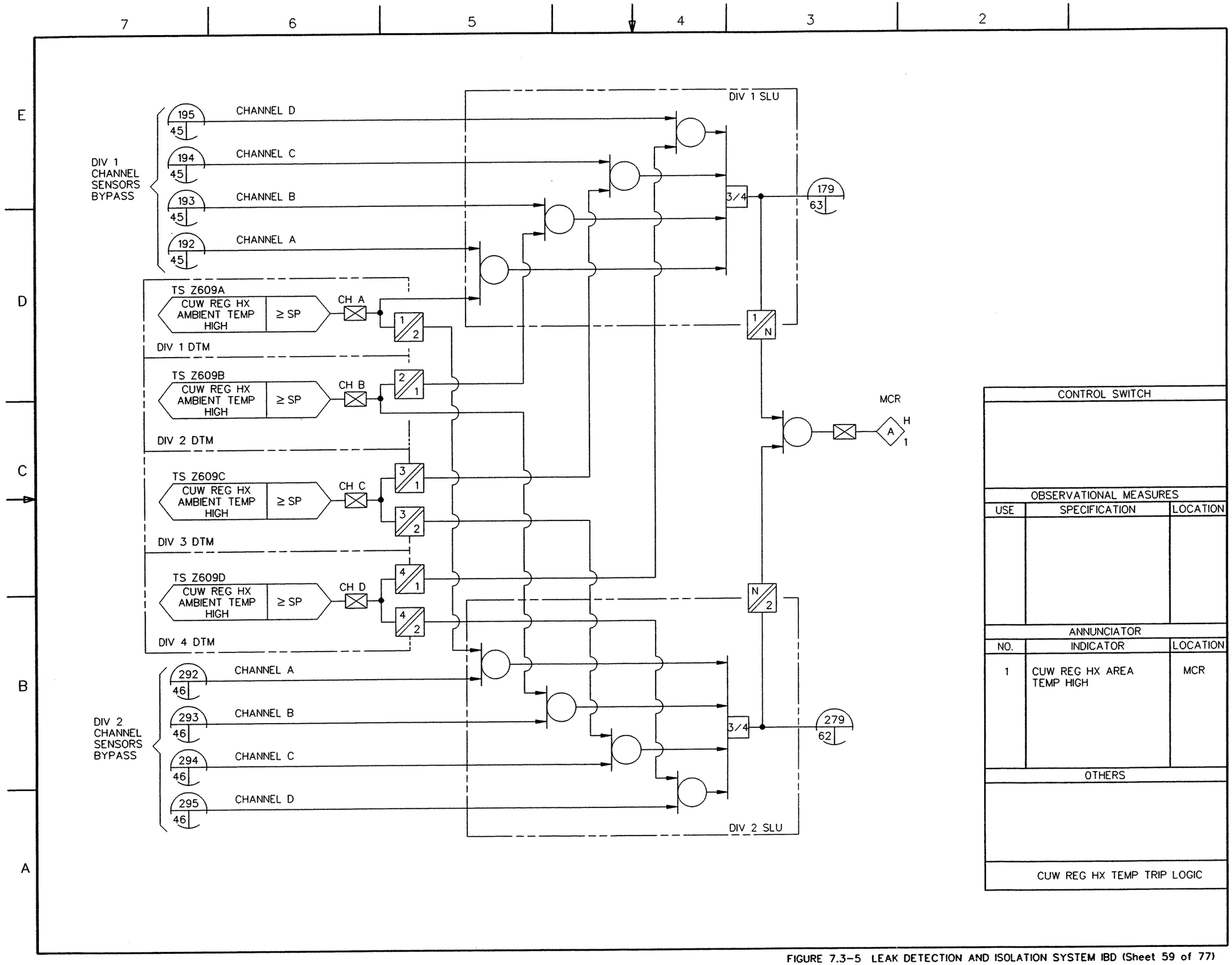

FIGURE 7.3-5 LEAK DETECTION AND ISOLATION SYSTEM IBD (Sheet 59 of 77)

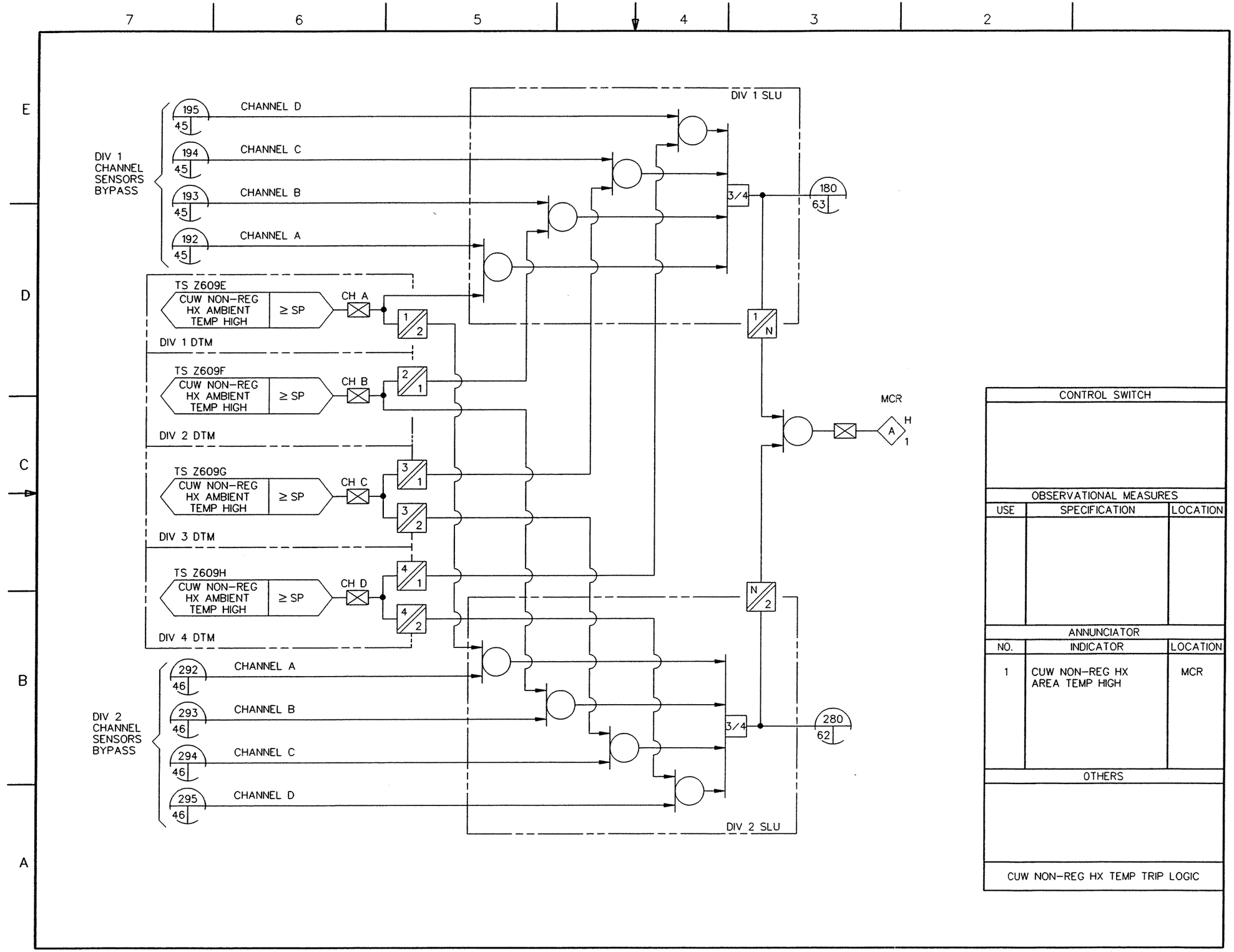

FIGURE 7.3-5 LEAK DETECTION AND ISOLATION SYSTEM IBD (Sheet 60 of 77)

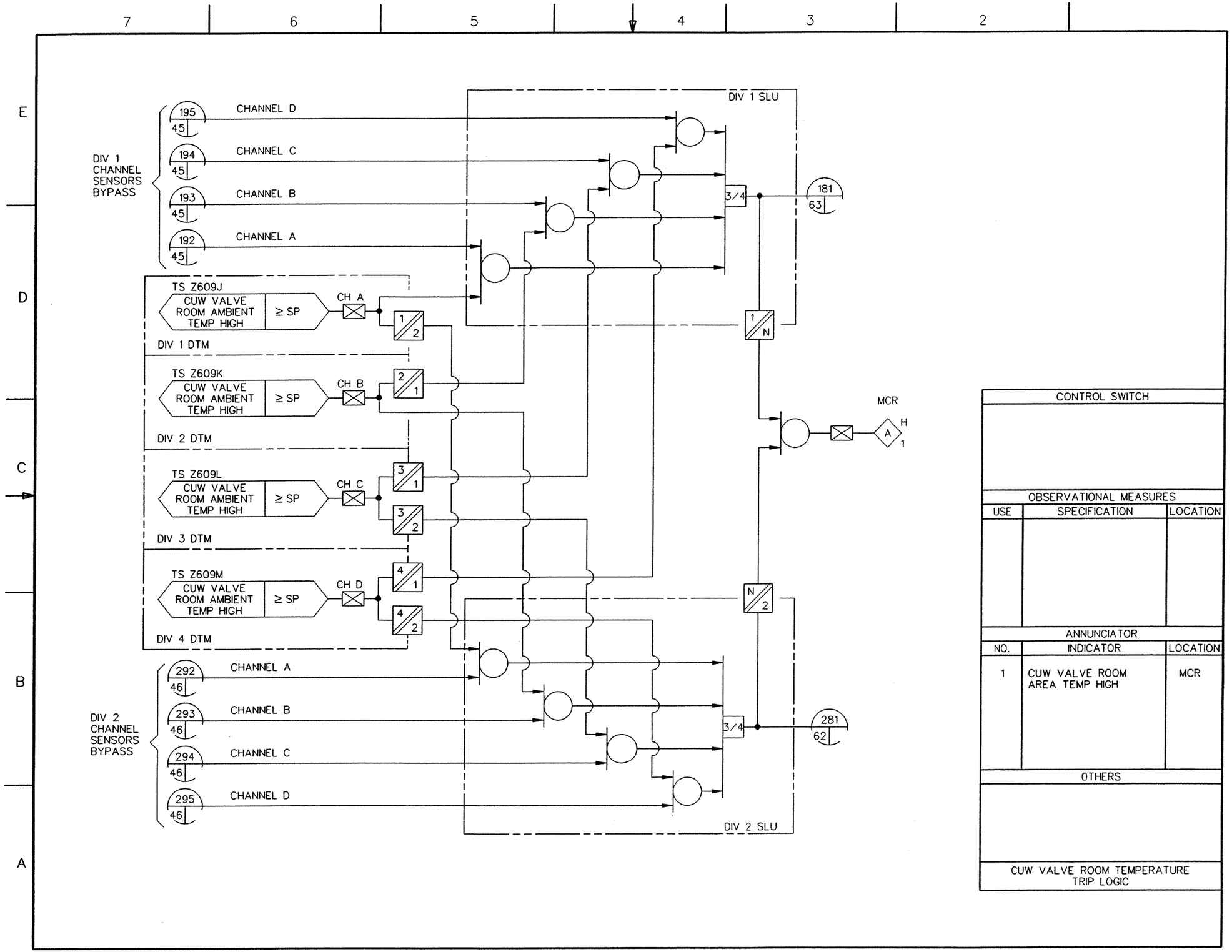

FIGURE 7.3–5 LEAK DETECTION AND ISOLATION SYSTEM IBD (Sheet 61 of 77)

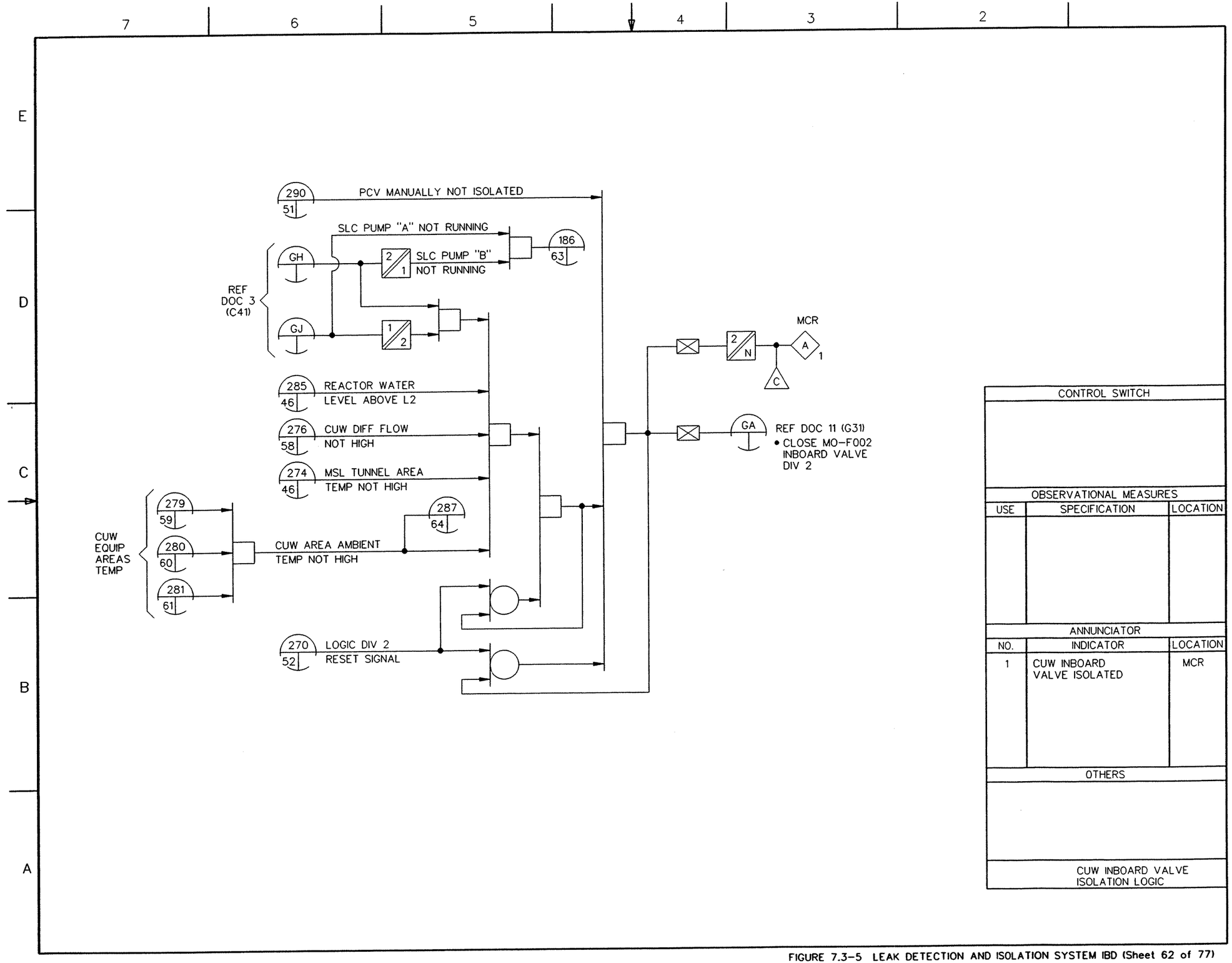

FIGURE 7.3-5 LEAK DETECTION AND ISOLATION SYSTEM IBD (Sheet 62 of 77)

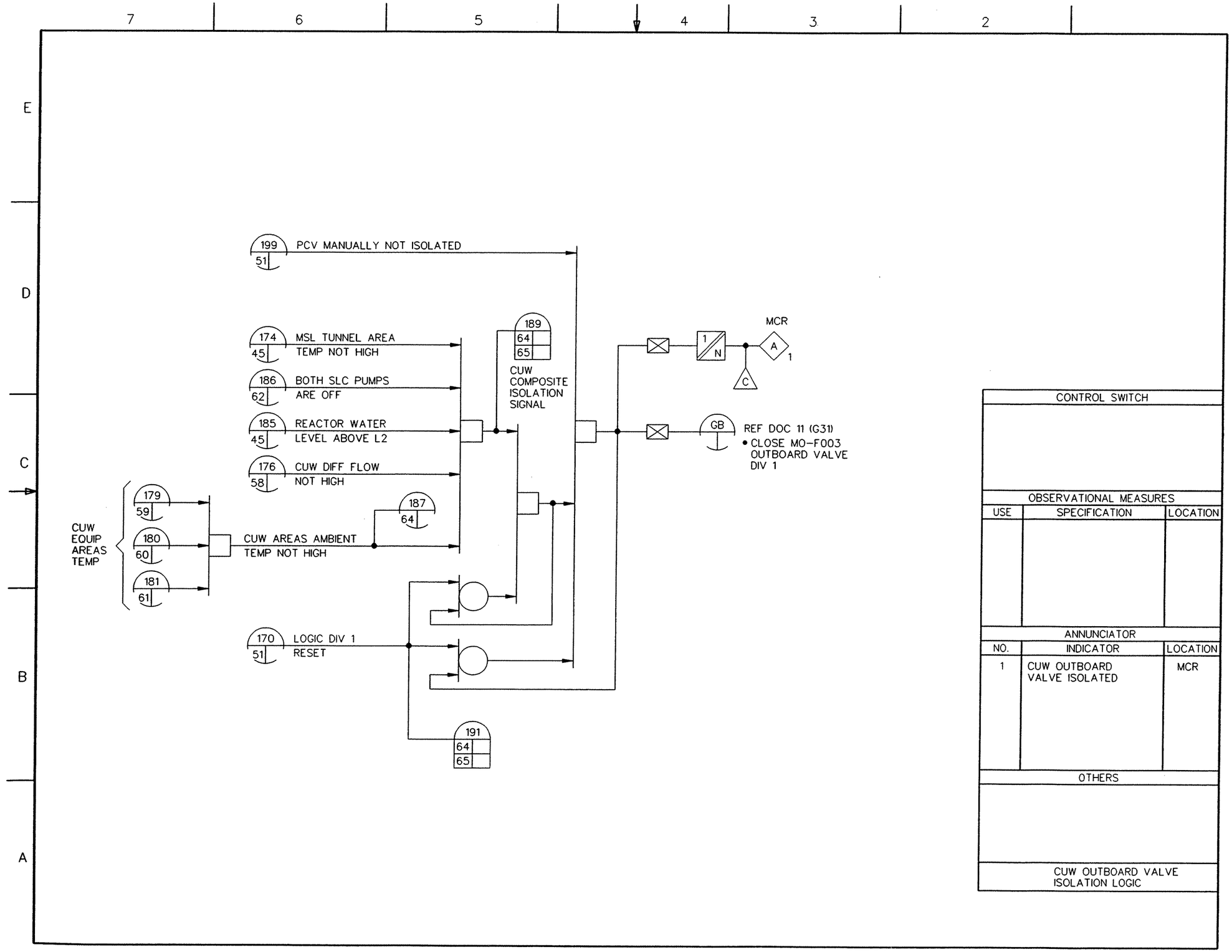

FIGURE 7.3–5 LEAK DETECTION AND ISOLATION SYSTEM IBD (Sheet 63 of 77)

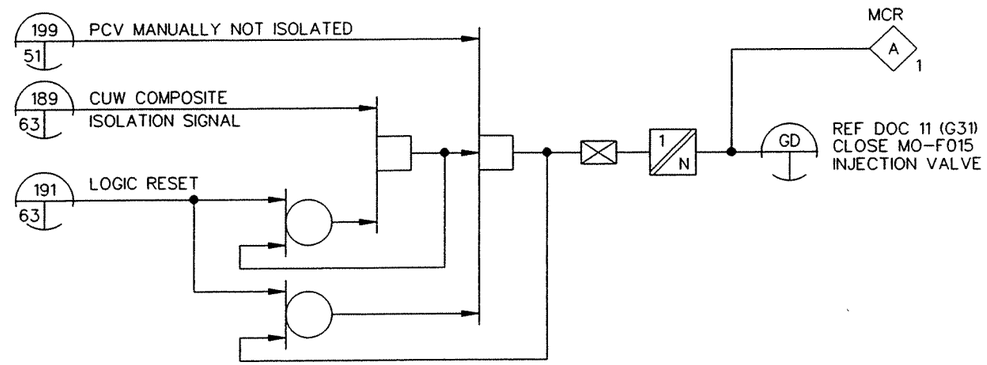

CONTROL SWITCH		
OBSERVATIONAL MEASURES		
USE	SPECIFICATION	LOCATION
ANNUNCIATOR		
NO.	INDICATOR	LOCATION
1	CUW INJECTION VALVE ISOLATED	MCR
OTHERS		
CUW INJECTION & PURGE LINE VALVES ISOLATION LOGIC		

FIGURE 7.3-5 LEAK DETECTION AND ISOLATION SYSTEM IBD (Sheet 64 of 77)

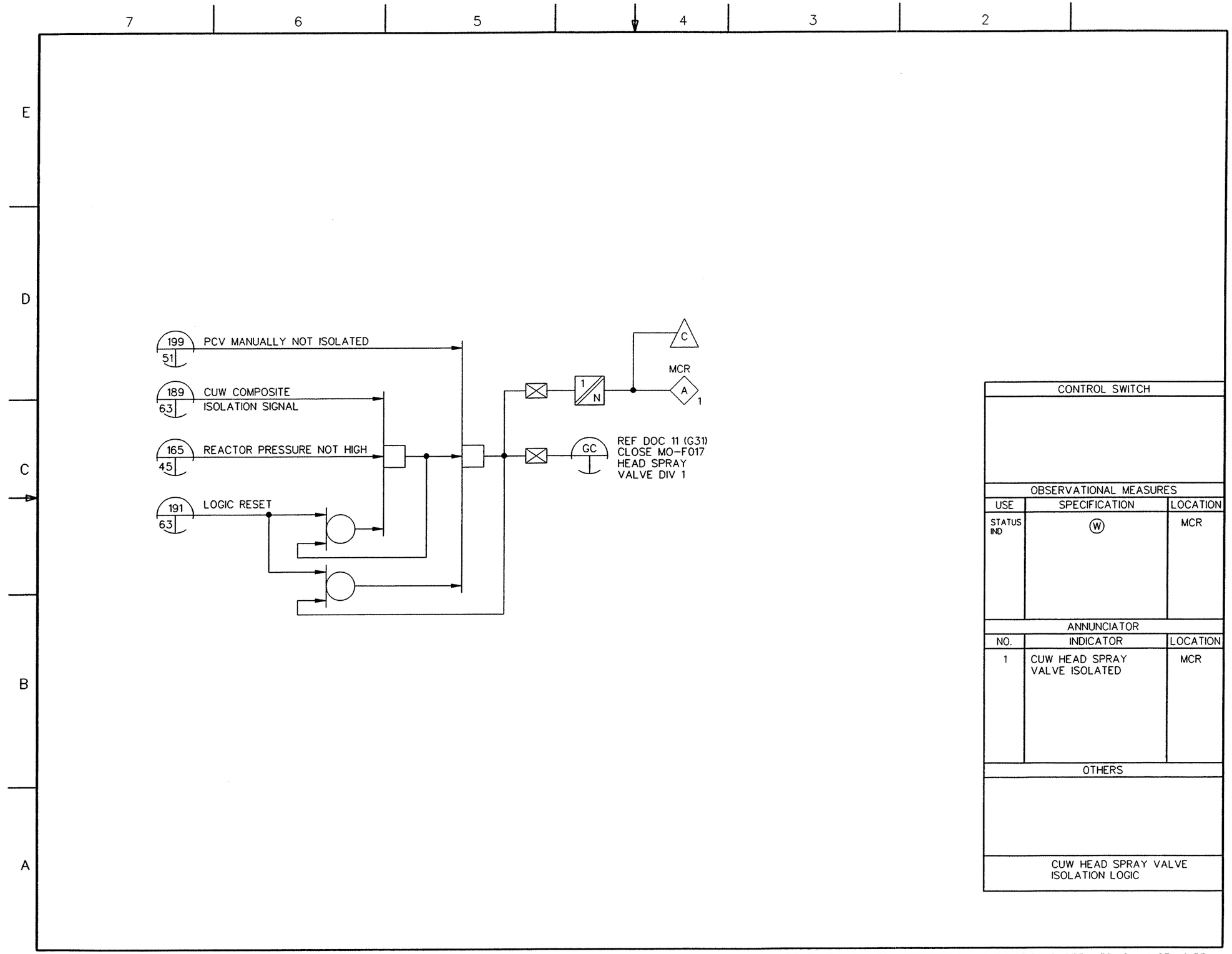

FIGURE 7.3-5 LEAK DETECTION AND ISOLATION SYSTEM IBD (Sheet 65 of 77)

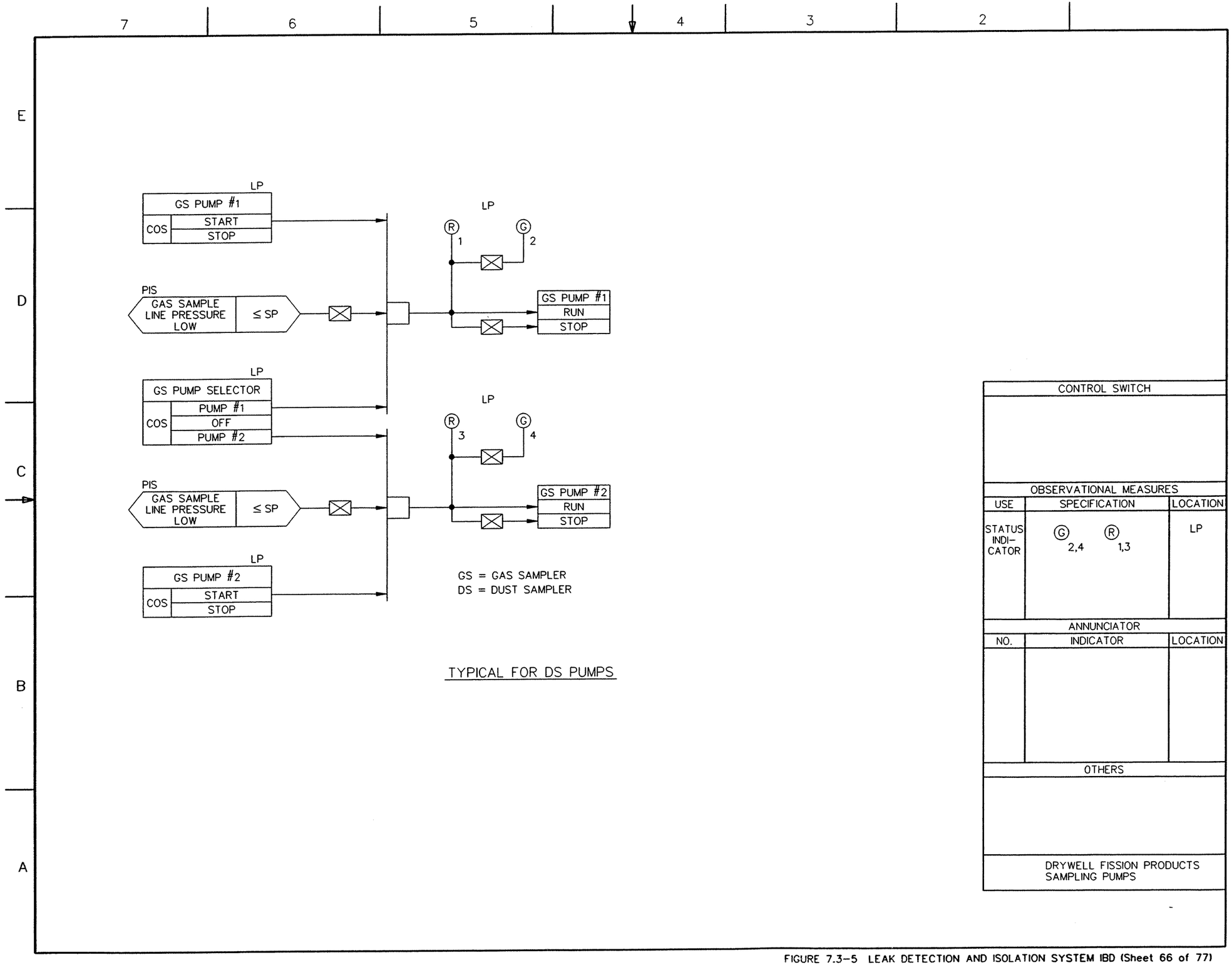

FIGURE 7.3-5 LEAK DETECTION AND ISOLATION SYSTEM IBD (Sheet 66 of 77)

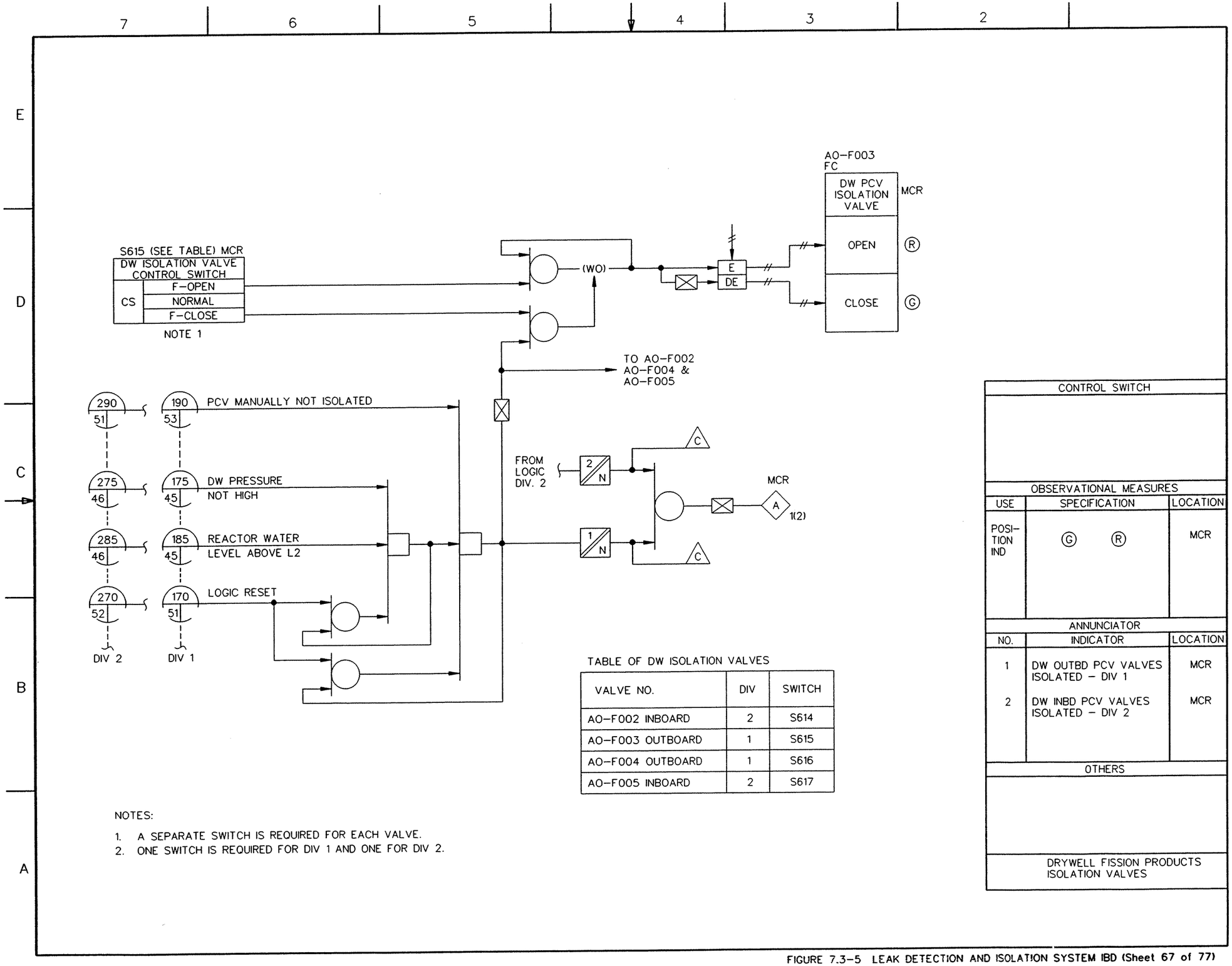

TABLE OF DW ISOLATION VALVES

VALVE NO.	DIV	SWITCH
AO-F002 INBOARD	2	S614
AO-F003 OUTBOARD	1	S615
AO-F004 OUTBOARD	1	S616
AO-F005 INBOARD	2	S617

NOTES:

1. A SEPARATE SWITCH IS REQUIRED FOR EACH VALVE.
2. ONE SWITCH IS REQUIRED FOR DIV 1 AND ONE FOR DIV 2.

FIGURE 7.3-5 LEAK DETECTION AND ISOLATION SYSTEM IBD (Sheet 67 of 77)

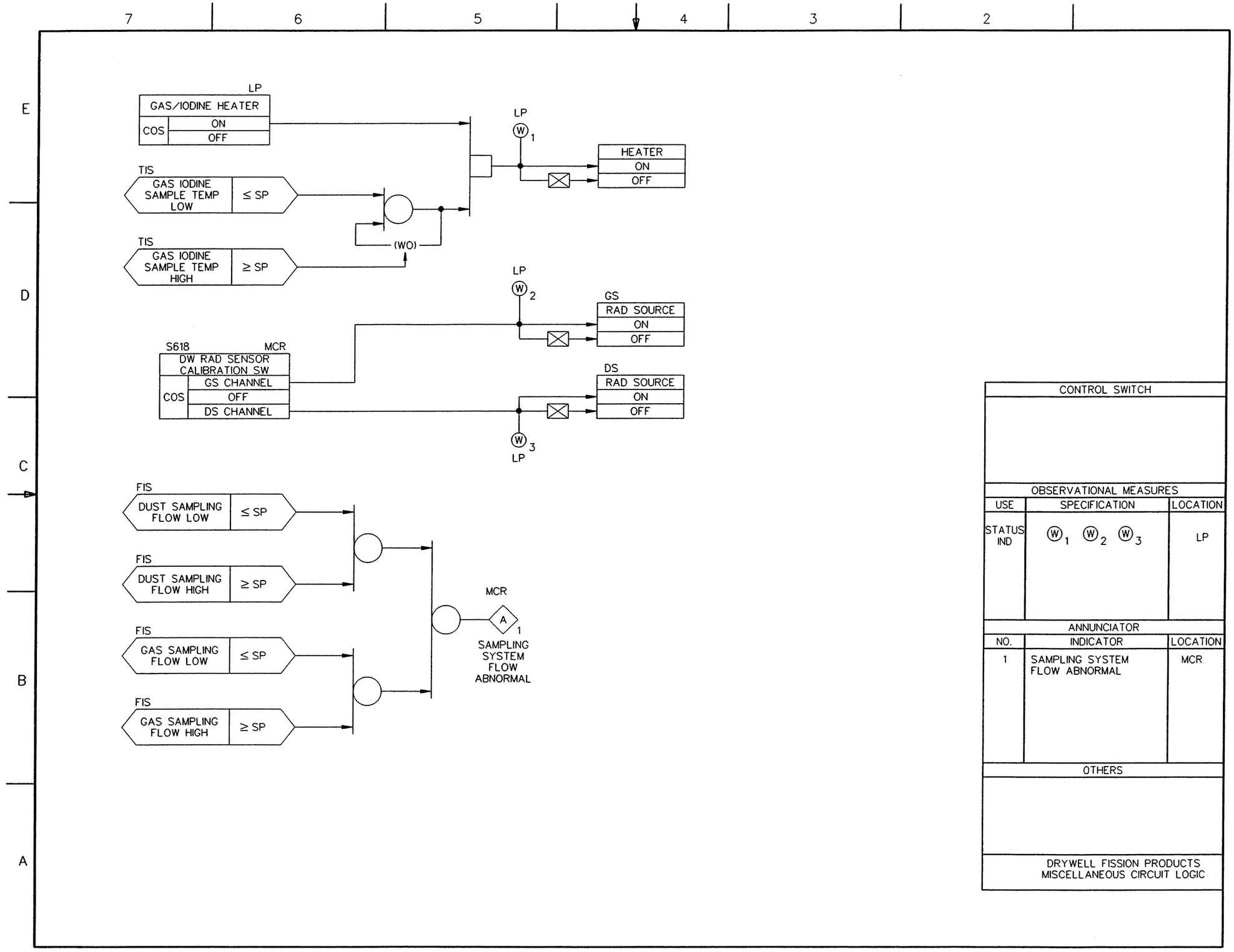

FIGURE 7.3-5 LEAK DETECTION AND ISOLATION SYSTEM IBD (Sheet 68 of 77)

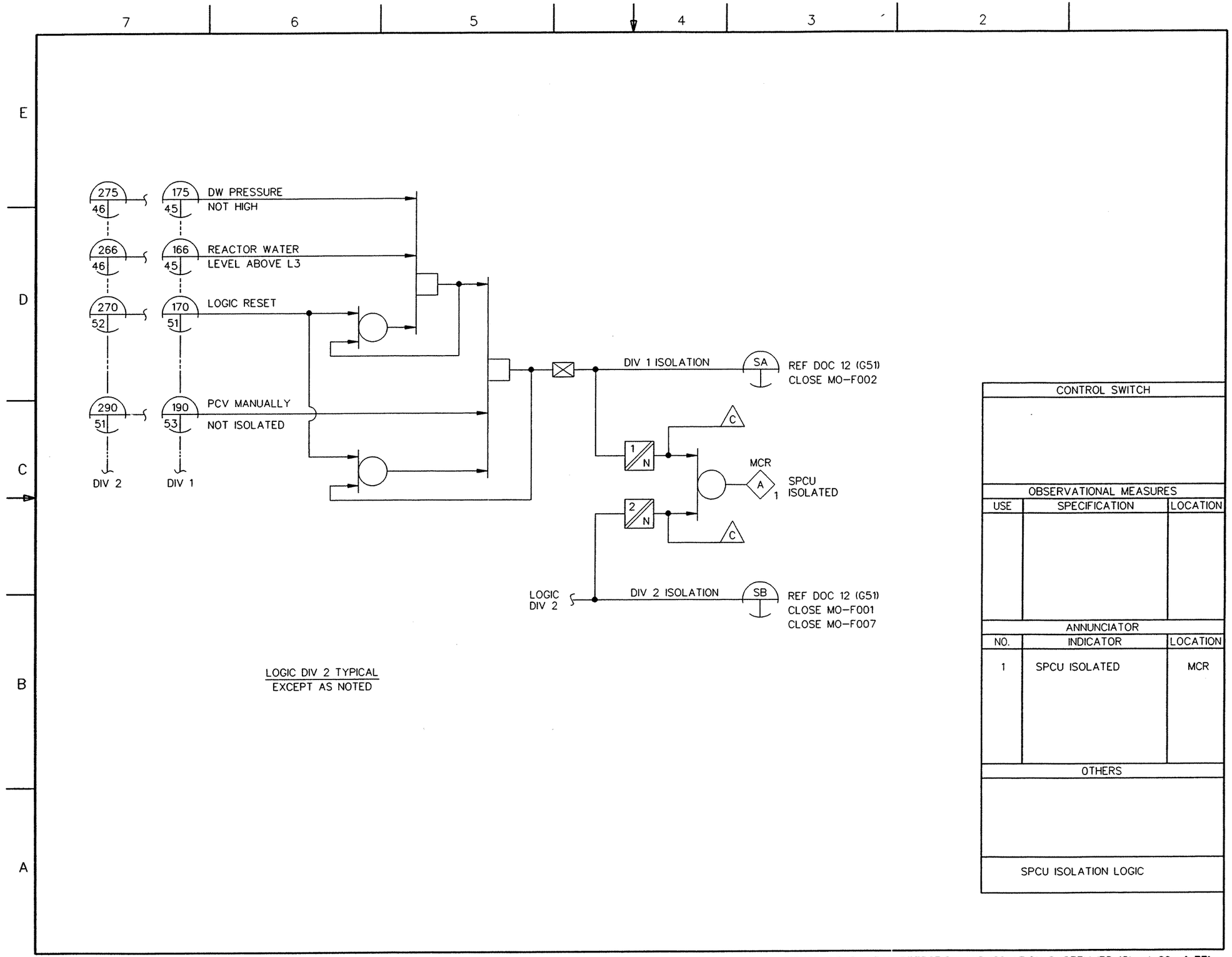

FIGURE 7.3-5 LEAK DETECTION AND ISOLATION SYSTEM IBD (Sheet 69 of 77)

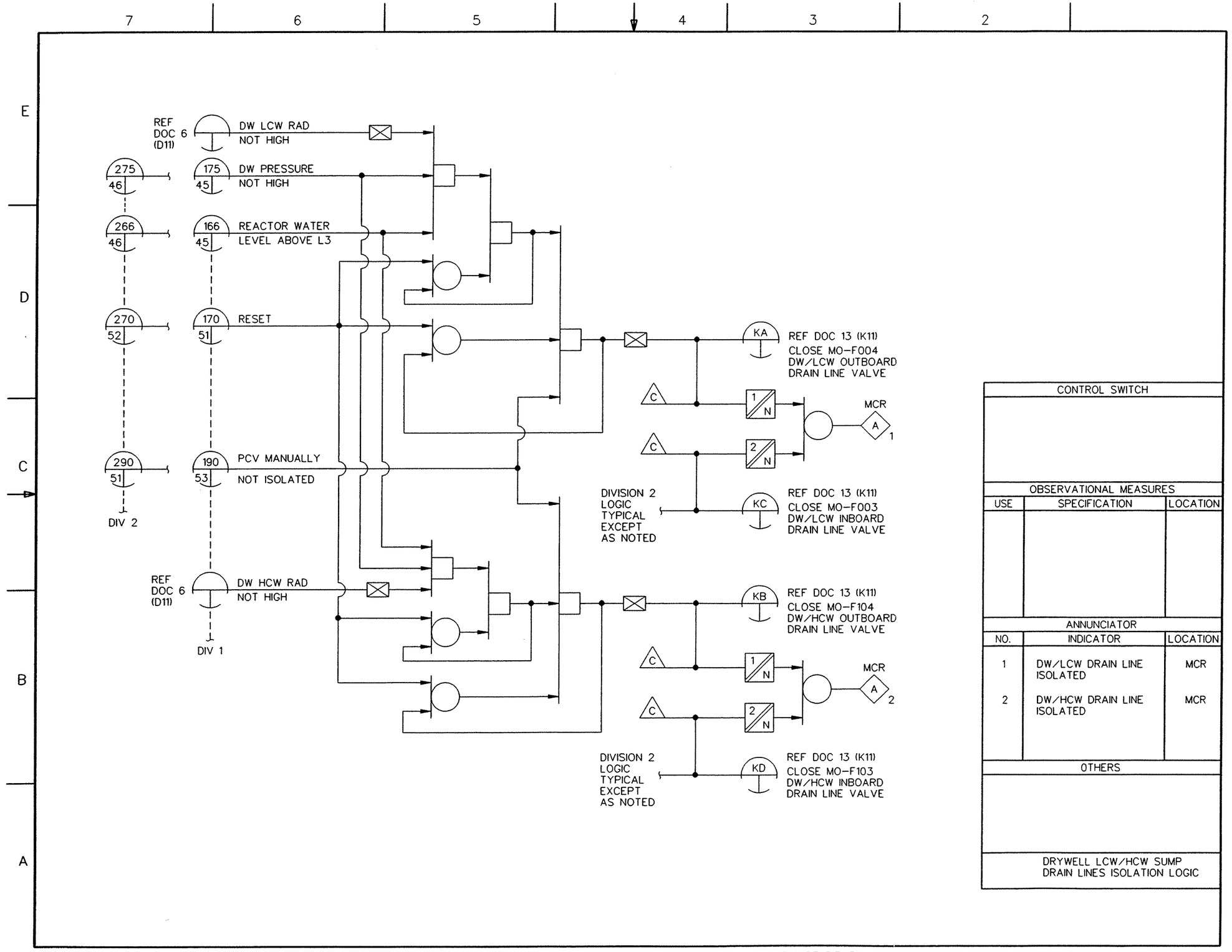

FIGURE 7.3-5 LEAK DETECTION AND ISOLATION SYSTEM IBD (Sheet 70 of 77)

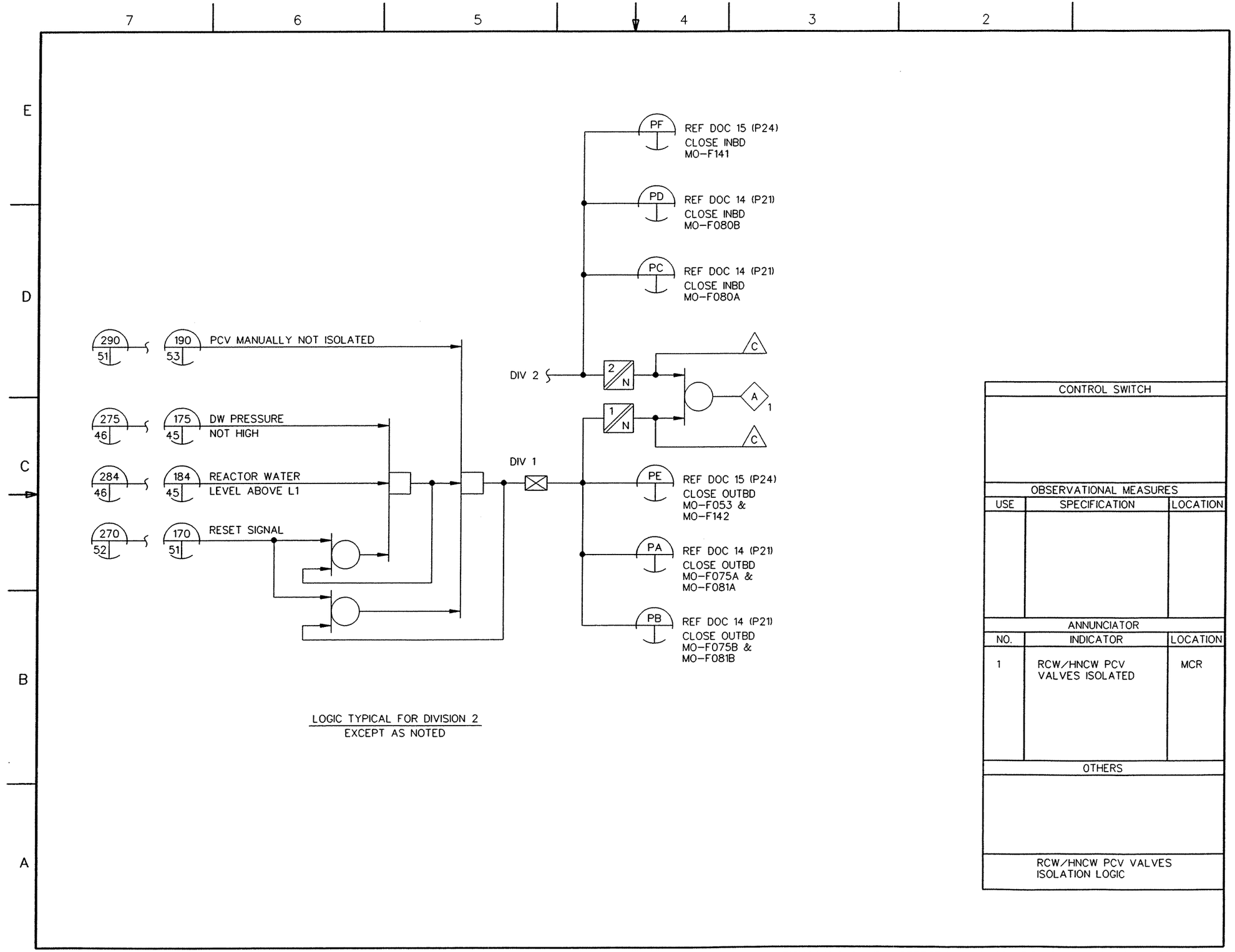

FIGURE 7.3-5 LEAK DETECTION AND ISOLATION SYSTEM IBD (Sheet 71 of 77)

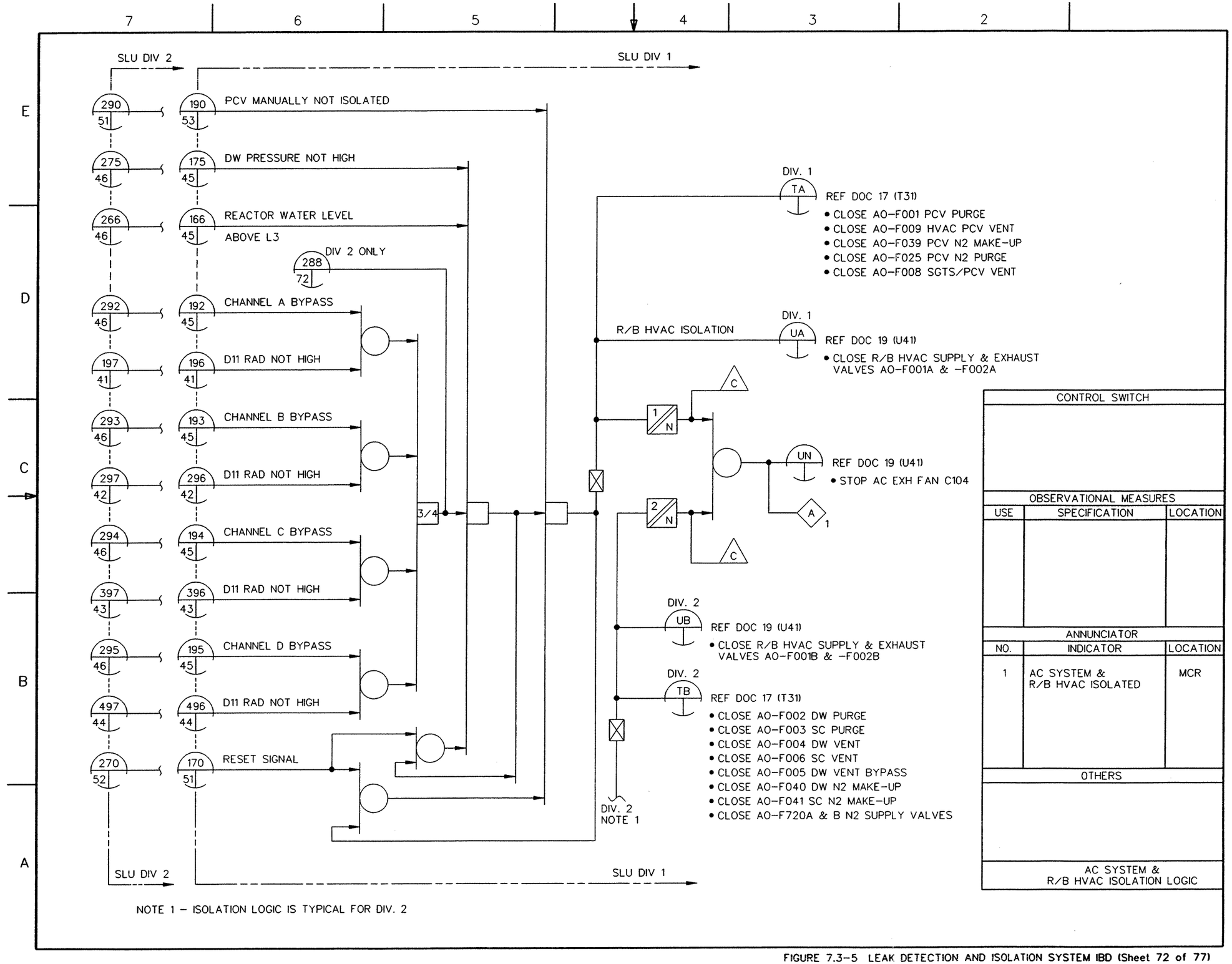

FIGURE 7.3-5 LEAK DETECTION AND ISOLATION SYSTEM IBD (Sheet 72 of 77)

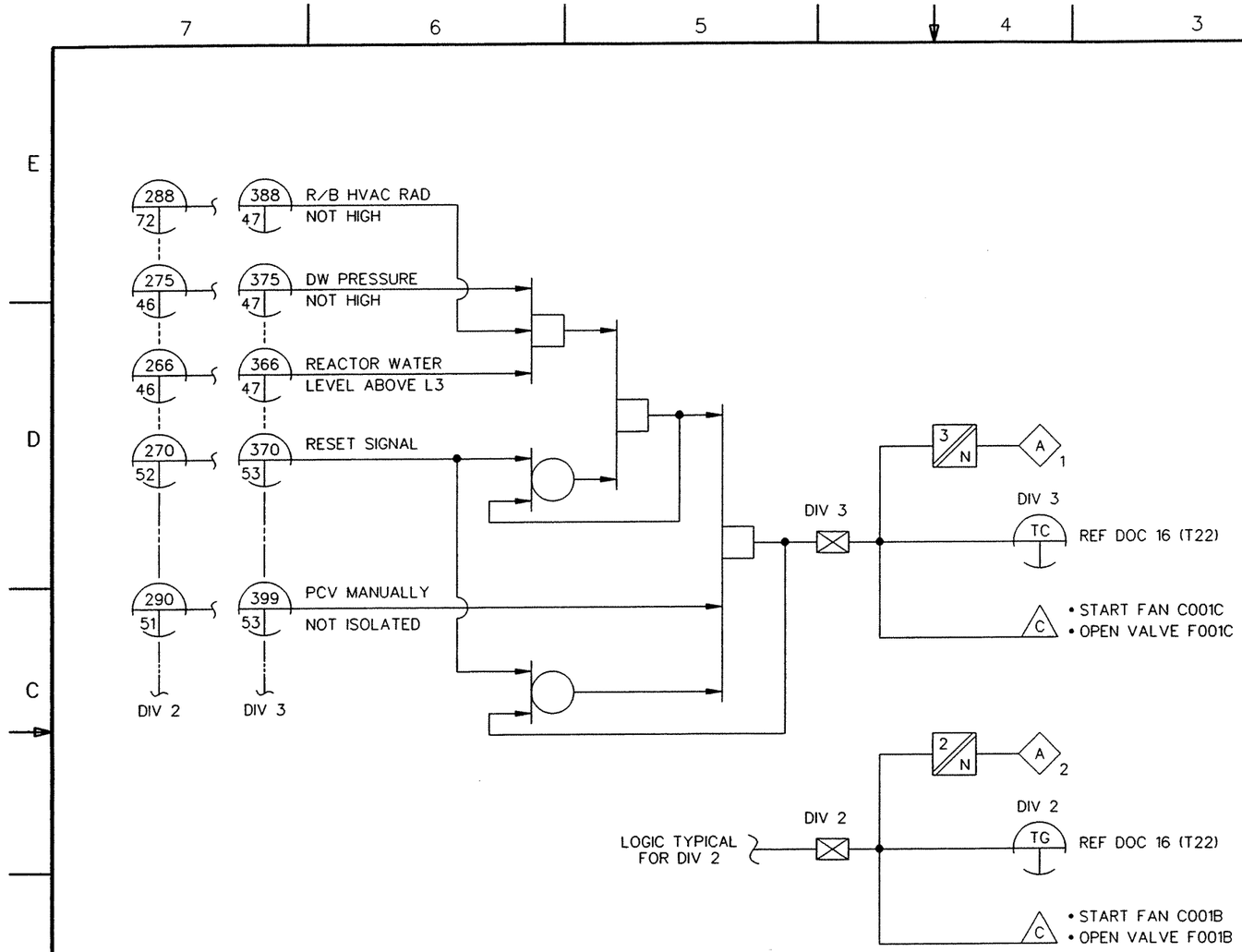

CONTROL SWITCH		
OBSERVATIONAL MEASURES		
USE	SPECIFICATION	LOCATION
ANNUNCIATOR		
NO.	INDICATOR	LOCATION
1	SGTS-C INITIATED	MCR
2	SGTS-B INITIATED	MCR
OTHERS		
SGTS INITIATION LOGIC		

FIGURE 7.3-5 LEAK DETECTION AND ISOLATION SYSTEM IBD (Sheet 73 of 77)

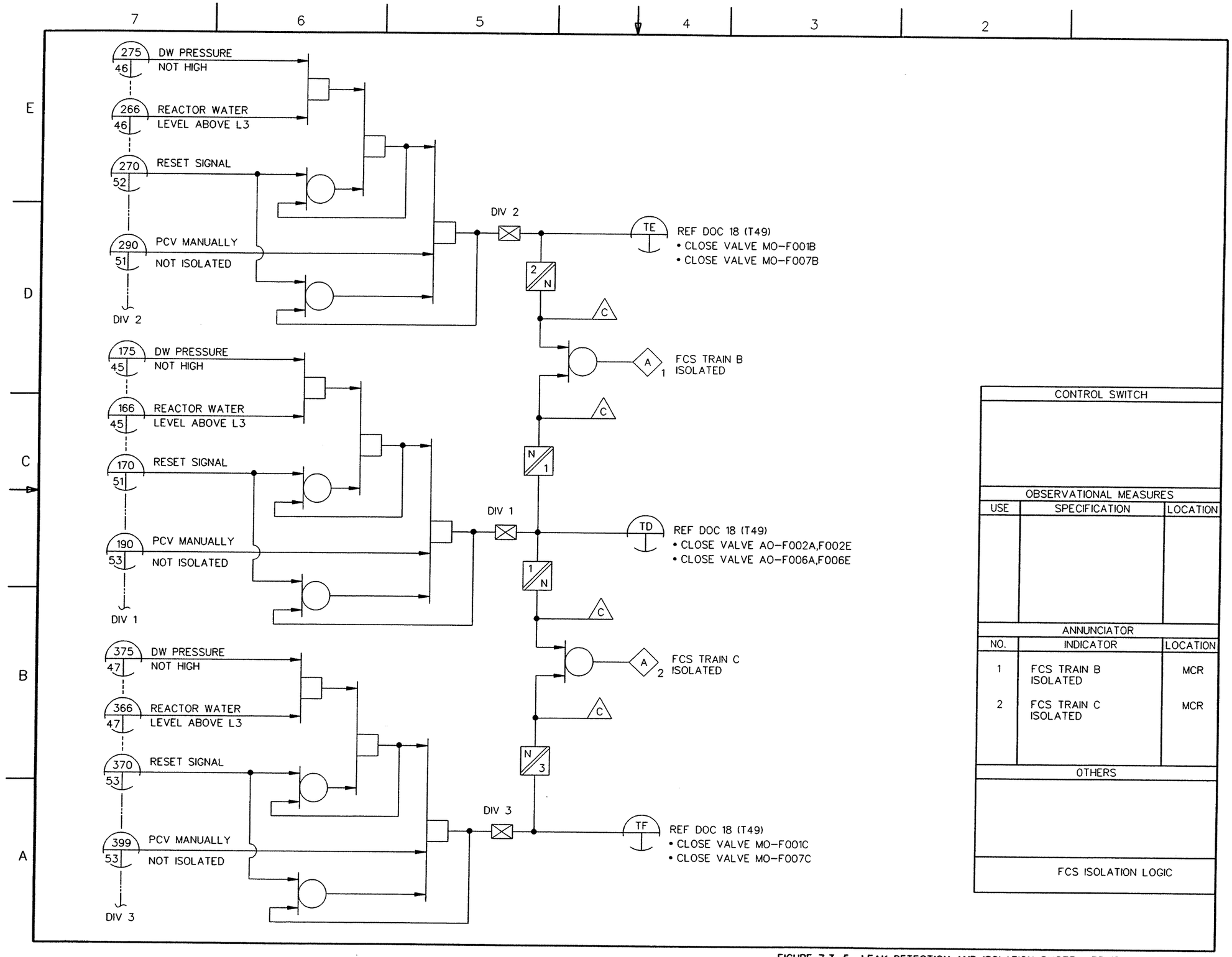

FIGURE 7.3-5 LEAK DETECTION AND ISOLATION SYSTEM IBD (Sheet 74 of 77)

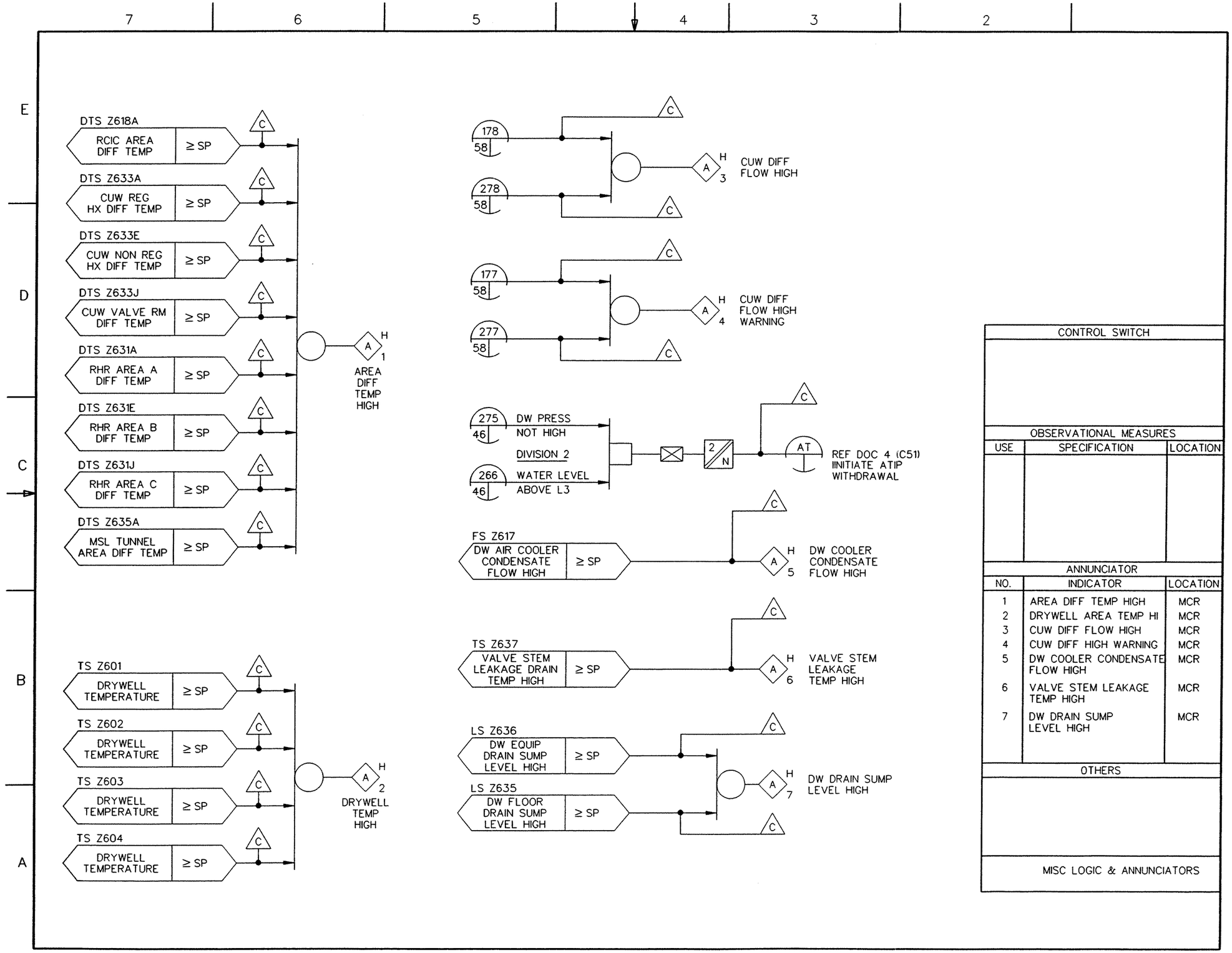

FIGURE 7.3-5 LEAK DETECTION AND ISOLATION SYSTEM IBD (Sheet 75 of 77)

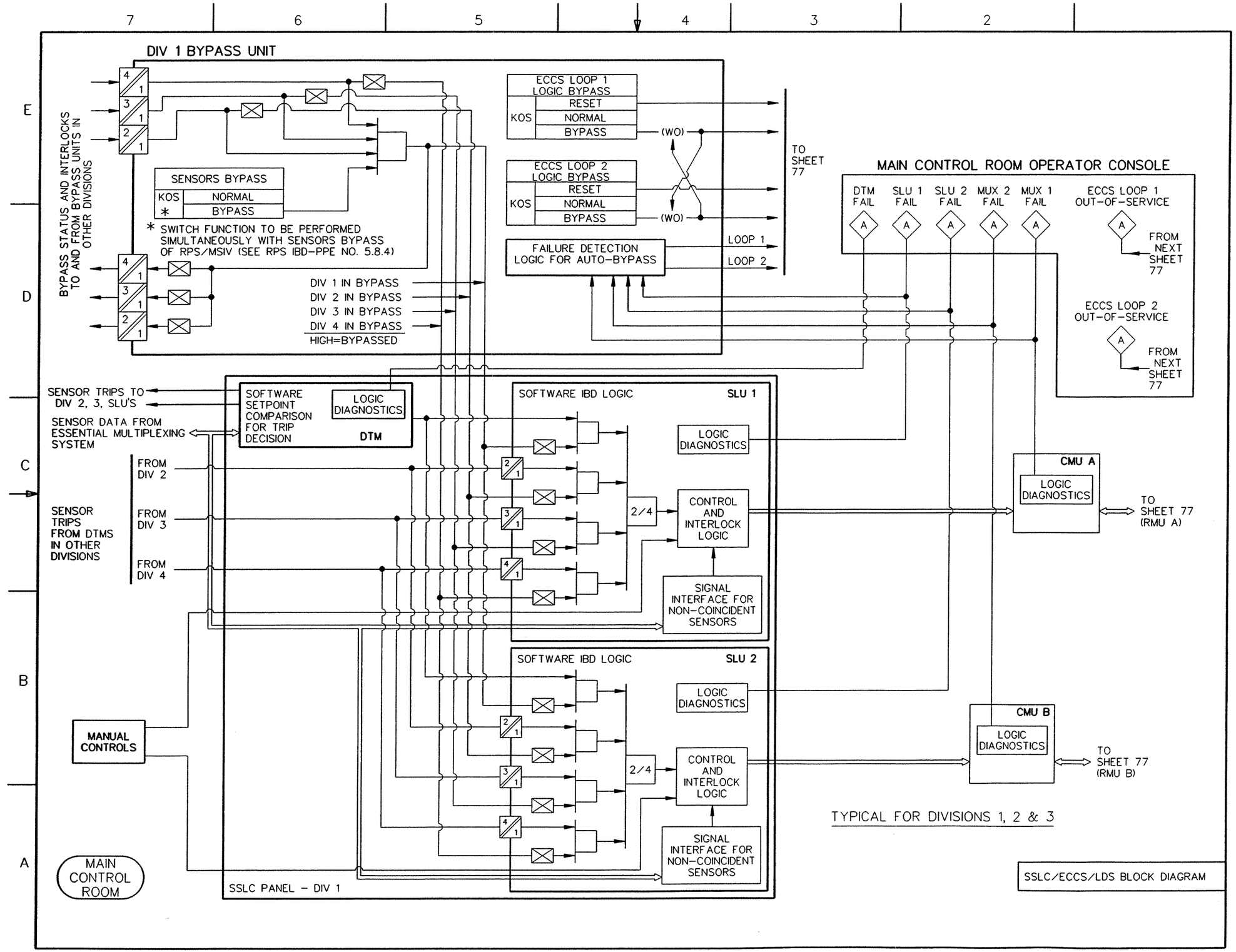

FIGURE 7.3-5 LEAK DETECTION AND ISOLATION SYSTEM IBD (Sheet 76 of 77)

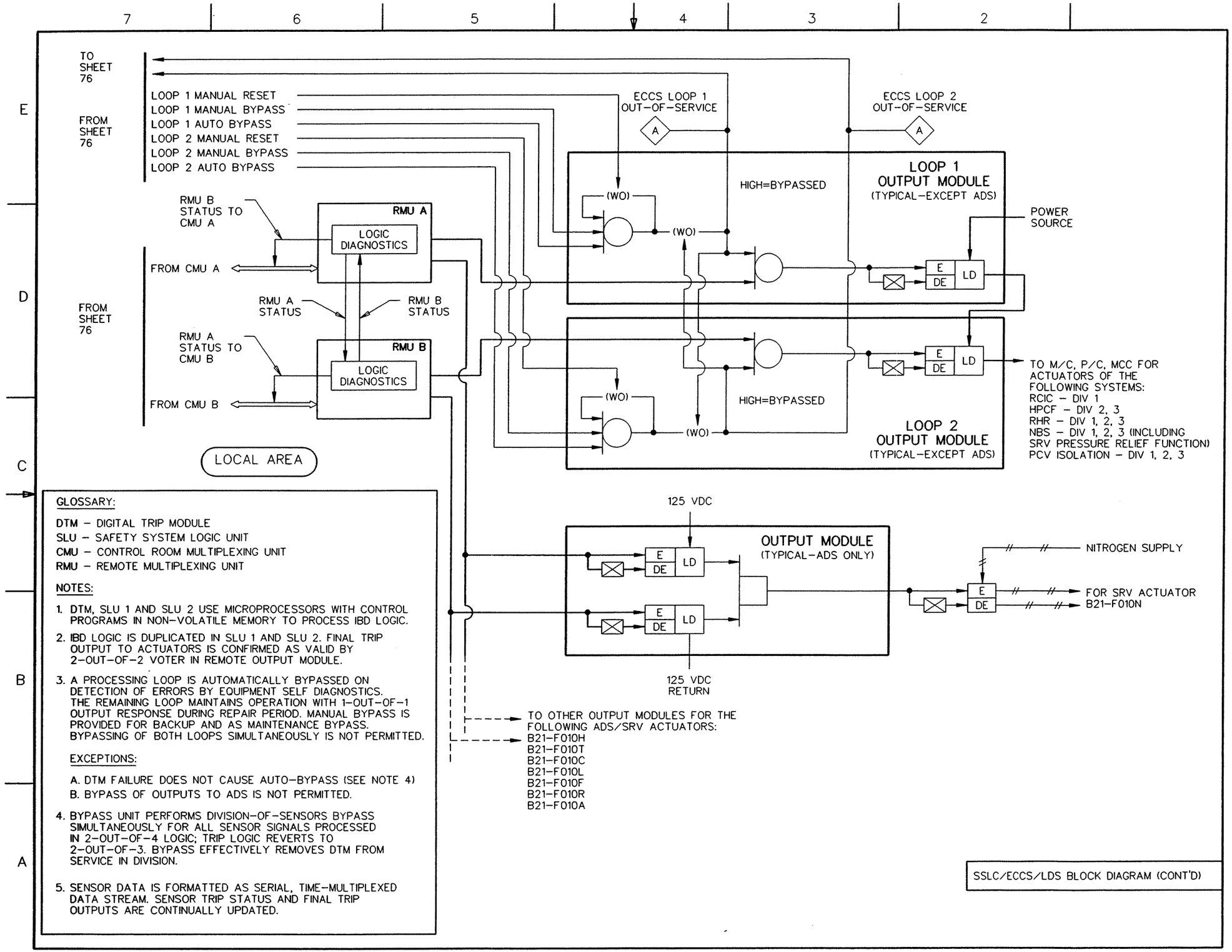

GLOSSARY:

DTM – DIGITAL TRIP MODULE
SLU – SAFETY SYSTEM LOGIC UNIT
CMU – CONTROL ROOM MULTIPLEXING UNIT
RMU – REMOTE MULTIPLEXING UNIT

NOTES:

1. DTM, SLU 1 AND SLU 2 USE MICROPROCESSORS WITH CONTROL PROGRAMS IN NON-VOLATILE MEMORY TO PROCESS IBD LOGIC.
2. IBD LOGIC IS DUPLICATED IN SLU 1 AND SLU 2. FINAL TRIP OUTPUT TO ACTUATORS IS CONFIRMED AS VALID BY 2-OUT-OF-2 VOTER IN REMOTE OUTPUT MODULE.
3. A PROCESSING LOOP IS AUTOMATICALLY BYPASSED ON DETECTION OF ERRORS BY EQUIPMENT SELF DIAGNOSTICS. THE REMAINING LOOP MAINTAINS OPERATION WITH 1-OUT-OF-1 OUTPUT RESPONSE DURING REPAIR PERIOD. MANUAL BYPASS IS PROVIDED FOR BACKUP AND AS MAINTENANCE BYPASS. BYPASSING OF BOTH LOOPS SIMULTANEOUSLY IS NOT PERMITTED.

   EXCEPTIONS:

   A. DTM FAILURE DOES NOT CAUSE AUTO-BYPASS (SEE NOTE 4)
   B. BYPASS OF OUTPUTS TO ADS IS NOT PERMITTED.
4. BYPASS UNIT PERFORMS DIVISION-OF-SENSORS BYPASS SIMULTANEOUSLY FOR ALL SENSOR SIGNALS PROCESSED IN 2-OUT-OF-4 LOGIC; TRIP LOGIC REVERTS TO 2-OUT-OF-3. BYPASS EFFECTIVELY REMOVES DTM FROM SERVICE IN DIVISION.
5. SENSOR DATA IS FORMATTED AS SERIAL, TIME-MULTIPLEXED DATA STREAM. SENSOR TRIP STATUS AND FINAL TRIP OUTPUTS ARE CONTINUALLY UPDATED.

FIGURE 7.3-5 LEAK DETECTION AND ISOLATION SYSTEM IBD (Sheet 77 of 77)

NOTES:

1. AUTOMATIC SGTS B(C) INITIATION FROM LDS (E31-1030) SIGNAL FOR REACTOR WATER LEVEL LOW (L3) OR DRYWELL PRESSURE HIGH OR R/B EXHAUST RADIATION HIGH INCLUDING PURGE EXHAUST, OR FUEL HANDLING AREA RADIATION HIGH AND MANUAL SGTS INITIATION WHEN SPENT FUEL STORAGE POOL LEVEL LOW ALARMS. MANUAL PULL LOCK STOP OF SGTS C(B) AFTER CONFIRMATION OF SGTS B(C) OPERATION.
2. TRIAL RUN POSITION IS USED IN PLANT SCHEDULED INSPECTION.
3. SETPOINT VALUE IS A REFERENCE ITEM IN IBD.
4. SGTS FAN B(C) TIME DELAY FOR STOP SIGNAL TO ALLOW ELECTRIC HEATERS B(C) TO COOL.

SUPPLEMENTAL DOCUMENTS UNDER THE FOLLOWING IDENTITIES ARE TO BE USED IN CONJUNCTION WITH THIS DRAWING.

		REFERENCE DESIGNATOR
1.	STANDBY GAS TREATMENT SYSTEM P&ID	T22-1010
2.	PROCESS RADIATION MONITORING SYSTEM IBD	D11-1030
3.	LEAK DETECTION AND ISOLATION SYSTEM IED	E31-1010
4.	FUEL POOL COOLING & CLEANUP SYSTEM P&ID	G41-1010
5.	HEATING, VENTILATING & AIR CONDITIONING P&ID	U41-1010
6.	ELECTRICAL POWER & DISTRIBUTION SYSTEM	R10-1010

TABLE OF CONTENTS

SH NO.	TITLE
1	NOTES, REFERENCE DOCUMENTS
2	SGTS FAN C001B(C)
3	SGTS COOLING FAN C002C(B)
3	SGTS FILTER TRAIN OUTLET VALVE MO-F004B(C)
4	SGTS FILTER TRAIN INLET VALVE MO-F002B(C)
4	SGTS INLET ISOLATION VALVE AO-F001B(C)
5	SGTS ELECTRIC HEATER B(C)
6	SGTS PRE SPACE HEATER FAN C(B)
6	SGTS PRE SPACE HEATER C1,C2,(B1,B2)
7	SGTS AFTER SPACE HEATER FAN C(B)
7	SGTS AFTER SPACE HEATER C3,C4(B3,B4)
8	ANNUNCIATOR
9	ANNUNCIATOR
10	ANNUNCIATOR
11	ANNUNCIATOR

MPL NO. T22-1030

FIGURE 7.3-6 STANDBY GAS TREATMENT SYSTEM IBD (Sheet 1 of 11)

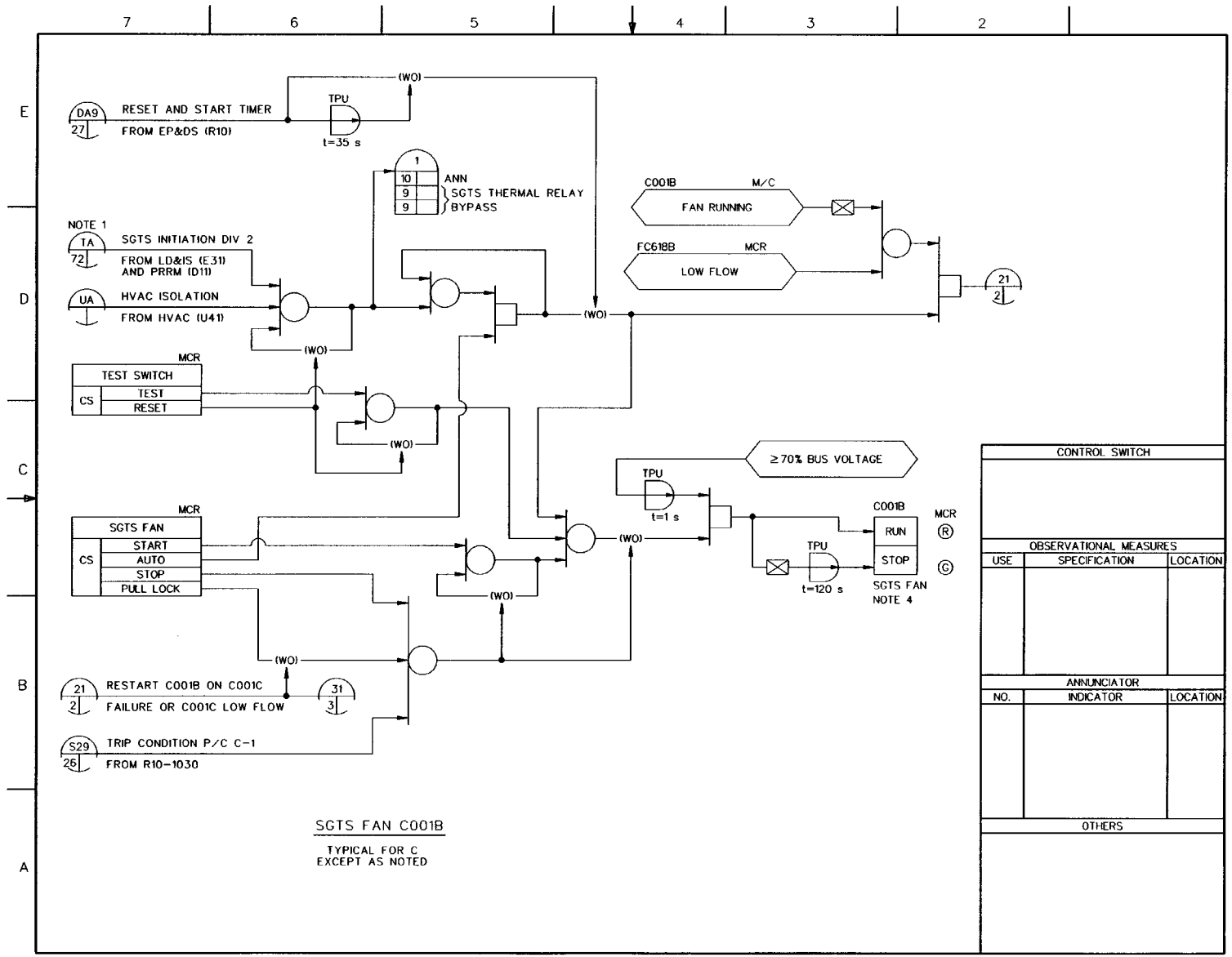

FIGURE 7.3-6 STANDBY GAS TREATMENT SYSTEM IBD (Sheet 2 of 11)

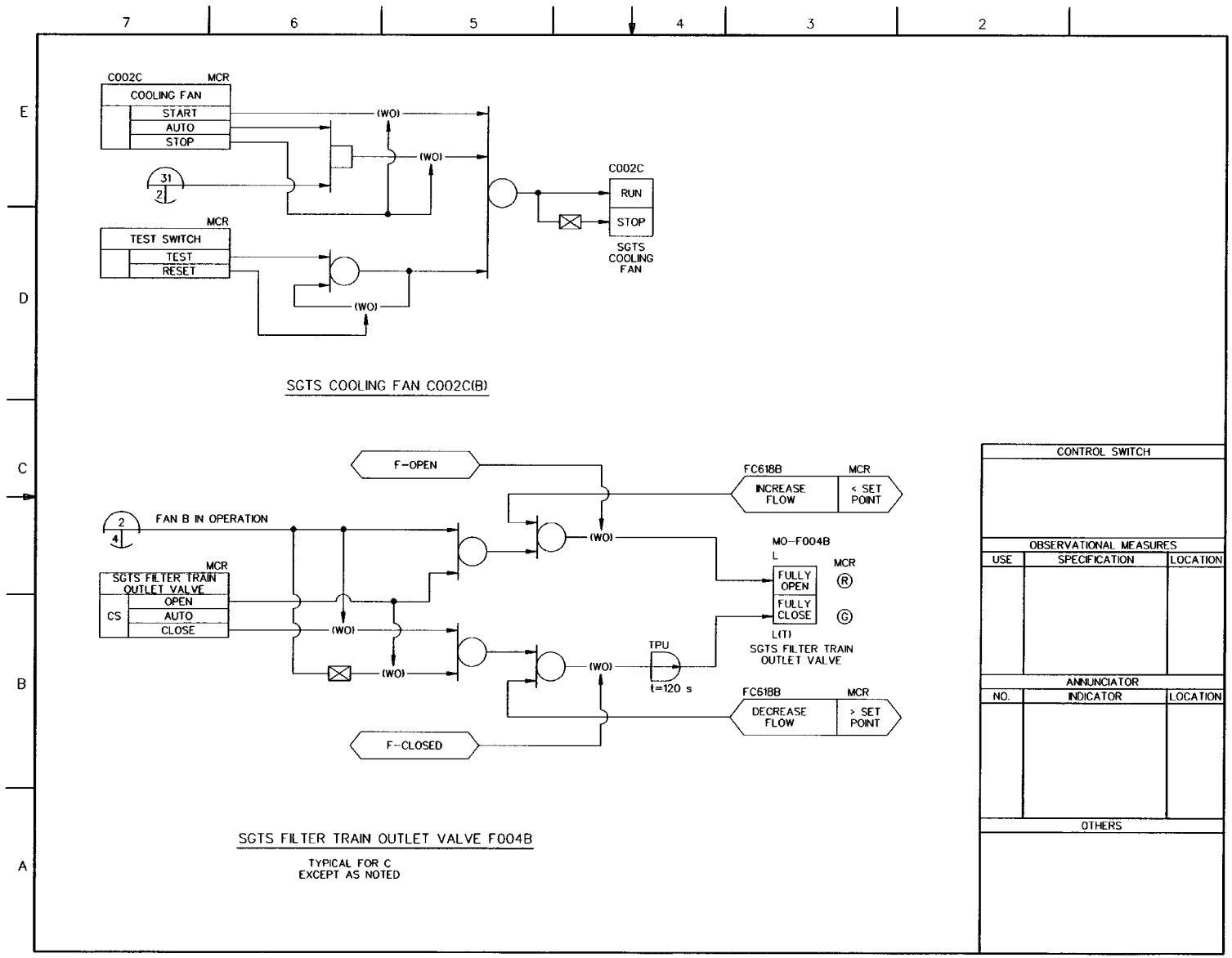

FIGURE 7.3-6 STANDBY GAS TREATMENT SYSTEM IBD (Sheet 3 of 11)

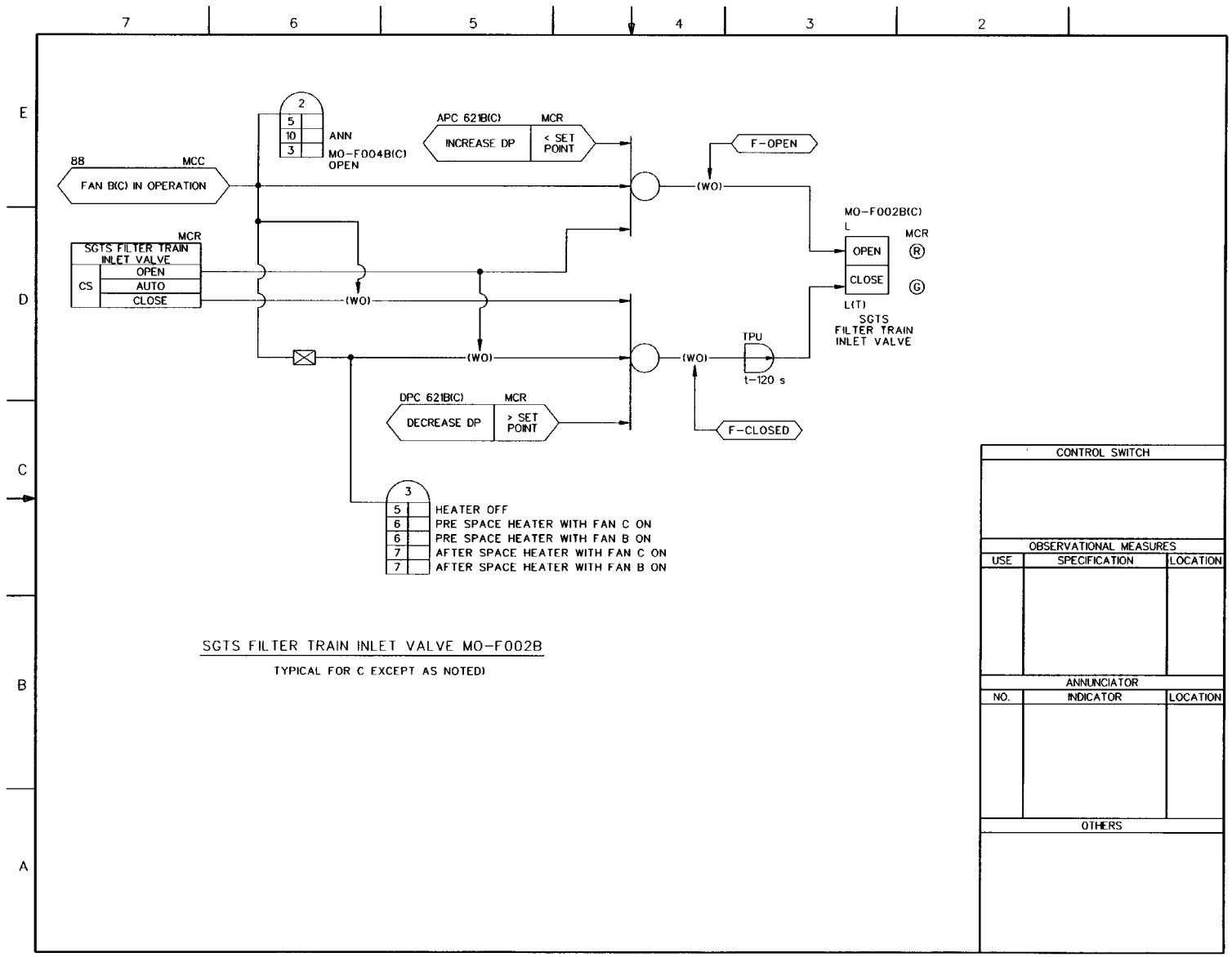

FIGURE 7.3-6 STANDBY GAS TREATMENT SYSTEM IBD (Sheet 4 of 11)

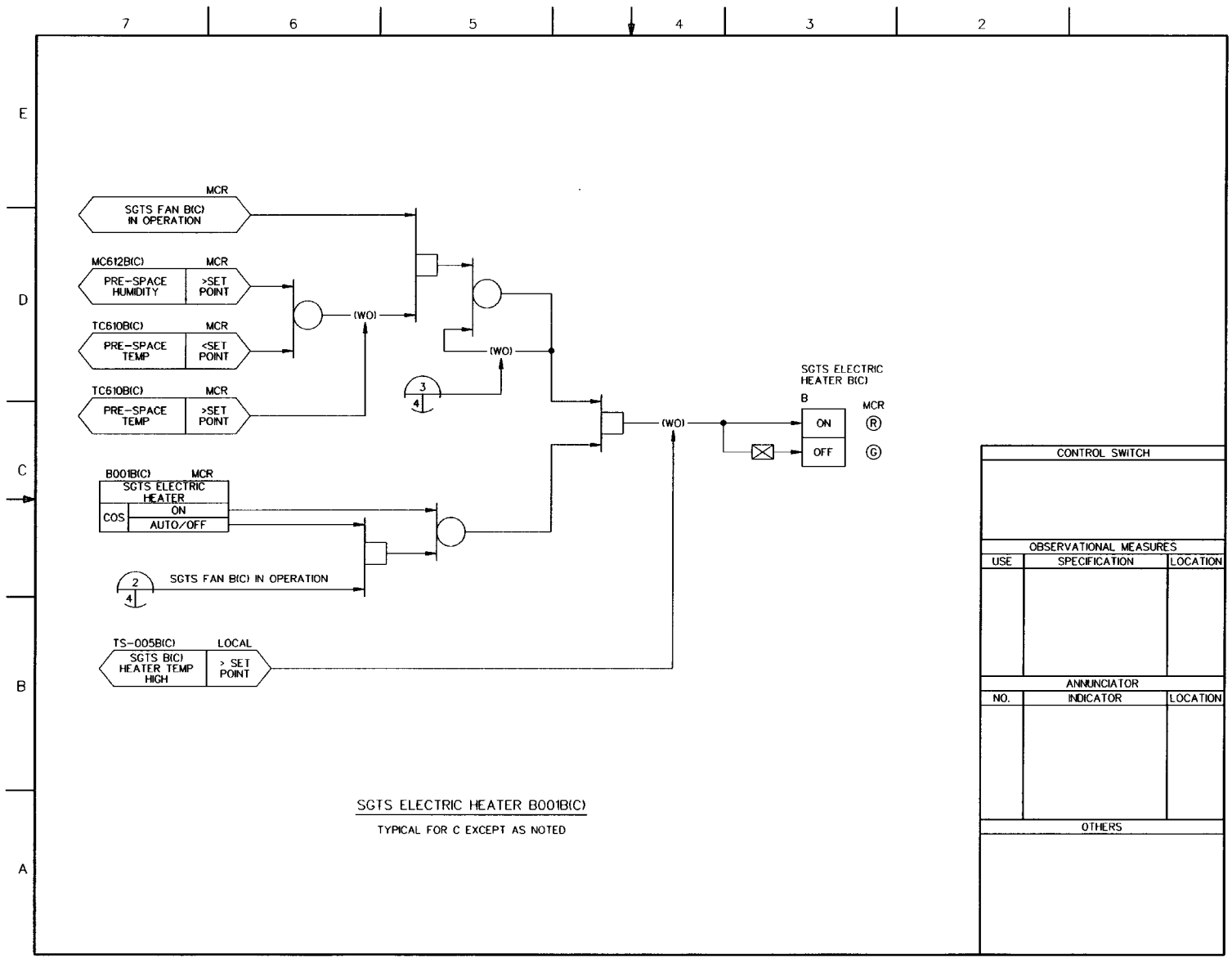

SGTS ELECTRIC HEATER B001B(C)

TYPICAL FOR C EXCEPT AS NOTED

FIGURE 7.3-6 STANDBY GAS TREATMENT SYSTEM IBD (Sheet 5 of 11)

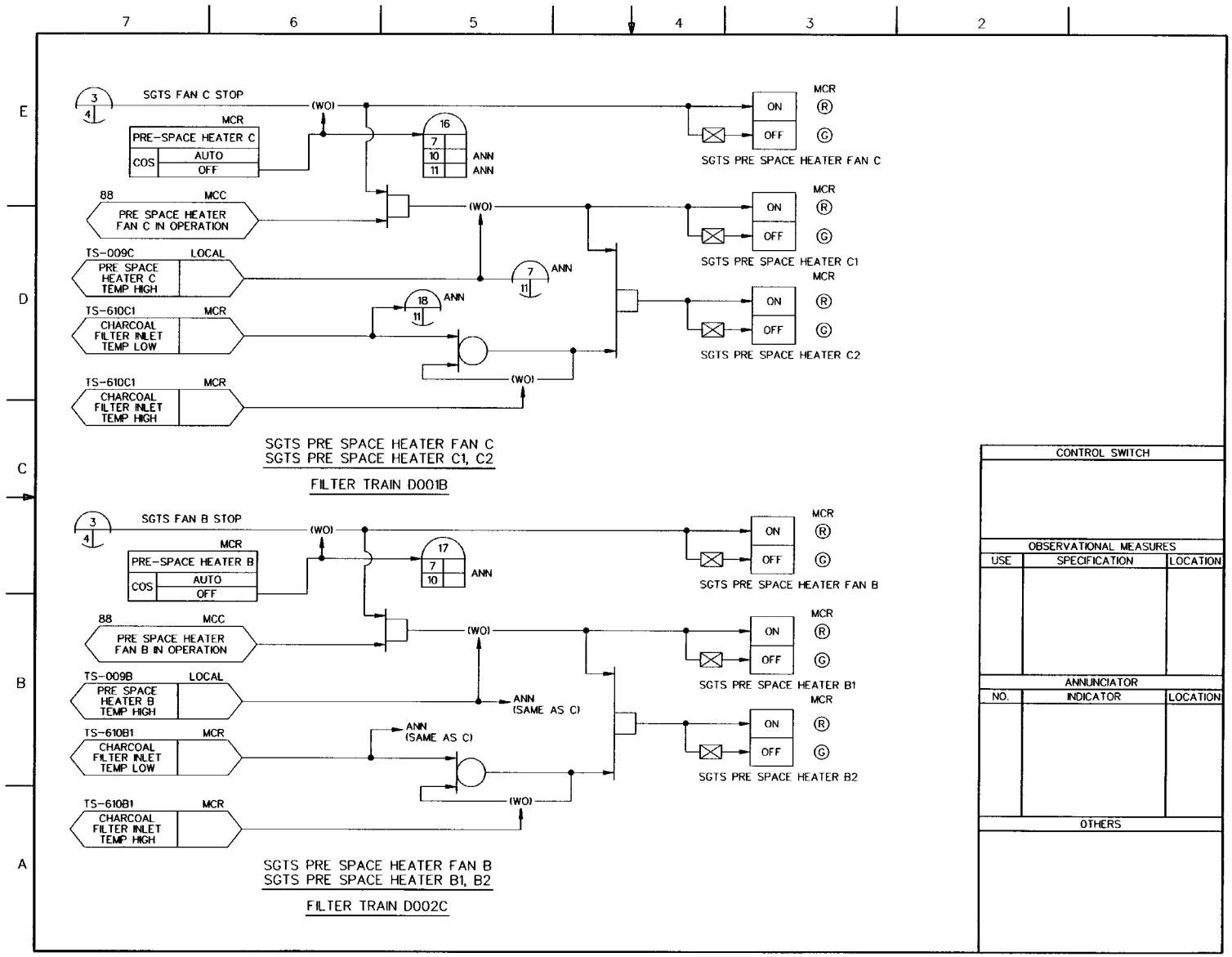

FIGURE 7.3-6 STANDBY GAS TREATMENT SYSTEM I&D (Sheet 6 of 11)

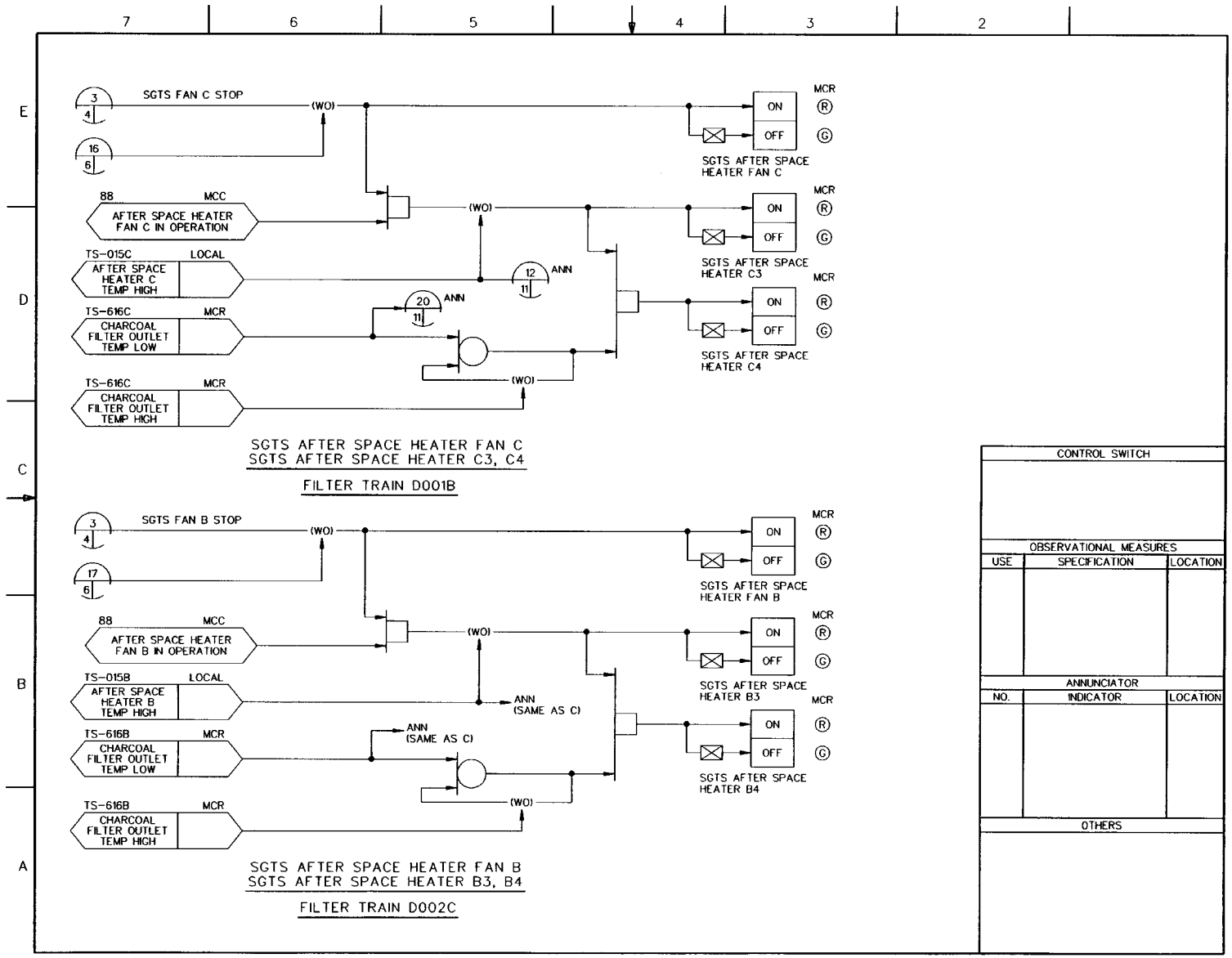

FIGURE 7.3-6 STANDBY GAS TREATMENT SYSTEM I&D (Sheet 7 of 11)

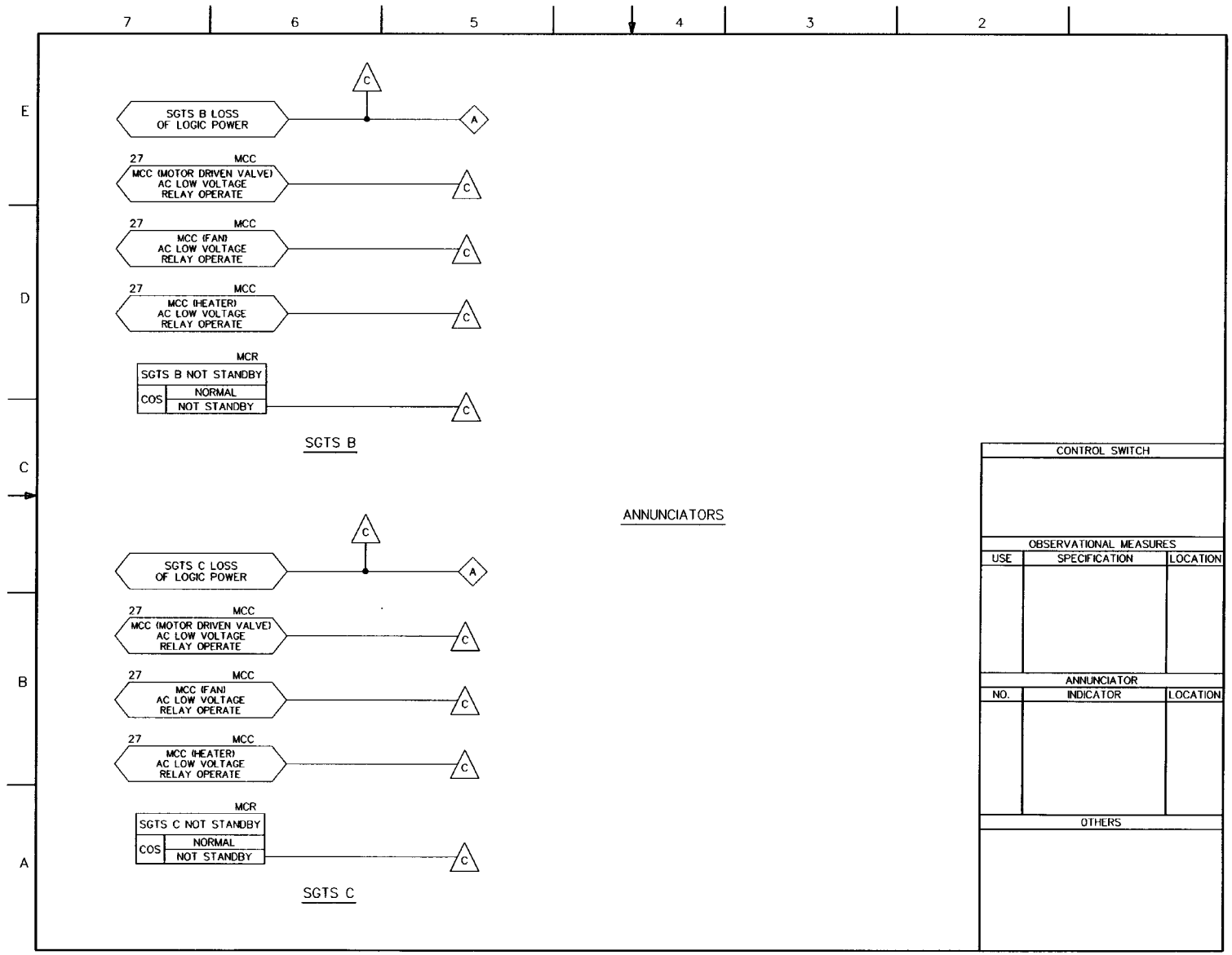

FIGURE 7.3-6 STANDBY GAS TREATMENT SYSTEM I&C (Sheet 8 of 11)

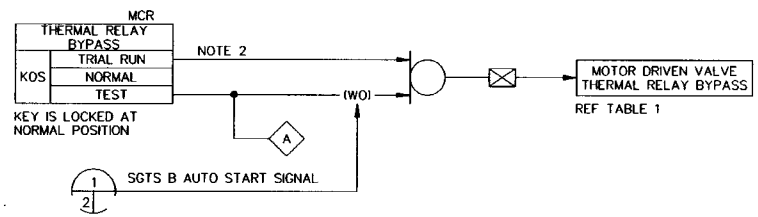

SGTS B

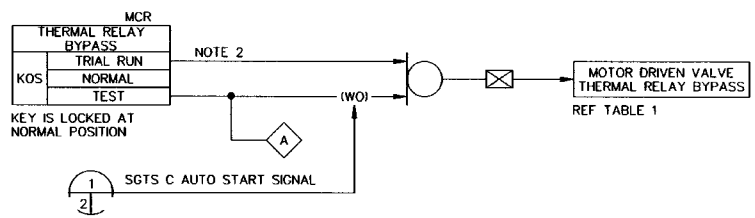

SGTS C

ANNUNCIATOR

TABLE 1: MOTOR DRIVEN VALVE THERMAL TRIP

SYSTEM	VALVE NO.	VALVE	POWER SUPPLY	REMARKS
SGTS B	T22-MO-F002B	SGTS FILTER TRAIN INLET VALVE	B	
	T22-MO-F004B	SGTS FILTER TRAIN OUTLET VALVE	B	
	T22-C001B	SGTS PROCESS FAN	B	
	T22-C002B	COOLING FAN	C	
SGTS C	T22-MO-F002C	SGTS FILTER TRAIN INLET VALVE	C	
	T22-MO-F004C	SGTS FILTER TRAIN OUTLET VALVE	C	
	T22-C001C	SGTS PROCESS FAN	C	
	T22-C002C	COOLING FAN	B	

CONTROL SWITCH

OBSERVATIONAL MEASURES		
USE	SPECIFICATION	LOCATION

ANNUNCIATOR		
NO.	INDICATOR	LOCATION

OTHERS

FIGURE 7.3-6 STANDBY GAS TREATMENT SYSTEM IBD (Sheet 9 of 11)

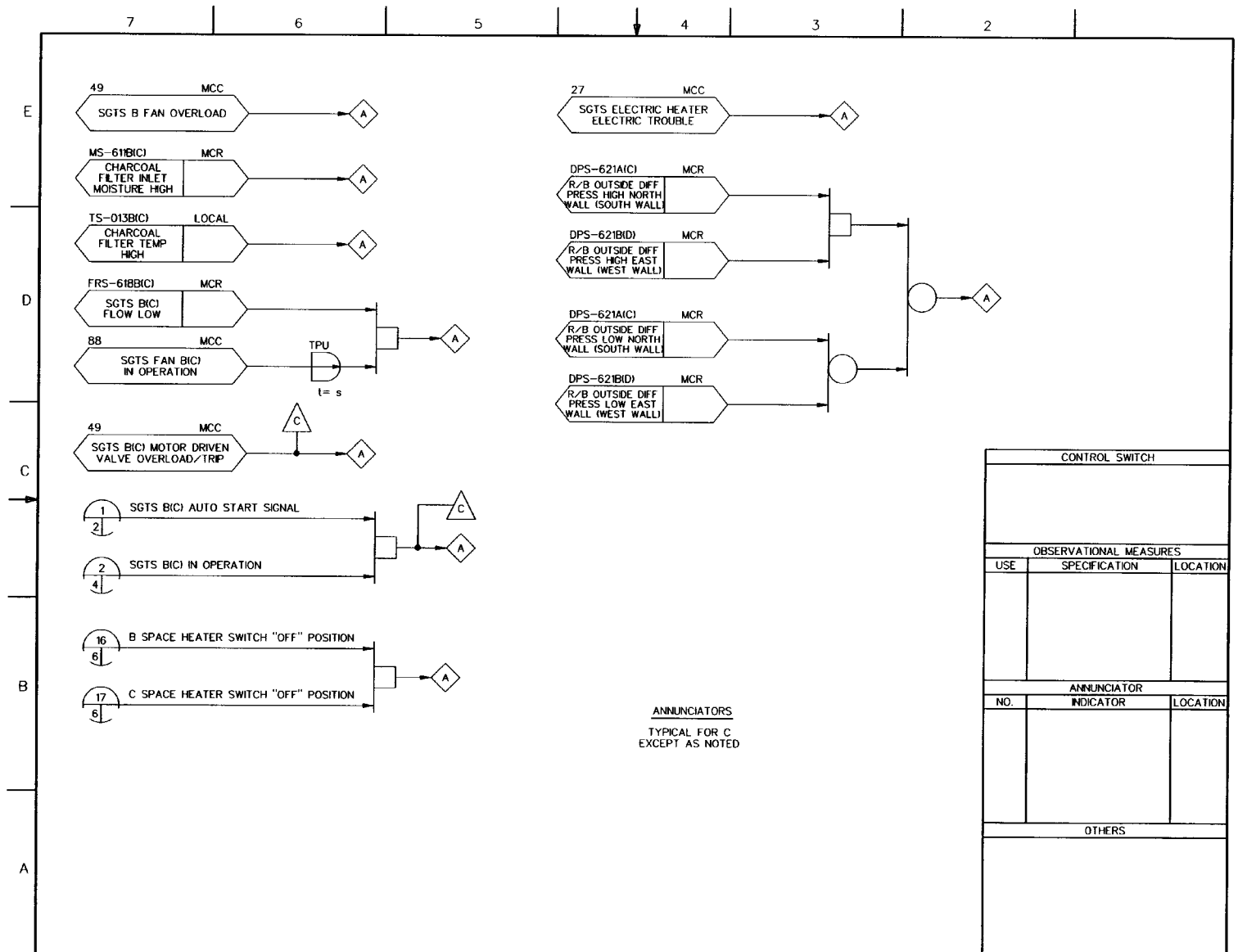

FIGURE 7.3-6 STANDBY GAS TREATMENT SYSTEM IBD (Sheet 10 of 11)

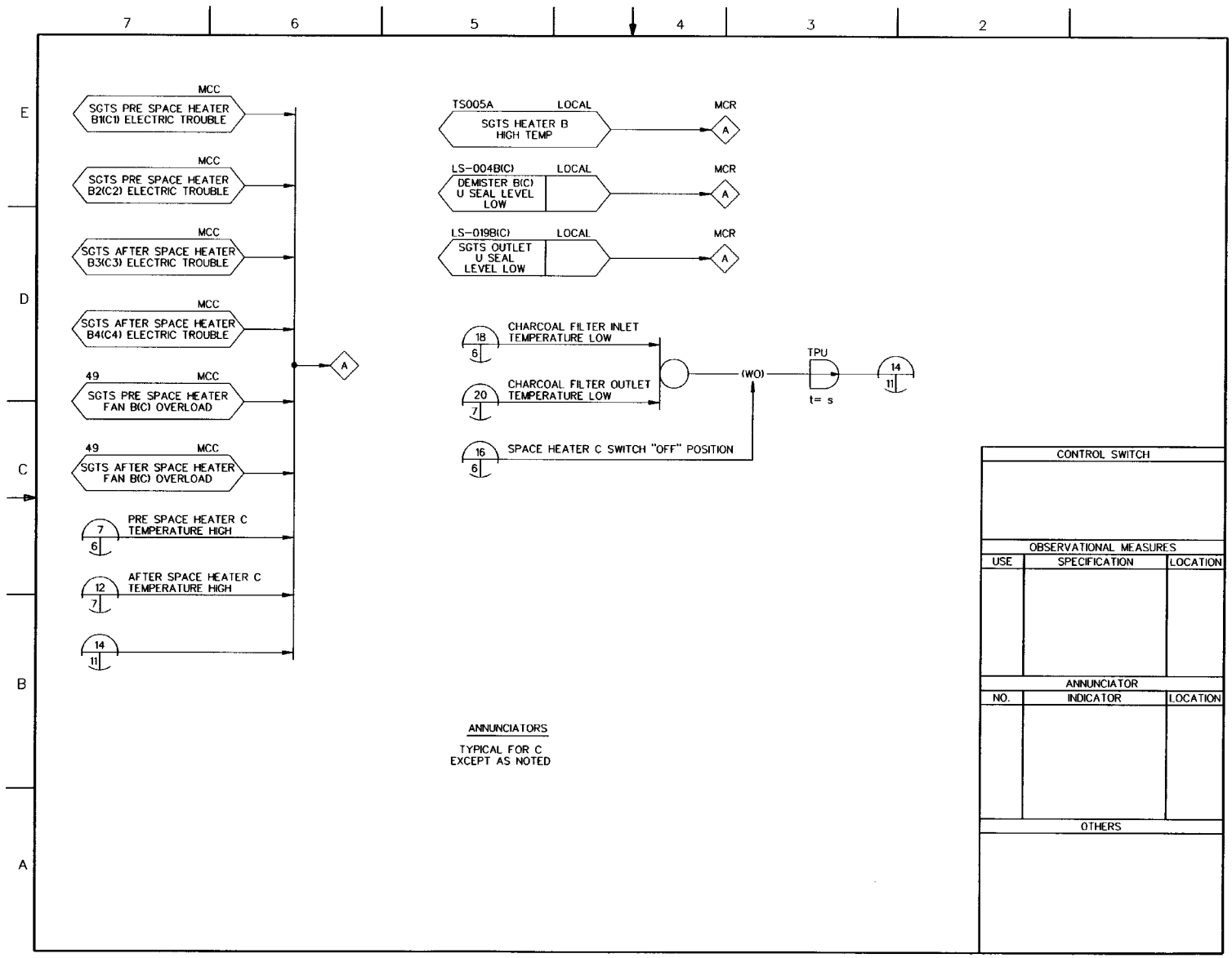

FIGURE 7.3-6 STANDBY GAS TREATMENT SYSTEM I&D (Sheet 11 of 11)

NO.	TITLE
1	NOTES, CONTENTS
2	RCW PUMP
3	RCW MAKE-UP VALVE
4	RHR/HX RCW OUTLET VALVE
5	D/G RCW OUTLET VALVE
6	RCW SEPARATE VALVE
7	RCW SAFETY RELATED/ NON SAFETY-RELATED SEPARATION VALVE
8	RCW COOLING WATER TEMP CONTROL VALVE
9	PCV ISOLATION VALVE
10	RCW NON ESSENTIAL EQUIPMENT COOLING WATER STOP VALVE
11	RSW PUMP
12	RCW HX OUTLET VALVE
13	STRAINER BACKWASH VALVE
14	RCW HX DILUTION VALVE
15	MOTOR VALVE THERMAL BYPASS
16	ANNUNCIATOR (1)
17	ANNUNCIATOR (2)
18	RCW HX/RSW INLET VALVE
19	RSW (A) SUPPLY VALVE

NOTES:

1. UNLESS OTHERWISE NOTED, THE POWER SUPPLY OF ASSISTS IS ESSENTIAL POWER SUPPLY.
2. "#" FIXED NUMBERS IN THIS DIAGRAM INDICATE THE SWGR FUNTIONAL NUMBERS.
3. THIS IBD EXPRESSLY FOR SYSTEM (A), AND TYPICAL FOR SYSTEM (B),(C).
4. INTERFACES FROM THE REMOTE SHUTDOWN SYSTEM ARE PROVIDED IN DIVISIONS A AND B ONLY.

REFERENCE DOCUMENT	MPL NO.
1. REACTOR BUILDING COOLING WATER SYS P&ID	P21-1010
2. REACTOR SERVICE WATER SYSTEM P&ID	P41-1010
3. REMOTE SHUTDOWN SYSTEM IBD	C61-1030
4. RESIDUAL HEAT REMOVAL SYSTEM IBD	E11-1030
5. RADWASTE SYSTEM P&ID	K17-1010
6. ELECTRICAL POWER DISTRIBUTION SYSTEM	R10-1010
7. SUPPRESSION POOL TEMPERATURE MONITORING SYSTEM IBD	T53-1030
8. REACTOR WATER CLEANUP SYSTEM IBD	G31-1030

MPL NO. P21/P41-1030

FIGURE 7.3-7 REACTOR BUILDING COOLING WATER/REACTOR SERVICE WATER SYSTEM IBD (Sheet 1 of 19)

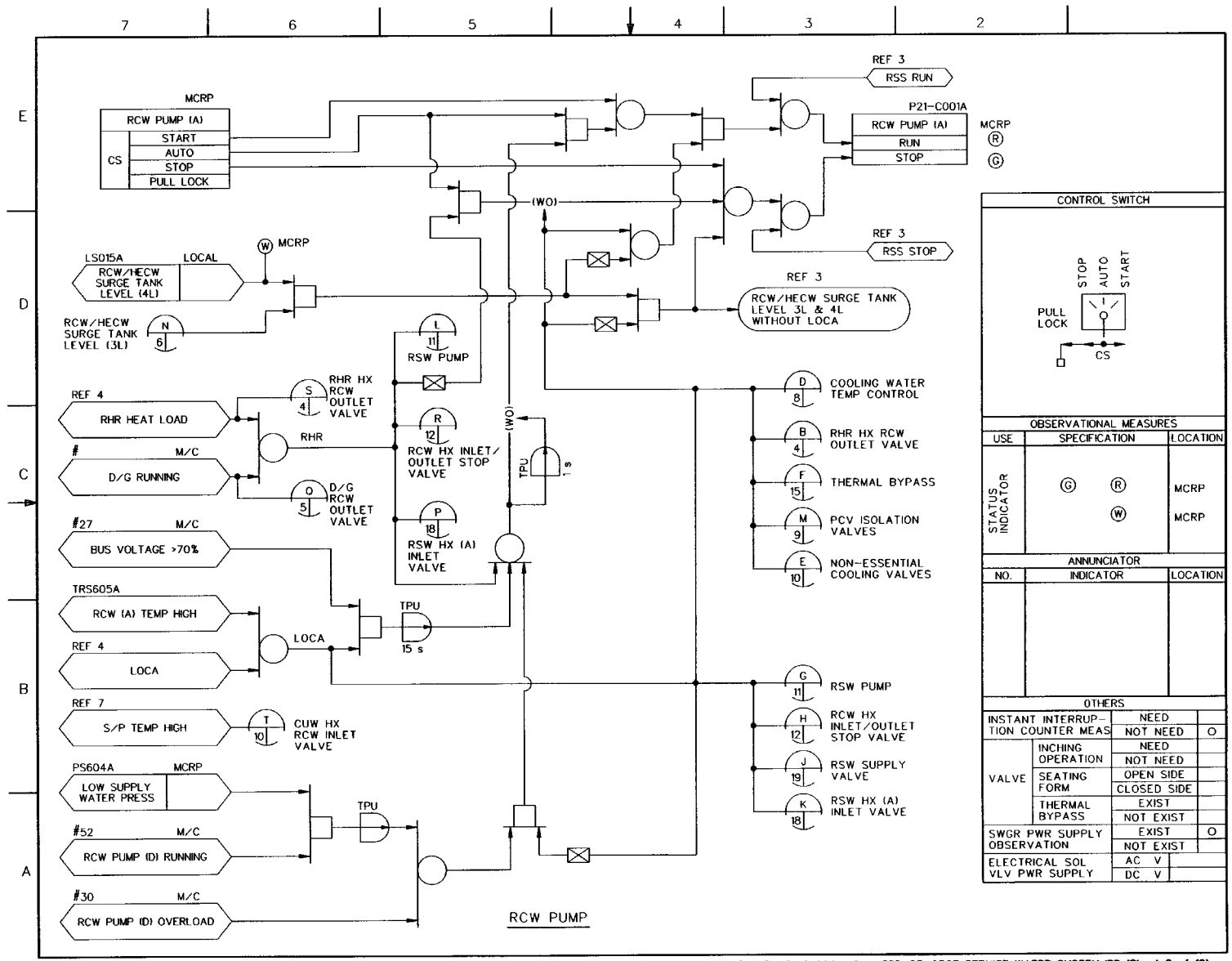

FIGURE 7.3-7 REACTOR BUILDING COOLING WATER/REACTOR SERVICE WATER SYSTEM 1BD (Sheet 2 of 19)

21-241

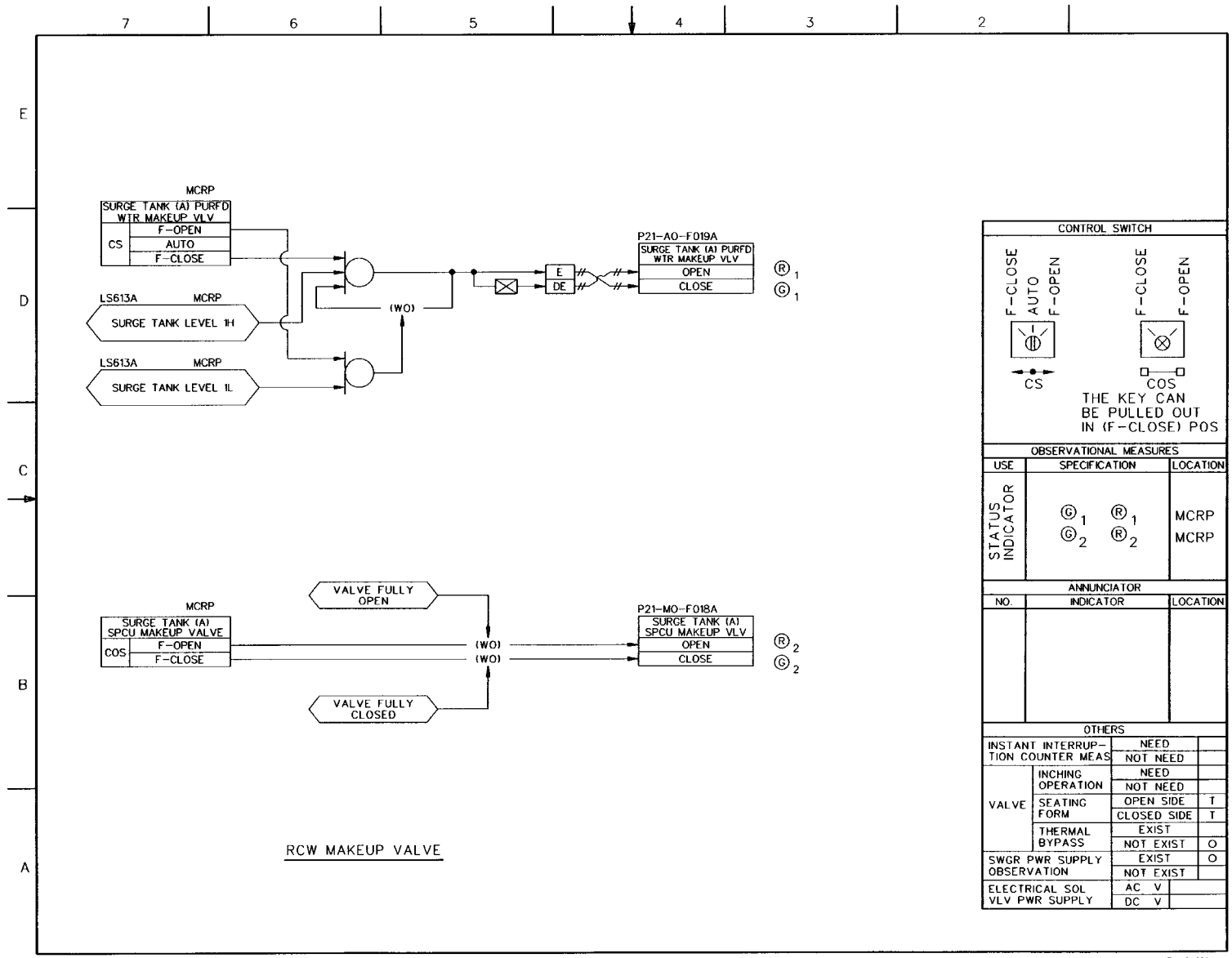

FIGURE 7.3-7 REACTOR BUILDING COOLING WATER/REACTOR SERVICE WATER SYSTEM IBD (Sheet 3 of 19)

21-242

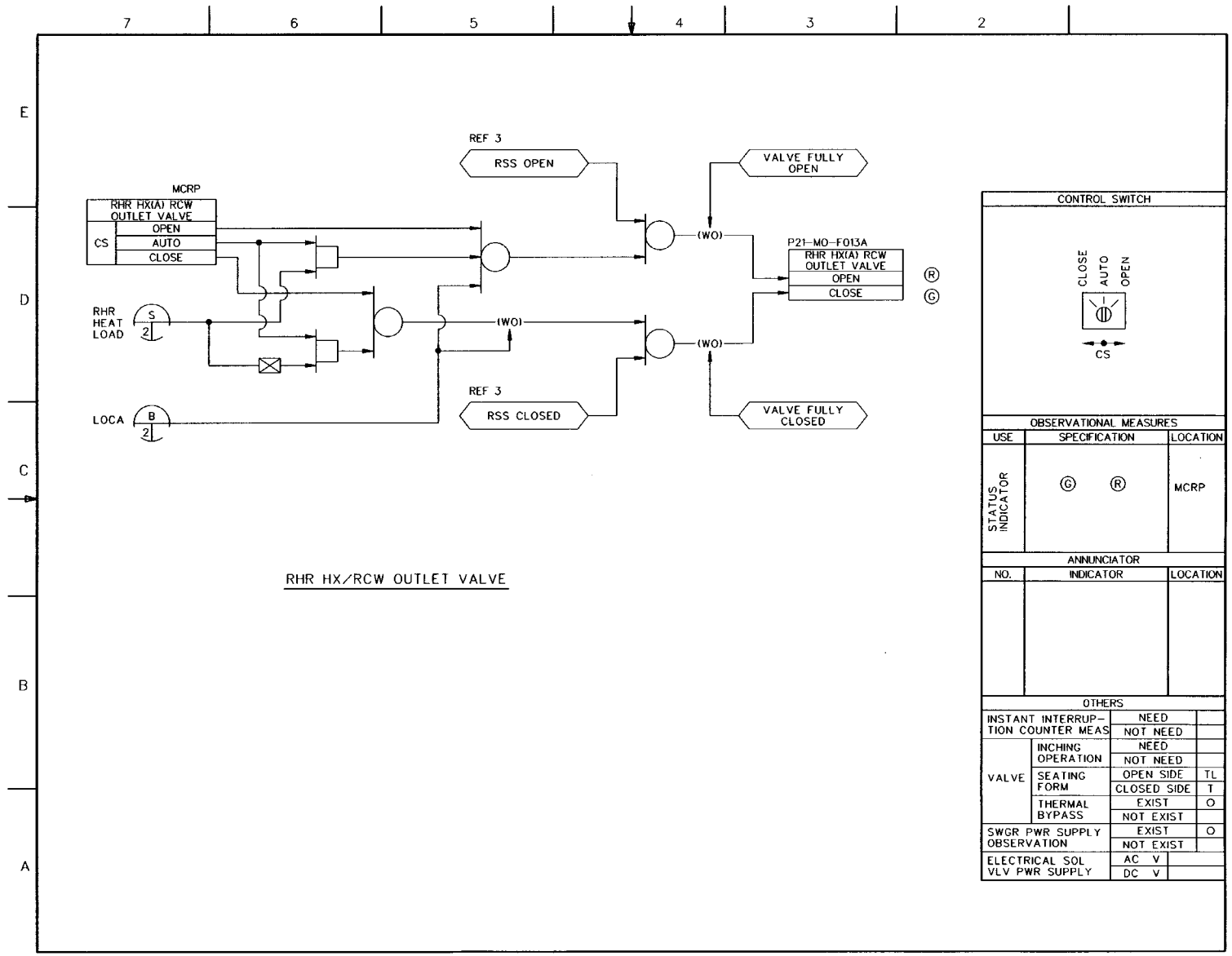

FIGURE 7.3-7 REACTOR BUILDING COOLING WATER/REACTOR SERVICE WATER SYSTEM IBD (Sheet 4 of 19)

21-243

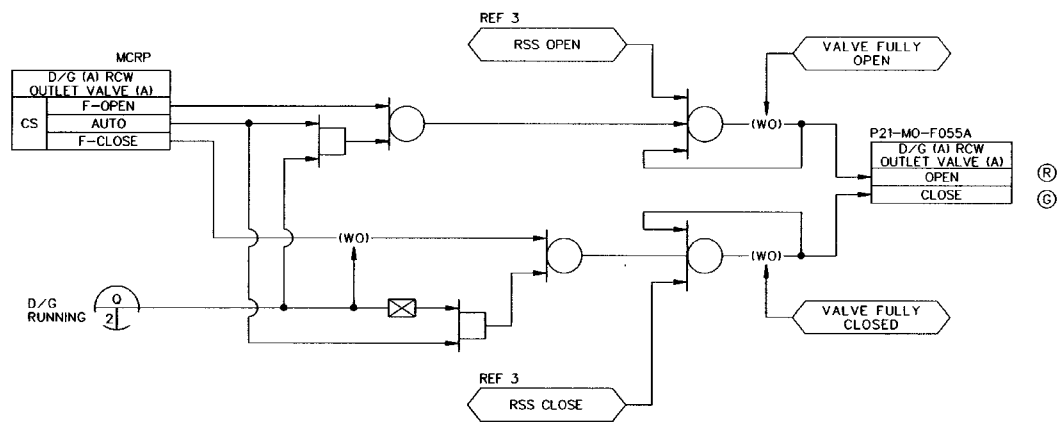

CONTROL SWITCH
F-CLOSE AUTO F-OPEN CS

OBSERVATIONAL MEASURES		
USE	SPECIFICATION	LOCATION
STATUS INDICATOR	G R	MCRP

ANNUNCIATOR		
NO.	INDICATOR	LOCATION

OTHERS			
INSTANT INTERRUPTION COUNTER MEAS		NEED	
		NOT NEED	
VALVE	INCHING OPERATION	NEED	
		NOT NEED	
	SEATING FORM	OPEN SIDE	TL
		CLOSED SIDE	L(T)
	THERMAL BYPASS	EXIST	O
		NOT EXIST	
SWGR PWR SUPPLY OBSERVATION		EXIST	O
		NOT EXIST	
ELECTRICAL SOL VLV PWR SUPPLY		AC V	
		DC V	

FIGURE 7.3-7 REACTOR BUILDING COOLING WATER/REACTOR SERVICE WATER SYSTEM (BD (Sheet 5 of 19)

21-244

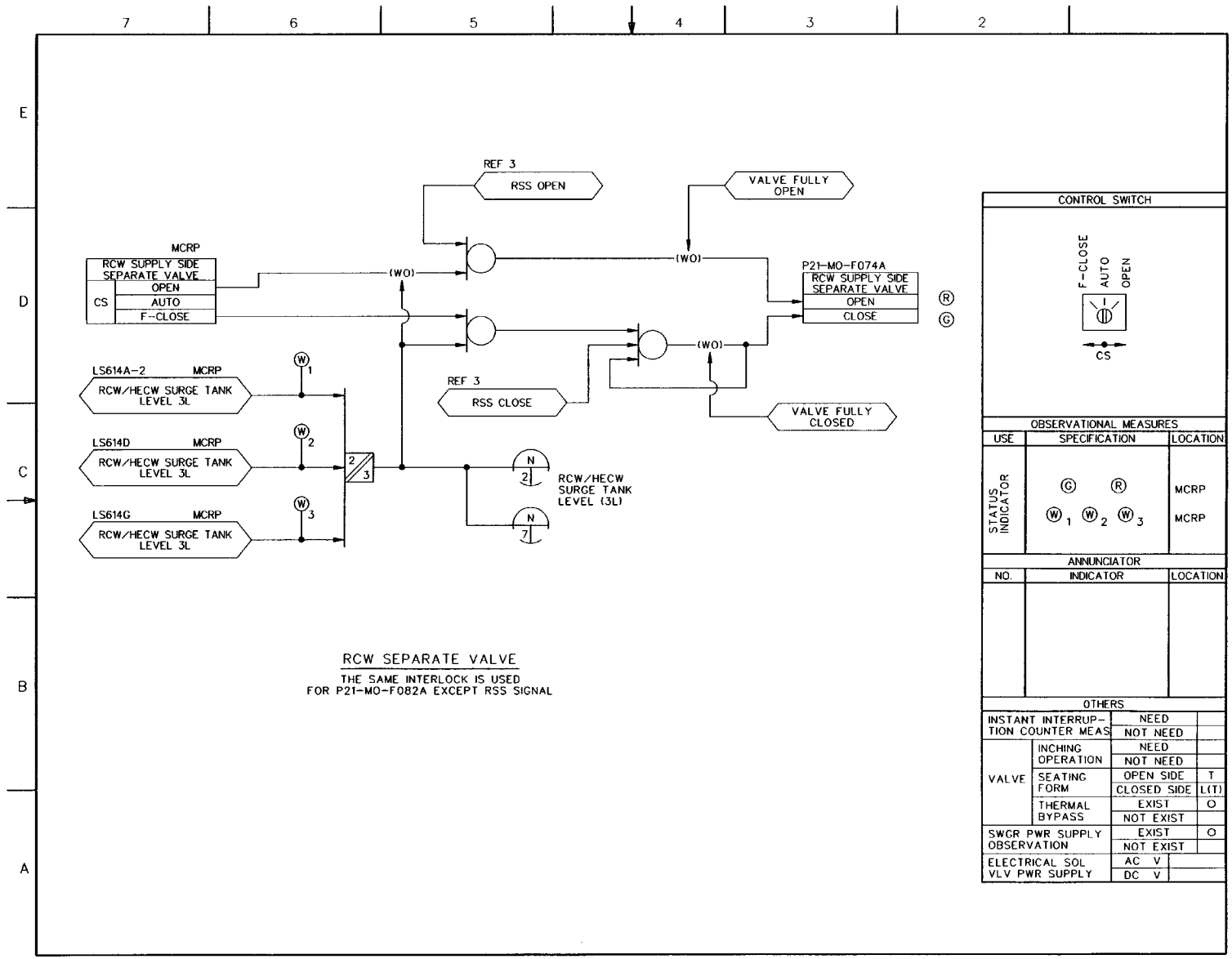

FIGURE 7.3-7 REACTOR BUILDING COOLING WATER/REACTOR SERVICE WATER SYSTEM IBD (Sheet 6 of 19)

21-245

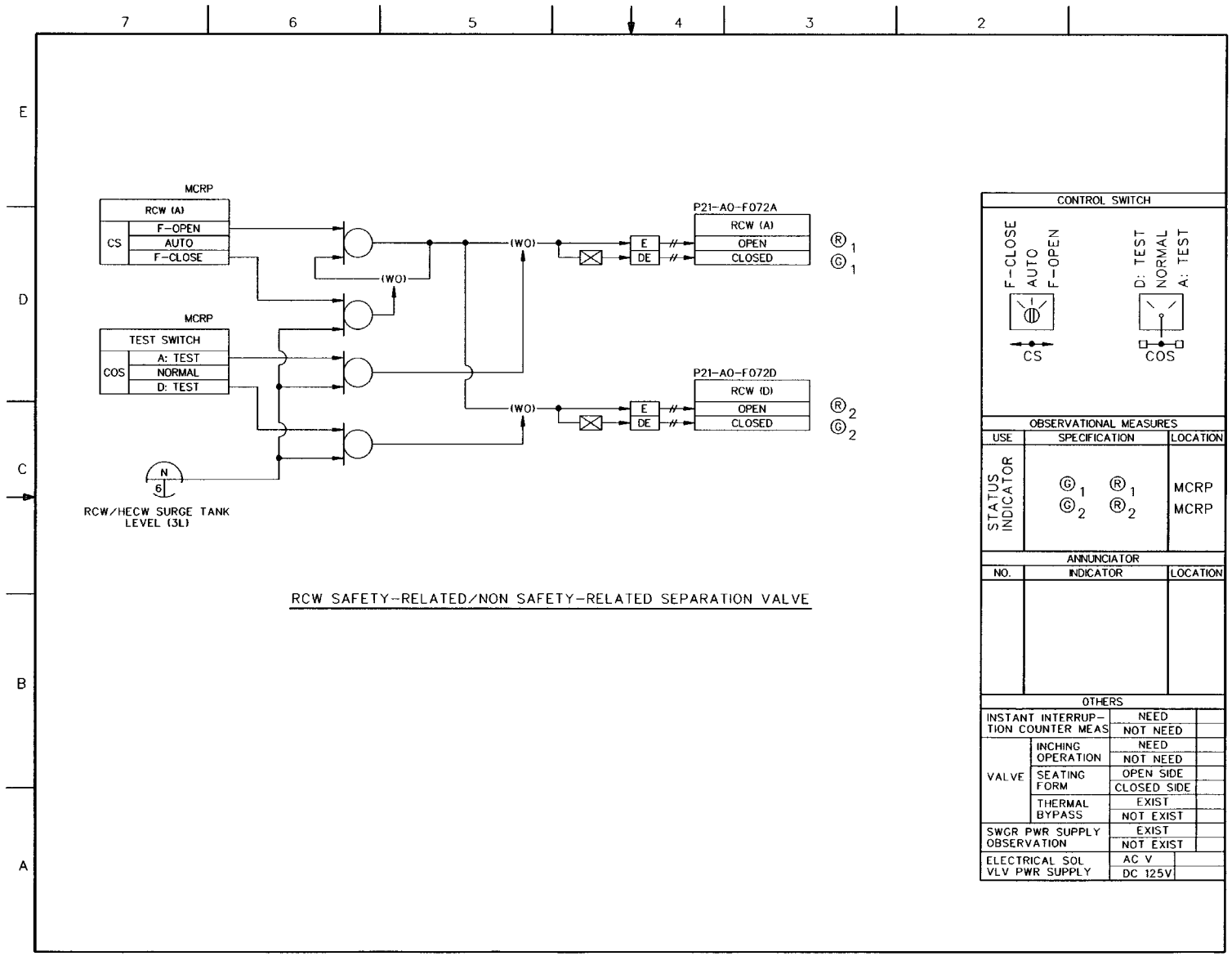

FIGURE 7.3-7 REACTOR BUILDING COOLING WATER/REACTOR SERVICE WATER SYSTEM (BD (Sheet 7 of 19)

21-246

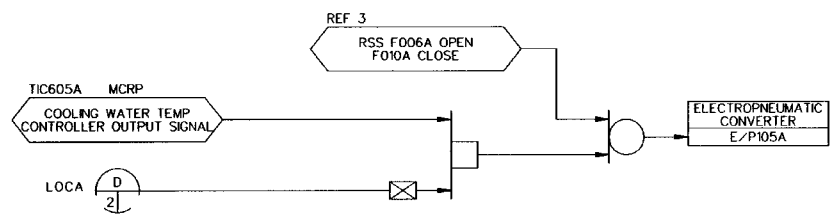

F006A: RCW SUPPLIED COOLING WATER TEMP CONTROL VALVE (HX SIDE) (A)

F010A: RCW SUPPLIED COOLING WATER TEMP CONTROL VALVE (HX BYPASS SIDE) (A)

RCW COOLING WATER TEMP CONTROL VALVE

CONTROL SWITCH

OBSERVATIONAL MEASURES		
USE	SPECIFICATION	LOCATION

ANNUNCIATOR		
NO.	INDICATOR	LOCATION

OTHERS			
INSTANT INTERRUPTION COUNTER MEAS		NEED	
		NOT NEED	
VALVE	INCHING OPERATION	NEED	
		NOT NEED	
	SEATING FORM	OPEN SIDE	
		CLOSED SIDE	
	THERMAL BYPASS	EXIST	
		NOT EXIST	
SWGR PWR SUPPLY OBSERVATION		EXIST	
		NOT EXIST	
ELECTRICAL SOL VLV PWR SUPPLY		AC V	
		DC V	

FIGURE 7.3-7 REACTOR BUILDING COOLING WATER/REACTOR SERVICE WATER SYSTEM IBD (Sheet 8 of 19)

21-247

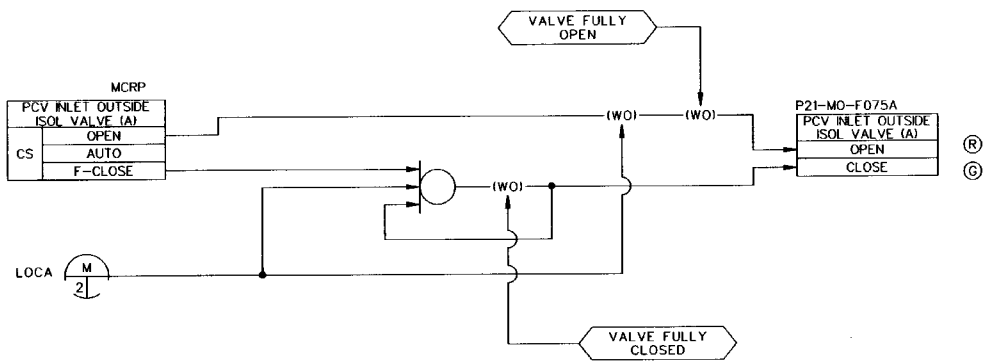

VALVE	VALVE NUMBER	SEATING FORM O-SIDE	SEATING FORM C-SIDE
PCV OUTLET OUTSIDE ISOLATION VALVE (A)	P21-MO-F081A	T	TL
PCV OUTLET INSIDE ISOLATION VALVE (A)	P21-MO-F080A	T	L(T)

PCV ISOLATION VALVE

CONTROL SWITCH

OBSERVATIONAL MEASURES

USE	SPECIFICATION	LOCATION
STATUS INDICATOR	G R	MCRP

ANNUNCIATOR

NO.	INDICATOR	LOCATION

OTHERS

INSTANT INTERRUPTION COUNTER MEAS		NEED	
		NOT NEED	
VALVE	INCHING OPERATION	NEED	
		NOT NEED	
	SEATING FORM	OPEN SIDE	T
		CLOSED SIDE	TL
	THERMAL BYPASS	EXIST	O
		NOT EXIST	
SWGR PWR SUPPLY OBSERVATION		EXIST	O
		NOT EXIST	
ELECTRICAL SOL VLV PWR SUPPLY		AC V	
		DC V	

FIGURE 7.3-7 REACTOR BUILDING COOLING WATER/REACTOR SERVICE WATER SYSTEM IBD (Sheet 9 of 19)

21-248

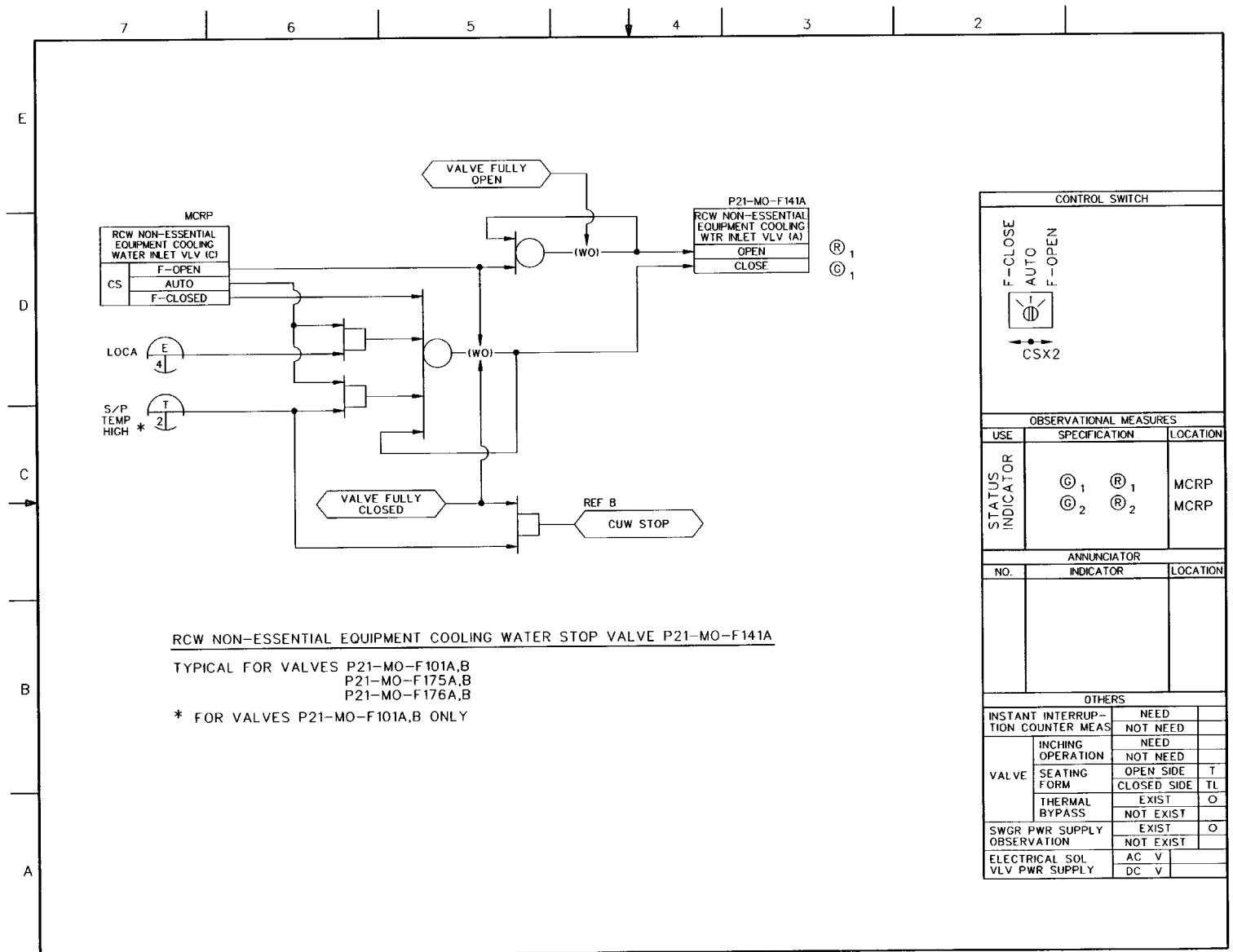

RCW NON-ESSENTIAL EQUIPMENT COOLING WATER STOP VALVE P21-MO-F141A

TYPICAL FOR VALVES P21-MO-F101A,B
P21-MO-F175A,B
P21-MO-F176A,B

* FOR VALVES P21-MO-F101A,B ONLY

FIGURE 7.3-7 REACTOR BUILDING COOLING WATER/REACTOR SERVICE WATER SYSTEM IBD (Sheet 10 of 19)

21-249

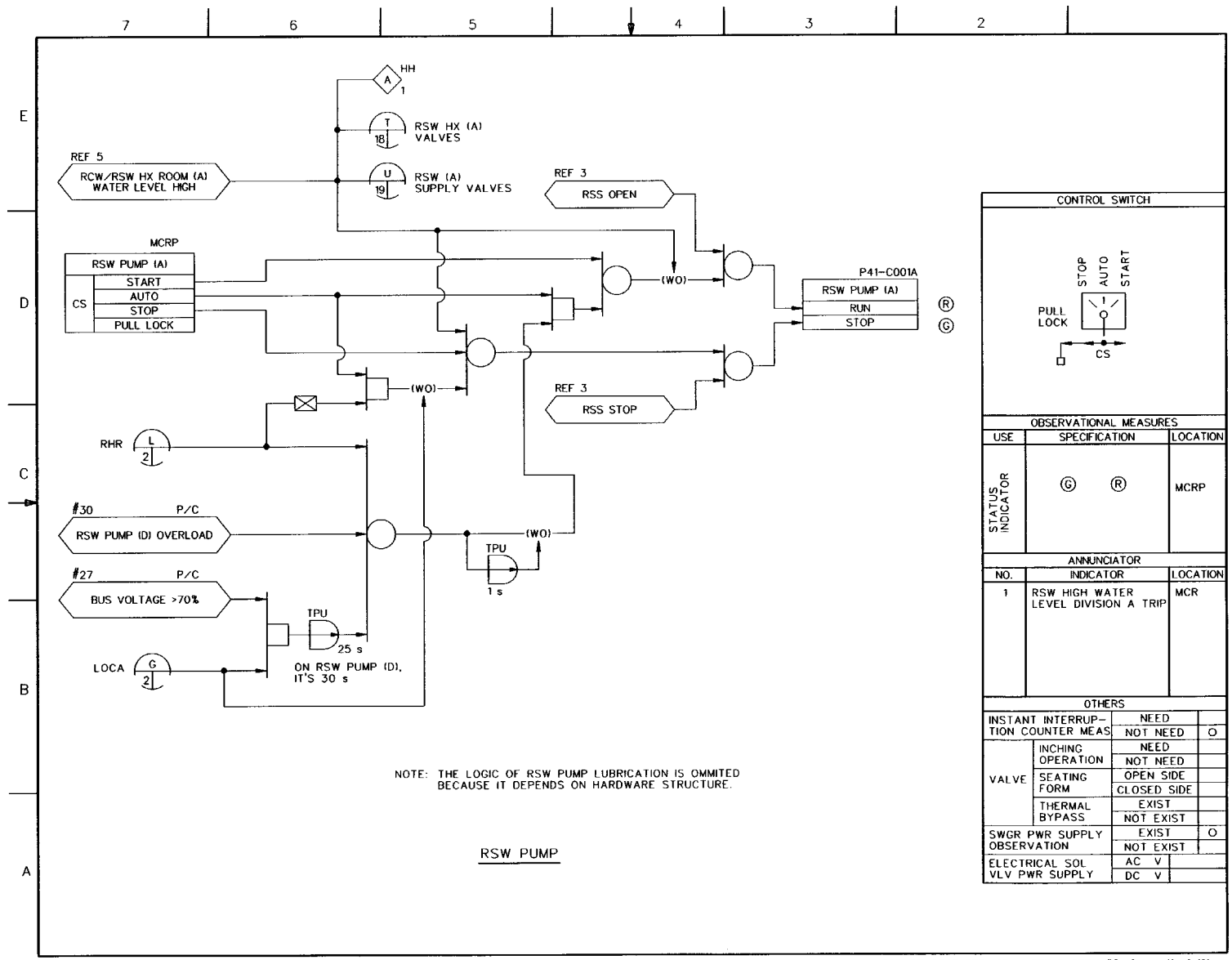

NOTE: THE LOGIC OF RSW PUMP LUBRICATION IS OMMITED BECAUSE IT DEPENDS ON HARDWARE STRUCTURE.

RSW PUMP

FIGURE 7.3-7 REACTOR BUILDING COOLING WATER/REACTOR SERVICE WATER SYSTEM IBD (Sheet 11 of 19)

21-250

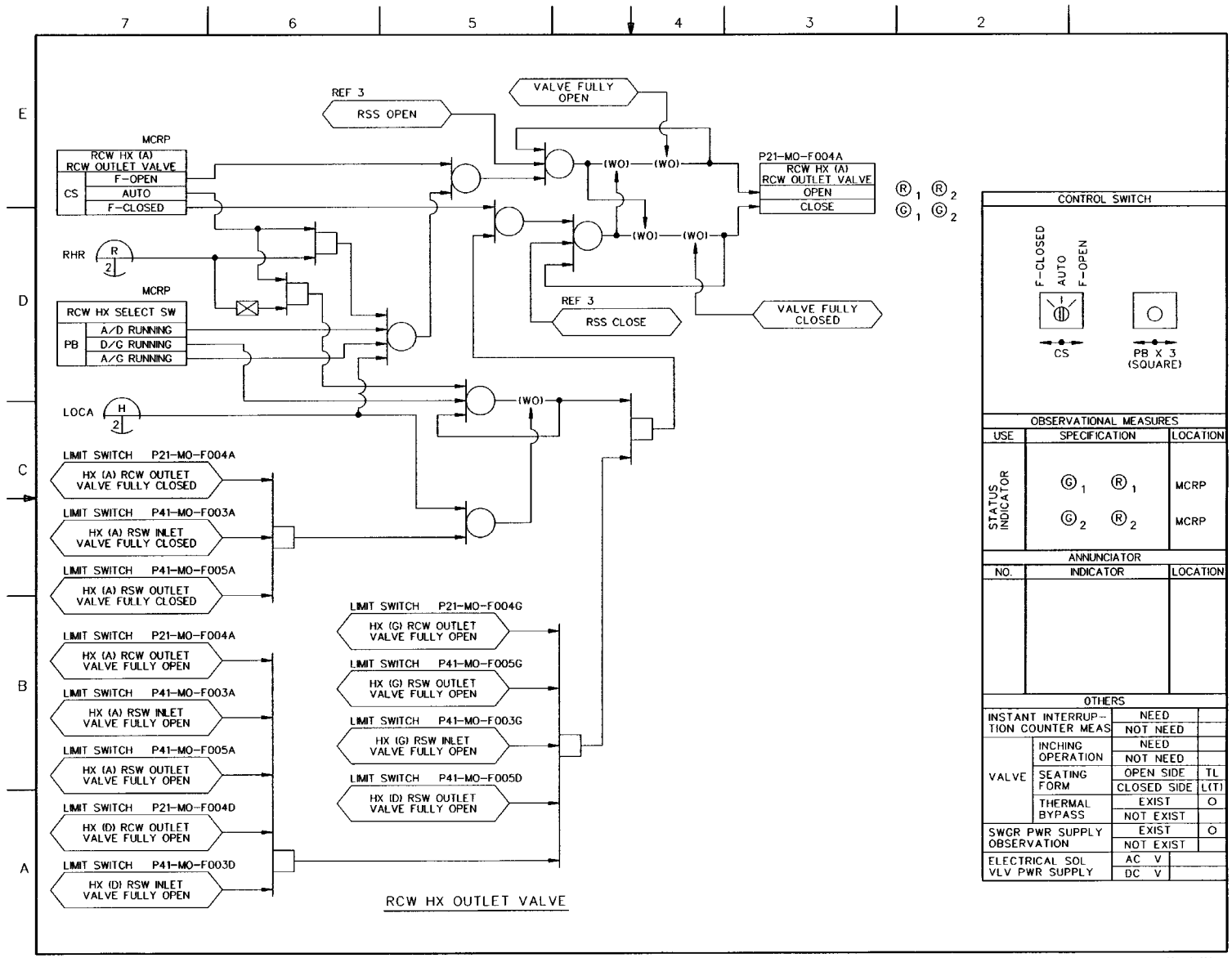

FIGURE 7.3-7 REACTOR BUILDING COOLING WATER/REACTOR SERVICE WATER SYSTEM IBD (Sheet 12 of 19)

21-251

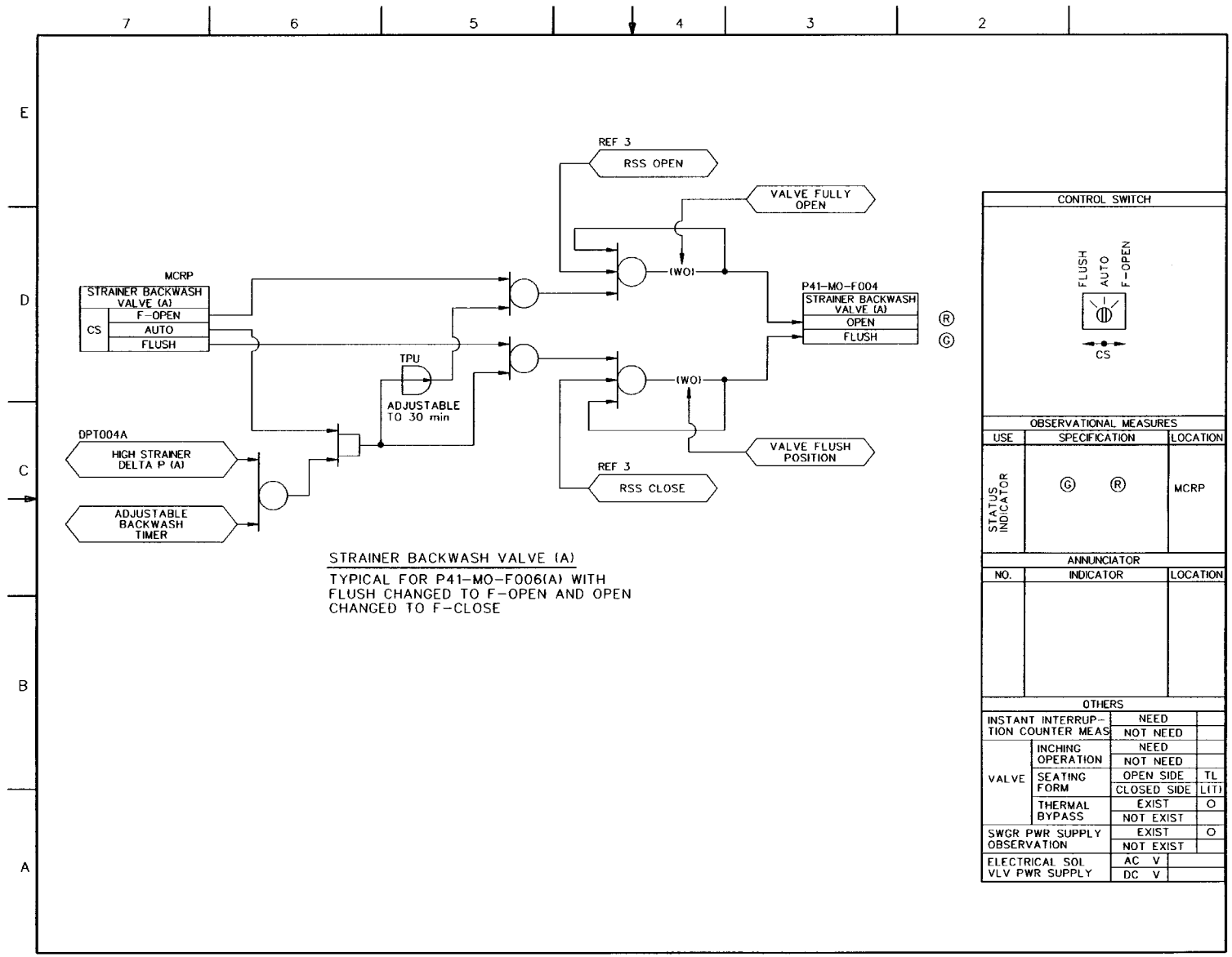

FIGURE 7.3-7 REACTOR BUILDING COOLING WATER/REACTOR SERVICE WATER SYSTEM (BD (Sheet 13 of 19)

21-252

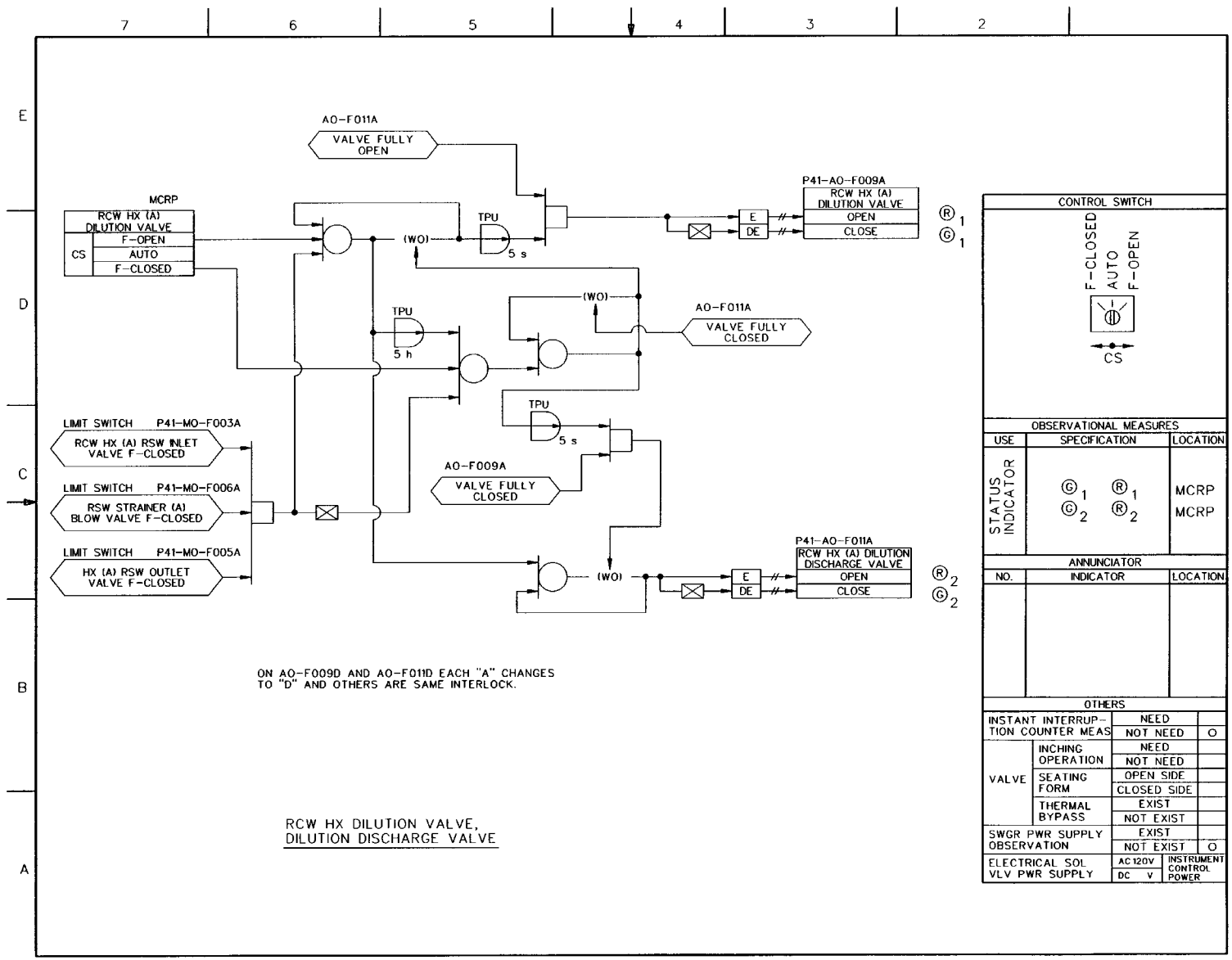

FIGURE 7.3-7 REACTOR BUILDING COOLING WATER/REACTOR SERVICE WATER SYSTEM IBD (Sheet 14 of 19)

21-253

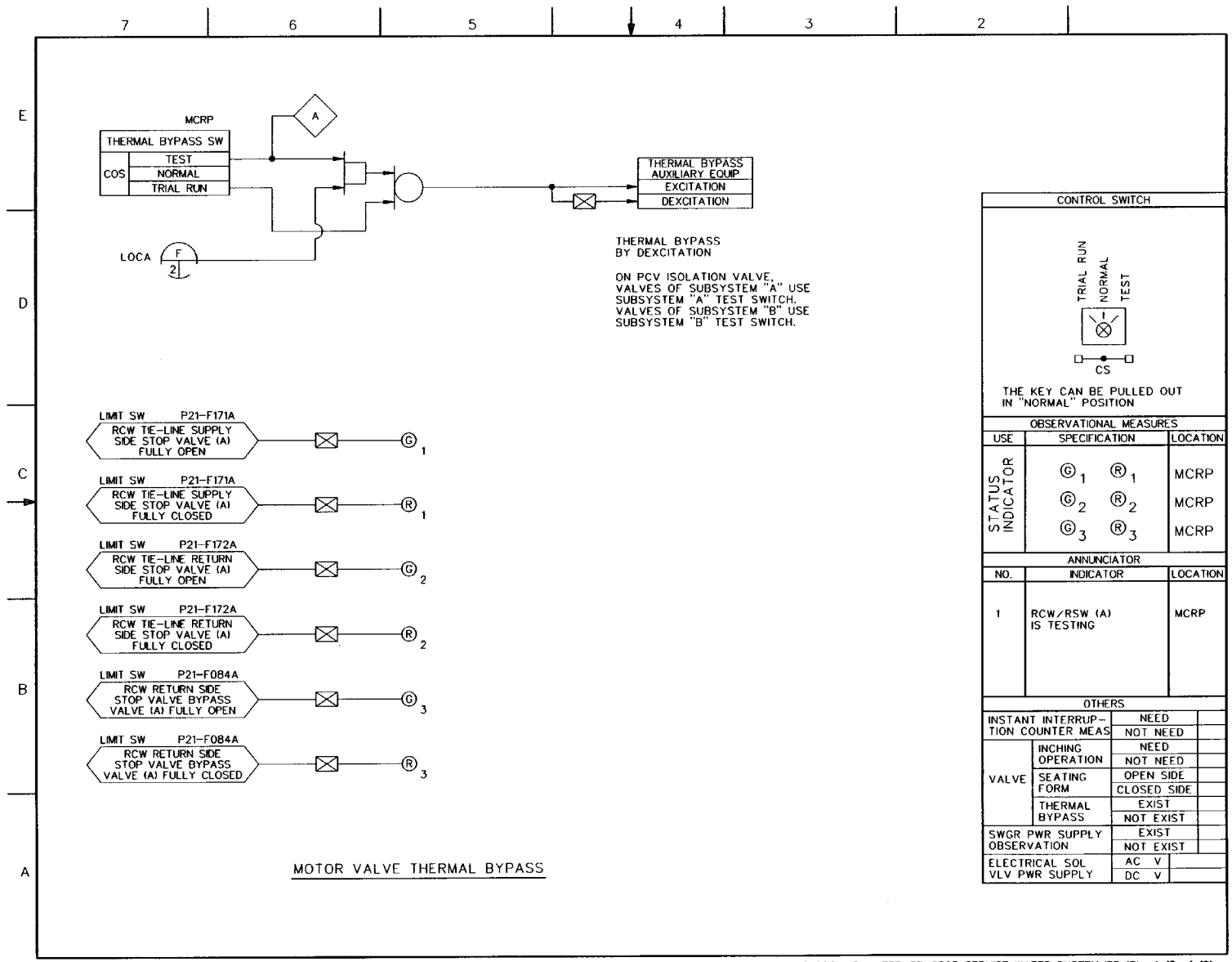

FIGURE 7.3-7 REACTOR BUILDING COOLING WATER/REACTOR SERVICE WATER SYSTEM IBD (Sheet 15 of 19)

21-254

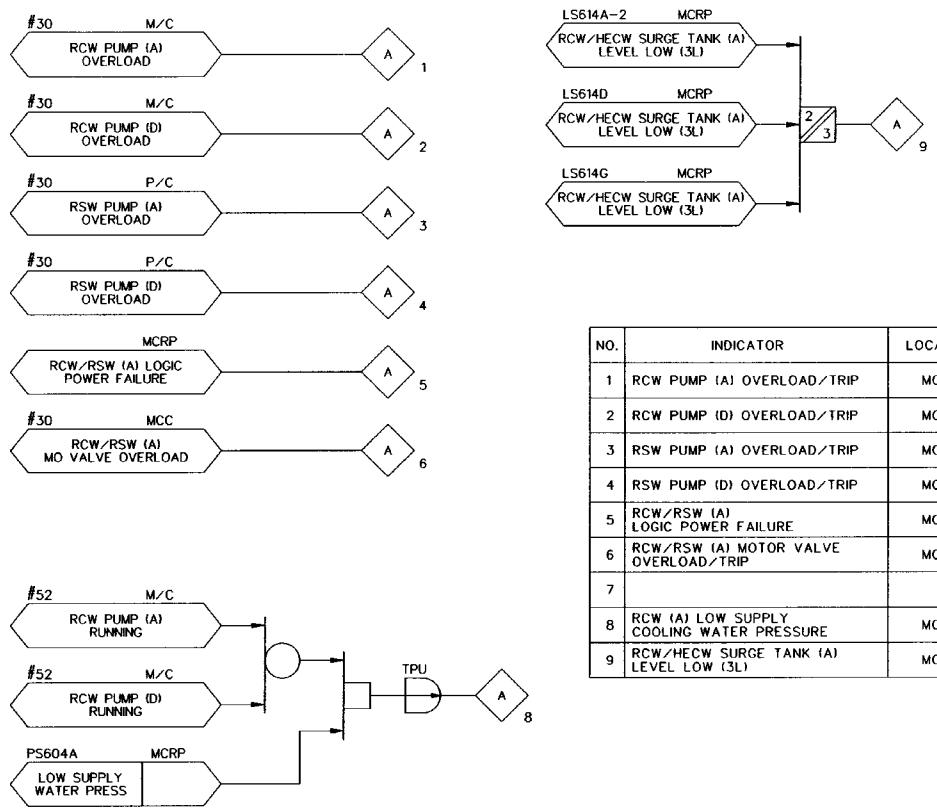

NO.	INDICATOR	LOCATION
1	RCW PUMP (A) OVERLOAD/TRIP	MCRP
2	RCW PUMP (D) OVERLOAD/TRIP	MCRP
3	RSW PUMP (A) OVERLOAD/TRIP	MCRP
4	RSW PUMP (D) OVERLOAD/TRIP	MCRP
5	RCW/RSW (A) LOGIC POWER FAILURE	MCRP
6	RCW/RSW (A) MOTOR VALVE OVERLOAD/TRIP	MCRP
7		
8	RCW (A) LOW SUPPLY COOLING WATER PRESSURE	MCRP
9	RCW/HECW SURGE TANK (A) LEVEL LOW (3L)	MCRP

ANNUNCIATOR (1)

CONTROL SWITCH

OBSERVATIONAL MEASURES		
USE	SPECIFICATION	LOCATION

ANNUNCIATOR		
NO.	INDICATOR	LOCATION

OTHERS			
INSTANT INTERRUPTION COUNTER MEAS		NEED	
		NOT NEED	
VALVE	INCHING OPERATION	NEED	
		NOT NEED	
	SEATING FORM	OPEN SIDE	
		CLOSED SIDE	
	THERMAL BYPASS	EXIST	
		NOT EXIST	
SWGR PWR SUPPLY OBSERVATION		EXIST	
		NOT EXIST	
ELECTRICAL SOL VLV PWR SUPPLY		AC V	
		DC V	

FIGURE 7.3-7 REACTOR BUILDING COOLING WATER/REACTOR SERVICE WATER SYSTEM IBD (Sheet 16 of 19)

21-255

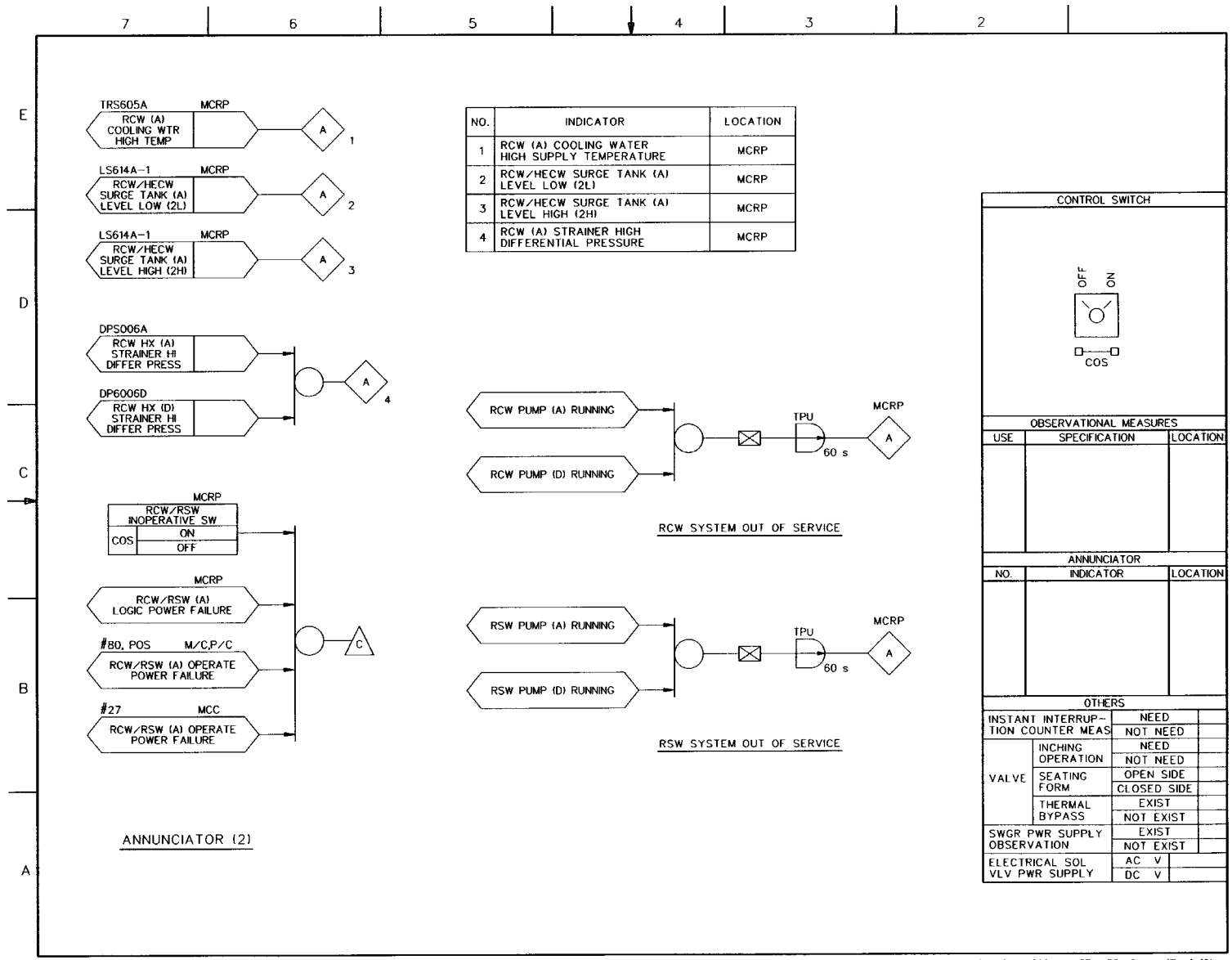

NO.	INDICATOR	LOCATION
1	RCW (A) COOLING WATER HIGH SUPPLY TEMPERATURE	MCRP
2	RCW/HECW SURGE TANK (A) LEVEL LOW (2L)	MCRP
3	RCW/HECW SURGE TANK (A) LEVEL HIGH (2H)	MCRP
4	RCW (A) STRAINER HIGH DIFFERENTIAL PRESSURE	MCRP

FIGURE 7.3-7 REACTOR BUILDING COOLING WATER/REACTOR SERVICE WATER SYSTEM (BD (Sheet 17 of 19)

21-256

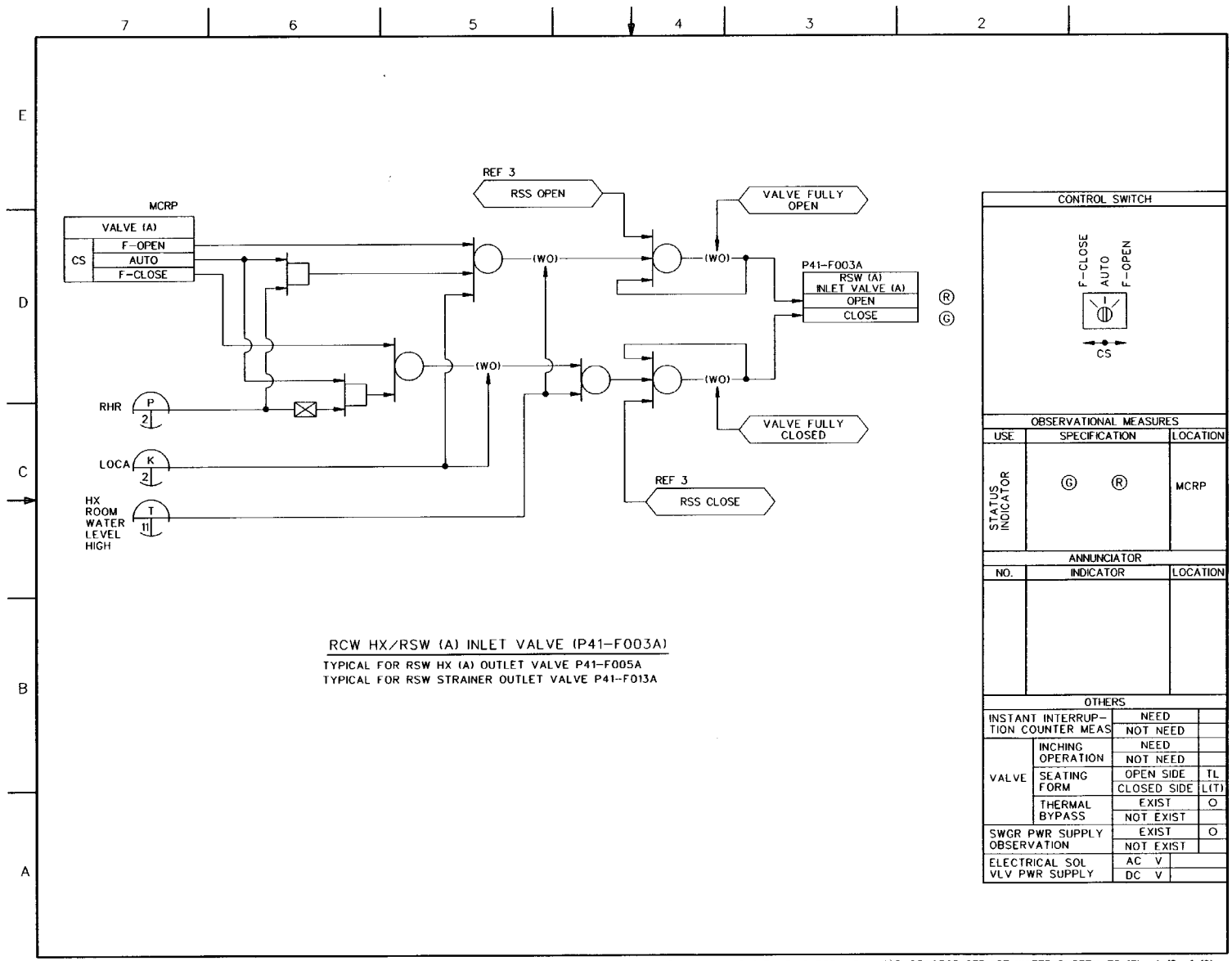

RCW HX/RSW (A) INLET VALVE (P41-F003A)

TYPICAL FOR RSW HX (A) OUTLET VALVE P41-F005A
TYPICAL FOR RSW STRAINER OUTLET VALVE P41-F013A

FIGURE 7.3-7 REACTOR BUILDING COOLING WATER/REACTOR SERVICE WATER SYSTEM IBD (Sheet 18 of 19)

21-257

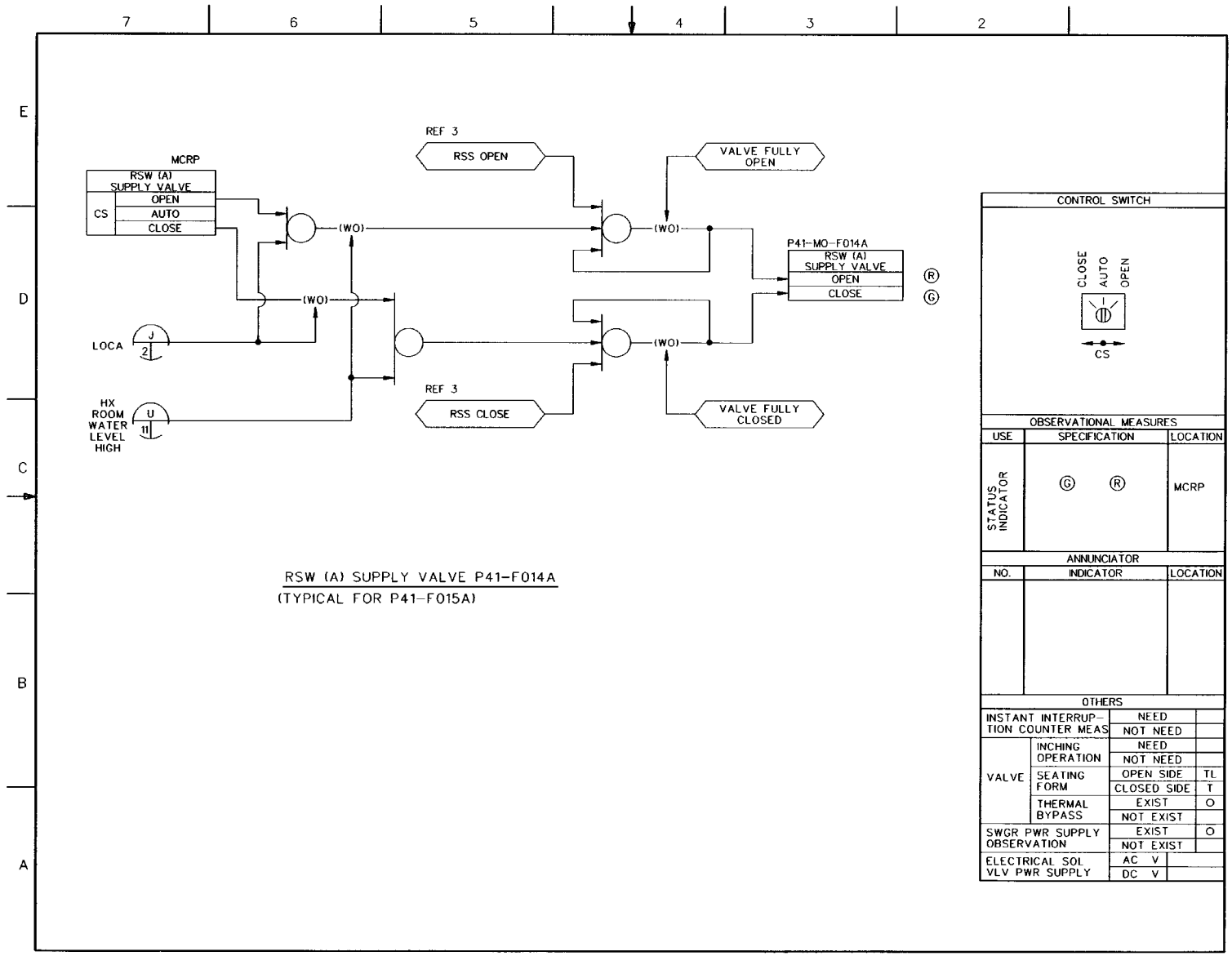

FIGURE 7.3-7 REACTOR BUILDING COOLING WATER/REACTOR SERVICE WATER SYSTEM IBD (Sheet 19 of 19)

21-258