HITACHI

GE Hitachi Nuclear Energy

25A5675BB
Revision 5
November 2010

ABWR
Design Control Document
Tier 2

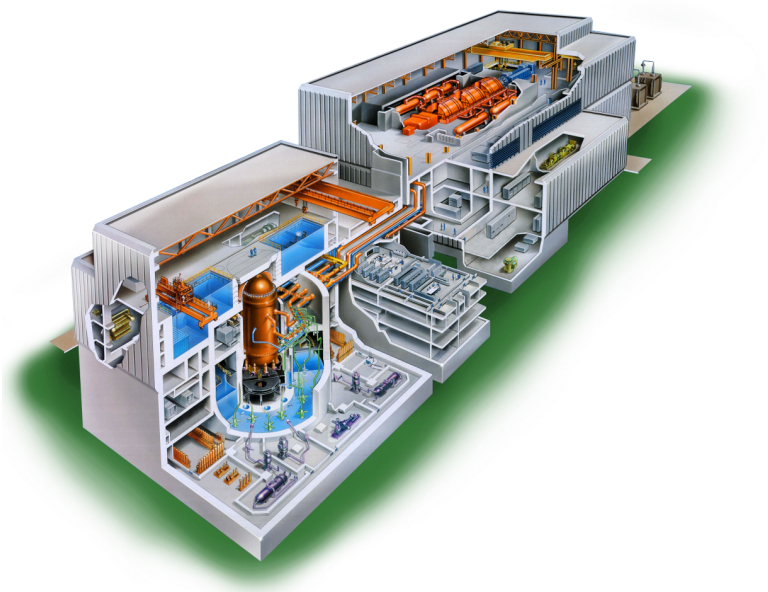

Chapter 21

Volume 1

Copyright 1994, 2010, GE-Hitachi Nuclear Energy Americas LLC
All Rights Reserved

Figure No.	Title	Page No.
	25A5675BB VOLUME 1	
1.2-2	Reactor Building, Arrangement Elevation, Section A-A	1
1.2-2a	Reactor Building, Arrangement Elevation, Section B-B	2
1.2-3	Upper Drywell, Arrangement Elevation, Section A-A	3
1.2-3a	Upper Drywell, Arrangement Elevation, section B-B	3
1.2-3b	Lower Drywell, Arrangement Elevation, section A-A	4
1.2-3c	Wetwell, Arrangement Elevation, Sections A-A & B-B	5
1.2-4	Reactor Building, Arrangement Plan at Elevation -8200 mm	6
1.2-5	Reactor Building, Arrangement Plan at Elevation -1700 mm	7
1.2-6	Reactor Building, Arrangement Plan at Elevation 4800/8500 mm	8
1.2-8	Reactor Building, Arrangement Plan at Elevation 12300 mm	9
1.2-9	Reactor Building, Arrangement Plan at Elevation 18100 mm	10
1.2-10	Reactor Building, Arrangement Plan at Elevation 23500 mm	11
1.2-11	Reactor Building, Arrangement Plan at Elevation 27200 mm	12
1.2-12	Reactor Building, Arrangement Plan at Elevation 31700/38200 mm	13
1.2-13a	Drywell, Arrangement Plan at Elevation 12300 mm	14
1.2-13b	Drywell, Arrangement Plan at Elevation 15600 mm	15
1.2-13c	Drywell, Arrangement Plan at Elevation 18100 mm	16
1.2-13d	Drywell Steel Structure at Elevation 18100 mm	17
1.2-13e	Lower Drywell, Arrangement Plan at Elevation -6600 to -1850 mm	18
1.2-13f	Lower Drywell, Arrangement Plan at Elevation -1850 to 1750 mm	19
1.2-13g	Lower Drywell, Arrangement Plan at Elevation 1750 to 4800 mm	20
1.2-13h	Lower Drywell, Arrangement Plan at Elevation 4800 to 6700 mm	21

Figure No.	Title	Page No.
1.2-13i	Wetwell, Arrangement Plan at Elevation -8200 mm	22
1.2-13j	Wetwell, Arrangement Plan at Elevation -1700 mm	23
1.2-13k	Wetwell, Arrangement Plan at Elevation 4800 mm	24
1.2-14	Control and Service Building, Arrangement Elevation, Section A-A	25
1.2-15	Control and Service Building, Arrangement Elevation, Section B-B	26
1.2-16	Control Building, Arrangement Plan at Elevation -8200 mm	27
1.2-17	Control and Service Building, Arrangement Plan at Elevation -2150 mm	28
1.2-18	Control and Service Building, Arrangement Plan at Elevation 3500 mm	29
1.2-19	Control and Service Building, Arrangement Plan at Elevation 7900 mm	30
1.2-20	Control and Service Building, Arrangement Plan al Elevation 12300 mm	31
1.2-21	Control and Service Building, Arrangement Plan at Elevation 17150 mm	32
1.2-22	Control and Service Building, Arrangement Plan at Elevation 22200 mm	33
1.2-23a	Radwaste Building at Elevation -1500 mm	33.1
1.2-23b	Radwaste Building at Elevation 4800 mm	33.2
1.2-23c	Radwaste Building at Elevation 12300 mm	33.3
1.2-23d	Radwaste Building at Elevation 21000 mm	33.4
1.2-23e	Radwaste Building, Section A-A	33.5
1.2-24	Turbine Building, General Arrangement at Elevation 5300 mm	34
1.2-25	Turbine Building, General Arrangement at Elevation 12300 mm	35
1.2-26	Turbine Building, General Arrangement at Elevation 20300 mm	36

Figure No.	Title	Page No.
1.2-27	Turbine Building, General Arrangement at Elevation 30300 mm	37
1.2-28	Turbine Building, General Arrangement, Longitudinal Section A-A	38
1.2-29	Turbine Building, General Arrangement, Section B-B	39
1.2-30	Turbine Building, General Arrangement, Section C-e	40
1.2-31	Turbine Building, General Arrangement, Section D-D	41
1.7-1	Piping and Instrumentation Diagram Symbols (shts. 1-2)	42
3H.1-28	Configuration of RPV Pedestal	44
3H.1-29	Rebar Arrangement of FIP Girder and Slab (112)	45
3H.1-30	Containment Structure Wall Reinforcement	46
3H.1-31	Containment Structure Opening Reinforcement	47
3H.1-32	Containment Structure Opening Reinforcement	48
3H.1-33	Containment Structure Top Slab Reinforcement	49
3H.1-34	Reactor Building Foundation Reinforcement (sh. 1)	50
3H.1-35	Reactor Building Foundation Reinforcement (sh. 2)	51
3H.1-36	Diaphragm Floor Reinforcement	52
3H.1-37	List of Seismic Wall Sections	53
3H.2-21	Control Building Floor Plan at Elevation -8200 mm	54
3H.2-22	Control Building Framing Plan at Elevation -2150 mm	55
3H.2-23	Control Building Framing Plan at Elevation 3500 mm	56
3H.2-24	Control Building Framing Plan at Elevation 7900 mm	57
3H.2-25	Control Building Framing Plan at Elevation 12300 and 13100 mm	58
3H.2-26	Control Building Framing Plan at Elevation 17150 and 18250 mm	59
3H.2-27	Control Building Framing Plan at Elevation 22200 and 22750 mm	60

Figure No.	Title	Page No.
3H.2-28	Control Building Section	61
3H.2-29	Control Building Section and Details	62
3H.2-30	Control Building Details	63
3H.3-11	Radwaste Building, Reinforced Concrete Basemat	64
3H.3-12	Radwaste Building, Structural Steel Framing Plan, Typical Floor	65
3H.3-13	Radwaste Building, Structural Steel Framing Plan, Elevation 28000 mm	66
3H.3-14	Radwaste Building, Section A-A	67
3H.3-15	Radwaste Building, Exterior Walls Sections	68
3H.3-16	Radwaste Building, Sections and Details	69
4.6-8	Control Rod Drive System P&ID (shts. 1-3)	70
4.6-9	Control Rod Drive System PFD	73
5.1-3	Nuclear Boiler System P&ID (shts. 1-11)	74
5.2-8	Leak Detection and Isolation System IED (shts. 1-10)	85
5.4-4	Reactor Recirculation System P&ID (shts. 1-2)	95
5.4-5	Reactor Recirculation System PFD	97
5.4-8	Reactor Core Isolation Cooling System P&ID (shts. 1-3)	98

Figure 1.2-2 REACTOR BUILDING, ARRANGEMENT ELEVATION, SECTION A-A

Contains Security-Related Information - Withheld Under 10 CFR 2.390

Figure 1.2-2a REACTOR BUILDING, ARRANGEMENT ELEVATION, SECTION B-B

Contains Security-Related Information - Withheld Under 10 CFR 2.390

Figure 1.2-3 UPPER DRYWELL, ARRANGEMENT ELEVATION, SECTION A-A

Figure 1.2-3a UPPER DRYWELL, ARRANGEMENT ELEVATION, SECTION B-B

Contains Security-Related Information - Withheld Under 10 CFR 2.390

Figure 1.2-3b LOWER DRYWELL, ARRANGEMENT ELEVATION, SECTION A-A

Contains Security-Related Information - Withheld Under 10 CFR 2.390

Figure 1.2-3c WETWELL, ARRANGEMENT ELEVATION SECTIONS A-A & B-B

Contains Security-Related Information - Withheld Under 10 CFR 2.390

FIGURE 1.2-4 REACTOR BUILDING, ARRANGEMENT PLAN AT ELEVATION -8200mm

Contains Security-Related Information - Withheld Under 10 CFR 2.390

FIGURE 1.2–5 REACTOR BUILDING, ARRANGEMENT PLAN AT ELEVATION –1700mm

Contains Security-Related Information - Withheld Under 10 CFR 2.390

FIGURE 1.2–6 REACTOR BUILDING, ARRANGEMENT PLAN AT ELEVATION 4800/8500mm

Contains Security-Related Information - Withheld Under 10 CFR 2.390

FIGURE 1.2–8 REACTOR BUILDING, ARRANGEMENT PLAN AT ELEVATION 12300mm

Contains Security-Related Information - Withheld Under 10 CFR 2.390

FIGURE 1.2–9 REACTOR BUILDING, ARRANGEMENT PLAN AT ELEVATION 18100mm

Contains Security-Related Information - Withheld Under 10 CFR 2.390

FIGURE 1.2–10 REACTOR BUILDING, ARRANGEMENT PLAN AT ELEVATION 23500mm

Contains Security-Related Information - Withheld Under 10 CFR 2.390

FIGURE 1.2–11 REACTOR BUILDING, ARRANGEMENT PLAN AT ELEVATION 27200mm

Contains Security-Related Information - Withheld Under 10 CFR 2.390

FIGURE 1.2–12 REACTOR BUILDING, ARRANGEMENT PLAN AT ELEVATION 31700/38200mm

Contains Security-Related Information - Withheld Under 10 CFR 2.390

Figure 1.2--13a DRYWELL, ARRANGEMENT PLAN AT ELEVATION 12,300mm

Contains Security-Related Information - Withheld Under 10 CFR 2.390

Figure 1.2–13b DRYWELL, ARRANGEMENT PLAN AT ELEVATION 15,600mm

Contains Security-Related Information - Withheld Under 10 CFR 2.390

Figure 1.2–13c DRYWELL, ARRANGEMENT PLAN AT ELEVATION 18,100mm

Contains Security-Related Information - Withheld Under 10 CFR 2.390

Figure 1.2-13d DRYWELL STEEL STRUCTURE AT EL. 18100 mm

Contains Security-Related Information - Withheld Under 10 CFR 2.390

Figure 1.2-13e LOWER DRYWELL, ARRANGEMENT PLAN AT EL. -6600 TO -1850 mm

Contains Security-Related Information - Withheld Under 10 CFR 2.390

Figure 1.2-13f LOWER DRYWELL, ARRANGEMENT PLAN AT EL. -1850 TO 1750 mm

Contains Security-Related Information - Withheld Under 10 CFR 2.390

Figure 1.2-13g LOWER DRYWELL, ARRANGEMENT PLAN AT ELEVATION 1750 TO 4800mm

Contains Security-Related Information - Withheld Under 10 CFR 2.390

Figure 1.2-13h LOWER DRYWELL, ARRANGEMENT PLAN AT ELEVATION 4800 TO 6700mm

Contains Security-Related Information - Withheld Under 10 CFR 2.390

Figure 1.2-13i WETWELL, ARRANGEMENT PLAN AT EL. -8200 mm

Contains Security-Related Information - Withheld Under 10 CFR 2.390

Figure 1.2-13j WETWELL, ARRANGEMENT PLAN AT EL. -1700 mm

Contains Security-Related Information - Withheld Under 10 CFR 2.390

Figure 1.2-13k WETWELL, ARRANGEMENT PLAN AT ELEVATION 4800mm

Contains Security-Related Information - Withheld Under 10 CFR 2.390

FIGURE 1.2-14 CONTROL AND SERVICE BUILDING, ARRANGEMENT ELEVATION, SECTION A-A

Contains Security-Related Information - Withheld Under 10 CFR 2.390

FIGURE 1.2-15 CONTROL, CB ANNEX, & SERVICE BUILDING, ARRANGEMENT ELEVATION, SECTION B-B

Contains Security-Related Information - Withheld Under 10 CFR 2.390

Figure 1.2-16 CONTROL BUILDING, ARRANGEMENT PLAN AT ELEVATION -8200 mm

Contains Security-Related Information - Withheld Under 10 CFR 2.390

Figure 1.2-17 CONTROL AND SERVICE BUILDING, ARRANGEMENT PLAN AT ELEVATION -2150mm

Contains Security-Related Information - Withheld Under 10 CFR 2.390

Figure 1.2-18 CONTROL AND SERVICE BUILDING, ARRANGEMENT PLAN AT ELEVATION 3500mm

Contains Security-Related Information - Withheld Under 10 CFR 2.390

Figure 1.2-19 CONTROL AND SERVICE BUILDING, ARRANGEMENT PLAN AT ELEVATION 7900mm

Contains Security-Related Information - Withheld Under 10 CFR 2.390

FIGURE 1.2–20 CONTROL, CB ANNEX, AND SERVICE BUILDING, ARRANGEMENT PLAN AT ELEVATION 12300 mm

Contains Security-Related Information - Withheld Under 10 CFR 2.390

FIGURE 1.2-21 CONTROL, CB ANNEX, AND SERVICE BUILDING, ARRANGEMENT PLAN AT ELEVATION 17150 mm

Contains Security-Related Information - Withheld Under 10 CFR 2.390

FIGURE 1.2–22 CONTROL, CB ANNEX, AND SERVICE BUILDING, ARRANGEMENT PLAN AT ELEVATION 22200 MM

Contains Security-Related Information - Withheld Under 10 CFR 2.390

112D4879\B001303

Figure 1.2–22 CONTROL AND SERVICE BUILDING, ARRANGEMENT PLAN AT ELEVATION 22200 mm

Contains Security-Related Information - Withheld Under 10 CFR 2.390

Figure 1.2-23a RADWASTE BUILDING AT ELEVATION -1500mm

Contains Security-Related Information - Withheld Under 10 CFR 2.390

Figure 1.2-23b RADWASTE BUILDING AT FLOOR ELEVATION 4800mm

FIGURE 1.2-23c RADWASTE BUILDING AT FLOOR ELEVATION 12300mm

Figure 1.2-23d RADWASTE BUILDING AT ELEVATION 21000mm

Figure 12-23a RADWASTE BUILDING, SECTION A-A
21-3115

Contains Security-Related Information - Withheld Under 10 CFR 2.390

Figure 1.2-24 TURBINE BUILDING, GENERAL ARRANGEMENT AT ELEVATION 5300mm
21-34

Figure 1.2-25 TURBINE BUILDING, GENERAL ARRANGEMENT AT ELEVATION 12,300mm

Contains Security-Related Information - Withheld Under 10 CFR 2.390

Figure 1.2-26 TURBINE BUILDING, GENERAL ARRANGEMENT AT ELEVATION 20300mm

21-36

Figure 1.2-27 TURBINE BUILDING, GENERAL ARRANGEMENT AT ELEVATION 30300mm

Contains Security-Related Information - Withheld Under 10 CFR 2.390

Figure 1.2-28 TURBINE BUILDING, GENERAL ARRANGEMENT, LONGITUDINAL SECTION A-A

Contains Security-Related Information - Withheld Under 10 CFR 2.390

Figure 1.2-29 TURBINE BUILDING, GENERAL ARRANGEMENT, SECTION B-B

Figure 1.2-30 TURBINE BUILDING, GENERAL ARRANGEMENT, SECTION C-C

21-40

Figure 1.2-31 TURBINE BUILDING, GENERAL ARRANGEMENT, SECTION D-D

Contains Security-Related Information - Withheld Under 10 CFR 2.390

VALVES AND VALVE ACTUATORS

(SEE NOTE 6)

- DOUBLE DISK GATE VALVE
- GATE VALVE
- GLOBE VALVE OR ANTICAVITATION VALVE
- GLOBE STOP CHECK VALVE
- SWING CHECK VALVE
- LIFT CHECK VALVE
- TESTABLE CHECK VALVE
- EXCESS FLOW CHECK VALVE
- BUTTERFLY VALVE
- PLUG OR BALL VALVE
- NEEDLE VALVE
- VB — VACUUM BREAKER
- THREE WAY VALVE — NEXT PORT OF OPENING; NEXT PORT OF CLOSURE
- THREE WAY VALVE — NEXT PORT OF OPENING
- EXPLOSIVE VALVE
- FOUR WAY VALVE
- ANGLE VALVE
- ANGLE STOP CHECK VALVE
- SAFETY OR RELIEF VALVE
- SAUNDERS TYPE VALVE
- GLAND LEAK OFF
- GLAND SEAL WATER
- BELLOWS SEAL
- EXTRACT STEAM CHECK VALVE
- SUPPLIED WITH ASSOCIATED EQUIPMENT
- MO FXXX — NOTE 5; MOTOR OPERATED NOTE 3
- HO FXXX — NOTE 5; HYDRAULIC OPERATED PISTON NOTE 3
- AO FXXX — NOTE 5; AIR OPERATED PISTON NOTE 3
- NO FXXX — NOTE 5; NITROGEN OPERATED NOTE 3
- UH FXXX — NOTE 5; UNI-HANDLER NOTE 3
- SOLENOID (NOTE 3
- MANUAL REMOTE NOTE 3
- DIAPHRAGM VALVE NOTE 3
- FLOAT VALVE NOTE 3
- (WITH POSITION) NOTE 3
- PCV FXXX — CONTROL VALVE (PRESSURE)
- MO FXXX FCV — CONTROL VALVE (FLOW)
- SELF CONTAINED CONTROL (CONNECTED TO PIPE)
- SELF CONTAINED CONTROL (CONNECTED TO VALVE)

SPECIALITIES

- THREADED CAP
- QUICK CONNECTION OR HOSE CONNECTION
- WELD CAP
- BLIND FLANGE
- SPECTACLE FLANGE
- IF — INSULATING FLANGE
- INCREASER, REDUCER
- EXPANSION JOINT
- FLANGE CONNECTION
- FLEXIBLE CONNECTION
- RUPTURE DISC
- SPOOL PIECE
- TRAP
- UNION CONNECTION
- BOUNDARY
- BASKET STRAINER (DOUBLE)
- BASKET STRAINER (SINGLE)
- CONE STRAINER
- PLATE STRAINER
- "Y" TYPE STRAINER
- FILTER
- EJECTOR
- EDUCTOR
- CONDENSING CHAMBER
- DRAIN FUNNEL
- X-000 — PRIMARY CONTAINMENT VESSEL PENETRATION (PENETRATION NUMBER TO BE SHOWN INSIDE BOX)

RW	MUW	SYSTEM
SS	CS	MATERIAL
1.50 MPa G	1.40 MPa G	MAXIMUM OPERATING (DESIGN) PRESSURE
60 °C	66 °C	MAXIMUM OPERATING (DESIGN) TEMPERATURE
3B(1A)	4D(3B)	DESIGN/QUALITY CLASS (CONSTRUCTION PERMIT BASE (DESIGN BASE)) NOTE 11
As	B(S1,S2)	SEISMIC CLASS (CONSTRUCTION PERMIT BASE (DESIGN BASE)) NOTE 11
(EXAMPLE)		

NOTES:

1. SYMBOLS DEFINED IN THIS DOCUMENT SHALL BE USED IN ALL P&ID'S.
2. ANY SYMBOL NOT DEFINED IN THE DOCUMENT IF USED, SHALL BE DESCRIBED NEXT TO THE SYMBOL IN THE P&ID OR A NOTE TO EXPLAIN THE SYMBOL SHALL BE ADDED IN THE P&ID.
3. SYMBOL SHOWS ACTUATOR ON A GATE VALVE FOR DEMONSTRATION PURPOSES ONLY. FOR APPLICATION OF THE ACTUATOR TO OTHER VALVE TYPES, REPLACE THE GATE VALVE SYMBOL WITH THE APPROPRIATE VALVE SYMBOL.
4. VALVE SYMBOL IN P&ID SHALL BE SHOWN IN ITS NORMAL CONDITION. FOR EXAMPLE NORMALLY OPEN IS REPRESENTED BY ⋈ AND NORMALLY CLOSED IS REPRESENTED BY ▶◀ .
5. VALVE NUMBER TO WHICH THE ACTUATOR BELONGS.
6. VALVE IDENTIFICATION AREA ON THE VALVE SYMBOL SHALL BE AS SHOWN.
7. LOCATION OF "PANEL NUMBER" FOR INSTRUMENTS IS ABOVE SYMBOL, POINT IDENTIFICATION (PID) NUMBER FOR COMPUTER INPUT IS BELOW SYMBOL. "H/L" DESCRIPTION FOR ANNUNCIATOR AND "O/C", "R/G" FOR INDICATION LIGHT IS AS INDICATED.
8. ANNUNCIATOR SETPOINT FOR THIRD OR MORE LOW OR HIGH ALARM SHALL BE SHOWN WITH A DIGIT AND AN ALPHABETICAL LETTER, EXAMPLE: "LOW LOW LOW=3L",HIGH HIGH HIGH HIGH=4H"
9. DELETED
10. (A). PIPING IDENTIFICATION SHALL FOLLOW THE FORMAT AS SHOWN.
    (B). IN THIS FORMAT, PIPE SCHEDULE, MATERIAL SPECIFICATION AND PROCESS FLUID MAY BE SUMMARIZED IN A NOTE ON P&ID AND MAY BE OMITTED FROM THE IDENTIFICATION. FOR EXAMPLE – WHEN THE PIPE SCHEDULE IS SUMMARIZED IN NOTE, THE FORMAT MAY BE SHORTENED TO 100A–FDW–102–CS–W.
    (C). SYSTEM ACRONYM (MPL NUMBER) SHALL BE PER TABLE 3.2–1 OF 23A6100.
    (D). PIPE NUMBERING SHALL BE DONE USING THE FLOW DIRECTION NUMBERING METHOD SAME AS EQUIPMENT NUMBERING DESCRIBED IN TABLE 1.7–5 OF 23A6100. SEE TABLE 1.7–5 FOR PIPE NUMBERING AND NUMBER SERIES ASSIGNED TO DIFFERENT CATAGORIES OF PIPE.
    (E). PIPE NUMBER SHALL CHANGE AT BOUNDARY SYMBOL (SEE SPECIALITIES ITEMS IN THIS DRAWING) ie: WHERE ANY OF THE PARAMETERS SHOWN AT THE BOUNDARY SYMBOL CHANGE.

NOTES CONTINUED ON SHEET 2

INSTRUMENTS

(SEE NOTE 7)

- LOCALLY MOUNTED INSTRUMENT
- LOCAL PANEL OR RACK MOUNTED INSTRUMENT
- MAIN CONTROL ROOM INSTRUMENT
- LOCALLY MOUNTED TRANSMITTER
- LOCAL PANEL OR RACK MOUNTED TRANSMITTER
- A — ANNUNCIATOR (H=HIGH, L=LOW HH=HIGH HIGH, LL=LOW LOW) NOTE 8
- C — PLANT COMPUTER INPUT SIGNAL
- INDICATION LIGHT: O – OPEN; C – CLOSED; R – RED; G – GREEN
- SOFTWARE FUNCTION
- FE — FLOW ELEMENT (ORIFICE TYPE)
- FE — FLOW ELEMENT (VENTURI AND FLOW NOZZLE TYPE)
- FG — SIGHT GLASS
- FI — IN-LINE FLOW INDICATOR
- FQ — FLOW METER (POSITIVE DISPLACEMENT)
- RO — RESTRICTING ORIFICE
- RO — BREAKDOWN ORIFICE
- SAMPLE COOLER
- SP — SAMPLE POINT
- SAMPLE PROBE
- RO — DRAG ORIFICE
- RE — IN-LINE RADIATION MONITOR

PIPING AND INSTRUMENT ELECTRICAL LINE

- PRIMARY PROCESS LINE
- AUXILIARY PROCESS LINE OR INSTRUMENT LINE
- PNEUMATIC SUPPLY LINE
- INSTRUMENT ELECTRICAL WIRING
- CAPILLARY TUBING
- HEAT TRACED LINE
- STEAM HEATED PIPE
- PIPING CONNECTING POINT
- PIPING NON-CONNECTING POINT
- BRANCH
- BRANCH
- LINE CONTINUATION
- LINE FROM OTHER SYSTEM

LINE CONTINUATION SYMBOLS

•CONTINUATION ON SAME DRAWING

"TO" = SH2, B-3

"FROM" = SH2, H-5

SHEET & ZONE NUMBER

•CONTINUATION ON REFERENCE DRAWING

"TO" = 8 SH2, B-3

REFERENCE NUMBER

SHEET & ZONE NUMBER (OPTIONAL)

"FROM" = SH2, H-5 8

REFERENCE NUMBER

- ELECTRICAL CONNECTING POINT
- ELECTRICAL NON-CONNECTING POINT

PIPING IDENTIFICATION

(NOTE 10)

ooo A-□□□-ooo-XXXXXX-XXX-□

- PIPE MATERIAL SPECIFICATION
- PIPE SCHEDULE
- FLUID — W=WATER, S=STEAM, A=AIR, N=NITROGEN
- PIPE NUMBER
- SYSTEM ACRONYM
- NOMINAL DIAMETER (IN mm)

EXAMPLE: 100A–FDW–102–CS–S80–W

MPL NO. A10–3030 3

FIGURE 1.7–1 PIPING AND INSTRUMENTATION DIAGRAM SYMBOLS (Sheet 1 of 2)

TABLE 1: INSTRUMENT LEGENDS

MEASURED VARIABLE \ FUNCTION		AMPLIFIER	CONTROLLER	FUNCTION GENERATOR	PRIMARY ELEMENT	INDICATOR	INDICATING CONTROLLER	INDICATING RECORDER	INDICATING SWITCH	INTEGRATOR	RECORDER	RECORDER SWITCH	SAMPLER	SIGHT GLASS	SWITCH	TEST POINT	TRANSMITTER	TELEMETER
		AM	C	F	E	I	IC	IR	IS	Q	R	RS	SM	G	S	X	T	TL
CONCENTRATION	CN				CNE	CNI												
CASING ELONGATION	SX				SXE	SXI					SXR				SXS		SXT	
DENSITY	D		DC		DE	DI			DIS		DR	DRS			DS	DX	DT	
DEW POINT	DW				DWE	DWI					DWR				DWS		DWT	
DIFFERENTIAL ELONGATION	DX	DXAM			DXE	DXI					DXR				DXS		DXT	
DIFFERENTIAL FLOW	DF					DFI			DFIS		DFR	DFRS			DFS		DFT	
DIFFERENTIAL PRESSURE	DP		DPC			DPI			DPIS		DPR	DPRS			DPS	DPX	DPT	
DIFFERENTIAL TEMPERATURE	DT		DTC			DTI			DTIS		DTR	DTRS			DTS		DTT	
ECCENTRICITY	E	EAM			EE	EI					ER						ET	
ELECTRICAL CONDUCTIVITY	C				CE	CI			CIS		CR		CSM		CS	CX	CT	
ELECTRICAL CURRENT	A					AI					AR						AT	ATL
ELECTRICAL FREQUENCY	HZ					HZI					HZR						HZT	HZTL
ELECTRICAL POWER	W					WI					WR						WT	WTL
ELECTRICAL POTENTIAL	V					VI					VR						VT	VTL
FLOW	F		FC	FF	FE	FI	FIC	FIR	FIS	FQ	FR	FRS		FG	FS	FX	FT	
HYDROGEN	H2				H2E	H2I		H2IR	H2IS		H2R	H2RS	H2SM		H2S		H2T	
HUMIDITY	M				ME	MI					MR						MT	
HYDROGEN ION DENSITY	PH	PHAM	PHC		PHE	PHI					PHR		PHSM			PHX		
LEVEL	L		LC		LE	LI			LIS		LR	LRS		LG	LS	LX	LT	
NEUTRON FLUX	N	NAM	NC		NE	NI				NQ	NR					NX	NT	
OXYGEN	O2		O2C		O2E	O2I		O2IR	O2IS		O2R	O2RS			O2S			
PRESSURE	P		PC		PE	PI			PIS		PR	PRS			PS	PX	PT	
POSITION	PO		POC		POE	POI			POIS		POR	PORS			POS		POT	
RADIATION	R				RE	RI			RIS	RQ	RR	RRS	RSM		RS	RX	RT	
REDUCTION OXIDATION POTENIAL DIFF	RO				ROE					ROQ	ROR				ROS		ROT	
SPEED OR ROTATION FREQUENCY	S	SAM	SC		SE	SI					SR				SS		ST	
SIGNAL MONITOR	OS														OSS			
SMOKE	SM				SME	SMI									SMS		SMT	
TEMPERATURE	T		TC		TE	TI			TIS		TR	TRS			TS	TX	TT	
TIME	TM		TMC			TMI			TMIS	TMQ		TMRS						
TORQUE	TQ				TQE						TQR				TQS		TQT	
TURBIDITY	TU				TUE	TUI					TUR				TUS		TUT	
VIBRATION	VB		VBC		VBE	VBI			VBIS		VBR				VBS		VBT	
VIBRATION PHASE ANGLE	PA				PAE	PAI					PAR						PAT	
VOLT-AMPERE REACTIVE POWER HOUR	QH					QHI					QHR						QHT	QHTL
VOLT-AMPERE REACTIVE POWER	Q					QI					QR						QT	QTL
WATT-HOUR	WH					WHI					WHR						WHT	WHTL
WEIGHT	WF		WFC		WFE	WFI					WFR				WFS			

ABBREVIATIONS

MATERIAL

CS – CARBON STEEL
SS – STAINLESS STEEL

SERVICE SUPPLY SOURCES

A/S – AIR SUPPLY
E/S – ELECTRICAL POWER SUPPLY
N_2/S– NITROGEN SUPPLY

FAILURE CONDITION

FAI – FAIL AS–IS
FO – OPEN ON AIR OR ELECTRICAL FAILURE
FC – CLOSE ON AIR OR ELECTRICAL FAILURE

VALVE CONDITION

LO – LOCKED OPEN
LC – LOCKED CLOSED
NO – NORMALLY OPEN
NC – NORMALLY CLOSED
NE – NORMALLY ENERGIZED
ND – NORMALLY DE–ENERGIZED

MISCELLEOUS

AC – ALTERNATING CURRENT
DC – DIRECT CURRENT

DRAINS

LCW – LOW CONDUCTIVITY WASTE
HCW – HIGH CONDUCTIVITY WASTE
SD – STORM DRAIN
NSD – NON–RADIOACTIVE STORM DRAIN
HSD – HOT SHOWER DRAIN

CONTROL VALVES

FCV – FLOW CONTROL VALVE
PCV – PRESSURE CONTROL VALVE
LCV – LEVEL CONTROL VALVE
TCV – TEMPERATURE CONTROL VALVE

PRESSURE UNIT

MPa – megapascal

NOTES (CONT)

11. DESIGN AND SAFETY CLASSIFICATION CORRELATION

BOUNDARY SYMBOL		REFERENCE TABLE 3.2–2 OF 23A6100	
DESIGN CLASS	QUALITY CLASS	SAFETY DESIGNATION	QUALITY GROUP
1	A	SC–1	A
2	B	SC–2	B
3	A	SC–2	B
	B	SC–2	B
4	A	SC–2	B
	C	SC–3	C
	D	NNS	C
	F	NNS	–
5	B	SC–2	B
6	D	NNS	D
	F	NNS	–
7	C	NNS	–
	D	NNS	–
	F	NNS	–
	G	NNS	–

SEISMIC DESIGN CLASSIFICATION CORRELATION

BOUNDARY SYMBOL	REFERENCE TABLE 3.2–2 OF 23A6100
SEISMIC CLASS	SEISMIC CATEGORY
As	I
A	I
B	I
C	NSC

NNS – NON NUCLEAR SAFETY
NSC – NON SEISMIC CATEGORY I

FIGURE 1.7–1 PIPING AND INSTRUMENTATION DIAGRAM SYMBOLS (Sheet 2 of 2)

Figure 3H.1-28 CONFIGURATION OF RPV PEDESTAL

21-44

Contains Security-Related Information - Withheld Under 10 CFR 2.390

Figure 3H.1-29 REBAR ARRANGEMENT OF F/P GIRDER AND SLAB (1/2)

Contains Security-Related Information - Withheld Under 10 CFR 2.390

Figure 3H.1-30 CONTAINMENT STRUCTURE WALL REINFORCEMENT

Contains Security-Related Information - Withheld Under 10 CFR 2.390

Figure 3H.1-31 CONTAINMENT STRUCTURE OPENING REINFORCEMENT

Contains Security-Related Information - Withheld Under 10 CFR 2.390

Figure 3H.1-32 CONTAINMENT STRUCTURE OPENING REINFORCEMENT

Contains Security-Related Information - Withheld Under 10 CFR 2.390

Figure 3H.1-33 CONTAINMENT STRUCTURE TOP SLAB REINFORCEMENT

Contains Security-Related Information - Withheld Under 10 CFR 2.390

Figure 3H.1-34 REACTOR BUILDING FOUNDATION REINFORCEMENT – SHEET 1

Contains Security-Related Information - Withheld Under 10 CFR 2.390

Figure 3H.1-35 REACTOR BUILDING FOUNDATION REINFORCEMENT – SHEET 2

Contains Security-Related Information - Withheld Under 10 CFR 2.390

Figure 3H.1-36 DIAPHRAGM FLOOR REINFORCEMENT

Contains Security-Related Information - Withheld Under 10 CFR 2.390

Figure 3H.1-37 LIST OF SEISMIC WALL SECTIONS

Contains Security-Related Information - Withheld Under 10 CFR 2.390

Contains Security-Related Information - Withheld Under 10 CFR 2.390

Figure 3H.2-21 CONTROL BUILDING-FLOOR PLAN AT ELEVATION TMSL - 8200mm

Figure 3H.2-22 CONTROL BUILDING-FRAMING PLAN AT ELEVATION TMSL -2150 mm

Contains Security-Related Information - Withheld Under 10 CFR 2.390

Figure 3H.2-23 CONTROL BUILDING-FRAMING PLAN AT ELEVATION TMSL 3500 mm

Contains Security-Related Information - Withheld Under 10 CFR 2.390

Figure 3H.2-24 CONTROL BUILDING-FRAMING PLAN AT ELEVATION TMSL 7900 mm

Contains Security-Related Information - Withheld Under 10 CFR 2.390

Figure 3H.2--25 CONTROL BUILDING--FRAMING PLAN AT ELEVATION TMSL 12300 AND 13100 mm

Contains Security-Related Information - Withheld Under 10 CFR 2.390

Figure 3H.2-26 CONTROL BUILDING–FRAMING PLAN AT ELEVATION TMSL 17150 AND 18250 mm

Contains Security-Related Information - Withheld Under 10 CFR 2.390

Figure 3H.2-27 CONTROL BUILDING-FRAMING PLAN AT ELEVATION TMSL 22200 AND 22750 mm

Contains Security-Related Information - Withheld Under 10 CFR 2.390

Figure 3H.2-28 CONTROL BUILDING-SECTION

Contains Security-Related Information - Withheld Under 10 CFR 2.390

Figure 3H.2-29 CONTROL BUILDING-SECTION AND DETAIL

Contains Security-Related Information - Withheld Under 10 CFR 2.390

Figure 3H.2-30 CONTROL BUILDING-DETAILS

Contains Security-Related Information - Withheld Under 10 CFR 2.390

Figure 3H.3-11 RADWASTE BUILDING-REINFORCED CONCRETE BASEMAT

Contains Security-Related Information - Withheld Under 10 CFR 2.390

Figure 3H.3-12 RADWASTE BUILDING-STRUCTURAL STEEL FRAMING PLAN-TYPICAL FLOOR

Contains Security-Related Information - Withheld Under 10 CFR 2.390

Figure 3H.3-13 RADWASTE BUILDING-STRUCTURAL STEEL FRAMING PLAN-ROOF EL 28000 mm
21-66

Contains Security-Related Information - Withheld Under 10 CFR 2.390

Figure 3H.3-14 RADWASTE BUILDING/CROSS-SECTION A-A

Contains Security-Related Information - Withheld Under 10 CFR 2.390

Figure 3H.3-15 RADWASTE BUILDING-EXTERIOR WALLS-SECTIONS

Contains Security-Related Information - Withheld Under 10 CFR 2.390

Figure 3H.3-16 RADWASTE BUILDING-SECTIONS AND DETAILS

Contains Security-Related Information - Withheld Under 10 CFR 2.390

NOTES

1. THE PIPING DESIGNER SHALL PROVIDE INSTRUMENT ROOT VALVES AND INSTRUMENT PIPING IN CONFORMANCE WITH THE REQUIREMENTS OF THE PROCESS INSTRUMENT SPECIFICATION A11-3030.
2. THE CRD SYSTEM HCU'S ARE ARRANGED IN FOUR SCRAM GROUPS LOCATED IN TWO MECHANICAL ZONES OF THE REACTOR BUILDING. EACH MECHANICAL ZONE CONTAINS TWO SCRAM GROUPS. EACH HCU SCRAM GROUP SERVES ONE QUADRANT OF THE REACTOR CORE.
3. PROVIDE DRAIN VALVES AT ALL SYSTEM LOW POINTS.
4. PROVIDE VENT VALVES AT ALL SYSTEM HIGH POINTS.
5. EXCEPT AT POINTS OF CONNECTION WITH THE REACTOR VENDOR SUPPLIED EQUIPMENT OR PIPING, THE PIPING DESIGNER SHALL SIZE PIPES IN CONFORMANCE WITH THE SYSTEM DESIGN SPECIFICATION AND PROCESS DIAGRAM.
6. THIS DOCUMENT PROVIDES A FUNCTIONAL DEFINITION OF THE REQUIRED SYSTEM LEVEL PROCESS MONITORING AND CONTROL INSTRUMENTATION. IT DOES NOT ADDRESS DETAILS OF THE METHODS BY WHICH SIGNALS FROM THESE COMPONENTS WILL BE PROCESSED. THIS PROCESSING MAY INVOLVE THE PLANT MULTIPLEXING SYSTEM (MDS) OR MAY UTILIZE DEDICATED HARDWARE.
7. CRD NITROGEN AND AIR LINES SHALL BE OF A NON-CORRODING MATERIAL.
8. MULTIPLE ORIFICES CONNECTED IN SERIES AS SHOWN IN PURCHASE PART DRAWING OF INVEST 0008. THE PRESSURE DROP ACROSS EACH ORIFICE IS 1.75 MPa AT PUMP RUN-OUT CONDITION. SEE COMPONENT DEVICE LIST FOR THE QUANTITIES OF ORIFICES.
9. PIPING QUALITY CLASS EXTENDS TO CONNECTIONS WITH HCU. HCU DIAGRAM IS SHOWN FOR INFORMATION ONLY. FOR QUALITY CLASS OF THE HCU, SEE GROUP CLASSIFICATION DIAGRAM, A11-1030.
10. FLUSHING CONNECTIONS SHALL BE PROVIDED IN ACCORDANCE WITH THE SPECIFICATION FOR CLEANING OF PIPE AND EQUIPMENT, A20-4010. TEMPORARY STRAINER SCREENS SHALL BE PROVIDED ON THE SUCTION SIDE OF ALL PUMPS IN ACCORDANCE WITH THE SPECIFICATION FOR FIELD CLEANING AND CLEANLINESS OF NUCLEAR PLANT COMPONENTS, A11-3070.
11. APPROPRIATE ELECTRICAL ISOLATION SHALL BE PROVIDED BETWEEN THE NON-ESSENTIAL ROD WITHDRAW BLOCK SIGNAL (PS-2811) AND THE ESSENTIAL REACTOR TRIP SIGNAL (PS-2811 AND PT-018).
12. PIPE SIZE SHALL BE SPECIFIED BY THE PIPING DESIGNER.
13. A PORTABLE NITROGEN CHARGING SYSTEM SHALL BE PROVIDED TO MEET THE REQUIREMENTS OF THE HCU. IT SHALL BE DESIGNED AND CONSTRUCTED IN ACCORDANCE WITH GOOD INDUSTRY PRACTICE AND SHALL HAVE THE APPROPRIATE SAFETY DEVICES, GAGES AND VALVES. A PRESSURE RELIEF VALVE SHALL BE INSTALLED DOWNSTREAM OF THE CHARGING STATION PRESSURE REGULATOR WHICH SHALL PREVENT PRESSURIZATION ABOVE SYSTEM REQUIREMENTS.
14. SOURCE OF CRD SYSTEM WATER SHALL BE NORMALLY FROM THE CONDENSATE, FEEDWATER AND CONDENSATE AIR EXTRACTION SYSTEM (M21). CONDENSATE STORAGE TANK IS THE ALTERNATE SOURCE IF CONDENSATE TREATMENT SYSTEM IS NOT IN OPERATION. FOR DETAILED DESIGN REQUIREMENT FOR SOURCE AND QUALITY OF WATER SEE CONTROL ROD DRIVE SYSTEM DESIGN SPEC. C12-4010. THE CRD SYSTEM INTERFACE CONFIGURATION WITH THE CONDENSATE/FEEDWATER AND CONDENSATE AIR EXTRACTION SYSTEM (C/F/M.A0) SHALL BE DETERMINED BY THE ACTUAL C/F/M.A0 DESIGN.
15. PROVISION FOR CONTAINMENT ISOLATION TO BE IN ACCORDANCE WITH CURRENT LICENSING REQUIREMENTS.
16. PRESSURE INDICATOR SHALL BE LOCATED ON A STRAIGHT PIPE SECTION TEN PIPE DIAMETERS FROM PUMP OUTLET.
17. ALL REFERENCED DESIGNATORS ARE PREFIXED BY C12- UNLESS OTHERWISE INDICATED.
18. FLANGED PUMPS TO BE USED.
19. THESE VALVES MUST BE OPEN FOR RAPID HYDRAULIC ROD INSERTION (SCRAM).
20. FOR SEISMIC CATEGORY OF INDIVIDUAL FMCRD COMPONENTS, SEE REFERENCE 12.
21. SYSTEM DESIGN CONDITIONS:
    A) DESIGN PRESSURE – SEE BOUNDARY SYMBOLS
    B) DESIGN TEMPERATURE – 88°C
    C) PIPING MATERIAL – SEE TABLE 1
    D) PIPING SCHEDULE NUMBER – SEE TABLE 1
    E) DESIGN/QUALITY CLASS – SEE BOUNDARY SYMBOLS
    F) SEISMIC CATEGORY – SEE BOUNDARY SYMBOLS
    G) FLUID – SEE TABLE 1
22. PIPING INTERFACES WITH THE CRD PUMP, INCLUDING SUCTION, DISCHARGE, VENT, DRAIN AND POSITIVE PRESSURE SEAL LINES SHALL BE SPECIFIED BY THE PUMP SUPPLIER. REDUCERS ON THE SUCTION AND DISCHARGE PIPING SHALL BE PROVIDED AS REQUIRED.
23. PIPE SIZE SHALL BE SPECIFIED BY THE PUMP SUPPLIER.
24. EACH SCRAM INSERT LINE SHALL BE ASSIGNED A SUFFIX NUMBER WHICH CORRESPONDS TO THE CORE LOCATION OF ITS ASSOCIATED FMCRD.
25. THE PIPING DESIGNER SHALL DETERMINE THE LOCATION OF THE LINE SIZE REDUCTION FOR THE CONNECTION WITH THE FMCRD. PIPE 50A-CRD-037 SHALL BE DELETED IF THE REDUCER IS AT THE FMCRD FLANGE.
26. FLOW SIGHT GLASS BOXES SHALL BE PROVIDED TO ALLOW VISUAL OBSERVATION OF LEAKAGE FROM INDIVIDUAL OR SMALL GROUPS OF FMCRDs. THE SPECIFIC NUMBER AND CONFIGURATION OF SIGHT GLASS BOXES SHALL BE DETERMINED BY THE PIPING DESIGNER BASED ON THE DESIGN OF THE UNDERVESSEL ARRANGEMENT.
27. THE FMCRD LEAK DETECTION INSTRUMENTATION AS SHOWN PROVIDES A FUNCTIONAL DEFINITION OF THE MINIMUM LEAK DETECTION MONITORING REQUIREMENTS. THE ACTUAL INSTRUMENTATION CONFIGURATION SHALL BE SPECIFIED BY THE DESIGNER BASED ON THE DETAILED FMCRD LEAK DETECTION SYSTEM ARRANGEMENT.
28. THE PIPING DESIGNER SHALL DETERMINE THE SPECIFIC CONFIGURATION OF DRAIN PIPING TO DELIVER FMCRD LEAKAGE FLOW TO LCW.
29. HCU ROOM CRD FRICTION TEST CONNECTIONS ARE USED IN CONJUNCTION WITH A PORTABLE TEST CART TO PROVIDE TEMPORARY HYDRAULIC CONNECTION TO THE HCU FOR CRD FRICTION TESTING.
30. THE ACTUAL HCU HEADER CONFIGURATION SHALL BE DETERMINED BY THE HCU ROOM PIPING LAYOUT DESIGN.
31. THE PIPING DESIGNER SHALL SPECIFY THE LOCATION OF MAINTENANCE VALVES, IF REQUIRED, FOR AIR VALVE AND AIR HEADER DUMP VALVE MAINTENANCE.
32. THE PIPING DESIGNER SHALL DETERMINE THE NEED FOR LINE SIZE REDUCTIONS FOR THE AIR HEADER DUMP VALVES AND AIR VALVES. THE REDUCERS MAY BE DELETED IF NOT REQUIRED.
33. THE VALVE POSITION INDICATING LIGHT SHALL BE LOCATED EITHER IN A LOCAL PANEL OR ON THE HCU.
34. THE PENETRATION NUMBERS FOR THE SCRAM LINES X-810 (AT 0°) AND X-70 (AT 180°).
35. THE INSTRUMENT AIR SUPPLY SHALL BE DESIGNED TO ASSURE CONTINUED AIR SUPPLY TO THE SCRAM AIR HEADER AND FLOW CONTROL VALVES (F010) WITH ANY SINGLE PRESSURE CONTROL VALVE OUT OF SERVICE.
36. PIPE WITH A DESIGN PRESSURE OF 2.82 MPa OR GREATER SHALL HAVE ITS MINIMUM WALL THICKNESS NO LESS THAN THAT OF A STANDARD WEIGHT PIPE. THICKER THAN STANDARD WEIGHT PIPE SHALL BE USED IF REQUIRED BY THE DESIGN PRESSURE OR OTHER REQUIREMENTS.
37. VALVES WITH A DESIGN PRESSURE OF 2.82 MPa OR GREATER SHALL BE A MINIMUM OF CLASS 300, OR OF A HIGHER CLASS IF REQUIRED BY THE DESIGN PRESSURE.

REFERENCE DOCUMENTS

	MPL NO.
1. REACTOR WATER CLEANUP SYS P&ID	G31-1010
2. REACTOR RECIRCULATION SYS P&ID	B31-1010
3. REACTOR BUILDING COOLING WATER SYS P&ID	P21-1010
4. MAKEUP WATER SYS (CONDENSED) P&ID	P13-1010
5. CONDENSATE, FEEDWATER AND CONDENSATE AIR EXTRACTION SYS P&ID	N21-1010
6. RECIRCULATION FLOW CONTROL SYS IBD	C81-1030
7. INSTRUMENT AIR SYS P&ID	P52-1010
8. REACTOR PROTECTION SYS IBD	C71-1030
9. ROD CONTROL AND INFORMATION SYS IBD	C11-1030
10. ROD CONTROL AND INFORMATION SYS IED	C11-1040
11. NUCLEAR BOILER SYS P&ID	B21-1010
12. PIPING AND INSTRUMENTATION DIAGRAM SYMBOLS	A10-3030

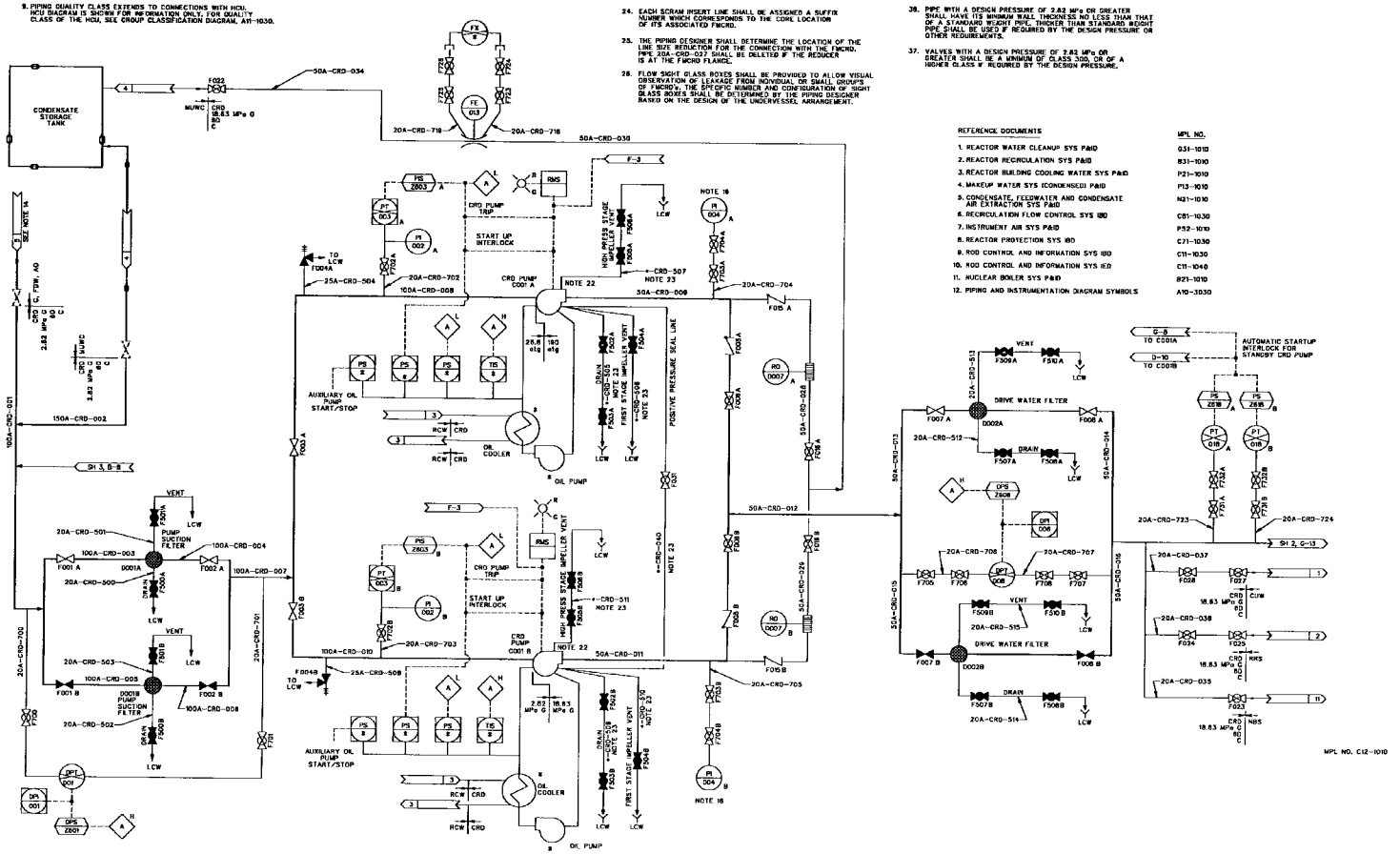

FIGURE 4.6-8 CONTROL ROD DRIVE SYSTEM P&ID (Sheet 1 of 3)

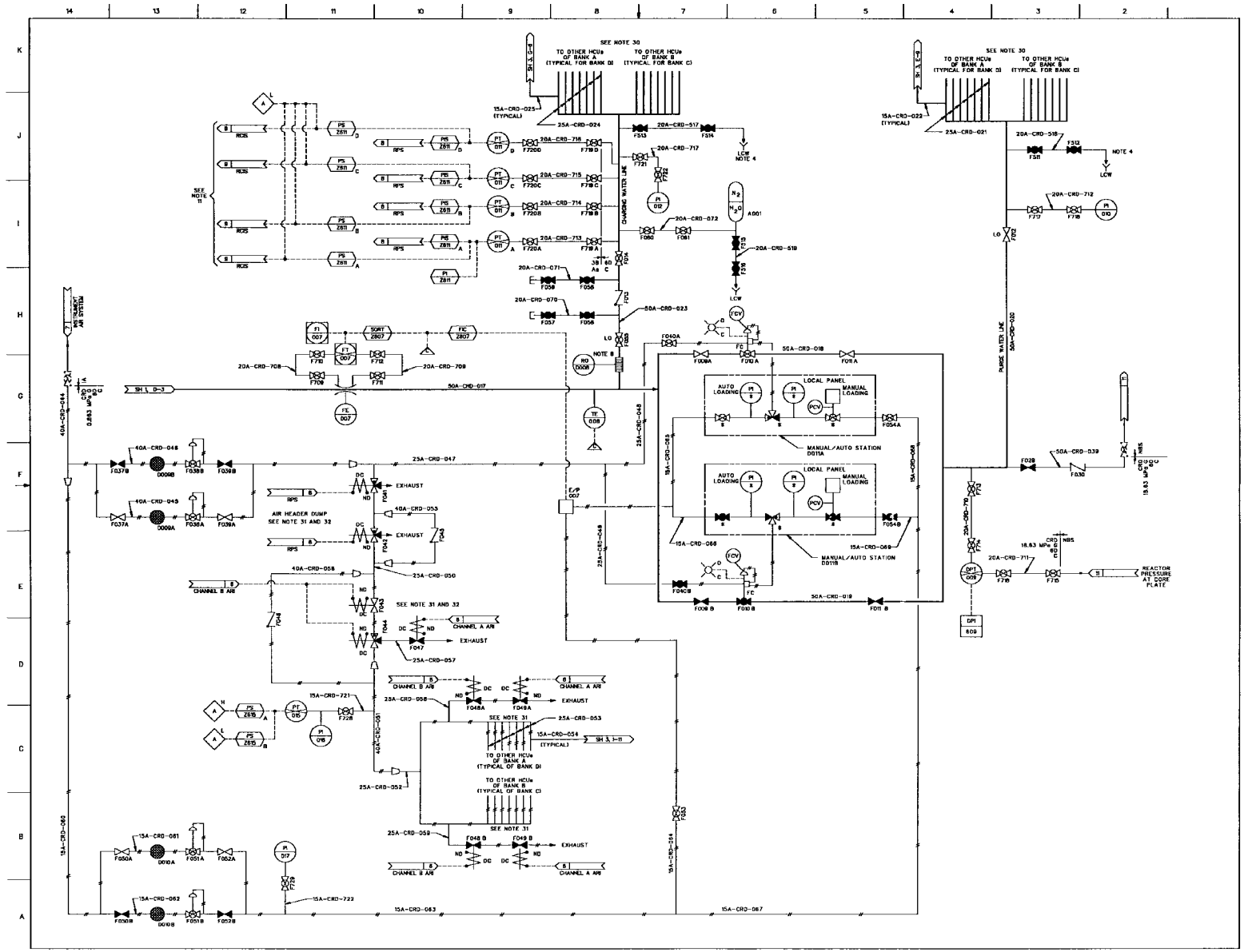

FIGURE 4.6-8 CONTROL ROD DRIVE SYSTEM P&ID (Sheet 2 of 3)

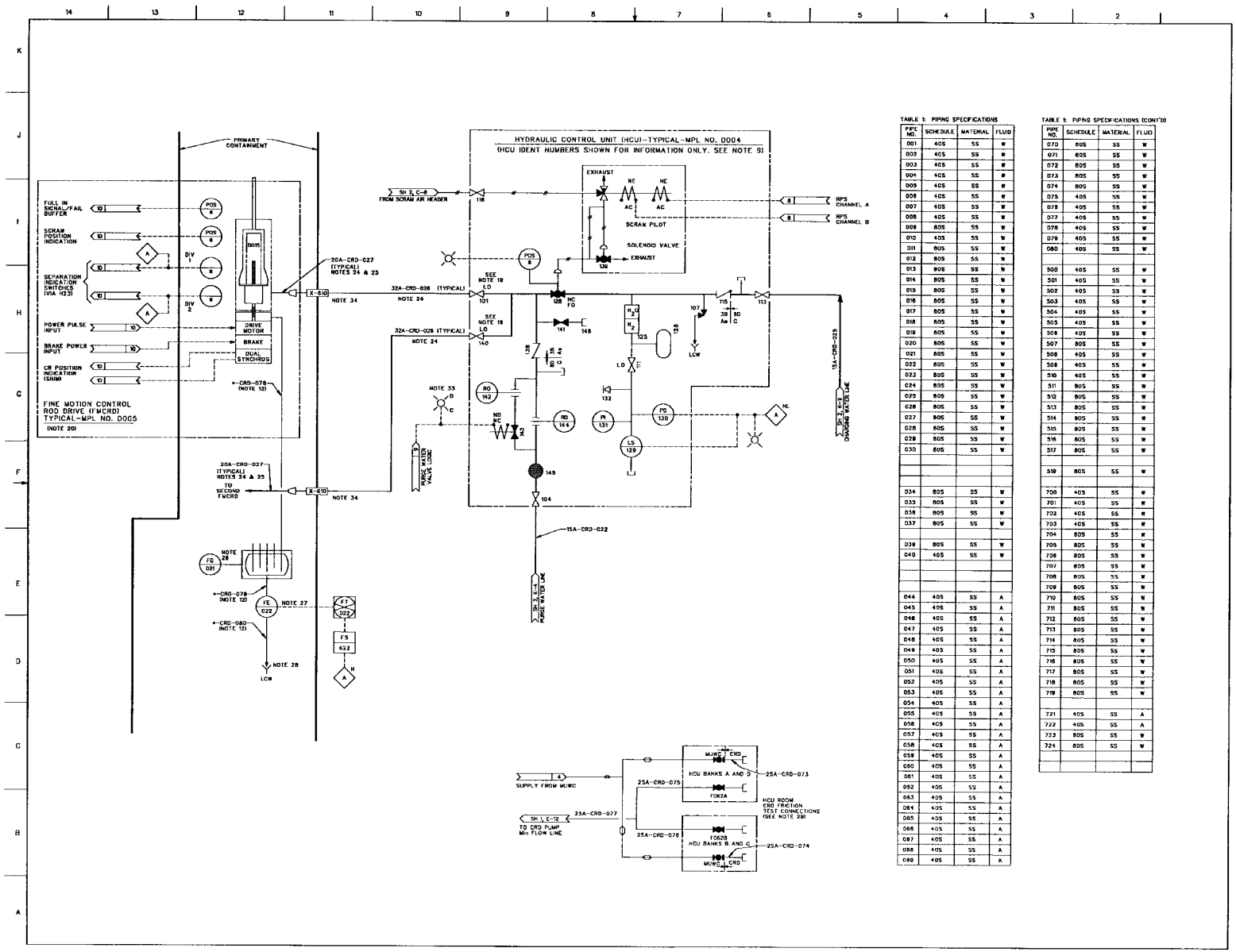

TABLE 1: PIPING SPECIFICATIONS

PIPE NO.	SCHEDULE	MATERIAL	FLUID
001	40S	SS	W
002	40S	SS	W
003	40S	SS	W
004	40S	SS	W
005	40S	SS	W
006	40S	SS	W
007	40S	SS	W
008	40S	SS	W
009	80S	SS	W
010	40S	SS	W
011	80S	SS	W
012	80S	SS	W
013	80S	SS	W
014	80S	SS	W
015	80S	SS	W
016	80S	SS	W
017	80S	SS	W
018	80S	SS	W
019	80S	SS	W
020	80S	SS	W
021	80S	SS	W
022	80S	SS	W
023	80S	SS	W
024	80S	SS	W
025	80S	SS	W
026	80S	SS	W
027	80S	SS	W
028	80S	SS	W
029	80S	SS	W
030	80S	SS	W
034	80S	SS	W
035	80S	SS	W
036	80S	SS	W
037	80S	SS	W
039	80S	SS	W
040	40S	SS	W
044	40S	SS	A
045	40S	SS	A
046	40S	SS	A
047	40S	SS	A
048	40S	SS	A
049	40S	SS	A
050	40S	SS	A
051	40S	SS	A
052	40S	SS	A
053	40S	SS	A
054	40S	SS	A
055	40S	SS	A
056	40S	SS	A
057	40S	SS	A
058	40S	SS	A
059	40S	SS	A
060	40S	SS	A
061	40S	SS	A
062	40S	SS	A
063	40S	SS	A
064	40S	SS	A
065	40S	SS	A
066	40S	SS	A
067	40S	SS	A
068	40S	SS	A
069	40S	SS	A

TABLE 1: PIPING SPECIFICATIONS (CONT'D)

PIPE NO.	SCHEDULE	MATERIAL	FLUID
070	80S	SS	W
071	80S	SS	W
072	80S	SS	W
073	80S	SS	W
074	80S	SS	W
075	40S	SS	W
076	40S	SS	W
077	40S	SS	W
078	40S	SS	W
079	40S	SS	W
080	40S	SS	W
500	40S	SS	W
501	40S	SS	W
502	40S	SS	W
503	40S	SS	W
504	40S	SS	W
505	40S	SS	W
506	40S	SS	W
507	80S	SS	W
508	40S	SS	W
509	40S	SS	W
510	40S	SS	W
511	80S	SS	W
512	80S	SS	W
513	80S	SS	W
514	80S	SS	W
515	80S	SS	W
516	80S	SS	W
517	80S	SS	W
518	80S	SS	W
700	40S	SS	W
701	40S	SS	W
702	40S	SS	W
703	40S	SS	W
704	80S	SS	W
705	80S	SS	W
706	80S	SS	W
707	80S	SS	W
708	80S	SS	W
709	80S	SS	W
710	80S	SS	W
711	80S	SS	W
712	80S	SS	W
713	80S	SS	W
714	80S	SS	W
715	80S	SS	W
716	80S	SS	W
717	80S	SS	W
718	80S	SS	W
719	80S	SS	W
721	40S	SS	A
722	40S	SS	A
723	80S	SS	W
724	80S	SS	W

FIGURE 4.6-8 CONTROL ROD DRIVE SYSTEM P&ID (Sheet 3 of 3)

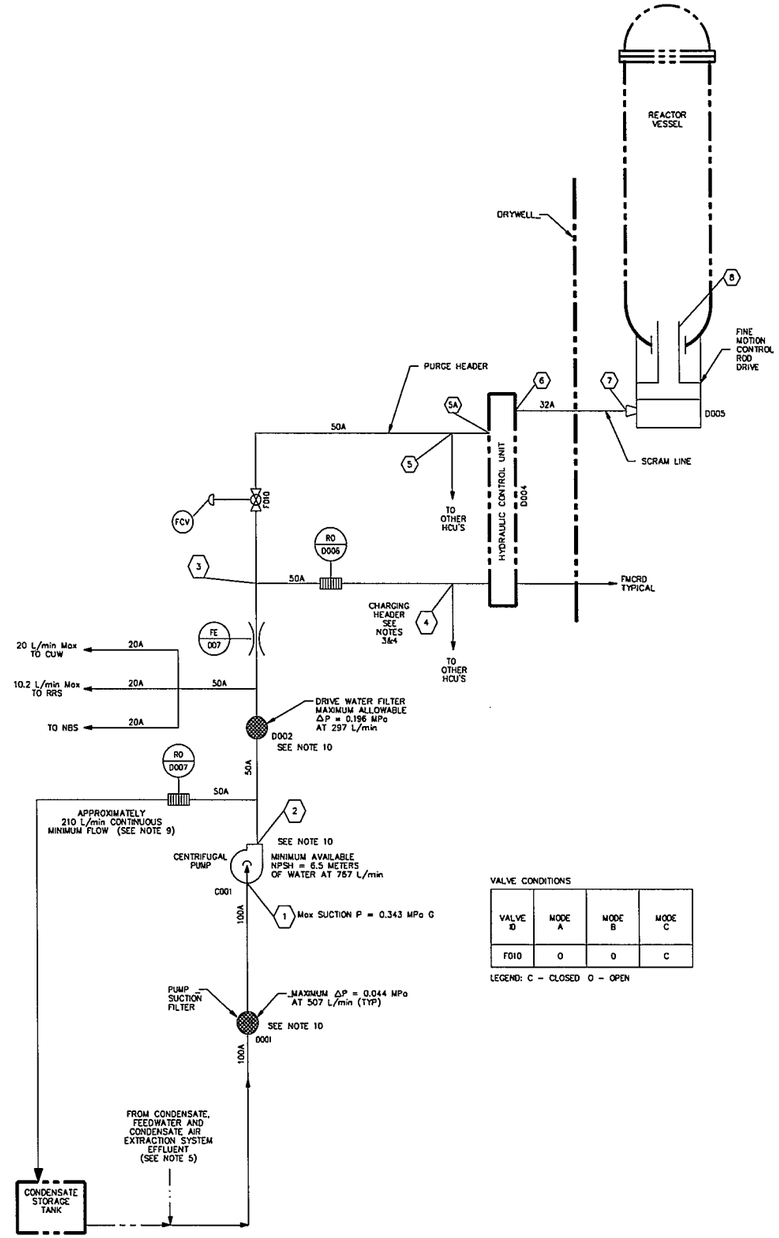

MODE A NORMAL OPERATION – SIZES PURGE WATER HEADERS (SEE NOTES 6 AND 7)

NODE ⬡	1	2	3	4	5	5A	6	7	8
FLOW, L/min	507	507	267	0	267	2.6	1.3 Max	1.3 Max	1.3 Max
PRESSURE, MPa G	0.343 (Max)	TDH = 15.30 (Min)			PR+0.245 (Min)	PR+0.245 (Min)	PR+0.196	PR+0.196	PR
CONDITIONS :		Max LINE LOSS 0.490				SEE NOTE 6 AND 7			

1. NORMAL DRIVE OPERATION
2. Min/Max PURGE FLOW TO DRIVES.
3. PRESSURE OF REACTOR AT 7.48 MPa G MEASURED AT VESSEL BOTTOM

MODE B SCRAM – SIZES SCRAM LINE

NODE ⬡	1	2	3	4	5	6	7	8
FLOW, L/min	240	240				473	473	473
PRESSURE, MPa G						0.716 Min 1.16 Max LINE LOSSES (SEE NOTE 8)		PR

CONDITIONS :

1. DRIVES SCRAMMING
2. FLOWS BASED ON ROD VELOCITY OF 344 cm/Sec
3. PRESSURE OF REACTOR AT 7.48 MPa G MEASURED AT VESSEL BOTTOM

MODE C SCRAM COMPLETED – SIZES THE PUMP SUCTION LINE

NODE ⬡	1	2	3	4	5	6	7	8
FLOW, L/min	767 Max	767 Max	527	527 Max	0	SEE NOTES 3&4		
PRESSURE, MPa G	TDH=11.77 Min					SEE NOTES 3&4		PR

CONDITIONS :

1. SCRAMMING OF DRIVES COMPLETED
2. MAXIMUM CRD SUPPLY PUMP FLOW
3. PRESSURE OF REACTOR (PR) AT 0 MPa G

TABLE 1: DESIGN PRESSURE/TEMPERATURE

NODE ⬡	1	2	3	4	5	6	7	8
PRESSURE, MPa G	2.82	18.63	18.63	18.63	18.63	23.5	23.5	23.5
TEMP \C	66	66	66	66	66	66	66	302

VALVE CONDITIONS

VALVE ID	MODE A	MODE B	MODE C
F010	O	O	C

LEGEND: C – CLOSED O – OPEN

NOTES :

1. DESIGN PRESSURE, TEMPERATURE AND LINE SIZE WILL BE FINALIZED AT THE DETAILED DESIGN PHASE. ACTUAL LINE SIZES DETERMINED BY PIPING DESIGNER SHALL MEET THE PROCESS DATA HYDRAULIC REQUIREMENTS.
2. THE TERM PR IS DEFINED AS THE REACTOR PRESSURE IMMEDIATELY ABOVE THE CORE PLATE.
3. PUMP RUNOUT CAPACITY OF 767 L/min SHALL NOT BE EXCEEDED. ORIFICE REDUCES THE PRESSURE AT THE INSERT LINE SO THAT NO GREATER THAN A TOTAL OF 527 L/min WILL LEAK THROUGH ALL THE DRIVES WHEN PR = 0 MPa G. LEAKAGE FLOW AT NODES (7) AND (8) IS EQUAL TO 527 DIVIDED BY NUMBER OF DRIVES.
4. RESTRICTING ORIFICE D006 IS COMPOSED OF MULTIPLE ORIFICES CONNECTED IN SERIES. SEE MPL FOR THE QUANTITIES OF ORIFICES. THE PRESSURE DROP EACH ORIFICE IS 1.73 MPa AT 767 L/min .
5. LINE FROM THE CONDENSATE, FEEDWATER AND CONDENSATE AIR EXTRACTION SYSTEM (N21) SHALL BE SIZED TO MAINTAIN A FLOW RATE APPROXIMATELY TWICE NORMAL (MODE A) CRD SYSTEM FLOW RATE. SURPLUS FLOW WILL BE DIVERTED TO CONDENSATE STORAGE TANK (CST). CST WILL PROVIDE AN ALTERNATE SOURCE OF WATER FOR THE CRD SYSTEM IF SYSTEM N21 IS NOT AVAILABLE.
6. IN MODE A, THE DRIVE PURGE FLOW RATE AT LOCATIONS 6 & 7 SHALL NOT BE LESS THAN 0.7 L/min TO ANY DRIVE WHILE ALL DRIVES ARE STATIONARY. THE PURGE FLOW RATE TO THE STATIONARY DRIVES IN MODE A MAY BE LESS THAN THIS LIMIT FOR BRIEF PERIODS OF TIME DURING GANG ROD MOVEMENTS AS DESCRIBED IN NOTE 7.
7. DURING NORMAL MOTOR-DRIVEN ROD INSERTIONS IN MODE A (EITHER SINGLE ROD OR GANGED ROD MOVEMENTS UP TO 26 RODS), THE PURGE WATER FLOW AT LOCATION 5A IS INCREASED TO A MINIMUM OF 8.2 L/min TO EACH HCU ASSOCIATED WITH A MOVING DRIVE. THIS IS ACCOMPLISHED BY AUTOMATIC OPENING OF THE PURGE WATER MAKE-UP VALVE IN THE HCU. THE FLOW FROM EACH HCU DIVIDES EVENLY BETWEEN THE TWO DRIVES SUCH THAT THE FLOW AT LOCATIONS 6 AND 7 IS 4.1 L/min. THE PURGE WATER FLOW TO THE STATIONARY DRIVES DECREASES SINCE THE TOTAL PURGE WATER HEADER FLOW RATE AT THE LOCATION 5 REMAINS CONSTANT.
8. LINE LOSSES ARE FOR THE SCRAM LINES ONLY. TOTAL COMBINED LOSSES FOR THE HCU AND SCRAM LINES ARE 1.67 MPa MINIMUM AND 2.11 MPa MAXIMUM.
9. ACTUAL FLOW WILL BE DETERMINED DURING THE DETAILED DESIGN PHASE.
10. TYPICAL OF BOTH LOOPS. ONLY ONE LOOP SHOWN.

C12-1020

103E1790\A887201

FIGURE 4.6-9 CONTROL ROD DRIVE SYSTEM PFD (Sheet 1 of 1)

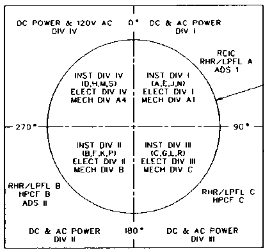

ORIENTATION OF THE NUCLEAR BOILER SYSTEM INSTRUMENTS TO MEET SEPARATION REQUIREMENTS (INCLUDES ASSOCIATED INSTRUMENT SUFFIX AND ECCS LOCATION)

NOTES

1. ENCLOSED EQUIPMENT AND COMPONENTS ARE TYPICAL FOR THE OTHER STEAMLINES AND HAVE THE SAME PART NUMBERS UNLESS OTHERWISE NOTED.
   EXAMPLE. XXXB IS ON LINE "B"
   EXAMPLE. XXXC IS ON LINE "C"

2. SEE REFERENCE DOCUMENT 40 FOR THE SIZE OF THE INLET FLANGE FOR THE SAFETY RELIEF VALVES (SRVS).

3. PIPE SIZES SHOWN ON THIS DRAWING ARE APPROXIMATE EXCEPT AT POINTS OF CONNECTION WITH THE SUPPLIED EQUIPMENT OR PIPING. THE PIPING DESIGNER SHALL CHECK AND ADJUST PIPING SIZE IN ACCORDANCE WITH HIS PIPING LAYOUT FOR CONFORMANCE WITH THE NUCLEAR BOILER SYSTEM DESIGN SPECIFICATION (B21-4010) AND PROCESS DIAGRAM (B21-1020).

4. THE GLOBE VALVE F707 MAY NOT BE PROVIDED IF A SHUTOFF VALVE IS SUPPLIED WITH THE LEVEL TRANSMITTER LT004. IF THE SECOND SHUT-OFF VALVE IS PART OF LT004, THE DESIGN PRESSURE FOR THIS INSTRUMENT LINE IS 8.62 MPa G ALL THE WAY TO LT004.

5. (PX) TO BE CONNECTED IN TO THE STRAIGHT RUN OF PIPE DOWNSTREAM OF F009 WITH UPSTREAM AND DOWNSTREAM STRAIGHT LENGTH FROM THE TAP TO GIVE AS ACCURATE A PRESSURE MEASUREMENT AS FEASIBLE. TAPS TO MEET ASME PTC 6 1964 "STEAM TURBINE" PARAGRAPH 4.74.

6. AN EXPANSION LEG SHALL BE PROVIDED IN THE INSTRUMENT LINE BETWEEN THE CONDENSING POT D011 AND THE WATER TIGHT PENETRATION IN THE REFUELING BELLOWS. THE EXPANSION LEG AND PIPING INSTALLATION SHALL BE DESIGNED TO ALLOW FOR THE MAXIMUM CHANGE OF VESSEL LENGTH WITH TEMPERATURE TO AVOID OVERSTRESSING THE PIPING OR THE SEAL OR DAMAGE TO THE INSULATION AROUND THE VESSEL. ELEVATION "A" SHALL BE AT OR ABOVE THE CENTERLINE OF THE RPV HEAD VENT LINE. THE INSTRUMENT LINE FROM ELEVATION "A" TO ELEVATION "B" SHALL BE SLOPED CONTINUOUSLY UPWARD ≥1/24 AND BE KEPT AS SHORT AS PRACTICAL. THE INSTRUMENT LINE SHALL BE KEPT INSULATED FROM THE CONNECTION WITH THE RPV HEAD VENT LINE TO THE CONDENSING POT. THE INSULATION SHALL HAVE A MAXIMUM CONDUCTANCE OF 4.103E-01 J/h.cm².°C.

7. PROVISIONS FOR INSTRUMENT LINE ISOLATION SHALL BE IN ACCORDANCE WITH SUPPORTING DOCUMENTS 3 & 4. ONE ORIFICE SHALL BE INSTALLED IN EACH INSTRUMENT LINE CONNECTED TO THE REACTOR COOLANT PRESSURE BOUNDARY (RCPB). ORIFICE SIZE IS 6.4mm AND MAXIMUM NUMBER OF ORIFICES PER LINE IS ONE.

8. VALVE MOTOR OPERATORS AND PILOT SOLENOIDS ARE AC OPERATED UNLESS OTHERWISE SPECIFIED.

9. THE CONDENSING CHAMBER SHALL BE CLOSE COUPLED TO THE 50A RPV INSTRUMENT LINE NOZZLE BY A 50A PIPE. THE 50A PIPE FROM THE REACTOR VESSEL INSTRUMENT LINE NOZZLE SHALL BE LEVEL IN THE HORIZONTAL PLANE FOR ALL CONDITIONS WITHIN 3 mm.
   THE INSTRUMENT LINE CONNECTED TO THE BOTTOM OF THE CONDENSING CHAMBER SHALL HAVE A DOWNWARD SLOPE ≥1/25. INSIDE THE PRIMARY CONTAINMENT, THE TOTAL VERTICAL DROP FROM THE CONDENSING CHAMBER TO THE CONTAINMENT WALL, SHALL NOT EXCEED 0.9 METERS. AT THE BOTTOM CONNECTION TO THE CONDENSING CHAMBER, THE INSTRUMENT LINE SHALL BE 25A PIPE, BUT PRIOR TO PENETRATING THE PRIMARY CONTAINMENT, SHALL BE REDUCED TO 20A PIPE.
   IN ADDITION, THE CONDENSING CHAMBER HAS A 25A DRAIN LINE WHICH DRAINS THE EXCESS CONDENSATE OR WATER TO THE VARIABLE LEG INSTRUMENT LINES FOR THE RPV WIDE RANGE WATER LEVEL INSTRUMENTATION.
   FLEXIBILITY SHALL BE PROVIDED IN THE INSTRUMENT LINE AND CONDENSING CHAMBER DRAIN LINE SUCH THAT THE CONDENSING CHAMBER IS FREE TO MOVE WITH THE REACTOR VESSEL AS IT THERMALLY EXPANDS AND CONTRACTS. THERMAL EXPANSION SHALL NOT CHANGE THE ELEVATION OF THE CONDENSING CHAMBER WITH RESPECT TO THE RPV INSTRUMENT LINE NOZZLE BY MORE THAN 3 mm.
   INSULATE THE 50A PIPE WHICH ATTACHES THE RPV INSTRUMENT LINE NOZZLE TO THE CONDENSING CHAMBER WITH INSULATION WHICH HAS A MAXIMUM CONDUCTANCE OF 4.103E-01 J/h.cm².°C. THE INSULATION SHALL EXTEND FROM THE RPV INSTRUMENT LINE NOZZLE TO THE CONDENSING CHAMBER. THE CONDENSING CHAMBER AND THE INSTRUMENT LINE FROM THE CONDENSING CHAMBER TO THE CONTAINMENT PENETRATION SHALL NOT BE INSULATED. THE 25A DRAIN LINE SHALL BE INSULATED.

10. LOCATE THE TEE AS CLOSE AS POSSIBLE TO REACTOR VESSEL.

11. THE MAXIMUM OPERATING PRESSURE OF AT LEAST 2.82 MPa G, AND TEMPERATURE FOR THE PORTION OF THE MAIN STEAM LINE DRAIN LINE HEADER DOWNSTREAM OF THE MOTOR OPERATED VALVES (MOVS) F014 AND F016 AND THE RESTRICTING ORIFICE D005 AND D007 TO BE DETERMINED BY THE DESIGNERS OF THE MAIN CONDENSER SYSTEM.

12. LOCATE THE DRAIN LINE 20A-NB-542 AND ASSOCIATED EQUIPMENT FOR DETECTING THE LEAKAGE AS CLOSE AS PRACTICAL TO THE RPV.

13. FOR DETAILS, SEE B11-D021 & D025.

14. THERMAL SLEEVE IS SHOWN AS ONE POSSIBLE METHOD OF ACCOMODATING ΔT BETWEEN RCIC/RHR/CUW AND FEEDWATER STREAMS. OTHER METHODS WHICH MEET APPLICABLE CODE REQUIREMENTS MAY BE USED.

15. SPRING CLOSING CHECK VALVE, SPRING ACTUATOR HELD IN OPEN POSITION BY AIR PRESSURE DURING NORMAL OPERATION. IF NO OTHER CHECK VALVE BETWEEN THE REACTOR AND THE FEEDWATER PUMPS IS DESIGNED TO CLOSE PRIOR TO APPRECIABLE FLOW REVERSAL, F003 SHOULD BE INTERLOCKED TO DUMP AIR PRESSURE AUTOMATICALLY IN THE EVENT ALL FEEDWATER PUMPS TRIP.

16. TRANSITION FROM 250A TO 300A PIPING TO BE DETERMINED BY THE PLANT ARRANGEMENT OF THE SRV DISCHARGE LINES.

17. SRV DISCHARGE LINE PIPING TO THE QUENCHER SHALL BE QUALITY GROUP C. IN ADDITION ALL WELDS IN THE SRV DISCHARGE LINE PIPING IN THE WETWELL ABOVE THE SURFACE OF THE SUPPRESSION POOL SHALL BE NON-DESTRUCTIVELY EXAMINED TO THE REQUIREMENTS OF ASME BOILER AND PRESSURE VESSEL CODE, SECTION III, CLASS 2.

18. NOT USED

19. WHEN ALL FEEDWATER FLOW IS THROUGH A LOW FLOW FEEDWATER CONTROL VALVE, ONE FEEDWATER LINE TO THE REACTOR VESSEL IS TO BE SHUT-OFF TO MINIMIZE THERMAL CYCLING OF THE FEEDWATER NOZZLES ON THE RPV. WITH BOTH FEEDWATER LINES OPEN, FLOW MAY OSCILLATE BETWEEN THE TWO LINES DUE TO THE PARTIALLY OPEN CHECK VALVE.

20. ROUTE THE PIPE THROUGH THE MANHOLE IN BETWEEN THE DRYWELL AND THE RPV FLANGE

21. WATER LEVEL INSTRUMENTS FOR VARIOUS RANGES ARE CALIBRATED AS STATED BELOW. ALL WATER LEVEL SWITCH SETPOINTS ARE NOMINAL. I.E...THE ANALYSES ARE PERFORMED WITH THE SWITCH TRIP UNCERTAINTY INCLUDED. THE CONTAINMENT BUILDING TEMPERATURE ASSUMED TO BE 26.7°C.
   A. FUEL ZONE: THE INSTRUMENTS ARE CALIBRATED FOR SATURATED WATER AND STEAM CONDITIONS AT 0 kPa G IN THE VESSEL AND DRYWELL WITH NO PUMP FLOW.
   B. WIDE RANGE: THE INSTRUMENTS ARE CALIBRATED FOR 7.07 MPa G IN THE VESSEL, 57.2°C IN THE DRYWELL AND 46.47 kJ/kg SUB-COOLING BELOW THE MIDDLE WATER LEVEL NOZZLE.
   C. NARROW RANGE: (SAFEGUARDS AND FEEDWATER) THE INSTRUMENTS ARE CALIBRATED FOR SATURATED WATER AND STEAM CONDITIONS AT 7.07 MPa G IN THE VESSEL AND 57.2°C IN THE DRYWELL.
   D. SHUTDOWN: THE INSTRUMENT IS CALIBRATED FOR 48.9°C WATER AT 0 MPa IN THE VESSEL AND 26.7°C IN THE DRYWELL.

22. THE TEMPERATURE ELEMENT MPL B21-TE032 MAY BE LOCATED ON THE RPV HEAD VENT LINE BETWEEN THE MOTOR-OPERATED VALVES MPL B21-F019 AND B21-F020 PROVIDING THE FOLLOWING CONDITION IS SATISFIED. THE TEMPERATURE ELEMENT MPL B21-TE032 SHALL NOT BE INFLUENCED BY THE POTENTIALLY HIGH TEMPERATURES UPSTREAM OF THE MOTOR-OPERATED VALVE MPL B21-F019 WHEN THERE IS ZERO LEAKAGE THROUGH THE MOTOR-OPERATED VALVES B21-F019 & B21-F020

23. UNLESS OTHERWISE INDICATED, ALL REFERENCED MPL ARE PREFIXED BY B21-

24. SEE MAIN STEAM PIPING DESIGN SPECIFICATION (B21-G001) FOR THE SPECIAL DESIGN REQUIREMENTS WHICH ARE APPLICABLE TO THE PIPING BETWEEN THE STEAM LINE INBOARD AND OUTBOARD CONTAINMENT ISOLATION VALVES

25. SEE FEEDWATER PIPING DESIGN SPECIFICATION (B21-G010) FOR THE SPECIAL DESIGN REQUIREMENTS WHICH ARE APPLICABLE TO THE PIPING BETWEEN THE FEEDWATER LINE INBOARD AND OUTBOARD CONTAINMENT ISOLATION VALVES.

26. OPERATION OF 2 OF 2 MANUAL SWITCHES IS REQUIRED FOR GANGED OPERATION OF THE 8 SRV'S USED FOR THE ADS.

27. SEE SUPPORTING DOCUMENT 1 FOR SYSTEM IDENTIFICATION AT INTERCONNECTIONS.

28. PNEUMATIC SUPPLY FROM REFERENCE DOCUMENT 33.

29. THE CONDENSING CHAMBER SHALL CONSIST OF A 25A x 25A PIPE ELBOW WHICH IS CLOSE-COUPLED TO THE MAIN STEAM LINE FLOW RESTRICTOR INSTRUMENT LINE TAPS. THE RUN OF 25A INSTRUMENT LINE FROM THE TAP ON THE MAIN STEAM LINE FLOW RESTRICTOR TO THE ELBOW SHALL BE LEVEL IN THE HORIZONTAL PLANE WITHIN 0.50 CM FOR ALL CONDITIONS. THE 25A INSTRUMENT LINE CONNECTION TO THE ELBOW SHALL BE LOCATED VERTICALLY AND EXTEND DOWNWARD. THE 25A PIPE SHALL HAVE A DOWNWARD SLOPE ≥1/24. PRIOR TO PENETRATING THE CONTAINMENT WALL, THE 25A PIPE SHALL BE REDUCED TO 20A. FLEXIBILITY SHALL BE PROVIDED IN THE 25A AND 20A PIPE SUCH THAT THE CONDENSING CHAMBER MOVES WITH THE RPV AS IT THERMALLY EXPANDS AND CONTRACTS.

30. INSULATE WITH INSULATION THAT HAS A MAXIMUM CONDUCTANCE OF 4.103E-01 J/h.cm².°C. THE INSULATION SHALL EXTEND FROM THE INSTRUMENT LINE TAP TO WITHIN 5.1 CM OF THE DOWNWARD EXTENDING INSTRUMENT LINE. THE HORIZONTAL INSTRUMENT LINE TAP TO THE JUNCTION WITH THE DOWNWARD EXTENDING INSTRUMENT LINE SHOULD BE LESS THAN ONE (1) METER.

31. THE MOTOR-OPERATED VALVES (MOVS) MPL B21-F007A&B IN THE CLEAN-UP WATER (CUW) SYSTEM INJECTION LINES TO THE FEEDWATER LINES MAY BE DELETED IF THE RPV FEEDWATER NOZZLE FATIGUE USAGE IS ≤1.0 WITHOUT THE CUW SYS FEEDWATER LINE SELECTION FEATURE.

32. THE THERMAL SLEEVE SHOWN MAY BE DELETED IF THE STRESS ANALYSIS SHOWS THAT IT IS NOT REQUIRED.

33. SEE REFERENCE DOCUMENT 3 FOR THE INSTRUMENT SETPOINT REQUIREMENTS.

34. FOR INTERFACE CONNECTIONS, SEE THE MSIV EQUIPMENT REQUIREMENTS, SPECIFICATION SUPPORT DRAWING MPL F008 AND F009.

35. FOR VENT AND DRAIN LINES OPEN TO THE ATMOSPHERE, DOWNSTREAM OF THE OUTBOARD SHUT-OFF VALVE, THE FOLLOWING BOUNDARY CONDITIONS APPLY:
   MAXIMUM OPERATING PRESSURE – 0 MPa G
   MAXIMUM OPERATING TEMPERATURE – 66°C
   DESIGN CLASS AND QA CLASS – 7G
   SEISMIC CLASS – C

36. PIPING DESIGN SPECIFICATION AS FOLLOWS:
   A. MAXIMUM OPERATING PRESSURE – SEE SPECIFIC BOUNDARIES ON DRAWING
   B. MAXIMUM OPERATING TEMPERATURE – SEE SPECIFIC BOUNDARIES ON DRAWING
   C. MATERIAL – SEE TABLE 5
   D. PIPING THICKNESS – SEE TABLE 5
   E. ASME CLASS – SEE SPECIFIC BOUNDARIES ON DRAWING
   F. QUALITY CLASS – SEE SPECIFIC BOUNDARIES ON DRAWING
   G. SEISMIC CLASS – SEE SPECIFIC BOUNDARIES ON DRAWING
   H. FLUID – SEE TABLE 5

37. THE RELIEF VALVE F708 IS NOT REQUIRED IF INTERNAL PROTECTION IS PROVIDED WITHIN LT004 TO LIMIT THE DIFFERENTIAL PRESSURE ACROSS THE SENSING ELEMENT.

38. THE INSTRUMENT LINES SHALL BE SEISMIC CLASS As FROM THE LAST ANCHOR POINT TO THE PRESSURE TRANSMITTERS PT028 AND P1301.

39. PROVIDES INTERFACE BETWEEN SEISMIC CATEGORY I AND NON-SEISMIC CATEGORY PIPING.

40. THE MAXIMUM OPERATING TEMPERATURE OF THE FEEDWATER LINE FROM THE SEISMIC INTERFACE TO THE UPSTREAM SIDE OF THE MOTOR OPERATED VALVE MPL B21-F001 SHALL BE DETERMINED BY THE DESIGNER OF THE FEEDWATER SYSTEM

41. PIPE WITH A DESIGN PRESSURE OF 2.82 MPa G OR GREATER SHALL HAVE ITS MINIMUM WALL THICKNESS NO LESS THAN THAT OF A STANDARD WEIGHT PIPE. THICKER THAN STANDARD WEIGHT PIPE SHALL BE USED IF REQUIRED BY THE DESIGN PRESSURE OR OTHER REQUIREMENTS

42. VALVES WITH A DESIGN PRESSURE OF 2.82 MPa G OR GREATER SHALL BE A MINIMUM OF CLASS 300, OR OF A HIGHER CLASS IF REQUIRED BY THE DESIGN PRESSURE.

43. THE FLOW CONTROL STATION CONTAINS THE EQUIPMENT NECESSARY FOR LOCAL FLOW INDICATION AND LOCAL FLOW CONTROL.

REFERENCE DOCUMENT UNDER THE FOLLOWING IDENTITIES ARE TO BE USED IN CONJUNCTION WITH THIS DRAWING

		MPL NO
1.	WATER QUALITY REQUIREMENTS	A11-3040
2	REACTOR PRESSURE VESSEL SYSTEM, ICD	B11-2020
3.	NUCLEAR BOILER SYS. P&ID DATA	B21-1010
4.	NUCLEAR BOILER SYSTEM, PFD	B21-1020
5.	NUCLEAR BOILER SYSTEM, IBD	B21-1030
6	NOT USED	------
7.	NOT USED	------
8	NOT USED	------
9.	CONTROL ROD DRIVE SYSTEM, P&ID	C12-1010
10	REACTOR RECIRCULATION SYSTEM, P&ID	B31-1010
11.	FEEDWATER CONTROL SYSTEM IBD	C31-1030
12	FEEDWATER CONTROL SYSTEM, IED	C31-1040
13	REMOTE SHUTDOWN SYSTEM, IED	C61-1040
14	REACTOR PROTECTION SYSTEM, IED	C71-1040
15	RECIRCULATION FLOW CONTROL SYS, IBD	C81-1030
16.	RECIRCULATION FLOW CONTROL SYS, IED	C81-1040
17	RESIDUAL HEAT REMOVAL SYSTEM, P&ID	E11-1010
18.	RESIDUAL HEAT REMOVAL SYSTEM, IBD	E11-1030
19.	HIGH PRESSURE CORE FLOODER SYSTEM, IBD	E22-1030
20	LEAK DETECTION AND ISOLATION SYSTEM, IBD	E31-1030
21.	LEAK DETECTION AND ISOLATION SYSTEM, IED	E31-1040
22	REACTOR CORE ISOLATION COOLING SYSTEM, P&ID	E51-1010
23	REACTOR CORE ISOLATION COOLING SYSTEM, IBD	E51-1030
24.	REACTOR WATER CLEANUP SYS. P&ID	G31-1010
25	LIQUID WASTE, RADWASTE SYSTEM, P&ID	K17-1010
26	LOW CONDUCTIVITY WASTE, RADWASTE SYSTEM, P&ID	K17-1010
27	TURBINE MAIN STEAM SYSTEM, P&ID	N11-1010
28.	CONDENSATE AND FEEDWATER SYSTEM, P&ID	N21-1010
29	TURBINE CONTROL SYSTEM, IBD	N32-1030
30.	TURBINE CONTROL SYSTEM, IED	N32-1040
31	STEAM BYPASS & PRESSURE CONTROL SYS, IED	C85-1040
32	MAIN CONDENSER	N61-1010
33	INSTRUMENT AIR SYSTEM, P&ID	P52-1010
34.	HIGH PRESS NITROGEN GAS SUPPLY SYS, P&ID	P54-1010
35.	VALVE GLAND LEAKAGE TREATMENT, RADWASTE SYS, P&ID	K17-1010
36	SAMPLING SYSTEM, P&ID	P91-1010
37.	NOT USED	------
38	NOT USED	------
39.	ATMOSPHERIC CONTROL SYSTEM P&ID	T31-1010
40.	MAIN STEAM PIPING EQUIPMENT REQUIREMENTS SPECIFICATION SUPPORT DRAWING	B21-G001

✱ DENOTES THAT THIS COMPONENT IS PART OF AN ASSEMBLY WHERE THE ENTIRE ASSEMBLY HAS ONE MPL NUMBER.

** REFERENCE INFORMATION TO BE PROVIDED AS: INTERFACE DOES NOT AFFECT THE DESIGN INFORMATION SHOWN ON THIS DRAWING OR ITS VERIFICATION.

	SUPPORTING DOCUMENTS	MPL NO
1.	NUCLEAR PLANT SYSTEM STRUCTURE	A10-3010
2	PIPING AND INSTRUMENT SYMBOLS	A10-3030
3	GROUP CLASSIFICATION AND CONTAINMENT ISOLATION DIAGRAM	A11-1030
4	PROCESS INSTRUMENTATION REQUIREMENT SPEC	A11-3030

MPL NO. B21-1010

FIGURE 5.1-3 NUCLEAR BOILER SYSTEM P&ID (Sheet 1 of 11)

21-74

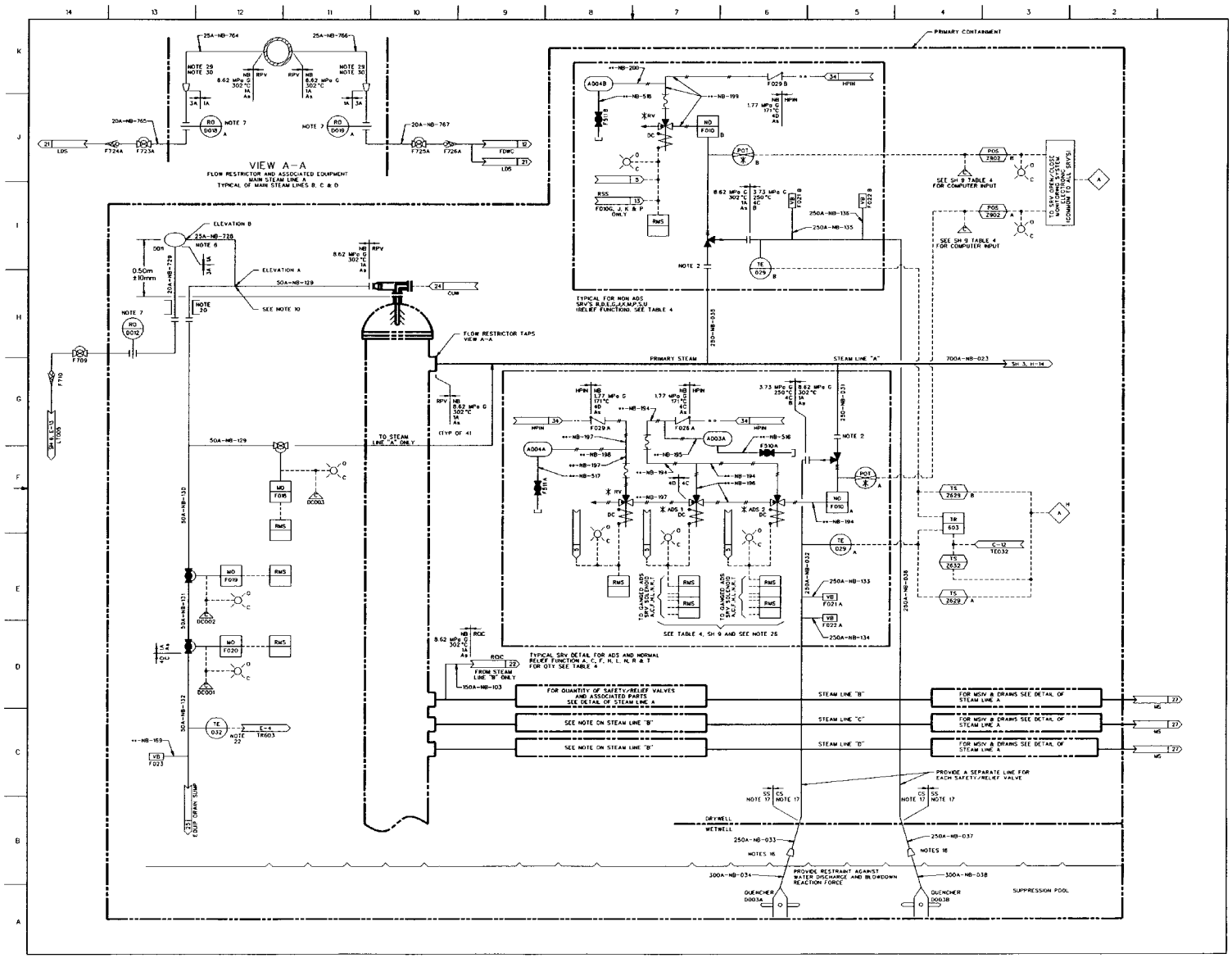

FIGURE 5.1-3 NUCLEAR BOILER SYSTEM P&ID (Sheet 2 of 11)

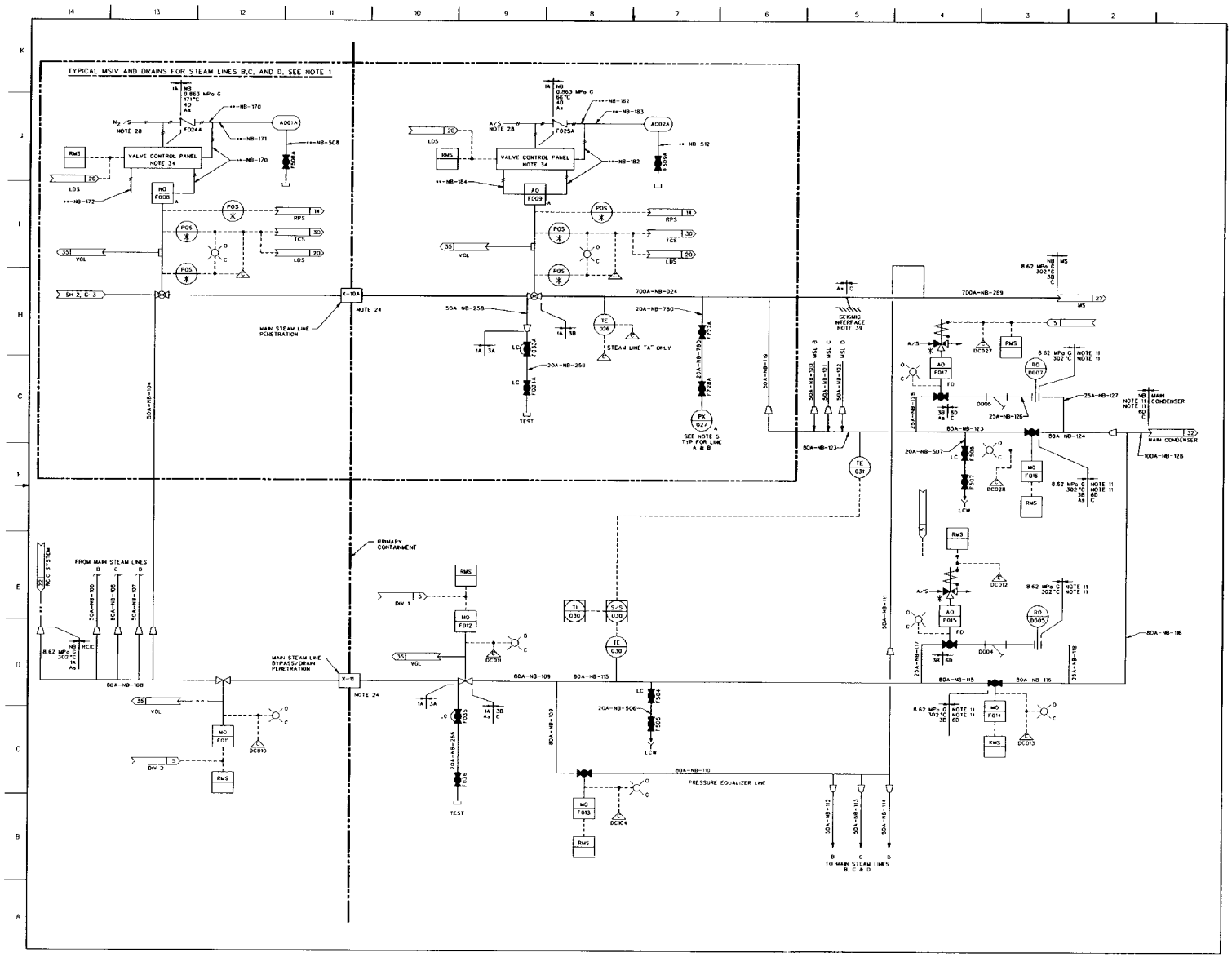

FIGURE 5.1-3 NUCLEAR BOILER SYSTEM P&ID (Sheet 3 of 11)

21-76

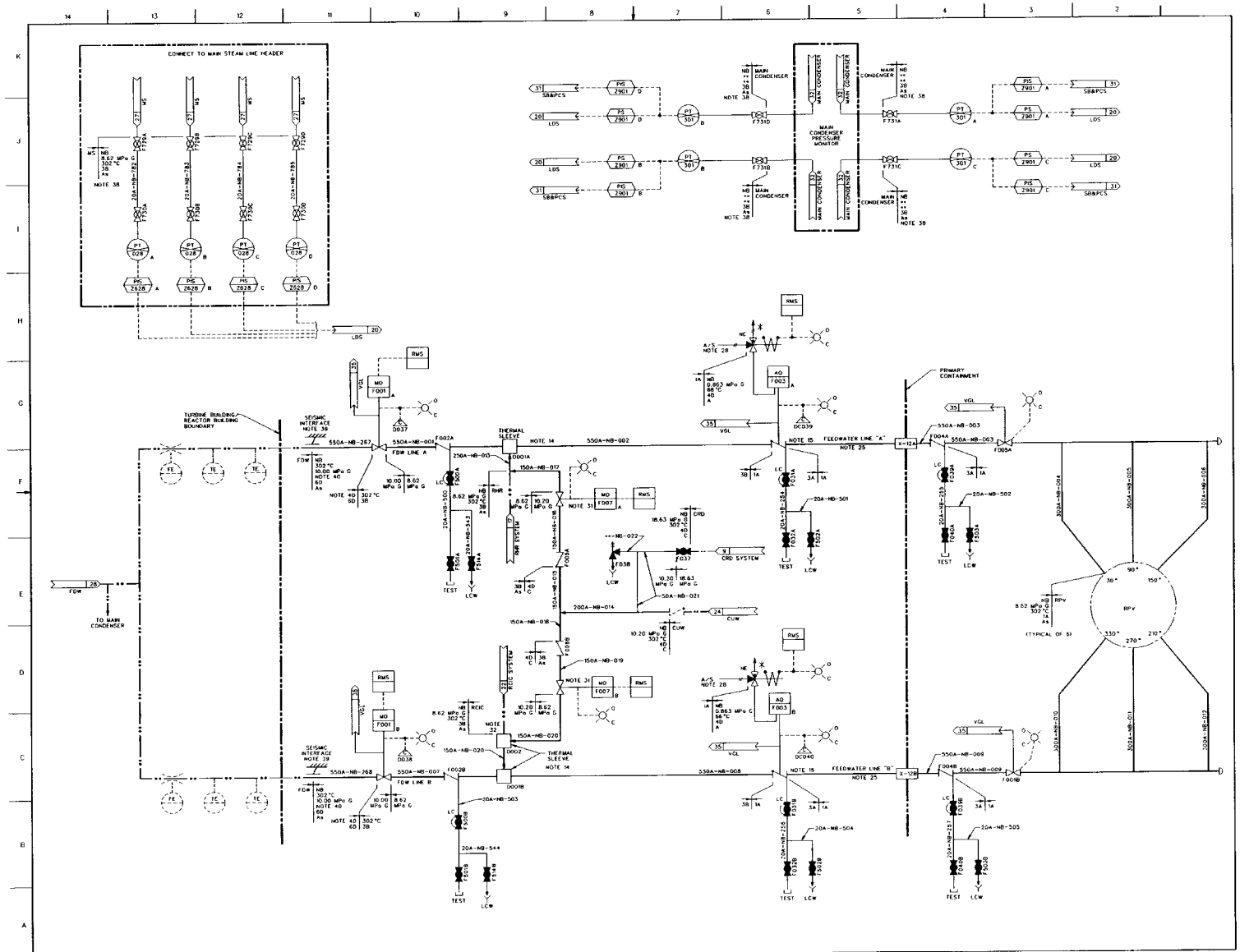

FIGURE 5.1-3 NUCLEAR BOILER SYSTEM P&ID (Sheet 4 of 11)

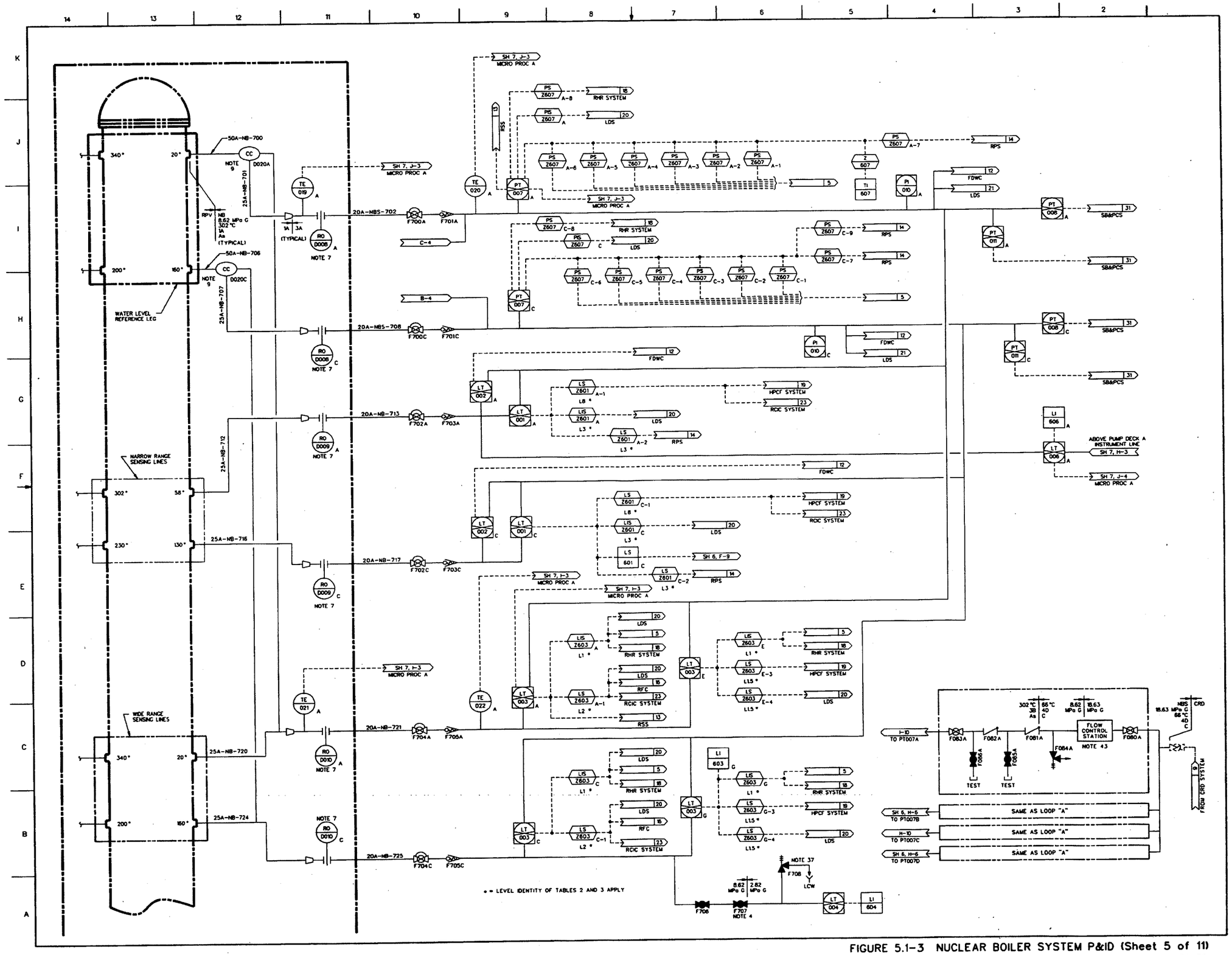

FIGURE 5.1-3 NUCLEAR BOILER SYSTEM P&ID (Sheet 5 of 11)

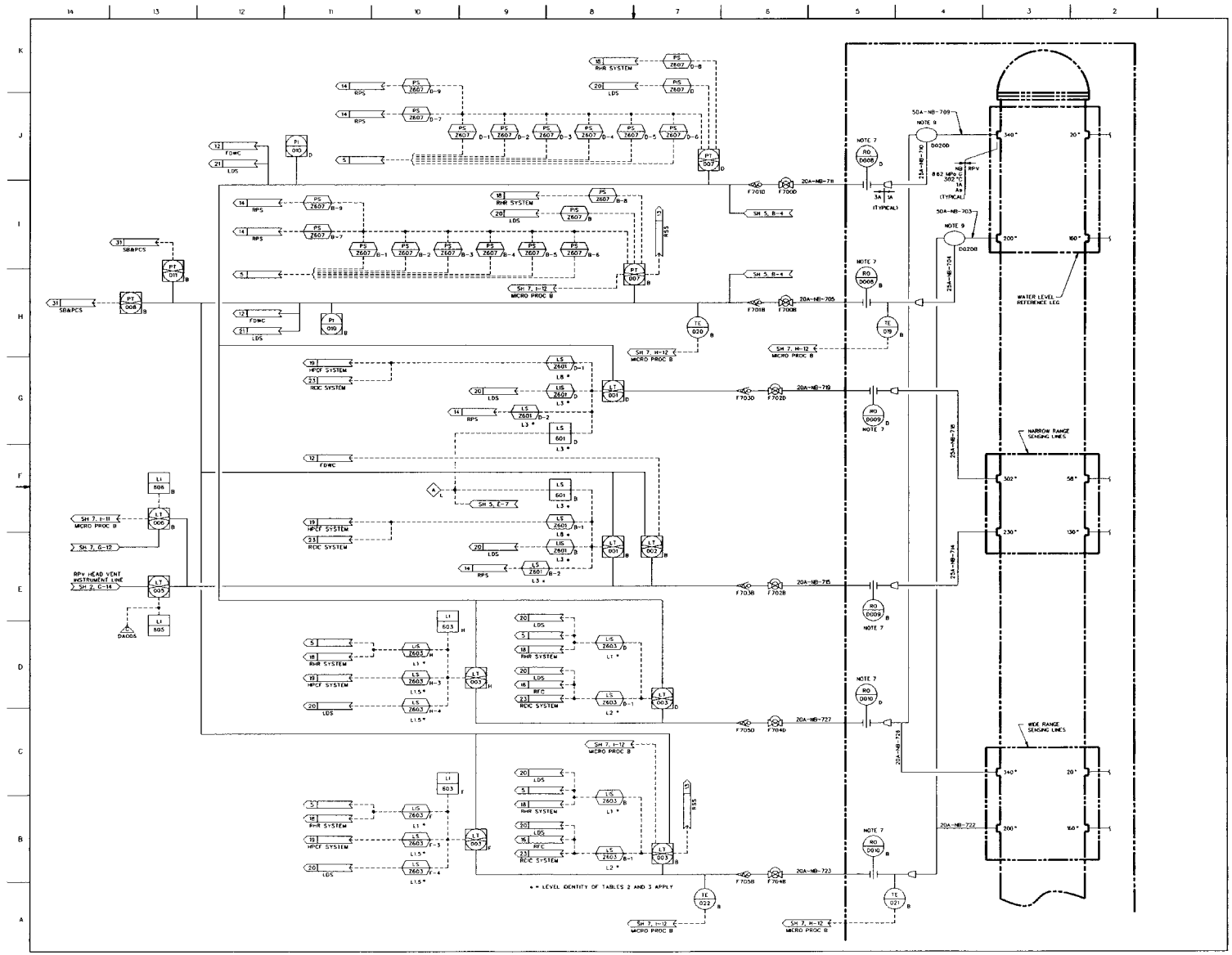

FIGURE 5.1-3 NUCLEAR BOILER SYSTEM P&ID (Sheet 6 of 11)

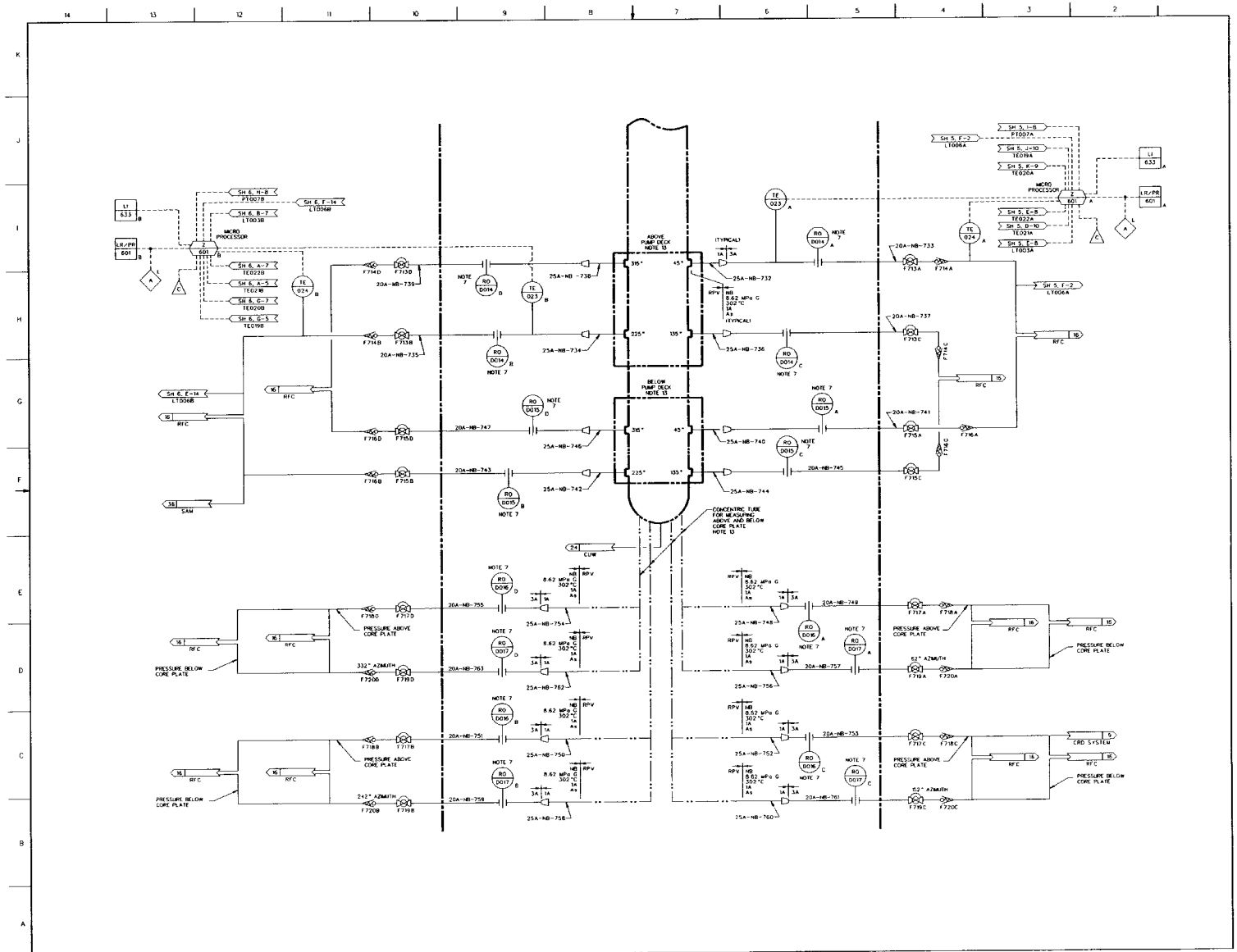

FIGURE 5.1-3 NUCLEAR BOILER SYSTEM P&ID (Sheet 7 of 11)

21-80

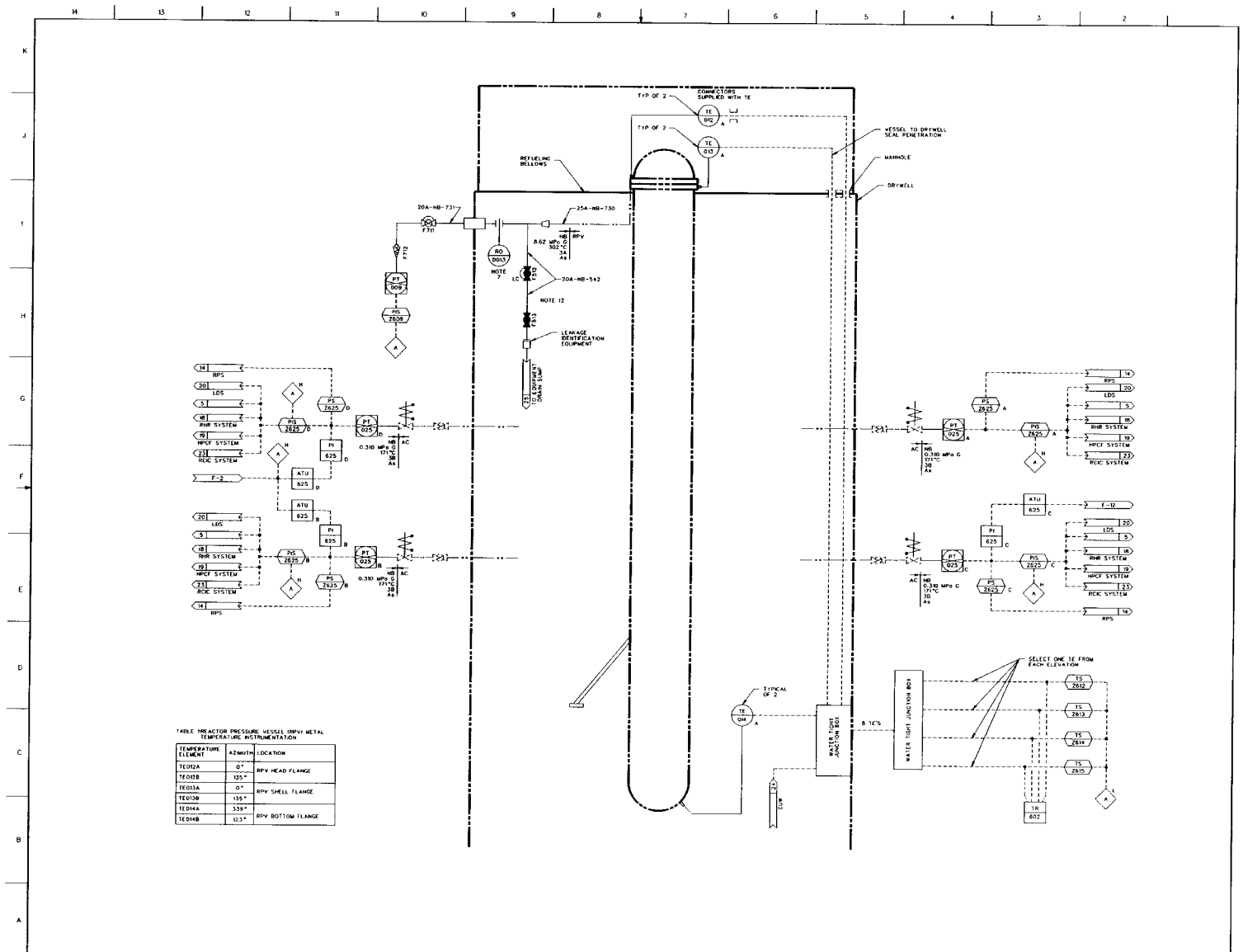

TABLE REACTOR PRESSURE VESSEL (RPV) METAL TEMPERATURE INSTRUMENTATION

TEMPERATURE ELEMENT	AZIMUTH	LOCATION
TE012A	0°	RPV HEAD FLANGE
TE012B	135°	
TE013A	0°	RPV SHELL FLANGE
TE013B	135°	
TE014A	339°	RPV BOTTOM FLANGE
TE014B	123°	

FIGURE 5.1-3 NUCLEAR BOILER SYSTEM P&ID (Sheet 8 of 11)

TABLE 4: SUFFIX LETTER ASSIGNMENTS FOR SAFETY/RELIEF VALVES AND ASSOCIATED EQUIPMENT

SAFETY/RELIEF VALVE F010		P	J	M	G	S	B	K	E	U	D	N	H	T	C	L	F	R	A
TEMPERATURE ELEMENT TE029		P	J	M	G	S	B	K	E	U	D	N	H	T	C	L	F	R	A
SOLENOID VALVE	ADS 1											N	H	T	C	L	F	R	A
	ADS 2											N	H	T	C	L	F	R	A
	RV	P	J	M	G	S	B	K	E	U	D	N	H	T	C	L	F	R	A
ACCUMULATOR	A003											N	H	T	C	L	F	R	A
	A004	P	J	M	G	S	B	K	E	U	D	N	H	T	C	L	F	R	A
CHECK VALVE	F026											N	H	T	C	L	F	R	A
	F029	P	J	M	G	S	B	K	E	U	D	N	H	T	C	L	F	R	A
SRV OPEN CLOSE MONITORING SYSTEM		P	J	M	G	S	B	K	E	U	D	N	H	T	C	L	F	R	A
	COMPUTER INPUT ⚠	NC041	NC042	NC043	NC044	NC045	NC046	NC047	NC048	NC049	NC050	NC051	NC052	NC053	NC054	NC055	NC056	NC057	NC058
* COMPUTER INPUT ⚠		B21 NC023	B21 NC024	B21 NC025	B21 NC026	B21 NC027	B21 NC028	B21 NC029	B21 NC030	B21 NC031	B21 NC032	B21 NC033	B21 NC034	B21 NC035	B21 NC036	B21 NC037	B21 NC038	B21 NC039	B21 NC040
SPRING SET PRESSURE (MPa G)		7.92	7.92	7.99	7.99	7.99	7.99	8.06	8.06	8.06	8.06	8.13	8.13	8.13	8.13	8.20	8.20	8.20	8.20
SPRING RESEAT PRESSURE (MPa G)		7.37	7.37	7.44	7.44	7.44	7.44	7.50	7.50	7.50	7.50	7.56	7.56	7.56	7.56	7.63	7.63	7.63	7.63
RELIEF SET PRESSURE (MPa G)		7.51	7.58	7.65	7.65	7.65	7.65	7.72	7.72	7.72	7.72	7.79	7.79	7.79	7.79	7.86	7.86	7.86	7.86
RELIEF RESEAT PRESSURE (MPa G)		7.00	7.07	7.14	7.14	7.14	7.14	7.21	7.21	7.21	7.21	7.28	7.28	7.28	7.28	7.35	7.35	7.35	7.35
	PT007A THRU D/ PS-2607A-6 THRU D-6	≥2 OF A,B,C,D																	
	PT007A THRU D/ PS-2607A-5 THRU D-5		≥2 OF A,B,C,D																
	PT007A THRU D/ PS-2607A-4 THRU D-4			≥2 OF A,B,C,D															
	PT007A THRU D/ PS-2607A-3 THRU D-3							≥2 OF A,B,C,D											
	PT007A THRU D/ PS-2607A-2 THRU D-2											≥2 OF A,B,C,D							
	PT007A THRU D/ PS-2607A-1 THRU D-1															≥2 OF A,B,C,D			

* COMPUTER INPUTS FOR SRV POSITION SEE PERFORMANCE MONITORING AND CONTROL SYSTEM C91-4010

TABLE 2 ELEVATION CORRELATION CHART

REFERENCE	(COLD VESSEL) cm ABOVE VESSEL ZERO	REFERENCE	REACTOR VESSEL WATER LEVEL IDENTITY (SEE TABLE 3)	CONTROL ROOM WATER LEVEL INDICATION AND TRIP LEVELS (SEE NOTE 2)				
				POST ACCIDENT MONITOR	SAFEGUARDS		FEEDWATER	
				FUEL ZONE RANGE	WIDE RANGE	NARROW RANGE		SHUTDOWN	REACTOR WELL
				LI 606A&B	LIS 2603A,B, C,D,E,F,G&H	LIS 2601A B,C&D		LI 605	LI 604
									1800.0 cm
	2105.6 cm	TOP INSIDE OF HEAD						1282.5 cm	
INSTRUMENT LINE NOZZLE	1833.8 cm								
	1554.4 cm	MAIN STEAM LINE NOZZLES			860.4 cm				
						508.0 cm	508.0 cm		
			8			484.4 cm	484.4 cm		
			1389.3 cm						
			7				448.6 cm		
	1342.1 cm	HI-ALARM	1353.5 cm						
		NORMAL WATER LEVEL	4				425.6 cm		
		LOW ALARM	1330.5 cm						
			3			380.8 cm	380.8 cm		
			1285.7 cm						
	1267.3 cm	SEPARATOR REF 0				355.5 cm	355.5 cm	355.5 cm	
	1224.2 cm	BOTTOM OF DRYER SKIRT							
INSTRUMENT LINE NOZZLE (NARROW RANGE)	1222.0 cm								
			2		263.2 cm				
			1168.1 cm						
				127.0 cm					
					118.1 cm				
			1.5						
			1023.0 cm						
			1		34.7 cm				
	904.95 cm	TOP OF THE ACTIVE FUEL (TAF)	939.6 cm	0 cm	0 cm	0 cm	0 cm	0 cm	0 cm
INSTRUMENT LINE NOZZLE (WIDE RANGE)	697.8 cm								
				-381.0 cm					
	190.5 cm	UPPER INSTRUMENT LINE NOZZLES							
UPPER PUMP DECK	184.2 cm								
LOWER PUMP DECK	176.5 cm	170.2 cm LOWER							
	0 cm	BOTTOM HEAD							

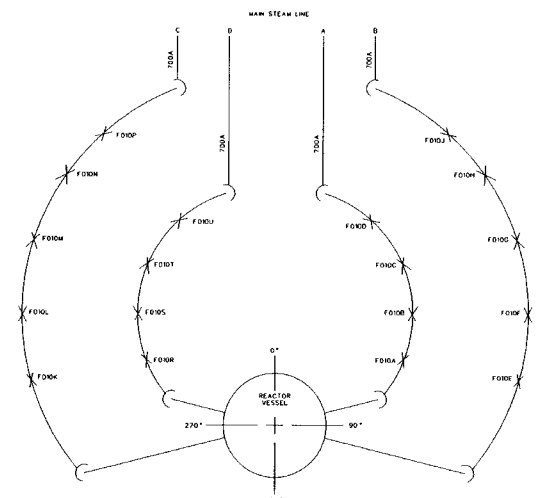

FIG. 3
SAFETY/RELIEF VALVE ORIENTATION AND STEAM PIPING LINE SIZES

TABLE 3 WATER LEVEL TRIP FUNCTION

REACTOR VESSEL WATER LEVEL	DESCRIPTION OF TRIPS	INSTRUMENT PROVIDING TRIP SIGNAL	NOTES
8	TRIPS RCIC TURBINE	LS-2601A-1 THRU D-1	NARROW RANGE
	TRIP HPCF INJECTION VALVES	LS-2601A-1 THRU D-1	NARROW RANGE
	CLOSE MAIN TURBINE STOP VALVES TRIPS FEEDWATER PUMPS	SEE REFERENCE DOCUMENT 12	NARROW RANGE
7	HIGH LEVEL ALARM	SEE REFERENCE DOCUMENT 12	NARROW RANGE
4	LOW LEVEL ALARM (RRS FLOW RUN BACK ON TRIP OF FEED PUMP)		NARROW RANGE
3	SCRAMS REACTOR	LS-2601A THRU D	NARROW RANGE
	CLOSE RHR SHUTDOWN COOLING ISOLATION VALVES	LS-2601A THRU D	NARROW RANGE
	CLOSE CONTAINMENT ISOL VALVES LDS EXCEPT D/W COOLING AND CUW ISOL VALVES AND MSIV'S	LS-2601A THRU D	NARROW RANGE
	TRIP 4 OF RRS PUMPS	SEE REFERENCE DOCUMENT 12	NARROW RANGE
2	INITIATES RCIC	LS-2603A-1 THRU D-1	WIDE RANGE
	TRIP REMAINING 6 RRS PUMPS	LS-2603A-1 THRU D-1	WIDE RANGE
	CLOSE CUW ISOL VALVES	LS-2603A-2 THRU D-2	WIDE RANGE
1.5	INITIATES HPCF B & C	LS-2603E-3 THRU H-3	WIDE RANGE
	CLOSE MSIV'S & SW COOLING SYSTEM ISOL VALVES	LS-2603E-4 THRU H-4	WIDE RANGE
1	INITIATES ADS	LIS-2603A THRU H	WIDE RANGE
	INITIATES RHR/LPFL MODE	LIS-2603A THRU H	WIDE RANGE

FIGURE 5.1-3 NUCLEAR BOILER SYSTEM P&ID (Sheet 9 of 11)

TABLE 5: PIPING SPECIFICATIONS

PIPE NO.	SCHEDULE	MATERIAL	FLUID
001	**	CS	W
002	**	CS	W
003	100	CS	W
004	100	CS	W
005	100	CS	W
006	100	CS	W
007	**	CS	W
008	**	CS	W
009	100	CS	W
010	100	CS	W
011	100	CS	W
012	100	CS	W
013	**	CS	W
014	**	CS	W
015	**	CS	W
016	**	CS	W
017	**	CS	W
018	**	CS	W
019	**	CS	W
020	**	CS	W
021	**	CS	W
022	**	CS	W
023	80	CS	S
024	**	CS	S
025	80	CS	S
026	**	CS	S
027	80	CS	S
028	**	CS	S
029	80	CS	S
030	**	CS	S
031	N/A	CS	S
032	80	CS	S
033	60	SS	S
034	60	SS	S
035	N/A	CS	S
036	80	CS	S
037	80	SS	S
038	60	SS	S
039	N/A	CS	S
040	80	CS	S
041	80	SS	S
042	80	SS	S
043	N/A	CS	S
044	80	CS	S
045	60	SS	S
046	60	SS	S
047	N/A	CS	S
048	80	CS	S
049	80	SS	S
050	60	SS	S
051	N/A	CS	S
052	80	CS	S
053	60	SS	S
054	60	SS	S
055	N/A	CS	S
056	80	CS	S
057	60	SS	S
058	60	SS	S
059	N/A	CS	S
060	80	CS	S
061	80	SS	S
062	80	SS	S
063	N/A	CS	S
064	80	CS	S
065	60	SS	S
066	60	SS	S
067	N/A	CS	S
068	80	CS	S
069	60	SS	S
070	60	SS	S
071	N/A	CS	S
072	80	CS	S
073	60	SS	S
074	60	SS	S
075	N/A	CS	S
076	80	CS	S
077	60	SS	S
078	60	SS	S
079	N/A	CS	S
080	80	CS	S

TABLE 5: PIPING SPECIFICATIONS (CONT'D)

PIPE NO.	SCHEDULE	MATERIAL	FLUID
081	60	SS	S
082	60	SS	S
083	N/A	CS	S
084	80	CS	S
085	50	SS	S
086	50	SS	S
087	N/A	CS	S
088	80	CS	S
089	60	SS	S
090	60	SS	S
091	N/A	CS	S
092	80	CS	S
093	60	SS	S
094	60	SS	S
095	N/A	CS	S
096	80	CS	S
097	60	SS	S
098	60	SS	S
099	N/A	CS	S
100	80	CS	S
101	60	SS	S
102	60	SS	S
103	120	CS	S
104	160	CS	S
105	160	CS	S
106	160	CS	S
107	160	CS	S
108	160	CS	S
109	**	CS	S
110	**	CS	S
111	**	CS	S
112	**	CS	S
113	**	CS	S
114	**	CS	S
115	**	CS	S
116	**	CS	S
117	**	CS	S
118	**	CS	S
119	**	CS	S
120	**	CS	S
121	**	CS	S
122	**	CS	S
123	**	CS	S
124	**	CS	S
125	**	CS	S
126	**	CS	S
127	**	CS	S
128	**	CS	S
129	80	CS	S
130	80	CS	S
131	80	CS	S
132	**	CS	S
133	80	CS	S
134	80	CS	S
135	80	CS	S
136	80	CS	S
137	80	CS	S
138	80	CS	S
139	80	CS	S
140	80	CS	S
141	80	CS	S
142	80	CS	S
143	80	CS	S
144	80	CS	S
145	80	CS	S
146	80	CS	S
147	80	CS	S
148	80	CS	S
149	80	CS	S
150	80	CS	S
151	80	CS	S
152	80	CS	S
153	80	CS	S
154	80	CS	S
155	80	CS	S
156	80	CS	S
157	80	CS	S
158	80	CS	S
159	80	CS	S
160	80	CS	S

TABLE 5: PIPING SPECIFICATIONS (CONT'D)

PIPE NO.	SCHEDULE	MATERIAL	FLUID
161	80	CS	S
162	80	CS	S
163	80	CS	S
164	80	CS	S
165	80	CS	S
166	80	CS	S
167	80	CS	S
168	80	CS	S
169	**	CS	S
170	**	SS	N
171	**	SS	N
172	**	SS	N
173	**	SS	N
174	**	SS	N
175	**	SS	N
176	**	SS	N
177	**	SS	N
178	**	SS	N
179	**	SS	N
180	**	SS	N
181	**	SS	N
182	**	SS	A
183	**	SS	A
184	**	SS	A
185	**	SS	A
186	**	SS	A
187	**	SS	A
188	**	SS	A
189	**	SS	A
190	**	SS	A
191	**	SS	A
192	**	SS	A
193	**	SS	A
194	**	SS	N
195	**	SS	N
196	**	SS	N
197	**	SS	N
198	**	SS	N
199	**	SS	N
200	**	SS	N
201	**	SS	N
202	**	SS	N
203	**	SS	N
204	**	SS	N
205	**	SS	N
206	**	SS	N
207	**	SS	N
208	**	SS	N
209	**	SS	N
210	**	SS	N
211	**	SS	N
212	**	SS	N
213	**	SS	N
214	**	SS	N
215	**	SS	N
216	**	SS	N
217	**	SS	N
218	**	SS	N
219	**	SS	N
220	**	SS	N
221	**	SS	N
222	**	SS	N
223	**	SS	N
224	**	SS	N
225	**	SS	N
226	**	SS	N
227	**	SS	N
228	**	SS	N
229	**	SS	N
230	**	SS	N
231	**	SS	N
232	**	SS	N
233	**	SS	N
234	**	SS	N
235	**	SS	N
236	**	SS	N
237	**	SS	N
238	**	SS	N
239	**	SS	N
240	**	SS	N

TABLE 5: PIPING SPECIFICATIONS (CONT'D)

PIPE NO.	SCHEDULE	MATERIAL	FLUID
241	**	SS	N
242	**	SS	N
243	**	SS	N
244	**	SS	N
245	**	SS	N
246	**	SS	N
247	**	SS	N
248	**	SS	N
249	**	SS	N
250	**	SS	N
251	**	SS	N
252	**	SS	N
253	**	SS	N
254	160	CS	W
255	160	CS	W
256	160	CS	W
257	160	CS	W
258	160	CS	S
259	160	CS	S
260	160	CS	S
261	160	CS	S
262	160	CS	S
263	160	CS	S
264	160	CS	S
265	160	CS	S
266	**	CS	S
267	**	CS	W
268	**	CS	W
269	**	CS	S
270	**	CS	S
271	**	CS	S
272	**	CS	S
500	**	CS	W
501	160	CS	W
502	160	CS	W
503	**	CS	W
504	160	CS	W
505	160	CS	W
506	**	CS	S
507	**	CS	S
508	**	SS	N
509	**	SS	A
510	**	SS	N
511	**	SS	A
512	**	SS	N
513	**	SS	A
514	**	SS	N
515	**	SS	A
516	**	SS	N
517	**	SS	N
518	**	SS	N
519	**	SS	N
520	**	SS	N
521	**	SS	N
522	**	SS	N
523	**	SS	N
524	**	SS	N
525	**	SS	N
526	**	SS	N
527	**	SS	N
528	**	SS	N
529	**	SS	N
530	**	SS	N
531	**	SS	N
532	**	SS	N
533	**	SS	N
534	**	SS	N
535	**	SS	N
536	**	SS	N
537	**	SS	N
538	**	SS	N
539	**	SS	N
540	**	SS	N
541	**	SS	N
542	**	CS	S
543	160	CS	W
544	160	CS	W

TABLE 5: PIPING SPECIFICATIONS (CONT'D)

PIPE NO.	SCHEDULE	MATERIAL	FLUID
700	80	SS	S
701	**	SS	W
702	**	SS	W
703	80	SS	S
704	**	SS	W
705	**	SS	W
706	80	SS	S
707	**	SS	W
708	**	SS	W
709	80	SS	S
710	**	SS	W
711	**	SS	W
712	80	SS	W
713	**	SS	W
714	80	SS	W
715	**	SS	W
716	80	SS	W
717	**	SS	W
718	80	SS	W
719	**	SS	W
720	80	SS	W
721	**	SS	W
722	80	SS	W
723	**	SS	W
724	80	SS	W
725	**	SS	W
726	80	SS	W
727	**	SS	W
728	**	CS	S
729	**	SS	W
730	**	SS	S
731	**	SS	S
732	80	SS	W
733	**	SS	W
734	80	SS	W
735	**	SS	W
736	80	SS	W
737	**	SS	W
738	80	SS	W
739	**	SS	W
740	80	SS	W
741	**	SS	W
742	80	SS	W
743	**	SS	W
744	80	SS	W
745	**	SS	W
746	80	SS	W
747	**	SS	W
748	80	SS	W
749	**	SS	W
750	80	SS	W
751	**	SS	W
752	80	SS	W
753	**	SS	W
754	80	SS	W
755	**	SS	W
756	80	SS	W
757	**	SS	W
758	80	SS	W
759	**	SS	W
760	80	SS	W
761	**	SS	W
762	80	SS	W
763	**	SS	W
764	**	SS	S
765	**	SS	W
766	**	SS	S
767	**	SS	W
768	**	SS	S
769	**	SS	W
770	**	SS	S
771	**	SS	W
772	**	SS	S
773	**	SS	W
774	**	SS	S
775	**	SS	W
776	**	SS	S
777	**	SS	W
778	**	SS	S
779	**	SS	W

TABLE 5: PIPING SPECIFICATIONS (CONT'D)

PIPE NO.	SCHEDULE	MATERIAL	FLUID
780	**	CS	S
781	**	CS	S
782	**	SS	S
783	**	SS	S
784	**	SS	S
785	**	SS	S

FIGURE 5.1-3 NUCLEAR BOILER SYSTEM P&ID (Sheet 10 of 11)

21-83

TABLE 6 : PIPE NUMBERS FOR THE MAIN STEAM LINES

MAIN STEAM LINE	RPV TO THE OUTBOARD MSIV	OUTBOARD MSIV TO SEISMIC INTERFACE	SEISMIC INTERFACE TO MAIN STEAM SYSTEM	OUTBOARD MSIV TEST LINE	
				OUTBOARD MSIV TO REDUCER	DOWNSTREAM OF REDUCER
A	700A-NB-023	700A-NB-024	700A-NB-269	50A-NB-258	20A-NB-259
B	700A-NB-025	700A-NB-026	700A-NB-270	50A-NB-260	20A-NB-261
C	700A-NB-027	700A-NB-028	700A-NB-271	50A-NB-262	20A-NB-263
D	700A-NB-029	700A-NB-030	700A-NB-272	50A-NB-264	20A-NB-265

TABLE 7 : PIPE NUMBERS FOR THE SAFETY/RELIEF VALVE (SRV) DISCHARGE LINES

SRV	SRV DISCHARGE LINE				VACUUM BREAKER LINES	
	MSL TO SRV NOTE 2	SRV TO DIAPHRAGM FLOOR	DIAPHRAGM FLOOR TO REDUCER	REDUCER TO QUENCHER	UPSTREAM	DOWNSTREAM
F010A	250A-NB-031	250A-NB-032	250A-NB-033	300A-NB-034	250A-NB-133	250A-NB-134
F010B	250A-NB-035	250A-NB-036	250A-NB-037	300A-NB-038	250A-NB-135	250A-NB-136
F010C	250A-NB-039	250A-NB-040	250A-NB-041	300A-NB-042	250A-NB-137	250A-NB-138
F010D	250A-NB-043	250A-NB-044	250A-NB-045	300A-NB-046	250A-NB-139	250A-NB-140
F010E	250A-NB-047	250A-NB-048	250A-NB-049	300A-NB-050	250A-NB-141	250A-NB-142
F010F	250A-NB-051	250A-NB-052	250A-NB-053	300A-NB-054	250A-NB-143	250A-NB-144
F010G	250A-NB-055	250A-NB-056	250A-NB-057	300A-NB-058	250A-NB-145	250A-NB-146
F010H	250A-NB-059	250A-NB-060	250A-NB-061	300A-NB-062	250A-NB-147	250A-NB-148
F010J	250A-NB-063	250A-NB-064	250A-NB-065	300A-NB-066	250A-NB-149	250A-NB-150
F010K	250A-NB-067	250A-NB-068	250A-NB-069	300A-NB-070	250A-NB-151	250A-NB-152
F010L	250A-NB-071	250A-NB-072	250A-NB-073	300A-NB-074	250A-NB-153	250A-NB-154
F010M	250A-NB-075	250A-NB-076	250A-NB-077	300A-NB-078	250A-NB-155	250A-NB-156
F010N	250A-NB-079	250A-NB-080	250A-NB-081	300A-NB-082	250A-NB-157	250A-NB-158
F010P	250A-NB-083	250A-NB-084	250A-NB-085	300A-NB-086	250A-NB-159	250A-NB-160
F010R	250A-NB-087	250A-NB-088	250A-NB-089	300A-NB-090	250A-NB-161	250A-NB-162
F010S	250A-NB-091	250A-NB-092	250A-NB-093	300A-NB-094	250A-NB-163	250A-NB-164
F010T	250A-NB-095	250A-NB-096	250A-NB-097	300A-NB-098	250A-NB-165	250A-NB-166
F010U	250A-NB-099	250A-NB-100	250A-NB-101	300A-NB-102	250A-NB-167	250A-NB-168

TABLE 8 : PIPE NUMBERS FOR THE MAIN STEAM ISOLATION VALVE (MSIV) PNEUMATIC LINES

MSIV	OPENING-CHECK VALVE TO MSIV	OPENING-FROM ACCUMULATOR	CLOSING-VALVE CONTROL PANEL TO MSIV	DRAIN LINE
F008A	++-NB-170	++-NB-171	++-NB-172	++-NB-508
F008B	++-NB-173	++-NB-174	++-NB-175	++-NB-509
F008C	++-NB-176	++-NB-177	++-NB-178	++-NB-510
F008D	++-NB-179	++-NB-180	++-NB-181	++-NB-511
F009A	++-NB-182	++-NB-183	++-NB-184	++-NB-512
F009B	++-NB-185	++-NB-186	++-NB-187	++-NB-513
F009C	++-NB-188	++-NB-189	++-NB-190	++-NB-514
F009D	++-NB-191	++-NB-192	++-NB-193	++-NB-515

TABLE 10 : PIPE NUMBERS FOR THE MAIN STEAM LINE (MSL) INSTRUMENT LINES

MAIN STEAM LINE	MSL FLOW RESTRICTOR INSTRUMENT LINES				MSL PRESSURE TEST POINT
	INSTRUMENT LINE TO LDS		INSTRUMENT LINE TO LDS & FDWC		
	MSL TO REDUCER	REDUCER TO EXCESS FLOW CHECK VALVE	MSL TO REDUCER	REDUCER TO EXCESS FLOW CHECK VALVE	
A	25A-NB-764	20A-NB-765	25A-NB-766	20A-NB-767	20A-NB-780
B	25A-NB-768	20A-NB-769	25A-NB-770	20A-NB-771	20A-NB-781
C	25A-NB-772	20A-NB-773	25A-NB-774	20A-NB-775	-
D	25A-NB-776	20A-NB-777	25A-NB-778	20A-NB-779	-

TABLE 9 : PIPE NUMBERS FOR THE SAFETY/RELIEF VALVE (SRV) PNEUMATIC LINES

SRV	ADS PNEUMATIC LINES				PNEUMATIC LINES FOR POWER-ACTUATED RELIEF		
	CHECK VALVE TO SOV "ADS 2" TO SRV	BRANCH LINE FROM ACCUMULATOR	BRANCH LINE THRU SOV "ADS 1" TO SOV "ADS 2"	ACCUMULATOR DRAIN LINE	CHECK VALVE TO SOV "ADS 1" (ADS SRV) OR SRV (NON-ADS SRV)	BRANCH LINE FROM ACCUMULATOR	ACCUMULATOR DRAIN LINE
F010A	++-NB-194	++-NB-195	++-NB-196	++-NB-516	++-NB-197	++-NB-198	++-NB-517
F010B					++-NB-199	++-NB-200	++-NB-518
F010C	++-NB-201	++-NB-202	++-NB-203	++-NB-519	++-NB-204	++-NB-205	++-NB-520
F010D					++-NB-206	++-NB-207	++-NB-521
F010E					++-NB-208	++-NB-209	++-NB-522
F010F	++-NB-210	++-NB-211	++-NB-212	++-NB-523	++-NB-213	++-NB-214	++-NB-524
F010G					++-NB-215	++-NB-216	++-NB-525
F010H	++-NB-217	++-NB-218	++-NB-219	++-NB-526	++-NB-220	++-NB-221	++-NB-527
F010J					++-NB-222	++-NB-223	++-NB-528
F010K					++-NB-224	++-NB-225	++-NB-529
F010L	++-NB-226	++-NB-227	++-NB-228	++-NB-530	++-NB-229	++-NB-230	++-NB-531
F010M					++-NB-231	++-NB-232	++-NB-532
F010N	++-NB-233	++-NB-234	++-NB-235	++-NB-533	++-NB-236	++-NB-237	++-NB-534
F010P					++-NB-238	++-NB-239	++-NB-535
F010R	++-NB-240	++-NB-241	++-NB-242	++-NB-536	++-NB-243	++-NB-244	++-NB-537
F010S					++-NB-245	++-NB-246	++-NB-538
F010T	++-NB-247	++-NB-248	++-NB-249	++-NB-539	++-NB-250	++-NB-251	++-NB-540
F010U					++-NB-252	++-NB-253	++-NB-541

FIGURE 5.1-3 NUCLEAR BOILER SYSTEM P&ID (Sheet 11 of 11)

21-84

NOTES:

1. ALL SIGNALS ARE TRANSMITTED AS SERIAL DATA TO EACH TLU OR SLU THROUGH EACH SERIAL OUTPUT.

2. FOUR TEMPERATURE ELEMENTS SHALL BE LOCATED AT APPROXIMATELY EQUAL INTERVALS IN THE VERTICAL DIRECTION SO AS TO MONITOR AMBIENT TEMPERATURES OVER THE FULL HEIGHT OF THE DRYWELL.

3. TEMPERATURE DETECTORS SHALL BE LOCATED OR SHIELDED SO THAT THE DETECTOR IS SENSITIVE TO THE AIR TEMPERATURE AND NOT THE RADIATED HEAT FROM HOT EQUIPMENT.

4. ALL INSTRUMENT LINES THAT CONNECT TO THE REACTOR COOLANT PRESSURE BOUNDARY AND PENETRATE THE CONTAINMENT WALL SHALL HAVE 0.35 MM RESTRICTING ORIFICES INSIDE THE CONTAINMENT. SEE SUPPORTING DOCUMENTS 2&3 FOR ADDITIONAL REQUIREMENTS.

5. EACH INSTRUMENT LINE THROUGH THE CONTAINMENT WALL SHALL HAVE TWO ISOLATION VALVES OUTSIDE THE CONTAINMENT LOCATED AS CLOSE TO THE CONTAINMENT AS PRACTICAL.

6. SOLENOID OPERATED GLOBE VALVES MAY BE ADOPTED FOR THE AIR OPERATED VALVES.

7. THIS DOCUMENT PROVIDES A FUNCTIONAL DEFINITION OF THE REQUIRED SYSTEM LEVEL PROCESS MONITORING AND CONTROL INSTRUMENTATION. IT DOES NOT ADDRESS DETAILS OF THE METHODS BY WHICH SIGNALS FROM THESE COMPONENTS WILL BE PROCESSED. THIS PROCESSING MAY INVOLVE THE PLANT MULTIPLEXING SYSTEM (H23) OR MAY UTILIZE HARDWIRING. SPECIFIC ELECTRICAL ISOLATION REQUIREMENTS SHOWN ON THIS DRAWING MAY BE UNNECESSARY IF MULTIPLEXED SIGNAL TRANSMISSION PROVIDES INHERENT ISOLATION.

8. ALL ALARMS SHALL BE LOCATED IN THE MAIN CONTROL ROOM.

9. ALL INPUTS TO C91/PMCS SHALL BE CONTINUOUSLY RECORDED.

10. THE LDS SHALL BE DESIGNED IN ACCORDANCE WITH THE SYSTEM DESIGN SPECIFICATION (E31-4010). OTHER PRIMARY CONTAINMENT ISOLATION (PCIV) VALVES, WHICH ARE PART OF OTHER SYSTEMS, ARE NOT SHOWN IN THIS IED. THOSE VALVES ARE SHOWN ON THE LDS/IBD – INTERLOCK BLOCK DIAGRAM (E31-1030).

11. FOR REACTOR WATER LEVELS MONITORING, SEE B21-1010.

12. FOR DRYWELL PRESSURE MONITORING, SEE B21-1010.

13. FOR DETECTION OF RADIATION LEAKAGE INTO COOLING WATER SUPPLYING RECIRC PUMP, RHR, AND CUW HEAT EXCHANGERS, SEE D11-1040.

14. LETTER DESIGNATIONS FOR FOUR DIVISIONS ARE AS FOLLOWS:

    A, E, J, N – DIVISION 1
    B, F, K, P – DIVISION 2
    C, G, L, R – DIVISION 3
    D, H, M, S – DIVISION 4

15. IF HEAT TRACING OF SAMPLE LINE IS NECESSARY TO PREVENT CONDENSATION, THE MAXIMUM ALLOWABLE SAMPLE TEMPERATURE IS LIMITED BY THE PHOTO MULTIPLIER TUBES IN THE MONITORING CHANNELS.

16. BALL VALVE MAY BE ADOPTED FOR THIS GATE VALVE.

17. DTM, TLU, SLU, OLU ARE PART OF SAFETY SYSTEM LOGIC AND CONTROL. (SEE REFERENCE DOCUMENT (2).

    A. DTMs SHOWN ON SHEETS 3 & 4 PROCESS SENSOR INPUTS FOR MSIV ISOLATION TRIP LOGIC.

    B. DTMs SHOWN ON SHEETS 5 & 6 PROCESS SENSOR INPUTS FOR ECCS ISOLATION TRIP LOGIC.

    C. DTMs SHOWN ON SHEETS 7 & 10 PROCESS SENSOR INPUTS FOR AUXILIARY ESF ISOLATION TRIP LOGIC.

    D. TLUs AND OLUs SHOWN ON SHEET 3 AND SHEET 4 PROCESS 2-OUT-OF-4 COINCIDENCE LOGIC FOR MSIV CLOSURE TRIP.

    E. SLUs SHOWN ON SHEETS 5 & 6 PROCESS 2-OUT-OF-4 COINCIDENCE LOGIC FOR ECCS ISOLATION.

    F. SLUs SHOWN ON SHEETS 7 & 10 PROCESS 2-OUT-OF 4 COINCIDENCE LOGIC FOR AUXILIARY ESF ISOLATION.

18. RMUs, MUX, EWS AND NEWS ARE PART OF THE MULTIPLEXING SYSTEM (H23).

19. ALL INSTRUMENT LINES ARE 20A-SS (STAINLESS STEEL) SCHEDULE 40, SAMPLING LINES ARE 32A-SS SCHEDULE 40.

REFERENCES

		MPL NO
1.	REACTOR CORE ISOLATION COOLING SYSTEM P&ID	E51-1010
2.	NUCLEAR BOILER SYSTEM P&ID	B21-1010
3.	REACTOR WATER CLEANUP SYSTEM P&ID	G31-1010
4.	SAMPLING SYSTEM P&ID	P91-1010
5.	PROCESS RADIATION MONITORING SYSTEM IED	D11-1040
6.	RADWASTE SYSTEM P&ID	K17-1010
7.	INSTRUMENT AIR SYSTEM P&ID	P52-1010
8.	ESSENTIAL MULTIPLEXING SYSTEM IBD	H23-1030
9.	LEAK DETECTION & ISOLATION SYSTEM IBD	E31-1030
10.	REACTOR PROTECTION SYSTEM IED	C71-1040
11.	STANDBY LIQUID CONTROL SYSTEM IBD	C41-1030
12.	SAFETY SYSTEM & LOGIC CONTROL DS	A32-5280
13.	PERFORMANCE MONITORING & CONTROL SYSTEM IED	C91-1010
14.	NEUTRON MONITORING SYSTEM IED	C51-1010
15.	SUPPRESSION POOL CLEAN-UP SYSTEM P&ID	G51-1010
16.	REACTOR BUILDING WATER CLEAN-UP SYSTEM P&ID	P21-1010
17.	HVAC NORMAL COOLING WATER SYSTEM P&ID	P24-1010
18.	STANDBY GAS TREATMENT SYSTEM P&ID	T22-1010
19.	ATMOSPHERIC CONTROL SYSTEM P&ID	T31-1010
20.	FLAMMABILITY CONTROL SYSTEM P&ID	T48-1010
21.	HEATING, VENTILATING & AIR CONDITIONING P&ID	U41-1010

SUPPORTING DOCUMENTS

		MPL NO
1.	PIPING AND INSTRUMENT DIAGRAM SYMBOLS	A10-3030
2.	PROCESS INSTRUMENTATION	A11-3030
3.	GROUP CLASSIFICATION & CONTAINMENT ISOLATION DIAG	A11-1030

LEGEND

SERIAL MULTIPLEXED DATA

MULTIPLE INSTRUMENT ELECTRICAL WIRING

SERIAL DATA

ABBREVIATIONS

OLU – OUTPUT LOGIC UNIT
TLU – TRIP LOGIC UNIT
DTM – DIGITAL TRIP MODULE
RMU – REMOTE MULTIPLEXING UNIT
SLU – SAFETY SYSTEM LOGIC UNIT
EWS – ESSENTIAL MULTIPLEXING SYSTEM
NEWS – NON-ESSENTIAL MULTIPLEXING SYSTEM

MPL NO. E31-1040

Figure 5.2–8 LEAK DETECTION AND ISOLATION SYSTEM IED (Sheet 1 of 10)

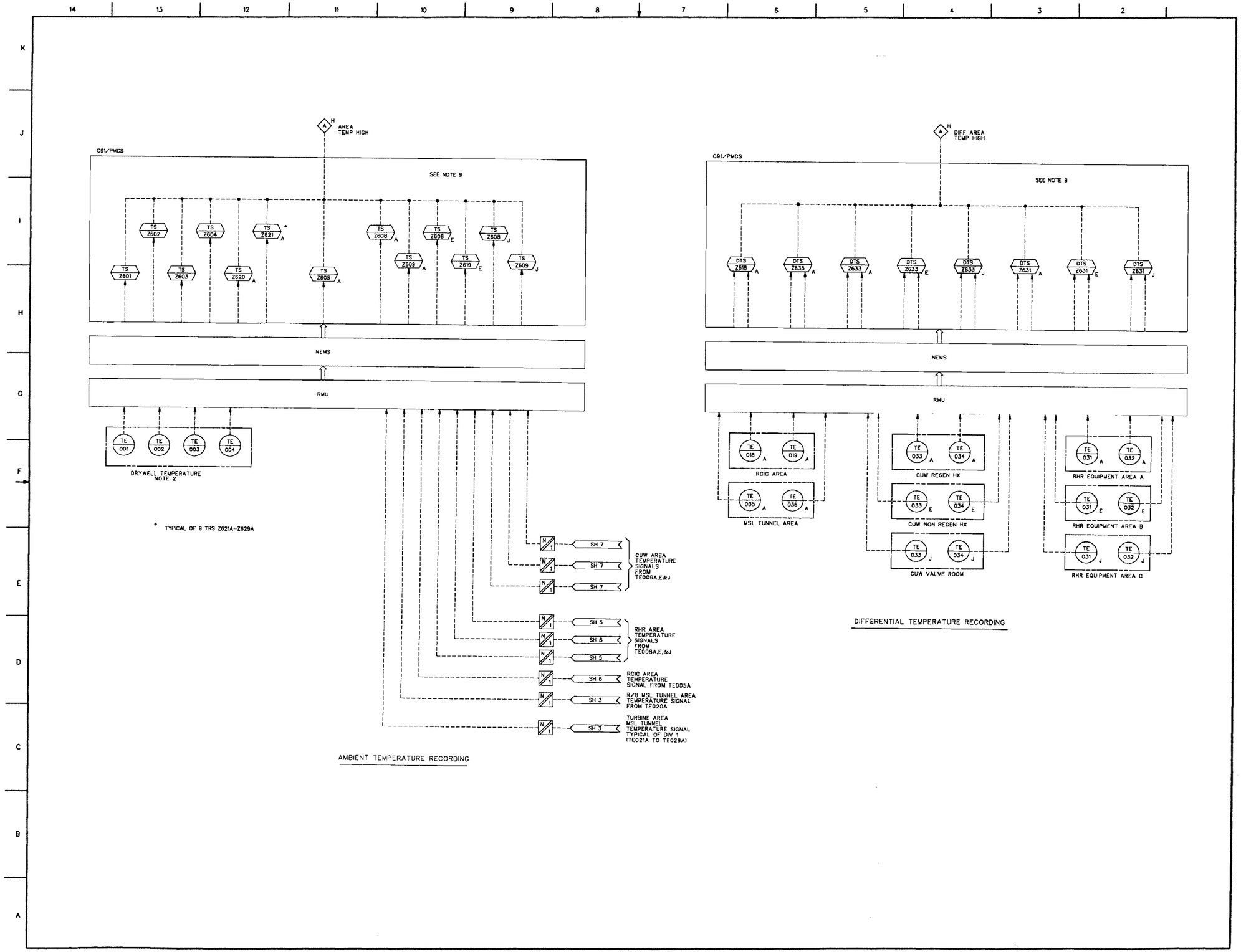

Figure 5.2–8 LEAK DETECTION AND ISOLATION SYSTEM IED (Sheet 2 of 10)

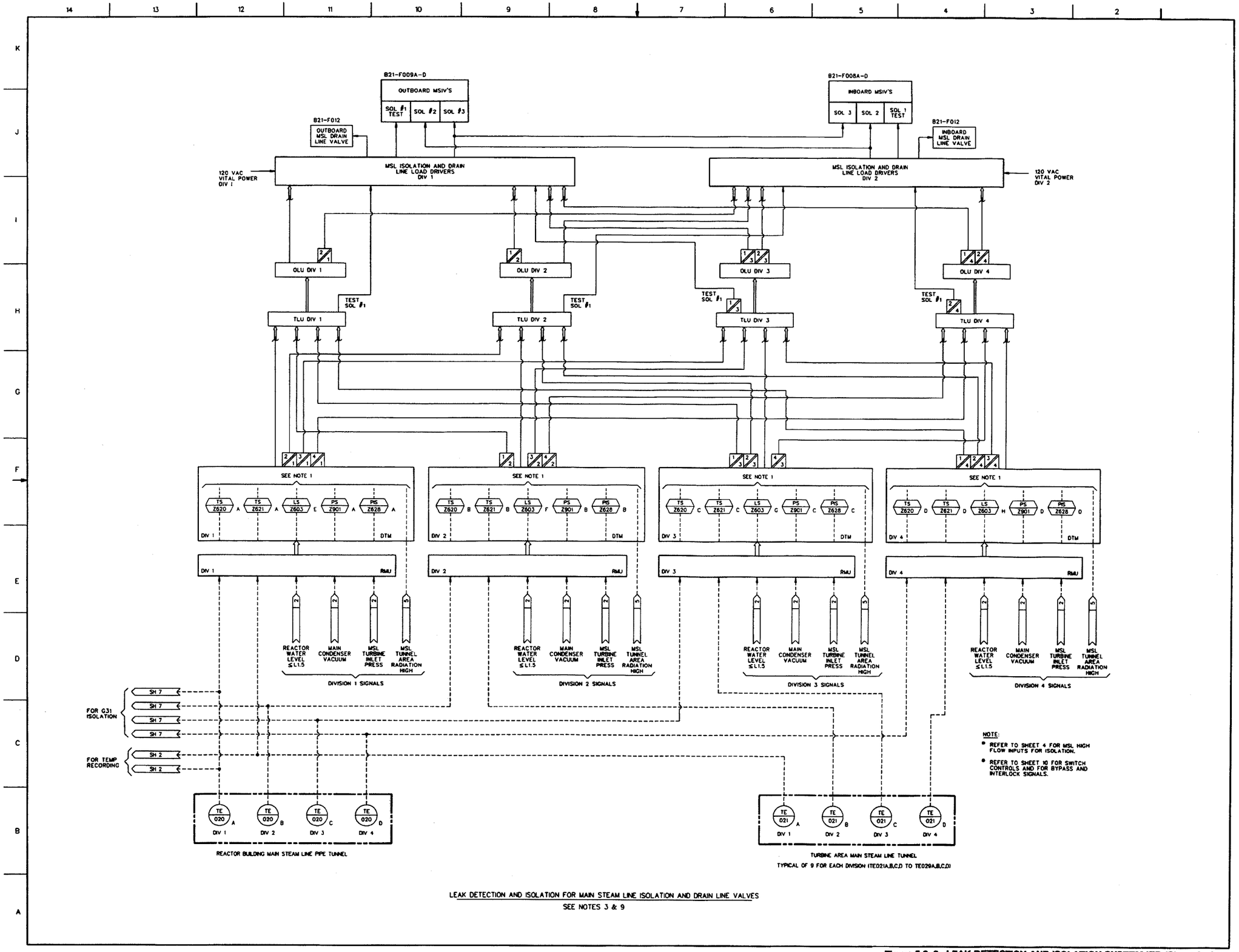

Figure 5.2–8 LEAK DETECTION AND ISOLATION SYSTEM IED (Sheet 3 of 10)

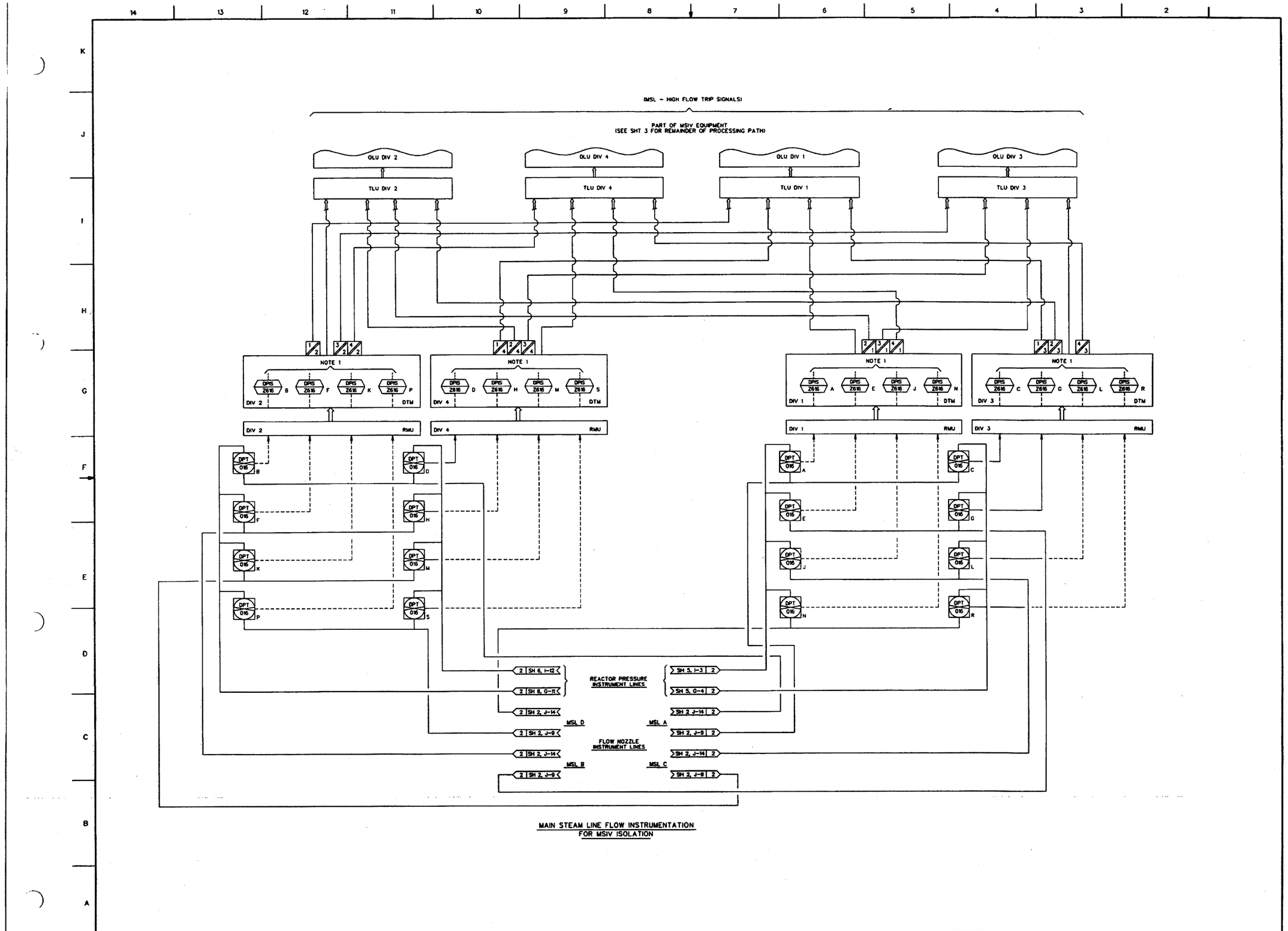

Figure 5.2–8 LEAK DETECTION AND ISOLATION SYSTEM IED (Sheet 4 of 10)

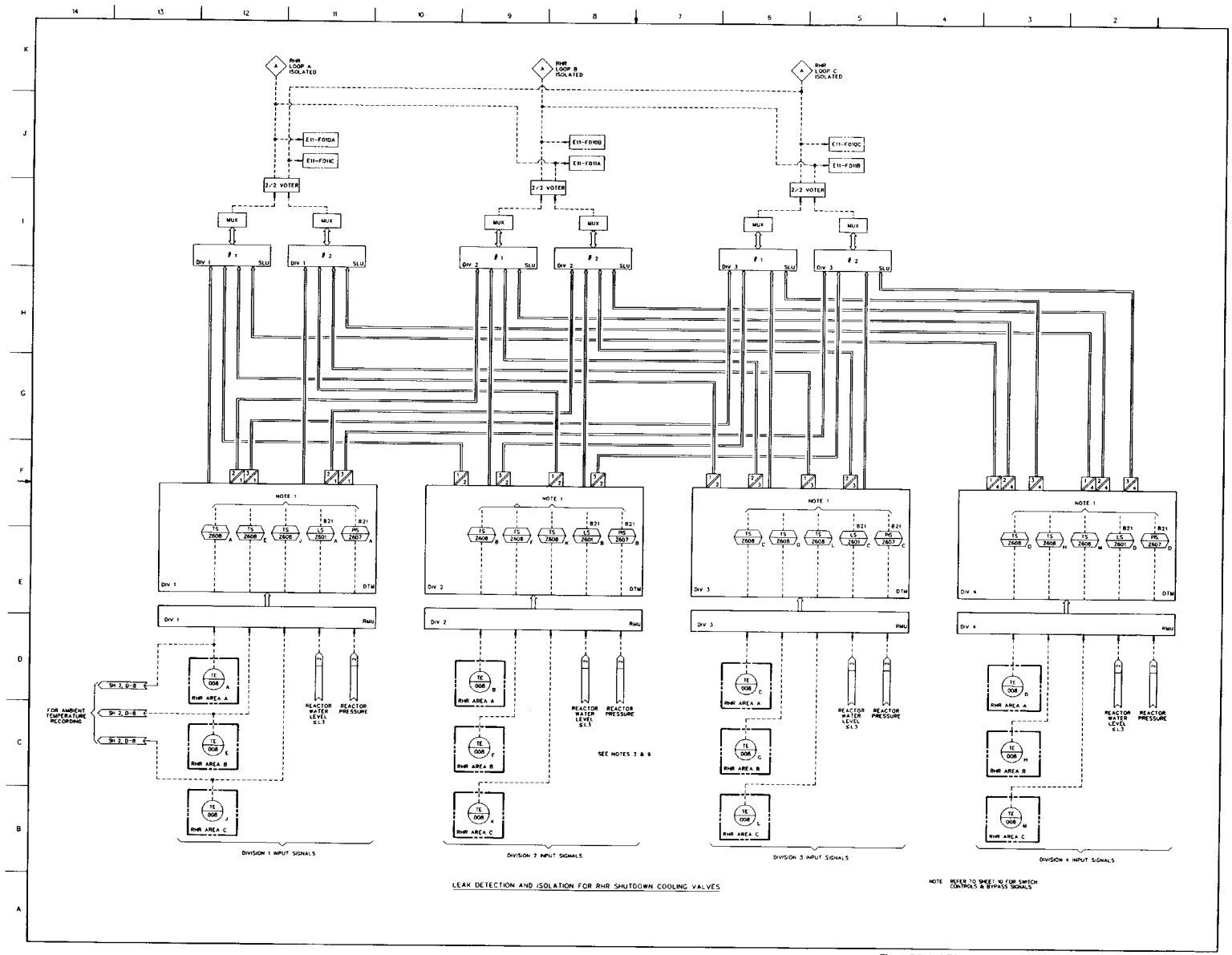

Figure 5.2-8 LEAK DETECTION AND ISOLATION SYSTEM IED (Sheet 5 of 10)

21-89

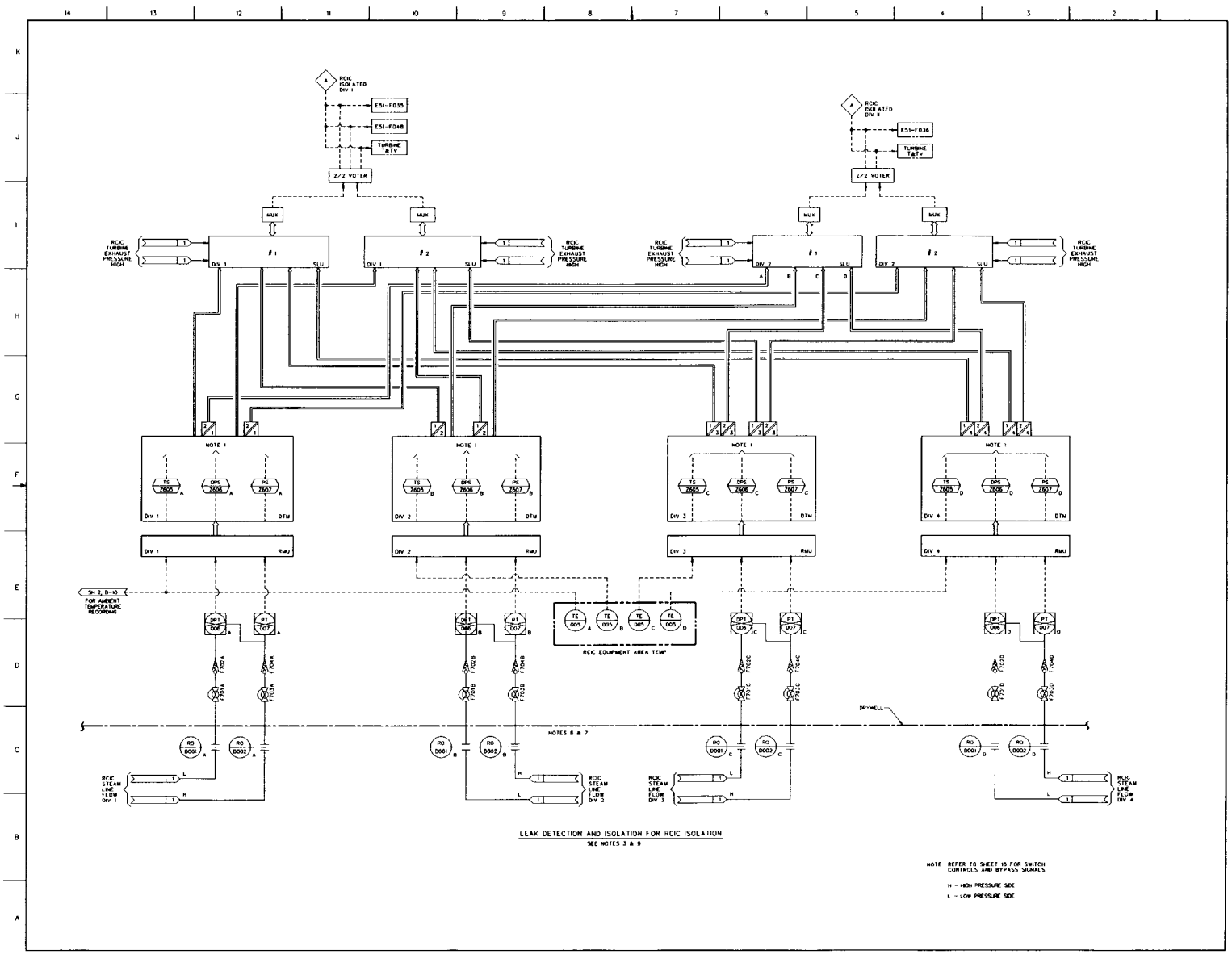

Figure 5.2–8 LEAK DETECTION AND ISOLATION SYSTEM IED (Sheet 6 of 10)

21-90

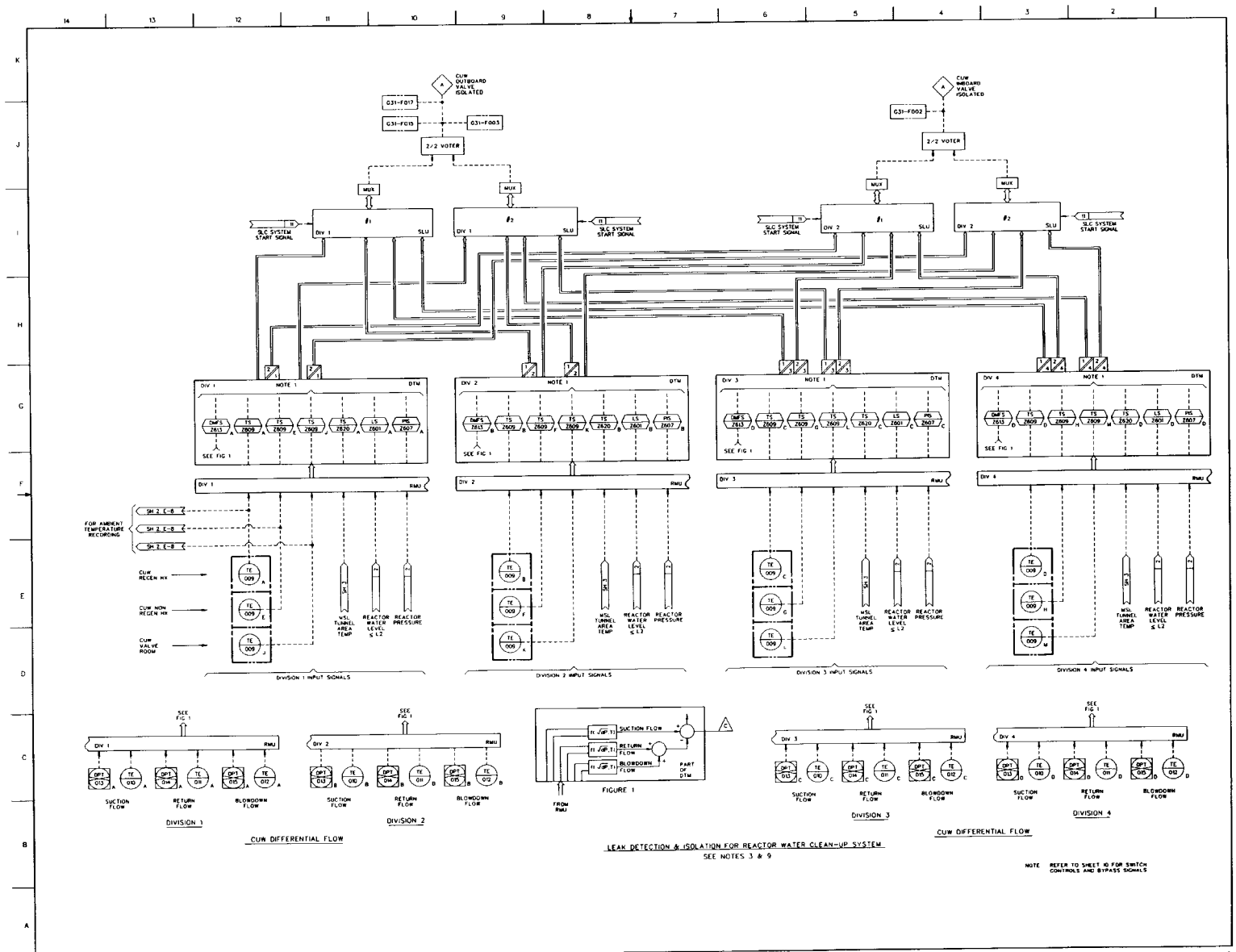

Figure 5.2-8 LEAK DETECTION AND ISOLATION SYSTEM IED (Sheet 7 of 10)

21-91

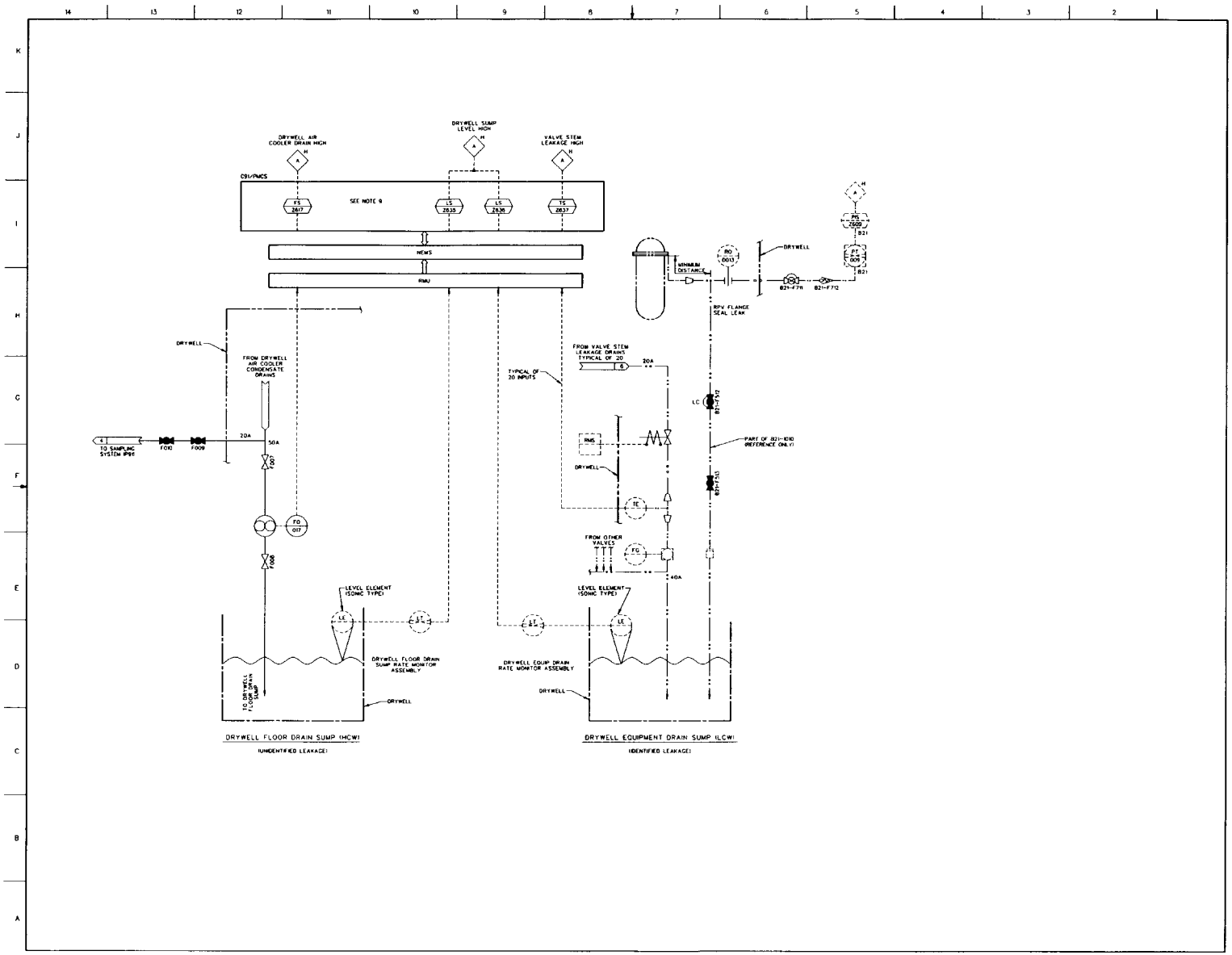

Figure 5.2–8 LEAK DETECTION AND ISOLATION SYSTEM IED (Sheet 8 of 10)

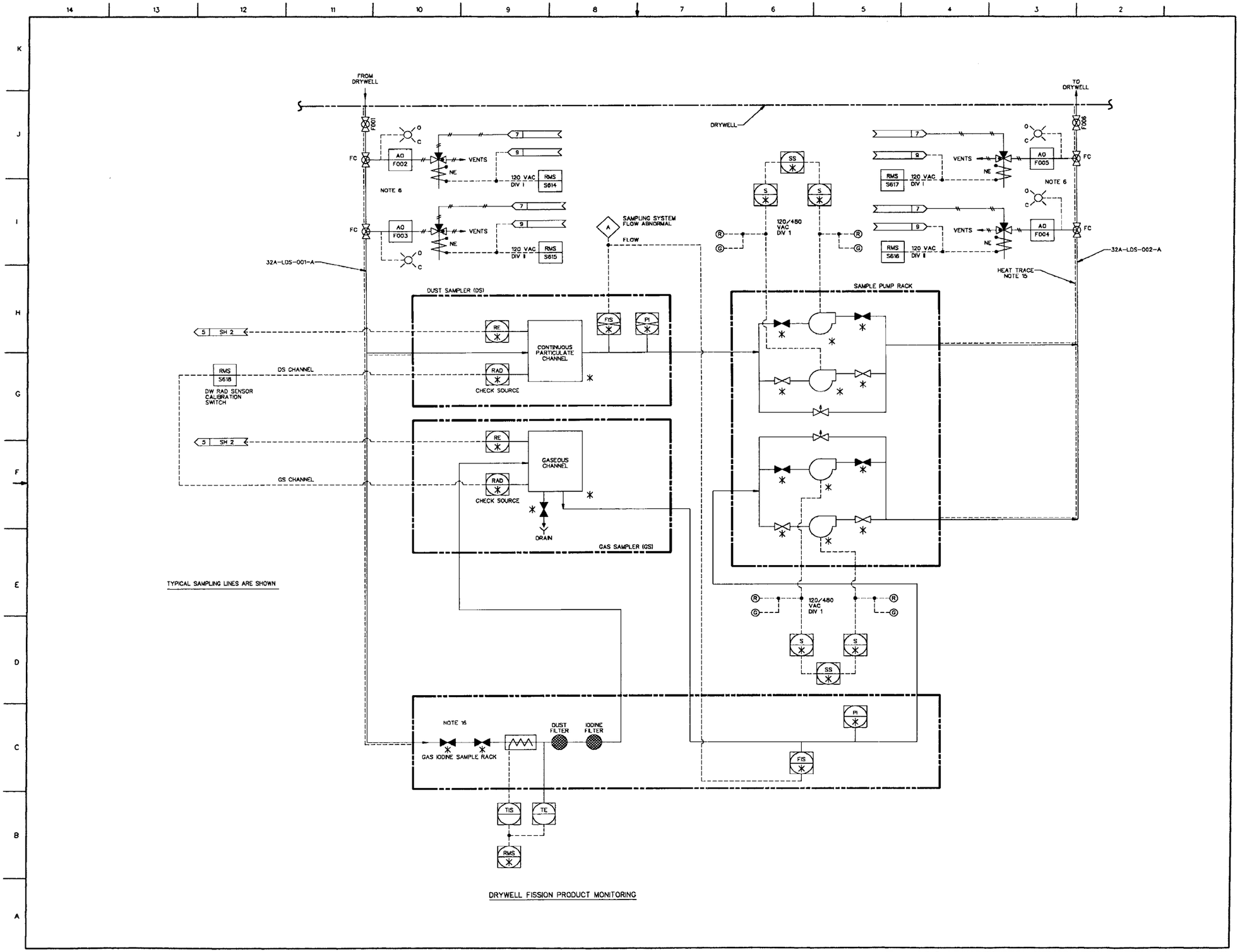

Figure 5.2–8 LEAK DETECTION AND ISOLATION SYSTEM IED (Sheet 9 of 10)

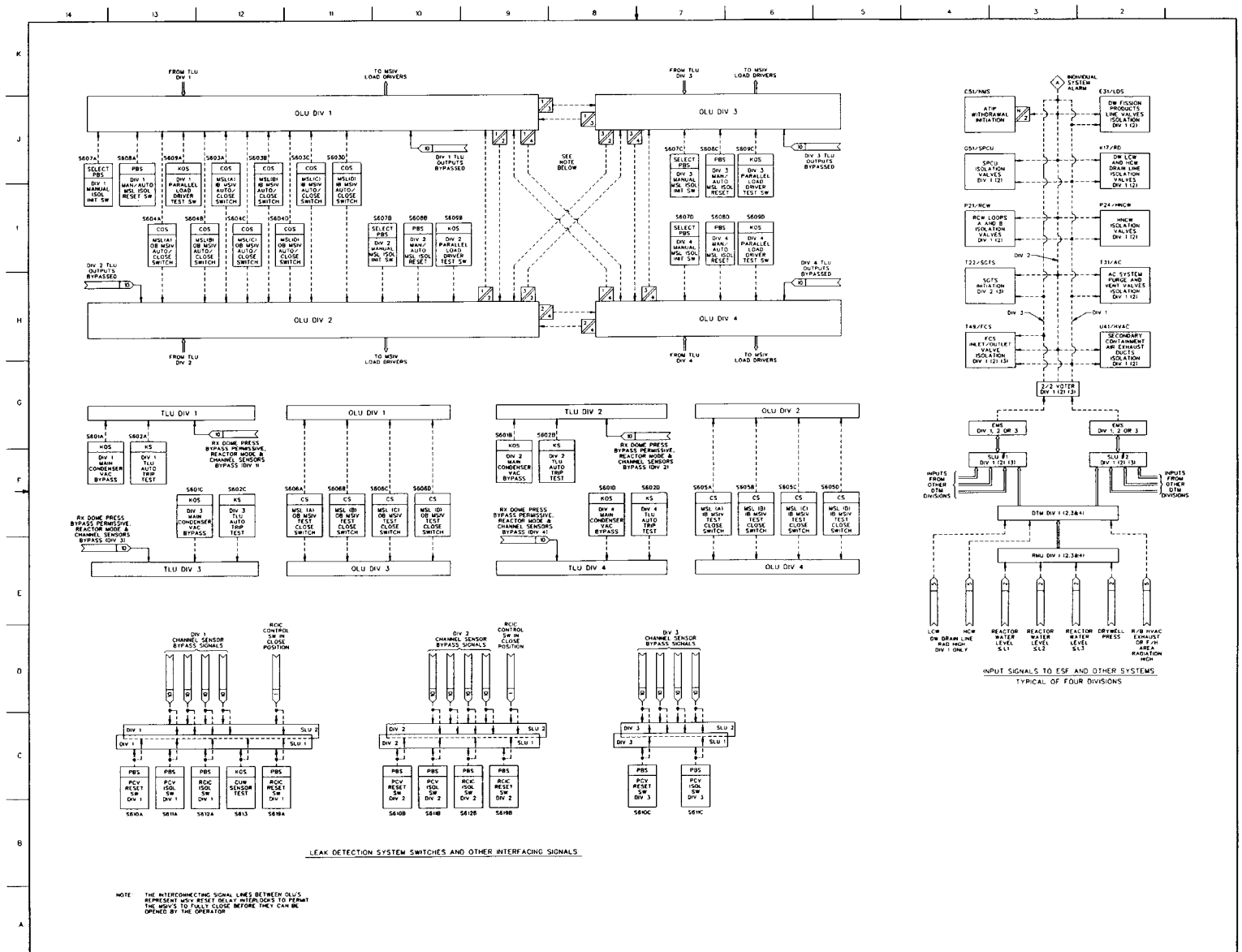

Figure 5.2-8 LEAK DETECTION AND ISOLATION SYSTEM IED (Sheet 10 of 10)

21-94

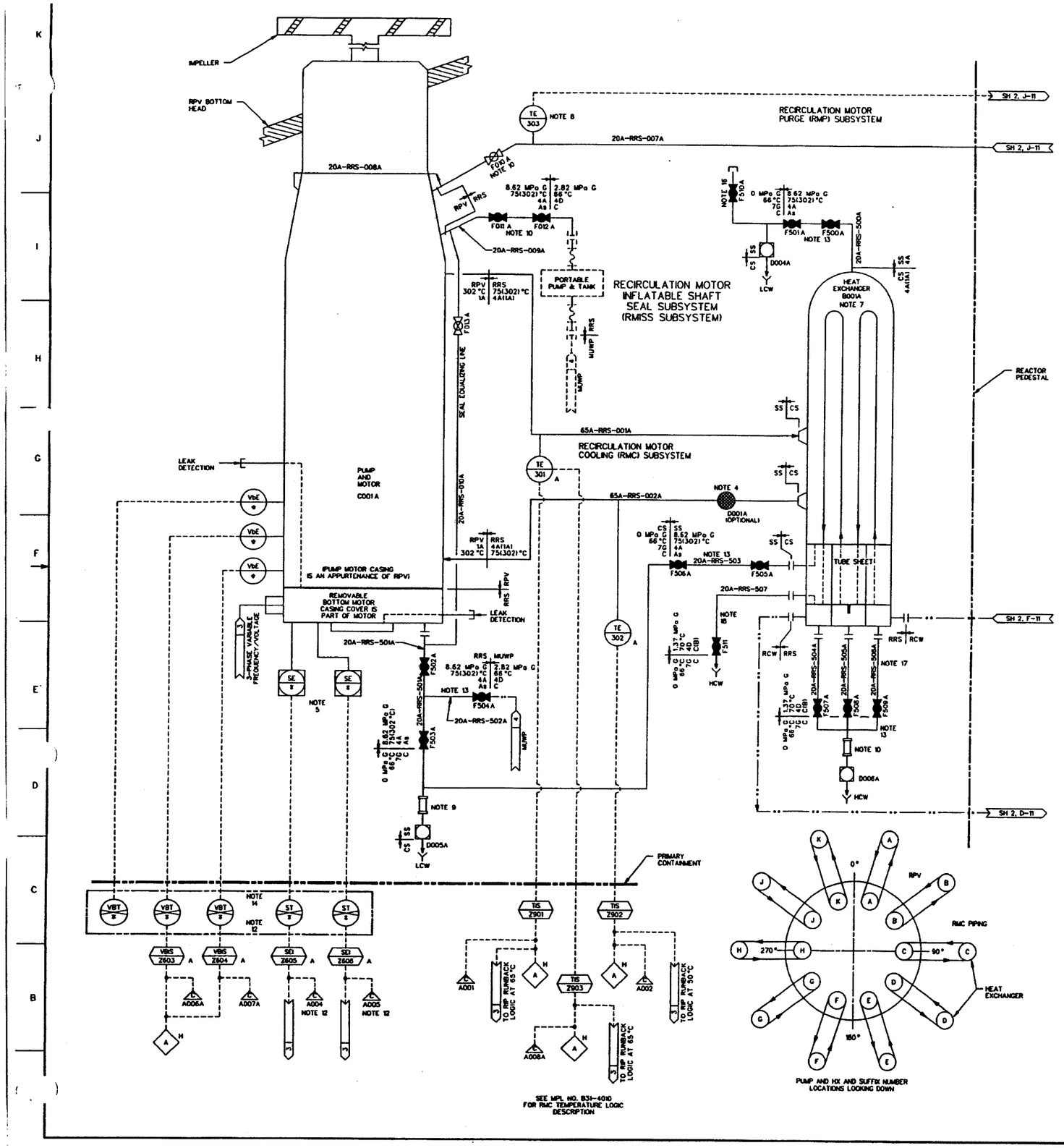

NOTES:

1. HIGH POINT VENT SHOULD BE PROVIDED FOR PURGE SUBSYSTEM, IF INTERMEDIATE HIGH POINTS EXIST.
2. CONTAINMENT ISOLATION VALVES SHALL BE LOCATED AS CLOSE AS POSSIBLE TO THE DRYWELL PENETRATION AND IN A HORIZONTAL POSITION.
3. ALL EQUIPMENT AND INSTRUMENTS SHALL BE PREFIXED BY B31 UNLESS OTHERWISE SPECIFIED.
4. FILTER D001 IS OPTIONAL IF REACTOR PRE CRITICAL FLUSHING IS ACCORDING TO A11-3070 (CE 1.A.13C). IF FILTER IS USED, SEPARATOR OR FILTER INTERNALS FOR INITIAL SYSTEM FLUSHING TO BE INSTALLED TEMPORARILY WHEN NEEDED. HOUSING IS WELDED PERMANENTLY IN LINE.
5. SPEED ELEMENTS ACCURACY SHALL CONFORM TO REFERENCE DOCUMENT 5 REQUIREMENTS.
6. D003 MAY BE EXCLUDED IF THE D002 FLOW REGULATOR IS CAPABLE OF THE COMPLETE DIFFERENTIAL PRESSURE RANGE.
7. RECIRCULATION MOTOR HEAT EXCHANGER B001 SUPPLIED WITH EACH C001 PUMP. INTERNAL TUBING CONFIGURATION OPTIONAL.
8. TE 303 LOCATED AS CLOSE AS POSSIBLE TO MOTOR CASING. TE 303 INSTALLED ONLY IN SHORTEST AND LONGEST PURGE LINES ONLY (TWO TOTAL).
9. OPTIONAL REMOVABLE SPOOL PIECE FOR DRAIN WATER SAMPLING.
10. LOCATE VALVES AS CLOSE TO MOTOR CASING AS POSSIBLE BUT BELOW RPV BOTTOM HEAD INSULATION.
11. RCW SYSTEM SHOWN IN PHANTOM, BUT THIS RCW PIPE CONFIGURATION AND COMPONENTS ARE REQUIRED BY RRS (B31) SYSTEM.
12. THE RIP SPEED AND VIBRATION ANALOG SIGNALS SHALL BE INPUT TO THE PLANT PROCESS COMPUTER AND PERMANENT CONNECTIONS FOR TEMPORARY SPECIAL RIP MOTOR ANALYTICAL AND RECORDING EQUIPMENT.
13. VENT AND DRAIN VALVES SHOULD BE CENTRALLY LOCATED FOR EACH PUMP AND HX.
14. LOCAL PANEL CONTAINING 30 VIBRATION AND 20 SPEED TRANSMITTERS, ALL SUPPLIED BY PUMP SUPPLIER.
15. ALL RRS PIPING IS SEISMIC CLASS As EXCEPT RIP HX TUBE SIDE DRAIN PIPES.
16. F510 VENT VALVE OPTIONAL FOR FASTER HX DRAINING/VENTING. IF F510 IS USED, VENT PIPE SHOULD BE ROUTED UPWARDS TO PREVENT WATER DRAINING ONTO FLOOR.
17. HX DRAIN LINES MUST BE DIFFERENT CONFIGURATION THAN SHOWN PROVIDING HX BOTTOM COVER CAN BE COMPLETELY DRAINED PRIOR TO DISASSEMBLY.
18. OPTIONAL RCW VENT.
19. PIPE WITH A DESIGN PRESSURE OF 2.82 MPa OR GREATER SHALL HAVE ITS MINIMUM WALL THICKNESS NO LESS THAN THAT OF A STANDARD WEIGHT PIPE. THICKER THAN STANDARD WEIGHT PIPE SHALL BE USED IF REQUIRED BY THE DESIGN PRESSURE OR OTHER REQUIREMENTS.
20. VALVES WITH A DESIGN PRESSURE OF 2.82 MPa OR GREATER SHALL BE A MINIMUM OF CLASS 300, OR OF A HIGHER CLASS IF REQUIRED BY THE DESIGN PRESSURE.

REFERENCE DOCUMENTS UNDER THE FOLLOWING IDENTITIES ARE TO BE USED IN CONJUNCTION WITH THIS DRAWING.

	MPL NO.
1. CONTROL ROD DRIVE SYS P&ID	C12-1010
2. REACTOR BUILDING COOLING WATER SYS P&ID	P21-1010
3. RECIRC FLOW CONTROL SYS IED	C81-1040
4. MAKE-UP WATER (PURIFIED) SYS P&ID	P11-1010
5. PIPING AND INSTRUMENT SYMBOLS DIAGRAM	A10-3030

MPL NO. B31-1010

FIGURE 5.4-4 REACTOR RECIRCULATION SYSTEM P&ID (Sheet 1 of 2)

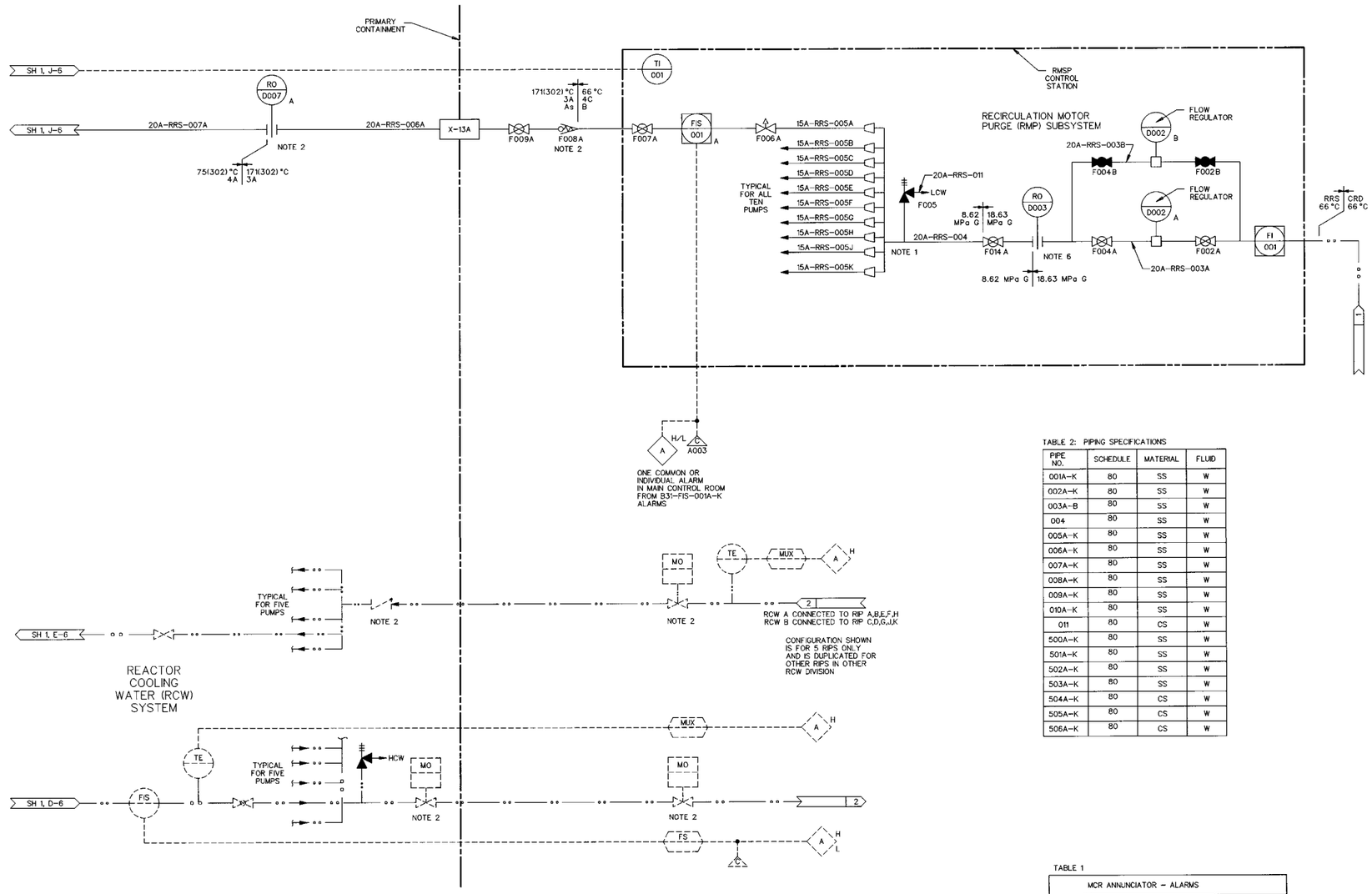

TABLE 2: PIPING SPECIFICATIONS

PIPE NO.	SCHEDULE	MATERIAL	FLUID
001A-K	80	SS	W
002A-K	80	SS	W
003A-B	80	SS	W
004	80	SS	W
005A-K	80	SS	W
006A-K	80	SS	W
007A-K	80	SS	W
008A-K	80	SS	W
009A-K	80	SS	W
010A-K	80	SS	W
011	80	CS	W
500A-K	80	SS	W
501A-K	80	SS	W
502A-K	80	SS	W
503A-K	80	SS	W
504A-K	80	CS	W
505A-K	80	CS	W
506A-K	80	CS	W

TABLE 1

MCR ANNUNCIATOR - ALARMS		
FUNCTION	PRIMARY SENSOR	SET POINT
RMHX PRIMARY SIDE INLET WATER TEMP HIGH	TE301	60 °C
RMHX PRIMARY SIDE OUTLET WATER TEMP HIGH	TE302	45 °C
RIP VIBRATION HIGH	VBE	7 mm/s
RIP VIBRATION HIGH	VBE	7 mm/s
RIP SEAL PURGE FLOW/ PRESSURE HIGH/LOW	FIS001	0.78-1.02 LITERS/min
RMHX SEC COOL WATER OUTLET FLOW HIGH/LOW	SEE P21	SEE P21
RMHX SEC COOL WATER INLET/OUTLET HIGH TEMP	SEE P21	SEE P21

FIGURE 5.4-4 REACTOR RECIRCULATION SYSTEM P&ID (Sheet 2 of 2)

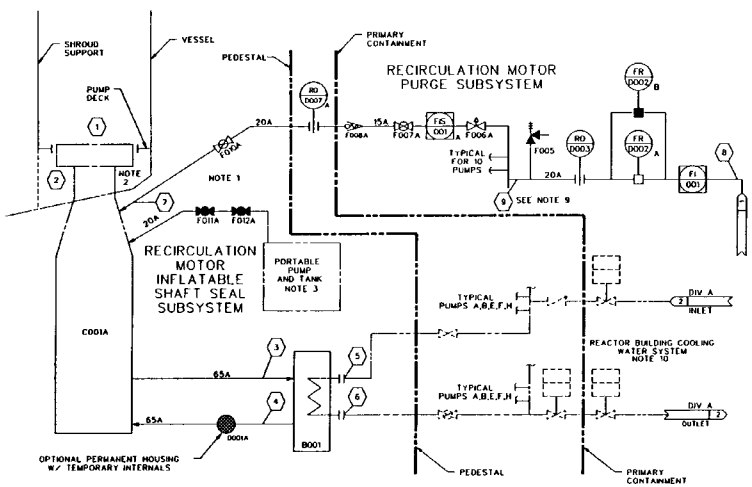

RECIRCULATION MOTOR COOLING SUBSYSTEM
REPEATED FOR PUMPS C,D,G,J,K

MODE "A1" REACTOR NORMAL OPERATION (10 PUMPS OPERATING)
ALL PUMPS ARE AT SAME SPEED
CORE FLOW = 111% -- RATED DESIGN
PUMP SPEED ≤ 100% OF RATED (NOTE 6) SEE NOTE 5

POSITION	1	2	3	4	5	6	7	8
FLOW m^3/h	7700	7700	8	8	30 Max	30 Max	0.78/1.02 NOTES 4&11	7.8/10.2 NOTES 4&11
TEMP (°C)	279	279	55	39	35		30/70	40/60
PRESS MPa A	7.75	7.54	7.65	7.63	ΔP = 0.098 Max			15.30
	TDH=40.0 m							
AVAILABLE NPSH (m)	121							

MODE "A2" REACTOR NORMAL OPERATION (10 PUMPS OPERATING)
ALL PUMPS ARE AT SAME SPEED
CORE FLOW = 100% -- RATED DESIGN
PUMP SPEED ≤ 90% OF RATED (NOTE 6) SEE NOTE 5

POSITION	1	2	3	4	5	6	7	8
FLOW m^3/h	6912	6912	7	7	30 Max	30 Max	0.78/1.02 NOTES 4&11	7.8/10.2 NOTES 4&11
TEMP (°C)	278	278	49	38	35		30/70	40/60
PRESS MPa A	7.25	7.49	7.59	7.57	ΔP = 0.098 Max			15.30
	TDH=32.6 m							
AVAILABLE NPSH (m)	134							

MODE "B1" REACTOR NORMAL OPERATION (9 PUMPS OPERATING)
ONE PUMP OUT OF SERVICE
CORE FLOW = 100% -- (RUNNING PUMP DATA)
PUMP SPEED ≤ 100% OF RATED (NOTE 6) SEE NOTE 5

POSITION	1	2	3	4	5	6	7	8
FLOW m^3/h	8291	8291	8	8	30 Max	30 Max	0.78/1.02 NOTES 4&11	7.8/10.2 NOTES 4&11
TEMP (°C)	278	278	55	39	35		30/70	40/60
PRESS MPa A	7.25	7.51	7.59	7.57	ΔP = 0.098 Max			15.30
	TDH=35.8 m							
AVAILABLE NPSH (m)	134							

NOTES:

1. ALL VALVES SHOWN IN THEIR NORMAL PLANT OPERATING POSITION AND ARE IN THE SAME POSITION FOR ALL OPERATING MODES
2. THE PURGE FLOW (RMP) 7 FLOWS IN TO THE REACTOR AT 2.
3. THE RECIRCULATION MOTOR INFLATABLE SHAFT SEAL SUBSYSTEM IS USED ONLY DURING SHUTDOWN.
4. XX/YY MEANS MIN/MAX CONDITIONS.
5. VALUES GIVEN FOR POSITION 1-7 ARE FOR EACH ONE OF THE PUMPS OPERATING IN THE DEFINED MODE CONDITION (9 OR 10 PUMPS OPERATING).
6. PUMP RATED SPEED ASSUMED AT 157.08 rad/s.
7. THIS VALUE IS MAXIMUM REVERSE FLOW.
8. TDH VALUES INCLUDE 5 PERCENT MARGIN.
9. POSITION "9" CREATED EXCLUSIVELY FOR DEFINING DESIGN PRESSURE/TEMPERATURE CONDITIONS (NOT PROCESS CONDITIONS).
10. RCW (P21) FOR RP'S C,D,G,J,K, IS SIMILAR TO RP'S A,B,E,F,H.
11. POSITIONS 7 & 8 FLOW IS Liter/min FOR ALL MODES.

REFERENCE DOCUMENTS UNDER THE FOLLOWING IDENTITIES ARE TO BE USED IN CONJUNCTION WITH THIS DRAWING.

	MPL NO
1. CONTROL ROD DRIVE SYS, PFD	C12-1020
2. REAC BUILDING COOLING WATER SYSTEM, PFD	P21-1020
3. REAC RECIRC SYS P&ID	B31-1010
4. PIPING AND INSTRUMENT SYMBOLS DIAGRAM	A10-3030

MODE "B2" REACTOR NORMAL OPERATION -- (9 PUMPS OPERATING)
DATA SHOWN FOR THE PUMP OUT OF SERVICE
CORE FLOW = 100%
PUMP SPEED = 0.0% OF RATED SEE NOTE 5

POSITION	1	2	3	4	5	6	7	8
FLOW m^3/h	-5370 NOTE 7	-5370 NOTE 7	NAT. CIRC.		30 Max	30 Max	0.78/1.02 NOTES 4&11	7.8/10.2 NOTES 4&11
TEMP (°C)	278	278			35		30/70	40/60
PRESS MPa A	7.25	7.51	7.59	7.57	ΔP = 0.098 Max			15.30
AVAILABLE NPSH (m)	134							

MODE "C" REACTOR HOT STANDBY -- (10 PUMPS OPERATING)
ALL PUMPS ARE AT SAME SPEED
CORE FLOW = 32.2%
PUMP SPEED = 47.12 rad/s SEE NOTE 5

POSITION	1	2	3	4	5	6	7	8
FLOW m^3/h	2295	2295	2	2	30 Max	30 Max	0.78/1.02 NOTES 4&11	7.8/10.2 NOTES 4&11
TEMP (°C)	282	282	38	35	35		30/70	40/60
PRESS MPa A	6.70	6.73	6.89	6.86	ΔP = 0.098 Max			15.30
	TDH= ≥ 3.8m							
AVAILABLE NPSH (m)	16							

MODE "D" REACTOR COLD STARTUP -- (10 PUMPS OPERATING)
ALL PUMPS ARE AT SAME SPEED
CORE FLOW = 32.2%
PUMP SPEED = 47.12 rad/s SEE NOTE 5

POSITION	1	2	3	4	5	6	7	8
FLOW m^3/h	2250	2250	2	2	30 Max	30 Max	0.78/1.02 NOTES 4&11	7.8/10.2 NOTES 4&11
TEMP (°C)	<100	<100	38	35	35		10/70	40/60
PRESS MPa A	0.18	0.22	0.18	0.22	ΔP = 0.098 Max			15.30
	TDH= ≥ 3.8m							
AVAILABLE NPSH (m)	20							

MPL NO B31-1020

FIGURE 5.4-5 REACTOR RECIRCULATION SYSTEM PFD

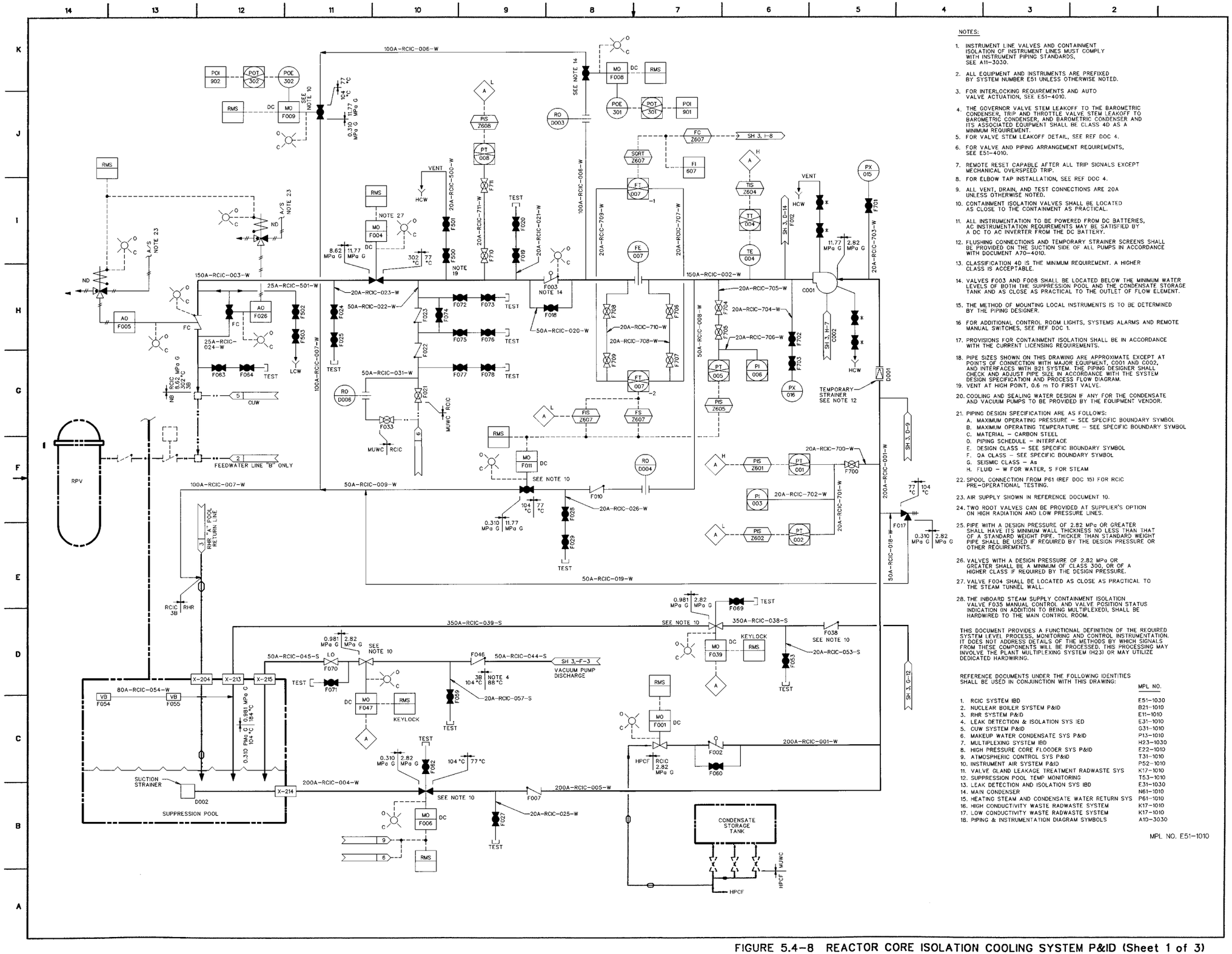

NOTES:

1. INSTRUMENT LINE VALVES AND CONTAINMENT ISOLATION OF INSTRUMENT LINES MUST COMPLY WITH INSTRUMENT PIPING STANDARDS, SEE A11-3030.
2. ALL EQUIPMENT AND INSTRUMENTS ARE PREFIXED BY SYSTEM NUMBER E51 UNLESS OTHERWISE NOTED.
3. FOR INTERLOCKING REQUIREMENTS AND AUTO VALVE ACTUATION, SEE E51-4010.
4. THE GOVERNOR VALVE STEM LEAKOFF TO THE BAROMETRIC CONDENSER, TRIP AND THROTTLE VALVE STEM LEAKOFF TO BAROMETRIC CONDENSER, AND BAROMETRIC CONDENSER AND ITS ASSOCIATED EQUIPMENT SHALL BE CLASS 4D AS A MINIMUM REQUIREMENT.
5. FOR VALVE STEM LEAKOFF DETAIL, SEE REF DOC 4.
6. FOR VALVE AND PIPING ARRANGEMENT REQUIREMENTS, SEE E51-4010.
7. REMOTE RESET CAPABLE AFTER ALL TRIP SIGNALS EXCEPT MECHANICAL OVERSPEED TRIP.
8. FOR ELBOW TAP INSTALLATION, SEE REF DOC 4.
9. ALL VENT, DRAIN, AND TEST CONNECTIONS ARE 20A UNLESS OTHERWISE NOTED.
10. CONTAINMENT ISOLATION VALVES SHALL BE LOCATED AS CLOSE TO THE CONTAINMENT AS PRACTICAL.
11. ALL INSTRUMENTATION TO BE POWERED FROM DC BATTERIES, AC INSTRUMENTATION REQUIREMENTS MAY BE SATISFIED BY A DC TO AC INVERTER FROM THE DC BATTERY.
12. FLUSHING CONNECTIONS AND TEMPORARY STRAINER SCREENS SHALL BE PROVIDED ON THE SUCTION SIDE OF ALL PUMPS IN ACCORDANCE WITH DOCUMENT A70-4010.
13. CLASSIFICATION 4D IS THE MINIMUM REQUIREMENT. A HIGHER CLASS IS ACCEPTABLE.
14. VALVES F003 AND F008 SHALL BE LOCATED BELOW THE MINIMUM WATER LEVELS OF BOTH THE SUPPRESSION POOL AND THE CONDENSATE STORAGE TANK AND AS CLOSE AS PRACTICAL TO THE OUTLET OF FLOW ELEMENT.
15. THE METHOD OF MOUNTING LOCAL INSTRUMENTS IS TO BE DETERMINED BY THE PIPING DESIGNER.
16. FOR ADDITIONAL CONTROL ROOM LIGHTS, SYSTEMS ALARMS AND REMOTE MANUAL SWITCHES, SEE REF DOC 1.
17. PROVISIONS FOR CONTAINMENT ISOLATION SHALL BE IN ACCORDANCE WITH THE CURRENT LICENSING REQUIREMENTS.
18. PIPE SIZES SHOWN ON THIS DRAWING ARE APPROXIMATE EXCEPT AT POINTS OF CONNECTION WITH MAJOR EQUIPMENT, C001 AND C002, AND INTERFACES WITH B21 SYSTEM. THE PIPING DESIGNER SHALL CHECK AND ADJUST PIPE SIZE IN ACCORDANCE WITH THE SYSTEM DESIGN SPECIFICATION AND PROCESS FLOW DIAGRAM.
19. VENT AT HIGH POINT, 0.6 m TO FIRST VALVE.
20. COOLING AND SEALING WATER DESIGN IF ANY FOR THE CONDENSATE AND VACUUM PUMPS TO BE PROVIDED BY THE EQUIPMENT VENDOR.
21. PIPING DESIGN SPECIFICATION ARE AS FOLLOWS:
    A. MAXIMUM OPERATING PRESSURE – SEE SPECIFIC BOUNDARY SYMBOL
    B. MAXIMUM OPERATING TEMPERATURE – SEE SPECIFIC BOUNDARY SYMBOL
    C. MATERIAL – CARBON STEEL
    D. PIPING SCHEDULE – INTERFACE
    E. DESIGN CLASS – SEE SPECIFIC BOUNDARY SYMBOL
    F. QA CLASS – SEE SPECIFIC BOUNDARY SYMBOL
    G. SEISMIC CLASS – As
    H. FLUID – W FOR WATER, S FOR STEAM
22. SPOOL CONNECTION FROM P61 (REF DOC 15) FOR RCIC PRE-OPERATIONAL TESTING.
23. AIR SUPPLY SHOWN IN REFERENCE DOCUMENT 10.
24. TWO ROOT VALVES CAN BE PROVIDED AT SUPPLIER'S OPTION ON HIGH RADIATION AND LOW PRESSURE LINES.
25. PIPE WITH A DESIGN PRESSURE OF 2.82 MPa OR GREATER SHALL HAVE ITS MINIMUM WALL THICKNESS NO LESS THAN THAT OF A STANDARD WEIGHT PIPE. THICKER THAN STANDARD WEIGHT PIPE SHALL BE USED IF REQUIRED BY THE DESIGN PRESSURE OR OTHER REQUIREMENTS.
26. VALVES WITH A DESIGN PRESSURE OF 2.82 MPa OR GREATER SHALL BE A MINIMUM OF CLASS 300, OR OF A HIGHER CLASS IF REQUIRED BY THE DESIGN PRESSURE.
27. VALVE F004 SHALL BE LOCATED AS CLOSE AS PRACTICAL TO THE STEAM TUNNEL WALL.
28. THE INBOARD STEAM SUPPLY CONTAINMENT ISOLATION VALVE F035 MANUAL CONTROL AND VALVE POSITION STATUS INDICATION (IN ADDITION TO BEING MULTIPLEXED), SHALL BE HARDWIRED TO THE MAIN CONTROL ROOM.

THIS DOCUMENT PROVIDES A FUNCTIONAL DEFINITION OF THE REQUIRED SYSTEM LEVEL PROCESS, MONITORING AND CONTROL INSTRUMENTATION. IT DOES NOT ADDRESS DETAILS OF THE METHODS BY WHICH SIGNALS FROM THESE COMPONENTS WILL BE PROCESSED. THIS PROCESSING MAY INVOLVE THE PLANT MULTIPLEXING SYSTEM (H23) OR MAY UTILIZE DEDICATED HARDWIRING.

REFERENCE DOCUMENTS UNDER THE FOLLOWING IDENTITIES SHALL BE USED IN CONJUNCTION WITH THIS DRAWING:

	MPL NO.
1. RCIC SYSTEM IBD	E51-1030
2. NUCLEAR BOILER SYSTEM P&ID	B21-1010
3. RHR SYSTEM P&ID	E11-1010
4. LEAK DETECTION & ISOLATION SYS IED	E31-1010
5. CUW SYSTEM P&ID	G31-1010
6. MAKEUP WATER CONDENSATE SYS P&ID	P13-1010
7. MULTIPLEXING SYSTEM IBD	H23-1030
8. HIGH PRESSURE CORE FLOODER SYS P&ID	E22-1010
9. ATMOSPHERIC CONTROL SYS P&ID	T31-1010
10. INSTRUMENT AIR SYSTEM P&ID	P52-1010
11. VALVE GLAND LEAKAGE TREATMENT RADWASTE SYS	K17-1010
12. SUPPRESSION POOL TEMP MONITORING	T53-1010
13. LEAK DETECTION AND ISOLATION SYS IBD	E31-1030
14. MAIN CONDENSER	N61-1010
15. HEATING STEAM AND CONDENSATE WATER RETURN SYS	P61-1010
16. HIGH CONDUCTIVITY WASTE RADWASTE SYSTEM	K17-1010
17. LOW CONDUCTIVITY WASTE RADWASTE SYSTEM	K17-1010
18. PIPING & INSTRUMENTATION DIAGRAM SYMBOLS	A19-3030

MPL NO. E51-1010

FIGURE 5.4-8 REACTOR CORE ISOLATION COOLING SYSTEM P&ID (Sheet 1 of 3)

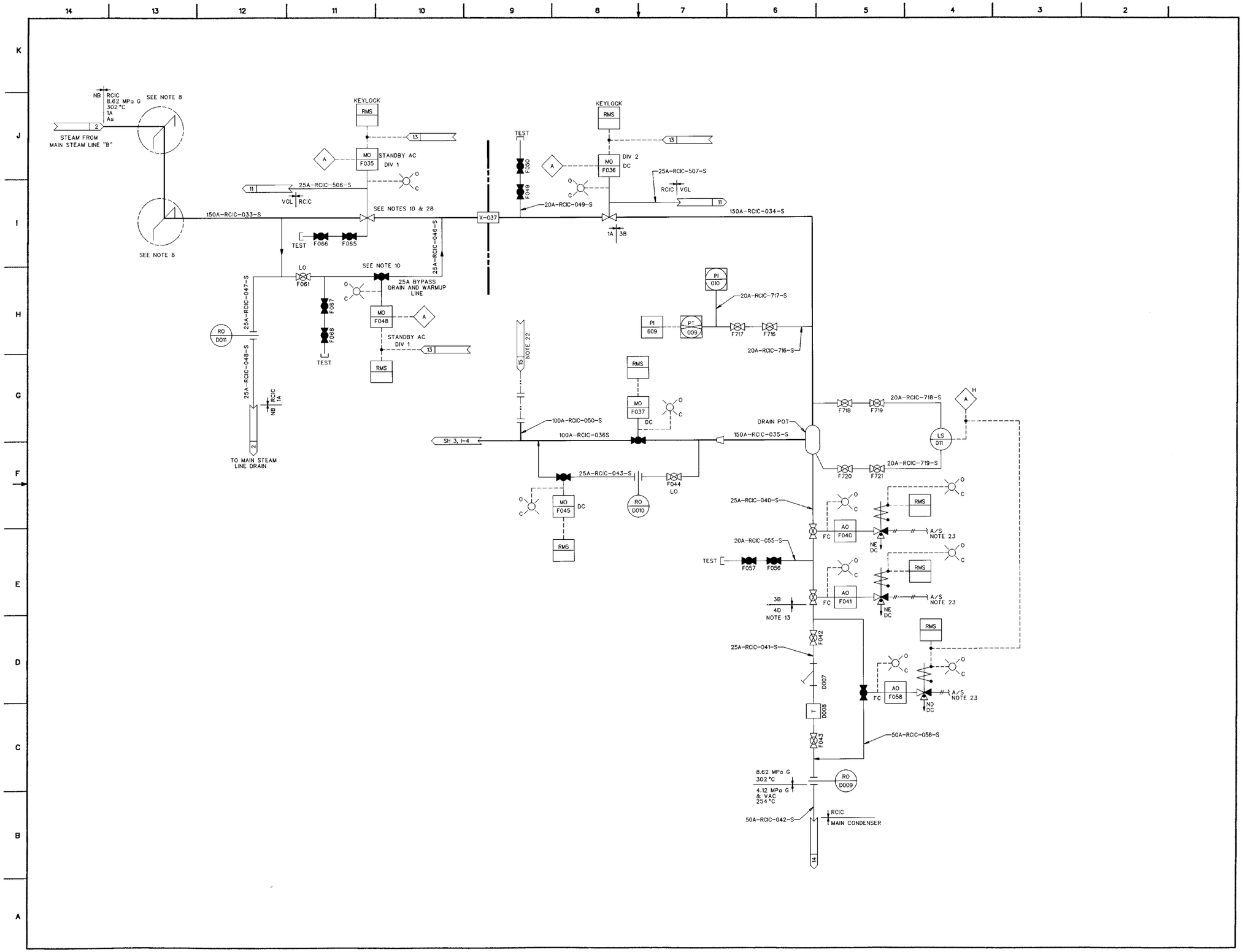

FIGURE 5.4-8 REACTOR CORE ISOLATION COOLING SYSTEM P&ID (Sheet 2 of 3)

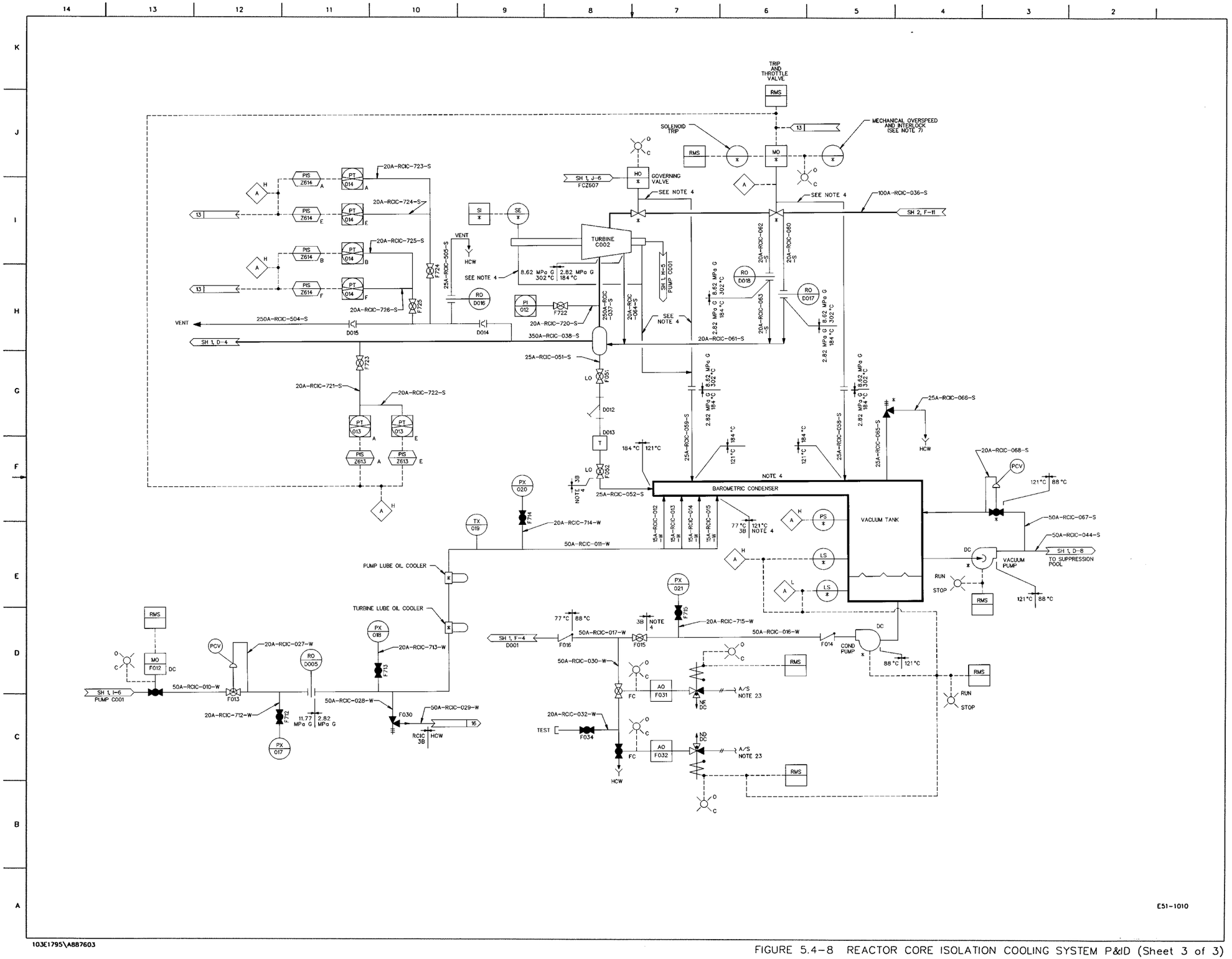

103E1795\A887603

FIGURE 5.4-8 REACTOR CORE ISOLATION COOLING SYSTEM P&ID (Sheet 3 of 3)