HITACHI

GE Hitachi Nuclear Energy

25A5675AP
Revision 5
November 2010

ABWR
Design Control Document
Tier 2

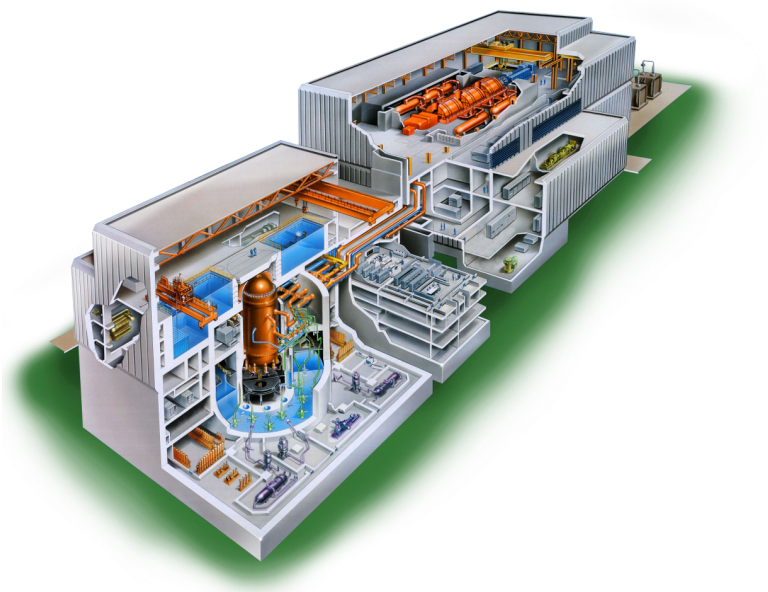

Chapter 12

Radiation Protection

Copyright 1994, 2010, GE-Hitachi Nuclear Energy Americas LLC
All Rights Reserved

Chapter 12
Table of Contents

12.0 Radiation Protection 12.1-1

12.1 Ensuring that Occupational Radiation Exposures are ALARA 12.1-1
12.1.1 Policy Considerations 12.1-1
12.1.2 Design Considerations 12.1-2
12.1.3 Operational Considerations 12.1-5
12.1.4 COL License Information 12.1-6

12.2 Radiation Sources 12.2-1
12.2.1 Contained Sources 12.2-1
12.2.2 Airborne and Liquid Sources for Environmental Consideration 12.2-8
12.2.3 COL License Information 12.2-11
12.2.4 References 12.2-11

12.3 Radiation Protection Design Features 12.3-1
12.3.1 Facility Design Features 12.3-1
12.3.2 Shielding 12.3-13
12.3.3 Ventilation 12.3-20
12.3.4 Area Radiation and Airborne Radioactivity Monitoring Instrumentation 12.3-24
12.3.5 Post-Accident Access Requirements 12.3-26
12.3.6 Post-Accident Radiation Zone Maps 12.3-27
12.3.7 COL License Information 12.3-27
12.3.8 References 12.3-28

12.4 Dose Assessment 12.4-1
12.4.1 Drywell Dose 12.4-1
12.4.2 Reactor Building Dose 12.4-4
12.4.3 Radwaste Building Dose 12.4-5
12.4.4 Turbine Building Dose 12.4-6
12.4.5 Work at Power 12.4-6
12.4.6 References 12.4-7

12.5 Health Physics Program 12.5-1
12.5.1 Operational Considerations 12.5-1
12.5.2 In-Plant and Airborne Radioactivity Monitoring 12.5-1
12.5.3 COL License Information 12.5-1

12A Appendix 12A Calculation of Airborne Radionuclides 12A-1
12A.1 Calculation of Airborne Radionuclides 12A-1
12.1.2 References 12A-4

Chapter 12
List of Tables

Table 12.2-1a Basic Reactor Data 12.2-13

Table 12.2-1b Basic Reactor Data—Material Densities (g/cm^3) 12.2-14

Table 12.2-1c Basic Reactor Data—Typical Core Exposure Distribution 12.2-15

Table 12.2-1d Basic Reactor Data—Typical Core Exposure Distribution—Axial Relative Exposure 12.2-16

Table 12.2-2 Core Boundary Neutron Fluxes 12.2-17

Table 12.2-3a Gamma Ray Source Energy Spectra— Gamma Ray Sources in the Core During Operation 12.2-18

Table 12.2-3b Gamma Ray Source Energy Spectra— Post-Operation Gamma Sources in the Core(pJ/W.s) 12.2-18

Table 12.2-3c Gamma Ray Source Energy Spectra—Gamma Ray Source External to the Core During Operation 12.2-19

Table 12.2-4a Gamma Ray and Neutron Fluxes Outside the Vessel Wall—Neutron Fluxes 12.2-20

Table 12.2-4b Gamma Ray and Neutron Fluxes Outside the Vessel Wall— Gamma Ray Energy Fluxes 12.2-20

Table 12.2-5a Radiation Sources— Radiation Sources 12.2-21

Table 12.2-5b Radiation Sources—Source Geometry 12.2-23

Table 12.2-5c Radiation Sources—Shielding Geometry in Meters 12.2-25

Table 12.2-5d Radiation Source—Pipe Chase Detail 12.2-27

Table 12.2-6 Fission Product Gamma Source Strength in the RHR Heat Exchanger 12.2-29

Table 12.2-7 Fission Product Inventory in the RHR Heat Exchanger 2 Hours After Shutdown 12.2-30

Table 12.2-8 Reactor Coolant Concentration Values Entering the RCIC Turbine 12.2-32

Table 12.2-9 CUW Filter Demineralizer 12.2-34

Table 12.2-10 Reactor Water Cleanup, Regenerative Heat Exchanger Tube Sides 12.2-35

Table 12.2-11 Reactor Water Cleanup, Non-Regenerative Heat Exchanger Tube Sides 12.2-36

Table 12.2-12 Reactor Water Cleanup, Regenerative Heat Exchanger Shell Side 12.2-37

Table 12.2-13a Liquid Radwaste Component Inventories—LCW Collector Tank 12.2-38

Table 12.2-13b Liquid Radwaste Component Inventories—LCW Filter 12.2-39

List of Tables (Continued)

Table 12.2-13c Liquid Radwaste Component Inventories—LCW Demineralizer 12.2-40

Table 12.2-13d Liquid Radwaste Component Inventories—LCW Sample Tank 12.2-41

Table 12.2-13e Liquid Radwaste Component Inventories—HCW Collector Tank 12.2-42

Table 12.2-13f Liquid Radwaste Component Inventories—HCW Demineralizer 12.2-43

Table 12.2-14 Offgas System Inventories 12.2-44

Table 12.2-15a Solid Radwaste Component Inventories CUW Backwash Receiving Tank 12.2-46

Table 12.2-15b Solid Radwaste Component Inventories CF Backwash Receiving Tank 12.2-47

Table 12.2-15c Solid Radwaste Component Inventories Phase Separator 12.2-48

Table 12.2-15d Solid Radwaste Component Inventories Spent Resin Storage Tank 12.2-49

Table 12.2-15e Solid Radwaste Component Inventories Concentrated Waste Tank 12.2-50

Table 12.2-15f Solid Radwaste Component Inventories Solids Dryer Feed Tank 12.2-51

Table 12.2-15g Solid Radwaste Component Inventories Solids Dryer (Outlet) 12.2-52

Table 12.2-15h Solid Radwaste Component Inventories Solids Dryer Pelletizer 12.2-53

Table 12.2-15i Solid Radwaste Component Inventories Solids Mist Separator (Steam) 12.2-54

Table 12.2-15j Solid Radwaste Component Inventories Solids Condenser 12.2-55

Table 12.2-15k Solid Radwaste Component Inventories Solids Drum 12.2-56

Table 12.2-16 FPC Filter Demineralizer 12.2-57

Table 12.2-17 Radioactive Sources in the Suppression Pool Cleanup System 12.2-58

Table 12.2-18a Radioactive Sources in the Control Rod Drive System 12.2-59

Table 12.2-18b Control Blade Principal Isotopes 12.2-59

Table 12.2-19 Annual Airborne Releases for Offsite Dose Evaluations (MBq) 12.2-60

Table 12.2-20 Airborne Concentrations 12.2-63

Table 12.2-21 Average Annual Doses from Airborne Releases 12.2-66

Table 12.2-22 Annual Average Liquid Releases 12.2-67

Table 12.2-23 Liquid Pathway Dose Analysis
(Assuming 5678 L/min Flow and a Dilution Factor of 10) 12.2-69

List of Tables (Continued)

Table 12.2-24 Activity Levels of the Transversing In-Core Probe System....12.2-71
Table 12.2-25 Activity Levels in the Reactor Internal Pump....12.2-71
Table 12.2-26 Activity in the Turbine Moisture Separator/Reheater....12.2-72
Table 12.2-27 Activity in the Turbine Condenser....12.2-74
Table 12.2-28 Activity in the Condenser Demineralizer....12.2-76
Table 12.2-29 Steam Jet Air Ejector Inventory....12.2-78
Table 12.2-30 Standby Gas Treatment System Inventory....12.2-80
Table 12.3-1 Computer Codes Used in Shielding Design Calculations....12.3-29
Table 12.3-2 Typical Nickel and Cobalt Content of Materials....12.3-29
Table 12.3-3 Area Radiation Monitors Reactor Building....12.3-30
Table 12.3-4 Area Radiation Monitors Control Building....12.3-31
Table 12.3-5 Area Radiation Monitors Service Building....12.3-31
Table 12.3-6 Area Radiation Monitors Radwaste Building....12.3-31
Table 12.3-7 Area Radiation Monitors Turbine Building....12.3-32
Table 12.4-38 Projected Annual Radiation Exposure....12.4-8

Chapter 12
List of Figures

Figure 12.2-1 Radiation Source Model 12.2-81

Figure 12.3-1 Reactor Building Radiation Zone Map for Full Power and Shutdown Operation at Elevation –8200 mm (B3F) 12.3-33

Figure 12.3-2 Reactor Building Radiation Zone Map for Full Power and Shutdown Operation at Elevation –1700 mm (B2F) 12.3-33

Figure 12.3-3 Reactor Building Radiation Zone Map for Full Power and Shutdown Operation at Elevation 4800/8500 mm (B1F) 12.3-33

Figure 12.3-4 Not Used 12.3-33

Figure 12.3-5 Reactor Building Radiation Zone Map for Full Power and Shutdown Operation at Elevation 12300 mm (1F) 12.3-33

Figure 12.3-6 Reactor Building Radiation Zone Map for Full Power and Shutdown Operation at Elevation 18100 mm (2F) 12.3-33

Figure 12.3-7 Reactor Building Radiation Zone Map for Full Power and Shutdown Operation at Elevation 23500 mm (3F) 12.3-33

Figure 12.3-8 Reactor Building Radiation Zone Map for Full Power and Shutdown Operation at Elevation 27200 mm (4F) 12.3-33

Figure 12.3-9 Reactor Building Radiation Zone Map for Full Power and Shutdown Operation at Elevation 31700 mm (4FM) 12.3-33

Figure 12.3-10 Reactor Building Radiation Zone Map for Full Power and Shutdown Operation at Cross Section View A–A 12.3-33

Figure 12.3-11 Reactor Building Radiation Zone Map for Full Power and Shutdown Operation at Cross Section View B–B 12.3-33

Figure 12.3-12 Reactor Building Radiation Zone Map Post-LOCA at Elevation –8200 mm (B3F) 12.3-33

Figure 12.3-13 Reactor Building Radiation Zone Map Post-LOCA at Elevation –1700 mm (B3F) 12.3-33

Figure 12.3-14 Reactor Building Radiation Zone Map Post-LOCA at Elevation 4800 mm/8500 mm (B1F) 12.3-33

Figure 12.3-15 Not Used 12.3-33

Figure 12.3-16 Reactor Building Radiation Zone Map Post-LOCA at Elevation 12300 mm (1F) 12.3-33

Figure 12.3-17 Reactor Building Radiation Zone Map Post-LOCA at Elevation 18100 mm (2F) 12.3-33

List of Figures (Continued)

Figure 12.3-18 Reactor Building Radiation Zone Map Post-LOCA at Elevation 23500 mm (3F) 12.3-34

Figure 12.3-19 Reactor Building Radiation Zone Map Post-LOCA at Elevation 27200 mm (4F) 12.3-34

Figure 12.3-20 Reactor Building Radiation Zone Map Post-LOCA at Elevation 31700 mm (4FM) 12.3-34

Figure 12.3-21 Reactor Building Radiation Zone Map Post-LOCA at Cross Section A–A 12.3-34

Figure 12.3-22 Reactor Building Radiation Zone Map Post-LOCA at Cross Section B–B 12.3-34

Figures 12.3-23 thru 12.3-35 Not Used 12.3-34

Figure 12.3-36 Radwaste Building, Equipment List (Sheets 1-2) 12.3-34

Figure 12.3-37 Radwaste Building, Radiation Zone Map, Normal Operation at Elevation –1500 mm 12.3-34

Figure 12.3-38 Radwaste Building, Radiation Zone Map, Normal Operation at Elevation –4800 mm 12.3-34

Figure 12.3-39 Radwaste Building, Radiation Zone Map, Normal Operation at Elevation 12300 mm 12.3-34

Figure 12.3-40 Radwaste Building, Radiation Zone Map, Normal Operation at Elevation 21000 mm 12.3-34

Figure 12.3-41 Radwaste Building, Radiation Zone Map, Normal Operation at Cross Section A–A 12.3-34

Figure 12.3-42 Control Building, Radiation Zone Map, Normal Operations at Floor Level TMSL –8200 mm 12.3-34

Figure 12.3-43 Control Building, Radiation Zone Map, Normal Operations at Floor Level TMSL –2150 mm 12.3-34

Figure 12.3-44 Control Building, Radiation Zone Map, Normal Operations at Floor Level TMSL 3500 mm 12.3-34

Figure 12.3-45 Control Building, Radiation Zone Map, Normal Operations at Floor Level TMSL 7900 mm 12.3-34

Figure 12.3-46 Control Building, Radiation Zone Map, Normal Operations at Floor Level TMSL 12300 mm 12.3-34

List of Figures (Continued)

Figure 12.3-47 Control Building, Radiation Zone Map, Normal Operations at Floor Level TMSL 17150 mm 12.3-34

Figure 12.3-48 Control Building, Radiation Zone Map Normal Operation, Side View 12.3-35

Figure 12.3-49 Turbine Building, Radiation Zone Map at Elevation 5300 mm 12.3-35

Figure 12.3-50 Turbine Building, Radiation Zone Map at Elevation 12300 mm 12.3-35

Figure 12.3-51 Turbine Building, Radiation Zone Map at Elevation 20300 mm 12.3-35

Figure 12.3-52 Turbine Building, Radiation Zone Map at Elevation 30300 mm 12.3-35

Figure 12.3-53 Turbine Building, Radiation Zone at Normal Operation Longitudinal Section A–A 12.3-35

Figure 12.3-54 Control Building, Radiation Zone, Post-LOCA, Side View 12.3-35

Figure 12.3-55 Turbine Building, Radiation Zone, Post-LOCA, Longitudinal Section A–A 12.3-35

Figure 12.3-56 Reactor Building, Area Radiation Monitors, –8200 mm 12.3-35

Figure 12.3-57 Reactor Building, Area Radiation Monitors, 1700 mm and 1500 mm 12.3-35

Figure 12.3-58 Reactor Building, Area Radiation Monitors, 4800 mm 12.3-35

Figure 12.3-59 Reactor Building, Area Radiation Monitors, 12300 mm 12.3-35

Figure 12.3-60 Reactor Building, Area Radiation Monitors, 23500 mm 12.3-35

Figure 12.3-61 Reactor Building, Area Radiation Monitors, 27200 mm 12.3-35

Figure 12.3-62 Reactor Building, Area Radiation Monitors, 31700 mm 12.3-35

Figure 12.3-63 Reactor Building, Area Radiation Monitors, Section 270°/90° 12.3-35

Figure 12.3-64 Control and Service Buildings, Area Radiation Monitors 12.3-35

Figure 12.3-65 Radwaste Building, Area Radiation Monitors, Elevation –1500mm 12.3-35

Figure 12.3-66 Radwaste Building, Area Radiation Monitors, Elevation 4800mm 12.3-35

Figure 12.3-67 Radwaste Building, Area Radiation Monitors, Elevation 12300mm 12.3-35

Figure 12.3-68 Radwaste Building, Area Radiation Monitors, Elevation 21000mm 12.3-35

Figure 12.3-69 Not Used 12.3-35

Figure 12.3-70 Turbine Building, Grade Level 2, Area Radiation Monitors, Elevation 12300 mm 12.3-35

List of Figures (Continued)

Figure 12.3-71 Turbine Building, Grade Level 3, Area Radiation Monitors, Elevation 20300 mm....12.3-35

Figure 12.3-72 Turbine Building, Grade Level 4, Area Radiation Monitors, Elevation 30300 mm....12.3-36

Figure 12.3-73 Turbine Building, Area Radiation Monitors, Longitudinal Section A–A....12.3-36

Figure 12.3-74 Upper Drywell Shielding Radiation Dose Rates with Fuel Bundle on Refueling Bellows (Gy/h)....12.3-37

12.0 Radiation Protection

12.1 Ensuring that Occupational Radiation Exposures are ALARA

12.1.1 Policy Considerations

Administrative programs and procedures, in conjunction with facility design, ensure that the occupational radiation exposure to personnel will be kept as low as reasonably achievable (ALARA).

12.1.1.1 Design and Construction Policies

The ALARA philosophy was applied during the initial design of the plant and implemented via internal design reviews. The design was reviewed in detail for ALARA considerations and was reviewed, updated and modified as necessary during the design phase as experience was gained from operating plants. Engineers reviewed the plant design and integrated the layout, shielding, ventilation and monitoring instrument designs with traffic control, security, access control and health physics aspects to ensure that the overall design is conducive to maintaining exposures ALARA.

All pipe routing containing radioactive fluids was reviewed as part of the engineering design effort. This ensured that lines expected to contain significant radiation sources are adequately shielded and properly routed to minimize exposure to personnel.

Operating plant results were continuously integrated during the design phase of the ABWR Standard Plant.

12.1.1.2 Operation Policies

Out of ABWR Standard Plant scope.

12.1.1.3 Compliance with 10CFR20 and Regulatory Guides 8.8, 8.10 and 1.8

Compliance of the ABWR design with Title 10 of the Code of Federal Regulations, Part 20 (10CFR20), is ensured by the compliance of the design and operation of the facility within the guidelines of Regulatory Guides 8.8, 8.10, and 1.8.

12.1.1.3.1 Compliance with Regulatory Guide 8.8

The policy considerations regarding plant operations contained in Regulatory Guide 8.8 are out of ABWR Standard Plant Scope. See Subsection 12.1.4.4 for COL license information.

12.1.1.3.2 Compliance with Regulatory Guide 8.10

Out of ABWR Standard Plant scope. See Subsection 12.1.4.1 for COL license information.

12.1.1.3.3 Compliance with Regulatory Guide 1.8

Out of ABWR Standard Plant scope. See Subsection 12.1.4.2 for COL license information.

12.1.2 Design Considerations

This subsection discusses the methods and features by which the policy considerations of Subsection 12.1.1 are applied. Provisions and designs for maintaining personnel exposures ALARA are presented in detail in Subsections 12.3.1 and 12.3.2.

12.1.2.1 General Design Consideration for ALARA Exposures

General design considerations and methods employed to maintain inplant radiation exposures ALARA, consistent with the recommendations of Regulatory Guide 8.8, have two objectives:

(1) Minimizing the necessity for and amount of personnel time spent in radiation areas, and

(2) Minimizing radiation levels in routinely occupied plant areas in the vicinity of plant equipment expected to require personnel attention.

Both equipment and facility designs are considered in maintaining exposures ALARA during plant operations. Events considered include normal operation maintenance and repairs, refueling operations and fuel storage, inservice inspection and calibrations, radioactive waste handling and disposal, etc.

The features of the plant design which ensure that the plant can be operated and maintained with ALARA exposures will also serve to assist in achieving ALARA exposures during the decommissioning process. Examples of features which will assist in maintaining low occupational exposures during decommissioning include the following:

(1) Provisions for draining, flushing, and decontaminating equipment and piping.

(2) Design of equipment to minimize the buildup of radioactive material and to facilitate flushing of crud traps.

(3) Shielding which provides protection during maintenance or repairs and during decommissioning operations.

(4) Provision of means and adequate space for utilization of movable shielding.

(5) Separation of more highly radioactive equipment from less radioactive equipment and provision of separate shielded compartments for adjacent items of radioactive equipment.

(6) Provision for access hatches for the installation or removal of plant components.

(7) Provision of design features such as the Reactor Water Cleanup (CUW) System and the condensate demineralizer to minimize crud buildup.

12.1.2.2 Equipment Design Considerations for ALARA Exposures

12.1.2.2.1 General Design Criteria

No specific instructions have been given to component designers and engineers regarding ALARA design as provided by specific Acceptance Criterion II.2 of SRP Section 12.1. However, the engineering design procedures require that the component design engineer consider the applicable Regulatory Guides (including Regulatory Guide 8.8) as a part of the design criteria. In this way, the radiation problems of a component or system are considered. A summary survey of the components designs was made to determine the factors considered. The following paragraphs cite some examples of design considerations made to implement ALARA.

12.1.2.2.2 Equipment Design Considerations to Limit Time Spent in Radiation Areas

(1) Equipment is designed to be operated and have its instrumentation and controls in accessible areas both during normal and abnormal operating conditions. Equipment such as the CUW System and the Fuel Pool Cleanup (FPC) System are remotely operated, including the backwashing and precoat operations.

(2) Equipment is designed to facilitate maintenance. Equipment such as the RHR heat exchanger is designed with an excess of tubes in order to permit plugging of some tubes. The heat exchanger has drains to allow draining of the shell-side water. Some of the valves have stem packing of the cartridge type that can be easily replaced. Refueling tools are designed for drainage and with smooth surfaces in order to reduce contamination. Vessel and piping insulation is of an easily removable type.

(3) The material selected for use in the system have been chosen to fulfill the environmental requirements. Valves, for example, use grafoil stem packing to reduce leakage and maintenance.

(4) Past experience has been factored into current designs. The steam relief valves have been redesigned as a result of inservice testing.

12.1.2.2.3 Equipment Design Considerations to Limit Component Radiation Levels

(1) Equipment and piping were designed to reduce the accumulation of radioactive materials in the equipment. The piping, where possible, was constructed of seamless pipe as a means to reduce radiation accumulation on the seam. The filter demineralizers in the CUW System and FPC System are backwashed and flushed prior to maintenance.

(2) Equipment designs include provisions for limiting leaks or controlling the fluid that does leak. This includes piping the released fluid to the sumps and the use of drip pans with drains piped to the floor drains.

(3) The materials selected for use in the primary coolant system consist mainly of austenitic stainless steel, carbon steel and low alloy steel components.

(4) The system design includes a CUW System and a condensate demineralizer system on the reactor feedwater. These systems are designed to limit the radioactive isotopes in the coolant.

(5) External recirculation pumps and recirculation piping were replaced by internally mounted recirculation pumps. Such pumps can be removed easily as an integral or package unit for maintenance outside the lower drywell radiation zone.

12.1.2.3 Facility Layout General Design Considerations for Maintaining Radiation Exposures ALARA

12.1.2.3.1 Minimizing Personnel Time Spent in Radiation Areas

Facility general design considerations to minimize the amount of personnel time spent in radiation areas include the following:

(1) Locating equipment, instruments, and sampling stations, which require routine maintenance, calibration, operation, or inspection, for ease of access and minimum required occupancy time in radiation areas

(2) Laying out plant areas to allow remote or mechanical operation, service, monitoring, or inspection of highly radioactive equipment

(3) Providing, where practicable, for transportation of equipment or components requiring service to a lower radiation area

12.1.2.3.2 Minimizing Radiation Levels in Plant Access Areas and Vicinity of Equipment

Facility general design considerations directed toward minimizing radiation levels in plant access areas and in the vicinity of equipment requiring personnel attention include the following:

(1) Separating radiation sources and occupied areas where practicable (e.g., pipes or ducts containing potentially high radioactive fluids not passing through occupied areas).

(2) Providing adequate shielding between radiation sources and access and service areas. Of special note, the reactor pressure vessel shield wall in the upper drywell extends to within four inches of the upper drywell ceiling, thus permitting continued operation in the upper drywell during refueling and providing shielding in the case of a refueling accident.

(3) Locating equipment, instruments, and sampling sites in the lowest practicable radiation zone.

(4) Providing central control panels to permit remote operation of all essential instrumentation and controls from the lowest radiation zone practicable.

(5) Where practicable for package units, separating highly radioactive equipment from less radioactive equipment, instruments, and controls.

(6) Providing means and adequate space for utilizing moveable shielding for sources within the service area when required.

(7) Providing means to control contamination and to facilitate decontamination of potentially contaminated areas where practicable.

(8) Providing means for decontamination of service areas.

(9) Providing space for pumps and valves outside of highly radioactive areas.

(10) Providing remotely-operated centrifugal discharge and/or backflushable filter systems for highly radioactive radwaste and cleanup systems.

(11) Providing labyrinth entrances to radioactive pump, equipment, and valve rooms.

(12) Providing adequate space in labyrinth entrances for easy access.

(13) Maintaining ventilation air flow patterns from areas of lower radioactivity to areas of higher radioactivity.

(14) Providing both automatic logic control and mechanical stop devices for control of the traversing incore (TIP) probe to prevent withdrawal of the radioactive portions of the TIP onto the cable spoolers.

12.1.3 Operational Considerations

Out of ABWR Standard Plant scope. See Subsection 12.1.4.3 for COL license information.

12.1.4 COL License Information

12.1.4.1 Regulatory Guide 8.10

Compliance with Regulatory Guide 8.10 shall be demonstrated by the COL applicant (Subsection 12.1.1.3.2).

12.1.4.2 Regulatory Guide 1.8

Compliance with Regulatory Guide 1.8 shall be demonstrated by the COL applicant (Subsection 12.1.1.3.3).

12.1.4.3 Occupational Radiation Exposures

COL applicants will provide, to the level of detail provided in Regulatory Guide 1.70, the criteria and/or conditions under which various operating procedures and techniques shall be provided to ensure that occupational radiation exposures ALARA are implemented (Subsection 12.1.3).

12.1.4.4 Regulatory Guide 8.8

Compliance with Regulatory Guide 8.8 shall be demonstrated by the COL applicant (Subsection 12.1.1.3.1).

12.2 Radiation Sources

12.2.1 Contained Sources

12.2.1.1 Source Terms

With the exception of the vessel and drywell shields, shielding designs are based on fission product and activation product sources consistent with Section 11.1. For shielding, it is conservative to design for fission product sources at peak values rather than an annual average, even though experience supports a lower annual average than the design average (Reference 12.2-1). It should be noted that activation products, principally N-16, control shielding calculations in most of the primary system. In areas where fission products are significant, conservative allowance is made for transient decay while at the same time providing for transient increase of the noble gas source, daughter product formation and energy level of emission. Areas where fission products are significant relative to N-16 include: (1) the condenser offgas system downstream of the steam jet air ejector; (2) liquid and solid radwaste equipment; (3) portions of the CUW System; and (4) portions of the feedwater system downstream of the hotwell, including condensate treatment equipment.

For application, the design sources are grouped first by location and then by equipment type (e.g., Reactor Building, core sources). The following paragraphs represent the source data in various pieces of equipment throughout the plant. General locations of equipment are shown in the general plant arrangement drawings of Section 1.2. Specific Acceptance Criterion II.6 of Section 12.2 provides that, in addition to the location of contained sources, their approximate size and shape be shown. Though this has not always been included, the source strength or concentration has been provided in Chapter 12 tables and detailed geometry has been provided in Table 12.2-1 for the reactor and in Chapter 5 for the main steam. In Chapter 12 the reactor water concentrations were used to develop sources in equipment containing reactor water or steam.

12.2.1.2 Reactor, Radwaste, and Turbine Building Sources

The information in this section is divided into two categories: (1) the reactor vessel sources (Subsection 12.2.1.2.1) and (2) the sources in the remaining areas (Subsections 12.2.1.2.2 through 12.2.1.3). Included in these areas are the sources from the Radwaste Building (Subsection 12.2.1.2.6) and the Turbine Building (Subsection 12.2.1.3). Table 12.2-5 presents an overview of the radioactive sources found in the ABWR excluding the reactor pressure vessel. This table is divided into four sections. The first section lists all major radioactive sources, the table which provides the source term information for the component, and the figure in Section 12.3 (or Chapter 1) in which the component location is shown along with coordinates for the component. In addition, the approximate geometry of the component is supplied. This geometry, in most cases, is only approximate and represents a generic application as compared to specific details for a vendor-supplied component. The second section of Table 12.2-5 gives for each component the estimated source distribution in each component. Again, this is

estimated and will depend on final design parameters with vendor-specific application. The third section of Table 12.2-5 lists room dimensions and wall thicknesses for each component. This data is taken from the arrangement drawings and represents minimal values. Part four of Table 12.2-5 lists pipe chases, the major pipe routing through these chases, and piping data. Only chases carrying significant radioactive sources are listed.

Some areas of the plant show shielded areas without any designation to any radioactive component. These are primarily areas found around the primary containment boundary. For example, in Figure 12.3-5, at coordinate (RF,R4) a shielded area is shown with breakdown walls without any designated component. This area represents shielded penetration areas for nonradioactive components and can be cross referenced to Figure 1.2-13. Reference to Figure 1.2-13a shows electrical penetrations from the primary containment into the shielded area at (RF,R4) on Figure 12.3-5.

12.2.1.2.1 Reactor Vessel Sources

12.2.1.2.1.1 Radiation from the Reactor Core

12.2.1.2.1.1.1 General

The information in this section defines a reactor vessel model and the associated gamma and neutron radiation sources. This section is designed to provide the data required or calculations beyond the vessel. The data selected were not chosen for any given program, but were chosen to provide information for any of several shield program types. In addition to the source data, calculated radiation dose levels are provided at locations surrounding the vessel. These data are given as a potential check point for calculations by shield designers.

12.2.1.2.1.1.2 Physical Data

Table 12.2-1 presents the physical data required to form the model in Figure 12.2-1. This model was selected to contain as few separate regions as possible to adequately portray the reactor. Table 12.2-1 provides nominal dimensions and material volume fractions for each boundary and region in the reactor model. To describe the reactor core, Table 12.2-1 provides thermal power, power density, core dimensions, core average material volume factions and reactor power distributions. The reactor power distributions are given for both radial and axial distributions. These data contain uncertainties in the volume regions near the edge of the core. The level of uncertainties for these regions is estimated at 20%.

12.2.1.2.1.1.3 Core Boundary Neutron Fluxes

Table 12.2-2 presents peak axial neutron multigroup fluxes at the core equivalent radius. The core-equivalent radius is a hypothetical boundary enclosing an area equal to the area of the fuel bundles and the coolant space between them. The peak axial flux occurs adjacent to the portion of the core with the greatest power. While the flux within any given energy group is not known within a factor of 2, the total calculated core boundary flux is estimated to be within ±50%.

12.2.1.2.1.1.4 Gamma Ray Source Energy Spectra

Table 12.2-3 presents average gamma ray energy spectra thermal per watt of reactor power in both core and non-core regions. In Table 12.2-3, part A, the energy spectra in the core are presented. The energy spectra in the core represent the average gamma ray energy released by energy group in J/cm^3/s/MW thermal. The energy spectra in J/s/MW thermal/cm^3 can be used with the total core power and power distributions to obtain the source in any part of the core.

The gamma ray energy spectra include the fission gamma rays, the fission product gamma ray and the gamma rays resulting from inelastic neutron scattering and thermal neutron capture. The total gamma ray energy released in the core is estimated to be accurate to within ±10%. The energy release rate above 0.96 pico J may be in error by as much as a factor of ±2.

Table 12.2-3, part B, gives a gamma ray energy spectrum in J/s/W in spent fuel as a function of time after operation. The data were prepared from tables of fission product decay gamma fitted to integral measurements for operation times of 10^8 s, or approximately 3.2 years. To obtain shutdown sources in the core the gamma ray energy spectra are combined with the core thermal power and power distributions. Shutdown sources in a single fuel element can be obtained by using the gamma ray energy spectra and the thermal power the element contained during operation.

Table 12.2-3, part C, gives the gamma ray energy spectra in the cylindrical regions of the reactor from the core through the vessel. The energy spectra are given in terms of J/cm^3/ s/W at the inside surface and outside surfaces of the region. This energy spectrum, multiplied by the core thermal power, is the gamma ray source. The point on the inside surface of the region is the maximum point within the region. In the radial direction, the variation in source intensity may be approximated by an exponential fit to the data on the inside and outside surfaces of the region. The axial variation in a region can be estimated by using the core axial variation. The uncertainty in the gamma ray energy spectra is due primarily to the uncertainty in the neutron flux in these regions. The uncertainty in the neutron flux is estimated to vary from approximately ±50% at the core boundary to a factor of ±3 at the outside of the vessel. The calculations were carried out with voids beyond the vessel.

12.2.1.2.1.1.5 Gamma Ray and Neutron Fluxes Outside the Vessel

Table 12.2-4 presents the maximum axial neutron and gamma ray fluxes outside the vessel. The maximum axial flux occurs on the vessel opposite the elevation of the core with the maximum outer bundle power level. This elevation can be located using the data from Table 12.2-1. The fluxes at this elevation are based on a mean radius core and do not show azimuth angle variations. The calculational model for these fluxes assumed no shield materials beyond the vessel wall. The presence of shield materials will significantly alter the neutron fluxes in the lower end of the neutron energy spectrum. The gamma ray calculations include gamma ray sources from all of the cylindrical regions between the center of the core and the edge of the

vessel. While the uncertainties in a given energy group flux may be a factor of ±3, the uncertainties in the total integral flux are estimated to be within a factor of two.

12.2.1.2.1.1.6 Deleted

12.2.1.2.2 Radioactive Sources in the Reactor Water, Steam and Offgas

The radioactive sources in the reactor water, steam and offgas are covered and discussed in Chapter 11 (Subsections 11.1.1 through 11.1.4). This material provides the concentrations during normal operation of the radioisotopes in the reactor vessel or leaving the reactor vessel.

12.2.1.2.3 Radioactive Sources in the HPCF and the LPFL Mode of the RHR System

The HPCF and the LPFL take suction from either the condensate storage tank or from the suppression pool. The radiation source in the equipment is the activity of the water transported through the system.

12.2.1.2.4 Radioactive Sources in the Reactor Shutdown Mode of the Residual Heat Removal System

The radioactive sources (Tables 12.2-6 and 12.2-7) in the Residual Heat Removal (RHR) System were calculated for the system operating in the reactor shutdown mode. In this mode, the system recirculates reactor coolant to remove reactor decay heat (Subsection 5.4.7). The RHR System is operated from approximately 2–4 hours after shutdown until the end of the refueling period. The source in the RHR System is the activity in the volume of reactor water contained in the system. This should include the increase of activity as a result of depressurization.

12.2.1.2.5 Radioactive Sources in Reactor Core Isolation Cooling System

The radioactive sources in the Reactor Core Isolation Cooling (RCIC) System were evaluated for the systems operating in the reactor shutdown mode. This system may be utilized during reactor shutdown if the main condenser is unavailable. The system is operated from the time of reactor shutdown for approximately 2 hours until a reactor pressure of 0.345 MPaG is achieved. Below 1.03 MPaG, the RCIC flow decreases. The source in the system is the activity in the volume of reactor water and steam contained in the system.

During routine testing of the system, the source in the equipment is the activity of the steam driving the system turbine. This activity is controlled by N-16. The radiation source data used in the shield design for this system is shown in Table 12.2-8.

12.2.1.2.6 Radioactive Sources in Radwaste Systems

12.2.1.2.6.1 Radioactive Sources in the Reactor Water Cleanup System

The radioactive sources are the result of the activity in the reactor water in transit through the system or accumulation of radioisotopes removed from the water. Components for this system

include regenerative and nonregenerative heat exchangers, pumps, valves, filter demineralizers and the backwash receiving tank (Subsection 5.4.8). The accumulated sources in the filter demineralizers, backwash receiving tanks and heat exchangers are given in Tables 12.2-9 through 12.2-12.

The radioactive source is present in the filters and receiving tanks during all modes of operation. Therefore, backwashing capability is provided to remove the residual activity for effective radwaste handling.

12.2.1.2.6.2 Radioactive Sources in Liquid Radwaste System

The Liquid Radwaste System is composed of three subsystems designed to collect, treat and cycle or discharge different categories of waste water (Subsection 11.2.2). The radioactive sources for the components in the systems are provided in Table 12.2-13. The isotopic inventories in the liquid radwaste components were calculated assuming a fission product release rate from the fuel equivalent to that required to produce 3.7 GBq/s of offgas following a 30-min holdup period.

12.2.1.2.6.3 Radioactive Sources in the Gaseous Radwaste System

The gaseous effluent treatment systems are designed to limit the dose to offsite persons from routine station release. The offgases are treated through the use of a catalytic Recombiner and Ambient Temperature Charcoal Adsorption (RECHAR) System (Subsection 11.3.2). The system is designed to handle an annual average noble gas release equivalent to 3.7 GBq/s after a 30-minute delay. The accumulation of gaseous radioisotopes and the solid daughter products resulting from the decay of the noble gases are given in Table 12.2-14. The inventory in the components, evaluated for a 60-year operating time, has been used to accumulate the decay activities. This is sufficient time for most isotopes to reach equilibrium.

12.2.1.2.6.4 Radioactive Sources in the Solid Radwaste System

The Solid Radwaste System provides the capability for solidifying or packaging waste from the other radwaste systems (Subsection 11.4.2). The wastes are not solidified separately by type or source. The final waste is placed in a steel container or drums. The radioactive sources for the components in the system container and drums are given in Table 12.2-15.

12.2.1.2.6.5 Radioactive Sources in the Fuel Pool Cleanup System

The radiation source data used in the shield design of the Fuel Pool Cleanup (FPC) System filter demineralizer are given in Table 12.2-16.

12.2.1.2.6.6 Radioactive Sources in the Suppression Pool Cleanup System

The radiation source data used in the shield of the Suppression Pool Cleanup (SPC) System are given in Table 12.2-17.

12.2.1.2.7 Radioactive Sources in Piping and Main Steam Systems

12.2.1.2.7.1 Radioactive Sources in Main Steam System

All radioactive material in the Main Steam System result from radioactive sources carried over from the reactor during plant operation. In most of the components carrying live steam, the source is dominated by N-16. In components where N-16 has decayed, the other activities carried by the steam become significant.

12.2.1.2.7.2 Radioactive Crud in Piping and Steam Systems

The inside surfaces of the piping and all reactor and power systems components become coated with activated corrosion products, commonly called crud. The quantity of crud on the components is dependent on a number of factors, including power history, water quality and fuel experience. The piping and components carrying reactor water are coated with higher levels of crud than piping and components carrying steam.

12.2.1.2.8 Radioactive Sources in the Spent Fuel

The radiation source for spent fuel is given in Subsection 12.2.1.2.1.1.4 (Table 12.2-3) in terms of J/s/W. The design calculation is carried out for a mean element and appropriate decay time.

12.2.1.2.9 Other Radioactive Sources

12.2.1.2.9.1 Reactor Startup Source

The reactor startup source is shipped to the site in a special cask designed with shielding. The source is transferred under water while in the cask and loaded into beryllium containers. This is then loaded into the reactor while remaining under water. The source remains within the reactor for its lifetime. Thus, no unique shielding requirements are required after reactor operation.

12.2.1.2.9.2 Radioactive Sources in the Control Rod Drive System

The control rod drive (CRD) source term data are provided in Table 12.2-18. The CRD System is described in Subsection 3.9.4.

12.2.1.2.9.3 Radioactivity in the Transverse In-Core Probe

The Traversing Incore Probe (TIP) System consists of a probe and a stainless steel cable which is run into and out of the core such that the probe and up to 3.7 m of cable are activated. The probe is described in Subsection 7.7.1.6.1 and is automatically controlled and indexed to its incore position. For maintenance, the probe is manually withdrawn into a shielded assembly area in which a shielded container is used to hold the probe. Both automatic logic control and mechanical stops prevent the probe and activated sections of the cable from withdrawal beyond the shielded room and container. Table 12.2-24 describes the levels of radioactivity expected

from the probe and cable. Since there are two specific types of probes (a neutron and a gamma), both types are described in Table 12.2-24.

12.2.1.2.9.4 Radioactivity in the Reactor Internal Pumps

The reactor internal pumps (RIP) are located on the lower exterior portion of the pressure vessel and connect to an impeller located in the pressure vessel. A constant flow of clean water is maintained from the pump into the pressure vessel to minimize contamination of the lower pump housing and components. A complete description of the internal pump is given in Subsection 5.4.1. Contamination of the pump nevertheless occurs primarily on the upper impeller and components and to a lesser extent throughout the water bearing components into the lower pump housing. Table 12.2-25 presents the expected levels of contamination based upon operating experience.

12.2.1.2.9.5 Radioactivity in the Standby Gas Treatment System

The Standby Gas Treatment System (SGTS) is described in Section 6.5. For the determination of the potential activity associated with the operation of the SGTS, the primary containment source term developed in Subsection 12.2.2.1 for Table 12.2-19 was used as the basis for input to the SGTS. Six purges per year were assumed with a SGTS replacement lifetime of five years. The inventory is given in Table 12.2-30.

12.2.1.2.10 Post-accident Radioactive Sources

The ABWR general design criteria limit potential radiation exposure from accidents both to plant personnel and to the public by the use of containment and treatment of accident sources. The following describes those features of the ABWR germane to post- accident radiation sources in the Primary Containment, Reactor Building, Radwaste Building, and the Turbine Building.

The Primary Containment is an inerted steel-lined pressure boundary capable of containing all accident sources with minimal leakage to the environment or other plant areas. Sufficient redundancy in the ECCS and spray systems exists to insure, within a reasonable probability, that this primary boundary will not exceed design criteria. In the case of a degraded core event, additional passive features such as the suppression pool and passive flooder system have been incorporated to flood the containment and scrub airborne fission products. Therefore, for all but the most improbable accident scenarios, radioactive sources from the pressure vessel will be contained in the primary containment.

With respect to the Reactor Building, the overall plant design has divided the Reactor Building into three separate and independent divisions. ECCS components are contained in each division in separate isolated rooms such that the failure of one system in one division will not affect components in another division. Releases of radioactive material either in the form of water or steam (airborne) are contained in and isolated to a large extent in the compartment in which it might occur by the use of watertight doors and area radiation monitors which isolate the HVAC

System from the compartment. Divisional separation under such conditions is complete. Sumps are designed to detect and alarm in the event of leaks in excess of 0.063 liter per second establishing a threshold for leak before break on the larger water-carrying piping systems. All connections to the Primary Containment not terminating in the Reactor Building meet GDC 54, 55, 56, and 57. Therefore, in the event of an accident involving radioactive sources in the Primary Containment or Reactor Building, such sources would be contained and isolated for further treatment and decontamination.

Likewise, potential releases in the Radwaste Building will be contained by isolating the Radwaste Building atmosphere and sealing any water releases in the building, which is seismically qualified and steel-lined to prevent any potential water releases. Such potential releases are discussed in Section 15.7.

The Turbine Building contains no major sources of releasable radioactivity (discounting N-16 because of the 7.7 second half-life) and potential releases are limited to liquid releases of low activity water from the Feedwater and Condenser System. Two other sources exist which contain radioactivity species, but in a form not amenable for release. The potential for accident sources from these two sources (the Offgas System and condenser demineralizers) is reduced due to heavy shielding and compartmentalizing these components.

Estimates on sources and location for limiting design basis events are found in Chapter 15 and sources for degraded core events as a function of probability are found in Chapter 19.

12.2.1.3 Turbine Building Sources

Turbine Building sources are primarily dominated by N-16 in the steam flow from the pressure vessel. The N-16 source results in significant gamma shine from the main steamlines and steam bearing components (turbines, moisture separators, and reheaters) on the order of 0.2 to 0.5 GY/h contact. Estimates of typical BWR sources and gamma shine are given in Reference 12.2-11. Since the geometry of the radiation source is dependent on the exact turbine configuration used, the specific details for the turbines and turbine reheaters are left for construction-specific detail. Tables 12.2-26 through 12.2-28 provide estimates of inventories for the moisture separator, condenser, and condenser demineralizer. The Offgas System is divided into three major components: steam jet air ejector (SJAE), recombiner, and charcoal tanks. The inventory in the SJAE is given in Table 12.2-29, while the inventories in the recombiner and charcoal tanks are given in Table 12.2-14. The Offgas System is more fully described in Subsection 12.2.1.2.6.3.

12.2.2 Airborne and Liquid Sources for Environmental Consideration

This subsection deals with the source and parameters required to evaluate airborne concentrations and liquid releases of radionuclides during normal plant operations for compliance with 10CFR20 and 40CFR190. In addition, specific sources are addressed with regard to airborne contamination in the refueling area under Subsection 12.2.2.3 for evaluation

of worker potential doses under 10CFR20. However, for compliance to worker airborne limitations as stipulated in 10CFR20, direct evaluations are not contained in this document.

12.2.2.1 Production of Airborne Sources

Design efforts are directed towards keeping contained all the radioactive material, whether it is in a solid, liquid or gaseous form; however, the unavoidable leaks from process systems and some processes in refueling and decontamination lead to airborne radioactivity.

Leakage of fluids from the process system will result in the release of radionuclides into plant buildings. In general, the noble radiogases will remain airborne and will be released to the atmosphere with little delay via the building ventilation exhaust duct. The radionuclides will partition between air and water to approach equilibrium conditions. Airborne iodines will "plateout" on most surfaces, including pipe, concrete, and paint. A significant amount of radioiodine remains in air or is desorbed from surfaces. Radioiodines are found in ventilation air as methyl iodide and as inorganic iodine, which is here defined as particulate, elemental and hypoiodous acid forms of iodine. Particulates will also be present in the ventilation exhaust air.

The average annual release of I-131 is given in Table 12.2-20. The basis for these releases is as follows:

(1) A calendar year consisting of 300 days of power operations and one refueling/ maintenance shutdown period.

(2) A concentration I-131 in reactor water of 0.085 MBq/kg.

(3) A carryover of I-131 from reactor water to steam of 1.5%.

(4) Forward-pumped heater drains.

(5) A noble gas release rate of 555 MBq at t = 30 min and an I-131 release rate of 3.7 MBq/s at t = 0.

(6) 24 drywell purges per year, 365 hours between each purge.

(7) Meteorology as provided in Subsection 11.3.10.

The airborne radiological releases from building heating, ventilating, and air conditioning and the main condenser mechanical vacuum pump have been compiled and evaluated in References 12.2-3 and 12.2-5.

Based upon the above conditions and values in References 12.2-2 and 12.2-4, airborne releases to the environment are summarized in Table 12.2-21.

Approximately 1.89E08 MBq/plant/yr of noble radiogases are released; one-half of this total is released from the Turbine Building. The total particulate release rate per plant is approximately 9.81E05 MBq/yr; the annual release of Co-60 is less than 1.11E03 MBq.

12.2.2.2 Not Used

12.2.2.3 Airborne Sources During Refueling

The airborne radioactivity during refueling in the containment is expected to be similar to that observed in operating stations. Experience at operating BWRs has shown that airborne radioactivity can result from the water in the reactor cavity exceeding 100°F and flaking of cobalt dioxide (CoO_2) from the dryer and separator if their surfaces are allowed to dry. Other potential airborne sources could occur during vessel head venting and fuel movement. The airborne radioactive material sources resulting from reactor vessel head and internals removal have been determined from operating plant experience. The major radioisotopes found were I-131, Co-60, and Mn-54, with Nb-95, Zr-95, Ru-103, and Ce-144 at moderate concentrations, and with Ce-141, Cs-137, Co-58, and Cr-51 at low concentrations. The radioactive particulates ranged as high as 7.4E-10 MBq/cm^3 and the I-131 as high as 1.48E-09 MBq/cm^3.

To minimize the containment airborne radioactivity contribution due to removal of the reactor pressure vessel head:

(1) The steam dryer and separator surfaces will be kept wet or covered.

(2) The fuel pools are cooled through heat exchangers of large capacity.

(3) The ventilation system on the refueling pool is designed to sweep air from the pool surface and remove a large portion of potential airborne contamination.

12.2.2.4 Average Annual Doses

For compliance with 10CFR50 Appendix I, evaluations have been made to determine average annual doses to unrestricted areas subject to airborne and liquid releases. For airborne dose calculations, isotopic releases were taken from Table 12.2-20 assuming a 0.8 km exclusion boundary. Releases were assumed to be from the plant stack, since all major (Reactor Building, Turbine Building and Radwaste Building) ventilation systems pipe to the stack for normal releases. Since a site meteorology is not definitively defined, a statistical approach was used to evaluate the releases over a series of meteorologies discussed in References 12.2-6 and 12.2-7. Doses were calculated using methodologies and conversion factors consistent with Regulatory Guides 1.109 and 1.111 as implemented in References 12.2-8 and 12.2-9. Results of the airborne evaluations are given in Table 12.2-21. For the ingestion doses given in Table 12.2-21, ingestion values given in Table E-5 of Regulatory Guide 1.109 were used. COL applicants need to update the airborne dose calculations to conform to the as-designed plant and site-specific meteorology (see Subsection 12.2.3 for COL license information).

The evaluations above provide airborne sources and offsite doses for compliance with 10CFR50 Appendix I. For complete evaluations for compliance to 40CFR190, gamma shine evaluations are not contained in this document, since adequate detail for skyshine evaluations from the turbine complex are required in DAC Table 3.2.

12.2.2.5 Liquid Releases

The ABWR is designed not to release radioactive liquid effluents. However, under certain conditions of high water inventory, up to 3.7 GBq per year, excluding tritium, may be released as described in Subsection 11.2.3. These releases are given in Table 12.2-22 and form the basis for estimating doses using methodologies consistent with Regulatory Guide 1.113 as implemented in Reference 12.2-10. The results of the liquid release, assuming dilution factors described in Subsection 11.2.3.2, are shown in the dose evaluation in Table 12.2-23. COL applicants need to update the liquid dose analysis to conform to the as-designed plant and site-specific parameters (see Subsection 12.2.3 for COL license information).

12.2.3 COL License Information

12.2.3.1 Compliance with 10CFR20 and 10CFR50 Appendix I

The COL applicant will re-evaluate the average annual airborne releases and the average annual liquid releases to the environment for the final plant design and site parameters for conformance to 10CFR20 and 10CFR50 Appendix I (Subsections 12.2.2.4 and 12.2.2.5).

12.2.4 References

12.2-1 J.E. Smith, “Noble Gas Experience in Boiling Water Reactors”, Paper No. A-54, presented at Noble Gases Symposium, Las Vegas, Nevada, September 24, 1974.

12.2-2 “Airborne Releases from BWRs for Environmental Impact Evaluations”, NEDO-21159-2 (1977).

12.2-3 American Nuclear Society, ANS-18.1, Table 5.

12.2-4 “Airborne Releases from BWRs for Environmental Impact Evaluations”, NEDO-21159, March 1976.

12.2-5 “Calculation of Releases of Radioactive Materials in Gaseous and Liquid Effluents from Boiling Water Reactors” (BWR-GALE Code) U.S. NRC NUREG-0016 Rev. 1, January 1979.

12.2-6 I. Hall, et al, Generation of “Typical Meteorological Years for 26 SOLMET Stations”, Sandia National Laboratory Report SAND78-1601 (1978).

12.2-7 D.C. Aldrich, et al, "Technical Guidance for Siting Criteria Development", NUREG/CR-2239 (1981).

12.2-8 E.W. Bradley, "Gamma and Beta Dose to Man from Noble Gas Release to the Atmosphere GEMAN Code." NEDO-25132A, April 1980.

12.2-9 E.W. Bradley and V.D. Nguyen, "Radiation Exposure from Airborne Effluents—the REFAE Code", NEDO-25257, July 1980.

12.2-10 P.P. Standcavage and D.G. Abbott, "Liquid Discharge Doses LIDSR Code", NEDM-20609-01, August 1976.

12.2-11 D.R. Rogers, "BWR Turbine Equipment N-16 Radiation Shielding Studies", GE NEDO-20206, December 1973.

Table 12.2-1a Basic Reactor Data

a. Reactor Thermal Power	3926 MW
b. Average Power Density	50.57 W/cm^3
c. Physical Dimensions	Figure 12.2-1
	Radii (cm)
1. Core Equivalent Radius	258.13
2. Inside Shroud Radius	274.955
3. Outside Shroud Radius	280.035
4. Inside Vessel Radius—Average	355.6
5. Outside Vessel Radius—Average	374.015
6. Shroud Head Inside Radius	568.96
7. Outside Top Guide Radius	307.34
8. Inside Radius of Shroud Head Flange	292.1
9. Outside Radius of Shroud Head Flange	297.18
10. Vessel Top Head Inside Radius	335.28
11. Vessel Bottom Head Inside Radius	486.61
	Elevation (cm)
12. Outside of Vessel Bottom Head	–27.94
13. Inside of Vessel Bottom Head	0.0*
14. Vessel Bottom Head Knuckle	164.46
15. Bottom of Core Support Plate	506.34
16. Top of Core Support Plate	511.42
17. Bottom of Active Fuel	534.11
18. Top of Active Fuel	
(365.8 cm fuel)	904.95
(381.0 cm fuel)	915.11

Table 12.2-1a Basic Reactor Data (Continued)

19. Bottom of Top Guide	933.85
20. Top of Fuel Channel	951.63
21. Shroud Head Knuckle	1068.29
22. Inside of Shroud Head	1150.54
23. Outside of Shroud Head	1155.62
24. Normal Vessel Water Level	1342.06
25. Top of Steam Dryer	1747.14
26. Vessel Top Head Knuckle	1770.3
27. Inside of Vessel Top Head	2105.58
28. Outside of Vessel Top Head	2117.01

* Corresponds to TMSL 4950 mm.

Table 12.2-1b Basic Reactor Data—Material Densities* (g/cm^3)

Region	Coolant	UO_2	Zircaloy	304L Stainless
A	0.740	0	0	0.178
B	0.338	0	0	4.35
C	0.318	2.33	0.978	0.056
C-1	0.597	0	0.166	1.70
C-2	0.234	0	1.10	0.255
D	0.240	0	1.00	1.21
E	0.390	0	0	0
F	0.669	0	0	0.200
G	0.036	0	0	0
H	0.740	0	0	0
I	0.740	0	0	0.260

* See Figure 12.2-1 for Location Schematic.

Table 12.2-1c Basic Reactor Data—Typical Core Exposure Distribution

Radial 2 Dimensional Distribution giving axial averaged normalized differential exposure for an equilibrium cycle for a 17 x 17 node.

Node	1	2	3	4	5	6	7	8	9	10	11	12	13	14	15	16	17
1															0.2733	0.3456	0.3564
2												0.2900	0.3680	0.4420	0.6689	0.7918	0.7681
3											0.3918	0.7214	0.7771	0.8530	0.9636	0.9322	1.0265
4								0.2838	0.3825	0.4969	0.8342	0.8860	0.9921	1.0751	1.0184	1.1152	1.0498
5							0.3695	0.6740	0.7584	0.9218	0.9454	1.0714	1.1475	1.0771	1.1977	1.2231	1.2190
6						0.4148	0.6957	0.8268	0.9737	0.9734	1.1057	1.1828	1.1092	1.2400	1.2551	1.1409	1.2561
7					0.3478	0.6818	0.8332	0.9823	0.9649	1.0854	1.1782	1.1157	1.2566	1.2738	1.1512	1.2514	1.1277
8				0.2566	0.5818	0.7993	0.9731	0.9474	0.9985	1.0959	1.0802	1.2358	1.2747	1.1617	1.2710	1.2421	1.1610
9				0.3676	0.7281	0.9539	0.9551	0.9945	0.7311	0.7371	1.1321	1.2413	1.1560	1.2804	1.2610	1.0835	0.8136
10				0.4888	0.9068	0.9613	1.0766	1.0911	0.7359	0.7931	1.1715	1.1308	1.2652	1.2731	1.1346	1.1581	0.7962
11			0.3918	0.8298	0.9381	1.0976	1.1717	1.0761	1.1295	1.1703	1.1130	1.2364	1.2491	1.1335	1.2415	1.2337	1.1632
12		0.2939	0.7256	0.8857	1.0682	1.1781	1.1118	1.2320	1.2383	1.1290	1.2354	1.2277	1.0795	1.1559	1.2306	1.1389	1.2497
13		0.3773	0.7852	0.9963	1.1472	1.1077	1.2541	1.2715	1.1533	1.2624	1.2469	1.0785	0.7808	0.8188	1.0829	1.2347	1.1516
14		0.4730	0.8699	1.0826	1.0800	1.2403	1.2726	1.1598	1.2771	1.2692	1.1303	1.1536	0.8185	0.8222	1.1742	1.2617	1.2700
15	0.2915	0.7258	0.9843	1.0298	1.2012	1.2559	1.1534	1.2696	1.2570	1.1301	1.2357	1.2271	1.0831	1.1725	1.2396	1.1488	1.2616
16	0.3575	0.8158	0.9433	1.1294	1.2213	1.1402	1.2618	1.2398	1.0802	1.1516	1.2235	1.1328	1.2409	1.2553	1.1427	1.2185	1.0967
17	0.3598	0.7786	0.9987	1.1538	1.1125	1.2543	1.2492	1.0797	0.8121	0.7927	1.0730	1.2374	1.2705	1.1566	1.2484	1.2011	0.8127
Sum	1.0089	3.4645	5.6987	8.2204	10.3329	12.0853	13.3778	14.1285	13.4924	14.0089	16.0969	17.1686	16.8688	17.1910	18.5549	18.7215	17.5799

Table 12.2-1d Basic Reactor Data—Typical Core Exposure Distribution—Axial Relative Exposure

Node	Node Mid-Point Elevation (cm) 365.8 cm Fuel	381.0 cm Fuel	Relative Exposure
24	892.25	907.17	2.072%
23	877.01	891.30	3.437%
22	861.77	875.42	4.130%
21	846.53	859.55	4.449%
20	831.29	843.67	4.571%
19	816.05	827.80	4.603%
18	800.81	811.92	4.596%
17	785.57	796.05	4.578%
16	770.33	780.17	4.566%
15	755.09	764.30	4.576%
14	739.85	748.42	4.626%
13	724.61	732.55	4.822%
12	709.37	716.67	4.859%
11	694.13	700.80	4.855%
10	678.89	684.92	4.826%
9	663.65	669.05	4.778%
8	648.41	653.17	4.771%
7	633.17	637.30	4.619%
6	617.93	621.42	4.506%
5	602.69	605.55	4.354%
4	587.45	589.67	4.040%
3	572.21	573.80	3.465%
2	556.97	557.92	2.590%
1	541.73	542.05	1.370%
			100%

Table 12.2-2 Core Boundary Neutron Fluxes

Energy Bounds (pJ)	Neutron Flux (neutrons/cm^2-s)
> 4.8E-01	1.1E + 13
1.6E-01 < E < 4.8E-01	2.3E + 13
1.6E-02 < E < 1.6E-01	3.1E + 13
5.53 keV < E < 1.6E-02	1.8E + 13
10 eV < E < 8.9E-04	2.2E + 13
0.683 eV < E < 1.6E-06	2.5E + 13
E < 1.1E-07	9.1E + 13

Table 12.2-3a Gamma Ray Source Energy Spectra— Gamma Ray Sources in the Core During Operation

Energy (E) Bounds (pJ)	Gamma Ray Source pJ/cm^3/s/MWt
E > 1.6E+00	3.7E+02
1.3E+00 < E < 1.6E+00	2.7E+06
9.6E-01 < E < 1.3E+00	3.5E+07
6.4E-01 < E < 9.6E-01	1.8E+08
3.2E-01 < E < 6.4E-01	8.5E+08
1.6E-01 < E < 3.2E-01	9.5E+08
8.2E-02 < E < 1.6E-01	5.0E+08
3.2E-02 < E < 8.2E-02	1.9E+08
E < 3.2E-02	5.3E+07

Table 12.2-3b Gamma Ray Source Energy Spectra— Post-Operation Gamma Sources in the Core* (pJ/W.s)

Energy Bounds (pJ)	Time after Shutdown 0 s	1 day	1 week	1 month
9.6E-01				
	1.3E+03	1.6E-01	1.6E+00	1.6E-01
6.4E-01				
	2.9E+03	1.1E+00	7.4E-01	1.6E-01
4.8E-01				
	1.7E+03	9.1E-01	5.9E-01	1.6E-01
4.2E-01				
	2.7E+03	4.6E+01	2.7E+01	1.6E-01
3.5E-01				
	3.4E+03	7.2E+01	6.4E+00	8.0E-02
2.9E-01				
	5.3E+03	5.0E+02	3.4E+02	1.0E+02
2.2E-01				
	5.9E+03	3.7E+02	2.6E+02	1.8E+02
1.4E-01				
	8.2E+03	1.2E+03	6.1E+02	3.4E+02
6.4E-02				
	1.9E+03	2.9E-03	1.4E+02	5.8E+01
1.6E-02				

* Operating history of 3.2 years.

Table 12.2-3c Gamma Ray Source Energy Spectra—Gamma Ray Source External to the Core During Operation

	Gamma Ray Source pJ/cm^3/s/MWt			
Energy Bounds (pJ)	**Zone H**	**Shroud**	**Zone I**	**Vessel**
E > 1.60	1.9E-07	2.7E-03	4.3E-09	3.0E-07
1.28 < E < 1.60	5.3E-04	41.7	1.2E-05	3.0E-04
0.96 < E < 1.28	0.14	76.9	2.4E-03	3.0E-03
0.64 < E < 0.96	8.3E-04	24.0	1.6E-05	8.2E-04
0.32 < E < 0.64	35.2	17.6	4.6E-02	8.3E-04
0.16 < E < 0.32	4.5E-03	7.7	6.1E-05	3.8E-04
8.2E-02 < E < 0.16	3.7E-03	4.6	5.0E-05	3.3E-04
3.2E-02 < E < 8.2E-02	1.1E-02	1.3	1.9E-04	3.3E-05
E < 3.2E-02	1.3E-04	0.30	2.6E-06	1.5E-05

Table 12.2-4a Gamma Ray and Neutron Fluxes Outside the Vessel Wall—Neutron Fluxes

Energy Bounds (pJ)	Neutron Flux Neutrons/cm^2/s
> 4.8E–01	1.4E+07
1.6E–01 < E < 4.8E–01	4.2E+07
1.6E–02 < E < 1.6E–01	1.7E+08
8.9E–04 < E < 1.6E–02	4.1E+07
1.6E–06 < E < 8.9E–04	6.6E+06
1.1E–07 < E < 1.6E–06	5.3E+06
E < 1.1E–07	1.5E+05

Table 12.2-4b Gamma Ray and Neutron Fluxes Outside the Vessel Wall—Gamma Ray Energy Fluxes

Energy Bounds (pJ)	Gamma Ray Fluxes pJ/cm^2/s
E > 1.6E+00	1.6E+05
1.3E+00 < E < 1.6E+00	2.0E+09
9.6E–01 < E < 1.3E+00	5.3E+09
6.4E–01 < E < 9.6E–01	4.6E+09
3.2E–01 < E < 6.4E–01	6.2E+09
1.6E–01 < E < 3.2E–01	3.5E+09
8.2E–02 < E < 1.6E–01	1.6E+09
3.2E–02 < E < 8.2E–02	1.5E+09
E < 3.2E–02	2.4E+08

Table 12.2-5a Radiation Sources— Radiation Sources

Source Table	For	Drawing	Location	Approximate Geometry
12.2-6	RHR Heat Exchanger	12.3-1	(R1,RF) (R6,RA) (R6,RF)	Rt Cylndr (r=0.9m, l=7m)
12.2-8	RCIC Turbine	12.3-1	(R6,RC)	Rt Cylndr (r=0.5m, l=0.7m)
12.2-9	CUW Filter Demineralizer	12.3-3	(R2,RB)	2 Tanks, Rt Cylndr (r=0.6m, l=3.3m)
12.2-10	CUW Regen Heat Exchanger	12.3-2	(R1,RC)	Rt Cylndr (r=0.4m, l=6.8m)
12.2-11	CUW Non-Regen Heat Exchanger	12.3-1	(R1,RC)	Rt Cylndr (r=0.4m, l=5.5m)
12.2-13.1	LCW Collector Tank	12.3-37	ITEM 7	2 Tanks, Rt Cylndr (r=4.m, l=9.4m)
12.2-13.2	LCW Filter	12.3-39	ITEM 12	Rt Cylndr (r=0.5m, l=2.5m)
12.2-13.3	LCW Demineralizer	12.3-39	ITEM 11	Rt Cylndr (r=0.6m, l=2.8m)
12.2-13.4	LCW Sample Tank	12.3-38	ITEM 8	2 Tanks, Rt Cylndr (r=4.m, l=9.4m)
12.2-13.5	HCW Collector Tank	12.3-37	ITEM 13	Rt Cylndr (r=2.2m, l=4.3m)
12.2-13.6	HCW Demineralizer	12.3-39	ITEM 20	Rt Cylndr (r=0.6m, l=2.8m)
12.2-14	Offgas	12.3-50	(TF,T2)	Tank 1, Rt Cylndr (r=0.6m, l=7.6m) Tanks 2-9, Rt Cylndr (r=1.1m, l=7.6m)
12.2-29	Steam Jet Air Ejector	12.3-51	(TF,T2)	Rt Cylndr (r=0.15m, l=4.6m) Rt Cylndr (r=0.76m, l=6.1m) Rt Cylndr (r=0.2m, l=4.6m)
12.2-14	Offgas Recombiner	12.3-51	(TF,T2)	Rt Cylndr (r=1.4m, l=7m)
12.2-15.1	CUW Backwash Receiving Tank	12.3-1	(R2,RB)	Rt Cylndr (r=2.2m, l=5.7m)
12.2-15.2	CF Backwash Receiving Tank	12.3-49	(TD,T4)	Rt Cylndr (r=2.2m, l=5.7m)
12.2-15.3	Phase Separator	12.3-38	ITEM 30	2 Tanks, Rt Cylndr (r=2.4m, l=6.0m)
12.2-15.4	Spent Resin Storage Tank	12.3-38	ITEM 31	Rt Cylndr (r=2.0m, l=5.7m)
12.2-15.5	Concentrated Waste Tank	12.3-37	ITEM 35	Rt Cylndr (r=1.5m, l=4.4m)
12.2-15.6	Solids Dryer Feed Tank	12.3-41	ITEM 39	Rt Cylndr (r=1.6m, l=3.2m)
12.2-15.7	Solids Dryer (outlet)	12.3-39	ITEM 55	Rt Cylndr (r=0.2m, l=3.2m)
12.2-15.8	Solids Pelletizer	12.3-38	ITEM 58	Rt Cylndr (r=0.4m, l=2.5m)
12.2-15.9	Sol Mist Separator (steam)	12.3-39	ITEM 56	Rt Cylndr (r=0.1m, l=2.8m)

Table 12.2-5a Radiation Sources— Radiation Sources (Continued)

Source Table	For	Drawing	Location	Approximate Geometry
12.2-15.10	Sol Condenser	12.3-40	ITEM 57	Rt Cylndr (r=0.2m, l=1.4m)
12.2-15.11	Sol Drum	12.3-39	(2,D)	Rt Cylndr (r=0.3m, l=0.8m) Box (1.5mx1.5mx1m)
12.2-16	FPC Filter Demineralizer	12.3-3	(R2,RB)	Rt Cylndr (r=0.7m, l=3.4m)
12.2-17	Suppression Pool Cleanup System*	12.3-3	(R2,RA)	Rt Cylndr (r=0.7m, l=3.4m)
12.2-18	Control Rod Drive System†	12.3-2	(R4,RF)	Distributed Source
12.2-24	Traversing Incore Probe	12.3-2	(R4,RB)	Distributed Source
12.2-25	Reactor Internal Pumps‡	12.3-2	(RF,R1)	Distributed Source
12.2-25	RIP Heat Exchanger	1.2-3b	El 3000	Rt Cylndr (r=0.322m, l=2.9m)
12.2-26	Turbine Moisture Separator/Reheater	12.3-52	(T6,TE)	Rt Cylndr (r=1.8m, l=31.m)
12.2-27	Turbine Condenser	12.3-53	(TD,TG)	Distributed Source
12.2-28	Condenser Filter/ Demineralizer			
	Filter	12.3-51	(TC,T2)	3 Tanks, Rt Cylndr(r=1.4m, l=6.1m)
	Demineralizer	12.3-51	(TC,T3)	6 Tanks, Rt Cylndr(r=1.7m, l=5.1m)
12.2-30	SGTS Filter Train	12.3-7	(R2,RB)	Surface, (3.66m x 2.54m)ƒ
Applicant	Spent Fuel Storage	12.3-6	(R4,RF)	See Drawings

* Suppression pool clean up F/D uses second of Fuel Pool F/D

† Maintenance Facility

‡ Maintenance Facility, see Figure 1.2-3b Elevation 3000 for drywell location

ƒ Surface area of HEPA and charcoal filter

Table 12.2-5b Radiation Sources—Source Geometry

Component	Assumed Shielding Source Geometry
RHR Heat Exchanger	Homogenous source over volume of heat exchanger
RCIC Turbine	Homogenous source over volume of turbine
CUW Filter Demineralizer	80% of source in first 15 cm, remainder dispersed over volume.
CUW Regen Heat Exchanger	Homogenous source over volume of exchanger
CUW Non-Regen Heat Exchanger	Homogenous source over volume of exchanger
LCW Collector Tank	80% non-solubles in slurry on tank bottom, rest evenly dispersed in volume
LCW Filter	Homogenous source over volume of filter
LCW Demineralizer	80% of source in first 15 cm, rest evenly dispersed over volume
LCW Sample Tank	Homogenous source over volume of tank
HCW Collector Tank	Homogenous source over volume of tank
HCW Demineralizer	80% of source in first 15 cm, rest evenly dispersed over volume
Offgas	90% of source in first tank in first (upper) 30 cm, rest evenly dispersed. Remaining tanks, homogenous source over tank volume.
Steam Jet Air Ejector*	Homogenous source over volume of ejector
Offgas Recombiner*	Homogenous source over subcomponent (Figure 12.2-14)†
CUW Backwash Receiving Tank	80% non-solubles in slurry on tank bottom, rest evenly dispersed in volume
CF Backwash Receiving Tank	80% non-solubles in slurry on tank bottom, rest evenly dispersed in volume
Phase Separator	90% non-solubles in slurry on tank bottom, rest evenly dispersed in volume
Spent Resin Storage Tank	Homogenous source over volume of tank
Concentrated Waste Tank	90% non-solubles in slurry on tank bottom, rest evenly dispersed in volume
Sol Dryer Feed Tank	Source evenly dispersed over volume
Sol Dryer (outlet)	Source evenly dispersed over volume
Sol Peletizer	Source evenly dispersed over volume
Sol Mist Separator (steam)	Source evenly dispersed over volume
Sol Condenser	Source evenly dispersed over volume
Sol Drum	Source evenly dispersed over volume
FPC Filter Demineralizer	90% insolubles in first 15 cm, rest of source evenly dispersed over volume

Table 12.2-5b Radiation Sources—Source Geometry (Continued)

Component	Assumed Shielding Source Geometry
Suppression Pool Cleanup System	90% insolubles in first 15 cm, rest of source evenly dispersed over volume
Control Rod Drive System	Exposure dependent, assume evenly dispersed over length of blade
Transverse Incore Probe	Point or line geometry (Table 12.2-24)
Reactor Internal Pumps	Cylindrical source coupled to water bearing components
RIP Heat Exchanger	Homogenous source over volume of exchanger
Turbine Moisture Separator/Reheater	Homogenous source over volume of component
Turbine Condenser	Homogenous source over volume of condenser
Condenser Filter/Demineralizer	
Filter	Source evenly dispersed over volume of filter
Demineralizer	90% insolubles in first 15 cm, rest of source evenly dispersed over volume
SGTS Filter Train	90% particulates on HEPA filter, remaining on charcoal filter
Spent Fuel Storage	Applicant

* Radiation levels in SJAE and recombiner highly dependent upon power level. Actual measurements on SJAE condenser contact dose rate are $2x10^{-3}$ Gy/h at 100% power and less than $5x10^{-2}$m Gy/h at 20% power.

† See Offgas Recombiner Description, Section 11.3, use inventory for preheater, recombiner, condenser and cooler for recombiner inventory for shielding applications.

Table 12.2-5c Radiation Sources—Shielding Geometry in Meters

Component	Room Dimensions			Wall Thickness in Meters*					
	Length	Width	Height	East	West	North	South	Floor	Ceiling
RHR Heat Exchanger	12.6	5.6	5.6	0.8	0.6	0.6	0.6	Ground	0.8
RCIC Turbine	14.6	7.8	5.6	0.8	2	0.6	0.6	Ground	0.8
CUW Filter Demineralizer	2.8	3	7.4	0.8	1	0.8	1	0.5	Hatch
CUW Regen Heat Exchanger	7.7	3.6	6	1.4	1.4	1	1.4†	0.8	0.5
CUW Non-Regen Heat Exchanger	7.4	4.4	5.6	1	1	1	1†	Ground	0.8
LCW Collector Tank	19	1	13	1.2	0.8	0.8	1.2	Ground	0.8
LCW Filter	16.4	10.6	8	0.8	0.8	0.8	0.8	0.8	0.8
LCW Demineralizer‡	19.6	10.6	8	0.8	0.8	0.8	0.8	0.8	0.8
LCW Sample Tank	19	10	13	1.2	0.8	1.2	0.8	Ground	0.8
HCW Collector Tank	9	11.2	5.4	0.8	0.8	0.8	1.2	Ground	0.8
HCW Demineralizer‡	19.6	10.6	8	0.8	0.8	0.8	0.8	0.8	0.8
Offgas	9.1	11	16	1	1	1	1	2.5	1
Steam Jet Air Ejector and Recombiner Room	9.1	14.2	7	1	1	1	1	1	1
CUW Backwash Receiving Tank	6.6	7.4	5.6	1	0.8	0.8	1	Ground	0.8
CF Backwash Receiving Tank	5	5	25	1	1	1	1	2.5	Hatch
Phase Separator	16	8.4	4.6	0.8	0.8	0.8	1.2	0.8	0.8
Spent Resin Storage Tank	6.4	6.4	4.6	0.8	0.8	0.8	0.8	0.8	0.8
Concentrated Waste Tank	4.6	5	5.4	0.8	0.8	1.2	0.8	Ground	0.8
Sol Dryer Feed Tank	9.4	7.2	6.2	0.8	0.8	0.8	0.8	0.8	0.8
Sol Dryer (outlet)[f]	9.2	5.2	8	0.8	0.8	0.8	0.8	0.8	0.8
Sol Peletizer	9.2	5.2	6.8	0.8	0.8	0.8	0.8	0.8	0.8

Table 12.2-5c Radiation Sources—Shielding Geometry in Meters (Continued)

Component	Room Dimensions			Wall Thickness in Meters*					
	Length	Width	Height	East	West	North	South	Floor	Ceiling
Sol Mist Separator (steam)ƒ	9.2	5.2	8	0.8	0.8	0.8	0.8	0.8	0.8
Sol Condenser	4.2	7.2	6.2	0.8	0.8	0.8	0.8	0.8	0.8
Sol Drum	3.2	3	8	0.8	0.8	0.8	0.8	0.8	0.8
FPC Filter Demineralizer	3.2	3.2	7.4	0.8	1	0.8	0.8	0.5	Hatch
Suppression Pool Cleanup Sys	3.2	3.2	7.4	0.5	0.8	0.8	0.8	0.5	Hatch
Control Rod Drive System**	7.6	33.4	5.8	0.6	0.6	0.6	0.6	0.8	0.6
Transverse Incore Probe	4	7.3	2.7	1	1	1	1	Mezz	0.6
Reactor Internal Pumps**	8.2	8.5	5.8	0.6	0.6	0.6	0.6	0.8	0.6
RIP Heat Exchanger	Primary Containment								
Turbine Moisture Sep/Reheater	12.4	47.6	8.5	1	1	1	1	1	1
Turbine Condenser	14.2	36	25	3.5	2.5	1	1	2.5	Turbine
Condenser Filter	5	21.1	8	2.5†	1	1	1	1	Hatch
Condenser Demineralizer	9.8	17.3	9	1	1	1	1.6	1	1
SGTS Filter Train	14.4	5	8.2	0.2	0.5	0.2	0.2	2	0.6
Spent Fuel Storage	9.4	14	4.1	2	2	2	2	2	7.4††

* North refers to plant 0 degree orientation, east = 90 degrees

† Moveable Wall

‡ LCW and HCW Demineralizer share same room

ƒ Solid dryer and Mist Separator share same room

** Maintenance Facility

†† 7.4m water depth above fuel elements

Table 12.2-5d Radiation Source— Pipe Chase Detail

Pipe Space (PS)	Level	Location	System	Number Pipes	Size*	Source†	Shield Wall Thickness in meters			
							East	West	North	South
RHR(A)	1F	(RC,R6)	RHR	1	273x237	RC	0.6	PC	0.6	0.6
			RCIC	1	168x140	RS	0.6	PC	0.6	0.6
	B1F	(RC,R6)	RHR	1	273x237	RC	0.6	PC	0.6	0.6
			RCIC	1	168x140	RS	0.6	PC	0.6	0.6
			RCIC	1	356X333	SP	0.6	PC	0.6	0.6
	B2F	(RC,R6)	RHR	1	273x237	RC	0.6	PC	0.6	0.6
			RCIC	1	168x140	RS	0.6	PC	0.6	0.6
			RCIC	1	356X333	SP	0.6	PC	0.6	0.6
	B3F	(RC,RA)	RHR	1	273x237	RC	0.6	PC	0.6	0.6
			RCIC	1	168x140	RS	0.6	PC	0.6	0.6
			RCIC	1	356X333	SP	0.6	PC	0.6	0.6
RHR(B)	1F	(RD,R2)	RHR	1	273x237	RC	PC	0.6	0.6	0.6
			HPCF	1	334x303	RC	PC	0.6	0.6	0.6
	B1F	(RD,R2)	RHR	1	273x237	RC	PC	0.6	0.6	0.6
			HPCF	1	334x303	RC	PC	0.6	0.6	0.6
	B2F	(RD,R2)	RHR	1	273x237	RC	PC	0.6	0.6	0.6
			HPCF	1	334x303	RC	PC	0.6	0.6	0.6
	B3F	(RE,R2)	RHR	1	273x237	RC	PC	0.6	0.6	0.6
			HPCF	1	334x303	RC	PC	0.6	0.6	0.6

Table 12.2-5d Radiation Source— Pipe Chase Detail (Continued)

Pipe Space (PS)	Level	Location	System	Number Pipes	Size*	Source†	Shield Wall Thickness in meters			
							East	West	North	South
RHR(C)	1F	(RE,R6)	RHR	1	273x237	RC	0.6	PC	0.6	0.6
			HPCF	1	334x303	RC	0.6	PC	0.6	0.6
	B1F	(RE,R6)	RHR	1	273x237	RC	0.6	PC	0.6	0.6
			HPCF	1	334x303	RC	0.6	PC	0.6	0.6
	B2F	(RE,R6)	RHR	1	273x237	RC	0.6	PC	0.6	0.6
			HPCF	1	334x303	RC	0.6	PC	0.6	0.6
	B3F	(RE,R6)	RHR	1	273x237	RC	0.6	PC	0.6	0.6
			HPCF	1	334x303	RC	0.6	PC	0.6	0.6
FPC/CUW	2F	(RB,R3)	FPC	2	273x255	1% RC	1.2	1.2	1.2	1.2
	1F	(RB,R3)	FPC	2	273x255	1% RC	1.2	1.2	1.2	1.2
			CUW	1	219x189	RC	1.6	1.2	1.2	1.2
	B1F	(RB,R3)	FPC	2	273x255	1% RC	1.2	1.2	1.2	1.2
			CUW	1	219x189	RC	1.6	1.2	1.2	1.2
	B3F	(RB,R2)	CUW	2	168x140	RC	0.6	0.6	0.8	0.8
MSL/FDW	1F	(RB,R4)	MSL	4	711x640	RS	1.6	1.6	1.6	1.6
			FDW	4	550x480	10% RS‡	1.6	1.6	1.6	1.6
SPCU	B2F	(RC,R2)	SPCU	1	219x203	SP	PC	0.8	0.8	0.8

* Pipe size given as outside diameter in millimeters and inside diameter in millimeters.

† Source is defined by RC= reactor coolant water, see Tables 11.2-2 through 11.2-5. RS is reactor steam, see Tables 11.2-1 and 4. SP=Suppression pool water = 10% RC (normal operations), Reg Guide 1.7 (LOCA conditions).

‡ No N-16 or noble gases in feedwater.

Table 12.2-6 Fission Product Gamma Source Strength in the RHR Heat Exchanger

Energy Bounds (pJ)	Gamma Source (pJ/s)
>6.4E–01	0.0
4.8E–01 – 6.4E–01	3.7E+01
4.2E–01 – 4.8E–01	4.5E+03
3.5E–01 – 4.2E–01	1.3E+04
2.9E–01 – 3.5E–01	2.6E+04
2.2E–01 – 2.9E–01	1.8E+05
1.4E–01 – 2.2E–01	3.7E+05
6.4E–02 – 1.4E–01	5.6E+05
1.6E–02 – 6.4E–02	6.9E+04
0.0 – 1.6E–02	8.7E+02

Table 12.2-7 Fission Product Inventory in the RHR Heat Exchanger 2 Hours After Shutdown

Class	Isotope		Lambda (/h)	Inventory (MBq)
Class 2	I	131	3.59E–03	1.2E+06
	I	132	3.03E–01	1.0E+06
	I	133	3.33E–02	2.7E+06
	I	134	7.91E–01	6.7E+05
	I	135	1.05E–01	2.3E+06
Class 3	RB	089	2.74E 00	2.8E+01
	CS	134	3.84E–05	2.8E+01
	CS	136	2.22E–03	1.9E+01
	CS	137	2.63E–06	7.4E+01
	CS	138	1.29E 00	9.6E+02
Class 5	H	3	6.45E–06	3.1E+03
Class 6	NA	24	4.63E–02	9.6E+03
	P	32	2.02E–03	2.0E+02
	CR	51	1.04E–03	6.3E+03
	MN	54	9.53E–05	7.0E+01
	MN	56	2.69E–01	3.3E+04
	FE	55	3.04E–05	1.0E+03
	FE	59	6.33E–04	3.1E+01
	CO	58	4.05E–04	2.1E+02
	CO	60	1.50E–05	4.1E+02
	NI	63	7.90E–07	1.0E+00
	CU	64	5.42E–02	2.8E+04
	ZN	65	1.18E–04	2.1E+02
	SR	089	5.55E–04	1.0E+02
	SR	090	2.81E–06	7.0E+00
	Y	090	2.81E–06	7.0E+00
	SR	091	7.31E–02	3.7E+03
	SR	092	2.56E–01	7.0E+03
	Y	091	4.93E–04	4.1E+01
	Y	092	1.96E–01	4.4E+03
	Y	093	6.80E–02	3.7E+03

Table 12.2-7 Fission Product Inventory in the RHR Heat Exchanger 2 Hours After Shutdown (Continued)

Class	Isotope		Lambda (/h)	Inventory (MBq)
Class 6 (continued)	ZR	095	4.41E–04	8.1E+00
	NB	095	8.23E–04	8.1E+00
	MO	099	1.05E–02	2.0E+03
	TCM	099	1.05E–02	2.0E+03
	RU	103	7.29E–04	2.1E+01
	RHM	103	7.29E–04	2.1E+01
	RU	106	7.83E–05	3.1E+00
	RH	106	7.83E–05	3.1E+00
	AGM	110	1.16E–04	1.0E+00
	TEM	129	8.65E–04	4.1E+01
	TEM	131	2.31E–02	1.0E+02
	TE	132	8.89E–03	1.0E+01
	BA	140	2.26E–03	4.1E+02
	LA	140	2.26E–03	4.1E+02
	CE	141	8.88E–04	3.1E+01
	CE	144	1.02E–04	3.1E+00
	PR	144	1.02E–04	3.1E+00
	W	187	2.90E–02	3.0E+02
	NP	239	1.24E–02	8.1E+03
Total				**8.0E+06**

Table 12.2-8 Reactor Coolant Concentration Values Entering the RCIC Turbine

Class	Isotope		MBq/g	Class	Isotope		MBq/g
Class1	KRM	083	6.3E–05	Class 6	CR	051	7.4E–07
	KRM	085	1.0E–04		MN	054	8.5E–09
	KR	085	4.1E–07		MN	056	6.7E–06
	KR	087	3.4E–04		FE	055	1.2E–07
	KR	088	3.4E–04		FE	059	3.7E–09
	KR	089	2.1E–03		CO	058	2.4E–08
	XEM	131	3.4E–07		CO	060	4.8E–08
	XEM	133	5.2E–06		NI	063	1.2E–10
	XE	133	1.4E–04		CU	064	3.7E–06
	XEM	135	4.4E–04		ZN	065	2.4E–08
	XE	135	4.1E–04		SR	089	1.2E–08
	XE	137	2.7E–03		SR	090	8.5E–10
	XE	138	1.6E–03		Y	090	8.5E–10
Class 2	I	131	8.9E–06		SR	091	5.2E–07
	I	132	7.8E–05		SR	092	1.4E–06
	I	133	5.9E–05		Y	091	4.8E–09
	I	134	1.3E–04		Y	092	8.1E–07
	I	135	8.5E–05		Y	093	5.2E–07
Class 3	RB	089	7.8E–07		ZR	095	9.6E–10
	CS	134	3.3E–09		NB	095	9.6E–10
	CS	136	2.2E–09		MO	099	2.4E–07
	CS	137	8.9E–09		TCM	099	2.4E–07
	CS	138	1.5E–06		RU	103	2.4E–09
Class 4	N	16	8.9E–01*		RHM	103	2.4E–09
Class 5	H	3	3.7E–04		RU	106	3.7E–10
Class 6	NA	024	1.3E–06		AGM	110	1.2E–10
	P	032	2.4E–08		TEM	129	4.8E–09

(Continued)

Table 12.2-8 Reactor Coolant Concentration Values Entering the RCIC Turbine (Continued)

Class	Isotope	MBq/g	Class	Isotope	MBq/g
			Class 6 (continued)	TEM 131	1.2E–08
				TE 132	1.2E–09
				BA 140	4.8E–08
				LA 140	4.8E–08
				CE 141	3.7E–09
				CE 144	3.7E–10
				PR 144	3.7E–10
				W 187	3.7E–08
				NP 239	1.0E–06

* Mulitply by 6 if Hydrogen Water Chemistry is in use.

Table 12.2-9 CUW Filter Demineralizer

Source Volume = 15m^3/Batch (Backwash)

Total Megabecquerels = 8.84E 07

Halogens			Soluble Fission Products			Insoluble Fission Products			Activation Products		
Isotope		**MBq**	**Isotope**		**MBq**	**Isotope**		**MBq**	**Isotope**		**MBq**
I	131	1.11E+07	RB	89	2.22E+04	Y	91	1.91E+05	NA	24	2.1E+06
I	132	1.30E+06	SR	89	4.74E+05	Y	92	3.16E+05	P	32	6.5E+05
I	133	9.32E+06	SR	90	3.88E+04	Y	93	5.44E+05	CR	51	2.5E+07
I	134	8.55E+05	Y	90	3.88E+04	ZR	95	3.88E+04	MN	54	3.8E+05
I	135	4.03E+06	SR	91	5.55E+05	NB	95	3.47E+04	MN	56	1.9E+06
			SR	92	4.07E+05	RU	103	9.06E+04	CO	58	9.9E+05
			MO	99	1.79E+06	RH	103M	9.06E+04	CO	60	2.2E+06
			TC	99M	1.79E+06	RU	106	1.64E+04	FE	55	5.5E+06
			TE	129M	1.72E+05	RH	106	1.64E+04	FE	59	1.4E+05
			TE	131M	4.03E+04	LA	140	1.21E+06	NI	63	5.6E+03
			TE	132	1.04E+04	CE	141	1.30E+05	CU	64	5.2E+06
			CS	134	1.49E+05	CE	144	1.64E+04	ZN	65	1.1E+06
			CS	136	5.62E+04	PR	144	1.64E+04	AG	110M	5.4E+03
			CS	137	4.07E+05				W	187	9.7E+04
			CS	138	9.29E+04						
			BA	140	1.21E+06						
			NP	239	6.18E+06						
Total		**2.66E+07**	**Total**		**1.34E+07**	**Total**		**2.71E+06**	**Total**		**4.54E+07**

Table 12.2-10 Reactor Water Cleanup, Regenerative Heat Exchanger Tube Sides

Class	Isotope	MBq	Class	Isotope	MBq
Class 2	I-131	4.8E+03	Class 6 (Continued)	SR-91	1.1E+03
	I-132	1.7E+04		SR-92	3.1E+03
	I-133	1.6E+04		Y-91	1.1E+01
	I-134	2.8E+04		Y-92	1.8E+03
	I-135	1.9E+04		Y-93	1.1E+03
Class 3	RB-89	1.8E+03		ZR-95	2.2E+00
	CS-134	7.4E+00		NB-95	2.2E+00
	CS-136	5.2E+00		MO-99	5.6E+02
	CS-137	2.0E+01		TCM-99	5.6E+02
	CS-138	3.4E+03		RU-103	5.6E+00
Class 5	H-3	8.5E+02		RHM103	5.6E+00
Class 6	NA-24	2.8E+03		RU-106	8.1E–01
	P-32	5.6E+01		RH-106	8.1E–01
	CR-51	1.7E+03		AGM110	2.8E–01
	MN-54	1.9E+01		TEM129	1.1E+01
	MN-56	1.6E+04		TEM131	2.8E+01
	FE-55	2.8E+02		TE-132	2.8E+00
	FE-59	8.1E+00		BA-140	1.1E+02
	CO-58	5.6E+01		LA-140	1.1E+02
	CO-60	1.1E+02		CE-141	8.1E+00
	NI-63	2.8E–01		CE-144	8.1E–01
	CU-64	8.5E+03		PR-144	8.1E–01
	ZN-65	5.6E+01		W-187	8.5E+01
	SR-89	2.8E+01		NP-239	2.2E+03
	SR-90	1.9E+00			
	Y-90	1.9E+00		**Total**	**1.3E+05**

Table 12.2-11 Reactor Water Cleanup, Non-Regenerative Heat Exchanger Tube Sides

Class	Isotope	MBq	Class	Isotope	MBq
Class 2	I-131	6.3E+03	Class 6 (Continued)	SR-91	1.5E+03
	I-132	2.1E+04		SR-92	4.1E+03
	I-133	2.1E+04		Y-91	1.4E+01
	I-134	3.6E+04		Y-92	2.4E+03
	I-135	2.6E+04		Y-93	1.5E+03
Class 3	RB-89	2.3E+03		ZR-95	2.9E+00
	CS-134	9.6E+00		NR-95	2.9E+00
	CS-136	6.7E+00		MO-99	7.4E+02
	CS-137	2.6E+01		TCM-99	7.4E+02
	CS-138	4.4E+03		RU-103	7.4E+00
Class 5	H-3	1.1E+03		RHM103	7.4E+00
Class 6	NA-24	3.7E+03		RU-106	1.1E+00
	P-32	7.4E+01		RH-106	1.1E+00
	CR-51	2.2E+03		AGM110	3.6E–01
	MN-54	2.6E+01		TEM129	1.4E+01
	MN-56	2.0E+04		TEM131	3.7E+01
	FE-55	3.6E+02		TE-132	3.7E+00
	FE-59	1.1E+01		BA-140	1.4E+02
	CO-58	7.4E+01		LA-140	1.4E+02
	CO-60	1.4E+02		CE-141	1.1E+01
	NI-63	3.6E–01		CE-144	1.1E+00
	CU-64	1.1E+04		PR-144	1.1E+00
	ZN-65	7.4E+01		W-187	1.1E+02
	SR-89	3.6E+01		NP-239	2.9E+03
	SR-90	2.6E+00			
	Y-90	2.6E+00		**Total**	**1.7E+05**

Table 12.2-12 Reactor Water Cleanup, Regenerative Heat Exchanger Shell Side

Class	Isotope	MBq	Class	Isotope	MBq
Class 2	I-131	1.6E+02	Class 6 (Continued)	Y-90	6.7E–03
	I-132	5.6E+02		SR-91	3.7E+00
	I-133	5.6E+02		SR-92	1.0E+01
	I-134	9.3E+02		Y-92	5.9E+00
	I-135	6.7E+02		Y-93	3.7E+00
Class 3	Y-91	3.7E–02		ZR-95	7.4E–03
	RB-89	5.9E+00		NB-95	7.4E–03
	CS-134	2.5E–02		MO-99	1.9E+00
	CS-136	1.7E–02		TCM-99	1.9E+00
	CS-137	6.7E–02		RU-103	1.9E–02
	CS-138	1.1E+01		RHM103	1.9E–02
Class 5	H-3	2.8E+03		RU-106	2.8E–03
Class 6	NA-24	9.6E+00		RH-106	2.8E–03
	P-32	1.9E–01		AGM110	9.3E–04
	CR-51	5.6E+00		TWM129	3.7E–02
	MN-54	6.7E–02		TEM131	9.3E–02
	MN-56	5.2E+1		TE-132	9.3E–03
	FE-55	9.3E–01		BA-140	3.7E–01
	FE-59	2.8E–02		LA-140	3.7E–01
	CO-58	1.9E–01		CE-141	2.8E–02
	CO-60	3.7E–01		CE-144	2.8E–03
	NI-63	9.3E–04		PR-144	2.8E–03
	CU-64	2.9E+01		W-187	2.8E–01
	ZN-65	1.9E–01		NP-239	7.4E+00
	SR-89	9.3E–02			
	SR-90	6.7E–03		**Total**	**5.8E+03**

Table 12.2-13a Liquid Radwaste Component Inventories— LCW Collector Tank*

Source Volume = 90m^3

Total megabecquerel = 9.88E 05

Halogens		Soluble Fission Products		Insoluble Fission Products		Activation Products	
Isotope	**MBq**	**Isotope**	**MBq**	**Isotope**	**MBq**	**Isotope**	**MBq**
I 131	1.2E+05	RB 89	2.8E+02	Y 91	2.0E+03	NA 24	2.5E+04
I 132	1.7E+04	SR 89	5.1E+03	Y 92	4.1E+03	P 32	6.9E+03
I 133	1.1E+05	SR 90	4.2E+02	Y 93	6.8E+03	CR 51	2.7E+05
I 134	1.1E+04	Y 90	4.2E+02	ZR 95	4.1E+02	MN 54	4.1E+03
I 135	5.2E+04	SR 91	7.0E+03	NB 95	3.7E+02	MN 56	2.5E+04
		SR 92	5.3E+03	RU 103	9.7E+02	CO 58	1.1E+04
		MO 99	2.0E+04	RH 103M	9.7E+02	CO 60	2.4E+04
		TC 99M	2.0E+04	RU 106	1.8E+02	FE 55	6.0E+04
		TE 129M	1.8E+03	RH 106	1.8E+02	FE 59	1.5E+03
		TE 131M	4.6E+02	LA 140	1.3E+04	NI 63	6.0E+01
		TE 132	1.1E+02	CE 141	1.4E+03	CU 64	6.4E+04
		CS 134	1.6E+03	CE 144	1.7E+02	ZN 65	1.2E+04
		CS 136	6.0E+02	PR 143	1.0E+02	AG 110M	5.8E+01
		CS 137	4.4E+03			W 187	1.1E+03
		CS 138	1.2E+03				
		BA 140	1.3E+04				
		NP 239	6.8E+04				
Total	**3.1E+05**	**Total**	**1.5E+05**	**Total**	**3.0E+04**	**Total**	**5.0E+05**

* The inventory in the liquid radwaste components is provided in this table for a deep bed system. The data in Table 12.2-13 were generated assuming a fission product release from the fuel equivalent to that required to produce 3700 MPq/s of offgas following a 30 min holdup period.

Table 12.2-13b Liquid Radwaste Component Inventories— LCW Filter

Source Volume = 1.2m^3/Batch (Backwash)

Total megabecquerel = 1.14E 05

Halogens		Soluble Fission Products		Insoluble Fission Products		Activation Products	
Isotope	**MBq**	**Isotope**	**MBq**	**Isotope**	**MBq**	**Isotope**	**MBq**
I 131	0.0E+00	RB 89	0.0E+00	Y 91	2.0E+03	NA 24	0.0E+00
I 132	0.0E+00	SR 89	0.0E+00	Y 92	2.1E+03	P 32	0.0E+00
I 133	0.0E+00	SR 90	0.0E+00	Y 93	3.5E+03	CR 51	0.0E+00
I 134	0.0E+00	Y 90	0.0E+00	ZR 95	4.1E+02	MN 54	2.1E+04
I 135	0.0E+00	SR 91	0.0E+00	NB 95	3.6E+02	MN 56	6.1E+03
		SR 92	0.0E+00	RU 103	9.4E+02	CO 58	5.3E+03
		MO 99	0.0E+00	RH 103M	9.4E+02	CO 60	1.2E+04
		TC 99M	0.0E+00	RU 106	1.8E+02	FE 55	6.3E+04
		TE 129M	0.0E+00	RH 106	1.8E+02	FE 59	1.5E+03
		TE 131M	0.0E+00	LA 140	1.1E+02	NI 63	3.2E+01
		TE 132	0.0E+00	CE 141	1.3E+03	CU 64	0.0E+00
		CS 134	0.0E+00	CE 144	1.8E+02	ZN 65	0.0E+00
		CS 136	0.0E+00	PR 143	8.5E+01	AG 110M	6.0E+01
		CS 137	0.0E+00			W 187	6.3E+02
		CS 138	0.0E+00				
		BA 140	0.0E+00				
		NP 239	0.0E+00				
Total	0.0E+00	**Total**	0.0E+00	**Total**	**2.3E+04**	**Total**	**1.1E+05**

Table 12.2-13c Liquid Radwaste Component Inventories— LCW Demineralizer

Source Volume = 1.2m^3 (Resin)

Total megabecquerel = 1.99E 06

Halogens		Soluble Fission Products		Insoluble Fission Products		Activation Products	
Isotope	**MBq**	**Isotope**	**MBq**	**Isotope**	**MBq**	**Isotope**	**MBq**
I 131	2.1E+05	RB 89	2.8E+02	Y 91	1.1E+02	NA 24	2.7E+04
I 132	1.7E+04	SR 89	2.4E+04	Y 92	4.2E+01	P 32	1.7E+04
I 133	1.2E+05	SR 90	3.1E+03	Y 93	7.2E+01	CR 51	9.8E+05
I 134	1.1E+04	Y 90	3.1E+03	ZR 95	2.2E+01	MN 54	1.4E+04
I 135	5.3E+04	SR 91	7.3E+03	NB 95	1.6E+01	MN 56	1.2E+04
		SR 92	5.3E+03	RU 103	4.3E+01	CO 58	2.9E+04
		MO 99	2.4E+04	RH 103M	4.3E+01	CO 60	8.8E+04
		TC 99M	2.4E+04	RU 106	1.3E+01	FE 55	4.5E+03
		TE 129MI	7.4E+03	RH 106	1.3E+01	FE 59	7.0E+01
		TE 131M	5.3E+02	LA 140	3.0E+02	NI 63	2.3E+02
		TE 132	1.4E+02	CE 141	5.6E+01	CU 64	6.8E+04
		CS 134	1.2E+04	CE 144	1.2E+01	ZN 65	7.9E+04
		CS 136	1.4E+03	PR 143	2.4E+00	AG 110M	4.1E+00
		CS 137	3.3E+04			W 187	1.3E+01
		CS 138	1.2E+03				
		BA 140	2.9E+04				
		NP 239	8.3E+04				
Total	**4.1E+05**	**Total**	**2.6E+05**	**Total**	**7.4E+02**	**Total**	**1.3E+06**

Table 12.2-13d Liquid Radwaste Component Inventories— LCW Sample Tank

Source Volume = 105m^3

Total megabecquerel = 8.77E 03

Halogens		Soluble Fission Products		Insoluble Fission Products		Activation Products	
Isotope	**MBq**	**Isotope**	**MBq**	**Isotope**	**MBq**	**Isotope**	**MBq**
I 131	1.2E+03	RB 89	2.9E+00	Y 91	2.0E+00	NA 24	2.5E+02
I 132	1.7E+02	SR 89	5.1E+01	Y 92	4.1E+00	P 32	6.9E+01
I 133	1.1E+03	SR 90	4.2E+00	Y 93	6.9E+00	CR 51	2.7E+03
I 134	1.1E+02	Y 90	4.2E+00	ZR 95	4.1E–01	MN 54	2.2E+01
I 135	5.2E+02	SR 91	7.0E+01	NB 95	3.7E–01	MN 56	1.4E+02
		SR 92	5.3E+01	RU 103	9.7E–01	CO 58	5.8E+01
		MO 99	2.0E+02	RH 103M	9.7E–01	CO 60	1.3E+02
		TC 99M	2.0E+02	RU 106	1.8E–01	FE 55	6.0E+01
		TE 129M	1.8E+01	RH 106	1.8E–01	FE 59	1.5E+00
		TE 131M	4.6E+00	LA 140	1.3E+01	NI 63	3.3E–01
		TE 132	1.1E+00	CE 141	1.4E+00	CU 64	6.4E+02
		CS 134	1.6E+01	CE 144	1.7E–01	ZN 65	1.2E+02
		CS 136	6.0E+00	PR 143	1.0E–01	AG 110M	5.8E–02
		CS 137	4.4E+01			W 187	1.1E+00
		CS 138	1.2E+01				
		BA 140	1.3E+02				
		NP 239	6.8E+02				
Total	**3.1E+03**	**Total**	**1.5E+03**	**Total**	**3.1E+01**	**Total**	**4.2E+03**

Table 12.2-13e Liquid Radwaste Component Inventories— HCW Collector Tank

Source Volume = 15m^3

Total megabecquerel = 2.08E 03

Halogens		Soluble Fission Products		Insoluble Fission Products		Activation Products	
Isotope	**MBq**	**Isotope**	**MBq**	**Isotope**	**MBq**	**Isotope**	**MBq**
I 131	8.5E+01	RB 89	1.8E+00	Y 91	7.2E–01	NA 24	1.1E+02
I 132	1.1E+02	SR 89	1.8E+00	Y 92	2.6E+01	P 32	3.6E+00
I 133	4.2E+02	SR 90	1.3E–01	Y 93	3.7E+01	CR 51	1.1E+02
I 134	7.0E+01	Y 90	1.3E–01	ZR 95	1.4E–01	MN 54	1.3E+00
I 135	3.0E+02	SR 91	3.7E+01	NB 95	1.4E–01	MN 56	1.6E+02
		SR 92	3.3E+01	RU 103	3.6E–01	CO 58	3.6E+00
		MO 99	3.2E+01	RH 103M	3.6E–01	CO 60	7.2E+00
		TC 99M	3.2E+01	RU 106	5.5E–02	FE 55	1.8E+01
		TE 129M	7.1E–01	RH 106	5.5E–02	FE 59	5.4E–01
		TE 131M	1.4E+00	LA 140	7.0E+00	NI 63	1.8E–02
		TE 132	1.7E–01	CE 141	5.4E–01	CU 64	3.1E+02
		CS 134	4.9E–01	CE 144	5.5E–02	ZN 65	3.7E+00
		CS 136	3.2E–01	PR 143	5.4E–02	AG 110M	1.8E–02
		CS 137	1.3E+00			W 187	4.0E+00
		CS 138	7.6E+00				
		BA 140	7.0E+00				
		NP 239	1.3E+02				
Total	**9.9E+02**	**Total**	**2.9E+02**	**Total**	**7.2E+01**	**Total**	**7.3E+02**

Table 12.2-13f Liquid Radwaste Component Inventories— HCW Demineralizer

Source Volume = 1.2m^3 (Resin)

Total megabecquerel = 1.42E 02

Halogens		Soluble Fission Products		Insoluble Fission Products		Activation Products	
Isotope	**MBq**	**Isotope**	**MBq**	**Isotope**	**MBq**	**Isotope**	**MBq**
I 131	1.0E+01	RB 89	1.8E–02	Y 91	5.2E–01	NA 24	1.7E+00
I 132	1.1E+00	SR 89	1.2E+00	Y 92	2.6E–01	P 32	7.5E–01
I 133	7.6E+00	SR 90	2.0E–01	Y 93	4.5E–01	CR 51	4.4E+01
I 134	7.0E–01	Y 90	2.0E–01	ZR 95	1.1E–01	MN 54	1.7E+00
I 135	3.3E+00	SR 91	4.6E–01	NB 95	7.0E–02	MN 56	1.6E+00
		SR 92	3.3E–01	RU 103	2.0E–01	CO 58	3.0E+00
		MO 99	1.5E+00	RH 103M	2.0E–01	CO 60	1.1E+01
		TC 99M	1.5E+00	RU 106	7.6E–02	FE 55	2.8E+01
		TE 129M	3.4E–01	RH 106	7.6E–02	FE 59	3.2E–01
		TE 131M	3.3E–02	LA 140	1.3E+00	NI 63	2.9E–02
		TE 132	8.6E–03	CE 141	2.5E–01	CU 64	4.3E+00
		CS 134	7.4E–01	CE 144	7.3E–02	ZN 65	4.7E+00
		CS 136	6.3E–02	PR 143	1.1E–02	AG 110M	2.4E–02
		CS 137	2.1E+00			W 187	8.0E–02
		CS 138	7.6E–02				
		BA 140	1.3E+00				
		NP 239	5.1E+00				
Total	**2.3E+01**	**Total**	**1.5E+01**	**Total**	**3.6E+00**	**Total**	**1.0E+02**

Table 12.2-14 Offgas System Inventories*

Isotopic Inventories (megabecquerel) Valid at t = 60 years							
Inventory	Preheater	Recombiner	Condenser	Cooler	Tank 1	Tank 2	Tank 3
BA-137M	0.0E+00	0.0E+00	0.0E+00	0.0E+00	1.1E+01	0.0E+00	0.0E+00
BA-139	0.0E+00	0.0E+00	2.3E+01	2.3E–01	5.6E+02	0.0E+00	0.0E+00
BA-140	0.0E+00	0.0E+00	4.1E–01	0.0E+00	1.7E+00	0.0E+00	0.0E+00
BA-141	0.0E+00	0.0E+00	1.3E+00	0.0E+00	0.0E+00	0.0E+00	0.0E+00
BA-142	0.0E+00	0.0E+00	1.1E–01	0.0E+00	0.0E+00	0.0E+00	0.0E+00
CS-135	0.0E+00	0.0E+00	0.0E+00	0.0E+00	4.1E–05	2.9E–08	0.0E+00
CS-137	0.0E+00	0.0E+00	0.0E+00	0.0E+00	1.1E+01	0.0E+00	0.0E+00
CS-138	1.0E+00	1.0E+00	1.4E+03	1.0E+02	2.9E+03	0.0E+00	0.0E+00
CS-139	8.5E+00	8.5E+00	9.6E+03	3.6E+02	5.6E+02	0.0E+00	0.0E+00
CS-140	5.9E+01	4.8E+01	3.2E+04	3.7E+02	1.9E+00	0.0E+00	0.0E+00
CS-141	7.8E–01	6.7E–01	7.0E+01	0.0E+00	0.0E+00	0.0E+00	0.0E+00
CS-142	2.8E–01	2.0E–01	1.7E+00	00.E+00	0.0E+00	0.0E+00	0.0E+00
KR-83M	1.7E+02	7.0E+01	6.3E+03	1.7E+03	7.0E+05	4.8E+05	5.2E+01
KR-85	1.1E+00	4.8E–01	4.1E+01	1.1E+01	6.7E+03	6.7E+04	6.7E+04
KR-85M	2.9E+02	1.2E+02	1.1E+04	3.0E+03	1.6E+06	3.5E+06	7.8E+10
KR-87	9.3E+02	4.1E+02	3.5E+04	9.6E+03	3.5E+06	1.3E+06	1.8E+00
KR-88	9.6E+02	4.1E+02	5.9E+02	4.4E+01	4.8E+06	5.9E+06	1.3E+04
KR-89	5.9E+03	2.4E+03	2.0E+05	4.8E+04	7.0E+05	0.0E+00	0.0E+00
KR-90	1.0E+04	4.1E+03	2.3E+05	3.1E+04	1.3E+04	0.0E+00	0.0E+00
KR-91	5.2E+03	2.0E+03	4.4E+04	5.9E+02	2.0E–01	0.0E+00	0.0E+00
KR-92	7.8E+01	2.3E+01	1.0E+02	0.0E+00	0.0E+00	0.0E+00	0.0E+00
KR-93	2.4E+00	5.9E–01	1.8E+00	0.0E+00	0.0E+00	0.0E+00	0.0E+00
KR-94	6.3E–02	0.0E+00	0.0E+00	0.0E+00	0.0E+00	0.0E+00	0.0E+00
N-13	8.5E–02	3.6E–02	3.1E+00	8.5E–01	4.4E+01	6.7E+00	0.0E+00
N-16	5.9E+01	2.2E+01	4.1E+02	2.8E+00	3.0E–02	0.0E+00	0.0E+00
N-17	2.4E–03	8.5E–04	8.9E–03	2.6E–08	0.0E+00	0.0E+00	0.0E+00
O-19	1.8E+01	7.4E+00	3.7E+02	4.8E+01	5.6E+01	4.8E–02	0.0E+00
RB-88	0.0E+00	0.0E+00	0.0E+00	0.0E+00	7.4E+02	4.1E+02	9.3E–01
RB-89	2.8E+00	2.8E+00	4.1E+03	2.5E+02	2.6E+03	0.0E+00	0.0E+00
RB-90	2.7E+01	2.7E+01	2.8E+04	9.3E+02	2.4E+02	0.0E+00	0.0E+00
RB-90M	0.0E+00	0.0E+00	0.0E+00	0.0E+00	3.2E+01	0.0E+00	0.0E+00
RB-91	4.1E+01	3.7E+01	1.8E+04	5.6E+01	0.0E+00	0.0E+00	0.0E+00
RB-92	7.8E+00	6.3E+00	1.9E+02	0.0E+00	0.0E+00	0.0E+00	0.0E+00
RB-93	1.9E–01	1.6E–01	4.4E+00	0.0E+00	0.0E+00	0.0E+00	0.0E+00

Table 12.2-14 Offgas System Inventories* (Continued)

Isotopic Inventories (megabecquerel) Valid at t = 60 years							
Inventory	**Preheater**	**Recombiner**	**Condenser**	**Cooler**	**Tank 1**	**Tank 2**	**Tank 3**
RB-94	0.0E+00	0.0E+00	8.5E–02	0.0E+00	0.0E+00	0.0E+00	0.0E+00
SR-90	0.0E+00	0.0E+00	4.1E–04	3.2E–06	1.0E+00	0.0E+00	0.0E+00
SR-92	0.0E+00	0.0E+00	5.9E–01	0.0E+00	0.0E+00	0.0E+00	0.0E+00
SR-93	0.0E+00	0.0E+00	2.8E–01	0.0E+00	0.0E+00	0.0E+00	0.0E+00
XE-131M	7.0E–01	3.0E–01	2.7E+01	7.4E+00	6.7E+04	4.4E+05	1.9E+05
XE-133	4.1E+02	1.6E+02	1.5E+04	4.1E+01	3.4E+07	1.4E+08	2.1E+07
XE-133M	1.3E+01	5.6E+00	4.8E+02	1.4E+02	1.1E+06	1.9E+06	2.2E+04
XE-135	1.1E+03	4.4E+02	4.1E+04	1.1E+04	3.6E+07	2.9E+06	0.0E+00
XE-135M	1.3E+03	5.2E+02	4.4E+04	1.3E+04	1.1E+06	0.0E+00	0.0E+00
XE-137	7.0E+03	2.9E+03	2.4E+05	6.3E+04	1.1E+06	0.0E+00	0.0E+00
XE-138	4.4E+03	1.8E+03	1.6E+05	4.1E+04	3.5E+06	0.0E+00	0.0E+00
XE-139	1.0E+04	4.4E+03	2.6E+05	4.1E+04	3.3E+04	0.0E+00	0.0E+00
XE-140	7.0E+03	2.8E+03	9.6E+04	4.8E+03	3.7E+01	0.0E+00	0.0E+00
XE-141	4.1E+00	1.1E+01	4.8E+01	0.0E+00	0.0E+00	0.0E+00	0.0E+00
XE-142	1.1E+00	2.8E–01	7.8E–01	0.0E+00	0.0E+00	0.0E+00	0.0E+00
Y-90	0.0E+00	0.0E+00	0.0E+00	0.0E+00	8.5E–01	0.0E+00	0.0E+00
Totals	**5.5E+04**	**2.3E+04**	**1.5E+06**	**2.7E+05**	**8.8E+07**	**1.6E+08**	**7.8E+10**

* Inventory based upon 1.42E–02 m^3/second flow with a noble gas and N–16 mixture taken from Table 11.1-1 and 11.1-4. Inventories are cummulative for 60 years with a 90% availability. For hydrogen water chemistry, multiply the N-16 values by a factor of 6. Inventories are given in Megaeacquerels per tank. Tanks 2 and 3 are charcoal tanks in series subsequent to Tank 1. There are four each of Tanks 2 and 3.

Table 12.2-15a Solid Radwaste Component Inventories CUW Backwash Receiving Tank

Source Volume = 35m^3

Total megabecquerel = 9.18E 07

Halogens		Soluble Fission Products		Insoluble Fission Products		Activation Products	
Isotope	**MBq**	**Isotope**	**MBq**	**Isotope**	**MBq**	**Isotope**	**MBq**
I 131	1.2E+07	Rb 89	2.2E+04	Y 91	2.0E+05	NA 24	2.1E+06
I 132	1.3E+06	SR 89	5.0E+05	Y 92	3.3E+05	P 32	6.7E+05
I 133	9.6E+06	SR 90	4.1E+04	Y 93	5.6E+05	CR 51	2.6E+07
I 134	8.7E+05	Y 90	4.1E+04	ZR 95	4.1E+04	MN 54	4.0E+05
I 135	4.1E+06	SR 91	5.7E+05	NB 95	3.7E+04	MN 56	1.9E+06
		SR 92	4.2E+05	RU 103	9.5E+04	CO 58	1.0E+06
		MO 99	1.8E+06	RH 103M	9.5E+04	CO 60	2.3E+06
		TC 99M	1.8E+06	RU 106	1.7E+04	FE 55	5.9E+06
		TE 129M	1.8E+05	RH 106	1.7E+04	FE 59	1.5E+05
		TE 131M	4.1E+04	LA 140	1.3E+06	NI 63	6.0E+03
		TE 132	1.1E+04	CE 141	1.4E+05	CU 64	5.3E+06
		CS 134	1.6E+05	CE 144	1.7E+04	ZN 65	1.1E+06
		CS 136	5.8E+04	PR 143	9.9E+03	AG 110M	5.7E+03
		CS 137	4.3E+05			W 187	1.0E+05
		CS 138	9.4E+04				
		BA 140	1.3E+06				
		NP 239	6.4E+06				
Total	**2.8E+07**	**Total**	**1.4E+07**	**Total**	**2.8E+06**	**Total**	**4.8E+07**

Table 12.2-15b Solid Radwaste Component Inventories CF Backwash Receiving Tank

Source Volume = 35m^3

Total megabecquerel = 2.62E 05

Halogens		Soluble Fission Products		Insoluble Fission Products		Activation Products	
Isotope	**MBq**	**Isotope**	**MBq**	**Isotope**	**MBq**	**Isotope**	**MBq**
I 131	0.0E+00	RB 89	0.0E+00	Y 91	4.6E+03	NA 24	0.0E+00
I 132	0.0E+00	SR 89	0.0E+00	Y 92	5.8E+03	P 32	0.0E+00
I 133	0.0E+00	SR 90	0.0E+00	Y 93	1.0E+04	CR 51	0.0E+00
I 134	0.0E+00	Y 90	0.0E+00	ZR 95	9.3E+02	MN 54	4.7E+03
I 135	0.0E+00	SR 91	0.0E+00	NB 95	8.1E+02	MN 56	1.8E+04
		SR 92	0.0E+00	RU 103	2.1E+03	CO 58	1.2E+04
		MO 99	0.0E+00	RH 103M	2.1E+03	CO 60	2.8E+04
		TC 99M	0.0E+00	RU 106	4.1E+02	FE 55	1.4E+05
		TE 129M	0.0E+00	RH 106	4.1E+02	FE 59	3.3E+03
		TE 131M	0.0E+00	LA 140	2.5E+04	NI 63	7.0E+01
		TE 132	0.0E+00	CE 141	3.0E+03	CU 64	0.0E+00
		CS 134	0.0E+00	CE 144	4.1E+02	ZN 65	0.0E+00
		CS 136	0.0E+00	PR 143	2.0E+02	AG 110M	1.3E+02
		CS 137	0.0E+00			W 187	1.8E+03
		CS 138	0.0E+00				
		BA 140	0.0E+00				
		NP 239	0.0E+00				
Total	**0.0E+00**	**Total**	**0.0E+00**	**Total**	**5.6E+04**	**Total**	**2.1E+05**

Table 12.2-15c Solid Radwaste Component Inventories Phase Separator

Source Volume = 3.95m^3 (Resin + Crud)

Total megabecquerel = 3.14E 08

Halogens		Soluble Fission Products		Insoluble Fission Products		Activation Products	
Isotope	**MBq**	**Isotope**	**MBq**	**Isotope**	**MBq**	**Isotope**	**MBq**
I 131	1.7E+07	RB 89	2.2E+04	Y 91	1.3E+06	NA 24	2.1E+06
I 132	1.3E+06	SR 89	2.8E+06	Y 92	3.3E+05	P 32	1.5E+06
I 133	9.6E+06	SR 90	5.9E+05	Y 93	5.7E+05	CR 51	9.5E+07
I 134	8.7E+05	Y 90	5.9E+05	ZR 95	2.8E+05	MN 54	4.8E+06
I 135	4.1E+06	SR 91	5.7E+05	NB 95	1.6E+05	MN 56	2.0E+06
		SR 92	4.2E+05	RU 103	4.6E+05	CO 58	7.5E+06
		MO 99	1.9E+06	RH 103M	4.6E+05	CO 60	3.3E+07
		TC 99M	1.9E+06	RU 106	2.2E+05	FE 55	8.1E+07
		TE 129M	7.5E+05	RH 106	2.2E+05	FE 59	7.8E+05
		TE 131M	4.2E+04	LA 140	2.6E+06	NI 63	8.6E+04
		TE 132	1.2E+04	CE 141	5.7E+05	CU 64	5.3E+06
		CS 134	2.1E+06	CE 144	2.1E+05	ZN 65	1.3E+07
		CS 136	1.2E+05	PR 143	2.1E+04	AG 110M	6.7E+04
		CS 137	6.2E+06			W 187	1.0E+05
		CS 138	9.4E+04				
		BA 140	2.5E+06				
		NP 239	6.5E+06				
Total	**3.3E+07**	**Total**	**2.7E+07**	**Total**	**7.3E+06**	**Total**	**2.5E+08**

Table 12.2-15d Solid Radwaste Component Inventories Spent Resin Storage Tank

Source Volume = 12.95m^3 (Resin)

Total megabecquerel = 9.21E 06

Halogens		Soluble Fission Products		Insoluble Fission Products		Activation Products	
Isotope	**MBq**	**Isotope**	**MBq**	**Isotope**	**MBq**	**Isotope**	**MBq**
I 131	2.3E+06	RB 89	4.8E+02	Y 91	1.8E+03	NA 24	4.6E+04
I 132	2.4E+05	SR 89	4.7E+04	Y 92	7.7E+02	P 32	2.5E+04
I 133	1.7E+06	SR 90	2.5E+04	Y 93	1.3E+03	CR 51	1.6E+06
I 134	1.6E+05	Y 90	2.5E+04	ZR 95	4.1E+02	MN 54	6.8E+04
I 135	7.5E+05	SR 91	1.2E+04	NB 95	2.2E+02	MN 56	2.3E+04
		SR 92	8.9E+03	RU 103	6.4E+02	CO 58	6.9E+04
		MO 99	4.0E+04	RH 103M	6.4E+02	CO 60	7.1E+05
		TC 99M	4.0E+04	RU 106	7.4E+02	FE 55	4.0E+05
		TE 129M	1.2E+04	RH 106	7.4E+02	FE 59	1.1E+03
		TE 131M	8.8E+02	LA 140	4.0E+03	NI 63	2.1E+03
		TE 132	2.4E+02	CE 141	7.8E+02	CU 64	1.1E+05
		CS 134	6.9E+04	CE 144	6.1E+02	ZN 65	3.0E+05
		CS 136	2.1E+03	PR 143	3.3E+01	AG 110M	1.9E+02
		CS 137	2.6E+05			W 187	2.4E+02
		CS 138	2.0E+03				
		BA 140	4.4E+04				
		NP 239	1.4E+05				
Total	**5.2E+06**	**Total**	**7.2E+05**	**Total**	**1.3E+04**	**Total**	**3.3E+06**

Table 12.2-15e Solid Radwaste Component Inventories Concentrated Waste Tank

Source Volume = 6.75m^3

Total megabecquerel = 1.16E 04

Halogens		Soluble Fission Products		Insoluble Fission Products		Activation Products	
Isotope	**MBq**	**Isotope**	**MBq**	**Isotope**	**MBq**	**Isotope**	**MBq**
I 131	1.0E+03	RB 89	1.8E+00	Y 91	4.0E+01	NA 24	1.7E+02
I 132	1.1E+02	SR 89	9.5E+01	Y 92	2.6E+01	P 32	7.4E+01
I 133	7.6E+02	SR 90	1.1E+01	Y 93	4.5E+01	CR 51	4.0E+03
I 134	7.0E+01	Y 90	1.1E+01	ZR 95	8.4E+00	MN 54	1.0E+02
I 135	3.3E+02	SR 91	4.6E+01	NB 95	6.1E+00	MN 56	1.6E+02
		SR 92	3.3E+01	RU 103	1.7E+01	CO 58	2.2E+02
		MO 99	1.5E+02	RH 103M	1.7E+01	CO 60	6.4E+02
		TC 99M	1.5E+02	RU 106	4.6E+00	FE 55	1.6E+03
		TE 129M	2.9E+01	RH 106	4.6E+00	FE 59	2.7E+01
		TE 131M	3.3E+00	LA 140	1.3E+02	NI 63	1.6E+00
		TE 132	8.6E–01	CE 141	2.2E+01	CU 64	4.3E+02
		CS 134	4.3E+01	CE 144	4.4E+00	ZN 65	2.9E+02
		CS 136	6.2E+00	PR 143	1.1E+00	AG 110M	1.5E+00
		CS 137	1.2E+02			W 187	8.0E+00
		CS 138	7.6E+00				
		BA 140	1.3E+02				
		NP 239	5.1E+02				
Total	**2.3E+03**	**Total**	**1.3E+03**	**Total**	**3.3E+02**	**Total**	**7.7E+03**

Table 12.2-15f Solid Radwaste Component Inventories
Solids Dryer Feed Tank

Source Volume = 6.75m^3

Total megabecquerel = 1.16E 04

Halogens		Soluble Fission Products		Insoluble Fission Products		Activation Products	
Isotope	**MBq**	**Isotope**	**MBq**	**Isotope**	**MBq**	**Isotope**	**Mbq**
I 131	1.0E+03	RB 89	1.8E+00	Y 91	4.0E+01	NA 24	1.7E+02
I 132	1.1E+02	SR 89	9.5E+01	Y 92	2.6E+01	P 32	7.4E+01
I 133	7.6E+02	SR 90	1.1E+01	Y 93	4.5E+01	CR 51	4.0E+03
I 134	7.0E+01	Y 90	1.1E+01	ZR 95	8.4E+00	MN 54	1.0E+02
I 135	3.3E+02	SR 91	4.6E+01	NB 95	6.1E+00	MN 56	1.6E+02
		SR 92	3.3E+01	RU 103	1.7E+01	CO 58	2.2E+02
		MO 99	1.5E+02	RH 103M	1.7E+01	CO 60	6.4E+02
		TC 99M	1.5E+02	RU 106	4.6E+00	FE 55	1.6E+03
		TE 129M	2.9E+01	RH 106	4.6E+00	FE 59	2.7E+01
		TE 131M	3.3E+00	LA 140	1.3E+02	NI 63	1.6E+00
		TE 132	8.6E–01	CE 141	2.2E+01	CU 64	4.3E+02
		CS 134	4.3E+01	CE 144	4.4E+00	ZN 65	2.9E+02
		CS 136	6.2E+00	PR 143	1.1E+00	AG 110M	1.5E+00
		CS 137	1.2E+02			W 187	8.0E+00
		CS 138	7.6E+00				
		BA 140	1.3E+02				
		NP 239	5.1E+02				
Total	**2.3E+03**	**Total**	**1.3E+03**	**Total**	**3.3E+02**	**Total**	**7.7E+03**

Activity: Same as **Concentrated Waste Tank**

Table 12.2-15g Solid Radwaste Component Inventories Solids Dryer (Outlet)

Concentration = 7.99E 00 MBq/cm^3

Halogens		Soluble Fission Products		Insoluble Fission Products		Activation Products	
Isotope	**MBq/cm^3**	**Isotope**	**MBq/cm^3**	**Isotope**	**MBq/cm^3**	**Isotope**	**MBq/cm^3**
I 131	7.1E–03	RB 89	1.3E–05	Y 91	2.7E–04	NA 24	1.2E–03
I 132	7.3E–04	SR 89	6.5E–04	Y 92	1.8E–04	P 32	5.1E–04
I 133	5.2E–03	SR 90	7.8E–05	Y 93	3.1E–04	CR 51	2.7E–02
I 134	4.8E–04	Y 90	7.8E–05	ZR 95	5.7E–05	MN 54	7.1E–04
I 135	2.3E–03	SR 91	3.1E–04	NB 95	4.2E–05	MN 56	1.1E–03
		SR 92	2.3E-04	RU 103	1.1E–04	CO 58	1.5E–03
		MO 99	1.0E–03	RH 103M	1.1E–04	CO 60	4.4E–03
		TC 99M	1.0E–03	RU 106	3.1E–05	FE 55	1.1E–02
		TE 129M	2.0E–04	RH 106	3.1E–05	FE 59	1.8E–04
		TE 131M	2.3E–05	LA 140	9.1E–04	NI 63	1.1E–05
		TE 132	5.9E–06	CE 141	1.5E–04	CU 64	2.9E–03
		CS 134	2.9E–04	CE 144	3.0E–05	ZN 65	2.0E–03
		CS 136	4.3E–05	PR 143	7.3E–06	AG 110M	1.0E–05
		CS 137	8.2E–04			W 187	5.5E–05
		CS 138	5.2E–05				
		BA 140	9.1E–04				
		NP 239	3.5E–03				
Total	**1.6E–02**	**Total**	**9.2E–03**	**Total**	**2.2E–03**	**Total**	**5.3E–02**

Table 12.2-15h Solid Radwaste Component Inventories Solids Dryer Pelletizer

Source Volume= 2.00E 05 cm^3

Concentration = 1.46E–01 MBq/cm^3

Halogens		Soluble Fission Products		Insoluble Fission Products		Activation Products	
Isotope	**MBq/cm^3**	**Isotope**	**MBq/cm^3**	**Isotope**	**MBq/cm^3**	**Isotope**	**MBq/cm^3**
I 131	1.3E–02	RB 89	2.3E–05	Y 91	5.0E–04	NA 24	2.1E–03
I 132	1.3E–03	SR 89	1.2E–03	Y 92	3.2E–04	P 32	9.3E–04
I 133	9.5E–03	SR 90	1.4E–04	Y 93	5.6E–04	CR 51	5.0E–02
I 134	8.8E–04	Y 90	1.4E–04	ZR 95	1.0E–04	MN 54	1.3E–03
I 135	4.1E–03	SR 91	5.7E–04	NB 95	7.6E–05	MN 56	1.9E–03
		SR 92	4.2E–04	RU 103	2.1E–04	CO 58	2.7E–03
		MO 99	1.8E–03	RH 103M	2.1E–04	CO 60	8.0E–03
		TC 99M	1.8E–03	RU 106	5.7E–05	FE 55	2.0E–02
		TE 129M	3.7E–04	RH 106	5.7E–05	FE 59	3.3E–04
		TE 131M	4.1E–05	LA 140	1.7E–03	NI 63	2.1E–05
		TE 132	1.1E–05	CE 141	2.7E–04	CU 64	5.3E–03
		CS 134	5.3E–04	CE 144	5.5E–05	ZN 65	3.6E–03
		CS 136	7.7E–05	PR 143	1.3E–05	AG 110M	1.8E–05
		CS 137	1.5E–03			W 187	1.0E–04
		CS 138	9.5E–05				
		BA 140	1.7E–03				
		NP 239	6.4E–03				
Total	**2.9E–02**	**Total**	**1.7E–02**	**Total**	**4.1E–03**	**Total**	**9.6E–02**

Table 12.2-15i Solid Radwaste Component Inventories Solids Mist Separator (Steam)

Concentration = 1.91E–06 MBq/cm^3

Halogens		Soluble Fission Products		Insoluble Fission Products		Activation Products	
Isotope	**MBq/cm^3**	**Isotope**	**MBq/cm^3**	**Isotope**	**MBq/cm^3**	**Isotope**	**MBq/cm^3**
I 131	1.69E–07	RB 89	2.99E–10	Y 91	6.55E–09	NA 24	2.80E–08
I 132	1.75E–08	SR 89	1.55E–08	Y 92	4.25E–09	P 32	1.22E–08
I 133	1.25E–07	SR 90	1.88E–09	Y 93	7.33E–09	CR 51	6.51E–07
I 134	1.15E–08	Y 90	1.88E–09	ZR 95	1.37E–09	MN 54	1.71E–08
I 135	5.44E–08	SR 91	7.47E–09	NB 95	9.95E–10	MN 56	2.55E–08
		SR 92	5.48E–09	RU 103	2.72E–09	CO 58	3.59E–08
		MO 99	2.41E–08	RH 103M	2.72E–09	CO 60	1.05E–07
		TC 99M	2.41E–08	RU 106	7.47E–10	FE 55	2.62E–07
		TE 129M	4.85E–09	RH 106	7.47E–10	FE 59	4.37E–09
		TE 131M	5.40E–10	LA 140	2.17E–08	NI 63	2.70E–10
		TE 132	1.41E–10	CE 141	3.60E–09	CU 64	6.96E–08
		CS 134	6.99E–09	CE 144	7.29E–10	ZN 65	4.77E–08
		CS 136	1.02E–09	PR 143	1.75E–10	AG 110M	2.39E–10
		CS 137	1.96E–08			W 187	1.31E–09
		CS 138	1.25E–09				
		BA 140	2.17E–08				
		NP 239	8.32E–08				
Total	**3.77E–07**	**Total**	**2.20E–07**	**Total**	**5.36E–08**	**Total**	**1.26E–06**

Table 12.2-15j Solid Radwaste Component Inventories Solids Condenser

Concentration = 3.2E–03 MBq/cm^3

Halogens		Soluble Fission Products		Insoluble Fission Products		Activation Products	
Isotope	**MBq/cm^3**	**Isotope**	**MBq/cm^3**	**Isotope**	**MBq/cm^3**	**Isotope**	**MBq/cm^3**
I 131	2.8E–04	RB 89	5.0E–07	Y 91	1.1E–05	NA 24	4.7E–05
I 132	2.9E–05	SR 89	2.6E–05	Y 92	7.1E–06	P 32	2.0E–05
I 133	2.1E–04	SR 90	3.1E–06	Y 93	1.2E–05	CR 51	1.1E–03
I 134	1.9E–05	Y 90	3.1E–06	ZR 95	2.3E–06	MN 54	2.9E–05
I 135	9.1E–05	SR 91	1.3E–05	NB 95	1.7E–06	MN 56	4.3E–05
		SR 92	9.2E–06	RU 103	4.6E–06	CO 58	6.0E–05
		MO 99	4.0E–05	RH 103M	4.6E–06	CO 60	1.8E–04
		TC 99M	4.0E–05	RU 106	1.2E–06	FE 55	4.4E–04
		TE 129M	8.1E–06	RH 106	1.2E–06	FE 59	7.3E–06
		TE 131M	9.1E–07	LA 140	3.6E–05	NI 63	4.5E–07
		TE 132	2.4E–07	CE 141	6.0E–06	CU 64	1.2E–04
		CS 134	1.2E–05	CE 144	1.2E–06	ZN 65	8.0E–05
		CS 136	1.7E–06	PR 143	2.9E–07	AG 110M	4.0E–07
		CS 137	3.3E–05			W 187	2.2E–06
		CS 138	2.1E–06				
		BA 140	3.6E–05				
		NP 239	1.4E–04				
Total	**6.3E–04**	**Total**	**3.7E–04**	**Total**	**9.0E–05**	**Total**	**2.1E–03**

Table 12.2-15k Solid Radwaste Component Inventories Solids Drum

Source Volume= 2.00E 05 cm^3

Concentration = 1.46E–01 MBq/cm^3

Halogens		Soluble Fission Products		Insoluble Fission Products		Activation Products	
Isotope	**MBq/cm^3**	**Isotope**	**MBq/cm^3**	**Isotope**	**MBq/cm^3**	**Isotope**	**MBq/cm^3**
I 131	1.3E–02	RB 89	2.3E–05	Y 91	5.0E–04	NA 24	2.13E–03
I 132	1.3E–03	SR 89	1.2E–03	Y 92	3.2E–04	P 32	9.32E–04
I 133	9.5E–03	SR 90	1.4E–04	Y 93	5.6E–04	CR 51	4.96E–02
I 134	8.8E–04	Y 90	1.4E–04	ZR 95	1.0E–04	MN 54	1.30E–03
I 135	4.1E–03	SR 91	5.7E–04	NB 95	7.6E–05	MN 56	1.94E–03
		SR 92	4.2E–04	RU 103	2.1E–04	CO 58	2.74E–03
		MO 99	1.8E–03	RH 103M	2.1E–04	CO 60	7.99E–03
		TC 99M	1.8E–03	RU 106	5.7E–05	FE 55	1.99E–02
		TE 129M	3.7E–04	RH 106	5.7E–05	FE 59	3.33E–04
		TE 131M	4.1E–05	LA 140	1.7E–03	NI 63	2.06E–05
		TE 132	1.1E–05	CE 141	2.7E–04	CU 64	5.29E–03
		CS 134	5.3E–04	CE 144	5.5E–05	ZN 65	3.64E–03
		CS 136	7.7E–05	PR 143	1.3E–05	AG 110M	1.83E–05
		CS 137	1.5E–03			W 187	9.99E–05
		CS 138	9.5E–05				
		BA 140	1.7E–03				
		NP 239	6.4E–03				
Total	**2.9E–02**	**Total**	**1.7E–02**	**Total**	**4.1E–03**	**Total**	**9.60E–02**

Activity: Same as Solids Peletizer

Table 12.2-16 FPC Filter Demineralizer

Source Volume = 20m^3/Batch (Backwash)

Total megabecquerel = 3.77E 06

Halogens		Soluble Fission Products		Insoluble Fission Products		Activation Products	
Isotope	**MBq/cm^3**	**Isotope**	**MBq/cm^3**	**Isotope**	**MBq/cm^3**	**Isotope**	**MBq/cm^3**
I 131	4.07E+05	RB 89	7.29E+02	Y 91	1.09E+04	NA 24	6.81E+04
I 132	4.25E+04	SR 89	2.65E+04	Y 92	1.04E+04	P 32	2.75E+04
I 133	3.05E+05	SR 90	2.55E+03	Y 93	1.79E+04	CR 51	1.27E+06
I 134	2.81E+04	Y 90	2.55E+03	ZR 95	2.24E+03	MN 54	242E+04
I 135	1.32E+05	SR 91	1.82E+04	NB 95	1.83E+03	MN 56	6.22E+04
		SR 92	1.34E+04	RU 103	4.88E+03	CO 58	5.81E+04
		MO 99	5.88E+04	RH 103M	4.88E+03	CO 60	1.43E+05
		TC 99M	5.88E+04	RU 106	1.05E+03	FE 55	3.60E+05
		TE 129M	8.99E+03	RH 106	1.05E+03	FE 59	7.62E+03
		TE 131M	1.32E+03	LA 140	4.96E+04	NI 63	3.66E+02
		TE 132	3.43E+02	CE 141	6.77E+03	CU 64	1.69E+05
		CS 134	9.66E+03	CE 144	1.04E+03	ZN 65	6.84E+04
		CS 136	2.32E+03	PR 143	3.96E+02	AG 110M	5.40E+01
		CS 137	2.66E+04			W 187	3.19E+03
		CS 138	3.04E+03				
		BA 140	4.96E+04				
		NP 239	2.03E+05				
Total	**9.15E+05**	**Total**	**4.87E+05**	**Total**	**1.13E+05**	**Total**	**2.26E+06**

Table 12.2-17 Radioactive Sources in the Suppression Pool Cleanup System

Class	Isotope	MBq	Class	Isotope	MBq
Class 2			Class 6 (Continued)		
	I-131	6.7E+02		SR91	4.4E+06
	I-132	2.0E+07		SR92	6.3E+06
	I-133	4.1E+07		Y-091	5.6E+04
	I-134	6.3E+06		Y-092	4.4E+06
	I-135	4.4E+07		Y-093	4.4E+06
Class 3					
	RB-089	6.3E+02		ZR-095	1.1E+04
	CS-134	3.7E+04		NB-095	1.1E+04
	CS-136	2.4E+04		MO-099	2.6E+06
	CS-137	9.6E+04		TCM099	2.6E+06
	CS-138	1.9E+05		RU-103	2.7E+04
Class 6				RHM103	2.7E+04
	NA-24	1.2E+07		RU-106	4.1E+03
	P-32	2.7E+05		RH-106	4.1E+03
	CR-51	8.1E+06		AGM110	1.4E+03
	MN-54	9.6E+04		TEM129	5.6E+04
	MN-56	3.0E+07		TEM131	1.3E+05
	FE-55	1.4E+06		TE-132	1.3E+04
	FE-59	4.1E+04		BA-140	5.6E+05
	CO-58	2.7E+05		LA-140	5.6E+05
	CO-60	5.6E+05		CE-141	4.1E+04
	NI-63	1.4E+03		CE-144	4.1E+03
	CU-64	3.5E+07		PR-144	4.1E+03
	ZN-65	2.7E+05		W-187	3.7E+05
	SR-089	1.3E+05		NP-239	1.0E+07
	SR-090	9.6E+03			
	Y-90	9.6E+03		**Total**	**2.4E+08**

Table 12.2-18a Radioactive Sources in the Control Rod Drive System

Control Rod Drive Radiation Survey Data		
	Gamma Dose Measured at Contact, mSvh	
Component	**Before Cleaning**	**After Cleaning**
Seal Housing (Spool Piece)	1.0E–01	0.0E+00
Rotating-ball Spindle	0.0E+00	2.0E–01
Hollow Piston	5.0E–01	2.5E–01
Throttle Bushing	4.0E–01	4.0E–01
Guide Tube	3.0E–01	2.0E–01
Motor/Synchro Assembly	2.0E-02	<1.0E–02
Cylinder Tube/Flange	2.2E+00	2.0E–01

Table 12.2-18b Control Blade Principal Isotopes

Isotopes	MBq/Blade
Cr-51	5.2E+09
Mn-54	3.4E+08
Fe-55	5.9E+09
Co-58m	3.3E+08
Co-60	4.1E+09
Ni-63	1.9E+08
Total	**1.6E+10**

Table 12.2-19 Annual Airborne Releases for Offsite Dose Evaluations (MBq)

Nuclide	R/B	Turbine	Radwaste	Mechanical Vacuum Pump	Turbine Seal	Offgas	Drywell
Kr-83m						2.0E–01	3.1E+01
Kr-85m	5.9E+04	3.7E+05				3.6E+05	1.3E+02
Kr-85					2.6E+02	2.1E+07	2.5E+01
Kr-87	2.9E+04	8.9E+05				1.8E–05	1.2E+02
Kr-88	5.9E+04	1.3E+06				3.2E+03	2.7E+02
Kr-89	2.9E+04	8.5E+06	4.4E+05				3.3E+01
Kr-90							1.2E+01
Xe-131m					2.2E+02	1.9E+06	1.2E+01
Xe-133m						3.1E+03	7.4E+01
Xe-133	1.6E+06	2.2E+06	3.2E+06	1.4E+07	1.1E+05	6.7E+07	4.4E+03
Xe-135m	8.9E+05	5.9E+06	7.8E+06		3.0E+05		3.3E+01
Xe-135	1.9E+06	4.8E+06	4.1E+06	5.6E+06	2.6E+05		1.0E+03
Xe-137	2.6E+06	1.5E+07	1.2E+06				4.8E+01
Xe-138	1.2E+05	1.5E+07	2.9E+04		9.3E+05		1.0E+02
Xe-139							1.5E+01
I -131	1.4E+03	5.6E+03	4.8E+02	2.0E+03	2.4E+01		9.6E+01
I -132	1.2E+04	4.8E+04	4.1E+03	1.7E+04			1.3E+01
I -133	9.3E+03	3.7E+04	3.3E+03	1.3E+04	1.6E+02		9.6E+01
I -134	2.0E+04	8.1E+04	7.4E+03	3.0E+04			8.9E+00
I -135	1.3E+04	5.2E+04	4.4E+03	1.9E+04			4.1E+01
H-3	1.1E+06	1.1E+06			2.2E+05		2.6E+05
C-14						3.4E+05	
Na-24							1.5E+02
P-32							3.4E+01
Ar-41						2.5E+05	
Cr-51	3.4E+01	2.7E+01	2.1E+01				1.2E+03
Mn-54	4.4E+01	1.8E+01	1.2E+02				1.7E+01

Table 12.2-19 Annual Airborne Releases for Offsite Dose Evaluations (MBq) (Continued)

Nuclide	R/B	Turbine	Radwaste	Mechanical Vacuum Pump	Turbine Seal	Offgas	Drywell
Mn-56							1.3E+02
Fe-55							2.4E+02
Fe-59	1.2E+01	3.0E+00	9.3E+00				6.7E+00
Co-58	9.3E+00	3.0E+01	5.9E+00				4.4E+01
Co-60	1.5E+02	3.0E+01	2.1E+02				9.6E+01
Ni-63							2.4E–01
Cu-64							3.7E+02
Zn-65	1.5E+02	1.8E+02	9.3E+00				4.8E+01
Rb-89							1.6E+00
Sr-89	1.5E+00	1.8E+02					2.2E+01
Sr-90	3.0E–01	5.9E–01					1.7E+00
Y-90							1.7E+00
Sr-91							3.7E+01
Sr-92							2.9E+01
Y-91							8.9E+00
Y-92							2.3E+01
Y-93							4.1E+01
Zr-95	3.0E+01	1.2E+00	2.4E+01				1.8E+00
Nb-95	3.0E+02	1.8E–01	1.2E–01				1.6E+00
Mo-99	2.0E+03	5.9E+01	9.3E–02				1.2E+02
Tc-99m							1.1E+01
Ru-103	1.3E+02	1.5E+00	3.0E–02				4.1E+00
Rh-103m							4.1E+00
Ru-106							7.0E–01
Rh-106							7.0E–01
Ag-110m	7.4E-02						6.7E–06
Sb-124	1.5E+00	3.0E+00	2.1E+00				

Table 12.2-19 Annual Airborne Releases for Offsite Dose Evaluations (MBq) (Continued)

Nuclide	R/B	Turbine	Radwaste	Mechanical Vacuum Pump	Turbine Seal	Offgas	Drywell
Te-129m							8.1E+00
Te-131m							2.8E+00
Te-132							7.0E–01
Cs-134	1.4E+02	5.9E+00	7.4E+01				6.3E+00
Cs-136	1.5E+01	3.0E+00					3.0E+00
Cs-137	1.8E+02	3.0E+01	1.2E+02				1.7E+01
Cs-138							6.3E+00
Ba-140	6.7E+02	3.0E+02	1.2E–01				6.7E+01
La-140							6.7E+01
Ce-141	2.7E+01	3.0E+02	2.1E–01				6.3E+00
Ce-144							7.0E–01
Pr-144							7.0E–01
W-187							7.0E+00
Np-239							4.4E+02

Table 12.2-20 Airborne Concentrations

Nuclide	Annual Average Airborne		Maximum Technical Specification (MBq/cm^3)
	Release (MBq/yr)	Concentration (MBq/cm^3)	
Kr-83m	3.1E+01	2.0E–18	5.2E–17
Kr-85m	7.8E+05	4.8E–14	7.4E–13
Kr-85	2.1E+07	1.3E–12	1.3E–12
Kr-87	9.3E+05	5.9E–14	1.6E–12
Kr-88	1.4E+06	8.9E–14	2.4E–12
Kr-89	8.9E+06	5.5E–13	1.5E–11
Kr-90	1.2E+01	7.8E–19	2.1E–17
Xe-131m	1.9E+06	1.2E–13	1.2E–13
Xe-133m	3.2E+03	2.0E–16	3.3E–16
Xe-133	8.9E+07	5.5E–12	4.1E–11
Xe-135m	1.5E+07	9.2E–13	2.4E–11
Xe-135	1.7E+07	1.0E–12	2.8E–11
Xe-137	1.9E+07	1.2E–12	3.1E–11
Xe-138	1.6E+07	1.0E–12	2.5E–11
Xe-139	1.5E+01	9.6E–19	2.6E–17
I-131	9.6E+03	5.9E–16	1.8E–14
I-132	8.1E+04	5.2E–15	1.6E–13
I-133	6.3E+04	4.1E–15	1.2E–13
I-134	1.4E+05	8.9E–15	2.7E–13
I-135	8.9E+04	5.5E–15	1.7E–13
H-3	2.7E+06	1.7E–13	1.7E–13
C-14	3.4E+05	2.2E–14	2.2E–14
Na-24	1.5E+02	9.2E–18	9.2E–18
P-32	3.4E+01	2.2E–18	2.2E–18
Ar-41	2.5E+05	1.6E–14	1.6E–14
Cr-51	1.3E+03	8.1E–17	2.3E–16

Table 12.2-20 Airborne Concentrations

Nuclide	Annual Average Airborne		Maximum Technical Specification (MBq/cm^3)
	Release (MBq/yr)	Concentration (MBq/cm^3)	
Mn-54	2.0E+02	1.3E–17	3.5E–16
Mn-56	1.3E+02	8.5E–18	8.5E–18
Fe-55	2.4E+02	1.5E–17	1.5E–17
Fe-59	3.0E+01	1.9E–18	4.4E–17
Co-58	8.9E+01	5.9E–18	8.9E–17
Co-60	4.8E+02	3.1E–17	7.4E–16
Ni-63	2.4E–01	1.5E–20	1.5E–20
Cu-64	3.7E+02	2.3E–17	2.3E–17
Zn-65	4.1E+02	2.5E–17	6.7E–16
Rb-89	1.6E+00	9.6E–20	9.6E–20
Sr-89	2.1E+02	1.3E–17	3.5E–20
Sr-90	2.6E+00	1.6E–19	1.9E–18
Y-90	1.7E+00	1.1E–19	1.1E–19
Sr-91	3.7E+01	2.4E–18	2.4E–18
Sr-92	2.9E+01	1.8E–18	1.8E–18
Y-91	8.9E+00	5.5E–19	5.5E–19
Y-92	2.3E+01	1.4E–18	1.4E–18
Y-93	4.1E+01	2.6E–18	2.6E–18
Zr-95	5.9E+01	3.7E–18	1.1E–16
Nb-95	3.1E+02	1.9E–17	5.9E–16
Mo-99	2.2E+03	1.4E–16	4.1E–15
Tc-99m	1.1E+01	7.4E–19	7.4E–19
Ru-103	1.3E+02	8.5E–18	2.5E–16
Rh-103m	4.1E+00	2.7E–19	2.7E–19
Ru-106	7.0E–01	4.4E–20	4.4E–20
Rh-106	7.0E–01	4.4E–20	4.4E–20

Table 12.2-20 Airborne Concentrations

Nuclide	Annual Average Airborne		Maximum Technical Specification (MBq/cm^3)
	Release (MBq/yr)	Concentration (MBq/cm^3)	
Ag-110m	7.4E–02	4.8E–21	1.4E–19
Sb-124	6.7E+00	4.1E–19	1.3E–17
Te-129m	8.1E+00	5.2E–19	5.2E–19
Te-131m	2.8E+00	1.8E–19	1.8E–19
Te-132	7.0E–01	4.4E–20	4.4E–20
Cs-134	2.3E+02	1.4E–17	4.1E–16
Cs-136	2.2E+01	1.3E–18	3.5E–17
Cs-137	3.5E+02	2.2E–17	6.3E–16
Cs-138	6.3E+00	4.1E–19	4.1E–19
Ba-140	1.0E+03	6.7E–17	1.9E–15
La-140	6.7E+01	4.1E–18	4.1E–18
Ce-141	3.4E+02	2.1E–17	6.3E–16
Ce-144	7.0E–01	4.4E–20	4.4E–20
Pr-144	7.0E–01	4.4E–20	4.4E–20
W-187	7.0E+00	4.4E–19	4.4E–19
Np-239	4.4E+02	2.7E–17	2.7E–17

Table 12.2-21 Average Annual Doses from Airborne Releases

Part A	**Doses from Noble Gas Releases (mSv)**							
		Dose						
	Gamma Air	1.3E–02						
	Beta Air	1.7E–02						
	Total Body	1.2E–02						
	Skin	2.7E–02						
Part B	**Inhalation Doses from Particulate Releases (mSv)**							
		Bone	**Liver**	**T body***	**Thyroid**	**Kidney**	**Lung**	**GI-LLI†**
	Adult	6.7E–06	5.8E–06	4.5E–06	2.6E–04	7.1E–06	7.4E–06	5.2E–06
	Teen	9.5E–06	7.0E–06	5.2E–06	3.4E–04	8.8E–06	9.7E–06	5.9E–06
	Child	1.3E–05	7.1E–06	5.6E–06	4.2E–06	8.6E–06	9.0E–06	5.6E–06
	Infant	9.5E–06	5.4E–06	3.8E–06	3.8E–04	5.7E–06	6.3E–06	3.6E–06
Part C	**Ground Shine Doses from Particulates Deposited on Ground (mSv)**							
			T body*	**Skin**				
		Dose	5.7E–04	6.7E–04				
Part D	**Ingestion Doses from Particulate Releases (mSv)**							
	Milk Consumption							
		Bone	**Liver**	**T body***	**Thyroid**	**Kidney**	**Lung**	**GI-LLI†**
	Adult	9.5E–05	3.4E–05	2.6E–05	2.2E–05	2.7E–05	1.8E–05	2.8E–05
	Teen	1.7E–04	6.0E–05	4.5E–05	3.9E–05	4.8E–05	3.3E–05	4.4E–05
	Child	4.2E–04	1.2E–04	1.0E–04	9.2E–05	1.0E–04	8.0E–05	8.6E–05
	Infant	8.1E–04	2.4E–04	2.0E–04	2.0E–04	2.0E–04	1.7E–04	2.2E–04
	Meat Consumption							
		Bone	**Liver**	**T body***	**Thyroid**	**Kidney**	**Lung**	**GI-LLI†**
	Adult	8.7E–05	2.3E–05	2.0E–05	3.7E–04	2.2E–05	1.6E–05	4.1E–05
	Teen	7.3E–05	1.9E–05	1.7E–05	2.7E–04	1.8E–05	1.4E–05	2.7E–05
	Child	1.4E–04	3.2E–05	3.0E–05	4.1E–04	3.1E–05	2.6E–05	3.3E–05
	Leafy Vegetable Consumption							
		Bone	**Liver**	**T body***	**Thyroid**	**Kidney**	**Lung**	**GI-LLI†**
	Adult	5.0E–05	1.8E–05	1.3E–05	29E–03	2.4E–05	6.1E–06	1.9E–05
	Teen	4.6E–05	1.6E–05	1.2E–05	2.3E–03	2.2E–05	5.7E–06	1.4E–05
	Child	8.3E–05	2.4E–05	1.9E–05	3.5E–03	3.0E–05	1.0E–05	1.5E–05
	Produce Consumption							
		Bone	**Liver**	**T body***	**Thyroid**	**Kidney**	**Lung**	**GI-LLI†**
	Adult	2.3E–04	4.7E–05	4.9E–05	1.4E–04	4.2E–05	3.7E–05	6.7E–05
	Teen	3.9E–04	8.0E–05	8.1E–05	2.1E–02	7.1E–05	6.5E–05	9.8E-05
	Child	9.4E–04	1.8E–04	1.9E–04	4.5E–04	1.7E–04	1.6E–04	1.8E–04

* T body—Total Body

† GI–LLI—Gastrointestinal–Lower Large Intestine

Table 12.2-22 Annual Average Liquid Releases

Nuclide	Annual Release (MBq/yr)	Concentration (MBq/ml)
I-131	1.18E+02	4.07E–11
I-132	9.62E+01	3.14E–11
I-133	3.70E+02	1.22E–10
I-134	6.29E+01	2.11E–11
I-135	2.78E+02	9.25E–11
H-3	2.22E+06	7.40E–07
C-14	5.92E+00	1.92E–12
Na-24	1.04E+02	3.40E–11
P-32	6.66E+00	2.22E–12
Cr-51	2.85E+02	9.62E–11
Mn-54	9.62E+01	3.22E–11
Mn-56	1.41E+02	4.81E–11
Co-56	1.92E+02	6.29E–11
Co-57	2.66E+00	8.88E–13
Co-58	3.33E+00	1.11E–12
Co-60	3.37E+02	1.11E–10
Fe-55	2.15E+02	7.03E–11
Fe-59	3.70E+00	1.26E–12
Ni-63	5.18E+00	1.74E–12
Cu-64	2.78E+02	9.25E–11
Zn-65	3.33E+00	1.11E–12
Rb-89	1.63E+00	5.55E–13
Sr-89	4.07E+00	1.29E–12
Sr-90	1.30E+00	4.44E–13
Y-90	1.15E–01	3.70E–14
Sr-91	3.33E+01	1.11E–11
Y-91	4.07E+00	1.33E–12
Sr-92	2.96E+01	9.99E–12
Y-92	2.22E+01	7.40E–12
Y-93	3.33E+01	1.11E–11
Zr-95	3.11E+01	1.04E–11

Table 12.2-22 Annual Average Liquid Releases (Continued)

Nuclide	Annual Release (MBq/yr)	Concentration (MBq/ml)
Nb-95	3.70E+01	1.26E–11
Mo-99	3.07E+01	1.04E–11
Tc-99m	2.96E+01	9.99E–12
Ru-103	6.66E+00	2.26E–12
Rh-103m	3.33E–01	1.11E–13
Ru-106	6.29E+00	2.00E–14
Rh-106	6.29E+00	2.07E–12
Ag-110m	1.22E+01	4.07E–12
Sb-124	1.33E+01	4.44E–12
Te-129m	6.29E–01	2.03E–13
Te-131m	1.26E+00	4.07E–13
Te-132	1.48E–01	4.81E–14
Cs-134	2.26E+02	7.77E–11
Cs-136	1.18E+01	4.07E–12
Cs-137	3.29E+02	1.11E–10
Cs-138	7.03E+00	2.29E–12
Ba-140	2.52E+01	8.51E–12
La-140	6.29E+00	2.11E–12
Ce-141	4.44E+00	1.55E-12
Ce-144	7.03E+01	2.40E–11
Pr-143	4.81E–02	1.63E–14
W-187	3.52E+00	1.18E–12
Np-239	1.15E+02	3.70E–11

Table 12.2-23 Liquid Pathway Dose Analysis (Assuming 5678 L/min Flow and a Dilution Factor of 10)

	Doses mSv/yr				
Pathway	**T Body**	**Skin**	**GI-LLI**	**Thyroid**	**Bone**
Drinking Water					
Adult	2.30E–03	0.00E+00	2.40E–03	4.20E–03	3.70E–04
Teen	1.60E–03	0.00E+00	1.70E–03	2.90E–03	2.60E–04
Child	1.60E–03	0.00E+00	1.70E–03	2.90E–03	2.60E–04
Infant	1.00E–03	0.00E+00	1.10E–03	1.90E–03	1.70E–04
Eating Plants					
Adult	1.30E–03	0.00E+00	3.90E–03	3.20E–04	1.50E–02
Teen	9.50E–04	0.00E+00	3.00E–03	2.50E–04	1.10E–02
Child	4.30E–04	0.00E+00	1.30E–03	1.10E–04	4.90E–03
Eating Invertebrates					
Adult	4.60E–04	0.00E+00	3.60E–03	4.80E–05	7.80E–04
Teen	3.50E–04	0.00E+00	2.80E–03	3.70E–05	6.00E–04
Child	1.60E–04	0.00E+00	1.20E–03	1.60E–05	2.70E–04
Eating Fish					
Adult	2.00E–02	0.00E+00	8.40E–03	1.00E–03	3.90E–02
Teen	1.60E–02	0.00E+00	6.40E–03	7.90E–04	3.00E–02
Child	6.70E–03	0.00E+00	2.70E–03	3.40E–04	1.30E–02
Swimming					
Adult	9.30E–07	1.10E–06	0.00E+00	0.00E+00	0.00E+00
Teen	5.20E–06	6.40E–06	0.00E+00	0.00E+00	0.00E+00
Child	1.10E–06	1.30E–06	0.00E+00	0.00E+00	0.00E+00
Boating					
Adult	2.00E–06	0.00E+00	0.00E+00	0.00E+00	0.00E+00
Teen	2.00E–06	0.00E+00	0.00E+00	0.00E+00	0.00E+00
Child	1.00E–06	0.00E+00	0.00E+00	0.00E+00	0.00E+00

Table 12.2-23 Liquid Pathway Dose Analysis (Assuming 5678 L/min Flow and a Dilution Factor of 10) (Continued)

	Doses mSv/yr				
Pathway	**T Body**	**Skin**	**GI-LLI**	**Thyroid**	**Bone**
Sunbathing					
Adult	8.3E–05	9.7E–05	0.0E+00	0.0E+00	0.0E+00
Teen	4.6E–04	5.4E–04	0.0E+00	0.0E+00	0.0E+00
Child	9.6E–05	1.1E–04	0.0E+00	0.0E+00	0.0E+00
Total					
Adult	2.4E–02	9.8E–05	1.8E–02	5.6E–03	5.5E–02
Teen	1.9E–02	5.5E–04	1.4E–02	4.0E–03	4.2E–02
Child	9.0E–03	1.1E–04	6.9E–03	3.4E–03	1.8E–02
Infant	1.1E–03	0.0E+00	1.1E–03	1.9E–03	1.7E–04

Table 12.2-24 Activity Levels of the Transversing In-Core Probe System

	Decay Time (day)	Gy/h @ 1 Meter	Major Isotopes
Gamma Probe			
Sensor	0.00139	0.0561	Mn-56, Al-28, Ti-51
	0.0417	0.032	Mn-56, Na-24, Ni-65
	1.0	0.000133	Mn-56, Na-24, Cu-64
	2.0	0.0000384	Na-24, Co-60, Cr-51
Cable	0.00139	0.535	Mn-56, Mg-27, Ni-65
	0.0417	0.412	Mn-56, Ni-65, Fe-59
	1.0	0.00104	Mn-56, Fe-59, Mn-54
	2.0	0.00018	Fe-59, Mn-54, Cr-51
Neutron Probe			
Sensor	0.00139	0.03382	Mn-56, Al-28, Ti-51
	0.0417	0.02142	Mn-56, Na-24, Ni-65
	2.0	0.0000378	Co-60, Na-24, Co-58
Cable	0.00139	0.451	Mn-56, Mg-27, Ni-65
	0.0417	0.348	Mn-56, Ni-65, Fe-59
	1.0	0.00091	Mn-56, Fe-59, Mn-54
	2.0	0.000189	Fe-59, Mn-54, Co-60

Table 12.2-25 Activity Levels in the Reactor Internal Pump

Component	Level
Impeller	0.04 - 0.24 Gy/h
Upper Motor	4 -12 mGy/h
Motor	0.8 - 3 mGy/h
Lower motor casing	0.7 - 5 mGy/h

Table 12.2-26 Activity in the Turbine Moisture Separator/Reheater

Isotopes	MB/q	Isotopes	MB/q
KR-83M	6.3E+01	NA-24	1.0E+02
KR-85M	1.1E+02	P-32	1.9E+00
KR-85	4.4E–01	CR-51	5.9E+01
KR-87	3.6E+02	MN-54	6.7E–01
KR-88	3.6E+02	MN-56	5.2E+02
KR-89	2.3E+03	FE-55	9.6E+00
KR-90	5.2E+03	FE-59	2.9E–01
KR-91	5.9E+03	CO-58	1.9E+00
XE-131M	3.7E–01	CO-60	3.7E+00
XE-133M	5.2E+00	NI-63	9.6E–03
XE-133	1.6E+02	CU-64	2.9E+02
XE-135M	4.8E+02	ZN-65	1.9E+00
XE-135	4.1E+02	SR-89	9.6E–01
XE-137	2.8E+03	SR-90	6.7E–02
XE-138	1.7E+03	Y-90	6.7E–02
XE-139	5.2E+03	SR-91	4.1E+01
XE-140	5.6E+03	SR-92	1.1E+02
XE-144	1.0E+01	Y-91	3.7E–01
Total	**3.1E+04**	Y-92	6.3E+01
		Y-93	4.1E+01
I-131	7.0E+02	ZR-95	7.8E–02
I-132	6.3E+03	NB-95	7.8E–02
I-133	4.8E+03	MO-99	1.9E+01
I-134	1.0E+04	TC-99M	1.9E+01
I-135	6.7E+03	RU-103	1.9E–01
		RH-103M	1.9E–01
		RU-106	2.9E–02
Total	**2.9E+04**		**1.3E+03**

Table 12.2-26 Activity in the Turbine Moisture Separator/Reheater (Continued)

Isotopes	MB/q	Isotopes	MB/q
RB-89	6.3E+01	RH-106	2.9E–02
CS-134	2.6E–01	AG-110M	9.6E–03
CS-136	1.7E–01	TE-129M	3.7E–01
CS-137	7.0E–01	TE-131M	9.6E–01
CS-138	1.2E+02	TE-132	9.6E–02
Total	**1.8E+02**	BA-140	3.7E+00
		LA-140	3.7E+00
N-16	1.4E+08	CE-141	2.9E–01
		CE-144	2.9E–02
H-3	2.9E+04	PR-144	2.9E–02
		W-187	2.9E+00
		NP-239	7.8E+01
		Total	**1.4E+03**

Table 12.2-27 Activity in the Turbine Condenser

Isotopes	MBq	Isotopes	MBq
KR-83M	9.6E+03	NA-24	1.4E+02
KR-85M	1.7E+04	P-32	2.8E+00
KR-85	6.7E+01	CR-51	8.5E+01
KR-87	5.6E+04	MN-54	1.0E+00
KR-88	5.6E+04	MN-56	7.8E+02
KR-89	2.9E+05	FE-55	1.4E+01
KR-90	2.9E+05	FE-59	4.1E+01
KR-91	8.5E+04	CO-58	2.8E+00
XE-131M	5.6E+01	CO-60	5.6E+00
XE-133M	8.1E+02	NI-63	1.4E–02
XE-133	2.4E+04	CU-64	4.4E+02
XE-135M	7.0E+04	ZN-65	2.8E+00
XE-135	6.3E+04	SR-89	1.4E+00
XE-137	3.6E+05	SR-90	1.0E–01
XE-138	2.4E+05	Y-90	1.0E–01
XE-139	3.4E+05	SR-91	5.9E+01
XE-140	1.3E+05	SR-92	1.6E+02
XE-144	1.4E+02	Y-91	5.6E–01
Total	**2.0E+06**	Y-92	9.3E+01
		Y-93	5.9E+01
I-131	1.0E+03	ZR-95	1.1E–01
I-132	8.9E+03	NB-95	1.1E–01
I-133	7.0E+03	MO-99	2.8E+01
I-134	1.5E+04	TC-99M	2.8E+01
I-135	1.0E+04	RU-103	2.8E–01
Total	**4.2E+04**	RH-103M	2.8E–01
		RU-106	4.1E–02

Table 12.2-27 Activity in the Turbine Condenser (Continued)

Isotopes	MBq	Isotopes	MBq
RB-89	8.5E+01	RH-106	4.1E–02
CS-134	3.7E–01	AG-110M	1.4E–02
CS-136	2.6E–01	TE-129M	5.6E–01
CS-137	1.0E+00	TE-131M	1.4E+00
CS-138	1.7E+02	TE-132	1.4E–01
Total	**2.6E+2**	BA-140	5.6E+00
		LA-140	5.6E+00
N-16	1.4E+07	CE-141	4.1E–01
		CE-144	4.1E–02
H-3	4.4E+04	PR-144	4.1E–02
		W-187	4.4E+00
		NP-239	1.1E+02
		Total	**2.0E+03***

* Includes isotopes from previous page (right hand side)

Table 12.2-28 Activity in the Condenser Demineralizer

Isotopes	Demineralizer MBq	Filter MBq	Isotopes	Demineralizer MBq	Filter MBq
I-129	7.0E–04		SR-92	5.2E+03	
I-131	2.4E+06		Y-91	7.4E+03	1.1E+04
I-132	2.5E+05		Y-91M	4.1E+03	
I-133	1.8E+06		Y-92	5.2E+03	7.4E+03
I-134	1.6E+05		Y-93	5.6E+01	1.4E+04
I-135	8.1E+05		ZR-93	1.2E–04	
Total	**5.4E+06**		ZR-95	3.2E+01	4.4E+03
			NB-95M	1.3E–01	1.8E+01
RB-89	2.7E+02		NB-95	2.4E+01	3.2E+03
CS-134	5.6E+04		MO-99	4.4E+04	
CS-135	7.4E–01		TC-99M	2.3E+04	
CS-136	7.4E+02		TC-99	2.4E–01	
CS-137	2.2E+05		RU-103	2.5E+01	4.8E+03
CS-138	1.1E+03		RH-103M	2.5E+01	4.8E+03
Total	**2.8E+05**		RU-106	3.0E+01	1.3E+03
			RH-106	3.0E+01	1.3E+03
NA-24	2.7E+04		AG-110M	7.4E+00	4.1E+02
P-32	1.2E+04		AG-110	1.0E–01	5.6E+00
CR-51	7.0E+05		TE-129M	1.1E+04	
MN-54	4.1E+04	1.5E+04	TE-129	3.5E+03	
MN-56	1.2E+04	2.2E+04	TE-131M	1.0E+03	
FE-55	1.6E+04	4.4E+05	TE-131	1.1E+02	
FE-59	4.4E+01	7.8E+03	TE-132	1.4E+02	
CO-58	3.0E+04	3.2E+04	BA-137M	2.1E+05	
CO-60	5.2E+05	9.3E+04	BA-140	2.1E+04	

Table 12.2-28 Activity in the Condenser Demineralizer (Continued)

Isotopes	Demineralizer MBq	Filter MBq	Isotopes	Demineralizer MBq	Filter MBq
NI-63	1.6E+03	2.4E+02	LA-140	2.1E+04	3.7E+04
CU-64	6.7E+04		CE-141	3.0E+01	6.3E+03
ZN-65	2.0E+05		CE-144	4.8E+01	2.6E+03
SR-89	2.2E+04		PR-144M	3.6E–01	1.9E+01
SR-90	2.1E+04		PR-144	4.8E+01	2.6E+03
Y-90	2.1E+04		W-187	9.6E+00	2.3E+03
SR-91	1.4E+04		NP-239	8.1E+04	
			PU-239	6.7E+00	
Total	**3.3E+05**		**Total**	**1.4E+07**	**7.2E+05**

Table 12.2-29 Steam Jet Air Ejector Inventory

Isotope	1st Stage Ejector (MBq)	Condenser (MBq)	2nd Stage Ejector (MBq)
Kr-83m	2.5E+01	7.4E+02	7.4E+01
Kr-85m	4.4E+01	1.4E+03	1.4E+02
Kr-85	1.5E–01	4.4E+00	4.4E–01
Kr-87	1.5E+02	4.4E+03	4.4E+02
Kr-88	1.5E+02	4.4E+03	4.4E+02
Kr-89	9.3E+02	2.8E+04	2.8E+03
Kr-90	1.7E+03	5.2E+04	5.2E+03
Kr-91	1.1E+03	3.3E+04	3.3E+03
Kr-92	5.6E+01	1.7E+03	1.7E+02
Kr-93	2.9E+00	8.9E+01	8.9E+00
Kr-94	7.8E–13	2.4E–11	2.4E–12
Kr-95	1.5E–05	4.4E–04	4.4E–05
Kr-97	5.6E–21	1.7E–19	1.7E–20
Total KR	**4.1E+03**	**1.3E+05**	**1.3E+04**
Xe-131m	1.1E–01	3.3E+00	3.3E–01
Xe-133m	2.1E+00	6.3E+01	6.3E+00
Xe-133	5.9E+01	1.8E+03	1.8E+02
Xe-135m	1.9E+02	5.6E+03	5.6E+02
Xe-135	1.6E+02	4.8E+03	4.8E+02
Xe-137	1.1E+03	3.2E+04	3.2E+03
Xe-138	6.7E+02	2.0E+04	2.0E+03
Xe-139	1.7E+03	5.2E+04	5.2E+03

Table 12.2-29 Steam Jet Air Ejector Inventory (Continued)

Isotope	1st Stage Ejector (MBq)	Condenser (MBq)	2nd Stage Ejector (MBq)
Xe-140	1.3E+03	4.1E+04	4.1E+03
Xe-141	3.1E+01	9.6E+02	9.6E+01
Xe-142	1.9E+00	5.6E+01	5.6E+00
Xe-143	8.1E–09	2.5E–07	2.5E–08
Xe-144	4.1E–03	1.2E–01	1.2E–02
Total XE	**5.3E+03**	**1.6E+05**	**9.4E+03**
Noble Gas Totals	**4.1E+03**	**2.8E+05**	**2.8E+04**
N-16*	1.3E+04	4.8E+05	4.8E+04

* Value given is estimated N-16 inventory at 100% power. Value varies in an unknown fashion with power. Based upon operating measurements, the value for N-16 at 20% power is close to zero. Multiply value by a factor of 6 for use with hydrogen water chemistry.

Table 12.2-30 Standby Gas Treatment System Inventory

Isotope	MBq	Isotope	MBq
I-131	5.6E+02	Y-91	3.1E+01
I-132	5.6E+01	Y-92	1.3E+01
I-133	4.1E+02	Y-93	2.5E+01
I-134	3.7E+01	Zr-95	7.0E+00
I-135	18E+02	Nb-95	3.7E+00
		Mo-99	7.4E+01
		Tc-99m	7.0E+00
Na-24	6.3E+02	Ru-103	1.1E+01
P-32	2.7E+02	Rh-103m	1.1E+01
Cr-51	1.6E+04	Ru-106	1.5E+01
Mn-54	2.0E+03	Rh-106	1.5E+01
Mn-56	5.6E+02	Ag-110m	4.1E–06
Fe-55	6.7E+04	Te-129m	1.8E+01
Fe-59	1.3E+02	Te-131m	1.7E+00
Co-58	1.4E+03	Te-132	4.4E–01
Co-60	3.6E+04	Cs-134	2.3E+02
Ni-63	1.7E+01	Cs-136	3.2E+00
Cu-64	2.2E+02	Cs-137	1.2E+03
Zn-65	6.7E+02	Cs-138	3.7E+00
Rb-89	9.3E–01	Ba-140	7.0E+01
Sr-89	7.0E+01	La-140	7.0E+01
Sr-90	1.2E+02	Ce-141	1.3E+01
Y-90	1.2E+02	Ce-144	1.1E+01
Sr-91	2.3E+01	Pr-144	1.1E+01
Sr-92	1.7E+01	W-187	4.1E+00
		Np-239	2.6E+02
Totals	**1.3E+05**		**3.8E+01**
Total			**1.3E+05**

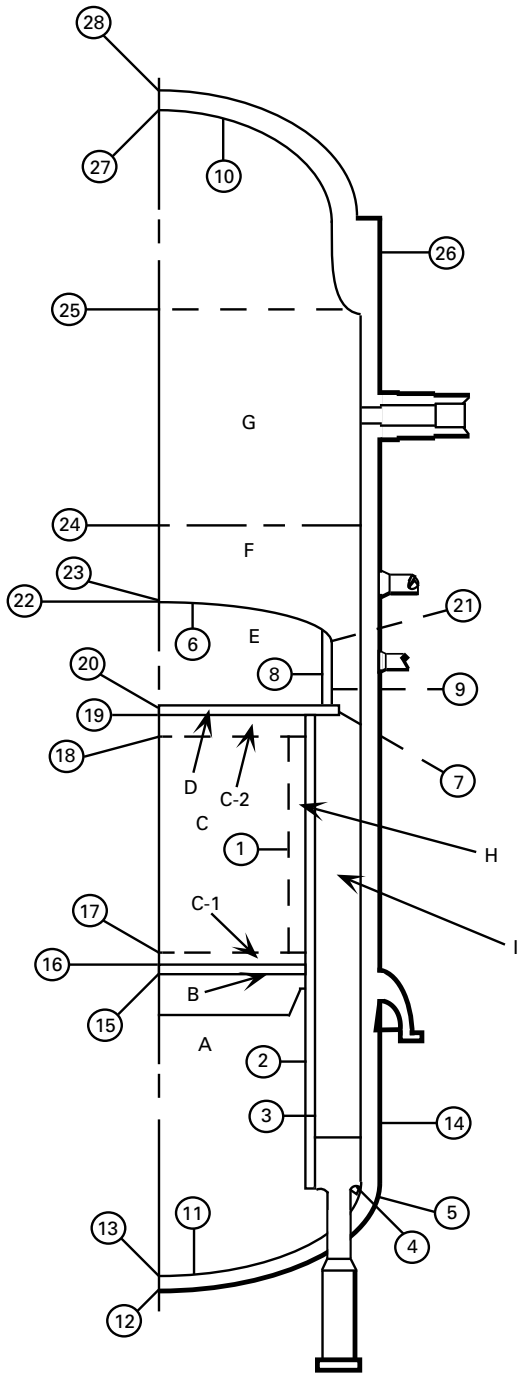

Figure 12.2-1 Radiation Source Model

12.3 Radiation Protection Design Features

12.3.1 Facility Design Features

The ABWR Standard Plant is designed to meet the intent of Regulatory Guide 8.8 (i.e., to keep radiation exposures to plant personnel as low as reasonably achievable (ALARA)). This section describes the component and system designs, in addition to the equipment layout, employed to maintain radiation exposures ALARA. Where possible, consideration of individual systems is provided to illustrate the application of these principles. Owing to the ABWR being a standard plant, specific details as to precise equipment definition are not available and are to be provided by the COL applicant during the final design detail stage. To insure that the plant as designed meets all applicable radiation criteria, a two-step process is then applied where design details not included in this document are then subject to review and confirmation in accordance with radiation protection criteria. Therefore, the details in this section serve as input to the final design configuration and serve to determine the adequacy of the design with respect to radiation protection.

Material application for primary coolant piping, tubing, vessel internal surfaces, and other components in contact with the primary coolant is discussed in the following pages. Typical nickel and cobalt contents of the principal materials applied are given in Table 12.3-2.

Carbon steel is used in a large portion of the system piping and equipment outside of the Nuclear Steam Supply System. Carbon steel is typically low in nickel content and contains a very small amount of cobalt impurity.

Stainless steel is used in portions of the system such as the reactor internal components and heat exchanger tubes where high corrosion resistance is required. The nickel content of the stainless steel is in the 9 to 10.5% range and is controlled in accordance with applicable ASME material specifications. Cobalt content is controlled to less than 0.05% in the XM-19 alloy used in the control rod drives.

A previous review of materials certifications indicated an average cobalt content of only 0.15% in austenitic stainless steel.

Ni-Cr-Fe alloys such as Inconel 600 and Inconel X750, which have high nickel content, are used in some reactor vessel internal components. These materials are used in applications for which there are special requirements to be satisfied (such as possessing specific thermal expansion characteristics along with adequate corrosion resistance) and for which no suitable alternative low-nickel material is available. Cobalt content in the Inconel X750 used in the fuel assemblies is limited to 0.05%.

Stellite is used for hard facing of components which must be extremely wear resistant. Use of high cobalt alloys such as Stellite is restricted to those applications where no satisfactory

alternative material is available. An alternative material (Colmonoy) has been used for some hard facings in the core area.

12.3.1.1 Equipment Design and Material Selection for Maintaining Exposure ALARA

12.3.1.1.1 Equipment Design

This subsection describes specific components, as well as system design features, that aid in maintaining the exposure of plant personnel during system operation and maintenance ALARA. Equipment layout to provide ALARA exposures of plant personnel is discussed in Subsection 12.3.1.2.

(1) Pumps

Pumps located in radiation areas are designed to minimize the time required for maintenance. Quick change cartridge-type seals on pumps, and pumps with back pullout features that permit removal of the pump impeller or mechanical seals without disassembly of attached piping, are employed to minimize exposure time during pump maintenance. The configuration of piping about pumps is designed to provide sufficient space for efficient pump maintenance. Provisions are made for flushing and in certain cases chemically cleaning pumps prior to maintenance. Pump casing drains provide a means for draining pumps to the sumps prior to disassembly, thus reducing the exposure of personnel and decreasing the potential for contamination. Where two or more pumps conveying highly radioactive fluids are required for operational reasons to be located adjacent to each other, shielding is provided between the pumps to maintain exposure levels ALARA. An example of this situation is the CUW circulation pumps. Pumps adjacent to other highly radioactive equipment are also shielded to reduce the maintenance exposure, for example, in the Radwaste System.

Whenever possible, operation of the pumps and associated valving for radioactive systems is accomplished remotely. Pump control instrumentation is located outside high radiation areas, and motor or pneumatic-operated valves and valve extension stems are employed to allow operation from outside these areas.

(2) Instrumentation

Instruments are located in low radiation areas such as shielded valve galleries, corridors, or control rooms, whenever possible. Shielded valve galleries provided for this purpose include those for the CUW, FPC, and Radwaste (cleanup phase separator, spent resin tank, and waste evaporator) Systems. Instruments required to be located in high radiation areas due to operational requirements are designed such that removal of these instruments to low radiation areas for maintenance is possible. Sensing lines are routed from taps on the primary system in order to avoid placing the transmitters or readout devices in high radiation areas. For example, reactor water

level and recirculation system pressure sensing instruments are located outside the drywell.

Liquid service equipment for systems containing radioactive fluids are provided with vent and backflush provisions. Instrument lines, except those for the reactor vessel, are designed with provisions for backflushing and maintaining a clean fill in the sensing lines. The reactor vessel sensing lines may be flushed with condensate following reactor blowdown.

(3) Heat Exchangers

Heat exchangers are constructed of stainless steel or Cu/Ni tubes to minimize the possibility of failure and reduce maintenance requirements. The heat exchanger design allows for the complete drainage of fluids from the exchanger, avoiding pooling effects that could lead to radioactive crud deposition. Connections are available for condensate or demineralized water flushing of the heat exchangers. For the Reactor Water Cleanup (CUW) System, separate connections are provided to chemically decontaminate both the heat exchangers (both regenerative and non-regenerative) and the pumps. The other main heat exchangers (RHR and RIP) are provided connections by which the exchangers can be flushed with clean water. The last main heat exchanger (the fuel pool heat exchanger) is downstream of the filter/demineralizer and is therefore not subjected to flows containing significant amounts of fission or activation products. In all cases, the pumps directly involved with the heat exchangers are also inline for decontamination with the exchangers. Instrumentation and valves are remotely operable to the maximum extent possible in the shielded heat exchanger cubicles, to reduce the need for entering these high radiation areas.

(4) Valves

Valve packing and gasket material are selected on a conservative basis, accounting for environmental conditions such as temperature, pressure, and radiation tolerance requirements to provide a long operating life. Valves have back seats to minimize the leakage through the packing. Straight-through valve configurations were selected where practical, over those which exhibit flow discontinuities or internal crevices to minimize crud trapping. Teflon gaskets are not used.

Wherever possible, valves in systems containing radioactive fluids are separated from those for “clean” services to reduce the radiation exposure from adjacent valves and piping during maintenance.

Pneumatically or mechanically-operated valves are employed in high radiation areas, whenever practical, to minimize the need for entering these areas. For certain situations, manually-operated valves are required and, in such cases, extension valve

stems are provided which are operated from a shielded area. Flushing and drain provisions are employed in radioactive systems to reduce exposure to personnel during maintenance.

For areas in which especially high radiation levels are encountered, valving is reduced to the maximum extent possible with the bulk of the valve and piping located in an adjacent valve gallery where the radiation levels are lower.

(5) Piping

Piping was selected to provide a service life equivalent to the design life of the plant, with consideration given to corrosion allowances and environmental conditions. Piping for service in radioactive systems such as the CUW System have butt-welded connections, rather than socket welds, to reduce crud traps. Distinction is made between piping conveying radioactive and non-radioactive fluids, and separate routing is provided whenever possible. Piping conveying highly radioactive fluids is usually routed through shielded pipe chases and shielded cubicles. However, when these options are not feasible, the radioactive piping is embedded in concrete walls and floors.

(6) Lighting

Lighting is designed to provide sufficient illumination in radiation areas to allow quick and efficient surveillance and maintenance operations. To reduce the need for immediate replacement of defective bulbs, multiple lighting fixtures are provided in shielded cubicles. Consideration is also given to locating lighting fixtures in easily accessible locations, thus reducing the exposure time for bulb replacement.

(7) Floor Drains

Floor drains with appropriately sloped floors are provided in shielded cubicles where the potential for spills exist. Those drain lines having a potential for containing highly radioactive fluids are routed through pipe chases, shielded cubicles, or are embedded in concrete walls and floors. Smooth epoxy-type coatings are employed to facilitate decontamination when a spill does occur.

(8) SGTS Filters

The SGTS filter is located in a separate shielded cubicle and is separated by a shield wall from the exhaust fans to reduce the radiation exposure of personnel during maintenance. The dampers located in the cubicles are remotely-operated, thus requiring no access to the cubicle during operation. A pneumatic transfer system is employed to remove the radioactive charcoal from the filter, requiring entry into the shielded cubicle only during the connection of the hoses to the SGTS filter unit.

12.3.1.1.2 Material Selection

In the ABWR design maintaining radiation exposure ALARA has been considered in the material selection of systems and components exposed to reactor coolant. For example, radiation exposure potential has been reduced appreciably through the removal or reduction of cobalt from many components as compared to current BWR fleet. Much of the cobalt is removed from contact with reactor coolant by eliminating Stellite where practical and reducing cobalt in the core stainless steel components. The cost of using very low cobalt materials through out the plant is prohibitive with the cost of 0.02 wt percent cobalt stainless steel approximately 8 times that of 0.05 wt percent stainless steel. Therefore, the ABWR design has taken a graded approach by using the most expensive though lowest cobalt bearing materials in the most radiologically significant areas with increasing cobalt content in less sensitive areas. The ABWR standards for cobalt are: 0.02 wt percent for those items in the core; 0.03 wt percent for those items in the vessel internals; and 0.05 wt percent for all other components. Also, with the current materials, there are no proven substitutes for Stellite for many hard surface applications shuch as MSIV seats. Current efforts by the nuclear and metallurgical industry indicate that in the future, practical alternatives to Stellite maybe feasible and are being researched.

The COL applicant shall address material selection of systems and components exposed to reactor coolant to maintain radiation exposures ALARA. See Subsection 12.3.7.4 for COL license information requirements.

12.3.1.2 Plant Design for Maintaining Exposure (ALARA)

This subsection describes features of equipment layout and design which are employed to maintain personnel exposures ALARA.

(1) Penetrations

Penetrations through shield walls are avoided whenever possible to reduce the number of streaming paths provided by these penetrations. Whenever penetrations are required through shield walls, however, they are located to minimize the impact on surrounding areas. Penetrations are located so that the radiation source cannot “see” through the penetration. When this is not possible, or to provide an added order of reduction, penetrations are located to exit far above floor level in open corridors or in other relatively inaccessible areas. Penetrations which are offset through a shield wall are frequently employed for electrical penetrations to reduce the streaming of radiation through these penetrations.

Where permitted, the annular region between pipe and penetration sleeves, as well as electrical penetrations, are filled with shielding material to reduce the streaming area presented by these penetrations. The shielding materials used in these applications include a lead-loaded silicone foam, with a density comparable to concrete, and a boron-loaded refractory-type material for applications requiring neutron as well as

gamma shielding. There are certain penetrations where these two approaches are not feasible or are not sufficiently effective. In those cases, a shielded enclosure around the penetration as it exits in the shield wall, with a 90 degree bend of the process pipe as it exits the penetration, is employed.

(2) Sample Stations

Sample stations in the plant provide for the routine surveillance of reactor water quality. These sample stations are located in low radiation areas to reduce the exposure to operating personnel. Flushing provisions are included using demineralized water, and pipe drains to plant sumps are provided to minimize the possibility of spills. Fume hoods are employed for airborne contamination control. Both working areas and fume hoods are constructed of polished stainless steel to ease decontamination if a spill does occur. Grab spouts are located above the sink to reduce the possibility of contaminating surrounding areas during the sampling process.

(3) HVAC Systems

Major HVAC equipment (blowers, coolers, and the like) is located in dedicated low radiation areas to maintain exposures to personnel maintaining these equipment ALARA. HVAC ducting is routed outside pipe chases and does not penetrate pipe chase walls, which could compromise the shielding. HVAC ducting penetrations through walls of shielded cubicles are located to minimize the impact of the streaming radiation levels in adjoining areas. Additional HVAC design considerations are addressed in Subsection 12.3.3.

(4) Piping

Piping containing radioactive fluids is routed through shielded pipe chases, shielded equipment cubicles, or embedded in concrete walls and floors, whenever possible. “Clean” services such as compressed air and demineralized water are not routed through shielded pipe chases.

For situations in which radioactive piping must be routed through corridors or other low radiation areas, an analysis is conducted to ensure that this routing does not compromise the existing radiation zoning.

Radioactive services are routed separately from piping containing nonradioactive fluids, whenever possible, to minimize the exposure to personnel during maintenance. When such routing combinations are required, however, drain provisions are provided to remove the radioactive fluid contained in equipment and piping. In such situations, provisions are made for the valves required for process operation to be controlled remotely, without need for entering the cubicle.

Penetrations for piping through shield walls are designed to minimize the impact on surrounding areas. Approaches used to accomplish this objective are described in Subsection 12.3.1.2(1).

Piping configurations are designed to minimize the number of “dead legs” and low points in piping runs to avoid accumulation of radioactive crud and fluids in the line. Drains and flushing provisions are employed whenever feasible to reduce the impact of required “dead legs” and low points. Systems containing radioactive fluids are welded to the most practical extent to reduce leakage through flanged or screwed connections. For highly radioactive systems, butt welds are employed to minimize crud traps. Provisions are also made in radioactive systems for flushing with condensate or chemically cleaning the piping to reduce crud buildup.

(5) Equipment Layout

Equipment layout is designed to reduce the exposure of personnel required to inspect or maintain equipment. “Clean” pieces of equipment are located separately from those which are sources of radiation whenever possible. For systems that have components that are major sources of radiation, piping and pumps are located in separate cubicles to reduce exposure from these components during maintenance. These major radiation sources are also separately shielded from each other.

(6) Contamination Control

Contaminated piping systems are welded to the most practical extent to minimize leaks through screwed or flanged fittings. For systems containing highly radioactive fluids, drains are hard piped directly to equipment drain sumps, rather than to allow contaminated fluid to flow across the floor to a floor drain. Certain valves in the main steamline are also provided with leakage drains piped to equipment drain sumps to reduce contamination of the steam tunnel. Pump casing drains are employed on radioactive systems whenever possible to remove fluids from the pump prior to disassembly. In addition, provisions for flushing with condensate, and in especially contaminated systems, for chemically cleaning the equipment prior to maintenance, are provided.

The HVAC System is designed to limit the extent of airborne contamination by providing air flow patterns from areas of low contamination to more contaminated areas. Penetrations through outer walls of the building containing radiation sources are sealed to prevent miscellaneous leaks into the environment. The equipment drain sump vents are fitted with charcoal canisters or piped directly to the radwaste HVAC System to remove airborne contaminants evolved from discharges to the sump. Wet transfer of both the steam dryer and separator also reduces the likelihood of contaminants on this equipment being released into the plant atmosphere. In areas where the reduction of airborne contaminants cannot be eliminated efficiently by

HVAC Systems, breathing air provisions are provided (e.g., for CRD removal under the reactor pressure vessel and in the CRD maintenance room).

Appropriately sloped floor drains are provided in shielded cubicles and other areas where the potential for a spill exists to limit the extent of contamination. Curbs are also provided to limit contamination and simplify washdown operations. A cask decontamination vault is located in the Reactor Building where the spent fuel cask and other equipment may be cleaned. The CRD maintenance room is used for disassembling control rod drives to reduce the contamination potential.

Consideration is given in the design of the plant for reducing the effort required for decontamination. Epoxy-type wall and floor coverings have been selected which provide smooth surfaces to ease decontamination surfaces. Expanded metal-type floor gratings are minimized in favor of smooth surfaces in areas where radioactive spills could occur. Equipment and floor drain sumps are stainless steel lined to reduce crud buildup and to provide surfaces easily decontaminated.

12.3.1.3 Radiation Zoning

Radiation zones are established in all areas of the plant as a function of both the access requirements of that area and the radiation sources in that area. Operating activities, inspection requirements of equipment, maintenance activities, and abnormal operating conditions are considered in determining the appropriate zoning for a given area. The relationship between radiation zone designations and accessibility requirements is presented in the following tabulation:

Zone Designation	Dose Rate (µGy/h)	Access Description
A	≤ 6	Uncontrolled, unlimited access
B	< 10	Controlled, unlimited access
C	< 50	Controlled, limited access, 20 h/wk
D	< 250	Controlled, limited access, 4 h/wk
E	< 1.0E+03	Controlled, limited access, 1 h/wk
F	≥ 1.0E+03	Controlled infrequent access. Authorization required.

The dose rate applicable for a particular zone is based on operating experience and represents design dose rates in a particular zone, and should not be interpreted as the expected dose rates which would apply in all portions of that zone, or for all types of work within that zone, or at all periods of entry into the zone. Large BWR plants have been in operation for three decades, and operating experience with similar design basis numbers shows that only a small fraction of the 10CFR20 maximum permissible dose is received in such zones from radiation sources controlled by equipment layout or the structural shielding provided. Therefore, on a practical basis, a radiation zoning approach as described above accomplishes the as low as reasonably achievable objectives for doses as required by 10CFR20.1(c). The radiation zone maps for this plant with zone designations as described in the preceding tabulations are contained in Figures 12.3-1 through 12.3-3, 12.3-5 through 12.3-11, and 12.3-37 through 12.3-53.

Access to areas in the plant is controlled and regulated by the zoning of a given area. Areas with dose rates such that an individual would receive a dose in excess of 1 mGy in a period of one hour are locked and posted with “High Radiation Area” signs. Entry to these areas is on a controlled basis. Areas in which an individual would receive a dose in excess of 50 μGy up to 1 mGy within a period of one hour are posted with signs indicating that this is a radiation area and include, in certain cases, barriers such as ropes or doors.

12.3.1.4 Implementation of ALARA

In this subsection, the implementation of design considerations to radioactive systems for maintaining personnel radiation exposures ALARA is described for the following five systems:

(1) Reactor Water Cleanup System

(2) Residual Heat Removal System (shutdown cooling mode)

(3) Fuel Pool Cooling and Cleanup System

(4) Main Steam

(5) Standby Gas Treatment System

12.3.1.4.1 Reactor Water Cleanup (CUW) System

The CUW System is designed to operate continuously to reduce reactor water radioactive contamination. Components for this system are located outside the containment and include filter/demineralizers, a backwash receiving tank, regenerative and non-regenerative heat exchangers, pumps, and associated valves.

The highest radiation level components include the filter/demineralizers, heat exchangers, and backwash receiving tank. The filter/demineralizers are located in separate concrete-shielded cubicles which are accessible through shielded hatches. Valves and piping within the cubicles are reduced to the extent that entry into the cubicles is not required during any operational

phase. Most of the valves and piping are located in a shielded valve gallery adjacent to the filter/demineralizer cubicles. The valves are remotely operable to the greatest practical extent to minimize entry requirements into this area. The CUW heat exchangers are also located in a shielded cubicle with valves operated remotely by use of extension valve stems, or from instrument panels located outside the cubicle. The backwash tank is shielded separately from the resin transfer pump, permitting maintenance of the pump without being exposed to the spent resins contained in the backwash tank. The pump valves are operated remotely from outside the cubicle.

The CUW System is provided with chemical cleaning connections which can utilize the condensate system to flush piping and equipment prior to maintenance. The CUW filter/demineralizers can be remotely backflushed to remove spent resins and filter aid material. If additional decontamination is required, chemical addition connections are provided in the piping to clean piping as well as equipment prior to maintenance. The backwash tank employs an arrangement to agitate resins prior to discharge. The tank vent is fitted with a charcoal filter canister to reduce emission of radioiodines into the plant atmosphere. The HVAC System is designed to limit the spread of contaminants from these shielded cubicles by maintaining a negative pressure in the cubicles relative to the surrounding areas.

Personnel access to the cubicles for maintenance of these components is on a controlled basis, whereby specific restrictions and controls are implemented to minimize personnel exposure.

12.3.1.4.2 Residual Heat Removal System (Shutdown Cooling Mode)

In the shutdown cooling (SC) mode, the RHR System is placed in operation to recirculate reactor coolant to remove reactor decay heat following the period of approximately 2 to 4 hours after shutdown. During power operation, the system is not in use except for flow testing to and from the suppression pool. Therefore, there is no reactor coolant flow through the RHR System and only traces of residual radioactive contamination may exist from prior operation.

System components are located in the Reactor Building and include three RHR pumps and three heat exchangers, which are actively used in the SC mode. The heat exchangers and associated pumps work independently of the other pump and heat exchangers and are located in separate concrete-shielded cubicles. The cubicles are accessible through labyrinths which reduce radiation levels outside the cubicle to acceptable levels. A knockout wall constructed of vertically and horizontally lapped concrete blocks is provided for pump removal. A concrete hatch is provided through the roof of the cubicle for heat exchanger removal. Highest radiation levels occur at the heat exchangers during the cooldown period (1/2 to 4 hours after shutdown). During all other operation and plant shutdown periods, the radiation level near these components is considerably decreased.

Access to the RHR pumps and heat exchangers for any inspection or maintenance is permitted on a controlled basis. System maintenance is performed during periods of system shutdown when no reactor coolant is being circulated through the system. Specific restrictions and

controls for personnel entry into the shielded cubicles are implemented to minimize personnel exposures. Inspection of the equipment in these cubicles can be conducted from platforming about the heat exchangers to simplify inspection of this equipment and consequently reduce the exposure during inspection.

The Reactor Building is not used exclusively for radioactive equipment or systems. However, all components of the system, as described, are contained within shielded cubicles. This shielding is sufficient to reduce the radiation level during the shutdown mode of operation to less than 50 μGy/h in adjacent areas where clean components, materials, or equipment are located.

System control panels and instrumentation are located in the main control room. This precludes exposure to the control operator during operation of the system for plant cooldown.

12.3.1.4.3 Fuel Pool Cooling and Cleanup (FPC) System

The FPC System is designed to operate continuously to handle the spent fuel cooling load and to reduce pool water radioactive contamination.

The FPC System components are located in the Reactor Building. Included are two filter/demineralizer units which serve to remove radioactive contamination from the fuel pool and suppression water. These units are the highest radiation level components in the system. Each unit is located in a concrete-shielded cubicle which is accessible through a shielded hatch. Provisions are made for remotely backflushing the units when filter and resin material are spent. This removal of radioactively contaminated material reduces the component radiation level considerably and serves to minimize exposures during maintenance. All valves (inlet, outlet, recycle, vent, and drain) to the filter/demineralizers units are located outside the shielded cubicles in a separate shielded cubicle together with associated piping, headers, and instrumentation. The radiation level in this cubicle is sufficiently low to permit required maintenance to be performed. Piping potentially containing resin is continuously sloped downward to the backwash tank.

The backwash tank is shared with the CUW System (Section 12.3.1.4.1). The system also includes two low radiation level heat exchangers and two circulation pumps. The heat exchangers' design radiation levels are low enough to locate them in an open alcove area. The pumps are located in a low radiation area adjacent to the shielded backwash tank. System piping is routed so as not to compromise zoning requirements as established in the radiation zone maps.

All of the aforementioned shielded system components are consolidated in the same section of the Reactor Building. Personnel access to shielded system components is controlled to minimize personnel exposure. Shielding for the components is designed to reduce the radiation level to less than 10 μGy/h in adjacent areas where normal access is permitted. Controlled areas

where the new resin tank, filter aid tank, and pumps are located, are shielded to less than 50 μGy/h.

Operation of the system is accomplished from the Main Control Room and local control panels located where designed radiation levels are less than 10 μGy/h and normal personnel access is permitted.

12.3.1.4.4 Main Steam System

All radioactive materials in the Main Steam System, located in the main steam-feedwater pipe tunnel of the Reactor Building, result from radioactive sources carried over from the reactor during plant operation, including high energy short-lived N-16. During plant shutdown, residual radioactivity from prior plant operation is the radiation source.

Access to the main steam pipe tunnel in the Reactor Building is controlled. Entry into the Reactor Building steam tunnel is through a controlled personnel access door shielded by a concrete labyrinth to attenuate radiation streaming from the steam lines to adjoining areas. During reactor operation, the steam tunnel is not accessible except in the hot standby conditions under regulated access.

Leakage from selected valves on to surrounding areas is minimized by providing valve drains piped to equipment drain sumps. Floor drains are provided to minimize the spread of contamination should a leakage occur.

Penetrations through the steam tunnel walls are minimized to reduce the streaming paths made available by these penetrations. The blowout panels for the steam tunnel are located in the relatively inaccessible upper section of the RHR heat exchanger shielded cubicles which are controlled access areas. Penetrations through the steam tunnel walls, when they are required, are located so as to exit in controlled access areas or in areas that are not aligned with the steamlines. A lead-loaded silicone foam is employed whenever possible for these penetrations to reduce the available streaming area presented.

12.3.1.4.5 Standby Gas Treatment System

The Standby Gas Treatment System (SGTS) treats the Reactor Building ventilation air in the event of the release of radioactivity to this building. The system contains radioactivity only in the event of an emergency of abnormal condition. However, it is a potential source of concentrated radioactivity following such an occurrence.

The SGTS starts automatically on a high building ventilation radiation or LOCA signal and can also be manually started from the main control room. Operation of the system does not require entering the shielded filter cubicle.

The SGTS consists of two parallel treatment trains, each train being located in its own shielded room. In addition, the fans for each train are shielded from the filter, which is the dominant

source of radiation for the system. Each train includes high efficiency particulate filters and charcoal filters for removal of radioactivity prior to exhausting air to the outside environment.

All components are located in the Reactor Building, and personnel access to the shielded rooms for inspection or maintenance is on a controlled basis. A remote charcoal filter removal capability is provided to minimize exposures, which requires entry into the filter area only during the initial connection of the unit to the charcoal removal system. Sufficient space is provided around the filter unit to allow easy removal and bagging of the high efficiency filters.

The SGTS filter shielding is adequate to reduce the radiation level in fuel areas of the Reactor Building to less than 10 μGy/h following an isolation scram event with containment purge.

12.3.2 Shielding

12.3.2.1 Design Objectives

The primary objective of the radiation shielding is to protect operating personnel and the general public from radiation emanating from the reactor, the power conversion systems, the radwaste process systems, and the auxiliary systems, while maintaining appropriate access for operation and maintenance. The radiation shielding is also designed to keep radiation doses to equipment below levels at which disabling radiation damage occurs. Specifically, the shielding requirements in the plant are designed to perform the following functions:

(1) Limit the exposure of the general public, plant personnel, contractors, and visitors to levels that are ALARA and within 10CFR20 requirements

(2) Limit the radiation exposure of personnel, in the unlikely event of an accident, to levels that are ALARA and which conform to the limits specified in 10CFR50 Appendix A, Criterion 19 to ensure that the plant is maintained in a safe condition during an accident

(3) Limit the radiation exposure of critical components within specified radiation tolerances, to assure that component performance and design life are not impaired

12.3.2.2 Design Description

12.3.2.2.1 General Design Guides

In order to meet the design objectives, the following design guides are used in the shielding design of the ABWR:

(1) All systems containing radioactivity are identified and shielded based on access and exposure level requirements of surrounding areas. The radiation zone maps described in Subsection 12.3.1.3 indicate design radiation levels for which shielding for equipment contributing to the dose rate in the area is designed.

(2) The source terms used in the shielding calculations are analyzed with a conservative approach. Transient conditions as well as shut down and normal operating conditions are considered to ensure that a conservative source is used in the analysis.

Shielding design is based on fission product quantities in the coolant corresponding to the design basis offgas release, in addition to activation products. This is considered an anticipated operational occurrence, and hence represents conservatism in design. For components where N-16 is the major radiation source, a concentration based upon operating plant data is used.

(3) Effort is made to locate processing equipment in a manner which minimizes the shielding requirements. Shielded labyrinths are used to eliminate radiation streaming through access ways from sources located in cubicles.

(4) Penetrations through shield walls are located so as to minimize the impact on surrounding areas due to radiation streaming through the penetrations. The approaches used to locate and shield penetrations, when required, are discussed in Subsection 12.3.1.2 (1).

(5) Wherever possible, radioactive piping is run in a manner which will minimize radiation exposure to plant personnel. This involves:

(a) Minimizing radioactive pipe routing in corridors

(b) Avoiding the routing of high-activity pipes through low-radiation zones

(c) Use of shielded pipe trenches and pipe chases, where routing of high-activity pipes in low-level areas cannot be avoided, or if these are not available and the pipe routing permits, embedding the pipes in concrete walls and floor

(d) Separating radioactive and nonradioactive pipes for maintenance purposes

(6) To maintain acceptable levels at the valve stations, motor-operated or diaphragm valves are used where practical. For valve maintenance, provision is made for draining and flushing associated equipment so that radiation exposure is minimized. If manual valves are used, provision is made for shielding the operator from the valve by use of shield walls and valve stem extensions, where practicable.

(7) Shielding is provided to permit access and occupancy of the control room to ensure that plant personnel exposure following an accident does not exceed the guideline values set forth in 10CFR50 Appendix A, Criterion 19. The analyses of the doses to control room personnel for the design basis accidents are included in Chapter 15.

(8) The dose at the site boundary as a result of direct and scattered radiation from the turbine and associated equipment is considered.

(9) In selected situations, provisions are made for shielding major radiation sources during inservice inspection to reduce exposure to inspection personnel. For example, steel platforms are provided for ISI of the RPV nozzle welds and associated piping.

(10) The primary material used for shielding is concrete at a density of 2.3 g/cm^3. Concrete used for shielding purposes is designed in accordance with Regulatory Guide 1.69. Where special circumstances dictate, steel, lead, water, lead-loaded silicone foam, or a boron-laced refractory material is used.

(11) There is no field-routed piping in the ABWR design. Large and small piping, as well as instrument tubing, are routed by designers as indicated in the preceding paragraph (5).

12.3.2.2.2 Method of Shielding Design

The radiation shield wall thicknesses are determined using basic shielding data and proven shielding codes. A list of the computer programs used is contained in Table 12.3-1. The shielding design methods used also rely on basic radiation transport equations contained in Reference 12.3-1. The sources for basic shielding data, such as cross sections, buildup factors, and radioisotope decay information, are listed in References 12.3-2 through 12.3-10.

The shielding design is based on the plant operating at maximum design power with the release of fission products resulting in a source of 3.7 GBq/s of noble gas after a 30-minute decay period, and the corresponding activation and corrosion product concentrations in the reactor water listed in Section 11.1. Radiation sources in various pieces of plant equipment are cited in Section 12.2. Shutdown conditions, such as fuel transfer operation, as well as accident conditions, such as a LOCA or an FHA, have also been considered in designing shielding for the plant.

The mathematical models used to represent a radiation source and associate equipment and shielding are established to ensure conservative calculational results. Depending on the versatility of the applicable computer program, various degrees of complexity of the actual physical situation are incorporated. In general, cylindrically-shaped equipment such as tanks, heat exchangers, and demineralizers are mathematically modelled as truncated cylinders. Equipment internals are sectionally homogenized to incorporate density variations where applicable. For example, the tube bundle section of a heat exchanger exhibits a higher density than the tube bundle clearance circle, due to the tube density, and this variation is accounted for in the model. Complex piping runs are conservatively modelled as a series of point sources spaced along the piping run. Equipment containing sources in a parallel-piped configuration, such as fuel assemblies, fuel racks, and the SGTS charcoal filters, are modelled as parallel-piped with a suitable homogenization of materials contained in the equipment. The shielding for these sources is also modelled on a conservative basis, with discontinuities in the shielding, such as penetrations, doors, and partial walls accounted for. The dimension of the

floor decking is not considered in the shielding calculation as it is part of the effective shield thickness provided by the floor slab.

Pure gamma dose rate calculations, both scattered and direct, are conducted using point kernel codes (QADF/GGG). The source terms are divided into groups as a function of photon energy, and each group is treated independently of the others. Credit is taken for attenuation through all phases of material, and buildup is accounted for using a third-order polynomial buildup factor equation. The more conservative material buildup coefficients are selected for laminated shield configuration to ensure conservative results.

For combined gamma and neutron shielding situations, discrete ordinates (ANISN) techniques are applied.

The shielding thicknesses are selected to reduce the aggregate dose rate from significant radiation sources in surrounding areas to values below the upper limit of the radiation zone specified in the zone maps in Subsection 12.3.1.3. By maintaining dose rates in these areas at less than the upper limit values specified in the zone maps, sufficient access to the plant areas is allowed for maintenance and operational requirements.

Where shielded entries to high-radiation areas such as labyrinths are required, a gamma ray scattering code (GGG) is used to confirm the adequacy of the labyrinth design. The labyrinths are designed to reduce the scattered as well as the direct contribution to the aggregate dose rate outside the entry, such that the radiation zone designated for the area is not violated.

12.3.2.3 Plant Shielding Description

Figures 12.3-1 through 12.3-11 show the layout of equipment containing radioactive process materials. The general description of the shielding is described below:

(1) Drywell

The major shielding structures located in the drywell area consist of the reactor shield wall and the drywell wall. The reactor shield wall, in general, consists of 0.6m of concrete sandwiched between two 3.7 cm thick steel plates. The primary function served by the reactor shield wall is the reduction of radiation levels in the drywell due to the reactor, to valves that do not unduly limit the service life of the equipment located in the drywell. In addition, the reactor shield wall reduces gamma heating effects on the drywell wall, as well as providing for low radiation levels in the drywell during reactor shutdown. Penetrations through the reactor shield wall are shielded to the extent that radiation streaming through the penetrations does not exceed the total neutron and gamma dose rates at the core midplane just outside the reactor shield wall. The drywell is an F radiation zone during full power reactor operation and is not accessible during this period.

The upper drywell radiation shield design differs significantly from prior BWR designs in that the upper drywell shield extends to within 10.2 cm of the drywell ceiling, thereby presenting a collimated angle to the upper drywell for fuel bundles as they are raised from the core to the upper pools. The design is shown in Figure . This design also protects from the remote possibility of a fuel bundle being dropped onto the refueling bellows, in that a lip has been added to the upper drywell ceiling to shield and collimate radiation streaming into the upper drywell from a fuel bundle on the bellows. This lip which extends 36.6 cm toward the vessel from the drywell ceiling wall and is 51.8 cm in height, consists of concrete with the bottom 5.1 cm of the lip made of steel with the steel plate extending 61 cm into the upper drywell. The radiation fields generated by a dropped fuel bundle event are shown in Figure and, though not low, are sufficiently low to permit egress of the area without significant operator exposure. The radiation field runs at a maximum 5.6 Gy/h in the far upper corner nearest the bundle, dropping to less than 3 Gy/h within 50 cm and below 1 Gy/h at 1.5m from the corner.

The drywell wall is a 2m thick reinforced concrete cylinder, which is topped by a 2.4m thick reinforced concrete cap. The drywell wall attenuates radiation from the reactor and other radiation sources in the drywell, such as the recirculation system and main steam piping, to allow occupancy of the Reactor Building during full power reactor operation.

(2) Reactor Building

In general, the shielding for the Reactor Building is designed to maintain open areas at dose rates less than 10 μGy/h.

Penetrations of the drywell wall are shielded to reduce radiation streaming through the penetrations. Localized dose rates outside these penetrations are limited to less than 50 μGy/h. The penetrations through interior shield walls of the Reactor Building are shielded using a lead-loaded silicone sleeve to reduce the radiation streaming. Penetrations are also located so as to minimize the impact of radiation streaming into surrounding areas.

The components of the Reactor Water Cleanup (CUW) System are located in the Reactor Building. Both the CUW regenerative and non-regenerative heat exchangers are located in shielded cubicles separated from the other components of the system. Neither cubicle needs to be entered for system operation.

Process piping between the heat exchangers and the filter/demineralizers is routed through shielded areas or embedded in concrete to reduce the dose rate in surrounding areas. The two CUW System filter/demineralizers are located in separate shielded cubicles, which allows maintenance of one unit while operating the other. The dose rate in the adjoining filter/demineralizer cubicle from the operating unit is

less than 60 μGy/h. Entry into the filter/demineralizer cubicle, which is infrequently required, is via a stepped shield plug at the top of the cubicle. The bulk of the piping and valves for the filter/demineralizers is located in an adjacent shielded valve gallery. Backflushing and resin application of the filter/demineralizers are controlled from an area where dose rates are less than 10 μGy/h. The CUW System backwash receiving tank is also separately shielded from the other components of the CUW System, including the tank discharge pump, which allows maintenance of the pump without direct exposure to the spent resins contained in the backwash tank. The backwash tank cubicle is shielded to reduce the dose rate outside the entry to less than 10 μGy/h.

The traversing incore probe (TIP) consists of three sets of detectors, cables, and mechanical components which are periodically driven into the core via three guide tubes penetrating the primary containment at the 1700 level above the personnel airlock. A TIP indexer located in the access tunnel then permits the TIPs to be driven into any of 52 separate housing lines into the core for instrumentation calibration. Because the TIP system is subject to neutron activation during core operation, the TIP detector and approximately 3.66 m of cable are activated (Subsection 12.2.1.2.9.3). Therefore, the TIP has become a special point of protection both during use and when withdrawn from the core as is discussed below.

The TIP is utilized for a period of approximately three hours once a month during power operations when the reactor is above 50% power. For the 48-hour period (Table 12.2-24) following withdrawal of the TIP from the core, special precautions are necessary to protect workers from inadvertent exposure to the TIP. Shielding of the TIP, when completely withdrawn from the core and stored, is supervised by locating the higher radiation components in a separate shielded room with a locked entry at the 1500 level. The TIP itself is withdrawn into a lead shielded cask with activated cable covered by a lead shield to permit entry into the TIP room during the first 48 hours after withdrawal from the core. The TIP location is maintained by a set of position sensors which are alarmed to the control room. Area radiation monitors in both the TIP room and its associated spooler room maintain a secondary surveillance of both rooms causing alarms in both the control room and locally in the TIP facility mandating immediate egress from the TIP area. In the unlikely event of a spooler failing to stop on TIP withdrawal, the TIP system incorporates an electromechanical switch which cuts power to the spoolers, thereby preventing damage to the system or pulling the TIP onto the spoolers. After a 48-hour cooldown period, radiation levels are sufficiently reduced (to less than 200 μGy/h) to permit maintenance activities.

While in use, the TIPs must transverse a limited but essentially open area from the TIP room to the drywell penetration. To protect workers in the access way to the personnel air lock from inadvertent exposure, three measures are taken. The first

measure is primarily administrative requiring any work in the area to be done under a controlled radiation work permit (RWP). Such a permit is required prior to entry to this area, since the area is always key-locked into the access pathway. No TIP activity should be scheduled when RWPs indicate work in the area. The second measure is a series of two flashing alarms, one located in the access way and the second external to the access way by the locked door. Both alarms are activated upon power being supplied to the TIP spoolers. The alarm in the personnel air lock area requires evacuation of the area, while the alarm on the locked door warns against entry to the area when flashing. The third measure is designed to reduce potential exposure in the event prior measures fail. During use, the TIP system moves along the separate lines performing specific measurements in the core. Upon withdrawal from the core, the TIPs automatically switch to high mode motion, pulling the TIPs from the indexer to the TIP room at 27.4m per minute. This provides an estimated exposure time of four seconds for people in the access entrance and an exposure assuming one TIP in motion of less than 1000 μGy.

(3) ECCS Components

The ECCS are located in separately shielded cubicles. Shield labyrinths are provided to gain entry into the cubicles, and equipment removal doors are shielded with removable horizontally and vertically lapped concrete block. Piping to and from the ECCS is routed through shielded pipe chases. Access into the cubicles is not required to operate the systems. In general, the radiation levels in the open corridors of the Reactor Building are less than 10 μGy/h, except during RHR shutdown cooling mode operation, when radiation levels may temporarily range between 10 and 50 μGy/h in areas near the RHR cubicles.

The CUW System pumps are located in a shielded cubicle designed to reduce the radiation levels in the adjoining open corridor to less than 10 μGy/h. The pumps are separated by shield walls to allow operation of one of the pumps while performing maintenance on the other. Dose rates at this pump due to the operating pump and piping are less than 50 μGy/h. A shielded valve gallery is employed to permit manual operation of the valves associated with the CUW System pumps without entering the pump area. Piping for the pumps is directly routed from the steam tunnel to the CUW System pump area.

The CRD maintenance room walls are designed to reduce dose rates in the adjoining corridor to less than 10 μGy/h during all CRD maintenance operations except CRD transfer, when dose rates in the corridor temporarily range between 10 and 50 μGy/h.

The main steamlines are located in the shielded steam tunnel. The steam tunnel reduces the dose rates from the steamlines to less than 10 μGy/h in all adjoining areas except the roof of the steam tunnel, which is less that 50 μGy/h.

(4) Fuel Components

The fuel storage pool is designed to insure that the dose rate around the pool area is less than 10 μSv/h. In the event of an anticipated operational occurence where the fuel sustains significant damage, such as a fuel drop accident, airborne dose rates in the pool area may significantly exceed this dose rate. Egress from this area can be successfully accomplished well before dose rates exceed moderate levels (250 μSV/h) since the local area radiation monitors will alarm in the area.

(5) Control Room

The dose rate in the control room is much less than 10 μGy/h normal reactor operating conditions. The outer walls of the Control Building are designed to attenuate radiation from radioactive materials contained within the Reactor Building and from possible airborne radiation surrounding the Control Building following a LOCA. The walls provide sufficient shielding to limit the direct-shine exposure of control room personnel following a LOCA to a fraction of the 5 Rem limit as is required by 10CFR50 Appendix A, Criterion 19. Shielding for the outdoor air cleanup filters is also provided to allow temporary access to the mechanical equipment area of the Control Building following a LOCA, should it be required.

(6) The main steam tunnel extends from the primary containment boundary in the Reactor Building through the Control Building up to the turbine stop valves. The primary purpose of the steam tunnel is to shield the plant complex from N-16 gamma shine in the main steamlines. A minimum of 1.6 meters of concrete or its equivalent (other material or distance) is required on any ray pathway from the main steamlines to any point which may be inhabited during normal operations. The design of the steam tunnel is shown on Figures 1.2-14, 1.2-15, 1.2-20, 1.2-21, and 1.2-28. The tunnel is classified as Seismic Category I in the Reactor Building and in the Control Building and is designed to UBC Seismic Standards in the Turbine Building. The interface between the buildings provides for bayonet connection to permit differential building motion during seismic events and shielding in the areas between buildings. The exact details on the bayonet design are not shown on the referenced arrangement drawings but requires complete shielding in the building interface area. The tunnel also serves a secondary purpose as a relief and release pathway for high energy events in the Reactor Building. Any high energy event (line break) in the Reactor Building will, through a series of blow out panels, vent into the steam tunnel and from the steam tunnel through the tunnel vent shaft to the Turbine Building (Figure 1.2-28) for processing to the plant stack. See Subsection 6.2.3.3.1 for more complete description of this function.

12.3.3 Ventilation

The HVAC systems for the various buildings in the plant are discussed in Section 9.4, including the design bases, system descriptions, and evaluations with regard to the heating, cooling, and ventilating capabilities of the systems. This section discusses the radiation control aspects of the HVAC systems.

12.3.3.1 Design Objectives

The following design objectives apply to all building ventilation systems:

(1) The systems shall be designed to make airborne radiation exposures to plant personnel and releases to the environment ALARA. To achieve this objective, the guidance provided in Regulatory Guide 8.8 shall be followed.

(2) The concentration of radionuclides in the air in areas accessible to personnel for normal plant surveillance and maintenance shall be kept below the limits of 10CFR20 during normal power operation. This is accomplished by establishing in each area a reasonable compromise between specifications on potential airborne leakages in the area and HVAC flow through the area. Appendix 12A to this chapter outlines the methodology by which such calculations are made. As part of plant inspections, tests, analyses and acceptance criteria, Table 3.2(b) of Tier 1 requires the COL licensee to perform calculations for the expected airborne radionuclide concentrations to verify the adequacy of the ventilation system prior to fuel load. See Subsection 12.3.7.1 for COL license information.

The applicable guidance provided in Regulatory Guide 1.52 has been implemented for the ESF filter systems for the Control Building outdoor air cleanup system and the Standby Gas Treatment System (STGS) as described in Subsections 6.5.1 and 9.4.1.

12.3.3.2 Design Description

In the following sections, the design features of the various ventilation systems that achieve the radiation control design objectives are discussed. For all areas potentially having airborne radioactivity, the ventilation systems are designed such that during normal and maintenance operations, airflow between areas is always from an area of low potential contamination to an area of higher potential contamination.

12.3.3.2.1 Control Room Ventilation

The Control Building atmosphere is maintained at a slightly positive pressure (up to 6.4 mm wg) at all times, except if exhausting or isolation are required, in order to prevent infiltration of contaminants. Fresh air is taken in via a dual inlet system, which has both intake structures on the roof of the building. The inlets are arranged with respect to the SGTS exhaust stack such that at least one of the intakes is free of contamination after a LOCA. Both inlets, however, can

be submerged in contaminated air from a LOCA, but the calculated dose in the control room from such an eventuality is still below the limit of Criterion 19 of 10CFR50 Appendix A.

Outside air coming into the intakes is normally filtered by a particulate filter. If a high radiation level in the air is detected by the Airborne Radiation Monitoring System, flow is automatically diverted to another filter train (an outdoor air cleanup unit) that has:

(1) A particular filter

(2) A HEPA filter

(3) A charcoal filter

(4) Another HEPA filter

Two redundant, divisionally separated radiation monitors and filter trains are provided (see Subsection 9.4.1 for detailed description of the design). Conservative calculations show that the filters keep the dose in the control room from a LOCA below the limits of Criterion 19 of 10CFR50 Appendix A.

The outdoor cleanup units are located in individual, closed rooms that help prevent the spread of any radiation during maintenance. Adequate space is provided for maintenance activities. The particulate and HEPA filters can be bagged when being removed from the unit. Before removing the charcoal, any radioactivity is allowed to decay to minimal levels, and is then removed through a connection in the bottom of the filter by a pneumatic transfer system. Air used in the transfer system goes through a HEPA filter before being exhausted. Face masks can be worn during maintenance activities, if desired.

12.3.3.2.2 Drywell

Access into the drywell is not permitted during normal operation. The ventilation system inside merely circulates, without filtering, the air. The only airflow out of the drywell into accessible areas is minor leakage through the wall.

During maintenance, the drywell air is purged before access is allowed.

12.3.3.2.3 Reactor Building

The Reactor Building HVAC System is divided into three zones, which are separated by leaktight, physical barriers. The zones are:

(1) Secondary containment (this area contains equipment that is a potential source of radioactivity and, if a leak occurs, the other accessible areas of the building are not contaminated).

(2) Electrical equipment area, cable tunnels, cable spreading rooms, remote control panel area, diesel generator rooms, reactor internal pump panel rooms, and the heating and ventilating equipment rooms.

(3) Steam tunnel (this room also contains a potential source of radioactive material leakage).

Air pressure in the rooms in Zone 1 is maintained slightly below outside atmospheric pressure by a fresh air supply and exhaust system. The supply air is filtered by a particulate filter. The exhaust stream is monitored for radioactivity, and if a high activity level is detected, the exhaust stream is diverted to the SGTS.

Normally, exhaust air is drawn from the corridor and various rooms. The exhaust duct has two isolation valves in series and a radiation monitor. The valves isolate the system if high airborne radioactivity is detected by the radiation monitor.

Zone 2 of the Reactor Building is maintained at a positive pressure during normal operation.

Zone 3 is open to both the Turbine Building and the environment through a blow-out vent at the Turbine Building steam tunnel interface.

For a description of the Reactor Building HVAC System see Subsection 9.4.5.

12.3.3.2.4 Radwaste Building

The Radwaste Building is divided into two zones for ventilation purposes. The control room is one zone, and the remainder of the building is the other zone. The air pressure in the first zone is maintained slightly above atmospheric, while the air pressure in the second zone is maintained slightly below atmospheric. Air in the second zone is drawn from outside the building and distributed to various work areas within the building. Air flows from the work areas and is then discharged via the Reactor Building stack. An alarm sounds in the control room if the exhaust fan fails. The exhaust flow is monitored for radioactivity, and if a high activity level is detected, the potentially radioactive cells are automatically isolated, but airflow through the work areas continues.

If the exhaust flow high-radiation alarm continues to annunciate after the tank and pump rooms are isolated, the work area branch exhaust ducts are selectively manually isolated to locate the involved building area. Should this technique fail, because the airborne radiation has spread throughout the building, the control room air conditioning continues, but the air conditioning for the balance of the building is shut down.

The work area's exhaust air is drawn through a filter unit consisting of a particulate filter and a HEPA filter, before being discharged to the Reactor Building stack. The air is monitored for radioactivity and, if a high level is detected, supply and exhaust is terminated.

Maintenance provisions for the filters are similar to those for the Control Building HVAC System.

See Subsection 9.4.6 for a detailed discussion of the Radwaste Building HVAC System.

12.3.4 Area Radiation and Airborne Radioactivity Monitoring Instrumentation

The following systems are provided to monitor area radiation and airborne radioactivity within the plant:

(1) The Area Radiation Monitoring System (D21/ARM) continuously measure, indicate and record the gamma radiation levels at strategic locations throughout the plant except within the primary containment, and activate alarms locally as well as in the control room on high levels to warn operating personnel to avoid unnecessary or inadvertent exposure. This system is classified as non-essential.

(2) The Containment Atmospheric Monitoring System (D23/CAM) continuously measures, indicates, and records the gamma radiation levels within the primary containment (drywell and suppression chamber), and activates alarms in the main control room on high radiation levels. As described in Subsection 7.6.2, four gamma sensitive ion chamber channels are provided to monitor gamma radioactivity in the primary containment during normal, abnormal and accident conditions. Each of the four monitoring channels covers the range from 10^{-2} Gy/h to 10^{5} Gy/h. The CAM System is classified as safety-related.

(3) The airborne radioactivity in effluent releases and ventilation exhausts is continuously sampled and monitored by the Process Radiation Monitoring System (D11/PRM) for noble gases, air particulates and halogens. As described in Section 11.5, the presence of airborne contamination is sampled and monitored at the stack common discharge, in offgas releases, and in the ventilation exhaust from buildings. Samples are periodically collected and analyzed for radioactivity. In addition to this instrumentation, portable air samplers are used for compliance with 10CFR20 restrictions. This portable system is designed to meet the criteria of Table 3.2b of Tier 1 and monitors airborne radioactivity in work areas prior to entry where potential levels exist that may exceed the allowable concentration limits. The instrumentation provided to monitor airborne radioactivity is classified as non-essential, and is the responsibility of the COL applicant. See Subsection 12.3.7.2 for COL license information.

12.3.4.1 ARM System Description

The Area Radiation Monitoring (ARM) System consists of gamma sensitive detectors, digital area radiation monitors, local auxiliary units with indicators and local audible warning alarms, and recording devices. The detector signals are digitized and optically multiplexed for transmission to the radiation monitors in the main control room. Each ARM radiation channel

has two independently adjustable trip alarm circuits, one is set to trip on high radiation and the other is set to trip on downscale indication (loss of sensor input). Also, each ARM monitor is equipped with self-test feature that monitors for gross failures and will activate an alarm on loss of power or when a failure is detected. Auxiliary units with local alarms are provided in selected local areas for radiation indication and for activating the local audible alarms on abnormal levels. Each area radiation channel is powered from the non-Class 1E vital 120 VAC source, which is continuously available during loss of offsite power. The recording devices are powered from the 120 VAC instrument bus.

12.3.4.2 ARM Detector Location and Sensitivity

The location of each area detector is shown on the plant layout drawings for each building (Figures 12.3-56 through 12.3-73). The specific area radiation channels for each building are listed in Tables 12.3-3 through 12.3-7, along with reference to map location of the detector, the channel sensitivity range, and the areas for the local alarms. The range and sensitivity of each area radiation channel is classified as follows:

(1) Range 0.10 μGy/h to 1 mGy/h-H (High Sensitivity)

(2) Range 1 μGy/h to 10 mGy/h-M (Medium Sensitivity)

(3) Range 10 μGy/h to 10^2 mGy/h-L (Low Sensitivity)

(4) Range 1 mGy/h to 10 Gy/h-LL (Low Low Sensitivity)

(5) Range 1 mGy/h to 10^2 Gy/h-VL (Very Low Sensitivity)

12.3.4.3 Pertinent Design Parameters and Requirements

Two high-range radiation channels are provided to monitor radiation from accidental fuel handling. One detector is positioned near the fuel pool and the other located in the fuel handling area. Criticality detection monitors are not needed to satisfy the criticality accident requirements of 10CFR70.24, when specialized high density fuel storage racks preclude the possibility of criticality accident under normal and abnormal conditions. The new fuel bundles are stored in racks that are located in the fuel vault while the spent fuel bundles are stored in racks that are placed at the bottom of the fuel storage pool. A full array of loaded fuel storage racks are designed to be subcritical, as defined in Sections 9.1 and 9.2. The COL applicant must verify and certify that the design meets the criteria specified in Subsection 12.3.7.3.

The detectors and radiation monitors are responsive to gamma radiation over an energy range of 0.013 pJ to 1.12 pJ. The energy dependence from 0.016 pJ to 0.481 pJ is accurate within ±20% . The overall system design accuracy is within 9.5% of equivalent linear full-scale recorder output for any decade.

The alarm setpoints will be established in the field by the COL applicant, as specified in Subsection 12.3.7.2, following equipment installation at the site. The exact settings will be based on sensor location, background radiation levels, expected radiation levels, and low occupational radiation exposures. The high radiation alarm setpoint for each channel is set slightly above the background radiation level that is normal to the area.

The area radiation monitoring instrumentation is designed to provide early detection and warning for personnel protection to insure that occupational radiation exposures will be as low as is reasonably achieved (ALARA) in accordance with guidelines stipulated in Regulatory Guide 8.2 and 8.8.

The Area Radiation Monitoring System includes instrumentation provided to assess the radiation conditions in crucial areas in the Reactor Building (the RHR equipment areas) where access may be required to service the safety-related equipment during post-LOCA per Regulatory Guide 1.97.

12.3.5 Post-Accident Access Requirements

The locations requiring access to mitigate the consequences of an accident during the 100-day post-accident period are the control room, the technical support center, the remote shutdown panel, the primary containment sample station (Post-Accident Sample System), the health physics facility (counting room), the nitrogen gas supply bottles, and the firewater valve room (see special stipulations below). Each area has low post-LOCA radiation levels. The dose evaluations in Subsection 15.6.5 are within regulatory guidelines.

Access to vital areas throughout the Reactor Building/Control Building/Turbine Building complex is controlled via the Service Building. Entrance to the Service Building and access to the other areas are controlled via double-locked secured entry ways. Access to the Reactor Building is via two specific routes, one for clean access and the second for controlled access. During an event such as a design basis accident, the Service Building/Control Building are maintained under filtered HVAC at a positive pressure with respect to the environment. Air infiltration is minimized by positive flow via double entry ways. Therefore, radiation exposure is limited to gamma shine from the Reactor Building, Turbine Building, main steamline access corridor, and skyline. This shine is minimized by locating highly populated areas below ground.

During a DBA event, access to remote shutdown panel, nitrogen bottles, and the PASS and monitor systems is controlled from the Service Building via the controlled access way. These corridors are not maintained under filtered positive pressure so that personal protection equipment (radiation protection suits, breathing gear, etc.) will be required in the access corridor. Primary contamination would occur from leakage through the PASS system and air infiltration from the environment. Both pathways are considered minimal and minor contamination under even the most adverse conditions is expected.

The Reactor Building vital areas are all located off one of the two primary access ways except the nitrogen bottle areas, which are located on the refueling floor and are accessible from the clean access corridor at the 4800 level (B1F) and up three floors to the 23500 level (3F). There are two access corridors, clean and dirty, with contamination in those areas limited to air infiltration from the environment and penetration leakage from the PASS system. In addition the lines penetrating the PASS room are doubly valved permitting line isolation in the event of any potential rupture. Sources of radiation therefore are limited to minor leakage and gamma shine, including the stack monitor room which contains only instrumentation and associated penetrations for monitoring stack effluent.

The firewater valve room (designated Room 431) shall be considered a vital area for those cases when the RHR System fails or has not been used. Entry to this area is permitted and planned for those low probability events when no contaminated containment water has circulated through the components in Room 431.

12.3.6 Post-Accident Radiation Zone Maps

The post-accident radiation zone maps for the areas in the Reactor Building are presented in Figures 12.3-12 through 12.3-22. The zone maps represent the maximum gamma dose rates that exist in these areas during the post-accident period. These dose rates do not include the airborne contribution in the Reactor Building.

Post-accident zone maps of the Control Building and Turbine Building are presented in Figures 12.3-54 and 12.3-55 respectively. The zone maps are designed to reflect the criteria established in Subsection 3.1.2.2.10.

12.3.7 COL License Information

12.3.7.1 Airborne Radionuclide Concentration Calculation

The COL applicant will provide the calculations of the expected concentrations of the airborne radionuclide for the requisitioned ABWR plant design (Subsection 12.3.3.1).

12.3.7.2 Operational Considerations

Area radiation monitoring operational considerations, such as monitor alarm setpoints, listed in Regulation Guide 1.70 are the COL applicant's responsibility. Airborne radiation monitoring operational considerations such as the procedures for operations and calibration of the monitors, as well as the placement of the portable monitors, are also the COL applicant's responsibility (Subsection 12.3.4).

12.3.7.3 Requirements of 10CFR70.24

COL applicants will provide information showing that their plant meets the requirements of 10CFR70.24 or request an exemption from this 10CFR 70.24 requirement (Subsection 12.3.4.3).

12.3.7.4 Material Selection

The COL applicant shall address state-of-the-art developments in material selection options for maintaining exposure ALARA.

12.3.8 References

12.3-1 N. M. Schaeffer, "Reactor Shielding for Nuclear Engineers", TID-25951, U.S. Atomic Energy Commission (1973).

12.3-2 J. H. Hubbell, "Photon Cross Sections, Attenuation Coefficients, and Energy Absorption Coefficients from 10 KeV to 100 GeV", NSRDS-NBS 29, U.S. Department of Commerce, August 1969.

12.3-3 "Radiological Health Handbook", U.S. Department of Health, Education, and Welfare, Revised Edition, January 1970.

12.3-4 "Reactor Handbook", Volume III, Part B, E.P. Blizzard, U.S. Atomic Energy Commission (1962).

12.3-5 Lederer, Hollander, and Perlman, "Table of Isotopes", Sixth Edition (1968).

12.3-6 M.A. Capo, "Polynomial Approximation of Gamma Ray Buildup Factors for a Point Isotropic Source", APEX-510, November 1958.

12.3-7 Reactor Physics Constants, Second Edition, ANL-5800, U.S. Atomic Energy Commission, July 1963.

12.3-8 ENDF/B-III and ENDF/B-IV Cross Section Libraries, Brookhaven National Laboratory.

12.3-9 PDS-31 Cross Section Library, Oak Ridge National Laboratory.

12.3-10 DLC-7, ENDF/B Photo Interaction Library.

Table 12.3-1 Computer Codes Used in Shielding Design Calculations

Computer Code Description	
QADF	A multigroup, multiregion, point kernal, gamma ray code for calculating the flux and dose rate at discrete locations within a complex source-geometry configuration.
GGG	A multigroup, multiregion, point kernal code for calculating the contribution due to gamma ray scattering in a heterogeneous three-dimensional space.
DOT4.4	A discrete ordinate, two-dimensional transport code. Multigroup, multiregion neutron or gamma transport.

Table 12.3-2 Typical Nickel and Cobalt Content of Materials

Material	Nickel (%)	Cobalt (%)
Carbon Steel	0.25	1% of Ni
Stainless Steel	10	1% of Ni
Ni-Cr-Fe (Inconel 600, Inconel X750)	70	1% of Ni
Stellite 6	3	58

Table 12.3-3 Area Radiation Monitors Reactor Building

No.	Location & Description	Figure #	Sensitivity Range	Local Alarms
1	Reactor area (A)-4F	12.3-62	H	X
2	Reactor area (B)-4F	12.3-62	LL	
3	Fuel storage pool area (A)-4F	12.3-62	LL	X
4	Fuel storage pool area (B)-4F	12.3-62	LL	
5	R/B 4F south area	12.3-62	H	
6	R/B 4F SE area	12.3-62	H	X
7	R/B 3F NW area	12.3-60	H	
8	R/B 3F SE area	12.3-60	H	X
9	CUW control panel area-B3F	12.3-56	H	
10	R/B equipment hatch-B2F	12.3-57	H	X
11	HCU area (A)-B3F	12.3-56	M	X
12	HCU area (B)-B3F	12.3-56	M	X
13	SRV/MSIV valve maintenance room-3F	12.3-63	M	X
14	R/B 1F SE hatch area	12.3-49	H	X
15	RPV instrument rack room (A)-B1F	12.3-58	H	X
16	PV instrument rack room (B)-B1F	12.3-58	H	X
17	R/B B1F SE hatch area	12.3-58	H	
18	TIP drive machine room-EL 1500	12.3-57	M	X
19	TIP machine equipment room-EL 1500	12.3-57	L	X
20	Core cooling water sampling room-M4F	12.3-61	M	X
21	CRD maintenance room-B2F	12.3-57	M	X
22	R/B B2F SE hatch area	12.3-57	H	X
23	R/B B2F NW hatch area	12.3-57	H	X
24	R/B B3F NW area-RHR “A” equip area	12.3-56	VL	X
25	R/B B3F SE area-RHR “B” equip area	12.3-56	VL	X

Table 12.3-4 Area Radiation Monitors Control Building

No.	Location & Description	Figure #	Sensitivity Range
1	Main Control Room	12.3-64	H
2	Passageway underneath steam tunnel	12.3-64	H
3	RBCW “A” area-El-1315	12.3-64	H
4	RBCW “B” area-El-1315	12.3-64	H
5	RBCW “C” area-El-1315	12.3-64	H

Table 12.3-5 Area Radiation Monitors Service Building

No.	Location & Description	Figure #	Sensitivity Range
1	Service Building Tech. Support Center	12.3-64	H

Table 12.3-6 Area Radiation Monitors Radwaste Building

No.	Location & Description	Figure #	Sensitivity Range	Local Alarms
1	R/W Building Control Room-El 16000	12.3-68	H	
2	Maintenance area #1-El 16000	12.3-68	H	X
3	Maintenance area #2-El 16000	12.3-68	H	X
4	R/W Building HVAC Exhaust El 1600	12.3-68	H	
5	R/W Building Truck Area-El 7300	12.3-67	H	
6	MSW Compactor Area-El 7300	12.3-67	H	
7	Corridor to Aux. Building-El 7300	12.3-67	H	X
8	Equip Rack Area #1-El-0200	12.3-66	H	
9	Equip Rack Area #2-El-0200	12.3-66	H	
10	R/W Building MSW Control Room-El-0200	12.3-66	H	
11	Radwaste Sampling Room-El-6500	12.3-65	H	
12	MSW Equipment Area-El-6500	12.3-65	H	X
13	R/W Equipment Rack Area #1-El-6500	12.3-65	H	
14	R/W Equipment Rack Area #2-El-6500	12.3-65	H	

Table 12.3-7 Area Radiation Monitors Turbine Building

No.	Location & Description	Figure #	Sensitivity Range	Local Alarms
1	Condensate Pump Maintenance Area	12.3-70	M	
2	Condensate Sampling & Control Area	12.3-70	M	X
3	Offgas Sample & Control Area	12.3-70	M	X
4	RFP 1A, 1B & 1C Area	12.3-70	H	X
5	Filter Maintenance Area	12.3-71	M	X
6	Demineralizer Area	12.3-71	H	
7	SJAE A & Recombiner Area	12.3-71	H	
8	SJAE B & Recombiner Area	12.3-71	H	
9	HP Heaters & Drain Tank Area 1	12.3-71	H	
10	HP Heaters & Drain Tank Area 2	12.3-71	H	
11	MSR 1A & 1C Area	12.3-72	H	
12	MSR 1B & 1D Area	12.3-72	H	
13	Turbine Building Operating Floor	12.3-73	H	X
14	Equipment Main Access Area	12.3-73	H	X

The following figures are located in Chapter 21:

Figure 12.3-1 Reactor Building Radiation Zone Map for Full Power and Shutdown Operation at Elevation –8200 mm (B3F)

Figure 12.3-2 Reactor Building Radiation Zone Map for Full Power and Shutdown Operation at Elevation –1700 mm (B2F)

Figure 12.3-3 Reactor Building Radiation Zone Map for Full Power and Shutdown Operation at Elevation 4800/8500 mm (B1F)

Figure 12.3-4 Not Used

Figure 12.3-5 Reactor Building Radiation Zone Map for Full Power and Shutdown Operation at Elevation 12300 mm (1F)

Figure 12.3-6 Reactor Building Radiation Zone Map for Full Power and Shutdown Operation at Elevation 18100 mm (2F)

Figure 12.3-7 Reactor Building Radiation Zone Map for Full Power and Shutdown Operation at Elevation 23500 mm (3F)

Figure 12.3-8 Reactor Building Radiation Zone Map for Full Power and Shutdown Operation at Elevation 27200 mm (4F)

Figure 12.3-9 Reactor Building Radiation Zone Map for Full Power and Shutdown Operation at Elevation 31700 mm (4FM)

Figure 12.3-10 Reactor Building Radiation Zone Map for Full Power and Shutdown Operation at Cross Section View A–A

Figure 12.3-11 Reactor Building Radiation Zone Map for Full Power and Shutdown Operation at Cross Section View B–B

Figure 12.3-12 Reactor Building Radiation Zone Map Post-LOCA at Elevation –8200 mm (B3F)

Figure 12.3-13 Reactor Building Radiation Zone Map Post-LOCA at Elevation –1700 mm (B3F)

Figure 12.3-14 Reactor Building Radiation Zone Map Post-LOCA at Elevation 4800 mm/8500 mm (B1F)

Figure 12.3-15 Not Used

Figure 12.3-16 Reactor Building Radiation Zone Map Post-LOCA at Elevation 12300 mm (1F)

Figure 12.3-17 Reactor Building Radiation Zone Map Post-LOCA at Elevation 18100 mm (2F)

Figure 12.3-18 Reactor Building Radiation Zone Map Post-LOCA at Elevation 23500 mm (3F)

Figure 12.3-19 Reactor Building Radiation Zone Map Post-LOCA at Elevation 27200 mm (4F)

Figure 12.3-20 Reactor Building Radiation Zone Map Post-LOCA at Elevation 31700 mm (4FM)

Figure 12.3-21 Reactor Building Radiation Zone Map Post-LOCA at Cross Section A–A

Figure 12.3-22 Reactor Building Radiation Zone Map Post-LOCA at Cross Section B–B

Figures 12.3-23 thru 12.3-35 Not Used

Figure 12.3-36 Radwaste Building, Equipment List (Sheets 1-2)

Figure 12.3-37 Radwaste Building, Radiation Zone Map, Normal Operation at Elevation –1500 mm

Figure 12.3-38 Radwaste Building, Radiation Zone Map, Normal Operation at Elevation –4800 mm

Figure 12.3-39 Radwaste Building, Radiation Zone Map, Normal Operation at Elevation 12300 mm

Figure 12.3-40 Radwaste Building, Radiation Zone Map, Normal Operation at Elevation 21000 mm

Figure 12.3-41 Radwaste Building, Radiation Zone Map, Normal Operation at Cross Section A–A

Figure 12.3-42 Control Building, Radiation Zone Map, Normal Operations at Floor Level TMSL –8200 mm

Figure 12.3-43 Control Building, Radiation Zone Map, Normal Operations at Floor Level TMSL –2150 mm

Figure 12.3-44 Control Building, Radiation Zone Map, Normal Operations at Floor Level TMSL 3500 mm

Figure 12.3-45 Control Building, Radiation Zone Map, Normal Operations at Floor Level TMSL 7900 mm

Figure 12.3-46 Control Building, Radiation Zone Map, Normal Operations at Floor Level TMSL 12300 mm

Figure 12.3-47 Control Building, Radiation Zone Map, Normal Operations at Floor Level TMSL 17150 mm

Figure 12.3-48 Control Building, Radiation Zone Map Normal Operation, Side View

Figure 12.3-49 Turbine Building, Radiation Zone Map at Elevation 5300 mm

Figure 12.3-50 Turbine Building, Radiation Zone Map at Elevation 12300 mm

Figure 12.3-51 Turbine Building, Radiation Zone Map at Elevation 20300 mm

Figure 12.3-52 Turbine Building, Radiation Zone Map at Elevation 30300 mm

Figure 12.3-53 Turbine Building, Radiation Zone at Normal Operation Longitudinal Section A–A

Figure 12.3-54 Control Building, Radiation Zone, Post-LOCA, Side View

Figure 12.3-55 Turbine Building, Radiation Zone, Post-LOCA, Longitudinal Section A–A

Figure 12.3-56 Reactor Building, Area Radiation Monitors, –8200 mm

Figure 12.3-57 Reactor Building, Area Radiation Monitors, 1700 mm and 1500 mm

Figure 12.3-58 Reactor Building, Area Radiation Monitors, 4800 mm

Figure 12.3-59 Reactor Building, Area Radiation Monitors, 12300 mm

Figure 12.3-60 Reactor Building, Area Radiation Monitors, 23500 mm

Figure 12.3-61 Reactor Building, Area Radiation Monitors, 27200 mm

Figure 12.3-62 Reactor Building, Area Radiation Monitors, 31700 mm

Figure 12.3-63 Reactor Building, Area Radiation Monitors, Section 270°/90°

Figure 12.3-64 Control and Service Buildings, Area Radiation Monitors

Figure 12.3-65 Radwaste Building, Area Radiation Monitors, Elevation –1500mm

Figure 12.3-66 Radwaste Building, Area Radiation Monitors, Elevation 4800mm

Figure 12.3-67 Radwaste Building, Area Radiation Monitors, Elevation 12300mm

Figure 12.3-68 Radwaste Building, Area Radiation Monitors, Elevation 21000mm

Figure 12.3-69 Not Used

Figure 12.3-70 Turbine Building, Grade Level 2, Area Radiation Monitors, Elevation 12300 mm

Figure 12.3-71 Turbine Building, Grade Level 3, Area Radiation Monitors, Elevation 20300 mm

Figure 12.3-72 Turbine Building, Grade Level 4, Area Radiation Monitors, Elevation 30300 mm

Figure 12.3-73 Turbine Building, Area Radiation Monitors, Longitudinal Section A–A

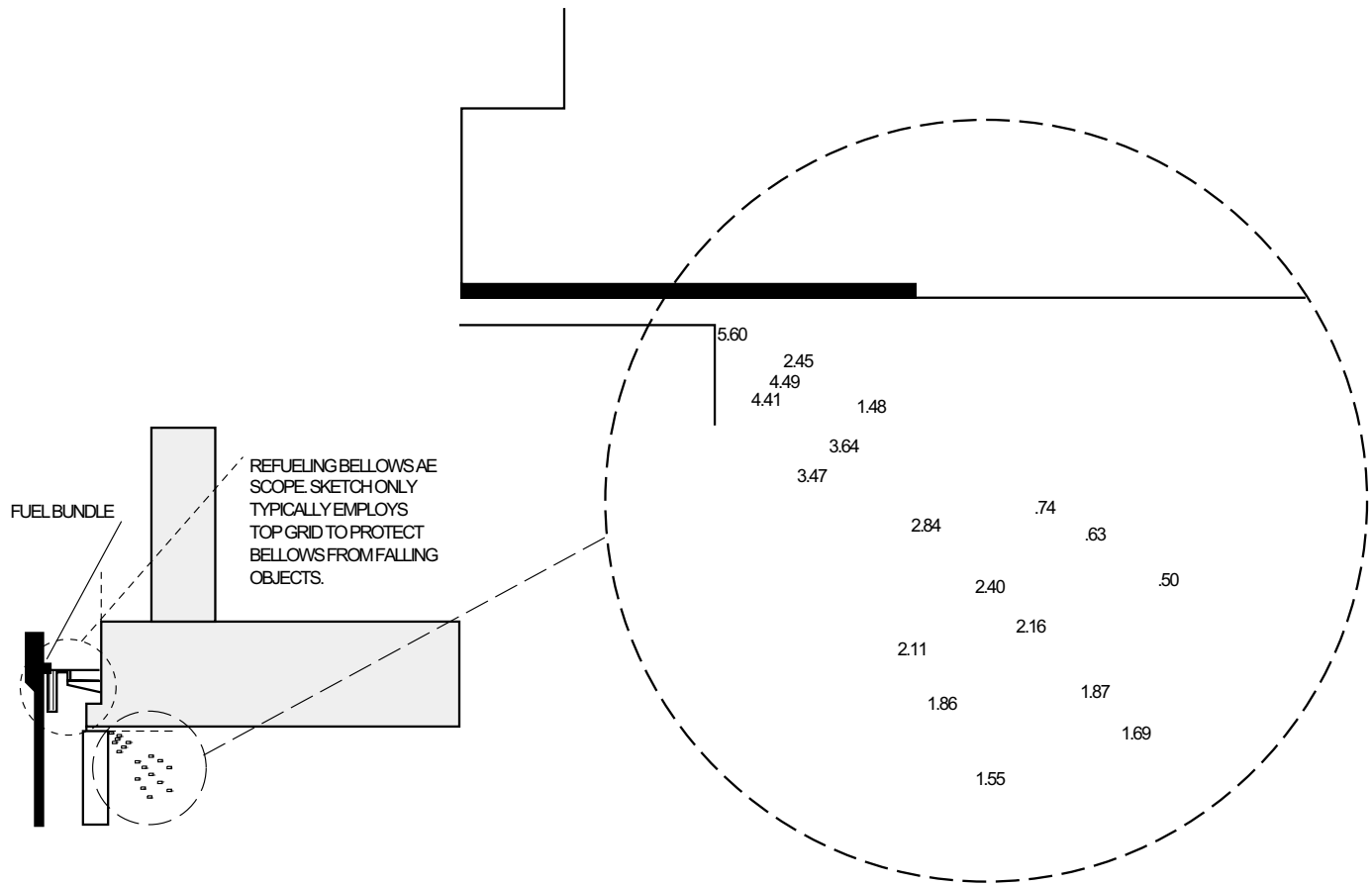

Figure 12.3-74 Upper Drywell Shielding Radiation Dose Rates with Fuel Bundle on Refueling Bellows (Gy/h)

12.4 Dose Assessment

Dose assessment is an important part of determining and projecting that the plant design and proposed methods of operation assure that occupational radiation exposure will be as low as reasonably achievable. Dose assessment depends upon estimates of occupancy, dose rates in various occupied areas, number of personnel involved in reactor operations and surveillance, routine maintenance, waste processing, refueling, inservice inspection, and special maintenance.

The goal is to reduce the exposure associated with each phase of plant operation and maintenance to the minimum level consistent with practical considerations for accomplishing each task. To achieve this goal, the ABWR design includes numerous significant design improvements to reduce occupational exposures from past experience. The design improvements include the elimination of recirculation piping and valves, improved water chemistry and low cobalt alloys at the cooling water boundary, reduced equipment maintenance and improved access, RHR discharge to the feedwater piping, overhaul handling and refueling devices, multiple main steamline plugs, automatic MSIV seat lapping system and reactor vessel stud tensioner. In assessing the collective occupational dose, each potentially significant dose-causing activity was evaluated. Values referred to as typical BWR operations are taken from References 12.4-1 through 12.4-4, which are a compendium of maintenance and work tasks for BWR-6, GESSAR.

12.4.1 Drywell Dose

The following provides the basis by which the drywell dose estimates for occupational exposure were made.

(1) The main steam isolation valves are located in the upper drywell area (4 valves) and in the Reactor Building outboard of the primary containment isolation wall (4 valves). These valves require periodic testing and maintenance to insure proper action and leaktightness. Typical values for BWRs for maintenance of these valves is 4,000 hours of drywell and 5,000 hours of Reactor Building work in effective radiation fields of 135 μGy/h and 36 μGy/h, respectively. The ABWR design incorporates three specific features to reduce occupational exposure in the MSIV maintenance area: (1) improved water chemistry with lower overall contamination rates; (2) improved maintenance procedures with some procedures automated; and (3) reduced radiation fields, primarily due to the absence of the recirculation piping. Each area is discussed below.

Beginning in the early 1980s, the BWR Owners' Group began an extensive study of the causes for failure of MSIVs to meet the technical leakage specification limits and extensive person-hours required to maintain these valves. As a result of these studies, the ABWR will use the latest technology for valve maintenance, including mechanical aids for valve disassembly and assembly, automated lapping devices, and

slightly relaxed leakage specifications to delete unnecessary maintenance. As a result of these aids, it is estimated that overall maintenance hours will be reduced by 50-60%.

Early studies on dose rates during MSIV maintenance showed increases in dose rate directly proportional to recirculation line activity. The ABWR has deleted the recirculation lines entirely, thereby removing the singly most significant source of radiation in the drywell. The second most significant dose for MSIV operations will be the deposited and suspended activity in the feedwater lines. The deposited activity in the feedwater lines is expected to be lower than typical BWRs owing to an enhanced condensate system with full cleanup of all condensate water, a 2% CUW System, and titanium condenser tubes. Additionally, the ABWR is designed to limit the use of cobalt bearing materials on moving components which have historically been identified as major sources of in-water contamination. Overall, the feedwater line radiation is expected to be a factor of three lower than current BWRs. Because of these factors, it is expected that the effective dose rate in the drywell will be 18 μGy/h and 13 μGy/h in the steam tunnel outboard of the primary containment.

(2) Drywell valve and pump maintenance other than the MSIVs consists primarily of maintaining the safety/relief valves (SRVs), which for the most part consist of minor maintenance or removal of valves to a maintenance facility. Overall typical values for a BWR for these tasks are 1,450 person-hours per year in an effective radiation field of 170 μGy/h. In the ABWR, the primary source of radiation exposure, the recirculation lines and pumps, have been removed. Overall, the reduction in drywell dose levels for these types of maintenance is expected to be a factor of two or 90 μGy/h. Overhead tracks and in-place removal equipment is provided in the ABWR for an estimated person-hour reduction to 1,150 person-hour per year broken down into 200 person-hours for 18 SRV maintenance at 60 μGy/h, 200 person-hours per year to pull and replace 3 RIPs with one heat exchanger at 200 μGy/h, and the remainder on miscellaneous valves at 45 μGy/h.

(3) Control rod drive maintenance is significantly reduced in the ABWR with the introduction of fine motion control rod drives (FMCRDs). Based upon European experience, two FMCRDs will be replaced and repaired per outage along with 20 motors. Estimated work will consist of 64 person-hours under vessel preparation, 40 person-hours FMCRD removal and reinstallation, 200 person-hours motor removal and installation, and 64 person-hours cleanup. Typical under vessel effective dose rates are 170 μGy/h but, because of the removal of the recirculation pumps and lines, dose rates have been reduced to 65 μGy/h.

(4) The LPRM/TIP system assumes the servicing of two sensors per year and is based upon a total of 200 person-hours per year at an effective dose rate of 500 μGy/h, which is typical for BWR operations.

(5) Inservice inspection consists of primarily NDE examination of vessel and piping systems and welds. Typical BWR values are 2400 person-hours per year at 120 μGy/h effective exposure rate. ABWR inservice inspection is estimated based upon the following:

Elimination of recirculation lines and pumps with the following savings:

(a) Elimination of 14 nozzle inspections at 2 per year, saving 360 person-hours.

(b) Elimination of shield penetration and shield plug removal saving 240 person-hours per year.

(c) Reduction on weld inspection on recirculation lines estimated at 240 person-hour per year.

(d) Reduction in drywell dose by 50% based upon the assumption that the contact dose rate on the feedwater line is less than half the contact dose rate on the typical BWR recirculation line. Hence, at equal distances from the line, the total general drywell dose rate which is dominated by the recirculation and feedwater lines will be less than half what is typically seen with recirculation lines.

Overall, it is estimated that by use of automated turtles for inspection, person-hours expended in ISI will be reduced by a factor of two.

The ABWR uses a forged ring pressure vessel in comparison to older plate welded vessels, reducing the total vessel weld length inspection by 30% and the total weld inspection in the drywell by 10%.

The ABWR design incorporates specific access panels and shield doors into required inspection areas permitting easy bypass of insulation areas, resulting in an estimated person-hour savings of 120 person-hours.

Overall person-hours reduction is 1,200 person-hours at approximately half the typical effective dose rate or 55 μGy/h.

(6) Other drywell work includes items such as minor valve maintenance, instrumentation work, and all other drywell work. These miscellaneous tasks in the drywell consume on the average 5,500 person-hours per year in a radiation field of 170 μGy/h. However, this average is a combination of some specific higher radiation tasks such as work on recirculation lines (involving snubbers, weld inspection, etc.) and many lower radiation tasks such as work on drywell coolers. Overall reduction in this effort due to ABWR design improvements are:

(a) Significant savings in total hours are estimated due to removal of the recirculation lines with miscellaneous recirculation line work such as line

snubbers, fewer drywell cooling units, and less assembly/disassembly work on insulation due to the use of automated units. Overall, it is estimated that 2,000 person-hours savings can be made.

(b) Overall reduction in the drywell radiation due to removal of the recirculation system results in the reduction of the overall upper drywell dose rate to 18 μGy/h and the lower drywell dose rate to 56 μGy/h, since the components involved such as drywell coolers typically do not carry radioactive inventory. Of the remaining 3,500 person-hours, 2,000 is upper drywell work and 1,500 is lower drywell work.

12.4.2 Reactor Building Dose

The following provides the basis by which the Reactor Building dose estimates for occupational exposure were made.

(1) Vessel access and reassembly typically requires 4500 person-hours of work at an effective dose rate of 30 μGy/h. The ABWR work will involve the use of a stud tensioner for a 96-bolt top head. The projected time to remove 96 bolts with this equipment is between 600 to 1200 person-hours. Due to the larger ABWR vessel and expected reduced water contamination with the improved cleanup system, the estimated projected effective dose rate is 15 μGy/h.

(2) ABWR refueling is accomplished via an automated refueling bridge. All operations for refueling are accomplished from an enclosed automation center off the refueling floor. Time for refueling is reduced from a typical 4,400 person-hours down to 2,000 person and from an effective dose rate of 25 μGy/h to less than 2 μGy/h.

(3) RHR/CUW maintenance work consists of inspections for two pumps per year in each system. In the RHR System this consumes 150 person-hours per year at an effective dose rate of 400 μGy/h. In the CUW System, this typically uses 1400 person-hours per year at an effective dose rate of 140 μGy/h. ABWR will use canned pumps for both systems with an estimated reduction in maintenance to 100 person-hours per pump. With improved water chemistry and overall reductions in reactor water concentrations due to the 2% cleanup system the effective dose rate is estimated at 20% of the typical value for these systems.

(4) FMCRD rebuilding estimates are taken from similar work done in Europe since no significant U.S. data exists to date. Two drives will be rebuilt at an effective dose rate of 45 μGy/h and 30–60 hours per drive.

(5) Instrumentation work typically requires 1,000 person-hours of work per year at an effective dose rate of 50 μGy/h the ABWR should take about the same effort in instrumentation; however, the increased emphasis and improved water chemistry systems, should reduce the effective dose rate to two-thirds the typical value or 30 μGy/h.

(6) All other work in the Reactor Building typically takes 7,400 person-hours per year at an effective dose rate of 28 μGy/h. This work includes all valve work, RIP rebuild work, minor maintenance, and CRD hydraulic line work. The major task in this area is the hydraulic control units which require 5,000 person-hours per year at an effective dose rate of 33 μGy/h. With the use of the FMCRD units, an additional savings of 2,000 person-hours is anticipated. In addition, the ABWR Reactor Building has been designed to provide for ease of maintenance with overhead lifts, coordinated hatch ways and ample space to maintain in place equipment. In addition, with the exception of one tank and the pressure vessel, all the equipment in the Reactor Building is removable with those pieces which can be expected to be moved being palatalized. Because of these factors, an overall reduction in work of 1,000 person-hours is estimated. Because of the improved water chemistry, the overall effective dose rate is anticipated at one-half the typical BWR dose rate.

12.4.3 Radwaste Building Dose

Radwaste Building work consists of pump and valve maintenance, shipment handling, radwaste management, and general cleanup activity. Typically, 6,700 hours are expended per year at an effective dose rate of 55 μGy/h. The ABWR Radwaste Building is designed along the same lines as newer radwaste facilities overseas. The building incorporates enhanced remote control and shielding for handling of resin materials, which is expected to reduce overall maintenance by 1500 to 2000 hour per year at significantly reduced dose levels. In addition, radwaste pumps for ABWR are expected to utilize air-driven, rack-mounted pumps. Such pumps, which are designed to handle slurries, have been proven to show much longer life times between maintenance and, being basically a very small portable pump, can be readily replaced. Replaced pumps are then subject to intense chemical decontamination prior to maintenance and repair. Overseas utilities have reported occupational exposures typically less than 0.01 person-sievert per year using this design. For the ABWR, it is then assumed that the maintenance effort expended per year is reduced by 2,000 person-hours from 6,700 to 4,700 person-hours due to the introduction of automated equipment. An additional reduction of 500 person-hours down to 4,200 person-hours is assumed based upon the use of air pumps as specified above. The overall radiation field to which the worker is exposed on the average is then expected to be reduced from 55 μGy/h to 25 μGy/h, since most of the high radiation tasks are eliminated by automation or remoting the tasks or, in the case of the air pumps, reduced by decontamination at separate facilities prior to pump maintenance.

12.4.4 Turbine Building Dose

(1) Typical BWR valve maintenance in the Turbine Building uses 1,150 hours per year at an effective dose rate of 95 μGy/h. The valve maintenance requirements for the ABWR do not vary significantly over current plants; therefore, the total hours for this type of work is assumed to be approximately the same excepting minor adjustments for improved valves, maintenance jigs, and automated devices, which will lower the estimated maintenance time to 1,000 hours. In the ABWR, the estimated effective radiation field of 39 μGy/h for Turbine Building work is expected to be less than half the typical dose rate of 95 μGy/h due to the use of newer fuels which are more resistant pin-size leaks. The radiation fields in the turbine hall during maintenance are a combination of contamination from fission products from the fuel and corrosion products from the vessel and piping. Offgas measurements of the performance of the newer fuels, when operated under proper water chemistry standards (required for ABWR), have shown fission product release an order of magnitude less than older fuels. Likewise, the ABWR has placed stringent controls over material usage especially in the vessel and other high temperature components to minimize corrosion product releases.

(2) In a similar fashion, the turbine maintenance work typically requires 18,500 hours of work at an effective dose rate of 3 μGy/h. With additional operational improvements in automating turbine maintenance, overall work is estimated to be reduced to 15,500 hours. The effective dose rate for the turbine is not expected to be as sensitive to fuel performance as will the turbines but is estimated to reflect a decrease in dose to 2 μGy/h for turbine overhaul work.

(3) Work on the turbine hall condensate system typically requires 2,000 hours per year at an effective dose rate of 75 μGy/h. The condensate system in the ABWR uses hollow-fiber filled filters which require half the maintenance of a typical system. In addition, with the plant incorporating Fe control in the Feedwater System and a significant reduction in cobalt bearing materials, the overall effective dose rate is estimated at half the above value.

(4) Other work in the Turbine Building typically takes 13,140 hours per year at an effective dose rate of 1 μGy/h. Only minor changes can be assumed with the ABWR with some remote operations and slight reductions in operating exposures. For the ABWR, it is estimated that a 10% reduction can be realized with improving technology with no significant change in dose rate.

12.4.5 Work at Power

Work at power typically requires 5,000 hours per year at an effective dose rate of 66 μGy/h for the BWR. This category covers literally all aspects of plant maintenance performed during normal operations from health physics coverage to surveillance, to minor equipment

adjustment, and minor equipment repair. Overall, the ABWR has been designed to use more automatic and remote equipment. It is expected that items of routine monitoring will be performed by camera or additional instrumentation. Most equipment in the ABWR is palatalized, which permits quick and easy replacement and removal for decontamination and repair. Therefore, a reduction in actual hours needed at power is estimated at 1,000 hours less than the typical value. In the area of effective dose rate, the ABWR is expected to have significantly lower general radiation levels over current plants, owing to more stringent water chemistry controls, a full flow condensate flow system, a 2% cleanup water program, titanium condenser tubes, Fe feedwater control, and low cobalt usage. In addition, the ABWR has in the basic design, compartmentalized all major pieces of equipment so that any piece of equipment can be maintained or removed for maintenance without affecting normal plant operations. This design concept thereby reduces radiation exposure to personnel maintaining or testing one piece of equipment from both shine and airborne contamination from other equipment. Finally, the ABWR has incorporated in the basic design the use of hydrogen water chemistry (HWC) and the additional shielding necessary to protect from the factor of six increase in N-16 shine produced through the steamlines into the Turbine Building. For normally occupied areas, sufficient shielding is provided to protect from N-16 shine. In areas which may be occupied temporarily for specific maintenance or surveillance tasks and where additional shielding is not appropriate (for the surveillance function) or deemed reasonable, the HWC injection can be stopped causing the N-16 shine to decrease to within normal operating BWR limits within 90 seconds and thus permitting those actions needed. Overall, it is estimated that the effective dose rate for work at power will be slightly over two thirds the typical rate or 40 μGy/h.

12.4.6 References

12.4-1 P.D. Knecht, BWR/6 “Drywell and Containment Maintenance and Testing Access Time Estimates”, GE Report NEDE-23819, May 1978.

12.4-2 P.D. Knecht, “Maintenance Access Time Estimates, BWR/6 Radwaste Building”, GE Report NEDE-23996-2, May 1979.

12.4-3 P.D. Knecht, “Maintenance Access Time Estimates”, BWR/6 Auxiliary and Fuel Buildings, GE Report NEDE-23996-1, May 1979.

12.4-4 “Study of Advanced BWR Features, Plant Definition/Feasibility Results”, Volume III, Appendix Part G, GE NEDE-24679, October 1979 (Proprietary).

Table 12.4-38 Projected Annual Radiation Exposure

Operation Task	Tier 2 Section	hours per year	µGy/h	person-mSv/yr
Drywell				
MSIV	12.4.1(1)	~4,200	15	63
SRV, RIP, etc	12.4.1(2)	1,150	75	86
FMCRD	12.4.1(3)	370	65	24
LPRM/TIP	12.4.1(4)	200	500	100
ISI	12.4.1(5)	1,200	55	66
Other	12.4.1(6)	3,500	35	123
Total		10,620		462
Reactor Building				
Vessel	12.4.2(1)	1,200	15	18
Refueling	12.4.2(2)	2,000	2	4
RHR/CUW	12.4.2(3)	400	54	22
FMCRD	12.4.2(4)	120	45	5
Instrument	12.4.2(5)	1,000	30	30
Other	12.4.2(6)	4,400	15	66
Total		9,120		145
Radwaste Building	12.4.3	4,200	25	105
Turbine Building				
Valve Maintenance	12.4.4(1)	1,000	39	39
Turbine Overhaul	12.4.4(2)	15,500	2	31
Condensate	12.4.4(3)	1,000	35	35
Other	12.4.4(4)	11,800	1	12
Total		29,300		117
Work at Power	12.4.5	4,000	40	160
Totals		57,240		989

12.5 Health Physics Program

12.5.1 Operational Considerations

Out of ABWR Standard Plant Scope. See Subsection 12.5.3.1 for COL license information

12.5.2 In-Plant and Airborne Radioactivity Monitoring

The portable instrumentation is out of ABWR standard plant scope. See Subsection 12.5.3.2 for COL license information. The non-portable airborne radiation monitoring equipment is described in Subsection 12.3.4.

12.5.3 COL License Information

12.5.3.1 Radiation Protection Program

COL applicants will provide, to the level of detail required by Regulatory Guide 1.70, the implementation of a radiation protection program for operational considerations (Subsection 12.5.1).

12.5.3.2 Compliance with Paragraph 50.34 (f) (xxvii) of 10CFR50 and NUREG-0737 Item III.D.3.3

COL applicants will provide the portable instruments in operating reactors that accurately measure radio-iodine concentrations in plant areas under accident conditions and will provide training and procedures on the use of these instruments in compliance with Paragraph 50.34 (f) (xxvii) of 10CFR50 and NUREG-0737 Item III.D.3.3 (Subsection 12.5.2).

12A Appendix 12A Calculation of Airborne Radionuclides

12A.1 Calculation of Airborne Radionuclides

This appendix presents a simplified methodology to calculate the airborne concentrations of radionuclides in a compartment. This methodology is conservative in nature and assumes that diffusion and mixing in a compartment is basically instantaneous with respect to those mitigating mechanisms such as radioactive decay and other removal mechanisms. The following calculations need to be performed on an isotope-by-isotope basis to verify that airborne concentrations are within the limits of 10CFR20:

(1) For the compartment, all sources of airborne radionuclides need to be identified such as:

(a) Flow of contaminated air from other areas

(b) Gaseous releases from equipment in the compartment

(c) Evolution of airborne sources from sumps or water leaking from equipment

(2) Second, the primary sinks of airborne radionuclides need to be identified. This will primarily be outflow from the compartment but may also take the form of condensation onto room coolers.

(3) Given the above information the following equation will calculate a conservative concentration.

$$C_i = \frac{1}{V}\sum_j \frac{S_{ij}}{\left(\lambda_i + \sum_k R_{ijk}\right)}$$

Where:

C_i = Concentration of the ith radionuclides in the room

V = Volume of room

S_{ij} = The jth source (rate) of the ith radionuclide to the room. These sources are discussed below.

R_{ijk} = The kth removal constant for the jth source and the ith radionuclide as discussed below.

λ_i = Radionuclide decay constant

Evaluation Parameters

The following parameters require evaluation on a case-by-case basis dictated by the physical parameters and processes germane to the modeling process:

(1) S_{ij} is defined as the source rate for radionuclide i into the compartment. Typically, these sources take the form of:

(a) Inflow of contaminated air from an upstream compartment. Given the concentration of radionuclide i, c_i, in this air and a flow rate of "r", the source rate then becomes $S_{ij} = rc_i$.

(b) Production of airborne radionuclides from equipment. This typically takes two forms, gaseous leakage and liquid leakage.

(i) For gaseous leakage sources, the source rate is equal to the concentration of radionuclide i, c_i, and the leakage rate, "r", or $S_{ij} = rc_i$.

(ii) For liquid sources, the source rate is similar but more complex. Given a liquid concentration c_i and a leakage rate, "r", the total release from the leak is rc_i. The fraction of this release which then becomes airborne is typically evaluated by a partition factor, P_f which may be conservatively estimated from:

Noble Gases

$$P_f = 1$$

All others

$$P_f = \frac{h_t - h_f}{h_s - h_f}$$

where:

h_t =Saturated liquid enthalpy

h_f=Saturated liquid enthalpy at one atmosphere = 419 J/g

h_s =Saturated vapor enthalpy at one atmosphere = 2676 J/g

Therefore, the liquid release rate becomes, rc_iP_f.

(2) R_{ijk} is defined as the removal rate constant and typically consists of:

(a) Exhaust rate from the compartment. This term considers not only the exhaust of any initially contaminated air, but also any clean air which may be used to dilute the compartment air.

(b) Compartment filter systems are treated by the equation:

$$R_{ijk} = (1 - F_i) * r_i$$

where

r_i = Filter system flow rate

F_i =Filter efficiency for radionuclide i

(c) Other removal factors on a case-by-case basis which may be deemed reasonable and conservative.

Example Calculation

(Values used below are examples only and should not be used in any actual evaluation.) This example will look at I-131 in a compartment $6.1 \times 6.1 \times 7.6 = 282.80 m^3 = V$. First, all primary sources of radionuclides need to be identified and categorized.

(1) Flow into the compartment equals 424.8 m^3/h with the input I-131 concentration equal to 7.4 x 10^{-3} Bq/L (from upstream compartments) or 0.888 Bq/s. No other sources of air either contaminated or clean air are assumed.

(2) The compartment contains a pump carrying reactor coolant with a maximum specified leakage rate of 0.000034 m^3/h at 287.8°C.

(a) Conservatively it can be estimated based upon properties from steam tables (Note 1) that under these conditions 44% of the liquid will flash to steam and become airborne. Along with the flashing liquid, it is assumed that a proportional amount of I-131 will become airborne; therefore, $P_f = 0.44$.

(b) Using the design basis iodine concentrations for reactor water from Table 11.1-2 of 598 Bq/g of I-131, it is calculated that the pump is providing a source of I-131 of 1.85 Bq/s to the air (Note 2).

Second, the sinks for airborne material need to be identified. This example includes only exhaust which is categorized as flow out of the compartment at 150% per hour or 4.2×10^{-4} per second.

Therefore, for an equilibrium situation, the I-131 airborne concentration from this liquid source would be calculated from the following equation:

$$C = \frac{1}{v}\left(S_1/(\lambda + R_1) + S_2/(\lambda + R_2)\right)$$

where

V = Volume of compartment = 282.8 m^3

S_1 = Source rate in Curies per second = 1.85 Bq/s from liquid

S_2 = Source rate from inflow = 0.888 Bq/s

λ = Isotope decay constant in units per second = 9.977×10^{-7}/s

R_1 = R_2 = removal rate constant per second (exfiltration) = 4.2×10^{-4} per second

The result is

C = 2.3×10^{-4} Bq/L of I-131.

NOTE:

(1) The assumption of 44% flashing at 287.8°C is extremely conservative; see Reference 12A-1 for a discussion of fission product transport.

(2) Water density assumed at 0.743 g/cm^3 based upon standard tables for water at 287.8°C.

12A.2References

12A-1 Paquette, et al, "Volatility of Fission Products During Reactor Accidents", Journal of Nuclear Materials, Vol 130 Pg 129–138, 1985.