HITACHI

GE Hitachi Nuclear Energy

25A5675AH
Revision 5
November 2010

ABWR
Design Control Document
Tier 2

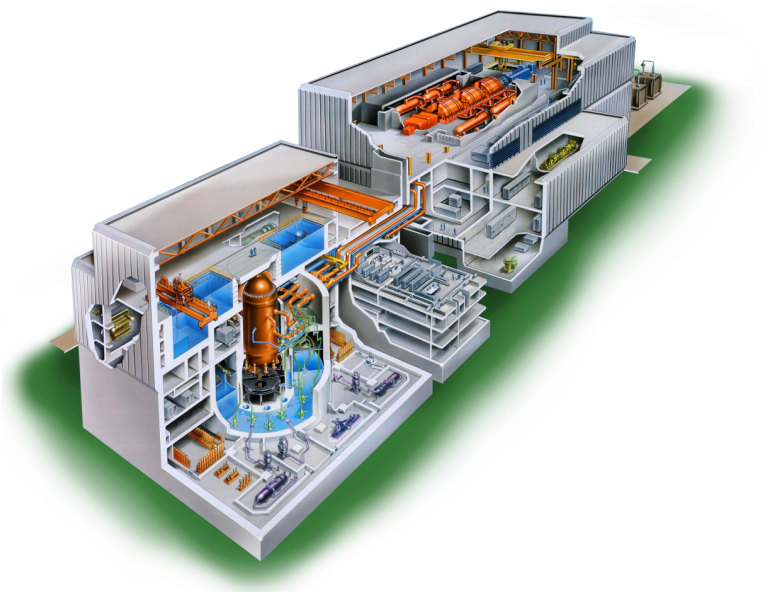

Chapter 6

Engineered Safety Features

Copyright 1994, 2010, GE-Hitachi Nuclear Energy Americas LLC
All Rights Reserved

Chapter 6
Table of Contents

6.0 Engineered Safety Features 6.0-1

6.0 General 6.0-1

6.1 Engineered Safety Feature Materials 6.1-1
6.1.1 Metallic Materials 6.1-1
6.1.2 Organic Materials 6.1-3
6.1.3 COL License Information 6.1-4

6.2 Containment Systems 6.2-1
6.2.1 Containment Functional Design 6.2-1
6.2.2 Containment Heat Removal System 6.2-44
6.2.3 Secondary Containment Functional Design 6.2-48
6.2.4 Containment Isolation System 6.2-60
6.2.5 Combustible Gas Control in Containment 6.2-73
6.2.6 Containment Leakage Testing 6.2-93
6.2.7 COL License Information 6.2-101
6.2.8 References 6.2-102

6.3 Emergency Core Cooling Systems 6.3-1
6.3.1 Design Bases and Summary Description 6.3-1
6.3.2 System Design 6.3-5
6.3.3 ECCS Performance Evaluation 6.3-12
6.3.4 Tests and Inspections 6.3-20
6.3.5 Instrumentation Requirements 6.3-22
6.3.6 COL License Information 6.3-23
6.3.7 Reference 6.3-23

6.4 Habitability Systems 6.4-1
6.4.1 Design Basis 6.4-2
6.4.2 System Design 6.4-4
6.4.3 System Operation Procedures 6.4-7
6.4.4 Design Evaluations 6.4-8
6.4.5 Testing and Inspection 6.4-9
6.4.6 Instrumentation Requirements 6.4-10
6.4.7 COL License Information 6.4-10

6.5 Fission Products Removal and Control Systems 6.5-6
6.5.1 Engineered Safety Features Filter Systems 6.5-6
6.5.2 Containment Spray Systems 6.5-16
6.5.3 Fission Product Control Systems 6.5-16
6.5.4 Not Used 6.5-17
6.5.5 COL License Information 6.5-17
6.5.6 References 6.5-17

6.6 Preservice and Inservice Inspection and Testing of Class 2 and 3 Components and Piping 6.6-1
6.6.1 Class 2 and 3 System Boundaries 6.6-1
6.6.2 Accessibility 6.6-3
6.6.3 Examination Categories and Methods 6.6-5

Table of Contents (Continued)

6.6.4 Inspection Intervals 6.6-7
6.6.5 Evaluation of Examination Results 6.6-7
6.6.6 System Pressure Tests 6.6-7
6.6.7 Augmented Inservice Inspection 6.6-8
6.6.8 Code Exemptions 6.6-9
6.6.9 COL License Information 6.6-9

6.7 High Pressure Nitrogen Gas Supply System 6.7-1
6.7.1 Functions 6.7-1
6.7.2 System Description 6.7-1
6.7.3 System Evaluation 6.7-2
6.7.4 Inspection and Testing Requirements 6.7-3
6.7.5 Instrumentation Requirements 6.7-3
6.7.6 Analysis and Testing of ADS Accumulator Capacity 6.7-3

6A Regulatory Guide 1.52, Section C, Compliance Assessment 6A-1

6.B SRP 6.5.1, Table 6.5.1-1 Compliance Assessment 6B-1

6.C Containment Debris Protection for ECCS Strainers 6C-1
6C.1 Background 6C-1
6C.2 ABWR Mitigating Features 6C-1
6C.3 RG 1.82 Improvement 6C-2
6C.4 Discussion Summary 6C-3
6C.5 Strainer Sizing Analysis Summary 6C-4

6.D HPCF Analysis Outlines 6D-9
6D.1 Introduction 6D-9
6D.2 Outline for Injection Flow Confirmation 6D-9

6E Additional Bypass Leakage Considerations 6E-1
6E.1 Bypass Mechanism through ACS Interconnection 6E-1
6E.2 Other Bypass Pathways 6E-1
6E.3 Effect on Existing Bypass Analyses 6E-1
6E.3.1 Estimate of Effective Bypass Leakage Area (A/√ K) 6E-1
6E.3.2 Duration of Bypass Flow 6E-2
6E.3.3 Effect on Existing Bypass Analyses 6E-2
6E.4 Conclusion 6E-3

Chapter 6
List of Tables

Table 6.1-1 Engineered Safety Features Component Materials 6.1-5

Table 6.2-1 Containment Parameters 6.2-103

Table 6.2-2 Containment Design Parameters 6.2-104

Table 6.2-2a Engineered Safety Systems Information for Containment Response Analyses 6.2-105

Table 6.2-2b Net Positive Suction Head (NPSH) Available to RHR Pumps 6.2-106

Table 6.2-2c Net Positive Suction Head (NPSH) Available to HPCF Pumps 6.2-107

Table 6.2-2d Secondary Containment Design and Performance Data 6.2-108

Table 6.2-3 Subcompartment Nodal Description 6.2-111

Table 6.2-4 Subcompartment Vent Path Description 6.2-113

Table 6.2-4a Flow Loss Factor 6.2-115

Table 6.2-4b Mass and Energy Release Rate 6.2-117

Table 6.2-5 Reactor Coolant Pressure Boundary (RCPB) Influent Lines Penetrating Drywell ... 6.2-122

Table 6.2-6 Reactor Coolant Pressure Boundary (RCPB) Effluent Lines Penetrating Drywell .. 6.2-122

Table 6.2-7 Containment Isolation Valve Information 6.2-123

Table 6.2-9 Primary Containment Penetration List* 6.2-171

Table 6.2-9 Secondary Containment Penetration List 6.2-181

Table 6.2-10 Potential Bypass Leakage Paths 6.2-183

Table 6.3-1 Significant Input Variables Used in the Loss-of-Coolant Accident Analysis 6.3-24

Table 6.3-2 Operational Sequence of Emergency Core Cooling System Maximum Core Flooder Line Break 6.3-26

Table 6.3-3 Single Failure Evaluation 6.3-27

Table 6.3-4 Summary of Results of LOCA Analysis 6.3-28

Table 6.3-5 Key to Figures 6.3-29

Table 6.3-7 MAPLHGR Versus Exposure 6.3-31

Table 6.3-8 Design Parameters for HPCF System Components 6.3-32

Table 6.3-9 Design Parameters for RHR System Components 6.3-34

List of Tables (Continued)

Table 6.3-10 Single Failure Evaluation With One HPCF Subsystem Out of Service 6.3-39

Table 6.3-11 Single Failure Evaluation With One RHR/LPFL Subsystem Out of Service 6.3-40

Table 6.3-12 Single Failure Evaluation With ECCS Division A Out of Service 6.3-41

Table 6.3-13 Single Failure Evaluation With ECCS Division B Out of Service 6.3-42

Table 6.3-14 Single Failure Evaluation With ECCS Division C Out of Service 6.3-43

Table 6.3-15 Single Failure Evaluation With Two ADS Valves Out of Service 6.3-44

Table 6.4-1 Identification of Failure/Effect in the Control Room Habitability Area HVAC System 6.4-11

Table 6.4-2 Control Room Habitability Area HVAC System Failure Analysis 6.4-12

Table 6.5-1 Summary of Major Standby Gas Treatment System Components 6.5-18

Table 6.5-2 Source Terms Used for SGTS Charcoal Adsorber Design 6.5-20

Table 6.6-1 Examination Categories and Methods 6.6-10

Table 6.6-1 Examination Categories and Methods (Continued) 6.6-30

Table 6.6-1 Examination Categories and Methods (Continued) 6.6-48

Table 6.6-1 Examination Categories and Methods (Continued) 6.6-49

Table 6.7-1 Nitrogen Gas Demand 6.7-5

Table 6C-1 Debris Analysis Input Parameters 6C-5

Table 6C-2 Results of Analysis 6C-5

Chapter 6
List of Figures

Figure 6.2-1 A Break in a Feedwater Line 6.2-191

Figure 6.2-2 Feedwater Line Break—RPV Side Break Area 6.2-192

Figure 6.2-3 Feedwater Line Break Flow—Feedwater System Side of Break....6.2-193

Figure 6.2-4 Feedwater Line Break Flow Enthalpy—Feedwater System Side of Break 6.2-194

Figure 6.2-5 Lower Drywell Air Transfer Percentage for Model Assumption Versus Actual Case 6.2-195

Figure 6.2-6 Pressure Response of the Primary Containment for Feedwater Line Break 6.2-196

Figure 6.2-7 Temperature Response of the Primary Containment for Feedwater Line Break ...6.2-197

Figure 6.2-8 Temperature Time History After a Feedwater Line Break 6.2-198

Figure 6.2-8a Pressure Time History After a Feedwater Line Break 6.2-199

Figure 6.2-9 ABWR Main Steamlines with a Break 6.2-200

Figure 6.2-10 MSLB Area as a Function of Time 6.2-201

Figure 6.2-11 Feedwater Specific Enthalpy as a Function of Integrated Feedwater Flow Mass .6.2-202

Figure 6.2-12 Pressure Time History for MSLB with Two-Phase Blowdown Starting at 2 Seconds..... 6.2-203

Figure 6.2-13 Temperature Time History for MSLB with Two-Phase Blowdown Starting at two Seconds.6.2-204

Figure 6.2-14 Pressure Time History for Long-term MSLB 6.2-205

Figure 6.2-15 Temperature Time History for Long-term MSLB 6.2-206

Figure 6.2-16 General Pressure Trends in the Containment During a Post-LOCA Depressurization Transient....6.2-207

Figure 6.2-17 Differential Pressures in Wetwell and Drywell Relative to Reactor Building for Vacuum Breaker Size of .82 m^2....6.2-208

Figure 6.2-18 Differential Pressures in Wetwell and Drywell Relative to Reactor Building with Wetwell Spray for Vacuum Breaker Size of .82 m^2 ....6.2-209

Figure 6.2-19 Temperature and Pressure Time Histories in the Containment During Stuck Open Relief Valve Transient....6.2-210

Figure 6.2-21 Not Used....6.2-212

Figure 6.2-22 Break Flow Rate and Specific Enthalpy for the Feedwater Line Break Flow Coming from the Feedwater System Side....6.2-213

List of Figures (Continued)

Figure 6.2-23 Break Flow Rate and Specific Enthalpy for the Feedwater Line Break Flow Coming from the RPV Side 6.2-214

Figure 6.2-24 Break Flow Rate and Specific Enthalpy for the Main Steamline Break with Two-Phase Blowdown Starting When the Collapsed Water Level Reaches the Steam Nozzle 6.2-215

Figure 6.2-25 Not Used 6.2-216

Figure 6.2-26 ABWR Containment Boundary Nomenclature 6.2-217

Figure 6.2-27 Three Basic Types of Leakage Paths 6.2-218

Figure 6.2-37a Secondary Containment Schematic Flow Diagram (ECCS/RCIC) 6.2-220

Figure 6.2-37b Secondary Containment Schematic Flow Diagram (Main Steam/Feedwater) 6.2-221

Figure 6.2-37c Secondary Containment Schematic Flow Diagram (CUW) 6.2-222

Figure 6.2-37d Secondary Containment Schematic Flow Diagram (CUW) (Continued) 6.2-223

Figure 6.2-37e Secondary Containment Schematic Flow Diagram (CUW) (Continued) 6.2-224

Figure 6.2-37f Secondary Containment Schematic Flow Diagram (CUW) (Continued) 6.2-225

Figure 6.2-37g Secondary Containment Schematic Flow Diagram (CUW) (Continued) 6.2-226

Figure 6.2-37h Secondary Containment Flow Schematic Diagram (CUW) (Continued) 6.2-227

Figure 6.2-37i Pressure Transient Due to High Energy Line Break in RCIC Compartments-Isolated Cases 6.2-228

Figure 6.2-37j Temperature Transient Response Due to High Energy Line Break in RCIC Compartments 6.2-229

Figure 6.2-37k Pressure Transient Due to High Energy Line Breaks in CUW Compartments 6.2-230

Figure 6.2-37l Temperature Transient Due to High Energy Line Breaks in CUW Compartments 6.2-231

Figure 6.2-37m Pressure Transient Due to High Energy Line Break in Steam Tunnel Compartments 6.2-232

Figure 6.2-37n Temperature Transient Due to High Energy Line Break in Steam Tunnel Compartments 6.2-233

Figure 6.2-37o Compartment Temperature Response Due to High Energy Line Break in CUW Rooms 6.2-234

Figure 6.2-37p Compartment Transient Temperature Response Due to High Energy Line Break in CUW-Unisolated Case 6.2-235

List of Figures (Continued)

Figure 6.2-41 Hydrogen and Oxygen Concentrations in Containment After Design Basis LOCA 6.2-237

Figure 6.2-42 Allowable Steam Bypass Leakage Capacity 6.2-238

Figure 6.2-43 Typical Pressure Fluctuation Due to CO (See Figure 3B-22) 6.2-239

Figure 6.2-44 Typical Pressure Fluctuation Due To CH (See Figure 3B-24) 6.2-240

Figure 6.2-45 Quencher Bubble Pressure Time History 6.2-241

Figure 6.3-5 Pressure Versus Reactor Core Isolation Cooling Flow Used in LOCA Analysis 6.3-36

Figure 6.3-6 Pressure Versus Low Pressure Flooder Flow (Per System) Used in LOCA Analysis 6.3-37

Figure 6.3-4 Pressure Versus High Pressure Core Flooder Flow (Per System) Used in LOCA Analysis 6.3-46

Figure 6.3-5 Pressure Versus Reactor Core Isolation Cooling Flow Used in LOCA Analysis 6.3-47

Figure 6.3-6 Pressure Versus Low Pressure Flooder Flow (Per System) Used in LOCA Analysis 6.3-48

Figure 6.3-10 [Proprietary information not included in DCD (Refer to SSAR Section 6.3, Amendment 34)] 6.3-50

Figure 6.3-11 [Proprietary information not included in DCD (Refer to SSAR Section 6.3, Amendment 34)] 6.3-51

Figure 6.3-12 [Proprietary information not included in DCD (Refer to SSAR Section 6.3, Amendment 34)] 6.3-52

Figure 6.3-14 [Proprietary information not included in DCD (Refer to SSAR Section 6.3, Amendment 34)] 6.3-53

Figure 6.3-16 [Proprietary information not included in DCD (Refer to SSAR Section 6.3, Amendment 34)] 6.3-54

Figure 6.3-18 [Proprietary information not included in DCD (Refer to SSAR Section 6.3, Amendment 34)] 6.3-55

Figure 6.3-20 [Proprietary information not included in DCD (Refer to SSAR Section 6.3, Amendment 34)] 6.3-56

Figure 6.3-22 [Proprietary information not included in DCD (Refer to SSAR Section 6.3, Amendment 34)] 6.3-57

Figure 6.3-24 [Proprietary information not included in DCD (Refer to SSAR Section 6.3, Amendment 34)] 6.3-58

List of Figures (Continued)

Figure 6.3-26 [Proprietary information not included in DCD (Refer to SSAR Section 6.3, Amendment 34)] 6.3-59

Figure 6.3-28 [Proprietary information not included in DCD (Refer to SSAR Section 6.3, Amendment 34)] 6.3-60

Figure 6.3-30 [Proprietary information not included in DCD (Refer to SSAR Section 6.3, Amendment 34)] 6.3-61

Figure 6.3-32 [Proprietary information not included in DCD (Refer to SSAR Section 6.3, Amendment 34)] 6.3-62

Figure 6.3-34 [Proprietary information not included in DCD (Refer to SSAR Section 6.3, Amendment 34)] 6.3-63

Figure 6.3-36 [Proprietary information not included in DCD (Refer to SSAR Section 6.3, Amendment 34)] 6.3-64

Figure 6.3-38 [Proprietary information not included in DCD (Refer to SSAR Section 6.3, Amendment 34)] 6.3-65

Figure 6.3-40 [Proprietary information not included in DCD (Refer to SSAR Section 6.3, Amendment 34)] 6.3-66

Figure 6.3-42 [Proprietary information not included in DCD (Refer to SSAR Section 6.3, Amendment 34)] 6.3-67

Figure 6.3-44 [Proprietary information not included in DCD (Refer to SSAR Section 6.3, Amendment 34)] 6.3-68

Figure 6.3-46 [Proprietary information not included in DCD (Refer to SSAR Section 6.3, Amendment 34)] 6.3-69

Figure 6.3-48 [Proprietary information not included in DCD (Refer to SSAR Section 6.3, Amendment 34)] 6.3-70

Figure 6.3-50 [Proprietary information not included in DCD (Refer to SSAR Section 6.3, Amendment 34)] 6.3-71

Figure 6.3-52 [Proprietary information not included in DCD (Refer to SSAR Section 6.3, Amendment 34)] 6.3-72

Figure 6.3-54 [Proprietary information not included in DCD (Refer to SSAR Section 6.3, Amendment 34)] 6.3-73

Figure 6.3-56 [Proprietary information not included in DCD (Refer to SSAR Section 6.3, Amendment 34)] 6.3-74

Figure 6.3-58 [Proprietary information not included in DCD (Refer to SSAR Section 6.3, Amendment 34)] 6.3-75

List of Figures (Continued)

Figure 6.3-60 [Proprietary information not included in DCD (Refer to SSAR Section 6.3, Amendment 34)] 6.3-76

Figure 6.3-62 [Proprietary information not included in DCD (Refer to SSAR Section 6.3, Amendment 34)] 6.3-77

Figure 6.3-64 [Proprietary information not included in DCD (Refer to SSAR Section 6.3, Amendment 34)] 6.3-78

Figure 6.3-66 [Proprietary information not included in DCD (Refer to SSAR Section 6.3, Amendment 34)] 6.3-79

Figure 6.3-68 [Proprietary information not included in DCD (Refer to SSAR Section 6.3, Amendment 34)] 6.3-80

Figure 6.9-70 [Proprietary information not included in DCD (Refer to SSAR Section 6.3, Amendment 34)] 6.3-81

Figure 6.3-72 [Proprietary information not included in DCD (Refer to SSAR Section 6.3, Amendment 34)] 6.3-82

Figure 6.3-74 [Proprietary information not included in DCD (Refer to SSAR Section 6.3, Amendment 34)] 6.3-83

Figure 6.3-76 [Proprietary information not included in DCD (Refer to SSAR Section 6.3, Amendment 34)] 6.3-84

Figure 6.3-77 [Proprietary information not included in DCD (Refer to SSARSection 6.3, Amendment 34)] 6.3-85

Figure 6.3-78 [Proprietary information not included in DCD (Refer to SSARSection 6.3, Amendment 34)] 6.3-86

Figure 6.3-79 [Proprietary information not included in DCD (Refer to SSAR Section 6.3, Amendment 34)] 6.3-87

Figure 6.4-1 Plant Layout 6.4-13

Figure 6.5-2 Secondary Containment Pressure Transient After Design Basis LOCA 6.5-22

Figure 6D-1 Injection Flow 6D-11

6.0 Engineered Safety Features

6.0 General

The engineered safety features of this plant are those systems provided to mitigate the consequences of postulated serious accidents. The features can be divided into three general groups: (1) containment systems (2) emergency core cooling systems and (3) habitability systems. The systems in each general group are:

(1) Containment Systems

- (a) Primary Containment
- (b) Containment Heat Removal
- (c) Containment Isolation System
- (d) Combustible Gas Control
- (e) Secondary Containment
- (f) Standby Gas Treatment System

(2) Emergency Core Cooling System

- (a) High Pressure Core Flooder (HPCF)
- (b) Automatic Depressurization System (ADS)
- (c) Low Pressure Flooder (LPFL) Mode of the RHR System
- (d) Reactor Core Isolation Cooling (RCIC) System

(3) Control Room Habitability Systems

6.1 Engineered Safety Feature Materials

Materials used in the engineered safety feature (ESF) components have been evaluated to ensure that material interactions do not occur that can potentially impair operation of the ESF. Materials have been selected to withstand the environmental conditions encountered during normal operation and any postulated loss-of-coolant-accident (LOCA). Their compatibility with core and containment spray solutions has been considered, and the effects of radiolytic decomposition products have been evaluated.

Coatings used on exterior surfaces within the primary containment are suitable for the environmental conditions expected. Only metallic insulation is used inside the containment, except for duct and antisweat insulation. All nonmetallic thermal insulation employed is required to have the proper ratio of sodium silicate to leachable chloride plus fluoride ions (Regulatory Guide 1.36), in order to minimize the possible contribution to stress corrosion cracking of austenitic stainless steel.

6.1.1 Metallic Materials

6.1.1.1 Materials Selection and Fabrication

6.1.1.1.1 Material Specifications

Table 5.2-4 lists the principal pressure-retaining materials and the appropriate materials specifications for the reactor coolant pressure boundary (RCPB) components. Table 6.1-1 lists the principal pressure-retaining materials and the appropriate material specifications of the primary containment system, the Emergency Core Cooling System (ECCS) and their auxiliary systems and the Standby Liquid Control System (SLCS). The ESF materials selected satisfy Appendix I to Section III of the ASME Code and Parts A, B, and C of Section II of the Code.

6.1.1.1.2 Compatibility of Construction Materials with Core Cooling Water and Containment Sprays

All construction materials used in the essential portions of these systems are corrosion-resistant, both in the medium contained and the external environment. General corrosion of all materials, except carbon and low-alloy steel, is negligible. Conservative corrosion allowances are provided for all exposed surfaces of carbon and low-alloy steel. Special allowances are made for the SLCS, which contains sodium pentaborate solution.

Demineralized water, with no additives, is employed in BWR core cooling water and containment sprays (See Subsections 9.2.6 and 9.2.9 for a description of the water quality requirements). Leaching of chlorides from concrete and other substances is not significant. No detrimental effects occur on any of the ESF construction materials from allowable containment levels in the high-purity water. Thus, the materials are compatible with the post-LOCA environment.

6.1.1.1.3 Controls for Austenitic Stainless Steel

6.1.1.1.3.1 Control of the Use of Sensitized Stainless Steel

Controls to avoid severe sensitization are discussed in Subsection 5.2.3.4.1.1.

6.1.1.1.3.2 Process Controls to Minimize Exposure to Contaminants

Process controls for austenitic stainless steel are discussed in Subsection 5.2.3.4.1.2.

6.1.1.1.3.3 Use of Cold Worked Austenitic Stainless Steel

Austenitic stainless steels (300 series) are generally used in the solution heat treated condition. During bending and fabrication, the bend radius, the material hardness, and the surface finish of ground surfaces are controlled. Where the controls are not met, the material is required to be re-solution heat treated.

6.1.1.1.3.4 Thermal Insulation Requirements

Thermal insulation materials used on ESF systems shall be selected, procured, tested and stored in accordance with Regulatory Guides 1.36 and 1.82. Nonmetallic thermal insulation materials are required to have the proper ratio of leachable sodium plus silicate ions to leachable chloride plus fluoride ions as specified in Regulatory Guide 1.36. Insulation shall be tested to confirm that insulation debris resulting from a LOCA will not prevent the operation of the core cooling water and containment spray systems as specified in Regulatory Guide 1.82.

6.1.1.1.3.5 Avoidance of Hot Cracking of Stainless Steel

Process controls to avoid hot cracking are discussed in Subsection 5.2.3.4.2.1.

6.1.1.1.3.6 Not Used

6.1.1.2 Composition, Compatibility and Stability of Containment and Core Coolants

Demineralized water from the condensate storage tank or the suppression pool, with no additives, is employed in the core cooling water and containment sprays. One exception is that the sodium pentaborate liquid control solution, if used, enters through the core flooder system.

The post-LOCA ESF coolant, which is high-purity water, comes from one of two sources. Water in the 304L stainless steel-lined suppression pool is maintained at high purity (low corrosion attack) by the Suppression Pool Cleanup (SPCU) System (Subsection 9.5.9). Since the pH range (5.3 - 8.6) is maintained, corrosive attack on the pool liner (304L SS) will be insignificant over the life of the plant. ESF coolant may also be obtained from the condensate storage tank, if available (Subsection 9.2.6).

Because of the methods described above (coolant storage provisions, insulation materials requirements, and the like), as well as the fact that the containment has no significant stored quantities of acidic or basic materials, the post-LOCA aqueous phase pH in all areas of

containment will have a flat time history. In other words, the liquid coolant will remain at its design basis pH throughout the event.

6.1.2 Organic Materials

6.1.2.1 Protective Coatings

The use of organic protective coatings within the containment has been kept to a minimum. The major use of such coatings is on the carbon steel containment liner, internal steel structures, and equipment inside the drywell and wetwell.

The epoxy coatings are specified to meet the requirements of Regulatory Guide 1.54 and are qualified using the standard ANSI tests, including ANSI N101.2. However, because of the impracticability of using these special coatings on all equipment, certain exemptions (e.g., electronic/electrical trim, covers, face plates and valve handles) are allowed. The exemptions are restricted to small-size equipment where, in case of a LOCA, the paint debris is not a safety hazard. Other than these minor exemptions, all coatings within the containment are qualified to Regulatory Guide 1.54. See Subsection 6.1.3.1 for COL license information.

6.1.2.2 Other Organic Materials

Materials used in or on the ESF equipment have been reviewed and evaluated in respect to radiolytic and pyrolytic decomposition and attendant effects on safe operation of the system. For example, fluorocarbon plastic (Teflon) is not permitted in environments that attain temperatures greater than 148.8°C, or radiation exposures above 100 gray. The 10 reactor internal pump motors each contain less than 4.54 kg of polyacrylic and polyethylene motor winding insulation. This material has a design life of 20 years in the environment of less than $6x10^5$ gray at 60°C maximum.

Other organic materials in the containment are qualified to environmental conditions in the containment. See Subsection 6.1.3.1 for COL license information.

6.1.2.3 Safety Analysis

For each application the materials have been specified to withstand an appropriate radiation dose for their design life, without suffering any significant radiation-induced damage. The specified integrated radiation doses are consistent with those listed in Section 3.11. The various suppliers have indicated their compliance with these requirements.

In addition, since the containment post-accident environment consists of hot water, air and steam, no significant chemical degradation of these materials is expected because of strict applications of inspection and testing. No significant amount of solid debris is expected to be generated from these materials.

6.1.3 COL License Information

6.1.3.1 Protective Coatings and Organic Materials

The COL applicant shall:

(1) Indicate the total amount of protective coatings and organic materials used inside the containment that do not meet the requirements of ANSI N101.2 and Regulatory Guide 1.54.

(2) Evaluate the generation rate as a function of time of combustible gases that can be formed from organic materials under DBA conditions.

(3) Provide the technical basis and assumptions used for this evaluation (Subsection 6.1.2.1 and 6.1.2.2).

Table 6.1-1 Engineered Safety Features Component Materials*

Component	Form	Material	Specification (ASTM/ASME)
RHR Heat Exchanger			
Shell, Head and Channel	Plate	Carbon Steel	SA-516 Gr 70
Tube Sheet	Plate	Carbon Steel	SA-516 Gr 70
Nozzles and Flanges	Forging	Carbon Steel	SA-350 Gr LF2
Tubes	Tube	Stainless Steel	SA-249 Type 304L
Nuts and Bolts	Bar	Low Alloy Steel	SA-194 Gr 7, SA-193 Gr B7
ECCS Pumps			
Bowl Assembly	Casting	Carbon Steel	SA-352 Gr LCB
Discharge Head Shell/Cover	Plate/Forging	Carbon Steel	SA-516 Gr 70/SA-350 Gr LF2
Suction Barrel Shell & Disked Head	Plate	Carbon Steel	SA-516 Gr 70
Flanges	Forging	Carbon Steel	SA-350 Gr LF2
Pipe	Pipe	Carbon Steel	SA-333 Gr 6
Shaft	Bar	Stainless Steel	SA-479 Type 410 (Q&T or N&T)
Impellers	Casting	Stainless Steel	SA-487 Gr CA6NM
Studs & Nuts	Bar	Low Alloy Steel	SA-193 Gr B7/SA-194 Gr 7
RHR			
A—High and Low Pressure Primary Piping (Class 1 or 2)			
Piping	Seamless Pipe Welded Pipe	Carbon Steel Carbon Steel	SA-333 Gr 6 SA-672 Gr C70
Fittings	Forging	Carbon Steel	SA-350 Gr LF2 or SA-420 Gr WPL6
Flanges	Forging	Carbon Steel	SA-350 Gr LF2
Valves (Gate, Globe, Check)	Forging Casting	Carbon Steel Carbon Steel	SA-350 Gr LF2 SA-352 Gr LCB
Bolting	Bar	Low Alloy Steel	SA-193 Gr B7
Nuts	Bar	Low Alloy Steel	SA-194 Gr 7
B—Low Pressure Spray Equipment Inside Wetwell (Class 3)			
Piping	Pipe	Carbon Steel	SA-106 Gr B SA- 672 Gr C60/C70

Table 6.1-1 Engineered Safety Features Component Materials* (Continued)

Component	Form	Material	Specification (ASTM/ASME)
Fittings	Forging	Carbon Steel	SA-105 SA-234 Gr WPB
Flanges	Forging	Carbon Steel	SA-105
Valves (Gate, Globe, Check)	Forging Casting	Carbon Steel Carbon Steel	SA-105 SA-216 Gr WCB
Bolting (same as A above)			
Nuts (same as A above)			
C—Interface to Fuel Pool Piping (Class 3)			
Piping	Pipe	Stainless Steel	SA-376 Type 316L SA-312 Type 316L SA-358 Type 316L
Valves (Gate, Globe, Check)	Forging	Stainless Steel	SA-182 Gr F316L SA-351 Gr CF3
Fittings	Forging	Stainless Steel	SA-182 Gr F316L or SA-403 Gr WP316L/W
Flanges	Forging	Stainless Steel	SA-182 Gr F316L SA-351 Gr CF3
Bolting (same as A above)			
Nuts (same as A above)			
HPCF			
Same as RHR-A above			
RCIC			
Same as RHR-A above			
Standby Liquid Control Pump (No welding)			
Fluid Cylinder	Forging	Stainless Steel	SA-182 F304
Cylinder Head, Valve Cover, and Stuffing Box Flange Plate	Plate	Stainless Steel	SA-240 Type 304
Cylinder Head Extension, Valve Stop, and Stuffing Box	Bar	Stainless Steel	SA-479 Type 304
Stuffing Box Gland and Plungers	Bar	Stainless Steel	SA-564 Type 630 (H 1100)
Studs	Bar	Alloy Steel	SA-193 Grade B7
Nuts	Forging	Alloy Steel	SA-194 Grade 7

Table 6.1-1 Engineered Safety Features Component Materials* (Continued)

Component	Form	Material	Specification (ASTM/ASME)
Standby Liquid Storage Tank			
Tank	Plate	Stainless Steel	SA-240 Type 304
Fittings	Forgings	Stainless Steel	SA-183 Gr F304
Pipe	Pipe	Stainless Steel	SA-312 Type 304
Welds	Filler	Stainless Steel	SFA 5.4 & 5.9, Types 308, 308L, 316L
Containment Vessel	Plate Plate	Carbon Steel Stainless Steel	SA-516 Gr 70 SA-240 Type 304L
Penetrations	Forging Forging	Carbon Steel Stainless Steel	SA-350 Gr LF 1 or 2 SA-182/F304L
Structural Steel	Shapes	Carbon Steel	A36
HVAC Emergency Cooling Water System			
Heat Exchanger	Plate Tube	Carbon Steel Copper Alloy	SA-283 Gr A SB75-C12200
Pump	Casting Casting	Carbon Steel Stainless Steel	SA-216 Gr WCB SA-351 Gr CF8
Valves	Casting Forging	Carbon Steel Carbon Steel	SA-216 Gr WCB SA-105
Piping	Seamless Pipe Welded Pipe	Carbon Steel Carbon Steel	SA-106 Gr A SA-672 Gr B60
Reactor Building Cooling Water System			
Heat Exchanger†	Plate Tubes		
Pump	Casting Casting	Carbon Steel Stainless Steel	SA-216 Gr WCC SA-351 Gr CF8
Valves	Casting Forging	Carbon Steel Carbon Steel	SA-216 Gr WCB SA-105
Piping	Seamless Pipe Welded Pipe	Carbon Steel Carbon Steel	SA-106 Gr A SA-672 Gr B60
Reactor Service Water System†			
Pump	Casting		
Valves	Casting		
	Casting Casting Forging		

Table 6.1-1 Engineered Safety Features Component Materials* (Continued)

Component	Form	Material	Specification (ASTM/ASME)
Piping	Seamless Pipe Welded Pipe		

* Carbon content for wrought austenitic stainless steels will be limited to 0.020% for service temperatures above 93.3°C.

† Materials are site dependent.

6.2 Containment Systems

6.2.1 Containment Functional Design

6.2.1.1 Pressure Suppression Containment

6.2.1.1.1 Design Bases

The ABWR pressure suppression primary containment system, which is comprised of the drywell and wetwell and supporting systems, is designed to have the following functional capabilities:

(1) The containment structure has the capability to maintain its functional integrity during and following the peak transient pressures and temperatures which would occur following any postulated loss-of-coolant accident (LOCA). A design basis accident (DBA) is defined as the worst LOCA pipe break (which leads to maximum containment and drywell pressure and/or temperature) and is further postulated to occur simultaneously with loss of offsite power and a safe shutdown earthquake (SSE).

The containment structure is designed for the full range of loading conditions consistent with normal plant operation and accident conditions, including the LOCA-related design loads in and above the suppression pool.

The containment structure is designed to accommodate the negative pressure difference between the drywell and wetwell and relative to the Reactor Building (R/B) surrounding.

(2) The containment structure and isolation system, with concurrent operation of other accident mitigation systems, is designed to limit fission product leakage, during and following the postulated DBA, to values less than leakage rates which would result in offsite doses greater than those set forth in 10CFR100.

(3) Capability for rapid closure or isolation of all pipes or ducts which penetrate the containment boundary is provided to maintain leakage within acceptable limits.

(4) The containment structure can withstand coincident fluid jet forces associated with the flow from the postulated rupture of any pipe within the containment.

(5) The containment structure is designed to accommodate flooding to a sufficient depth above the active fuel to permit safe removal of the fuel assemblies from the reactor core after the postulated DBA.

(6) The containment structure is protected from or designed to withstand hypothetical missiles from internal sources and uncontrolled motion of broken pipes which could endanger the integrity of the containment.

(7) The containment structure provides means to channel the flow from postulated pipe ruptures in the drywell to the pressure suppression pool.

(8) The containment system is designed to allow for periodic tests at the calculated peak or reduced test pressure to measure the leakage from individual penetrations, isolation valves and the integrated leakage rate from the structure to confirm the leaktight integrity of the containment.

(9) The Atmospheric Control System (ACS) establishes and maintains the containment atmosphere to less than 3.5% by volume oxygen during normal operating conditions to assure that inert atmosphere operation of two permanently installed recombiners can be initiated on high levels as determined by the Containment Atmospheric Monitoring System (CAMS).

6.2.1.1.2 Design Features

The containment structure consists of the following major components (shown in Figures 1.2-2 through 1.2-12):

(1) A drywell (DW), which is comprised of two volumes:

(a) An upper drywell (UD) volume surrounding the reactor pressure vessel (RPV) and housing the steam and feedwater lines and other connections of the reactor primary coolant system, safety/relief valves (SRVs) and the drywell HVAC coolers.

(b) A lower drywell (LD) volume housing the reactor internal pumps, fine motion control rod drives (FMCRD) and undervessel components and servicing equipment. The UD is a cylindrical, reinforced concrete structure with a removable steel head and a reinforced concrete diaphragm floor. The cylindrical RPV pedestal, which is connected rigidly to the diaphragm floor, separates the LD from the wetwell. It is a prefabricated steel structure filled with concrete after erection. Ten drywell connecting vents (DCVs), approximately 1m x 2m in cross-section, are built into the RPV pedestal and connect the UD and LD. The DCVs are extended downward via 1.2m inside diameter steel pipes, each of which has three horizontal 0.7m diameter vent outlets into the suppression pool.

(2) A wetwell, which is comprised of an air volume and suppression pool filled with water to rapidly condense steam from a reactor vessel blowdown via the SRVs or from a break in a major pipe inside the drywell through the vent system. The wetwell boundary is a cylindrical reinforced concrete wall which is continuous with the UD boundary. A reinforced concrete mat foundation supports the entire containment system and enclosed structures, systems and components, and extends to support the Reactor Building surrounding the containment.

(3) The containment structure includes a steel liner to reduce fission product leakage to allowable levels. All normally wetted surfaces of the liner in the suppression pool are stainless steel. Penetrations through the liner for the drywell head, equipment hatches, personnel locks, piping, and electrical and instrumentation lines are provided with seals and leaktight connections. The allowable leakage is 0.5% per day from all sources, excluding MSIV leakage.

The design parameters of the major components of the containment system are given in Table 6.2-1. A detailed discussion of their structural design bases is given in Section 3.8.

6.2.1.1.2.1 Drywell

The drywell is designed to withstand the pressure and temperature transients associated with the rupture of any primary system pipe inside the drywell and also the rapid reversal in pressure when the steam in the drywell is condensed by the ECCS flow following post-LOCA flooding of the RPV.

A vacuum breaker system has been provided between the drywell and wetwell. The purpose of the wetwell-to-drywell vacuum relief system is to prevent backflooding of the suppression pool water into the lower drywell and to protect the integrity of the diaphragm floor (D-F) slab between the drywell and wetwell, and the drywell structure and liner. Redundant vacuum relief systems are provided to protect against failure of a single system. The design drywell-to-wetwell pressure difference is + 172.6 kPaD and – 13.73 kPaD. The vacuum breaker system is also designed to withstand the high temperature associated with the break of a small line in the drywell which does not result in rapid depressurization of the RPV.

The maximum drywell temperature occurs in case of a steamline break (177.2°C). Even though the maximum airspace temperature is above the design value (Table 6.2-1), it does so for only a short time (about 1.2 seconds). Because it takes a much longer time for the drywell structural materials to increase in temperature, the drywell structural materials remain below the design temperature.

The maximum drywell pressure occurs in case of a feedwater line break (283.4 kPaG). The design pressure for the drywell (309.9 kPaG) includes 9% margin.

No vacuum breaker system is required for the primary containment-to-Reactor Building negative pressure, which is predicted to be maximum 8.76 kPaG, between the wetwell and the Reactor Building, compared to the design negative pressure of 13.7 kPaG.

A heating and cooling system is provided to maintain drywell temperatures during normal operation within acceptable limits for equipment operation, as described in Subsection 9.4.9.

The drywell is protected against the dynamic effects of plant-generated missiles (Section 3.5), and the jet forces and pipe whip associated with postulated line breaks (Section 3.6). Protection

is provided by the massive structure of the drywell and by providing restraints that prevent pipes from impacting on the drywell walls (see Subsection 3.8.3.1 for additional information).

Both upper drywell and lower drywell are provided with an equipment hatch for removal of equipment during maintenance and an air lock for entry of personnel into the drywell. These access openings are sealed under normal plant operation and are only opened when the plant is shut down for refueling and/or maintenance.

During normal operation, a nitrogen makeup subsystem automatically supplies nitrogen to the wetwell and drywell to maintain a slightly positive pressure to preclude air inleakage from the Reactor Building. Before personnel can enter the drywell, it is necessary to deinert the drywell atmosphere. The ACS, supported by the purge supply and exhaust system, provides for deinerting as discussed in detail in Subsection 6.2.5.2.

6.2.1.1.2.2 Wetwell

The suppression pool water is located inside the wetwell annular region between the cylindrical RPV pedestal wall and the outer wall of the wetwell. The horizontal vent system communicates the drywell to the suppression pool. The nominal submergence to the centerline of the top row of horizontal vents is 3.5m. The vertical spacing between the centerlines of the horizontal vents is 1.37m. The centerline of the bottom horizontal vent is 0.76m above the bottom of the suppression pool.

In the event of a pipe break within the drywell, the increased pressure inside the drywell forces a mixture of air, steam and water through the drywell connecting vents (DCVs) and horizontal vents into the suppression pool, where the steam is rapidly condensed. The noncondensable gases transported with the steam escape to and are contained in the free air volume of the wetwell. There is sufficient water volume in the suppression pool to provide a minimum of 0.61 meters of submergence over the top to the upper row of horizontal vents when water is removed from the pool during post-LOCA drawdown by the ECCS. This drawdown floods the RPV to the steamlines, floods the lower drywell to its drain to the DCV, and provides for water in transit from the break on its gravity drain back to the suppression pool.

The wetwell chamber design pressure is 309.9 kPaG and design temperature is 124°C.

Performance of the pressure suppression pool concept in condensing steam under water (main steamlines through the SRVs) has been demonstrated by the horizontal vent system tests as described in Appendix 3B.

The SRVs discharge steam from the relief valves through their exhaust piping and quenchers into the suppression pool. The quencher locations within the suppression pool are identified in Figures 1.2-3c, 1.2-13i and 3B-3. Operation of the SRVs is intermittent and closure of the valves with subsequent condensation of steam in the exhaust piping can produce a partial vacuum, thereby sucking suppression pool water into the exhaust pipes. Vacuum relief valves are provided on the exhaust piping to control the maximum SRV discharge bubble pressure resulting from high water levels in the SRV discharge pipe.

Under normal plant operating conditions, the maximum suppression pool water and wetwell airspace temperature is 35°C or less. Under blowdown conditions following an isolation event or LOCA, the initial pool water temperature may rise to a maximum of 76.6°C at 30 minutes. The continued release of decay heat after the initial blowdown may result in suppression pool temperatures as high as 88.7°C. The Residual Heat Removal (RHR) System is available in the Suppression Pool Cooling mode to control the pool temperature. Heat is removed via the RHR heat exchanger(s) to the Reactor Building Cooling Water (RCW) System and finally to the Reactor Service Water (RSW) System. The RHR System is described in Subsection 5.4.7.

6.2.1.1.3 Design Evaluation

6.2.1.1.3.1 Summary Evaluation

The key design parameter and the maximum calculated accident parameters for the pressure suppression containment are shown in Table 6.2-1.

The maximum drywell pressure would occur during a feedwater line break. The maximum drywell temperature condition would result from a main steamline break. All of the analyses assume that the primary system and containment system are initially at the nominal operating conditions.

6.2.1.1.3.2 Containment Design Parameters

Table 6.2-2 provides a listing of the key design parameters of the primary containment system including the design characteristics of the drywell, suppression pool and the pressure suppression vent system.

Table 6.2-2a provides the performance parameters of the related ESF systems which supplement the design conditions of Table 6.2-2 for containment cooling purposes during post-blowdown long-term accident operation. Performance parameters given include those applicable to full capacity operation and reduced capacities assumed for containment analyses. Analyses calculating the long-term containment response following a main steamline break used the containment cooling system only, and containment sprays were not used. Analyses calculating the long-term containment response following a feedwater line break used both the containment cooling system and containment sprays.

6.2.1.1.3.3 Accident Response Analysis

The containment functional evaluation is based upon the consideration of several postulated accident conditions which would result in the release of reactor coolant to the containment. These accidents include:

(1) An instantaneous guillotine rupture of a feedwater line

(2) An instantaneous guillotine rupture of a main steamline

(3) Small break accidents

The containment design pressure and temperature were established based on enveloping the results of this range of analyses.

For the ABWR pressure suppression containment system, the peak containment pressure following a LOCA is very insensitive to variations in the size of the assumed primary system rupture. This is because the peak occurs late in the blowdown and is determined in very large part by the transfer of the noncondensible gases from the drywell to the wetwell airspace. This process is not significantly influenced by the size of the break. In addition, there is a 9% margin between the peak calculated value and the containment design pressure that will accomodate small variations in the calculated maximum value.

Tolerances associated with fabrication of the RPV nozzles have been taken into account.

6.2.1.1.3.3.1 Feedwater Line Break

Immediately following a double-ended rupture in one of the two main feedwater lines just outside the vessel (Figure 6.2-1), the flow from both sides of the break will be limited to the maximum allowed by critical flow considerations. The effective flow area on the RPV side is given in Figure 6.2-2. Reverse RPV flow in the second FW line is prevented by check valves shown in Figure 6.2-1. During the inventory depletion period, subcooled blowdown occurs and the effective flow area at saturated condition is much less than the actual break area. The detailed calculational method is provided in Reference 6.2-1.

The feedwater system side of the feedwater line break (FWLB) was modeled by adding a time variant feedwater mass flow rate and enthalpy directly to the drywell airspace. The time histories of the mass flow and enthalpy were determined from the operating characteristics of a typical feedwater system.

The maximum possible feedwater flow rate was calculated to be 164% of nuclear boiler rated (NBR), based on the response of the feedwater pumps to an instantaneous loss of discharge pressure. Since the Feedwater Control System will respond to decreasing RPV water level by demanding increased feedwater flow, and there is no FWLB sensor in the design, this maximum feedwater flow was conservatively assumed to continue for 120 seconds (Figure 6.2-3). This is very conservative because:

(1) All feedwater system flow is assumed to go directly to the drywell.

(2) Flashing in the broken feedwater line was ignored.

(3) Initial feedwater flow was assumed to be 105% NBR.

(4) The feedwater pump discharge flow will coastdown as the feedwater system pumps trip due to low suction pressure. During the inventory depletion period, the flow rate is less than 164% because of the highly subcooled blowdown. A feedwater line length of 100m was assumed on the feedwater system side.

The specific enthalpy time history, assuming the break flow of Figure 6.2-3, is shown in Figure 6.2-4.

6.2.1.1.3.3.1.1 Assumptions for Short-Term Response Analysis

The response of the Reactor Coolant System and the Containment System during the short-term blowdown period of the accident has been analyzed using the following assumptions:

(1) The initial conditions for the FWLB accident are such that the containment pressure response is maximized. That is:

(a) The reactor is operating at 102% of the rated thermal power, which maximizes the post-accident decay heat.

(b) The initial suppression pool mass is at the high water level.

(c) The initial wetwell air space volume is at the high water level.

(d) The suppression pool temperature is the operating maximum temperature.

(2) The feedwater line is considered to be severed instantaneously. This results in the most rapid coolant loss and depressurization of the vessel, with coolant being discharged from both ends of the break.

(3) Scram occurs in less than one second from receipt of the high drywell pressure signal.

(4) The main steam isolation valves (MSIVs) start closing at 0.5 s after the accident. They are fully closed in the shortest possible time (at 3.5 s) following closure initiation. By assuming rapid closure of these valves, the RPV is maintained at a high pressure, which maximizes the calculated discharge of high energy water into the drywell.

(5) The vessel depressurization flow rates are calculated using Moody's homogeneous equilibrium model (HEM) for the critical break flow (Reference 6.2-2). The break area on the RPV side for this study is shown in Figure 6.2-2. During the inventory depletion period, subcooled blowdown occurs and the effective break area at saturated conditions is much less than the actual area. The detailed calculational method is provided in Reference 6.2-1.

Reactor vessel internal heat transfer is modeled by dividing the vessel and internals into six metal nodes. A seventh node models the reactor fuel. The assumptions include:

(a) The center of gravity of each node is specified as the elevation of that node.

(b) Mass of water in system piping (except for feedwater) is included in initial vessel inventory.

(c) Initial thermal power is 102% of rated power at steady-state conditions with corresponding heat balance parameters which correspond to turbine control valve constant pressure of 6.85 MPaA.

(d) Fuel relaxation and metal-water reaction heat are added to the ANSI/ANS-5.1 decay heat curve plus 20% margin.

(e) Initial vessel pressure is 7.27 MPaA.

(6) There are two HPCF Systems, one RCIC System, and three RHR Systems in the ABWR. These systems are conservatively not modeled for the short-term containment response anaysis.

(7) Drywell and wetwell airspaces are homogeneous mixtures of inert atmosphere, vapor and liquid water.

(8) The wetwell airspace temperature is allowed to exceed the suppression pool temperature as determined by a mass and energy balance on the airspace.

(9) Wetwell and drywell wall and structure heat transfer are ignored.

(10) Actuation of SRVs is modeled.

(11) Wetwell-to-drywell vacuum breakers are not modeled.

(12) Drywell and wetwell sprays and RHR cooling mode are not modeled.

(13) The dynamic backpressure model is used.

(14) Initial drywell conditions are 0.107 MPa, 57°C, and 20% relative humidity.

(15) Initial wetwell airspace conditions are 0.107 MPa, 35°C and 100% relative humidity.

(16) The drywell is modeled as a single node. All break flow into the drywell is homogeneously mixed with the drywell inventory.

(17) Because of the unique containment geometry of the ABWR, the inert atmosphere in the lower drywell would not transfer to the wetwell until the peak pressure in the drywell is achieved. Figure 6.2-5 shows the actual case and the model assumption.

Because the lower drywell is connected to the drywell connecting vent, no gas can escape from the lower drywell until the peak pressure occurs. This situation can be compared to a bottle whose opening is exposed to an atmosphere with an increasing pressure. The contents of the lower drywell will start transferring to the wetwell as soon as the upper drywell pressure starts decreasing. A conservative credit for transfer of 50% of the lower drywell contents into the wetwell was taken.

6.2.1.1.3.3.1.2 Assumptions for Long-Term Cooling Analysis

Following the blowdown period, the ECCS discussed in Section 6.3 provides water for core flooding, containment spray, and long-term decay heat removal. The containment pressure and temperature response during this period was analyzed using the following assumptions:

(1) There are two HPCF Systems, one RCIC System, and three RHR Systems in the ABWR. All moter-operated pump systems (HPCF and RHR) are assumed to be available. HPCF flow cannot begin until 47 seconds after a break, and then the flow rate is a function of the vessel-to-wetwell differential pressure. Rated HPCF flow is 182 m^3/h per system at 8.12 MPaD and 727 m^3/h, per system at 0.69 MPaD. Rated RHR flow is 954 m^3/h at 0.28 MPaD with shutoff head of 1.55 MPaD. A single failure of one RHR heat exchanger was assumed for conservatism.

(2) The ANSI/ANS-5.1 decay heat plus 2-sigma uncertainty is used. Fission energy, fuel relaxation heat, and pump heat are included.

(3) The suppression pool volume corresponds to the low water level; however, the wetwell airspace volume used corresponds to the suppresion pool at the high water level.

(4) After 30 minutes, one RHR heat exchanger is activated to remove energy via recirculation cooling of the suppression pool and one RHR heat exchanger is activated to remove energy via drywell sprays with the RCW System and ultimately to the RSW System.

(5) The maximum service water temperature is assumed to be 35°C. This is a conservative assumption that maximizes the suppression pool temperature.

(6) The lower drywell flooding is not modeled.

(7) Structural heat sinks are modeled in the containment system.

6.2.1.1.3.3.1.3 Short-Term Accident Responses

The calculated containment pressure and temperature responses for a feedwater line break are shown in Figures 6.2-6 and 6.2-7, respectively. The peak pressure (283.4 kPaG) and

temperature (141.6°C) occur in the drywell. The containment design pressure of 309.9 kPaG contains a margin of 9% to the peak calculated containment pressure.

The short-term drywell pressure peak is mainly driven by the wetwell pressurization. The wetwell pressurization is a function of three major parameters:

(1) The increased wetwell air mass and wetwell air mass temperature caused by the addition of drywell air

(2) Compression of the airspace volume due to increased suppression pool volume

(3) Increased vapor partial pressure from increasing suppression pool temperature

Once air carryover from the drywell is completed, the wetwell and, subsequently, the drywell pressure peak occurs as the volumetric compression is completed and the pool volume begins to decrease due to the drawdown effects of the ECCS flow. Since the suppression pool volume continues to decrease as the ECCS flow continues, the short-term pressure peak is the peak pressure for the transient.

6.2.1.1.3.3.1.4 Long-Term Accident Responses

In order to assess the adequacy of the containment system following the initial blowdown transient, an analysis was made of the long-term temperature and pressure response following the accident. The analysis assumptions are those discussed in Subsection 6.2.1.1.3.3.1.2.

The short-term pressure peak (283.4 kPaG) of Figure 6.2-8a is the peak pressure for the whole transient. Figure 6.2-8 shows temperature time histories for the suppression pool, wetwell, and drywell temperatures. The peak pool temperature (88.7°C) is reached at 12,893 seconds (3.58 hours) and remains below the 97.2°C limit.

6.2.1.1.3.3.2 Main Steamline Break

A schematic of the ABWR main steamlines, with a postulated break in one of the main steamlines, is shown in Figure 6.2-9. The main steamline (MSL) break is a double-ended break with one end fed by the RPV directly through the broken line, and the other fed by the RPV through the unbroken main steamlines until the MSIVs are closed. Once the MSIVs are closed, the break flow is only from the RPV through the broken line.

The effective break area used for the MSL is shown in Figure 6.2-10. More detailed descriptions of the MSL break model are provided in the following:

(1) Each MSL contains a flow limiter built into the MSL nozzle on the RPV with a throat area of 0.0983m^2, as shown in Figure 6.2-9.

(2) The break is located in one MSL at the inboard MSIV.

(3) During the inventory depletion period, the flow multiplier of 0.75 is applied (Reference 6.2-1).

(4) The flow resistance of open MSIVs is considered. A conservative value of 2.062 for pressure loss coefficient for two open MSIVs was taken. The nominal value is approximately 3.0. When the open MSIV resistance is considered, the flow chokes at the MSIV on the piping side as soon as the inventory depletion period ends. The effective flow area on the piping side reduces to 70% of a frictionless piping area. The value of 70% applies to flow of steam and two-phase mixture with greater than 15% quality.

This assumption is quite conservative because all other resistances in piping are ignored and the flow in the steamline within a one to two second period is either all steam or a two-phase mixture of much greater than 15% quality.

(5) MSIVs are completely closed at a conservative closing time of 5 seconds in order to maximize the break flow.

6.2.1.1.3.3.2.1 Assumptions for Short-Term Response Analysis

The response of the reactor coolant system and the containment system during the short-term blowdown period of the MSLB accident is analyzed using the assumptions listed in the above subsection and Subsection 6.2.1.1.3.3.1.1 for the feedwater line break, with the following exceptions:

(1) The break flow is saturated steam until the two-phase level swell reaches the main steam nozzle in two seconds, thereby changing the flow quality to the RPV average quality. This provides the highest drywell pressure and temperature.

(2) The SRVs are not actuated.

6.2.1.1.3.3.2.2 Assumption for Long-Term Cooling Analysis

The containment pressure and temperature response during the period following blowdown is analyzed using the assumptions listed in Subsection 6.2.1.1.3.3.1.2 with the following exceptions:

(1) After 30 minutes, the RHR heat exchangers are activated to remove energy via recirculation cooling of the suppression pool with one division of RHR and suppression pool cooling with another division of RHR. This is a conservative assumption, since the RHR design permits initiation of containment cooling well before a 30-minute period.

(2) Feedwater flow coast down ends when the inlet temperature drops below the expected peak suppression pool temperature. The integrated enthalpy is as described in Figure 6.2-11. This break-off is conservative in order to limit water into the system that would tend to lower the peak suppression pool temperature.

6.2.1.1.3.3.2.3 Short-Term Accident Response

Figures 6.2-12 and 6.2-13 show the pressure and temperature responses of the drywell and wetwell during the blowdown phase of the steamline break accident.

The MSLB with two-phase blowdown starting at two seconds provides the highest peak drywell temperature. The peak drywell temperature is 177.2°C, above the design value of 171.1°C. Even though the maximum airspace temperature is above the design value, it does so for only a short time (about 1.2 seconds). Because it takes a much longer time for the drywell structural materials to increase in temperature, the drywell structural materials remain below the design temperature. The MSLB is the limiting break with respect to peak drywell temperature when compared to the FWLB. The peak drywell pressure for the MSLB remains below that for the FWLB, which becomes the most limiting.

6.2.1.1.3.3.2.4 Long-Term Accident Response

Figures 6.2-14 and 6.2-15 show the pressure and temperature responses of the drywell and wetwell for the long-term phase of the steamline break accident.

The long-term MSLB provides the highest peak wetwell pressure. This peak value remains below the design limit (Table 6.2-1).

6.2.1.1.3.4 Accident Analysis Models

6.2.1.1.3.4.1 Short-Term Pressurization Model

The analytical models, assumptions and methods used to evaluate the containment response during the reactor blowdown phase of a LOCA are described in References 6.2-1 and 6.2-3.

6.2.1.1.3.4.2 Long-Term Cooling Model

Once the RPV blowdown phase of the LOCA is over, a fairly simple model of the drywell and wetwell may be used. During the long-term post-blowdown transient, the RHR cooling system flow path is a closed loop and the suppression pool mass will be constant.

The analytical models, assumptions and methods used to evaluate the containment response during the long-term cooling phase of a LOCA are described in Reference 6.2-3.

6.2.1.1.4 Negative Pressure Design Evaluation

During normal plant operation, the inerted wetwell and the drywell volumes remain at or slightly above atmospheric conditions. However, certain events in the containment cause

depressurization transients that can create a negative pressure differential across the diaphragm floor and lower drywell access tunnels (negative means the wetwell pressure is greater than the drywell pressure) and a negative pressure differential across the drywell and the wetwell walls (negative means the Reactor Building pressure is greater than the containment pressure). Vacuum relief function is necessary in order to limit these negative pressure differentials within design values. The events which cause the containment depressurization are:

(1) The drywell/wetwell sprays are inadvertently actuated during normal operation.

(2) The drywell is depressurized following a LOCA.

(3) The wetwell spray is actuated subsequent to a stuck open relief valve (SORV).

However, the design/expected operating conditions preclude the possibility of the first event (inadvertent DW spray during normal operation). There are features on the ABWR that prevent the initiation of the RHR mode of the drywell spray(s) during normal plant operation. The first is an interlock on the drywell spray injection valves that requires high drywell pressure to be present before the valves are allowed to be opened. Then there is a time delay in the logic that will allow initiation of drywell spray 60 seconds after the drywell high pressure signal (2 psig) is received. In addition, the RHR system can only be manually initiated in the drywell spray mode from the main control room by two methods, both requiring two independent actions. Therefore, the probability of a spurious initiation of drywell spray during normal plant operation is very remote.

Drywell depressurization following a LOCA results in the severest pressure transient in the drywell; this transient is therefore used in sizing the Wetwell-to-Drywell Vacuum Breaker System (WDVBS). The most severe depressurization in the wetwell is caused by wetwell spray actuation subsequent to a stuck open relief valve. The analysis of this transient shows that the Primary Containment Vacuum Breaker System (PCVBS) is not required.

6.2.1.1.4.1 Wetwell-to-Drywell Negative Differential Pressure

The WDVBS is sized to keep the differential pressure between the drywell and wetwell within the negative design values for the PCV, diaphragm floor, and tunnels during all operating and accident transients.

Without the WDVBS, the post-LOCA drywell pressure may decrease to the saturation pressure (20.6-27.5 kPaA) of the drywell spray flow or the break flow out of the RPV, and the wetwell pressure may be still around 275.6 kPaA, creating the negative pressure differential close to 275.6 kPaD. The primary purpose of the WDVBS is to prevent such a large negative pressure differential between the drywell and wetwell. In addition, the WDVBS can hold the drywell pressure above the negative design pressure of the PCV liner. This is achieved by the transfer of air from the wetwell to the drywell.

Two LOCA events are analyzed to check the adequacy of the WDVBS design. They are:

Event 1: ECCS reflood following a LOCA (FWLB) and actuation of the DW sprays without actuation of the WW sprays.

Event 2: Small Steam Line Break (0.00093 m^2) with DW spray actuation and without actuation of the WW sprays.

During a LOCA (FWLB or SSLB) event, the air initially in the drywell will be purged into the wetwell air space and the drywell will be filled with mostly steam. During this period, the wetwell will be pressurized due to air flow from the drywell, and the drywell will experience a rapid depressurization due to steam condensation when the drywell spray is initiated. Without WDVBS, relatively cold break flow which occurs for the FWLB when the RPV is flooded with ECCS water or during drywell spray flow could result in a negative pressure differential exceeding the design value of 13.7 kPaD. The primary purpose of the WDVBS is to keep the negative pressure differential between the drywell and wetwell within its design value. In addition, the WDVBS can hold the drywell pressure above the negative design pressure of the PCV liner. This is achieved by the transfer of gas from the wetwell to the drywell through the WDVBS.

For each of the two LOCA events identified above, an event scenario is developed such that the WW-to-DW negative pressure differential is maximized.

For Event 1, the following assumptions are made:

(1) The RPV is initially in a hot standby condition with negligible decay heat generation.

(2) The initial pressure for both the DW and WW is 101.1 kPaA.

(3) The initial relative humidity for both the DW and WW is 100%.

(4) The initial temperature for the DW and WW is 57.2°C and 35°C, respectively.

(5) The service water temperature for the RHR is 15.6°C.

(6) HPCF and RCIC flow is taken from the condensate storage tank at 15.6°C.

(7) The ECCS is comprised of 2 HPCF, 1 RCIC, and 3 RHR (2 containment sprays - Divisions B and C, and 1 LPFL) - no single failure in ECCS.

(8) The DW spray is initiated when the WW pressure peaks. Since the peak WW pressure occurs before 2 minutes into the event, the DW spray is assumed to initiate at 2 minutes. The design precludes initiation of the DW spray before 2 minutes.

(9) The vacuum breakers are fully open when the WW pressure is 3.45 kPa higher than the DW.

For Event 2, the assumptions are the same as Event 1, except for the following:

(1) The RPV is initially at 102% of rated power.

(2) Scram occurs, concurrent with the occurrence of a 0.00093 m^2 small steam line break.

(3) The DW spray is initiated when the WW pressure peaks. Since peak WW pressure does not occur within 30 minutes into the event, the DW spray is assumed to initiate at 30 minutes. This assumption is based on the premise that the operator is expected to initiate containment cooling with the DW spray no later than 30 minutes into the event.

(4) For this event, an additional sensitivity case was analyzed by assuming 106.52 kPaA for the initial DW and WW pressure and 20% relative humidity for the DW.

The two LOCA events were analyzed by assuming that one of eight vacuum breakers in the WDVBS is out of service. The total vacuum breaker flow area is characterized by the ratio $A/\sqrt{k}$,where A is the actual flow area of the vacuum breaker and k is its pressure loss coefficient. The value of $A/\sqrt{k}$ is calculated to be 0.82 m^2 with one vacuum breaker out of service. The calculated negative pressure differential between the wetwell and drywell for the two events is 3.86 kPaD which is well below the design value of 13.7 kPaD; the adequacy of the WDVBS design is confirmed. The pressure-time histories for Event 1 are shown in Figure 6.2-17.

6.2.1.1.4.2 Wetwell-to-Reactor Building Negative Differential Pressure

Since the WDVBS meets the PCV negative design pressure requirement on the drywell, additional analyses were performed to determine need for the PCVBS to satisfy the PCV negative design pressure requirement on the wetwell.

The wetwell-to-Reactor Building negative pressure shall be less than 13.7 kPaG to protect the PCV liner in the wetwell.

The ABWR plant has no vacuum breakers between the containment and the reactor building. Three limiting containment depressurization events are analyzed to confirm that the above requirement is met without vacuum breakers between the primary containment and reactor building. Inadvertent actuation of drywell sprays is not included as a limiting event because of the design features discussed in Section 6.2.1.1.4.1. The limiting events analyzed are:

Event 3: LOCA (FWLB) event with containment (DW and WW) sprays on.

Event 4: SSLB with containment (DW and WW) sprays on.

Event 5: Stuck Open Relief Valve Event with DW and WW sprays on.

To develope the scenarios for these three events the following are considered:

During any of the above events, the suppression pool temperature increases as the event progesses. As a result, the DW and WW spray temperature will also increase as the event progresses. Since a colder spray temperature produces a greater and more rapid pressure drop, the analyses simulate spray initiation at the earliest possible times.

ABWR plant operational procedures call for termination of containment spray when the containment pressure decreases below 113.34 kPaA. Therefore, this operational procedure is considered in the event scenario. It is conservatively assumed in the analyisis that the operator terminates containment spray 30 minutes after the containment pressure falls to atmospheric pressure (101.35 kPaA).

The event scenarios and results for the three analyses used to evaluate Containment-to-Reactor Building negative differential pressure are described as follows:

Event 3: LOCA (FWLB) with DW and WW sprays on

This event is identical to Event 1 described in Section 6.2.1.1.4.1, except that:

The WW spray is turned on at one minute into the event and the DW spray is turned on at two minutes into the event.

Both DW and WW sprays are turned off 30 minutes after either DW or WW airspace pressure decreases to 101.35 kPaA.

For this event, the containment pressure and temperature initially increase due to the break flow from the reactor. There is an initial rapid decrease in the drywell and wetwell pressures when the containment sprays are turned on. After the reactor blowdown period is completed and the ECCS flow floods the vessel to the break location, relatively colder break flow occurs. This results in a further decrease in the containment pressures and temperatures. The containment pressure ultimately decreases to 101.35 kPaA around 20 minutes into the event. Thirty minutes later, the containment sprays are terminated by the operator. At that time, the containment pressure reaches its minimum value. The calculated maximum Reactor Building -to- Primary Containment differential pressure for this event is 2.62 kPaD which is less than the containment negative design value of 13.7 kPaD.

Event 4: SSLB with DW and WW sprays on

This event is identical to Event 2 described in Section 6.2.1.1.4.1, except that:

The WW spray is turned on at one minute into the event and the DW spray is turned on at two minutes into the event.

Both DW and WW sprays are turned off 30 minutes after either DW or WW airspace pressure decreases to 101.35 kPaA.

For this event, the containment experiences a rapid depressurization (below 101.35 kPaA) shortly after initiation of the containment spray which levels out at about 5 minutes into the event. Afterwards the drywell and wetwell pressure increase gradually for the remainder of the event. Therefore, only the initial containment depressurization shortly after spray initiation is of concern for this event.

The calculated maximum RB-to-DW and RB-to-WW differential pressure for this event are 9.10 kPaD and 5.86 kPaD, respectively, which are less than the containment negative design value of 13.7 kPaD.

Event 5: SORV with DW and WW Sprays On

During an SORV event, SRV discharge to the suppression pool heats up the suppression pool and also increases the wetwell airspace pressure and temperature. When the pressure in the wetwell becomes greater than the drywell pressure, the WDVBS allows the flow of air from the wetwell to the drywell. This results in a gradual increase in both the drywell and wetwell pressure. For this analysis, it is assumed that the reactor will scram when the pool temperature reaches 43.3 C. The analysis for this event is performed from this point; namely from the time of 43.3 C suppression pool temperature when a reactor scram occurs. It is assumed for the analysis that the drywell temperature is kept at 57.2 C operating temperaure due to the operation of the drywell cooler. The drywell and wetwell pressure may be higher than the minimum operating pressure of 101.35 kPaA due to the SRV discharge to the suppression pool prior to reactor scram. However, for this analysis, it is conservatively assumed that the drywell and wetwell pressure is 101.35 kPaA at the time of reactor scram. Thus, the following initial conditions are assumed for this event:

- SP temperature is 43.3 C.
- WW airspace temperature is at 43.3 C.
- DW temperature is 57.2 C.
- DW relative humidity is 100%.
- DW pressure is 101.35 kPaA.
- WW pressure is 101.35 kPaA.

With the initial conditions above, the following is also assumed:

(1) The RPV is initially at 102% of rated power.

(2) Reactor scram occurs, concurrent with the occurrence of a stuck-open relief valve.

(3) The WW spray is turned on at one minute into the event and the DW spray is turned on at two minutes into the event.

(4) Both DW and WW sprays are turned off 30 minutes after either DW or WW airspace pressure decreases to 101.35 kPaA.

Similar to Event 4, the containment experiences a rapid depressurization (below 101.35 kPaA) shortly after initiation of the containment spray which levels out at about 6 minutes into the event. Afterwards, the drywell and wetwell pressures increase gradually for the remainder of the event duration. Therefore, only the initial containment depressurization shortly after spray initiation is of concern for this event.

The calculated maximum Reactor Building (RB)-to-DW and RB-to-WW differential pressure for this event is 12.13 kPaD and 8.76 kPaD, respectively, which are less than the containment negative design value of 13.7 kPaD.

As shown above, for all the three events the containment-to-reactor building differential pressure without vacuum breakers is less than the design pressure of 13.7 kPaD. Figure 6.2-18 shows the pressure-time histories for the wetwell and drywell for Event 5, which is the limiting event with respect to the minimum containment pressure.

6.2.1.1.5 Steam Bypass of the Suppression Pool

6.2.1.1.5.1 Introduction

The concept of the pressure suppression reactor containment is that any steam released from a pipe rupture in the primary system will be condensed by the suppression pool and will not have an opportunity to produce a significant pressurization effect on the containment. This is accomplished by channeling the steam into the suppression pool through a vent system. If a leakage path were to exist between the drywell and the wetwell gas space, the leaking steam would produce undesirable pressurization of the containment. To mitigate the consequences of any steam which bypasses the suppression pool, operator will actuate containment sprays 30 minutes after containment pressure reaches to a defined value.

The following presents the results of calculations performed to determine the allowable leakable capacity between the drywell and wetwell gas space.

6.2.1.1.5.2 Criteria

The allowable bypass leakage is defined as the amount of steam which could bypass the suppression pool without exceeding the containment design pressure. In calculating this value, a stratified drywell atmosphere model is used to ensure a conservative result. A stratified model will allow steam only flow through the bypass leakage area, thus maximizing heatup of the wetwell gas space.

6.2.1.1.5.3 Bypass Capability Without Containment Sprays and Heat Sinks

Large primary system ruptures generate high pressure differentials across the assumed leakage paths which, in turn, give proportionately higher leakage flow rates. However, large primary system breaks also rapidly depressurize the reactor and terminate the blowdown. Once this has occurred, there will no longer be a pressure differential across the drywell leakage path, so the containment pressurization due to steam bypass leakage will cease. Since leakage into the wetwell gas space is of limited duration, the allowable area of the steam bypass leakage paths is expected to be large.

As the size of the assumed primary system rupture decreases, the magnitude of the differential pressure across any leakage path also decreases. However, smaller breaks are expected to result in an increasingly longer reactor blowdown period, which, in turn, results in longer duration of the steam bypass leakage flow. The limiting case is a sufficiently small primary system break which will not automatically result in reactor depressurization. For this case it is assumed that the response of the plant operator is to shut the reactor down in an orderly manner at 55.6°C per hour cooldown rate. This would result in the reactor being depressurized and the break flow being terminated within approximately 6 hours. During this 6-h period, the blowdown flow from the reactor primary system would have swept all the drywell noncondensable gas over into the wetwell gas space. This continuous pressure differential, combined with a 6-h duration, is expected to result in the most severe drywell-to-wetwell steam bypass leakage requirement.

Based on the above description of a limiting case, a simplified analysis was performed to determine the allowable leakage path area. Consistent with the above description, this analysis assumed that plant operator initiates and completes a normal plant shutdown (at a rate of 55.6°C/h) in 6 hours, and there is continuous steam bypass leakage over the entire 6-h period. A stratified atmosphere model, which assumed steam only flow through the leakage path, was used to ensure conservative result. For an added conservatism, no credit for structural heat sinks and actuation of drywell/wetwell sprays was taken.

Simplified end-point calculations were done to determine maximum allowable area of the leakage paths. Key steps included in this procedure are:

(1) Compute, M_{NC}, mass of noncondensable gas initially in the drywell and the wetwell gas space.

(2) Compute, ΔP_V, pressure difference between drywell and wetwell gas space needed to keep water level depressed to the top of upper row of vents.

(3) Compute, P_{WM}, the maximum allowable pressure in the wetwell gas space.

$$P_{WM} = [P_{DES} - \Delta P_V],$$

where

P_{DES} is the containment design pressure.

(4) Compute $(P_{WM})_{AIR}$, and $(P_{WM})_{STEAM}$ components of P_{WM}. Assume that wetwell gas space temperature is equal to accident maximum pool temperature, and there is complete carryover of drywell noncondensable gas into the wetwell gas space.

$$P_{WM} = [(P_{WM})_{AIR} + (P_{WM})_{STEAM}]$$

(5) Compute, M_S, mass of steam corresponding to $(P_{WM})_{STEAM}$. This defines allowable steam bypass leakage mass into the wetwell gas space.

(6) Compute leakage path flow rate of steam, M_{dot}, as follows:

$$M_{dot} = [(A/\sqrt{K})\sqrt{(2g_c(\Delta Pv)/v)}]$$

where

v = drywell steam specific volume, and

K = total loss coefficient of the flow path.

(7) Compute the maximum allowable leakage path area, $A/\sqrt{K}$, as follows:

$$A/\sqrt{K} = [(M_{dot})/\sqrt{2g_c(\Delta Pv)/v}]$$

$$= [(M_S/\Delta t)/\sqrt{2g_c(\Delta P_V)/v}]$$

where

Δt = Accident duration

Using the procedure outlined above and assuming an accident duration of 6 hours, the maximum allowable leakage path area under these circumstances is determined to be an effective flow area $A/\sqrt{K}$ of 5 cm^2. See Appendix 6E for additional bypass considerations.

6.2.1.1.5.4 Bypass Capability With Containment Spray and Heat Sinks

An analysis has been performed which evaluates the bypass capability of the containment for a spectrum of break sizes considering containment sprays and containment structural heat sinks as means of mitigating the effects of steam bypass of the suppression pool.

The containment system design provides two RHR spray loops, and each loop consists of both wetwell and drywell sprays. In operation of RHR in spray mode, the wetwell and drywell sprays activate simultaneously. Per loop, the design flow rate of drywell spray is about 840 m^3/hour, and that of wetwell spray is about 114 m^3/hour. In this analysis it is assumed that spray is to be initiated no sooner than 30 minutes after the wetwell gas space pressure of 103.4 kPaG is reached. This assumed value of spray initiation pressure set point, which is higher than the

EPGs pressure set point of 71.6 kPaG, is expected to produce slightly conservative results. The suppression pool water passes through the RHR heat exchanger and is then injected into the drywell and wetwell spray headers located respectively in the upper region of drywell and wetwell gas space. The spray will rapidly condense the stratified steam, creating a homogeneous air-steam mixture in the containment. Structural heat sinks (drywell and wetwell boundary surfaces) were considered with variable convective heat transfer coefficients based on Uchida correlation. The reactor vessel shutdown rate was assumed to be 55.6°C/h, and the maximum design service water temperature was used. This shutdown rate corresponds to the maximum rate which does not thermally cycle the reactor vessel. This analysis results in an allowable maximum steam bypass leakage capability of $A/\sqrt{K}$ of 50 cm^2, meeting the criterion that calculated maximum containment pressure remain below the containment design pressure. Allowable leakage capacity vs primary system break area is shown in Figure 6.2-42.

The key assumptions for allowable steam bypass calculations utilizing structural heat sinks are summarized as follows:

(1) Following the occurrence of a pipe line break within the drywell, air is purged through the vents into the wetwell.

(2) Flow through the postulated leakage path is pure steam. For a given leakage path, if the leakage flow consists of mixture of liquid and vapor, the total leakage mass flow rate is higher, but the steam flowrate is less than for the case of pure steam leakage. Since the steam entering the wetwell air space results in the additional pressurization, this is considered as a conservative assumption.

(3) The containment sprays are manually actuated 30 minutes after the wetwell airspace pressure reaches 103.4 kPaG.

(4) Credit for both drywell and wetwell sprays is taken.

(5) The efficiency of the sprays is dependent upon the local steam-to-air ratio. A conservative constant value of 0.7 was used in this analysis.

(6) Heat is transferred to exposed drywell/wetwell concrete walls (with steel liner) in the drywell and wetwell gas space regions. The Uchida convective heat transfer coefficients used are based on the local steam-to-air ratio.

(7) No energy is assumed to leave the containment except through the RHR heat exchangers.

The following is an illustration of the methods employed in calculating steam condensing capability under typical post-LOCA conditions. The condensation capability is calculated using the following equation:

$$M_c = M_s \times N_s \times [(T_c - T_s)/H_{fg}] \times C_p$$

where

M_c = steam condensation rate

M_s = spray flow rate

N_s = spray efficiency

T_c = containment temperature

T_s = spray temperature at the spray nozzles

H_{fg} = latent heat of vaporization of water

C_p = constant pressure specific heat of water

The spray water temperature is calculated from:

$$T_s = T_p - KHX \times [(T_p - T_{sw}) / (M_s \times C_p)]$$

where

T_p = suppression pool temperature

KHX = RHR heat exchanger effectiveness

T_{sw} = service water temperature

Containment sprays have a significant effect on the allowable steam bypass capability. Use of sprays increases the maximum allowable bypass leakage by an order of magnitude and represents an effective backup means of condensing bypass steam. See Appendix 6E for additional bypass consideration.

6.2.1.1.5.5 Suppression Pool Bypass During Severe Accidents

The only mode of suppression pool bypass that presents any significant risk during a severe accident is vacuum breaker leakage. Vacuum breaker leakage results in the passage of gas from the drywell into the wetwell airspace. Vapor suppression and fission product scrubbing by the suppression pool are not available to the gas and vapor which pass through the vacuum breakers. The consequences associated with vacuum breaker leakage can be mitigated by use of containment sprays.

Large amounts of leakage can occur as a result of catastrophic failure of valve components or a valve sticking open. Lesser amounts of leakage can result from normal wear and tear including degradation of the valve seating surfaces. For sufficiently large amounts of leakage during a severe accident without containment heat removal, the time to COPS activation or

containment overpressurization can be reduced and the amount of fission products released can be increased.

The probability that the vacuum breakers will leak or stick open will be minimized by using materials selected for wear resistance and using high quality seating surfaces. Additionally, the position switches which provide annunciation in the control room can sense a gap between the disk and the seating surface. If the gap is less than 9 mm, aerosols generated as a result of core damage can form a plug and terminate bypass flow. The severe accident analysis assumes the position switch can sense this gap.

6.2.1.1.5.6 Justification for Deviation From SRP Requirements

6.2.1.1.5.6.1 Actuation of Wetwell Sprays

It is recognized that provision of manual, and not automatic, spray actuation of wetwell sprays in the ABWR design is a deviation from the SRP requirement (Appendix A to SRP Section 6.2.1.1.C) of automatic actuation of sprays. The SRP states that the wetwell spray should be automatically actuated 10 minutes following a LOCA signal and an indication of pressurization of the wetwell to quench steam bypassing the suppression pool. However, in determining maximum allowable steam bypass leakage area for ABWR design, analyses assume and take credit for operator actuation of wetwell sprays 30 minutes (instead of 10 minutes) following a LOCA signal and after the wetwell gas space pressure reaches 103.4 kPaG, though ABWR EPGs permit actuation of wetwell sprays when wetwell gas space pressure reaches to 71.6 kPaG.

Given this conservative analysis assumption, provision of manual wetwell spray actuation is considered sufficiently adequate to provide mitigation for consequences due to steam bypass leakage during a LOCA event. There appears to be no technical merit in upgrading the current ABWR design to facilitate automatic actuation of wetwell sprays. Therefore, this deviation from the SRP requirement of automatic actuation of wetwell sprays is considered technically adequate. Plant safety is not compromised by providing manual, and not automatic, actuation of wetwell sprays in the current ABWR design.

6.2.1.1.5.6.2 Not Used

6.2.1.1.5.6.3 Vacuum Valve Operability Tests

Section B.3.b of Appendix A to SRP Section 6.2.1.1.C specifies that all vacuum valves should be operability tested at monthly intervals to assure free movement of the valves. Operability tests are conducted at plants of earlier BWR designs using an air actuated cylinder attached to the valve disk. The air actuated cylinders have been found to be one of the root causes of vacuum breakers failing to close. Free movement of the vacuum breakers in the ABWR design has been enhanced by eliminating this potential actuator failure mode, improving the valve hinge design and selecting materials which are resistant to wear and galling. Therefore, this

requirement for monthly testing is deemed unnecessary for the ABWR design. However, the vacuum breakers will be tested for free movement during each outage.

6.2.1.1.5.7 Bypass Leakage Tests and Surveillance

There will be a provision for leakage tests and surveillance to provide assurance that suppression pool bypass leakage is not substantially increased over the plant life. This will include both periodic low-pressure leak tests, a pre-operational high-pressure leak test, and a periodic visual inspection.

6.2.1.1.5.7.1 High-Pressure Leak Test

A single pre-operational high-pressure bypass leakage test will be performed. The purpose of this test is to detect leakage from the drywell to suppression chamber. This test will be performed at approximately the peak drywell to wetwell differential pressure, and will follow the high-pressure structural test of the diaphragm floor. The acceptance criteria is specified in Subsection 6.2.1.1.5.7.3.

6.2.1.1.5.7.2 Low-Pressure Leak Test

A post-operational low-pressure leakage test will be performed to detect leakage from the drywell to suppression chamber. This test will be performed at each refueling outage at a differential pressure corresponding to approximately, but less than, the submergence of the top horizontal vents. The acceptance criteria is specified in Subsection 6.2.1.1.5.7.3.

6.2.1.1.5.7.3 Acceptance Criteria for Leakage Tests

The acceptance criteria for both high- and low-pressure leakage tests shall be a measured bypass leakage area $A/\sqrt{K}$ which is less than 10% of the suppression pool steam bypass capability $A/\sqrt{K}$ specified in Subsection 6.2.1.1.5.4.

6.2.1.1.5.7.4 Surveillance Test

A visual inspection will be conducted to detect possible leak paths at each refueling outage. Each vacuum relief valve and associated piping will be checked to determine that it is clear of foreign matter. Also, at this time each vacuum breaker will be tested for free disk movement.

6.2.1.1.5.8 Vacuum Relief Valve Instrumentation and Tests

6.2.1.1.5.8.1 Position Indicators and Alarms

Redundant position indicators will be placed on all vacuum breakers with redundant indication and an alarm in the control room. The vacuum breaker position indicator system will be designed to provide the plant operators with continuous surveillance of the vacuum breaker position. The vacuum relief valve position indicator system will have adequate sensitivity to detect a total valve opening, for all valves, that is less than the design bypass capability, $A/\sqrt{K}$, defined in Subsection 6.2.1.1.5.4. The detectable valve opening will be determined by the

actual value of the pressure loss coefficient, K, and will be based on the assumption that the valve opening is evenly divided among all the vacuum breakers.

6.2.1.1.5.8.2 Vacuum Valves Operability Tests

As described in 6.2.1.1.5.7.4, the vacuum relief valves will be tested for free movement during each refueling outage. There will be no operability tests at monthly intervals, see Subsection 6.2.1.1.5.6.3 for justification.

6.2.1.1.6 Suppression Pool Dynamic Loads

During a LOCA and events such as SRV actuation, steam released from the primary system is channeled into the suppression pool where it is condensed. These actuation events impose hydrodynamic loading conditions on the containment system structures. The containment and its internal structures are designed to withstand all loading conditions associated with these events. These hydrodynamic loads are combined with those from the postulated seismic events in the load combinations specified in Subsections 3.8.1.3 and 3.8.3.3. A detailed description and definition of hydrodynamic loading conditions for structure design is provided in Appendix 3B. These loading conditions are briefly summarized in the following paragraphs.

6.2.1.1.6.1 LOCA Loads

During a postulated loss-of-coolant accident (LOCA) inside the drywell, wetwell region will be subjected to the following three sequential hydrodynamic loading conditions of significance to structure design:

- Pool Swell loads
- Condensation Oscillation (CO) loads
- Chugging (CH) loads

Following a postulated LOCA and after the water is cleared from the vents, air/steam mixture from the drywell flows into the suppression pool creating a large bubble at vent exit as it exits into the pool. Bubble at vent exit expands to suppression pool hydrostatic pressure, as the air/steam mixture flow continues from the pressurized drywell. The water ligament above the expanding bubble is accelerated upward which gives rise to pool swell phenomena lasting, typically for a couple of seconds. During this pool swell phase, the wetwell region is subjected to:

(a) loads on suppression pool boundary and drag loads on structures initially submerged in the pool

(b) loads on wetwell gas space

(c) impact and drag loads on structures above the initial pool surface

The CO period of a postulated LOCA follows the pool swell transient period. During the CO period the steam condensation process at the vent exit induces periodic transient loads on the suppression pool boundary and structures initially submerged in the pool. Figure 6.2-43 shows a typical CO loading condition.

The CH period of a postulated LOCA follows the CO period, and it occurs during periods of low vent steam mass flux. During the chugging period the steam condensation process at the vent exit imposes loads on the suppression pool boundary and structures initially submerged in the pool. Figure 6.2-44 shows a typical CH loading condition.

6.2.1.1.6.2 SRV Actuation Loads

During the actuation of SRV, air (initially contained in the SRV discharge line) after it exits into the suppression pool and oscillates as Rayleigh bubble while rising to the pool free surface. The oscillating air bubble produces hydrodynamic loads on the pool boundary and drag loads on structures submerged in the pool. After the air has been expelled, steam exits steadily and condenses in the pool. This condensing steady SRV steam flow has been found to produce negligible loading on the pool boundary. Figure 6.2-45 shows a typical graphical representation of the dynamic loading due to SRV actuation.

6.2.1.1.7 Asymmetric Loading Conditions

Asymmetric loads are included in the load combination specified in Subsections 3.8.1.3, 3.8.2.3 and 3.8.3.3. The containment and internal structures are designed for these loads within the acceptance criteria specified in Subsections 3.8.1.5, 3.8.2.5 and 3.8.3.5. Since internal structures are not subject to external design or tornado winds, they are not designed for these loads.

Localized pipe forces, pool swell and SRV actuation are asymmetric pressure loads which act on the containment and internal structure (see Subsection 6.2.1.1.5 for magnitudes of pool swell and SRV loads).

The loads associated with embedded plates are concentrated forces and moments which differ according to the type of structure or equipment being supported. Earthquake loads are inertial loads caused by seismic accelerations. The magnitude of these loads is discussed in Section 3.7.

6.2.1.1.8 Containment Environment Control

The drywell ventilation system maintains temperature, pressure and humidity in the containment and its subcompartments at the normal design conditions. The safety-related containment heat removal systems described in Subsection 6.2.2 maintain required containment atmosphere conditions during accidents. Since the loss of the drywell ventilation system does not result in exceeding the design environmental conditions for the safety-related equipment inside the containment, the drywell system is not classified as safety-related.

6.2.1.1.9 Post-Accident Monitoring

Refer to Subsections 6.2.1.7, 7.2, 7.3, 7.5, and 7.6.1 for discussion of instrumentation inside the containment which may be used for monitoring various containment parameters under post-accident conditions.

6.2.1.1.10 Severe Accident Considerations

6.2.1.1.10.1 Overall Containment Performance

The containment structure provides for holdup and delay of fission product release should a core damage event occur. Core damage can only occur when all sources of core cooling are lost. Containment leakage during a severe accident is expected to be the same magnitude as the allowable containment leakage.

Long term containment pressurization is governed by the generation of decay heat and non-condensable gases. The primary source of non-condensable gas generation is metal-water reaction of the zirconium in the core. Non-condensable pressure buildup is accommodated by a relatively large containment volume and a high containment pressure capability. The steam produced by decay heat is absorbed in the suppression pool resulting in a very slow containment pressurization and ample time for fission product removal.

The limiting pressure bearing structure in the containment boundary is the drywell head. The Service Level C drywell head allowable pressure is 666.9 kPaG. This pressure capability is adequate to withstand the non-condensable gasses generated by reacting 100% of the zirconium in the active fuel region of the core with water. The median ultimate strength of the containment is 921.8 kPaG. Ultimate strength capability is important for very rapid containment challenges such as direct containment heating and rapid steam generation. Evaluation of both of these phenomena indicate early containment failure is unlikely. Containment failure due to slower pressurization challenges are largely prevented by the Containment Overpressure Protections System as described in Subsection 6.2.5.2.6.

6.2.1.1.10.2 Inerted Containment

One of the important severe accident consequences is the generation of combustible gasses. Combustion of these gasses could increase the containment temperature and pressure. The containment will be inerted during operation to minimize the impact from the generation of these gasses.

6.2.1.1.10.3 Lower Drywell Design

The design details of the lower drywell are important in the containment response to a severe accident. The key features are as described below.

(1) Sacrificial Concrete

The floor of the lower drywell includes a 1.5 m layer of concrete above the containment liner. This is to ensure that debris will not come in direct contact with the containment boundary upon discharge from the reactor vessel. This added layer of concrete will protect the containment from possible early failure.

(2) Basaltic Concrete

The sacrificial concrete in the lower drywell will be a low gas content concrete. The selection of concrete type is yet another example of how the ABWR design has striven not only to provide severe accident mitigation, but to also address potential uncertainties in severe accident phenomena. Here, the uncertainty is whether or not the ex-vessel core debris can be cooled by flooding the lower drywell. For scenarios in which water in the lower drywell is unable to cool the core debris, the concrete type selected has approximately 4 weight percent calcium carbonate which will result in a very low gas generation rate. This translates into a long time to pressurize the containment. This is important because time is one of the key factors in aerosol removal.

(3) Pedestal

The pedestal is formed by two concentric steel shells with webbing between them. The space between the shells is filled with concrete. The thickness of the concrete between the shells is 1.64 m. A parametric study of core concrete interaction was performed which indicated a very small potential for pedestal failure in the event of continued interaction. Furthermore, any potential failure will not occur for approximately one day.

(4) Sump Protection

The lower drywell sumps are protected by corium shields such that core debris will not enter them. This maximizes the upper surface area between the debris and the water and maximizes the potential to quench the core debris. The shields are made of alumina which is impervious to chemical attack from core-concrete interaction. The walls of the floor drain sump shield have channels which permit water flow, but which will not permit debris flow. The equipment drain sump shield has no such channels. The height and depth of the shields has been specified to ensure the debris will not enter the sumps in the long term. Further discussion of the corium shields may be found in Subsection 6.2.1.1.10.4.

(5) Floor Area

The floor area of the lower drywell has been maximized to improve the potential for debris cooling. The lower drywell floor has an area of 79 m^2 available for core debris

spreading which meets the ALWR Utility Requirements Document criterion of 0.02 m^2/MWt.

There may be a limited amount of metallic structures in this area, but this will not limit debris spreading or coolability due to the relatively low melting point of metals and their high thermal conductivity.

(6) Wetwell-Drywell Connecting Vents

The flow area between the lower and upper drywell is adequate to allow venting of gases generated in the lower drywell. The connecting vents flow area is 11.25 m^2. This is important when considering the steam generation rates associated with fuel-coolant-interactions in the lower drywell.

The presence of a significant amount of water in the lower drywell prior to a presumed vessel failure could lead to an increased risk of a steam explosion. After core debris enters the lower drywell, overflow of the suppression pool can prevent or mitigate core-concrete interaction. The interconnection between the lower drywell and the wetwell is at elevation -4.55 m, 8.6 m above the floor of the suppression pool. Thus, approximately 7.2E5 kg of water must be added from outside the containment for the suppression pool to overflow into the lower drywell.

The path from the lower to the upper drywell includes several 90 degree turns. This tortuous path enables core debris to be stripped from the gas flow prior to transport into the upper drywell minimizing the consequences from high pressure melt ejection. Also important when considering high pressure core melt scenarios, the configuration of the connecting vents will result in the transport of some core debris directly into the suppression pool. This is preferable to transport into the upper drywell and would result in the debris being quenched with only a slight increase in the suppression pool temperature.

(7) Solid Vessel Skirt

The vessel skirt does not have any penetrations which would allow the flow of water from the upper drywell directly to the lower drywell. This, in combination with the other design feature described above, ensures a very low probability that water is in the lower drywell before the time of vessel failure. Thus, large scale fuel-coolant interactions are precluded.

6.2.1.1.10.4 Corium Shield

During a hypothetical severe accident in the ABWR, molten core debris may be present on the lower drywell floor. The EPRI ALWR Requirements Document specifies a floor area of at least 0.02 m^2/MWt to promote debris coolability. This has been interpreted in the ABWR design as a requirement for an unrestricted LD floor area of 79 m^2.

The ABWR has two drain sumps in the periphery of the LD floor which could collect core debris during a severe accident if ingression is not prevented. If ingression occurs, a debris bed will form in the sump which has the potential to be deeper than the bed on the LD floor. Debris coolability becomes more uncertain as the depth of a debris bed increases.

The two drain sumps have different design objectives. One, the floor drain sump, is designed to collect any water which falls on the LD floor. The other, the equipment drain sump, collects water leaking from valves and piping. Both sumps have pumps and instrumentation which allow the plant operators to determine water leakage rates from various sources. Plant shutdown is required when leakage rate limits are exceeded for a certain amount of time. A more complete discussion on the water collection system can be found in Subsection 5.2.5.

A protective layer of refractory bricks — a corium shield — will be built around the sumps to prevent corium ingression. The shield for the equipment drain sump (EDS) is solid except for the inlet and outlet piping which goes through its roof. The shield for the floor drain sump(FDS) is similar except that it has channels at floor level to allow water which falls onto the LD floor to flow into the sump. The length of the channels will be long enough so that any molten debris which reaches the inlet will freeze before it exits and spills into the sump. The width and number of the channels will be chosen so that the required water flow rate during normal reactor operation is achievable.

The solid walls of the sump shields only have to be thick enough to withstand ablation, if any is expected to occur for the chosen wall material. The walls of the FDS shield with channels in them must be thicker so that molten debris flowing through the channels has enough residence time to ensure debris solidification.

Both shields extend above the LD floor to an elevation greater than the expected maximum height of core debris. Thus, no significant amount of debris will collect on the shield roofs. The walls of both shields extend below the LD Floor to prevent debris from tunneling under the walls and entering the sumps.

Both shields have provisions in their roofs to allow water to flow into the sumps when the lower drywell is flooded. The provisions are located next to the pedestal wall so that the debris which relocates from the vessel can not directly enter the sumps due to geometrical constraints. Additionally, the provision for the roof of the EDS shield wall not affect the normal water collection capabilites of the EDS.

To prevent the debris which falls on the lower drywell floor from directly entering the FDS shield, the channels in the FDS shield are in the walls which face away from the center of the lower drywell. The FDS shield wall which faces the center of the lower drywell is solid and does not contain any channels.

6.2.1.1.10.4.1 Success Criteria

The shield walls must satisfy the following requirements:

(1) Melting Point of Shield Material Above Initial Contact Temperature

The shield wall material will have a melting temperature that is greater than the interface between the debris and the shield wall.

(2) Channel Length

The length of the channels in the FDS shield must be long enough to ensure that a plug forms in the channel before debris spills into the sump. The freezing process is expected to take on the order of seconds or less to complete.

(3) Shield Height Above Lower Drywell Floor

The shield height above the lower drywell floor ensures long term debris solidification and prevents debris from collecting on top of the shields. The freezing process will be complete during the time frame when the shield walls are behaving as semi-infinite solids.

(4) Shield Depth Below Lower Drywell Floor

The shield walls extend to the floors of the sumps to prevent tunneling of debris into the sumps.

(5) Chemical Resistance of Shield Walls

The wall material chosen for the corium shields must have good chemical resistance to siliceous slags and reducing environments. Resistance can be determined to a first degree by comparing the Gibb's free energy of the oxides which make up the shield wall and the oxides present in core debris.

(6) Channel Flow Area

The total flow area of the shield channels shall be great enough to allow water flow rates stated in the Technical Specifications without causing excessive water pool formation in the lower drywell.

(7) Seismic Adequacy

The seismic adequacy of the corium shields will be determined in the detailed design phase. Adequacy should be easily met because the shields are at the lowest point in the containment. Missile generation is not an issue because the shields are not near any vital equipment.

(8) Channel Height

The channel height is small enough to ensure freezing.

6.2.1.1.10.4.2 Corium Shield Design

The corium shields are constructed of alumina. The height of the shields above the floor is 0.4m. The floor drain sump has channels 1 cm high. The channel length must be at least 0.5 m. The channel walls extend to the floor of the sumps.

6.2.1.1.10.4.3 Design Evaluation

Alumina has a melt point which is greater than the contact temperature of the core debris. It is resistant to reduction reactions with the metals which make up core debris. The height of the shields meets the requirements to ensure long term debris solidification and to prevent material from accumulating on the roof of the shields. Similarly, the depth of the channeled wall will ensure long term debris solidification. The height and length of the channel for the floor drain sump will ensure debris freezing.

The details of the analyses leading to these conclusions may be found in Attachment 19ED.

6.2.1.2 Containment Subcompartments

6.2.1.2.1 Design Bases

The design of the containment subcompartments is based upon the postulated DBA occurring in each subcompartment.

For each containment subcompartment in which high-energy lines are routed, mass and energy release data corresponding to a postulated double-ended line break are calculated. The mass and energy release data, subcompartment free volumes, vent path geometry and vent loss coefficients are used as input into an analysis to obtain the pressure/temperature transient response for each subcompartment.

6.2.1.2.2 Design Features

The upper drywell, lower drywell and wetwell subcompartment volumes are covered in depth in Subsection 6.2.1.1. The remaining containment subcompartment volumes are:

(1) **Drywell Head Region**—The drywell head region is covered with a removable steel head which forms part of the containment boundary. The drywell bulkhead connects the RPV flange to the containment and represents the interface between the drywell head region and the drywell.

The DBA for the drywell head region is the double-ended circumferential break of the 150A RPV head spray line of the CUW System at the connection to the RPV head nozzle. The other high-energy line in the drywell head region is the 50A main steam

vent line. The RPV head spray line is chosen as the DBA for this subcompartment due to the higher mass and energy release rates from a postulated break of this line.

(2) **Reactor Shield Annulus**—The reactor shield annulus exists between the reactor shield wall (RSW) and the RPV. The RSW is a concrete cylinder surrounding the RPV. The reactor shield wall is supported by the reactor pedestal and extends to a height 0.1m below the containment top slab.

Several high-energy lines (such as, main steam lines, feedwater lines, RHR shutdown cooling suction lines, HPCF and LPFL injection lines, etc.) connect to the RPV and extend through the reactor shield wall. There are penetrations for other piping, vents and instrumentation lines and personnel access holes in the shield wall.

In order to determine transient pressure loading inside the annulus for structure design evaluation, a double-ended pipe break in high-energy lines at vessel nozzle safe end inside the annulus was postulated. A double-ended pipe break at the RHR shutdown cooling suction nozzle (representing a flow area of about 750 cm^2) was determined to be the DBA for the reactor shield annulus sub-compartment pressurization. This break type resulted in the largest mass and energy blowdown inside the annulus. No main steam line break inside the annulus was postulated, because the RPV steam outlet nozzle safe end connection to the main steam line is outside the annulus region.

Transient pressure loading condition inside the annulus due to the DBA pipe break was determined. The total venting flow area from the annulus region to the outside drywell region which was assumed and used in this calculation, comprised of

(a) the annular clearance area due to the 0.1m clearance between the top of the shield wall and containment top slab, and

(b) the combined area of penetration door openings.

6.2.1.2.3 Design Evaluation

The reactor shield wall structure, and the reactor pressure vessel and its internals design considered and accounted for the transient pressure loads due to the DBA pipe break inside the reactor shield annulus.

6.2.1.3 Mass and Energy Release Analyses for Postulated Loss-of-Coolant Accidents

The environmental conditions created by any high-energy line break (HELB) are analyzed according to Regulatory Guide 1.89. The first step in such analysis is to calculate the mass and energy release rate from the high-energy line break (HELB).

Figure 6.2-22 shows the break flow rate and specific enthalpy for the feedwater line break flow coming from the feedwater system side. Figure 6.2-23 shows the same information for the

feedwater line break flow coming from the RPV. Figures 6.2-24 and 6.2-25 show the same information for the main steamline break flow with two-phase blowdown starting when the collapsed water level reaches the main steamline nozzle and when t = 2.0 seconds.

When the break size is small and the reactor pressure stays at approximately 7.31 MPaG, the critical flow table (such as in Reference 6.2-2) may be used. If the long-term performance is required or the break size is in the intermediate break range, then the reactor pressure does not stay constant. In this case, the transient is analyzed by using GEH-developed computer codes to determine the mass and energy release rate based on References 6.2-1, 6.2-2 and 6.2-3.

6.2.1.4 Mass and Energy Release Analysis for Postulated Secondary System Pipe Ruptures Inside Containment (PWR)

Not Applicable

6.2.1.5 Maximum Containment Pressure Analysis for Performance Capability Studies on Emergency Core Cooling System (PWR)

Not Applicable

6.2.1.6 Testing and Inspection

6.2.1.6.1 Preoperational Testing

Preoperational testing and inspection programs for the containment and associated structures, systems and components are described in Subsections 3.8.1.7, 3.8.2.7, 3.8.3.7, 6.2.6 and Chapter 14. These programs demonstrate the structural integrity and desired leaktightness of the containment and associated structures, systems, and components.

6.2.1.6.2 Post-Operational Leakage Rate Test

For descriptions of the containment integrated leak rate test (ILRT) and other post-operational leakage rate tests (10CFR50, Appendix J, Tests Type A and B), see Subsection 6.2.6.

Accessible portions of the WDVBS will be visually inspected at each refueling outage to determine that they are free of foreign debris. The maximum allowable leakage for each valve shall be per ASME OM Code, Appendix I of 10CFR50.

6.2.1.6.3 Design Provisions for Periodic Pressurization

In order to assure that the containment can withstand the application of peak accident pressure at any time during plant life, for the purpose of performing integrated leakage rate tests, close attention has been given to certain design and maintenance provisions. Specifically, the effects of corrosion on the structural integrity of the containment have been minimized by the use of stainless steel liner in the suppression pool area. Other design features which have the potential to deteriorate with age, such as flexible seals, will be carefully inspected and tested as outlined

above. In this manner, the structural and leak integrity of the containment will remain essentially the same as originally accepted.

6.2.1.7 Instrumentation Requirements

Instrumentation is provided to monitor the following containment parameters:

(1) Drywell temperature

(2) Drywell pressure

(3) Differential pressure both drywell-to-wetwell and drywell-to-Reactor Building

(4) Drywell oxygen concentrations

(5) Drywell radiation levels

(6) Wetwell air space temperature

(7) Wetwell pressure

(8) Differential pressure between the wetwell and Reactor Building

(9) Wetwell oxygen concentrations

(10) Wetwell radiation levels

(11) Suppression pool temperature

(12) Suppression pool level

(13) Separate inerting flow indication to both the drywell and wetwell

(14) Drywell pressure and nitrogen makeup flow monitoring and recording

(15) Wetwell nitrogen makeup flow

(16) Open/close position indicators for wetwell-to-drywell vacuum breaker valves, and alarm in control room.

Drywell pressure is an input to containment isolation, ADS, HPCF, RCIC, RHR Division A, B and C initiation logic. The logic circuitry is located in the control room. Pressure indicators for both the drywell and wetwell are part of the containment inerting system, which maintains containment at a pressure higher than the secondary containment pressure.

Wetwell-to-drywell differential pressure is monitored for proper functioning of the WDVBS.

Drywell space temperatures are inputs to the Leak Detection and Isolation System (LDS). Thermocouples are mounted at appropriate elevations of the drywell to monitor the drywell temperatures. Temperature, pressure and radiation are monitored for environmental conditions of equipment in the containment during normal, abnormal and accidental conditions.

Four suppression pool-level sensors are provided in the suppression pool water for hi-lo level alarms. Suppression pool temperature readouts from the immersed temperature sensors and alarms are located in the control room. The sensors are divided into subgroups for normal indications as an input to RHR initiation logic and for post-LOCA pool monitoring.

Two oxygen analyzers are provided for the drywell, and two for the wetwell. Each analyzer draws a sample from an appropriate area of the drywell or wetwell. Oxygen concentration alarms and recorders are located in the control room.

Radiation detectors in the drywell and wetwell areas provide inputs to the radiation monitors, recorders and high level alarms located in the control room.

Refer to Section 7.2 for a description of drywell pressure as an input to the Reactor Protection System, and Section 7.3 for a description of drywell pressure, wetwell-to-drywell differential pressure and suppression pool level as inputs to the ESF systems. Suppression pool temperature monitoring, drywell temperature monitoring and inerting flow indication and makeup flow monitoring and recording are discussed in Section 7.6. The display instrumentation for all containment parameters, including the number of channels, recording of parameters, instrument range and accuracy and post-accident monitoring equipment, is discussed in Section 7.5.

Containment design features as related to debris formation have an important relationship to the ECCS's ability to provide containment cooling. A primary source of debris in containment is the thermal insulation. If insulation is dislodged and enters the wetwell, it can cause plugging of the ECCS suction strainers, which can impede ECCS performance and containment cooling.

The ABWR design includes the necessary provisions to prevent debris from impairing the ability of the RCIC, HPCF, and RHR systems to perform their required post-accident functions. Specifically, the ABWR does the following:

(1) The design is resistant to the transport of debris to the suppression pool.

(2) The SPCU system will provide early indication of any potential problem.

(3) The ECCS suction strainers meet the current regulatory requirements unlike the strainers at the incident plants.

(4) The equipment installed in the drywell and wetwell minimize the potential for generation of debris.

In addition to the ABWR design features, the control of the suppression pool cleanliness is a significant element of minimizing the potential for strainer plugging. The COL applicant will review the issue of maintaining the suppression pool cleanliness, and propose to the NRC Staff an acceptable method for assuring that the suppression pool cleanliness is maintained. Methods shall be considered for removing, at periodic intervals, sediment and floating or sunk debris from the suppression pool that the SPCU does not remove. See Subsection 6.2.7.3 for COL license information.

Refer to Appendix 6C for additional information on ABWR design features.

6.2.2 Containment Heat Removal System

6.2.2.1 Design Bases

The Suppression Pool Cooling mode and the wetwell and drywell spray features of the Containment Heat Removal System (CHRS)are integral parts of the RHR System. The purpose of the CHRS is to prevent excessive containment temperatures and pressures, thus maintaining containment integrity following a LOCA. To fulfill this purpose, the CHRS meets the following safety design bases:

(1) The system limits the long-term bulk temperature of the suppression pool to 97.2°C when considering the energy additions to the containment following a LOCA. These energy additions, as a function of time, are provided in the previous section.

(2) The single-failure criterion applies to the system.

(3) The system is designed to safety grade requirements, including the capability to perform its function following a safe shutdown earthquake (SSE).

(4) The system maintains operation during those environmental conditions imposed by the LOCA.

(5) Each active component of the system is testable during normal operation of the nuclear power plant.

6.2.2.2 Containment Cooling System Design

The Containment Cooling System (CCS) encompasses several of the RHR operating modes, including the Low Pressure Flooder (LPFL) mode, the Suppression Pool Cooling (SPC) mode, and the Containment Spray modes (drywell and wetwell). Containment cooling starts as soon as the LPFL injection flow begins. The SPC mode cools the containment. The containment sprays cool the drywell and wetwell by condensing steam and the condensate running back into the suppression pool. All water that leaves the suppression pool is cooled by the RHR heat exchangers during the three operational modes indicated above. For each of the three loops, water is drawn from the suppression pool, pumped through an RHR heat exchanger and injected into the reactor vessel for the LPFL mode. Also, for each of the three loops of the SPC mode,

water is drawn from the suppression pool, pumped through an RHR heat exchanger and delivered to the suppression pool. On two of the loops (B&C), a portion of the water returned to the suppression pool may be passed through wetwell spray headers. These two loops also have a manual feature for providing drywell spray. Water from the RCWS is pumped through the heat exchanger shell side to exchange heat with the processed water. Three cooling loops are provided, each being mechanically and electrically separate from the other to achieve redundancy. A piping and instrumentation diagram (P&ID) is provided in Section 5.4. The process diagram, including the process data, is provided for all design operating modes and conditions.

All portions of the CCS mode are designed to withstand operating loads and loads resulting from natural phenomena. All operating components can be tested during normal plant operation so that reliability can be assured. Construction codes and standards are covered in Subsection 5.4.7.

The LPFL mode is automatically initiated from ECCS signals or manually initiated. The SPC mode is started manually or automatically. The RHR System must be realigned for suppression pool cooling by the plant operator after the reactor vessel water level has been recovered. The RHR pumps are already operating. Suppression pool cooling is initiated in any of the three loops by manually closing the LPFL injection valve and opening the pool return valve. For automatic initiation of suppression pool cooling, all three RHR loops are initiated. In the event that a single failure has occurred, and the action which the plant operator is taking does not result in system initiation, then the operator will place the other totally redundant system into operation by following the same initiation procedure. If the operator chooses to utilize the containment sprays, he must close the LPFL injection valves and open the spray valves. The drywell spray mode may be initiated manually only after a high drywell pressure permissive occurs.

Preoperational tests are performed to verify individual component operation, individual logic element operation, and system operation up to the containment spray spargers. A sample of the sparger nozzles is bench tested for flow rate versus pressure drop to evaluate the original hydraulic calculations. Finally, the spargers are tested by air and visually inspected to verify that all nozzles are clear (see Subsection 5.4.7.4 for further discussion of preoperational testing).

6.2.2.3 Design Evaluation of the Containment Cooling System

6.2.2.3.1 System Operation and Sequence of Events

In the event of the postulated LOCA, the short-term energy release from the reactor primary system will be dumped to the suppression pool. Subsequent to the accident, fission product decay heat will result in a continuing energy input to the pool. The RHR SPC mode will remove this energy which is released into the primary containment system, thus resulting in acceptable suppression pool temperatures and containment pressures.

In order to evaluate the adequacy of the RHR System, the following is assumed:

(1) With the reactor initially operating at 102% of rated power, a LOCA occurs.

(2) A single failure of a RHR heat exchanger is the most limiting single failure.

(3) The ECCS flows assumed available are 2 HPCF, 1 RCIC, and 2 LPFL (RHR).

(4) Containment cooling is initiated after 30 minutes. This is a conservative assumption given that the RHR system design provides pool cooling during the LPFL mode of RHR which, for a large pipe break, can occur in 3 to 5 minutes.

Analysis of the net positive suction head (NPSH) available to the RHR and HPCF pumps in accordance with the recommendations of Regulatory Guide 1.1 is provided in Tables 6.2-2b and 6.2-2c, respectively.

General compliance for Regulatory Guide 1.26 may be found in Subsection 3.2.2.

6.2.2.3.2 Summary of Containment Cooling Analysis

When calculating the long-term post-LOCA pool temperature transient, it is assumed that the initial suppression pool temperature and the RHR service water temperature are at their maximum values. This assumption maximizes the heat sink temperature to which the containment heat is rejected and thus maximizes the containment temperature. In addition, the RHR heat exchanger is assumed to be in a fully fouled condition at the time the accident occurs. This conservatively minimizes the heat exchanger heat removal capacity. Even with the degraded conditions outlined above, the maximum temperature is maintained below the design limit specified in Subsection 6.2.2.1.

It should be noted that, when evaluating this long-term suppression pool transient, all heat sources in the containment are considered with no credit taken for any heat losses other than through the RHR heat exchanger. These heat sources are discussed in Subsection 6.2.1.1.3.

It can be concluded that the conservative evaluation procedure described above clearly demonstrates that the RHR System in the SPC mode limits the post-LOCA containment temperature transient.

6.2.2.3.3 Severe Accident Considerations

The containment spray features of the RHR System can reduce the amount of radioactive material released to the environment in the event core damage occurs. The benefits provided by the sprays are condensing steam, scrubbing of fission products in the containment airspace, and supplying water to ex-vessel core debris. The conditions for activation of the containment sprays are described in the Emergency Procedure Guidelines in Appendix 18A.

The water sprayed into the upper drywell absorbs heat from the RPV outer surfaces and the debris which relocates into the upper drywell, if any, upon vessel failure at high pressure. Cooling of the upper drywell prevents any potential for overtemperature failure of seals in the large operable penetrations (e.g., the drywell head, equipment hatches and personnel airlocks). Water which collects on the upper drywell floor is directed into the wetwell through the connecting vents.

The containment sprays provide significant mitigation of suppression pool bypass. The incoming water absorbs heat and condenses steam. While the heat absorption is not as efficient nor as extensive as what would occur if the suppression pool was not bypassed, the time to Containment Overpressure Protection System (COPS) activation or containment failure can be delayed significantly. This delay results in a significant reduction in the radioactive release due to fission product decay.

The water sprayed into the containment also scrubs fission products which are in the containment airspace. Scrubbing reduces the amount of radioactive material which is available for release from the containment.

6.2.2.4 Test and Inspections

The Containment Cooling System (CCS) is required to have scheduled maintenance. The system testing and inspection will be performed periodically during the plant normal operation and after each plant shutdown. Functional testing will be performed on all active components and controls. The system reference characteristics will be established during preoperational testing to be used as base points for checking measurements obtained from the system tests during the plant operation.

The preoperational test program of the CCS is described in Subsection 14.2.12. The following functional tests will be performed. The RHR pump will be tested through the suppression pool cooling loop operation by measuring flow and pressure. Each pump will be tested individually.

Containment spray spargers will be tested during reactor shutdown by air, and by visual inspection to verify that all the nozzles are clear. RHR heat exchangers will be checked for effectiveness by measuring inlet and outlet temperatures at the tube and shell sides.

All motor- and air-operated valves required for safety are capable of being exercised and their operation demonstrated. The layout and arrangement of critical equipment outside the drywell is designed to permit access for appropriate equipment used in testing and inspecting system integrity. Relief valves on the low pressure lines are removable for testing.

Periodic inspection and maintenance of the main system pumps, pump motors, and heat exchangers are conducted in accordance with the manufacturer’s instructions.

During the normal plant operation, the pumps, heat exchangers, valves, piping, instrumentation, wiring and other components outside the containment can be inspected visually at any time.

Testing frequencies are generally correlated with testing frequencies of the associated controls and instrumentation. When a pump or valve control is tested, the operability of that pump or valve and its associated instrumentation is tested by the same action. When a system is tested, operation of the components is indicated by installed instrumentation. Relief valves are removed as scheduled at refueling outages for bench tests and setting adjustment.

6.2.2.5 Instrumentation Requirements

Details of the instrumentation are provided in Section 7.3. The SPC mode of the RHR System is manually or automatically initiated.

6.2.3 Secondary Containment Functional Design

The secondary containment boundary, as shown in Figure 6.2-26, completely surrounds the primary containment vessel (PCV) except for the basemat and, together with the clean zone, comprises the Reactor Building. The secondary containment encloses all penetrations through the primary containment and all those systems external to the primary containment that may become a potential source of radioactive release after an accident. During normal plant operation, the secondary containment areas are kept at a negative pressure with respect to the environment and clean zone by the HVAC System. Following an accident, the Standby Gas Treatment System (STGS) provides this function. These systems are described in Subsections 9.4.5 and 6.5.1, respectively.

Fission products that may leak from the primary to secondary containment are processed by the SGTS before being discharged to the environment. The HVAC exhaust systems and SGTS are located within the secondary containment to assure collection of any leakage. The secondary containment provides detection of the level of radioactivity released to the environment during abnormal and accident plant conditions. Personnel or material entrances to the secondary containment consist of airlocks with interlocked doors or hatches.

There are basically three types of potential leakage paths for the release of fission product during and following an accident. These leakage paths are shown in Figure 6.2-27. Potential leak paths that can bypass the secondary containment are shown in Table 6.2-10.

6.2.3.1 Design Bases

(1) Secondary containment is provided to collect fission products which may leak from the primary containment following a DBA. This collection allows filtration by the SGTS prior to release to the environment. The secondary containment region completely surrounds the primary containment vessel.

(2) During a DBA, the secondary containment and supporting systems such as the SGTS, is designed to limit the thyroid and whole body doses to less than 10CFR100 guidelines at the site boundary and low population zone and to less than 10CFR50 Appendix A, General Design Criterion 19, doses for the control room operator.

(3) The mechanical, electrical, instrumentation, and structural components of the secondary containment design are protected, as necessary, from internally- and externally-generated missiles, dynamic effects associated with pipe whip and jet forces, and environmental conditions from an accident, and are designed to Seismic Category I requirements. These items and equipment of supporting systems required to function after an accident are designed for single active failure, loss of offsite power (LOOP) coincident with an accident, 30-day accident duration for radiological analysis and 100-day duration for operational capability. No credit is assumed for non-Seismic Category I piping, power supplies and equipment.

(4) The design allowable inleakage at the secondary containment-environs boundary is within the capability of the SGTS to maintain the pressure inside secondary containment at –6.4 mm water gauge relative to the environs, under design exterior wind conditions. This prevents exfiltration such that 10CFR100 guidelines will not be exceeded following a DBA.

Post-accident pressure transients do not cause 10CFR100 guidelines to be exceeded because of exfiltration.

(5) Automatic shutoff of the normal HVAC air supply and ventilation exhaust and of other systems after a LOCA or on detection of high radiation in effluent prevents airborne leakage from escaping the secondary containment.

(6) All openings through the secondary containment boundary, such as personnel and equipment doors, remain closed after a DBA by interlocks or administrative control. These doors are provided with position indicators and alarms having readout and annunciation capability in the control room.

(7) Liquid leakage from the secondary containment to the clean zone or to the environment is controlled by means of water loop seals, automatic shutoff valves in series, or piping upgrade to safety class.

(8) All operating systems that transport liquid from the secondary containment to the clean zone or the environment are automatically isolated during an accident. These systems cannot be automatically initiated following an accident.

(9) The exhaust unit of the secondary containment HVAC maintains the secondary containment air flow pattern from areas of normally low contamination to those with a potentially high level.

(10) High-energy pipe breaks within the secondary containment are detected by the Leak Detection and Isolation System (LDS). Blowout panels are provided where necessary to relieve the thermal and pressure buildup in the various subcompartments.

(11) All effluents from the secondary containment areas are monitored for gamma radiation level prior to being released to the environment.

(12) Adequate instrumentation and control room indications are provided to monitor all important secondary containment parameters in order to maintain the plant within the Technical Specification limits and provide information for operator actions.

(13) The secondary containment, in conjunction with supporting systems, will be periodically tested to assure that performance requirements can be met.

6.2.3.2 System Design

The secondary containment is a reinforced concrete building that forms an envelope surrounding the PCV above the basemat. The secondary containment has isolation systems on piping, doors and other penetrations. This permits maintaining the secondary containment volume at a slightly negative pressure so all PCV leakage can be collected and treated before release. Details of structural design and arrangement of compartments for various systems are described in Section 3.8.

The boundary of the secondary containment is shown in the following figures:

6.2-28 Containment Boundaries in the Reactor Building-Plan Section A-A(0–180°)

6.2-29 Containment Boundaries in the Reactor Building-Plan Section B-B(90°–270°)

6.2-30 Containment Boundaries in the Reactor Building-Plan at El –8200 mm

6.2-31 Containment Boundaries in the Reactor Building-Plan at El –1700 mm

6.2-32 Containment Boundaries in the Reactor Building-Plan at El –4800/8500 mm

6.2-33 Containment Boundaries in the Reactor Building-Plan at El 12300 mm

6.2-34 Containment Boundaries in the Reactor Building-Plan at El 18100 mm

6.2-35 Containment Boundaries in the Reactor Building-Plan at El 23500 mm

6.2-36 Containment Boundaries in the Reactor Building-Plan at El 31700 mm

Secondary containment design and performance data are provided in Table 6.2-2d.

During normal operation, the secondary containment system is operated at a slightly negative pressure relative to the atmosphere. This assures that any leakage from the primary containment will be collected and can be treated before release if its radioactivity level is above prescribed limits. The secondary containment HVAC System operates on a feed-and-bleed principle with internal recirculation. Air flow is from clean to potentially contaminated areas.

The building effluents are monitored for radioactivity by the Area Radiation Monitoring System (ARMS). If the radioactive level rises above set levels, the secondary containment discharge can be routed through the SGTS for treatment before release. The operation of the secondary containment SGTS and HVAC are discussed in detail in Subsections 6.5.1 and 9.4.5, respectively.

During normal operation, the secondary containment is the envelope that forces collection of airborne radioactive material from fuel storage pools, CUW, FPCCU, SPCU and other potentially radioactive sources in the secondary containment. The HVAC exhaust systems and SGTS are also located within the secondary containment to assure collection of any leakage. The RHR and HPCF pump seals and valve packings and RCIC System components are a potential source of radioactive release and are located within the secondary containment.

During refueling operations, the drywell head is removed and the secondary containment becomes the containment envelope. Therefore, entry into the secondary containment is provided via double door vestibules or, in the case of the main equipment hatch, a double door entry. This assures the integrity of the secondary containment envelope with effluent monitoring and treatment of airborne radioactive material resulting from normal plant or refueling operations or from abnormal events such as a fuel drop accident.

The airborne fission product is contained by maintaining all portions of the secondary containment at a negative 6.4 mm of water gauge relative to the lowest pressure boundary outside the secondary containment. This negative pressure is achieved following an accident by the SGTS.

The airborne fission product leakage from the primary containment is processed by the SGTS. The SGTS achieves a 99.99% removal of halogen (stable and radioactive) and a 99.9% of airborne particulates prior to discharge to the environment. This removal efficiency will be periodically tested in accordance with regulatory requirements. The dose limit evaluation takes credit for 99% airborne halogen and particulates for this type of leakage. A 99% removal credit is allowed even though the design will achieve 99.99% removal capability.

The SGTS will maintain the secondary containment air flow pattern from potentially low to high level contaminated areas. The potentially high level contaminated areas are the following:

(1) CUW System Rooms

(2) RCIC System Room

(3) HPCF System Rooms

(4) Fuel Pool Cooling and Cleanup System Rooms

(5) RHR System Rooms

(6) Suppression Pool Cleanup System Rooms

(7) SGTS Filter Compartments

(8) Spent Fuel Storage Pool

The liquid leakage from the secondary containment to the clean zone or the environment is controlled, as required, by means of water loop seals, automatic shutoff valves in series, or piping upgrade to safety class. All system operations that transport liquid from the secondary containment to the clean zone or to the environment will be automatically shut off during an accident and not be automatically initiated following an accident.

A postulated high-energy pipe break in the secondary containment is accommodated so as not to exceed the environmental qualification limits of the equipment required for plant shutdown. Blowout panels are installed as required in rooms where high-energy pipe breaks are postulated, and the panels relieve the thermal temperature and pressure buildup in the room.

High-energy pipe breaks in the secondary containment will cause a failure to maintain negative pressure in the secondary containment. This is acceptable, since there is no significant release of radioactivity from this accident event because fuel is not damaged and the plant is shut down promptly.

All effluents processed by the STGS from the secondary containment areas are monitored for gamma radiation level prior to their release to the environment.

The ECCS, RCIC, CUW, FPCCU and SPCU System rooms of the secondary containment collect throughline leakage of fission products. The pump rooms are of reinforced concrete construction (see Subsection 3.8.4 for design details). Following accidents which require secondary containment integrity (i.e., do not open the blowout panels to the steam tunnel), the normal room ventilation subsystems are isolated and the SGTS begins to exhaust the air (through its filter) from the rooms, maintaining the pressure at –6.4 mm water gauge or less with respect to the environs. No mixing of fission products with the room volumes is assumed.

High-energy pipe breaks in the secondary containment compartments do not require secondary containment integrity. Following breaks of this type, pressure will be relieved by blowout vent openings and panels within the secondary containment or to the steam tunnel and Turbine Building.

The fuel storage and handling areas are part of secondary containment, where throughline leakage of fission products is collected. These areas are constructed of reinforced concrete (see Subsection 3.8.4 for design details). The secondary containment boundaries are the concrete walls and ceiling of the refueling floor and the stainless steel-lined upper pool.

Following accidents requiring secondary containment integrity, the normal Reactor Building (R/B) ventilation system is isolated, and the SGTS begins exhausting the secondary containment air. The SGTS thus maintains the pressure at –6.4 mm, or less with respect to the environs when the exterior wind speed is less than or equal to 6.2 km/h. (Above that wind speed, when exfiltration does occur, 10CFR100 guidelines will not be exceeded because of the increased atmospheric dispersion which may be assumed.) No mixing is assumed for fission products within the secondary containment volume. There are no high-energy lines in the fuel handling and storage areas, whose failure would result in pressurization or loss of secondary containment integrity.

Penetrations between secondary containment and the environs are of four different types:

(1) Piping penetrations

(2) Architectural openings (doors, hatches, and blowout panels)

(3) HVAC duct penetrations

(4) Electrical penetrations

Each of these categories is discussed below separately. Most piping which forms a part of the secondary containment boundary is designed to at least Seismic Category I and ASME Section III, Class 3 requirements. Some lines have no special isolation provisions and are not ASME Section III or Seismic Category I if an analysis shows that exfiltration would not occur in the event of failure of that pipe (i.e., the –6.4 mm water gauge pressure differential would be maintained).

For architectural openings, the inleakage is based on –6.4 mm water gauge pressure differential. All doors have a vestibule with a second (outer) door. HVAC and electrical penetrations are designed to minimize leaks, and the HVAC System is designed and tested for isolation under accident conditions.

Table 6.2-9 provides a listing of secondary containment openings. All piping and cable tray penetrations will be sealed with a sealing compound for leakage and fire protection. All doors are vestibule type with card reader access security systems that are monitored (Subsection

13.6.3.4). The HVAC penetrations are designed to close on a design basis accident (see Subsection 9.4.3 on R/B HVAC). The required testing procedure and frequency can be found in the plant Technical Specifications.

6.2.3.3 Design Evaluation

The design of the secondary containment boundaries is described in the preceding subsection. Evaluation of this design, such that all regulatory requirements are met, is given in the following subsections:

(1) 6.5.1 (Standby Gas Treatment System)

(2) 9.4.5 (Reactor Building HVAC System)

6.2.3.3.1 Compartment Pressurization

6.2.3.3.1.1 Design Bases

The design of secondary containment compartments with respect to pressurization due to a pipe rupture is based upon the worst-case DBA rupture of a high energy line postulated to occur in each compartment through which a high energy line passes (for details regarding the pipe rupture location and configuration, see Subsection 3.6.2). The pipe rupture producing the highest mass and energy release rate, in conjunction with a worst case single active component failure was chosen for the pressurization analysis of each component. For this analysis, a worst case single active component failure is defined as the failure to close an isolation valve which separates the reactor pressure vessel from the high energy pipe break in the secondary containment. The design pressure for the compartment structure design will include some margin over the calculated peak differential pressure. The design margin is intended to make allowance for changes (piping, equipment layout arrangement) in the as-built compartment design.

6.2.3.3.1.2 Design Features

The following paragraphs are brief descriptions of the compartments analyzed for pressurization. Figures 1.2-3 through 1.2-10 show compartment configurations, and component and equipment locations. The schematic layout of the compartments, with the interconnecting vent paths and blowout panels, which are modeled and analyzed for various line breaks are shown in Figures 6.2-37a through 6.2-37h.

6.2.3.3.1.2.1 Reactor Core Isolation Cooling (RCIC) Compartment

The RCIC compartment is located in the secondary containment at El –8200 mm, in the 0–90° quadrant of the R/B. The design basis break for the RCIC compartment is determined to be the single-ended break of the 150A steam supply line to the RCIC turbine. This line is a high-energy line out to the normally closed isolation valve inside the RCIC compartment. It supplies high-energy steam to the RCIC turbine in the event of reactor vessel isolation. In the event of a

postulated design basis high-energy line break (HELB), the steam/air mixture from that compartment is directed into adjoining compartments, corridors and stairways, and is eventually purged into the refueling floor connected to the outside atmosphere.

6.2.3.3.1.2.2 Reactor Water Cleanup (CUW) Equipment Rooms and Pipe Spaces

The CUW equipment (pump, heat exchanger, filter/demineralizer, valves) and pipe spaces are located in the 0 - 270 degree quadrant of the reactor building, with floor elevations ranging from elevation -8200 mm to elevation 12300 mm. The design basis pipe break for the CUW System compartment network is determined to be a 200 A double-ended break of the cleanup water suction line from the RPV. This high energy piping, which connects the CUW equipment, originates at the reactor pressure vessel. After being routed through the CUW System, this line is directed back to the RPV through special pipe spaces and the steam tunnel. In the event of a postulated design basis high energy line break in a compartment, the steam/air mixture from that compartment is directed into adjoining compartments, corridors and stairways, and eventually purged into the turbine building and refueling floor connected to the outside atmosphere.

6.2.3.3.1.2.3 Main Steam Tunnel

The Reactor Building main steam tunnel is located between the primary containment vessel and the Turbine Building at elevation 12300 mm and 0° azimuthal position. The DBA for the steam tunnel is the double-ended break of one of the 700A main steamlines. These lines originate at the RPV and are routed through the main steam tunnel to the Turbine Building. In the event of a postulated design basis HELB, the steam/air mixture from the main steam tunnel is purged into the Turbine Building.

6.2.3.3.1.3 Design Evaluation

The compartment response to the postulated high energy line break was calculated using the engineering computer program SCAM. A detailed discussion of methodology and assumptions used in this program can be found in Reference 6.2-4.

The initial conditions for the analysis include the assumption of 102% rated reactor power and the compartment pressures, temperatures and relative humidity as tabulated in Table 6.2-3. Blowout panels are used in place of open vent pathways when the environmental conditions of one compartment must be isolated from the environment in another compartment. The blowout panels are assumed to open fully against a differential pressure of 3.45 kPa, and are assumed to remain open.

For the postulated high energy line break, the blowdown mass and energy release rates from the break were determined using Moody's homogeneous equilibrium model for critical flow described in Reference 6.2-2. The blowdown mass and energy release rate for the postulated High Energy Line Break (HELB) in a given compartment compromised of initial inventory depletion followed by steady critical flow from the ruptured pipe. After the inventory depletion

period, break flow, limited by critical flow consideration, continues until the isolation valve is fully closed. Heat transfer between the flowing components and the subcompartment walls is neglected. This is a conservative assumption, since removal of heat would lower calculated pressures in the subcompartments.

The following paragraphs describe the key assumptions and calculation of mass and energy release rates for the postulated HELB in the RCIC, CUW and Main Steam Tunnel compartments.

6.2.3.3.1.3.1 RCIC Compartment

For RCIC a single-ended pipe break, as noted earlier, was postulated. The mass and energy blowdown release rate comprised only of flow from the RPV side. The flow from the other side of the break was assumed to be negligible. The blowdown flow comprised of initial inventory depletion followed by steady critical flow from the RPV. In computing the critical flow rate, flow loss factors between RPV and break location were ignored for conservatism. Tabulated values of mass and energy release rate for the postulated break is shown in Table 6.2-4b. The total blowdown duration of 41 seconds, as obvious from tabulated values, is based on assumption that the isolation valve starts closing at 11 seconds (1 second instrument response time and 10 seconds built in logic time delay) after the break and is fully closed in 30 seconds. Considering that the isolation valve is a gate valve, non-linear flow area changes with respect to time were used during the valve closure period.

Figure 6.2-37a shows the compartment nodalization scheme used for the pressurization analysis model for different break cases. Table 6.2-3 shows the free volume, initial environmental conditions and DBA characteristics for the compartments which were analyzed. Table 6.2-4 tabulates subcompartment vent path characteristics. The calculated peak pressure for the RCIC compartments are tabulated in Table 6.2-3. Graphs showing the compartment bounding pressure and temperature response as a function of time due to the postulated high energy line breaks are shown in Figures
6.2-37i and 6.2-37j, respectively. These results form basis for evaluating the effect of high energy line breaks on structures and safety related equipment.

6.2.3.3.1.3.2 CUW Compartment

For CUW a double-ended pipe break, as noted earlier, was postulated. The mass and energy blowdown release rate comprised of flow from both the RPV and BOP sides of the break location. The flow from the RPV side comprised of initial inventory depletion followed by steady critical flow. The flow from the BOP side is the depletion of inventory between the break location and the closest check valve. Flow loss factors due to pipe friction, and other mechanical devices such as valves, elbows, tees, etc. were accounted for only in determining steady critical flow rate, and not in determining the initial inventory depletion flow rate. Table 6.2-4a tabulates the flow loss factor considered for different postulated pipe break locations.

After the initial inventory depletion period, the steady RPV blowdown is choked at the venturi FE-001 (Figure 5.4-12, sheet 1 of 4) located upstream of the isolation valve, since the venturi flow area is smaller than the isolation valve flow area. After the isolation valve start closing, as soon as valve flow area becomes equal to the venturi flow area, flow will be choked at the isolation valve. The break flow stops when the isolation valve is fully closed.

Compartment pressurization analyses were done for postulated pipe breaks in different compartments. Tabulated mass and energy release rate for the postulated break cases are shown in Table 6.2-4b. The total blowdown duration of 76 seconds, as obvious from the tabulated values, is based on the assumption that the isolation valve starts to close at 46 seconds (1 second instrument response time plus 45 seconds built in time delay in blowdown differential flow detection logic) after the break and the isolation valve is fully closed in 30 seconds. Considering that the isolation valve is a gate valve, non-linear flow area changes with respect to time were used during the valve closure period.

Figure 6.2-37c shows compartment nodalization scheme for the pressurization analyses for different break cases. Table 6.2-3 shows the free volume, initial environmental conditions and DBA characteristics for the compartments which were analyzed. Table 6.2-4 tabulates subcompartment vent path characteristics. The calculated peak pressures for the CUW compartments are tabulated in Table 6.2-3. Graphs showing the compartment bounding pressure and temperature response as a function of time due to the postulated high energy line breaks are shown in Figures 6.2-37k and 6.2-37l, respectively. These results form basis for evaluating the effect of high energy line breaks on structures and safety related equipment.

6.2.3.3.1.3.3 Main Steam Tunnel

Double ended pipe breaks in main steamline (MSL) and feedwater line (FWL) were postulated. The mass and energy release rate comprised of flow from both the RPV and BOP sides. The blowdown flow comprised of initial inventory depletion followed by steady critical flow from the RPV and BOP sides. In calculating the critical flow rate flow loss factors were ignored for conservatism.

Tabulated values of mass and energy release rate for the postulated MSL and FWL breaks are shown in Table 6.2-4b. The total blowdown duration of 5.5 seconds for the MSL break, as obvious from the tabulated values, is based on the assumption that the main steam isolation valve (MSIV) starts closing at 0.5 seconds after the break and is fully closed in 5 seconds. The duration of 5.5 seconds is the longest closing time for the MSIVs. For the FWL break, the total blowdown duration of 120 seconds is determined by the feedwater flow from the BOP side, see Figure 6.2-3.

Figure 6.2-37b shows compartment nodalization scheme for the pressurization analyses for different postulated break cases. Table 6.2-3 shows the free volume, initial environmental conditions and DBA characteristics for the compartment analyzed. Table 6.2-4 tabulates subcompartment vent path characteristics. The calculated peak pressures for the main steam

tunnel compartments were limited by the MSL break and they are tabulated in Table 6.2-3. In comparison, the calculated peak differential pressure for the FWL break was found to be 26.5 kPaG. Graphs showing the compartment bounding pressure and temperature response as a function of time due to the postulated high energy line breaks are shown in Figures 6.2-37m and 6.2-37n, respectively. These results form basis for evaluating the effect of high energy line breaks on structures and safety related equipment.

As seen from the pressure transient results in Figure 6.2-37m, the peak pressure condition is reached very early in the transient, well before isolation valve starts closing. The compartment pressure drops as flow approaches to steady condition via interconnecting compartments. This suggests that the compartment peak pressure will not be influenced by valve closure characteristic, including an unlikely event in which valve failed to close automatically upon receipt of an isolation signal.

6.2.3.3.1.4 Equipment Qualification Temperature Values

The minimum set of thermal environmental conditions for safety-related systems and equipment are presented in Appendix 3I. These conditions are conservative envelope of the values due to high energy line breaks, with no credit taken for heat transfer into the compartment structural heat sinks. Heat transfer into structural heat sinks would result in lower calculated temperature values in the compartments.

Simplified conservative compartment transient cooling analyses were performed to determine adequacy of the equipment qualification (EQ) temperature values given in Appendix 3I. Credit for heat transfer into the structural heat sinks was taken in these analyses. Transient temperature response results from these analyses were compared with the EQ temperature values to confirm the adequacy of these values. These analyses are described in the following subsections.

6.2.3.3.1.4.1 Compartment Transient Cooling Analyses

The transient cooling analyses evaluated a double-ended guillotine break in CUW rooms (at EL -8200), and considered and analyzed two separate cases.

Case 1: It is assumed that isolation valve successfully close automatically upon receipt of an isolation signal. Closure of isolation valve terminates further depletion of vessel inventory into the subcompartment and, consequently, terminating further heating of the compartment environment. This case represents the design basis condition, and it is termed as an “Isolated Case”.

Case 2: It is postulated that isolation valve failed to close automatically upon receipt of an isolation signal. Isolation valve is closed through operator actions, which then terminates further depletion of vessel inventory into the subcompartment. This case represents beyond the design basis condition, and it is termed as an “Unisolated Case”. For sensitivity study purposes, two blowdown conditions were postulated and evaluated: 1) Operator actions close valve in 1/2

hour after pipe break accident; and 2) Operator actions close valve in 1 hour after pipe break accident.

6.2.3.3.1.4.1.1 Isolated Case: Design Basis Accident Condition

In this analysis it is assumed that isolation valve close automatically upon receipt of isolation signal, and mass and energy blowdown into the subcompartment terminates in 76 seconds after pipe break accident. This blowdown duration is comprised of sensor response time (1 s), time delay (45 s), and valve closing time (30 s). This is consistent with that used in subcompartment pressurization analyses. Mass and energy blowdown was confined to EL -8200 compartments only, taking no credit for flow communications with the higher level floors. All boundary walls and internal walls/floors were modeled as structural heat sinks. Natural convection plus radiation heat transfer mechanism between compartment environment and the structural heat sinks was assumed, for conservatism.

The calculated compartment transient temperature response is presented and compared with the EQ temperature values in Figure 6.2-37o. These results confirm that the EQ temperature values conservatively envelope the calculated transient temperature conditions.

6.2.3.3.1.4.1.2 Unisolated Case: Beyond the Design Basis Accident Condition

In these analyses, it is assumed that isolation valve failed to close automatically upon receipt of an isolation signal, but closed through operator actions. Break flow is confined to the entire secondary containment volume. All boundary walls and internal walls/floors were modeled as structural heat sinks. Natural convection plus radiation heat transfer mechanism between the compartment environment and the structural heat sinks was assumed, for conservatism.

The calculated transient temperature response for 1/2 hour and 1 hour operator actions time are presented and compared with the EQ temperature values in Figure 6.2-37p. These results show that the EQ temperature values (representative of the design basis condition) envelopes the transient temperature conditions for both 1/2 hour and 1 hour operator actions time.

6.2.3.4 Tests and Inspections

Testing and inspection of the integrity of secondary containment will be made as part of the testing of the SGTS (Subsection 6.5.1).

Status lights and alarms for door opening of secondary containment will be tested periodically by their operation, with observation of lights and alarms. Leakage testing and inspection of all other architectural openings will be made as they are utilized periodically.

6.2.3.5 Instrumentation Requirements

By their nature, electrical penetrations of secondary containment do not have any instrumentation requirements. Piping and HVAC penetrations instrumentation requirements are discussed as part of each system's description in this SAR.

Certain doors are fitted with status indication lights.

6.2.4 Containment Isolation System

The primary objective of the Containment Isolation System (CIS) is to provide protection against releases of radioactive materials to the environment as a result of accidents occurring in the systems inside the containment. The objective is accomplished by isolation of lines or ducts that penetrate the containment vessel. Actuation of the CIS is automatically initiated at specific limits defined for reactor plant operation. After the isolation function is initiated, it goes through to completion.

6.2.4.1 Design Bases

6.2.4.1.1 Safety Design Bases

(1) Containment isolation valves provide the necessary isolation of the containment in the event of accidents or other conditions and prevent the unfiltered release of containment contents that cannot be permitted by 10CFR50 or 10CFR100 limits. Leaktightness of the valves shall be verified by Type C test.

(2) Capability for rapid closure or isolation of all pipes or ducts that penetrate the containment is provided by means that provide a containment barrier in such pipes or ducts sufficient to maintain leakage within permissible limits.

(3) The design of isolation valving for lines penetrating the containment follows the requirements of General Design Criteria 54 through 57 to the greatest extent practicable consistent with safety and reliability.

(4) Isolation valves for instrument lines that penetrate the drywell/containment conform to the requirements of Regulatory Guide 1.11.

(5) Isolation valves, actuators and controls are protected against loss of their safety function from missiles and postulated effects of high- and moderate-energy line ruptures.

(6) Design of the containment isolation valves and associated piping and penetrations meets the requirements for Seismic Category I components.

(7) Containment isolation valves and associated piping and penetration meet the requirements of the ASME Boiler and Pressure Vessel Code, Section III, Class 1, 2, or MC, in accordance with their quality group classification.

(8) The design of the Control Systems for automatic containment isolation valves ensures that resetting the isolation signal shall not result in the automatic reopening of containment isolation valves.

6.2.4.1.2 Design Requirements

The Containment Isolation System, in general, closes fluid penetrations that support systems not required for emergency operation. Fluid penetrations supporting ESF systems have remote manual isolation valves which can be closed from the control room, if required.

The isolation criteria for the determination of the quantity and respective locations of isolation valves for a particular system conform to General Design Criteria 54, 55, 56, 57, and Regulatory Guide 1.11. Redundancy and physical separation are required in the electrical and mechanical design to ensure that no single failure in the CIS prevents the system from performing its intended functions.

Protection of CIS components from missiles is considered in the design, as well as the integrity of the components to withstand seismic occurrences without loss of operability. For power-operated valves used in series, no single event can interrupt motive power to both closure devices. Air-operated containment isolation valves are designed to fail to the required position for containment isolation upon loss of the instrument air supply or electrical power.

The CIS is designed to Seismic Category I requirements. Classification of equipment and systems is found in Table 3.2-1. Figure 6.2-38 identifies the quality group classifications and containment isolation provisions.

The criteria for the design of the containment and reactor vessel isolation control system are listed in Subsection 7.1.2. The bases for assigning certain signals for containment isolation are listed and explained in Subsections 7.3.1 and 7.6.1.

On signals of high drywell pressure or low water level in the reactor vessel, all isolation valves that are part of systems not required for emergency shutdown of the plant are closed. The same signals initiate the operation of systems associated with the ECCS. The isolation valves that are part of the ECCS can be closed remote-manually from the control room or closed automatically, as appropriate.

6.2.4.2 System Design

The Containment Isolation System consists of the valves and controls required for the isolation of lines penetrating the containment. Figure 6.2-38 identifies the containment isolation provisions. Table 6.2-7 shows the pertinent data for the containment isolation valves. A detailed discussion of the controls associated with the CIS is included in Subsections 7.3.1.1.2 and 7.3.1.1.11.

Power-operated containment isolation valves have indicating switches in the control room to show whether the valve is open or closed. Loss of power to each motor-operated valve (MOV) is detected and annunciated. Air-operated containment isolation valves are designed to fail in a safe position upon loss of air or power to the solenoid pilot valve. Power for valves used in

series originates from physically independent sources without cross-ties to assure that no single event can interrupt motive power to both closure devices.

Two main steam isolation valves (MSIVs) in series are used on each of the four steamlines to assure containment isolation when needed. One valve is as close as possible to the inside of the drywell, and the other is just outside the containment. Each MSIV is spring loaded and operated by pneumatic pressure that opens and closes the valve. Operating gas is supplied to the valves from the plant nitrogen or instrument air system. A pneumatic accumulator provides backup operating gas. Spring force closes the valve if gas pressure is not available. A detailed description of valve design is contained in Subsection 5.4.5.

All motor-operated isolation valves remain in their last position upon failure of valve power. All air-operated valves (not applicable to air-testable check valves) close on loss of air.

The design of the isolation valve system includes consideration to the possible adverse effects of sudden isolation valve closure when the plant systems are functioning under normal operation.

General compliance or alternate approach assessment for Regulatory Guide 1.26 may be found in Subsection 3.2.2. General compliance or alternate approach assessment for Regulatory Guide 1.29 may be found in Subsection 3.2.1.

Containment isolation valves are either automatically actuated by the containment isolation signals or are remote-manually operated, as appropriate. Primary and secondary modes of operation are assigned to these actuations, respectively.

Isolation valve closure will be assured by using the latest state of the art technology in valve design. Valve actuators will be sized based on demonstrated valve design and established disk friction factors. Adequate thrust capability will be developed with sufficient margin in the actuator and the valve as appropriate to demonstrate acceptability of the valve design for its application.

6.2.4.2.1 Containment Isolation Valve Closure Times

Containment isolation valve closure times are established by determining the isolation requirements necessary to keep radiological effects from exceeding guidelines in 10CFR100. For system lines which can provide an open path from the containment to the environment, a discussion of valve closure time bases is provided in Chapter 15.

6.2.4.2.2 Instrument Lines Penetrating Containment

Sensing instrument lines penetrating the containment follow all the recommendations of Regulatory Guide 1.11. Each line has a 6.35 mm orifice inside the drywell, as close to the beginning of the instrument line as possible, and a manually-operated isolation valve just outside the containment.

6.2.4.2.3 Compliance with General Design Criteria and Regulatory Guides

In general, all requirements of General Design Criteria 54, 55, 56, and 57, and Regulatory Guide 1.11 are met in the design of the Containment Isolation System. A case-by-case analysis of all such penetrations is given in Subsection 6.2.4.3.2.

6.2.4.2.4 Operability Assurance, Codes and Standards, and Valve Qualification and Testing

Protection is provided for isolation valves, actuators and controls against damage from missiles. All potential sources of missiles are evaluated. Where possible hazards exist, protection is afforded by separation, missile shields or by location outside the containment. Tornado missile protection is afforded by the fact that all containment isolation valves are inside the missile-proof Reactor Building. Internally-generated missiles are discussed in Subsection 3.5.1, and the conclusion is reached that there are no potentially damaging missiles generated. Dynamic effects from pipe break (jet impingement and pipe whip) are discussed in Section 3.6. The arrangement of containment isolation valves inside and outside the containment affords sufficient physical separation such that a high-energy pipe break will not preclude containment isolation. The CIS piping and valves are designed in accordance with Seismic Category I requirements as defined in Section 3.7 using the techniques of Subsection 3.9.2.

Section 3.11 presents a discussion of the environmental conditions, both normal and accidental, for which the Containment Isolation System is designed. The section discusses the qualification tests required to assure the performance of the isolation valves under particular environmental conditions.

Containment isolation valves are designed in accordance with the requirements of ASME Code Section III. Where necessary, a dynamic system analysis which covers the impact effect of rapid valve closures under operating conditions is included in the design specifications of piping systems involving containment isolation valves. Valve operability assurance testing is discussed in Subsection 3.9.3.

6.2.4.2.5 Valve Operability and Leakage Control

Provisions for demonstrating the operability of isolation valves are discussed in Subsection 3.9.3. Subsection 6.2.6 describes leakage rate testing of containment isolation barriers. The power-operated and automatic isolation valves will be cycled during normal operation to assure their operability.

6.2.4.2.6 Redundancy and Modes of Valve Actuations

The main objective of the Containment Isolation System is to provide environmental protection by preventing releases of radioactive materials. This is accomplished by complete isolation of system lines penetrating the primary containment. Redundancy is provided in all design aspects to satisfy the requirement of GDC 54 that no active failure of a single valve or component prevents containment isolation.

Mechanical components are redundant, in that isolation valve arrangements provide backup in the event of accident conditions. Isolation valve arrangement satisfy all requirements specified in General Design Criteria 54, 55, 56 and 57, and Regulatory Guide 1.11.

Isolation valve arrangements with appropriate instrumentation are shown in the P&IDs. The isolation valves have redundancy in the mode of actuation, with the primary mode being automatic and the secondary mode being remote manual.

A program of testing (Subsection 6.2.4.4) is maintained to ensure valve operability and leaktightness. The design specifications require each isolation valve to be operable under the most severe operating conditions that it may experience. Each isolation valve is afforded protection by separation and/or adequate barriers from the consequences of potential missiles.

Electrical redundancy is provided in power operated isolation valve arrangements, eliminating dependency on one power source to attain isolation. Electrical cables for isolation valves in the same line are routed separately. Cables are selected and based on the specific environment to which they may be subjected (e.g., magnetic fields, high radiation, high temperature and high humidity).

Provisions for administrative controls and/or locks ensure that the position of all manual isolation valves is maintained and known. The position of all power-operated control valves is indicated in the control room. Discussion of instrumentation and controls for the isolation valves is included in Chapter 7.

6.2.4.3 Design Evaluation

6.2.4.3.1 Introduction

The main objective of the Containment Isolation System is to provide protection by preventing releases to the environment of radioactive materials. This is accomplished by complete isolation of system lines penetrating the primary containment. Redundancy is provided in all design aspects to satisfy the requirement that any active failure of a single valve or component does not prevent containment isolation.

Mechanical components are redundant, such as isolation valve arrangements to provide backup in the event of accident conditions. Isolation valve arrangements satisfy requirements specified in General Design Criteria 54, 55, 56, and 57, and Regulatory Guide 1.11, as shown on Figure 6.2-38.

The isolation valves have redundancy in the mode of actuation with the primary mode being automatic and the secondary mode being remote manual. A program of testing (Subsection 6.2.4.4) is maintained to ensure valve operability and leaktightness.

Each isolation valve is qualified operable under the most severe operating conditions that it might experience. Each isolation valve is afforded protection by separation and/or adequate barriers from the consequences of potential missiles.

Electrical redundancy is provided in isolation valve arrangements, which eliminates dependency on one power source to attain isolation. Electrical cables for isolation valves in the same line have been routed separately. Cables have been selected and based on the specific environment to which they may be subjected, such as magnetic fields, high radiation temperature, and high humidity.

Provisions for administrative control and/or locks ensure that the position of all nonpowered isolation valves is maintained and known. For all power-operated valves the position is indicated in the main control room. Discussion of instrumentation and controls for the isolation valves is included in Chapter 7.

6.2.4.3.2 Evaluation Against General Design Criteria

6.2.4.3.2.1 Evaluation Against Criterion 55

The reactor coolant pressure boundary (RCPB), as defined in 10CFR50, Section 50.2, consists of the reactor pressure vessel (RPV), pressure-retaining appurtenances attached to the vessel, valves and pipes which extend from the RPV up to and including the outermost isolation valve. The lines of the RCPB that penetrate the containment include provisions for isolation of the containment, thereby precluding any significant release of radioactivity. Similarly, for lines that do not penetrate the containment, but which from a portion of the RCPB, the design ensures that isolation of the RCPB can be achieved.

6.2.4.3.2.1.1 Influent Lines

Influent lines, which penetrate the containment directly to the RCPB, are equipped with at least two isolation valves, one inside the containment and the other as close to the external side of the containment as practical.

Table 6.2-5 lists the influent pipes that comprise the RCPB and penetrate the containment. The table summarizes the design of each line as it satisfies the requirements imposed by General Design Criterion 55.

6.2.4.3.2.1.1.1 Feedwater Line

The feedwater line is part of the RCPB as it penetrates the drywell to connect with the reactor pressure vessel. It has two automatically closing isolation valves. The isolation valve inside the containment is a check valve, located as close as practicable to the containment wall. Outside the containment is another check valve located as close as practicable to the containment wall. The check valve outside the containment is provided with a spring closing operator which, upon remote manual signal from the main control room, provides additional seating force on the valve disk to assist in long-term leakage protection. Should a break occur in the feedwater line,

the check valves prevent significant loss of reactor coolant inventory and offer immediate isolation. The use of check valves as feedwater isolation valve allows reactor makeup from the Feedwater System, the RCIC System, and the RHR System operating in the LPFL mode following a postulated LOCA inside the reactor containment. A motor-operated gate valve is provided upstream of the outboard check valve for long-term leakage control.

See Subsection 6.2.4.3.2.1.1.5 for isolation of CUW return line connecting the feedwater line outside containment.

6.2.4.3.2.1.1.2 RHR Injection Line

Satisfaction of isolation criteria for the RHR injection line is accomplished by use of a remote-manually operated gate valve and check valve (Table 6.2-5). Both types of valves are normally closed, with the gate valve receiving an automatic signal to open at the appropriate time to assure that fuel temperature design limits are not exceeded in the event of a LOCA. The normally closed check valve protects against containment overpressurization in the event of a break in the line between the check valve and containment wall by preventing high-energy reactor water from entering the primary containment.

6.2.4.3.2.1.1.3 HPCF Line

The HPCF line penetrates the drywell to inject directly into the reactor pressure vessel. Isolation is provided by an air testable check valve, located inside the containment with position indicated in the main control room, and remote-manually actuated gate valve located as close as practicable to the exterior wall of the containment. Long-term leakage control is maintained by this gate valve. If a LOCA occurs, this gate valve will receive an automatic signal to open.

6.2.4.3.2.1.1.4 Standby Liquid Control System Line

The Standby Liquid Control System (SLCS) line penetrates the containment and connects to the HPCF line inside the upper drywell to form a common line which discharges directly into the RPV. In addition to a simple check valve inside the containment, a check valve, together with a MOV, are located outside the drywell. Since the SLCS line is a normally closed, nonflowing line, rupture of this line is extremely improbable. However, should a break occur subsequent to the opening of the MOV, the check valves insure isolation.

6.2.4.3.2.1.1.5 Reactor Water Cleanup System Line (Reactor Vessel Head Spray)

The Reactor Water Cleanup (CUW) System returns water to the RPV through two paths. The normal path during plant operation returns water from the filter/demineralizers to the feedwater lines outside the containment. During the postulated LOCA, it is desirable to terminate any CUW leakage. Isolation of the return line is provided by the Feedwater System check valve and CUW check valve and motor-operated valve. The motor- operated valve provides long-term leakage control.

The CUW System return path during initial shutdown cooling operation is through the head spray nozzle on the top of the RPV. The CUW System head spray line enters the containment in the upper drywell and has a MOV outside and a check valve inside the containment. The motorized valve is normally closed during plant operation but is given a close signal by the Leak Detection System when a containment isolation signal is given.

6.2.4.3.2.1.1.6 Recirculation Pump Seal Purge Water Supply Line

The recirculation pump seal water line extends from the recirculation pump motor housing through the containment and connect to the CRD supply just outside containment (Figure 5.4-4). Since the seal purge water line forms a part of the RCPB, the consequences of its failure have been evaluated.

The evaluations for previous similar designs show that the consequences of breaking the line are less severe than those of failing an instrument line. The recirculation pump seal water line is 20A Quality Group B from the manual shutoff valve located close to the recirculation pump motor housing through the second check valve (located outside the containment). From the second check valve to the CRD connection, the line is Quality Group D. If the line is postulated to fail and either one of the check valves is assumed not to close (single active failure), the flow rate through the broken line is calculated to be substantially less than permitted for a broken instrument line. Therefore, the two check valves in series provide sufficient isolation capability for postulated failure of the line.

6.2.4.3.2.1.2 Effluent Lines

Effluent lines which form part of the RCPB and penetrate containment are equipped with at least two isolation valves; one inside the containment and one outside, located as close to the containment wall as practicable.

Table 6.2-3 contains those effluent lines that comprise the reactor coolant pressure boundary and which penetrate the containment.

6.2.4.3.2.1.2.1 Main Steam and Drain Lines and RCIC Steamline

The main steamlines which extend from the reactor pressure vessel to the main turbine and condenser system, penetrate the primary containment. The main steam drain lines connect the low points of the steamlines, penetrate the primary containment and are routed to the condenser hotwell. The RCIC turbine steamline connects to the main steamline in the upper drywell and penetrates the primary containment. For these lines, isolation is provided by automatically actuated block valves, one inside and one just outside the containment.

6.2.4.3.2.1.2.2 RHR Shutdown Cooling Line

Three RHR shutdown cooling lines connect to the reactor vessel and penetrate the primary containment. Isolation is provided by two automatically actuated block valves, one inside and the other outside the containment.

6.2.4.3.2.1.2.3 Reactor Water Cleanup System Suction Line

The CUW takes its suction from the bottom head of the RPV and from the RHR "B" shutdown cooling suction line. The CUW suction line is isolated by two automatic motor-operated gate valves on the inside and outside of the containment. Should a break occur in the CUW System, the check valves would prevent backflow from the RPV and the isolation valves would prevent forward flow from the RPV.

CUW pumps, heat exchangers and filter/demineralizers are located outside the drywell.

6.2.4.3.2.1.3 Conclusion on Criterion 55

In order to assure protection against the consequences of accidents involving the release of radioactive material, pipes which form the RCPB have been shown to provide adequate isolation capabilities on a case-by-case basis. In all cases, a minimum of two barriers were shown to protect against the release of radioactive materials.

In addition to meeting the isolation requirements stated in Criterion 55, the pressure-retaining components which comprise the RCPB are designed to meet other appropriate requirements which minimize the probability or consequences of an accidental pipe rupture. The quality requirements for these components ensure that they are designed, fabricated, and tested to the highest quality standards of all reactor plant components. The classification of components which comprise the RCPB are designed in accordance with ASME Boiler and Pressure Vessel Code Section III, Class 1.

It is therefore concluded that the design of piping system which comprises the reactor coolant pressure boundary and penetrates the containment satisfies Criterion 55.

6.2.4.3.2.2 Evaluation Against Criterion 56

Criterion 56 requires that lines which penetrate the containment and communicate with the containment interior must have two isolation valves, one inside the containment and one outside, unless it can be demonstrated that the containment isolation provisions for a specific class of lines are acceptable on some other basis.

Although a word-for-word comparison with Criterion 56 in some cases is not practical, it is possible to demonstrate adequate isolation provisions on some other defined basis.

6.2.4.3.2.2.1 Influent Lines to Suppression Pool

Figure 6.2-38 identifies the isolation provisions in the influent lines to the suppression pool.

6.2.4.3.2.2.1.1 HPCF and RHR Test and Pump Minimum Flow Bypass Lines

The HPCF and RHR test and pump minimum flow bypass lines have isolation capabilities commensurate with the importance to safety of isolating these lines. Each line has a motor-operated valve located outside the containment. Containment isolation requirements are met on

the basis that the lines are low-pressure lines constructed to the same quality standards commensurate with their importance to safety. Furthermore, the consequences of a break in these lines result in no significant safety consideration. All of the lines terminate below the minimum drawdown level in the suppression pool.

The test return lines are also used for suppression pool return flow during other modes of operation. In this manner, the number of penetrations is reduced, thus minimizing the potential pathways for radioactive material release. Typically, pump minimum flow bypass lines join the respective test return lines downstream of the test return isolation valve. The bypass lines are isolated by MOVs in series with a restricting orifice.

6.2.4.3.2.2.1.2 RCIC Turbine Exhaust and Pump Minimum Flow Bypass Lines

The RCIC turbine exhaust line, which penetrates the containment and discharges to the suppression pool, is equipped with a normally open, motor-operated, remote-manually actuated gate valve located as close to the containment as possible. In addition, there is a simple check valve upstream of the gate valve, which provides positive actuation for immediate isolation in the event of a break upstream of this valve. The gate valve in the RCIC turbine exhaust is designed to be locked open in the control room and is interlocked to preclude opening of the inlet steam valve to the turbine until the turbine exhaust valve is in its full-open position. The RCIC pump minimum flow bypass line is isolated by a normally closed, remote manually actuated valve outside containment.

6.2.4.3.2.2.1.3 SPCU Discharge Line

The Suppression Pool Cleanup (SPCU) System discharge line to the suppression pool (i.e., containment penetration, piping and isolation valves) is designed to Seismic Category I, ASME Section III, Class 2 requirements.

6.2.4.3.2.2.2 Effluent Lines from Suppression Pool

Figure 6.2-38 identifies the isolation provisions in the effluent lines from the suppression pool.

6.2.4.3.2.2.2.1 RHR, RCIC and HPCF Lines

The RHR, RCIC, and HPCF suction lines contain motor-operated, remote-manually actuated gate valves which provide assurance of isolating these lines in the event of a break. These valves also provide long-term leakage control. In addition, the suction piping from the suppression pool must be available for long-term usage following a design basis LOCA, and, as such, is designed to the quality standards commensurate with its importance to safety. The RHR discharge line fill system suction lines have manual valves for operational purposes. These systems are isolated from the containment by the respective RHR pump suction valves from the suppression pool.

6.2.4.3.2.2.2.2 SPCU Suction Line

The SPCU System suction line has two isolation valves. However, because the penetration is under water, both isolation valves are located outside the containment. The first valve is located as close as possible to the containment, and the second is located to provide adequate separation from the first.

6.2.4.3.2.2.2.3 ACS Lines to Containment

The Atmospheric Control System (ACS) has both influent and effluent 550A lines which penetrate the containment. Both isolation valves on these lines are outside of the containment vessel to provide accessibility to the valves. The valves are located as close as practical to the containment vessel. The piping from the containment to and including both valves is an extension of the primary containment boundary and is designed in accordance with the ASME Boiler and Pressure Vessel Code, Section III, Class 2 requirements. The arrangement of the isolation valves and connecting piping is such that a single active failure of an inboard valve, or a single active or passive failure in the connecting piping or an outboard valve, cannot prevent isolation of the ACS containment penetrations. The ACS containment isolation valve closure time is ≤ 20 seconds. These valves close on the following signals: high drywell pressure, RPV low water level 3, and high radioactivity in the purge and vent exhaust line. The SRP 6.2.4 states that the 5-second closure speed is necessary to assure that the purge and vent valves would have closed before the onset of fuel failures following a LOCA. The ACS purge and vent valves are normally closed during plant operation and are allowed to open only during the inerting (startup) and de-inerting (shutdown) process where the reactor is at greater than 15% power. The likelihood of LOCA during inerting/de-inerting is very low. If a LOCA does occur, these valves will have closed before the onset of fuel failure. Note that the onset of fuel failure is when the core is uncovered and that reactor water level 3 (when ACS valves isolate) is 3.8m above the core. In the event of a radioactivity leak during inerting/ de-inerting, the radiation detectors at the purge and vent exhaust line will detect the condition and isolate the ACS containment isolation valves. Note that the exhaust radiation detectors are very sensitive and are set at a lower setpoint compared to the ones inside containment to have an effective early detection. For the ACS, a more reliable isolation valve is necessary to ensure containment integrity. A fast closing valve is less reliable than valves with moderate speed. The difference between 5 and 20 seconds is considered to be insignificant. Thus, the risk is judged to be sufficiently small and that the 20-second closure time, is deemed sufficient and reliable.

The ACS also has two 50A makeup line isolation valves which are normally open during normal reactor operation to provide nitrogen makeup into the containment. If these isolation valves are placed in the normally closed position, nitrogen makeup will not be possible without opening. In either position, these valves need to open to provide nitrogen makeup. The normally open position provides automatic nitrogen makeup without frequent cycling that could cause damage to valves. In the event of a LOCA or an event requiring primary containment isolation, these valves automatically close upon receipt of the following signals: high drywell pressure, low water level, high radioactivity in the purge and vent exhaust line. These valves are

redundant and meet ESF requirements as described above for the 550A influent and effluent lines.

6.2.4.3.2.2.2.4 Conclusion on Criterion 56

In order to assure protection against the consequences of accidents involving release of significant amounts of radioactive materials, pipes that penetrate the containment have been demonstrated to provide isolation capabilities on a case-by-case basis in accordance with Criterion 56.

In addition to meeting isolation requirements, the pressure-retaining components of these systems are designed to the quality standards commensurate with their importance to safety.

6.2.4.3.2.3 Evaluation Against Criterion 57

Lines penetrating the primary containment, which are governed by neither Criterion 55 nor Criterion 56, comprise the closed system isolation valve group.

Influent and effluent lines of this group are isolated by automatic or remote-manual isolation valves located as close as possible to the containment boundary.

6.2.4.3.2.4 Evaluation Against Regulatory Guide 1.11

Instrument lines that connect to the RCPB and penetrate the containment have 6.35 mm orifices and manual isolation valves, in compliance with Regulatory Guide 1.11 requirements.

6.2.4.3.3 Evaluation of Single Failure

A single failure can be defined as a failure of a component (e.g., a pump, valve, or a utility such as offsite power) to perform its intended safety functions as a part of a safety system. The purpose of the evaluation is to demonstrate that the safety function of the system will be completed even with that single failure. Appendix A to 10CFR50 requires that electrical systems be designed specifically against a single passive or active failure. Section 3.1 describes the implementation of these standards, as well as General Design Criteria 17, 21, 35, 38, 41, 44, 54, 55 and 56.

Electrical as well as mechanical systems are designed to meet the single-failure criterion, regardless of whether the component is required to perform a safety action. Even though a component, such as an electrically-operated valve, is not designed to receive a signal to change state (open or closed) in a safety scheme, it is assumed as a single failure if the system component changes state or fails. Electrically-operated valves include valves that are electrically piloted but air operated, as well as valves that are directly operated by an electrical device. In addition, all electrically-operated valves that are automatically actuated can also be manually actuated from the main control room. Therefore, a single failure in any electrical system is analyzed, regardless of whether the loss of a safety function is caused by a component

failing to perform a requisite mechanical motion or a component performing an unnecessary mechanical motion.

6.2.4.3.4 Evaluation of Containment Purge and Vent Valves Isolation Barrier Design

Protection of the containment purge system CIVs from the effects of flood and dynamic effects of pipe breaks will be provided in accordance with Sections 3.4 and 3.6. The CIVs are air-operated with pilot DC solenoid valve. The power to the DC solenoid valve is supplied from the DC distribution system to the demultiplexer from the valve. Both the supply and return lines for the DC are fused at the multiplexer so that faults are isolated and do not propagate back up into the portions of the DC system common with other systems. This is also discussed in the Fire Hazard Analysis in Section 9A.5.

6.2.4.3.5 Evaluation of Simultaneous Venting of Drywell and Wetwell

The large (550A) purge and vent lines for the ACS, shown in Figure 6.2-39 are not used for purge or venting during normal reactor operation. The isolation valves in these lines are normally closed, they fail in the closed position, they receive an automatic closure signal in the event of a LOCA and they are not needed for pressure control of the containment during normal operation. Administrative controls are used to prevent opening of these valves except at the beginning and end of an operating cycle.

Pressure control of the containment during operation is maintained by a single, small (50A) nitrogen supply line, and a single, small (50A) vent line. The supply line is divided and provides makeup nitrogen to both drywell and wetwell. The small vent line is attached to the 550A drywell purge exhaust line and bypasses the closed 550A valve (F004). There is no equivalent vent line from the wetwell. Therefore, the drywell and wetwell are not vented simultaneously during operation and the system has only one supply and one exhaust line as required by BTP CSB 6-4.

6.2.4.3.6 Evaluation of Containment Purge System Against Criterion 54

The containment purge system has redundant CIVs each powered from independent electrical division. The CIVs are arranged such that any single failure will not compromise the integrity of the containment. These valves are designed to fail in closed position upon loss of air or loss of electric power to the pilot solenoid valve. With the exception of the makeup valves (50A), all containment purge system CIVs are in closed position during normal reactor operation. The purge and vent valves are open only during the inerting and de-inerting modes. All containment purge system CIVs automatically close upon receipt of containment isolation signal. Also, these valves are outside containment and accessible should manual actuation be required. Since this arrangement has adequate redundancy, and independence and is not unduly vulnerable to common mode failures, it is not necessary to have redundant and independent CIVs as would be required by Criterion 54.

6.2.4.4 Test and Inspections

The Containment Isolation System is scheduled to undergo periodic testing during reactor operation. The functional capabilities of power-operated isolation valves are tested remote-manually from the control room. By observing position indicators and changes in the affected system operation, the closing ability of a particular isolation valve is demonstrated.

Air-testable check valves are provided on influent emergency core cooling lines of the HPCF and RHR Systems whose operability is relied upon to perform a safety function.

A discussion of testing and inspection of isolation valves is provided in Subsection 6.2.1.6. Instruments are periodically tested and inspected. Test and/or calibration points are supplied with each instrument. Leakage integrity tests shall be performed on the containment isolation valves with resilient material seals at least once every three months.

6.2.5 Combustible Gas Control in Containment

The Atmospheric Control System (ACS) is provided to establish and maintain an inert atmosphere within the primary containment during all plant operating modes except during shutdown for refueling or equipment maintenance and during limited periods of time to permit access for inspection at low reactor power. The Flammability Control System (FCS) is provided to control the potential buildup of hydrogen and oxygen from design basis metal water reaction and radiolysis of water. The objective of these systems is to preclude combustion of hydrogen causing damage to essential equipment and structures. The COL applicant is required to provide a comparison of costs and benefits for any optional alternate system of hydrogen control.

6.2.5.1 Design Bases

Since there is no design requirement for the ACS or FCS in the absence of a LOCA and since there is no design basis accident in the ABWR that results in core uncovery or fuel failures, the following requirements mechanistically assume that a LOCA producing the design basis quantities of hydrogen and oxygen has occurred. Following are criteria that serve as the bases for design:

(1) The hydrogen generation from metal-water reaction is defined in Regulatory Guide 1.7.

(2) The hydrogen and oxygen generation from radiolysis is defined in Regulatory Guide 1.7.

(3) The ACS establishes an inert atmosphere throughout the primary containment following an outage or other occasions when the containment has been purged with air to an oxygen concentration greater than 3.5%.

(4) The ACS maintains the primary containment oxygen concentration below the maximum permissible limit per Regulatory Guide 1.7 during normal, abnormal, and accident conditions in order to assure an inert atmosphere.

(5) The ACS also maintains a slightly positive inert gas pressure in the primary containment during normal, abnormal and accident conditions to prevent air (oxygen) leakage into the inerted volumes from the secondary containment, and provides non-safety-related monitoring of the oxygen concentration in the primary containment to assure a breathable mixture for safe personnel access. Essential safety-related monitoring is provided by the Containment Atmospheric Monitoring System (CAMS), as described in
Chapter 7.

(6) The drywell and the suppression chamber will be mixed uniformly after the design basis LOCA due to natural convection and molecular diffusion. Mixing will be further promoted by operation of the containment sprays.

(7) The FCS is capable of controlling combustible gas concentrations in the containment atmosphere for the design bases LOCA without relying on purging and without releasing radioactive material to the environment.

(8) The ACS and FCS together are designed to maintain an inert primary containment after the design-bases LOCA, assuming a single-active failure. The backup purge function need not meet this criterion.

(9) Components of the ACS inside the Reactor Building are protected from postulated missiles and pipe whip, as required to assure proper action.

(10) The ACS has the capability to withstand the dynamic effects associated with a safe shutdown earthquake without loss of isolation function.

(11) The system is designed so that all components exposed to the primary containment atmosphere (i.e., inboard isolation valves) are capable of withstanding the temperature, humidity, pressure, and radiation transients resulting from a LOCA.

(12) The ACS is non-safety class except as necessary to assure primary containment integrity (penetrations, isolation valves). The ACS and FCS are designed and built to the requirements specified in Section 3.2.

(13) The ACS includes a liquid nitrogen storage tank, vaporizer and heater along with the valves and piping carrying nitrogen to the containment, valves and piping from the containment to the SGTS and HVAC exhaust line, dedicated containment overpressure relief line with attached valves and rupture disk, non-safety oxygen

monitoring, and all related instruments and controls. The ACS does not include any structures or housing supporting the aforementioned equipment or any ducting in the primary containment. Figure 6.2-39 shows the system P&ID.

The nitrogen supplied from the ACS shall be oil-free with a moisture content of less than 2.5 ppm. Filters are provided to remove particulates larger than 5 micrometers.

(14) The system is designed to facilitate periodic inspections and tests. The ACS can be inspected or tested during normal plant conditions.

(15) The primary containment purge system will aid in the long-term post-accident cleanup operation. The primary containment atmosphere will be purged through the SGTS to the outside environment. Nitrogen makeup will be available during the purging operation.

(16) The ACS is also designed to release containment pressure before uncontrolled containment failure could occur.

6.2.5.2 System Design

6.2.5.2.1 General

The FCS and ACS are systems designed to control the environment within the primary containment. The FCS provides control over hydrogen and oxygen generated following a LOCA. In an inerted containment, mixing of any hydrogen generated is not required. Any oxygen evolution from radiolysis is very slow such that natural convection and molecular diffusion is sufficient to provide mixing. Spray operation will provide further assurance that the drywell or wetwell is uniformly mixed. The FCS consists of the following features:

(1) The FCS has two recombiners installed in the secondary containment. The recombiners process the combustible gases drawn from the primary containment drywell.

(2) The FCS is activated when a LOCA occurs. The oxygen and hydrogen remaining in the recombiners after having been processed are transmitted to the suppression pool.

The ACS provides and maintains an inert atmosphere in the primary containment during plant operation. The system is not designed as a continuous containment purging system. The ACS exhaust line isolation valves are closed when an inert condition in the primary containment has been established. The nitrogen supply makeup lines, compensating for leakage, provide a makeup flow of nitrogen to the containment. If a LOCA signal is received, the ACS valves close. Nitrogen purge from the containment occurs during shutdown for personnel access. Purging is accomplished with the containment inlet and exhaust isolation valves opened to the selected exhaust path and the nitrogen supply valves closed. Nitrogen is replaced by air in the

containment (see Item (3) Shutdown-Deinerting below this subsection). The system has the following features:

(1) Atmospheric mixing is achieved by natural processes. Mixing will be enhanced by operation of the containment sprays, which are used to control pressure in the primary containment.

(2) The ACS primary containment nitrogen makeup maintains an oxygen-deficient atmosphere (≤3.5% by volume) in the primary containment during normal operation.

(3) The redundant oxygen analyzer system (CAMS) measures oxygen in the drywell and suppression chamber. Oxygen concentrations are displayed in the main control room. Description of safety-related display instrumentation for containment monitoring is provided in Chapter 7. Electrical requirements for equipment associated with the combustible gas control system are in accordance with the appropriate IEEE standards as referenced in Chapter 7.

In addition, the ACS provides overpressure protection to relieve containment pressure, as required, through a pathway from the wetwell airspace to the stack. The pathway is isolated during normal operation by a rupture disk.

The following modes of ACS operation are provided:

(1) **Startup**—Inerting: Liquid nitrogen is vaporized with steam or electric heaters to a temperature greater than -7°C and is injected into the wetwell and the drywell. The nitrogen will be mixed with the primary containment atmosphere by the drywell coolers in the drywell and, if necessary, by the sprays in the wetwell.

(2) **Normal**—Maintenance of Inert Condition: A nitrogen makeup system automatically supplies nitrogen to the wetwell and upper drywell to maintain a slightly positive pressure in the drywell and wetwell to preclude air leakage from the secondary to the primary containment. An increase in containment pressure is controlled by venting through the drywell bleed line.

(3) **Shutdown**—Deinerting: Air is provided to the drywell and wetwell by the Reactor Building HVAC purge supply fan. Exhaust is through the drywell and wetwell exhaust lines to the plant vent, through the HVAC or SGTS, as required. During shutdown, purge air provides containment access ventilation.

(4) Overpressure Protection: If the wetwell pressure increases to about 617.8 kPaG(Subsection 19E.2.8.1), the rupture disk will open. The overall containment pressure decreases as venting continues. Closing the two 250A air-operated butterfly valves re-establishes containment isolation as required.

(5) ACS, except COPS, primary containment isolation valves, if open, (they are normally closed) are automatically closed if the drywell high pressure, or reactor low water level 3 setpoint is reached or if high radiation is detected in the exhaust flow. (See Table 5.2-6)

The following interfaces with other systems are provided:

(1) Residual Heat Removal System (RHR): The RHR System provides post-accident suppression pool cooling, as necessary, following heat dumps to the pool, including the exothermic heat of reaction released by the design basis metal-water reaction. This heat of reaction is very small and has no real effect on pool temperature or RHR heat exchanger sizing. The wetwell spray portion of the RHR may be activated during a LOCA help mixing by reducing pocketing. Wetwell spray would also serve to accelerate deaeration of the suppression pool water, though the impact of the dissolved oxygen on wetwell airspace oxygen concentration is very small. The RHR System also provides cooling water to the exhaust flow from the FCS.

(2) Drywell Cooling System: Provides circulation to all portions of the upper and lower drywell, the drywell head area, and the vessel support skirt area to accomplish the mixing necessary for completion of either the inerting or deinerting process and provides representative oxygen samples to the CAMS oxygen sensors. Should the arrangement of the RPV insulation leave a significant gap between itself and the RPV, forced circulation will be provided to that area. Portions of the drywell will be inerted to sufficiently below 3.5% such that the bulk average oxygen concentration does not exceed 3.5% oxygen

(3) HVAC System: (1) supplies the drywell and wetwell exhaust flow during inerting, deinerting, and shutdown venting (2) accommodates drywell bleedoff flows during startup, (3) provides sufficient air flow to limit the concentration of any nitrogen leaking from the primary containment into the secondary containment, and (4) supplies air for purging the primary containment during deinerting and shutdown venting. Nitrogen leaking from the primary containment is insignificant and does not impact HVAC design.

The two outdoor air intakes of the Control Room habitability HVAC System are located far apart to protect personnel in the control room in the event of a nitrogen pipe or storage tank rupture. Similarly, intakes for all HVAC systems are located to minimize the introduction of nitrogen from such ruptures into occupied areas of the plant.

(4) High Pressure Nitrogen Gas Supply System: Serves all pneumatically-operated components in the primary containment because the containment is inerted. The pneumatic devices in the primary containment or those which could leak into the primary containment are supplied with nitrogen for the purpose of preventing oxygen

addition to the inerted volumes. The High Pressure Nitrogen Gas Supply System is supplied from the ACS nitrogen storage tank and a bank of nitrogen storage cylinders.

(5) Standby Gas Treatment System: Processes any drywell bleedoff, inerting, and deinerting exhaust flows, as required by offsite release constraints.

(6) Containment Atmospheric Monitoring System: Monitors oxygen levels in the wetwell and drywell during accident conditions to confirm the primary containment oxygen level is kept within limits.

Radiation monitoring in the plant vent, part of Process Radiation Monitoring, detects high radiation during deinerting.

There are no potential sources of oxygen in the containment other than that resulting from radiolysis of the reactor coolant. Consideration of potential sources of leakage of oxygen into the containment included not only normal plant conditions but also postulated LOCA conditions. Potential sources of leakage are instrument air systems, service air lines, and inflatable door seals. Nitrogen is substituted for service and instrument air whenever leakage into the inerted containment could be postulated.

6.2.5.2.2 Inerting Equipment

The inerting subsystem is capable of reducing the wetwell and drywell oxygen concentrations from atmospheric conditions to less than 3.5% in less than four hours. The inerting vaporizers are sized to provide at least 2.5 times the containment (wetwell and drywell) free volume of nitrogen within the allotted four hours. The specified oxygen limit of 3.5% by volume must be adjusted for initial containment conditions, instrumentation errors, operator and equipment response time, and equipment performance to ensure that the actual oxygen concentration does not exceed 3.5% by volume during normal operation. The actual oxygen concentration shall not exceed 5% by volume during an accident when the hydrogen concentration is greater than 4%. The inert containment can be deinerted to allow safe personnel access without breathing apparatus in less than four hours.

Each penetration and pipe carrying nitrogen is sloped as necessary to prevent condensation collection and line blockage and shall be protected against entry of debris.

All pipe volumes where liquid or very cold nitrogen could be trapped between closed valves have relief valves. All relief valves exhaust outside the Reactor Building. Means are provided to spray nitrogen to the nitrogen storage tank vapor space (to decrease tank pressure) and the liquid volume (to increase tank pressure). Tank level and pressure indication are provided at the tank. Means for startup full-scale testing of the inerting and makeup portions of the system without nitrogen injection to the containment are provided. During startup, the test discharges shall be temporarily piped away from the control panel and storage and vaporization equipment to avoid excessive noise from the open discharge. Strainers are provided in the liquid portion

of the makeup and inerting lines. Means are provided to feed the makeup circuit from either the liquid or vapor portion of the nitrogen storage. Pressure is automatically maintained in the nitrogen storage tank during nitrogen discharge by a circuit with another ambient heat exchanger fed by a pressure control valve. The inerting and makeup portions of the system do not rely on pumps to perform their function. Means are provided to manually vent the tank vapor space to control pressure. Means are provided to drain the storage tank. The vessel bottom is sloped or dished to facilitate this draining.

Pressure relief for the nitrogen storage tank is provided at 10% above the upper limit of the normal range of operating pressures. Rupture disks, set 20% above the upper limit but not higher than the design pressure of the vessel, are provided. Redundant pressure relief valves are provided so that protection is immediately available should a disk rupture and then be isolated. Penetrations through the nitrogen storage tank insulation are minimized to reduce heat gain. The length of piping through the insulation is maximized to the extent practicable to reduce heat gain.

During plant startup, drywell and wetwell atmospheric oxygen concentration will be less than 3.5% by volume within 24 hours after thermal power has reached to 15% of plant rating. Prior to plant shutdown, twenty-four hours of operation above 3.5% oxygen at greater than 15% of plant rating is allowed. All piping outside the outboard primary containment isolation valves carrying nitrogen are protected from overpressurization by relief valves ducted to the outdoor atmosphere.

6.2.5.2.3 Nitrogen Makeup

(1) The nitrogen makeup equipment is sized to maintain a positive pressure in the drywell and wetwell during the maximum drywell cooldown rate not caused by spray actuation.

(2) Automatic addition of nitrogen is physically limited to less than the maximum drywell bleed capacity.

6.2.5.2.4 Drywell Bleed

Primary containment bleed capability is provided in accordance with Regulatory Guide 1.7 and as an aid in cleanup following an accident. During normal plant operation, the bleed line also functions, in conjunction with the nitrogen purge line, to maintain primary containment pressure at about 5.2 kPaG and oxygen concentration below 3.5% by volume. This is accomplished by makeup of the required quantity of nitrogen into the primary containment through the makeup line or relieving pressure through the bleed line. The drywell bleed line is manually operable from the control room. Flow through the bleed line will be directed through either the SGTS or the secondary containment HVAC (SCHVAC), and be monitored by the SGTS and SCHVAC flow and radiation instrumentation. All ACS primary containment isolation valves are automatically closed when high radiation is detected in the exhaust flow (Table 5.2-6).

The drywell bleed line is located above an elevation which would be covered by post-LOCA flooding for unloading the fuel.

6.2.5.2.5 Pressure Control

(1) In general, during startup, normal, and abnormal operation, the wetwell and drywell pressure is maintained greater than 0 kPaG to prevent leakage of air (oxygen) into the primary containment from secondary containment but less than the nominal 13.7 kPaG scram setpoint. Sufficient margin is provided such that normal containment temperature and pressure fluctuations do not cause either of the two limits to be reached considering variations in initial containment conditions, instrumentation errors, operator and equipment response time, and equipment performance.

(2) Nitrogen makeup automatically maintains a 5.2 kPaG positive pressure to avoid leakage of air from the secondary into the primary containment.

(3) The drywell bleed sizing is capable of maintaining the primary containment pressure less than 8.6 kPaG during the maximum containment atmospheric heating which could occur during plant startup.

6.2.5.2.6 Overpressure Protection

6.2.5.2.6.1 General

(1) The system is designed to passively relieve the wetwell vapor space pressure at 617.8 kPaG (Subsection 19E.2.8.1). The system valves are capable of being closed from the main control room using AC power and pneumatic air.

(2) The vent system is sized so that residual core thermal power in the form of steam can be passed through the relief piping to the stack.

(3) The initial driving force for pressure relief is assumed to be the expected pressure setpoint of the rupture disk.

(4) The rupture disk is designed to prevent flow in the containment overpressure relief piping until a specified rupture pressure is reached. It is constructed of stainless steel or a material of similar corrosion resistance.

(5) A number of rupture disks are procured at the same time and made from the same sheet to provide uniformity of relief pressure.

(6) The rupture disk is part of the primary containment boundary and is able to withstand the containment design pressure (309.9 kPa) with no leakage to the environment. It is also capable of withstanding full vacuum in the wetwell vapor space without leakage. The disk ruptures at 617.8 kPa due to overpressurization during a severe accident as required to assure containment structural integrity. As potential backup

to a leaking, fractured or improperly sealed rupture disk, the two valves upstream of the disk can be closed. These valves are safety-related and are subjected to all testing required for normal isolation valves. The solenoids in these valves are DC powered. These valves are capable of closing against pressures up to 617.8 kPaG.

(7) The piping material is carbon steel. The design pressure is 1030 kPaG, and the design temperature is 171°C.

6.2.5.2.6.2 Containment Overpressure Protection System

ABWR has a very low core damage frequency. Furthermore, in the unlikely event of an accident resulting in core damage, the fission products are typically trapped in the containment and there is no release to the environment. Nonetheless, in order to mitigate the consequences of a severe accident which results in the release of fission products and to limit the effects of uncertainties in severe accident phenomena, ABWR is equipped with a containment overpressure protection system (COPS). This system is intended to provide protection against the rare sequences in which structural integrity of the containment is challenged by overpressurization. It has been determined that these rare sequences comprise a small percentage of the hypothesized severe accident sequences.

The COPS is part of the atmospheric control system and consists of two 200 mm diameter overpressure relief rupture disks mounted in series on a 250 A line which connects the wetwell airspace to the stack. The second rupture disk, located at the inlet to the plant stack, has a very low set point, less than 0.03 MPaD. The setpoint of the inner rupture disk, located near the containment boundary, will be selected such that the COPS opens when the wetwell pressure is 0.72 MPaA. The COPS provides a fission product release point at a time prior to containment structural failure. Thus, the containment structure will not fail. By engineering the release point in the wetwell airspace, the escaping fission products are forced through the suppression pool. In a core damage event initiated by a transient in which the vessel does not fail, fission products are directed to the suppression pool via the SRVs, scrubbing any potential release. In a severe accident with core damage and vessel failure or in a LOCA which leads to core damage, the fission products will be directed from the vessel and drywell through the drywell connecting vents and into the suppression pool again ensuring any release is scrubbed. Eventually, if containment pressure cannot be controlled, the rupture disk opens. Any fission product release to the environment is greatly reduced by the scrubbing provided by the suppression pool.

In the absence of the COPS, unmitigated overpressurization of the containment will result in failure of the drywell head for most severe accident scenarios (some high-pressure core melt sequences result in fission product leakage through the moveable penetrations in the drywell rather than drywell head failure). To compare the consequences of severe accidents resulting in fission product releases via drywell head failure to those with releases through the COPS, MAAP was used to simulate a series of severe accident sequences for both release mechanisms. These severe accident sequences are described in Section 19E.2.2. Failure pressure of the drywell head was assumed to be equal to its median failure pressure 1.025 MPa. The results of these runs show releases of volatile fission products, after 72 hours, for the COPS cases to be

several orders of magnitude less than for the corresponding drywell head failure cases. The CsI release fractions are compared in Table 19E.2-25. Most accident sequences show this large difference in releases between drywell head failures and COPS cases.

6.2.5.2.6.3 Pressure Setpoint Determination

Several factors were considered in determining the optimum pressure setpoint for the rupture disk. The results of the previous analysis show that it is desirable to avoid drywell head failure. This can be assured by providing a rupture disk pressure setpoint below the pressure that would begin to challenge the structural integrity of the containment. However, as the pressure setpoint is reduced, the time to containment failure and fission product release is also reduced. Thus, the setpoint of the rupture disk must optimize these competing factors: minimizing the probability of drywell head failure while maximizing time before fission product release to the environment.

The service level C capability of the containment serves as one indication of a lower bound for the structural integrity of the containment. As shown in Appendix 19F, the service level C for the ABWR is 0.77 MPaA, limited by the drywell head. Thus, it is desirable to set the rupture disk setpoint below this value.

The distribution of drywell head failure pressure and the distribution of rupture disk burst pressure were also considered in determining the burst pressure. As stated in Attachment 19FA, the drywell head failure pressure is assumed to have a lognormal distribution with a median failure pressure equal to its ultimate strength of 1.025 MPa. The variability of rupture disk opening pressures is best modeled with a normal or Gaussian distribution. Typical high quality rupture disk exhibits a tolerance of ±5% of the mean opening pressure. Tests have shown that this ±5% tolerance spans ±2 to ±2.5 standard deviations of the rupture disk population. This analysis of the containment overpressure protection system conservatively assumes that only ±2 standard deviations are included within the ±5% tolerance. Because the setpoint of the other rupture disk is very low, the variability of the pressure is neglected in comparison to the variability of the inner high pressure disk.

A critical parameter in determining the risk of drywell head failure before rupture disk opening is the pressure difference between the drywell and wetwell. Late in an accident the drywell is at higher pressure than the wetwell. For a given rupture disk setpoint, the probability of drywell head failure increases as the pressure difference increases. The maximum drywell to wetwell pressure difference is 0.1 MPa. This pressure difference occurs for cases in which firewater spray was activated after vessel failure but terminated before containment failure. Cases without firewater spray have pressure differences of no more than 0.05 MPa.

A COPS system setpoint of 0.72 MPaA at 93°C was chosen. The residual risk of drywell head failure may be calculated by combining the two distributions with an offset corresponding to the pressure difference between the wetwell and the drywell. A 0.72 MPaA setpoint results in a small probability of drywell head failure prior to rupture disk opening for a 0.1 MPa drywell

to wetwell pressure difference. For a drywell to wetwell pressure difference of 0.05 MPa, the drywell head failure probability prior to rupture disk opening is smaller. This is judged to be an acceptable level of risk.

6.2.5.2.6.4 Variability in Rupture Disk Setpoint

Nickel was chosen as the material for the rupture disk for evaluation purposes due to its relative insensitivity to changes in temperature. At temperatures above room temperature the opening pressure of a typical nickel rupture disk will decrease by about 2% for a 56°C increase in temperature. Thus, in order to estimate the uncertainty due to variations in the temperature of the ABWR rupture disk, a sensitivity study was performed in which the pressure setpoint of the rupture disk was varied.

The nominal pressure setpoint of the rupture disk is 0.72 MPaA at 93°C. Two cases were examined using MAAP ABWR in this sensitivity study. For both cases the LCLP-PF-R sequence was used as the base case. First, the rupture disk pressure setpoint was reduced to 0.708 MPaA which corresponds to a rupture disk temperature of 149°C; and second, the pressure setpoint was increased to 0.735 MPaA which corresponds to a temperature of 38°C. This temperature range, from 38°C to 149°C, bounds all anticipated rupture disk temperatures.

The elapsed time to rupture disk opening was within 0.8 hours of the base case value of 20.2 hours for both cases tested. Higher rupture disk temperatures (i.e., lower pressure setpoints) reduce the time to rupture disk opening and lower rupture disk temperatures (i.e., higher pressure setpoints) increase the time to rupture disk opening. There were no significant changes in fission product release. For both cases the CsI release fraction at 72 hours remained less than 1E-7.

Another parameter affected by the variation in the rupture disk temperature is the probability of drywell head failure prior to rupture disk opening in a severe accident. Using the rupture disk and drywell head failure distributions, it was determined that the probability of drywell head failure prior to rupture disk opening increased slightly for the case with rupture disk temperature of 38°C. With a rupture disk temperature of 149°C, the probability decreased slightly. The rupture disk temperature variation has a similar effect on the severe accident sequences in which the firewater spray system is activated. The probability of drywell head failure prior to rupture disk opening increases slightly for the case with rupture disk temperature of 38°C and decreases slightly for the case with rupture disk temperature of 149°C.

The results of this sensitivity study show that variations in rupture disk temperature, which cause small variations in rupture disk opening pressure, have a minor effect on the performance of the ABWR containment overpressure protection system.

6.2.5.2.6.5 Sizing of Rupture Disk

The size of the rupture disk has also been optimized. If the rupture disk is too small, it could be incapable of venting enough steam to prevent further containment pressurization. On the other

hand, if the rupture disk is too large, level swell in the suppression pool could introduce water into the COPS piping. If this were to occur, the piping could be damaged or there could be carryover of waterborne fission products from the containment.

A 200A rupture disk was selected. This is sufficient to allow 35 kg/s of steam flow at the opening pressure of 0.72 MPaA and corresponds to an energy flow of about 2.4% rated power. The minimum acceptable flow rate is 28 kg/s of steam flow at the same pressure. For virtually all severe accident sequences, the rupture disk would not be called upon until about 20 hours after scram. The decay heat level at this time is less than 0.5%. Thus, there is ample margin in the sizing of the rupture disk for severe accidents.

An additional accident was considered in the selection of the rupture disk size. In the event of an ATWS with the additional failure of the standby liquid control system, the operator is directed to lower water level to control power. Analysis has shown that the RHR system is capable of removing the energy generated by the ATWS from the containment (Subsection 19.3.1.3.1). If the additional failure of containment heat removal is assumed, a simple calculation indicates that the rupture disk area is just sufficient to limit the containment pressure below service level C.

Calculations were also performed to investigate the potential effects of pool swell and fission product carryover at the time of COPS operation. These analyses (Subsection 19E.2.3.5) indicate that pool swell does not threaten the integrity of the COPS piping and that no significant entrainment of fission products will occur due to carryover.

6.2.5.2.6.6 Comparison of ABWR Performance With and Without COPS

The results of the MAAP ABWR calculations for the various accident scenarios were investigated in Section 19E.2.2. The releases are summarized in Table 19E.2-25. Comparisons of CsI release fraction at 72 hours show large differences between the COPS and drywell head failure cases. CsI release fraction at 72 hours for drywell head failures is on the order of 0.1% to 37%. For all cases with release via the COPS, MAAP ABWR predicts release fractions of less than 1E-7. Table 19E.2-26 summarizes several critical parameters for the dominate low pressure core melt scenario.

There is, of course, some reduction in the elapsed time to fission product release for the COPS cases when compared to the drywell head failure cases. For the dominant accident sequences in which the operator initiates the firewater spray system prior to overpressurization, the time difference between rupture disk opening and drywell head failure is only 3 to 4 hours. A typical example is the loss of all core coolant with vessel failure at low pressure with firewater spray addition sequence (LCLP-FS), as described in Subsection 19E.2.2.1. For this sequence the wetwell pressure will reach 0.72 MPaA and the rupture disk will open at 31.1 hours. Without the rupture disk, the drywell will reach 1.025 MPa at 35.0 hours.

The potential for increased risk due to the rupture disk opening early has been considered. It is assumed that recovery of RHR capability is sufficient to terminate containment pressurization and prevent drywell head failure. In the 3.9 hours between rupture disk opening and hypothetical drywell head failure for the LCLP-FS sequence, the probability of recovering RHR capability is very small (Subsection 19.3.2.7). This represents the probability that the COPS was opened unnecessarily since RHR would have been recovered in this time period.

For cases with passive flooder operation, the fission product release occurs about 6 to 8 hours sooner than it would have if the drywell head was allowed to pressurize to 1.025 MPa. For the range of severe accident sequences described in Section 19E.2.2, the probability of RHR recovery in a similarly defined time window is small.

For both cases, there is a small probability that RHR will be recovered before the time at which containment would fail if the rupture disk setpoint has been surpassed. In light of this fact and given the difference in magnitude of the fission product release, it is clearly preferable to direct the fission products through the rupture disk.

6.2.5.2.6.7 Suppression Pool Bypass

A comparison of performance for cases with suppression pool bypass flow through an open vacuum breaker valve was also considered. Cases were run with bypass effective area varying from 5 to 2030 cm^2. A fully open vacuum breaker has an effective area of 2030 cm^2. The dominant loss of all core coolant with vessel failure at low pressure sequence was considered with passive flooder operation since previous analysis has shown that the firewater system is capable of mitigating bypass.

No credit was taken for aerosol plugging of the bypass leakage in this analysis; and, therefore, the results are conservative. Also, it was assumed that the bypass leakage was present from the beginning of the accident sequence. As the bypass area increases, the fraction of fission product aerosols which pass through the suppression pool decreases. Thus, the benefit of a wetwell release of fission products is significantly reduced as the bypass area increases.

For bypass effective areas less than 50 cm^2, CsI releases at 72 hours from the COPS cases were smaller than from the corresponding drywell head failure cases. However, the differences in CsI releases at 72 hours were only factors of 2 to 4 rather than several orders of magnitude. The time difference between drywell head failure and rupture disk opening was 4 to 8 hours for these small bypass areas. For bypass effective areas greater than 50 cm^2 CsI release fractions at 72 hours are on the order of 10% for both the drywell head failure cases and the COPS cases. On the other hand, the time difference between rupture disk opening and drywell head failure is only 2 to 4 hours for these larger bypass areas. These relatively small time differences will not significantly affect the magnitude of the offsite dose. Attachment 19EE has a complete discussion of suppression pool bypass flow through vacuum breaker valves.

6.2.5.2.6.8 Potential Impact of Hydrogen Burning and Detonation

Hydrogen burning and detonation are not a concern for the ABWR containment because the containment is inerted with nitrogen. There could be a potential for burning in the COPS system and the stack after the rupture disk opens. However, due to the design and operation of the COPS system, this issue does not have an impact on risk.

Hydrogen burning and detonation will be precluded in the piping associated with the COPS system. The piping will be inerted during operation with the rupture disk located at the inlet of the stack. This, combined with initial purging of the piping, will ensure that the inertion of the containment will extend out to the stack, and prevent burning of hydrogen in the portion of the COPS system which is within the Reactor Building. Therefore, there will be no concern of the leading edge of the containment atmosphere mixing with the gas in the piping and causing a burn. After passing of the leading edge of the gas flow, the mixture in the piping will be identical to that in the containment. The gas flow through the system will prevent the backflow of air into the COPS piping.

Hydrogen burning could occur in the plant stack as the gas flow enters the stack. The stack is a non-seismic structure located on top of the Reactor Building. Because of this configuration, the Reactor Building has been designed to withstand the loads associated with the collapse of the plant stack. Furthermore, no credit is taken in the analysis for the plant stack to reduce the offsite dose by providing for an elevated release. All releases were presumed to occur at the elevation of the top of the Reactor Building. Therefore, hydrogen burning or detonation in the stack will have no impact on the consequences of a severe accident as modeled in this analysis.

No burning will occur within the COPS piping. Furthermore, no credit was taken for the plant stack to reduce the source term to the environment and the Reactor Building can withstand the collapse of the plant stack. Therefore, hydrogen burn or detonation in the COPS system will have no impact on risk and no further consideration of this phenomenon is required.

6.2.5.2.6.9 Summary

A wetwell pressure setpoint of 617.8 kPaG for the overpressure relief rupture disk meets the design goal. The probability of containment structural failure is minimized while maximizing the time to fission product release in a severe accident. The small probability of containment structural failure if the pressure reaches the rupture disk setpoint in a severe accident, combined with the already low core damage frequency and reliable containment heat removal, produces an extremely low probability of significant fission product release. In addition, the elapsed time to rupture disk opening is greater than 24 hours for most severe accident sequences.

The net risk reduction associated with the implementation of the COPS system in the design of the ABWR is summarized in Table 19E.2-27 and Figure 19E.2-22. All sequences which would result in COPS operation were assumed to lead to failure of the drywell head. This may slightly over predict the probability of drywell head failure since there will be somewhat more time available for the recovery of containment heat removal if the COPS system were not present.

Table 19E.2-26 indicates a low probability of RHR recovery in the interval between the time of COPS initiation and the time of drywell head failure if COPS were not present. For the case with firewater addition to the containment, the probability of RHR recovery during the period of interest is 4%. Therefore, no significant error is introduced into the calculation.

Table 19E.2-27 indicates that the probability of drywell head failure increases by a factor of 50 for sequences with core damage (Class I and III) if the COPS system is not present. For Class II sequences, the loss of containment heat removal may lead to core damage for those sequences which have drywell head failure. Since the probability of drywell head failure increases by a large factor without COPS system, the core damage probability associated with Class II events also increases by the same amount. Figure 19E.2-22 shows the probability of exceedence versus whole body dose at 0.81 kilometers for the ABWR and for the ABWR without the COPS system. The offsite dose is reduced as a result of the COPS implementation into the design.

6.2.5.2.7 Flammability Control System

(1) The FCS consists of two permanently installed, safety-related thermal hydrogen recombiners with associated piping, valves, controls and instrumentation. The recombiner units are located in the secondary containment and controlled from the main control room. Each recombiner shown in Figure 6.2-40 removes gas from the drywell, recombines the oxygen with hydrogen, and returns the gas mixture along with the condensate to the suppression chamber. Each recombiner unit is an integral package consisting of a blower, electric heater, reaction chamber, water spray cooler, water separator, piping, valves, controls and instrumentation.

(2) During operation of the system, gas is drawn from the drywell by the blower and heated. Hydrogen and oxygen in the gas will be recombined into steam in the reaction chamber and condensed in the spray cooler. The condensate and spray water, along with some of the gas, are returned to the wetwell. The rest of the gas is recycled through the blower. Cooling water required for operation of the system after a LOCA is taken from the RHR system. The cooling water is used to cool the water vapor and the residual gases leaving the recombiner prior to returning them to the containment.

(3) All pressure containing equipment, including piping between components is considered an extension of the containment, and designed to ASME Section III Safety Class 2 requirements. Independent drywell and suppression chamber penetrations are provided for the two recombiners. Each penetration has two normally closed isolation valves; one pneumatically operated and one motor operated. The system is designed to meet Seismic Category I requirements. The recombiners are in separate rooms in the secondary containment and are protected from damage by flood, fire, tornadoes and pipe whip.

(4) After a LOCA, the system is manually actuated from the control room when high oxygen levels are indicated by the containment atmospheric monitoring system (CAMS). (If hydrogen is not present, oxygen concentrations are controlled by nitrogen makeup.) Operation of either recombiner will provide effective control over the buildup of oxygen generated by radiolysis after a design-basis LOCA. Once placed in operation the system continues to operate until it is manually shut down when an adequate margin below the oxygen concentration design limit is reached.

6.2.5.3 Design Evaluation

The ACS is designed to maintain the containment in an inert condition except for nitrogen makeup needed to maintain a positive containment pressure and prevent air (0_2) leakage from the secondary into the primary containment.

The primary containment atmosphere will be inerted with nitrogen during normal operation of the plant. Oxygen concentration in the primary containment will be maintained below 3.5% by volume measured on a dry basis.

During normal operation, nitrogen makeup and containment pressure control are accomplished using only the 50A supply lines. The large valves (550A) in the containment ventilation lines are closed and flow to the plant stack through the overpressure protection line (250A) is prevented by the rupture disk.

The following conditions assure that the large (550A) containment purge and vent lines will be isolated following a LOCA:

(1) The valves remain closed at all times during normal operation and will only be opened for inerting or de-inerting at the beginning and end of a shutdown.

(2) The valves and piping provide redundancy such that no single failure can prevent isolation of the purge and vent lines.

(3) In the event of a LOCA, the valves receive an isolation signal.

(4) The valves fail in the closed position. If electrical power to the solenoids is lost or the pneumatic pressure fails, the valves will close.

Following an accident, hydrogen concentration will increase due to the addition of hydrogen from the specified design-basis metal-water reaction. Hydrogen concentration will also increase due to radiolysis. Any increase in hydrogen concentration is of lesser concern because the containment is inerted. Due to dilution, additional hydrogen moves the operating point (O_2 Concentration) of the containment atmosphere farther from the envelope of flammability.

Containment oxygen concentration also increases due to radiolysis. During plant operation, there are no other sources of oxygen in the containment.

In the ABWR, there are no design basis events that result in core uncovery or core heatup sufficient to cause significant metal-water reaction. Therefore, per Regulatory Guide 1.7, the design basis metal/water reaction is that equivalent to the reaction of the active clad to a depth of 0.0058 mm. This is equivalent to 0.72% of the active clad. Radiolysis is calculated based on Regulatory Guide 1.7 source terms. Hydrogen and oxygen concentration profiles in containment after the design basis LOCA are provided as Figure 6.2-41.

Overpressure relief is provided to passively relieve the containment pressure, as required, by venting the wetwell atmosphere to the plant stack. Venting the wetwell airspace to the plant stack precludes an uncontrolled containment failure. Venting from the wetwell, as opposed to the drywell, takes advantage of the decontamination factor provided by the suppression pool. Venting to the stack provides a monitored, elevated release.

Details of the effect of overpressure relief on ABWR performance goals are found in Subsections 19.5.2 and 19.5.3.

Unintended opening of the COPS rupture disk is highly unlikely. Unintended operation at a lower pressure, such as during a design basis accident, would not significantly affect offsite doses, since no fuel failures would be expected. Failure of the rupture disk would be required for this unintended operation. In addition, the butterfly valves could be closed if inline radiation monitoring indicated unexplained flow in the relief line.

6.2.5.4 Tests and Inspections

Complete process systems are pressure tested to the maximum practicable extent. Piping systems will be hydrostatically tested in their entirety, utilizing available valves or temporary plugs. Hydrostatic testing of piping systems will be performed at a pressure 1.5 times the design pressure, but in no case at less than 519.8 kPaG. The test pressure will be held for a minimum of 30 minutes. Pneumatic testing may be substituted for hydrostatic testing in accordance with the applicable codes.

Preoperational testing will demonstrate the ability of the ACS to meet design requirements. Each valve will be exercised both opened and closed and position indication verified. Trip and alarm logic signals will also be checked. The tests assure correct functioning of all controls, instrumentation, compressors, recombiners, piping and valves. System reference characteristics, such as pressure differentials and flow rates, are documented during the preoperational tests and are used as base points for measurements in subsequent operational tests.

During plant operation, the ACS, its valves, instrumentation, wiring and other components outside the containment can be inspected visually at any time. Testing frequencies of the ACS components are generally correlated with testing frequencies of the associated controls and instrumentation. When a valve control is tested, the operability of that valve and its associated instrumentation are generally tested by the same action. In addition, inservice inspection and

testing of all ASME Section III, Class 3 components is done in accordance with Subsections 6.6.5 and 3.9.6, respectively.

Preoperational tests of the ACS and FCS are conducted during the final stages of plant construction prior to initial startup.

The overpressure protection concept was designed to minimize any adverse impact on normal operation or maintenance. Initially, several rupture disks from a batch of rupture disk could be tested to verify the opening characteristics and setpoint. The disk would be replaced every five years according to normal industry practice. The installation of the disk would not impact containment leakage tests, since disk integrity is expected to be essentially perfect.

The overpressure protection valves would be tested during preoperational testing and periodically during inservice testing (Subsection 3.9.6), to verify their normally open position and their ability to close using AC power and pneumatic air.

6.2.5.5 Instrumentation Requirements

Separate inerting flow indication to both the drywell and wetwell are provided. Drywell pressure and makeup flow are monitored and recorded in the main control room. Additional drywell pressure instrumentation, with a lower setpoint, is provided in addition to the redundant, safety-grade drywell pressure instrumentation of the Nuclear Boiler System. If drywell pressure exceeds a given setpoint, the nitrogen makeup flow is shut off as the inerting valves are closed. The temperature of the makeup and inerting vaporizers nitrogen outlet are monitored. Low makeup vaporizer nitrogen outlet temperature alarms (only) in the main control room. Auxiliary steam feeding the main inerting vaporizer(s) is controlled to regulate the inerting vaporizer nitrogen outlet temperature. Low inerting vaporizer nitrogen outlet temperature sounds a local alarm and low-low temperature isolates the main inerting line. It is intended that the local panel be attended full-time during all main inerting operations. All locally-mounted instruments are easily read from the local ACS panel. Keylocked switches in the main control room are provided to override the containment isolation signal to the valves, providing nitrogen makeup to the drywell and wetwell and the small 50A pipe size drywell vent line. Position indication in the main control room is provided for all remotely-operated valves.

Backup purge and the addition of makeup nitrogen is initiated at the operator’s discretion.

Design details and logic of the instrumentation are discussed in Chapter 7.

As discussed in Subsection 6.2.5.2, safety-grade oxygen monitoring is provided in the wetwell and drywell by the CAMS. This monitoring function, when used during normal operation, determines when the primary containment is inert and nitrogen purging may be terminated. It also determines when primary containment is de-inerted and personnel re-enter procedures may be initiated.

The CAMS oxygen monitors assure safe personnel entry into the primary containment after shutdown. In addition, CAMS assures that the primary containment is in an inert condition during startup, normal and abnormal operation conditions. This system has a measurement range of 0 to 25% (by volume) at 100% relative humidity. The minimum and maximum inlet temperature to the oxygen monitor will be 10°C and 65°C, respectively. Two sample points are provided in both the drywell and wetwell, high and low in their respective compartments and in opposing quadrants. Each airlock can also be sampled.

The sample lines are sized and sloped to assure draining condensation to the containment.There are no loops in the sample lines which could collect water and block flow. The oxygen monitors provide indication outside of the primary containment where necessary (for example, at and in each airlock) to assure safe operator access into first the airlock and then the containment.

The CAMS oxygen analyzing system is provided to indicate the concentration of oxygen inside the containment during reactor operation, and to aid in maintaining the oxygen concentration below a safety limit prescribed in the plant Technical Specifications. The oxygen analyzing system readings are not used as a basis for determining when drywell entry criteria are not met. The only role of this system related to drywell purging for re-entry is to indicate when oxygen levels are high enough to start taking the samples that will be used for determining compliance with entry criteria.

6.2.5.6 Personnel Safety

Entry into a nitrogen atmosphere is particularly hazardous due to the fact that the body cannot easily detect relative changes in the nitrogen content of the air. Low oxygen causes blood chemistry changes that can lead to an automatic increase in breathing rate, leading to hyperventilation. The individual can lose consciousness in 20 to 40 seconds and be totally unable to save himself.

A general procedure which outlines the critical items to be included in any procedure controlling purged drywell entry is provided below. This procedure is intended to be a framework of minimum requirements for drywell entry and for general guidance. The COL applicant will provide specific, detailed site procedures and administrative controls to meet the specific needs of each particular physical plant and administrative setup.

General Procedure Drywell Entrance Control Following De-inerting

(1) Inerting and de-inerting of the drywell shall be in conformance with applicable Technical Specifications.

(2) Personnel access to the drywell is normally prohibited at all times when the drywell has an oxygen-deficient atmosphere, unless an emergency condition arises, in which case the procedure outlined in Subsection 6.2.5.6(8) should be followed.

(3) The status of the drywell atmosphere shall be posted at the drywell entrance at all times, and the entrance locked, except when cleared for entry.

(4) Suitable authorization, control and recording procedures shall be established and remain in effect throughout the entry process.

(5) Prior to initial entry, the drywell shall be purged with air in accordance with operating procedure until drywell samples indicate that the following conditions are met:

(a) Oxygen: Greater than 16.5% content by volume.

(b) Hydrogen: Less than 14% of the lower limit of flammability, or a limit of 0.57% hydrogen by volume. (The lower flammability limit is 4.1% hydrogen content by volume.)

(c) Carbon Monoxide: Less than 100 ppm.

(d) Carbon Dioxide: Less than 5000 ppm.

(e) Airborne Activity: Less than applicable limits in 10CFR20, or equivalent.

(6) During the purge, drywell atmosphere samples shall be drawn from a number of locations when the drywell oxygen analyzer indicates an oxygen concentration of 16.5% or greater.

Samples shall be analyzed for oxygen, hydrogen, carbon monoxide, carbon dioxide and airborne activity.

When the results of two successive samples taken at least one-half hour apart are found to be within the conditions in Subsection 6.2.5.6(5), initial entry may be authorized.

(7) Criteria for entry are:

(a) The initial entry will require a minimum of two (2) persons.

(b) Initial entry will require, in addition to normal protective clothing and protective equipment consisting of self-contained breathing apparatus (such as Scott Air Pack), portable air sampling and monitoring equipment, and portable radiation survey meters.

(c) A means of communication shall be established.

(8) Under certain conditions, the Station Superintendent may deem that an emergency condition exists which would justify drywell entry with an oxygen-deficient atmosphere.

When it has been determined from the results of the initial entry survey and samples that the entire drywell atmosphere meets the required conditions, the drywell may be cleared for general access and the drywell status posted at the drywell entrance.

6.2.6 Containment Leakage Testing

This section includes criteria for the containment integrated leakage rate test (Type A test), containment penetration leakage rate test (Type B test) and containment isolation valve leakage rate test (Type C test) that complies with 10CFR50, Appendix J and General Design Criteria 52, 53 and 54 in 10CFR50, Appendix A.

Testing requirements for piping penetration isolation barriers and valves have been established using the intent of General Design Criterion 54, as interpreted in 10CFR50 Appendix J.

Structural integrity tests of the containment, as described in Subsection 3.8.1, will be satisfactorily completed prior to performance of the preoperational integrated leakage rate tests.

Periodic Type A, B and C tests will be performed to assure that leakage through the containment and systems and components that penetrate primary containment do not exceed allowable leakage rate values specified in the standard technical specifications. Maintenance and repairs will be performed during the service life of the containment including repairs on systems and components penetrating the containment to restore any leakage paths to acceptable values.

6.2.6.1 Containment Integrated Leakage Rate Test

6.2.6.1.1 Initial Integrated Leak Rate Test

After completion of construction of the primary reactor containment, including installation of all portions of mechanical, fluid, electrical and instrumentation systems penetrating the containment pressure boundary, and upon satisfactory completion of all structural integrity tests, the preoperational integrated leakage rate Type A tests will be conducted to meet the requirements of 10CFR50 Appendix J.

6.2.6.1.1.1 Objectives

Objectives of the initial integrated leak rate test (ILRT) follow:

(1) Verify that the total measured integrated leakage rate, L_{am}, does not exceed the containment design basis accident (DBA) leakage rate, L_a*, which is 0.5% (excluding MSIV leakage) by weight of the contained atmosphere in 24 h, at a calculated peak containment internal pressure, P_a, related to the DBA.

* See Appendix J of 10CFR50 for definition of all terms.

(2) Calculate a maximum allowable leakage rate, L_t, at reduced pressure, P_t, which will be used during subsequent integrated leakage rate tests.

(3) Obtain data which may be used to develop the leakage rate characteristics and history of the containment system.

(4) Demonstrate by a verification test the accuracy of the integrated leakage rate instrumentation to satisfactorily determine the containment integrated leakage rate.

6.2.6.1.1.2 Preoperational Test Procedure

The preoperational test will be conducted in two phases per "Preoperational Leakage Rate Tests". The first phase of the test will be performed with the containment vessel pressurized to pressure P_t, not less than 0.50 P_a to measure a leakage rate, identified as L_{tm}. The second phase is then conducted at pressure P_a resulting in a measured leakage rate identified as L_{am}. The absolute method shall be employed for determining the leakage rate (ANSI N45.4 Subsection 5.2.1 and Section 7.9). Test duration of each phase shall be sufficient for pressure and temperature stabilization. To ensure uniform temperature distribution, fans will be provided to circulate air in the containment during the test. Prior to commencement of the tests, the test prerequisites described in Subsections 6.2.6.1.2.1 and 6.2.6.1.3 will be met.

6.2.6.1.1.3 Supplement Verification Test

The accuracy of the leakage rate tests is verified by using a supplemental method of leakage measurement. Verification is obtained by superimposing a controlled and measurable leak on the normal containment leakage rate or other methods of demonstrated equivalency. The difference between the total leakage and the superimposed known-leakage results in the actual leakage rate. This leakage rate is a check against its accuracy and is acceptable provided the correlation between the supplemental test data and integrated leak test data demonstrates an agreement within $\pm$ 25%. Conduct of the verification test is normally accomplished after completion of each test phase of the ILRT. Complete descriptive details are found in Appendix C of ANSI N45.4.

6.2.6.1.1.4 Instrumentation Requirements

Instrumentation provided to monitor the containment leakage rate testing is designed, calibrated and tested to accurately ensure that the containment atmosphere parameters can be precisely measured.

6.2.6.1.1.5 Acceptance Criteria

The initial allowable leakage rate (L_{tm}) at test pressure P_t shall not exceed 75% of the maximum allowable test leakage rate (L_t), where L_t is defined as follows:

$$L_t = L_a \frac{L_{tm}}{L_{am}} \quad \text{for values of } \frac{L_{tm}}{L_{am}} \leq 0.7 \tag{6.2-1}$$

$$L_t = L_a \left(\frac{P_t}{Pa}\right)^{\frac{1}{2}} \quad \text{for values of } \frac{L_{tm}}{L_{am}} > 0.7 \tag{6.2-2}$$

The leakage L_{am} shall be less than 0.75 L_a and not greater than the design leakage rate (L_d).

6.2.6.1.2 Periodic Leakage Rate Tests

Leakage rate tests are conducted periodically in conformance to Appendix J of 10CFR50 to ensure that the integrity of the containment is maintained and to determine if any leakage increase has developed since the previous ILRT. The tests are performed at regular intervals, after major repairs or upon indication of excessive leakage, as specified in the standard Technical Specification for the ABWR.

6.2.6.1.2.1 Integrated Leakage Rate Test (ILRT, Type A)

Type A tests are conducted periodically, following the initial preoperational tests, at test pressure P_t only. Except for the elimination of the P_a pressure test, all ILRTs follow the same format as the initial ILRT, as outlined in Subsection 6.2.6.1.1.

In addition to the normal test prerequisites, the following requirements are mandatory prior to all periodic Type A tests:

(1) A detailed visual examination of critical areas and general inspection of the accessible interior and exterior surfaces of the containment structure and components shall be performed to uncover any evidence of structural deterioration which may affect either the structural integrity or leaktightness of the containment. If there is evidence of significant structural deterioration, Type A tests shall not be performed until corrective action is taken in accordance with approved repair procedures. If leak repairs of testable components are performed, the reduction in leakage shall be measured (at test pressure P_t) and added to the Type A test result.

Except for inspections and actions taken above, no preliminary leak detection surveys and repairs shall be performed prior to the conduct of the Type A test.

(2) Closure of containment isolation valves shall be accomplished by normal mode of actuation and without preliminary exercises or adjustments. All malfunctions and subsequent corrective actions shall be reported to the NRC.

6.2.6.1.2.2 Acceptance Criteria

The measured leakage rate L_{tm} shall not exceed 0.75 L_t as established by the initial ILRT.

(1) If during a Type A test (including the supplemental test) potentially excessive leakage paths are identified which will interfere with satisfactory completion of the test, or which result in the Type A test not meeting the acceptance criteria, the Type A test shall be terminated and the leakage through such paths shall be measured using local leakage testing methods. Repairs and/or adjustments to equipment shall be made and a Type A test performed. The corrective action taken and the change in leakage rate determined from the tests and overall integrated leakage determined from the local leak and Type A tests shall be included in the report submitted to the NRC.

(2) If any Type A test fails to meet the acceptance criteria, prior to corrective action, the test schedule applicable to subsequent Type A tests shall be subject to NRC review and approval.

(3) If two consecutive periodic Type A tests fail to meet the applicable acceptance criteria, prior to corrective action (notwithstanding the established periodic retest schedule), a Type A test shall be performed at each plant shutdown for major refueling, or approximately every 18 months, whichever occurs first, until two consecutive Type A tests meet the acceptance criteria, after which time the previously established periodic retest schedule may be resumed.

6.2.6.1.2.3 Test Frequency

After initial ILRT, a set of three Type A tests shall be performed at approximately equal intervals during each 10-year service period, with the third test of each set coinciding with the end of each 10-year major inservice inspection shutdown. In addition, any major modification or replacement of components of the primary reactor containment performed after the initial ILRT shall be followed by either a Type A or a Type B test of the area affected by the modification, with the affected area to meet the applicable acceptance criteria. The basis for the frequency of testing is established in accordance with 10CFR50 Appendix J.

6.2.6.1.3 Additional Criteria for Integrated Rate Test

(1) Those portions of fluids systems that are part of the reactor coolant pressure boundary, that are open directly to the primary reactor containment atmosphere under post-accident conditions and become an extension of the boundary of the primary reactor containment, shall be opened or vented to the containment atmosphere prior to or during the Type A test. Portions of closed systems inside the containment that penetrate the primary containment and are not relied upon for containment isolation purposes following a LOCA shall be vented to the containment atmosphere.

(2) All vented systems shall be drained of water to the extent necessary to ensure exposure of the system primary containment isolation valves to the containment air test pressure.

(3) Those portions of fluid systems that penetrate the primary containment, that are external to containment and are not designed to provide a containment isolation barrier, shall be vented to the outside atmosphere, as applicable, to assure that full post-accident differential pressure is maintained across the containment isolation barrier.

(4) Systems that are required to maintain the plant in a safe condition during the Type A test shall be operable in their normal mode and are not vented.

(5) Systems that are normally filled with water and operating under post-LOCA conditions need not be vented.

(6) ILRT results from items 4 and 5 above shall be added to the ILRT results.

6.2.6.2 Containment Penetration Leakage Rate Test (Type B)

6.2.6.2.1 General

Containment penetrations whose designs incorporate resilient seals, bellows, gaskets, or sealant compounds, airlocks and lock door seals, equipment and access hatch seals, and electrical canisters, and other such penetrations are leak tested during preoperational testing and at periodic intervals thereafter in conformance to Type B leakage rate tests defined in 10CFR50 Appendix J. A list of all containment penetrations is provided in Table 6.2-8. The leak tests ensure the continuing structural and leak integrity of the penetrations.

To facilitate local leak testing, a permanently installed system may be provided, consisting of a pressurized gas source (nitrogen or air) and the manifolding and valving necessary to subdivide the testable penetrations into groups of two to five. Each group is then pressurized, and if any leakage is detected (by pressure decay or flow meter), individual penetrations can be isolated and tested until the source and nature of the leak is determined. All Type B tests are performed at containment peak accident pressure, Pa. The local leak detection tests of Type B and Type C (Subsection 6.2.6.3) must be completed prior to the preoperational or periodic Type A tests.

See Subsection 6.2.7.5 for COL license information pertaining to containment penetration leak rate testing (Type B).

6.2.6.2.2 Acceptance Criteria

The combined leakage rate of all components subject to Type B and Type C tests shall not exceed 60% of L_a. If repairs are required to meet this limit, the results shall be reported in a

separate summary to the NRC. The summary shall include the structural conditions of the components which contributed to failure.

All Type B tests are performed at containment peak accident pressure P_a. The acceptance criteria are given in Chapter 16.

6.2.6.2.3 Retest Frequency

In compliance with the requirement of Section III.D.2(a) of 10CFR50 Appendix J, Type B tests (except for air locks) are performed during each reactor shutdown for major fuel reloading, or other convenient intervals, but in no case at intervals greater than two years.* Airlocks opened during periods when containment integrity is required will be tested in manual mode within three days of being opened. If the airlock is to be opened more frequently than once every three days, the airlock will be tested at least once every three days during the period of frequent openings. Airlocks will be tested at initial fuel loading, and at least once every six months thereafter. Airlocks may be tested at full power so as to avoid shutting down. These airlocks contain no inflatable seals.

Main control room readout of time to next test, test completion and test results is provided. An alarm sounds if the specified interval passes without a test being affected. No direct, safety-related function is served by the seal test instrumentation system.

6.2.6.2.4 Design Provisions for Periodic Pressurization

In order to assure the capability of the containment to withstand the application of peak accident pressure at any time during plant life for the purpose of performing ILRTs, close attention is given to certain design and maintenance provisions. Specifically, the effects of corrosion on the structural integrity of the containment are compensated for by the inclusion of a 60-year service life corrosion allowance, where applicable. Other design features that have the potential to deteriorate with age, such as flexible seals, are carefully inspected and tested as outlined in Subsection 6.2.6.2.2. In this manner, the structural and leakage integrity of the containment remains essentially the same as originally accepted.

6.2.6.3 Containment Isolation Valve Leakage Rate Test (Type C)

6.2.6.3.1 General

Type C tests will be performed on all containment isolation valves required to be tested per 10CFR50 Appendix J. All testing is performed pneumatically, except hydraulic testing may be performed on isolation valve Type C tests using water as a sealant provided that the system line for the valve is not a potential containment atmosphere leak path.

* In compliance with the requirement of Section III.D.2(b)(iii) of Appendix J to 10CFR50

Type C tests (like Type B test) are performed by local pressurization using either pressure decay or flowmeter method. The test pressure is applied in the same direction as when the valve is required to perform its safety function, unless it can be shown that results from tests with pressure applied in a different direction are equivalent or conservative. For the pressure decay method, test volume is pressurized with air or nitrogen to at least P_a. The rate of decay of pressure of the known test volume is monitored to calculate leakage rate. For the flowmeter method, required pressure is maintained in the test volume by making up air, nitrogen or water (if applicable) through a calibrated flowmeter. The flowmeter fluid flow rate is the isolation valve (or Type B test volume) leakage rate.

All isolation valve seats which are exposed to containment atmosphere subsequent to a LOCA are tested with air or nitrogen at containment peak accident pressure, P_a.

MSIVs and isolation valves isolated from a sealing system will use a test pressure of at least P_a.

Those valves which are in lines designed to be, or remain, filled with a liquid for at least 30 days subsequent to a loss-of-coolant accident are leakage rate tested with that liquid. The liquid leakage measured is not converted to equivalent air leakage nor added to the Type B and C test total.

All test connections, vent lines, or drain lines consisting of double barrier (e.g., two valves in series, one valve and a cap, or one valve and a flange), that are connected between isolation valves and form a part of the primary containment boundary need not be Type-C tested due to their infrequent use and multiple barriers as long as the barrier configurations are maintained using an administrative control program. These lines are surveillance inspected at cold shutdown and at 31 day intervals (internal and external to primary containment respectively) as required by the Technical Specifications.

For Type C testing of containment penetrations, all testing will be done in the correct direction unless it can be shown that testing in the reverse direction is equivalent, or more conservative. The correct direction for this design is defined as flow from inside the containment to outside the containment.

6.2.6.3.2 Acceptance Criteria

The combined leakage rate of all components subject to Type B (Subsection 6.2.6.2) and Type C tests shall not exceed 60% of L_a. If repairs are required to meet this limit, the results shall be reported in a separate summary to the NRC, to include the structural conditions of the components which contributed to the failure.

6.2.6.4 Scheduling and Reporting of Periodic Tests

The periodic leakage rate test schedules for Type A, B and C tests are described in Chapter 16.

Type B and C tests may be conducted at any time during normal plant operations or during shutdown periods, as long as the time interval between tests for any individual Type B or C tests does not exceed two years. Each time a Type B or C test is completed, the overall total leakage rate for all required Type B and C tests is updated to reflect the most recent test results. In addition to the periodic tests, any major modification, replacement of component which is part of the primary reactor containment boundary, or resealing a seal welded door, performed after the preoperational leakage rate test will be followed by either a Type A, B, or C test, as applicable for the area affected by the modification. Type A, B and C test results shall be submitted to the NRC in the summary report approximately three months after each test.

Included in the leak rate test summary report will be a report detailing the containment inspection, a report detailing any repairs necessary to pass the tests, and the leak rate test results.

6.2.6.5 Special Testing Requirements

The maximum allowable leakage rate into the secondary containment and the means to verify that the inleakage rate has not been exceeded, as well as the containment leakage rate to the environment, are discussed in Subsections 6.2.3 and 6.5.1.3.

6.2.7 COL License Information

6.2.7.1 Alternate Hydrogen Control

The COL applicant shall provide a comparison of costs and benefits for alternate hydrogen control in accordance with Subsection 6.2.5.

6.2.7.2 Administrative Control Maintaining Containment Isolation

The COL applicant shall maintain the primary containment boundary by administrative controls in accordance with Subsection 6.2.6.3.1.

6.2.7.3 Suppression Pool Cleanliness

The COL applicant shall propose for NRC staff review, acceptable methods to maintain suppression pool cleanliness in support of preventing ECCS suction strainer plugging in accordance with Subsection 6.2.1.7 and Appendix 6C.

6.2.7.4 Wetwell-to-Drywell Vacuum Breaker Protection

The COL applicant shall propose for NRC staff review, appropriate design features providing complete structural shielding of vacuum breaker valves from pool swell loads. The structural shielding features will be designed for pool swell loads determined based on the methodology approved for Mark II/III designs. For the design of structural shielding features, pool swell loads to the maximum practical extent will be defined.

6.2.7.5 Containment Penetration Leakage Rate Test (Type B)

The COL applicant shall perform Type B leakage rate tests in conformance with 10CFR50 Appendix J for containment penetrations whose designs incorporate resilient seals, bellows, gaskets, or sealant compounds, airlocks and lock door seals, equipment and access hatch seals, and electrical canisters, and other such penetrations. (See Subsection 6.2.6.2.1)

6.2.7.6 Confirmation of FWLB Feedwater Side Mass Flow and Enthalpy

The COL applicants will confirm the conservatism of the assumed mass flow and enthalpy for the feedwater side of the FWLB break flow after the detailed condensate and feedwater system designs and procurement of major equipment are completed (e.g., piping lengths and pump characteristics). (Subsection 6.2.1.1.3.3.1)

6.2.7.7 Confirmation of Drywell Connecting Vent (DCV) Minimum Free Flow Area

The COL applicants will confirm that the minimum unobstructed cross-sectional area in each DCV is 1.13 m^2.

6.2.8 References

6.2-1 W.J. Bilanin, “The G.E. Mark III Pressure Suppression Containment Analytical Model”, June 1974 (NEDO-20533).

6.2-2 F.J. Moody, “Maximum Discharge Rate of Liquid-Vapor Mixtures from Vessels”, General Electric Company, Report No. NEDO-21052, September 1975.

6.2-3 W.J. Bilanin, “The G.E. Mark III Pressure Suppression Containment Analytical Model”, Supplement 1, September 1975 (NEDO-20533-1).

6.2-4 J.P. Dougherty, “SCAM-Subcompartment Analysis Method”, January 1977 (NEDE-21526).

Table 6.2-1 Containment Parameters

	Design Parameter	Design Value	Calculated Value
1.	Drywell pressure	309.9 kPaG	283.4kPaG
2.	Drywell temperature	171.1°C	177.2°C
3.	Wetwell pressure	309.9 kPaG	205.6 kPaG
4.	Wetwell temperature		
	• Gas Space	124°C	98.8°C
	• Suppression pool	97.2°C	88.7°C
5.	Drywell-to-wetwell differential pressure	+172.6 kPaD – 13.7 kPaD	+168.9 kPaG – 3.86 kPaG

Table 6.2-2 Containment Design Parameters

	Drywell	Wetwell
A. Drywell and Wetwell*		
1. Internal Design Pressure (kPaG)	309.9	309.9
2. Negative Design Pressure (kPaG)	–13.7	–13.7
3. Design Temperature (°C)	171.1	124
4. Net Free Volume (m^3)	7350	5960
5. Maximum allowable leak rate†(%/day)	0.5	0.5
6. Minimum Suppression Pool Water Volume (m^3)	—	3455
7. Suppression pool depth (m)		
Low Level	—	6.9
High Level	—	7.1
B. Vent System		
1. Number of Vents		30
2. Nominal Vent Diameter (m)		0.7
3. Total Vent Area (m^2)		11.6
4. Vent Centerline Submergence		
Low Level, (m)		
Top Row		3.4
Middle Row		4.8
Bottom Row		6.1
5. Vent Loss Coefficient		
(Varies with number of vents open)		2.5– 5.0

* Items A.1, A.2, A.3 and A.5 apply to related structures including lower drywell access tunnels, drywell equipment hatches, drywell personnel locks and drywell head.

† Corresponds to calculated peak containment pressure related to the design basis accident conditions. Excludes MSIV leakage.

Table 6.2-2a Engineered Safety Systems Information for Containment Response Analyses

	Full Capacity	Containment Analysis Value
A. Containment Spray		
1. Number of RHR Pumps	2*	1*
2. Number of Lines	2*	1*
3. Number of Heat Exchangers	2†	1†
4. Drywell Flow Rate (kg/h)	0.84×10^6	0.84×10^6
5. Wetwell Flow Rate (kg/h)	1.14×10^5	1.14×10^5
B. Containment Cooling System		
1. Number of RHR Pumps	3	2
2. Pump Capacity (m^3/h/pump)	954	954
3. RHR Heat Exchangers		
a. Type–U-tube,		
b. Number	3	2
c. Heat Transfer Area (m^2/unit)	5	5
d. Overall Heat Transfer Coefficent (Btu/h—m^2-°C/unit)	5	5
e. Reactor Cooling Water Flowrate (m^3/h)	1200	1200
f. Maximum Cooling Water Inlet Temperature (°C)	35	35

* Two redundant loops available with one pump each.

† One header each for drywell and wetwell.

Table 6.2-2b Net Positive Suction Head (NPSH) Available to RHR Pumps

A. Suppression pool is at its minimum depth, El. –3740 mm.

B. Centerline of pump suction is at El. –7200 mm.

C. Suppression pool water is at its maximum temperature for the given operating mode, 100°C.

D. Pressure is atmospheric above the suppression pool.

E. Minimum suction strainer area as committed to by Appendix 6C methods.

NPSH available = $H_{ATM} + H_S - H_{VAP} - H_F$

where:

H_{ATM} = Atmospheric head

H_S = Static head

H_{VAP} = Vapor pressure head

H_F = Maximum Frictional head including strainer allowed

Minimum Expected NPSH

RHR Pump Runout is 1130 m^3/h.

Maximum suppression pool temperature is 100°C.

H_{ATM} =10.78m

H_S =3.46m

H_{VAP} =10.78m

H_F =0.71m

NPSH available = 10.78 + 3.46 – 10.78 – 0.71 = 2.75m

NPSH required = 2.4m

Margin =0.35m = NPSH available – NPSH required

Table 6.2-2c Net Positive Suction Head (NPSH) Available to HPCF Pumps

A. Suppression pool is at its minimum depth, El. –3740 mm.

B. Centerline of pump suction is at El. –7200 mm.

C. Suppression pool water is at its maximum temperature for the given operating mode, 100°C.

D. Pressure is atmospheric above the suppression pool.

E. Minimum suction strainer area as committed to by Appendix 6C methods.

NPSH available = $H_{ATM} + H_S - H_{VAP} - H_F$

where:

H_{ATM} = Atmospheric head

H_S = Static head

H_{VAP} = vapor pressure head

H_F = Maximum Frictional head including strainer allowed

Minimum Expected NPSH

HPCF Pump Runout is 890 m^3/h.

Maximum suppression pool temperature is 100°C

H_{ATM} = 10.78m

H_S = 3.46m

H_{VAP} = 10.78m

H_F = 0.91m

NPSH available = 10.78 + 3.46 – 10.78 – 0.91 = 2.55m

NPSH required = 2.2m

Margin = 0.35 = NPSH available – NPSH required

Table 6.2-2d Secondary Containment Design and Performance Data

Description	Unit	Value
A.Secondary Containment Design		
1.Free Volume	m^3	8.5×10^4
2.Pressure, mm of water, gauge	mm H_2O	–6.4
3.Leak Rate at Post-accident pressure (% of Secondary Containment Free Volume)	%/day	50
4.Exhaust Fans		
Number	—	2
Type	—	Centrifugal
5.Filters		
a.Basic specification		
Number of filter train	—	1
Type	—	Dust
b.Component specification		
(1)Prefilter		
Number of set	—	1
Type	—	Dry
(2)HEPA filters		
Number of set	—	2
Type (Material)		Glass fiber
(3)Charcoal adsorber		
Number of set	—	1
Type	—	Deep bed
B.Transient Analysis		
1.Initial conditions		
a.Primary Containment		
(1)Pressure	kPa	106.5
(2)Temperature	°C	57.2
(3)Outside air temperature		
Summer operation	°C	46.1
Winter operation	°C	–40.0
b.Secondary Containment		
(1)Pressure	mm H_2O	–6.4
(2)Temperature		
Max value in summer	°C	40
Min value in winter	°C	10
2.Thickness of Secondary Containment Wall		
thickness range form	m	0.3–1.5
3.Thickness of Primary Containment Wall		
a.Concrete Wall	m	2.0
b.Liner Plate	mm	6.4

Table 6.2-2d Secondary Containment Design and Performance Data (Continued)

Description	Unit	Value	
C.Thermal Characteristics		Drywell	Wetwell
1.Primary Containment Wall			
a.Coefficient of Linear Expansion			
Concrete Wall	m/m°C	0.33×10^{-5}	0.33×10^{-5}
Liner Plate	m/m°C	0.37×10^{-5}	0.51×10^{-5}
b.Modulus of Elasticity			
Concrete Wall	MPa	10.3	14.5
Liner Plate	MPa	191	182.7
c.Thermal Conductivity			
Concrete Wall	W/m-K	0.93	0.93
Liner Plate	kJ/h-cm^3°C	187.6	187.6
d.Thermal Capacitance			
Concrete Wall	kJ/h-m^3°C	2023	2023
Liner Plate	kJ/h-m^3°C	3935	3935
2.Secondary Containment Wall			
a.Thermal Conductivity	W/m-K	438.3	
b.Thermal Capacitance	W/m-K	940	
3.Heat Transfer Coefficients			
a.Primary Containment—Atmosphere to Primary Containment Wall	kJ/·cm^3·°C	5.03×10^{-4}	
b.Primary Containment Wall to Secondary Containment Atmosphere	kJ/h·cm^3·°C	12.55×10^{-4}	
c.Secondary Containment Wall to Secondary Containment Atmosphere	kJ/h·cm^3·°C	12.55×10^{-4}	
d.Primary Containment Emissivity	—	0.95	
e.Secondary Containment Emissivity	—	0.95	

Table 6.2-3 Subcompartment Nodal Description

Vol. ID	Description	Volume m^3	Initial Conditions Temp °C	Pressure kPaA	Humidity %	Break# Location Volume ID	Break Line Identification	Design Ba Break Ch Cal Pea Press kPa
SS1	Steam Tunnel Reactor Build.	1948	60	101	10.0	SS1	Main Steam	58.
SS2	Steam Tunnel Betw. RB. &TB.	244	60	101	10.0	SS2	Main Steam	33.
SS3	Steam Tunnel Inside TB.	850	60	101	10.0	*	‡	‡
SS4	Steam Tunnel Inside TB.	178	60	101	10.0	‡	‡	‡
SS5	Turbine Building	144982	40	101	10.0	‡	‡	‡
SA1	RCIC Pump & Turbine Room	524	40	101	10	SA1	RCIC (Steam)	37.
SA2	RHR Pump & Heat Exchanger !	686	40	101	10	SA3	RCIC (Steam)	34.
SA3	ECCS – Div A B1F, B2F, 183F PS	279	40	101	10	SA3	RCIC (Steam)	35.
SA4	EL –8200 Corridor * !	1954	40	101	10	SA1	RCIC (Steam)	19.
SA5	EL –1700 Corridor * !	4021	40	101	10	SA1/SA3	RCIC (Steam)	18.
SA6	Staircase A * !	438	40	101	10	SA1	RCIC (Steam)	18.
SA7	Staircase B * !	394	40	101	10	SA1	RCIC (Steam)	18.
SA8	Ground and Refuling Floors * !	28317	40	101	10	SA1/SA3	RCIC (Steam)	13.
SR1	Steam Tunnel/Turbine Bldg. 1	148202	40	101	10	SR12	CUW	2.9
SR5	CUW Pipe Entr/Exit Room	108	40	101	10	SR5	CUW	32.
SR4	CUW Regener. Heat Exchanger Valve Room	144	40	101	10	SR8	CUW	38.
SR2	CUW Pipespace	36	40	101	10	SR2	CUW	45.
SR12	CUW Non-Regener. Heat Exchanger Valve Room & CUW Pump Valve Room	100	40	101	10	SR12	CUW	44.
SR8	CUW Non-Regener. & Regen. HX. Rooms	346	40	101	10	SR8	CUW	43.
SR9	EL - 8200 Corridor * !	1954	40	101	10	SR11	CUW	30.
SR11	CUW Pump Room A & B	249	40	101	10	SR11	CUW	39.
SR13	CUW Filter/Demin. Rm. B	51	40	101	10	SR13	CUW	68.
SR14	CUW Filter/Demin. Rm. A	51	40	101	10	SR14	CUW	74.
SR15	CUW Filter/Demin. Valve Room A & B	421	40	101	10	SR15	CUW	32.
SR6	Stair Case A/B * !	438	40	101	10	SR4	CUW	16.

Table 6.2-3 Subcompartment Nodal Description (Continued)

			Initial Conditions					Design Ba Break Ch
Vol. ID	Description	Volume m^3	Temp °C	Pressure kPaA	Humidity %	Break# Location Volume ID	Break Line Identification	Cal Pea Press kPa
SR7	El -1700 Corridor * !	4021	40	101	10	SR15	CUW	18.
SR10	Ground and Refuling Floors * !	28317	40	101	10	SR15	CIW	13.

*
‡ High Energy Line Break analysis inside Turbine Building is not required.
# Break in subcompartment causing maximum peak pressure
$ Design pressures are to be used in conjunction with appropriate dynamic load factors for structural evaluation.
! No RCIC or CUW High Energy Line passes through the compartment.

Table 6.2-4 Subcompartment Vent Path Description

Vent Path ID	From Volume Node ID	To Volume Node ID	Flow Choked or Unchoked	Flow Sonic or Subsonic	Vent Area (m^2)	Vent Length (m)	Head Loss Coefficient Forward	Reve
FA1	SA1	SA3	Unchoked	Subsonic	15.89	0.5	1.61	1.0
FA2	SA2	SA3			7.43	0.5	1.69	1.3
FA3	SA1	SA4			0.56	0.5	1.24	1.2
FA4	SA2	SA4			0.56	0.5	1.23	1.2
FA5	SA4	SA7			2.04	0.3	1.67	$
FA6	SA4	SA6			2.04	0.3	1.68	$
FA7	SA5	SA4			1.86	0.5	1.44	1.4
FA8	SA5	SA4			1.86	0.5	1.44	1.4
FA9	SA5	SA7			2.04	0.3	1.66	$
FA10	SA5	SA6			2.04	0.3	1.66	$
FA11	SA5	SA8			1.86	14.0	0.42	0.4
FA12	SA5	SA8			1.86	25.2	0.42	0.4
FA13	SA6	SA8			2.04	0.3	1.54	$
FA14	SA8	SA7			2.04	0.3	0.02	$
FA15	SA8	SA9			2.32	0.3	1.45	$
FA16	SA3	SA5			2.04	3.0	0.45	$
FR1	SR5	SR1			9.29	2.0	0.78	$
FR2	SR2	SR5			3.72	0.5	0.02	1.5
FR3	SR2	SR4			3.72	0.9	0.02	0.7
FR4	SR8	SR4			2.32	0.9	1.31	1.2
FR5	SR8	SR4			11.61	0.9	1.42	0.9
FR6	SR8	SR9			2.04	0.3	1.34	$
FR7	SR9	SR8			2.04	0.9	1.24	$
FR8	SR9	SR6			2.04	0.3	1.68	$
FR9	SR7	SR8			2.04	0.3	1.41	$
FR10	SR9	SR7			1.86	0.5	1.44	1.4
FR11	SR9	SR7			1.86	0.5	1.44	1.4
FR12	SR7	SR6			2.04	0.3	1.66	$
FR13	SR10	SR3			2.32	0.3	1.45	$
FR14	SR6	SR10			2.04	0.3	1.54	$
FR15	SR5	SR10			2.04	0.9	0.92	$
FR16	SR4	SR7			2.04	0.3	1.33	$
FR17	SR7	SR10			1.86	14.0	0.42	0.4
FR18	SR7	SR10			1.86	25.2	0.42	0.4
FR19	SR12	SR9			2.04	0.3	0.69	$
FR20	SR11	SR9			2.04	0.3	1.69	$
FR21	SR11	SR9			3.34	0.3	1.68	$

Table 6.2-4 Subcompartment Vent Path Description (Continued)

Vent Path ID	From Volume Node ID	To Volume Node ID	Flow Choked or Unchoked	Flow Sonic or Subsonic	Vent Area (m^2)	Vent Length (m)	Head Loss Coefficient Forward	Reve
FR22	SR14	SR13			2.79	0.9	1.30	$
FR23	SR14	SR13			2.79	0.9	1.30	$
FR24	SR13	SR2			2.79	0.9	1.30	$
FR25	SR13	SR2			2.79	0.9	1.30	$
FR26	SR15	SR7			2.04	0.3	1.60	$
FR27	SR15	SR7			3.34	0.3	1.61	$
FS1	SS1	SS2			29.69	0.3	1.58	0.4
FS2	SS2	SS3			29.69	0.3	0.49	1.7
FS3	SS3	SS4			16.19	0.3	1.76	0.4
FS4	SS2	SS5			26.00	27.7	0.56	0.6
FS5	SS4	SS5			16.19	0.3	0.48	1.6
FS6	SR5	ATM.			9.29	0.9	0.52	$
FS7	SR5	ATM.			9.29	0.9	0.52	$
FS8	SR5	ATM.			9.29	0.9	0.52	$

Notes:

$ Indicates one-directional blow-out panel. Reverse loss coefficient not applicable.

* Indicates flowpath without blowout panel.

Table 6.2-4a Flow Loss Factor

BREAK NODE	PIPE ID (m)	PIPE LENGTH (m)	PIPE FRICTION FACTOR	PIPE LOSS COEFFICIENT	MECH LO COEFI
SS1				LOSSES NOT CONSIDERED	
SS2			TYP	LOSSES NOT CONSIDERED	T
SS3				NO BREAK POSTULATED	
SS4				NO BREAK POSTULATED	
SS5				NO BREAK POSTULATED	
SA1				LOSSES NOT CONSIDERED	
SA2				NO HIGH ENERGY LINES PRESENT	
SA3				LOSSES NOT CONSIDERED	
SA4				NO HIGH ENERGY LINES PRESENT	
SA5				NO HIGH ENERGY LINES PRESENT	
SA6				NO HIGH ENERGY LINES PRESENT	
SA7				NO HIGH ENERGY LINES PRESENT	
SR1				NO BREAK POSTULATED	
SR5	0.1909	66	0.015	5.2	1
SR3				NO HIGH ENERGY LINES PRESENT	
SR4	0.1909	89	0.015	7.0	3
SR5	0.1909	56	0.015	4.4	1
SR2				NO HIGH ENERGY LINES PRESENT	
SR12				NO HIGH ENERGY LINES PRESENT	5
SR8	0.1909	93	0.015	7.3	3
SR9				NO HIGH ENERGY LINES PRESENT	
SR10				NO HIGH ENERGY LINES PRESENT	
SR11	0.1909	171		13.4	9
SR12	0.1909	98	0.015	7.7	5
SR13	0.1909	210	0.015	16.5	20
SR14	0.1909	210	0.015	16.5	20
SR15	0.1909	210	0.015	16.5	20

* Overall Loss Coefficient is limited to 100

Table 6.2-4b Mass and Energy Release Rate

Time (s)	Mass Flowrate (kg/s)	Enthalpy (Joule/gram)	Enthalpy Release Rate (kJ/s)
Break in subcompartment SA1 RCIC Pump & Turbine Room and in subcompartment SA3 ECCS Division A B1F,B2F, & B3F Pipespace (Figure 6.2-37a)			
0.00	189.9	2754.57	5.23E+05
11.00	189.9	2754.57	5.23E+05
17.00	170.8	2754.57	4.70E+05
23.00	140.4	2754.57	3.87E+05
41.00	0.0	2754.57	0.00E+00
1.00E+08	0.0	2754.57	0.00E+00
Break in subcompartment SR5 CUW Pipe Return (Figure 6.2-37c)			
0.00	782.4	1224.67	9.58E+05
3.12	782.4	1224.67	9.58E+05
3.12	655.8	1224.67	8.03E+05
9.85	655.8	1224.67	8.03E+05
9.85	376.3	1002.25	3.77E+05
59.65	376.3	1002.25	3.77E+05
59.65	376.3	923.62	3.48E+05
64.05	376.3	923.62	3.48E+05
70.56	232.1	923.62	2.14E+05
70.56	120.3	1224.67	1.47E+05
76.00	0.0	1224.67	0.00E+00
1.00E+08	0.0	0.00	0.00E+00

Table 6.2-4b Mass and Energy Release Rate (Continued)

Time (s)	Mass Flowrate (kg/s)	Enthalpy (Joule/gram)	Enthalpy Release Rate (kJ/s)
Break in subcompartment SR4 Regenerative Heat Exchanger Valve Room & Pipespace (Figure 6.2-37c)			
0.00	782.4	1224.67	9.58E+05
4.92	782.4	1224.67	9.58E+05
4.92	621.3	1224.67	7.61E+05
8.05	621.3	1224.67	7.61E+05
8.05	341.9	979.92	3.35E+05
57.85	341.9	979.92	3.35E+05
57.85	341.9	893.14	3.05E+05
64.05	341.9	893.14	3.05E+05
68.76	251.1	893.14	2.24E+05
68.76	139.4	1224.67	1.71E+05
76.00	0.0	1224.67	0.00E+00
1.00E+08	0.0	0.00	0.00E+00
Break in subcompartment SR2 CUW Pipespace (Figure 6.2-37c)			
0.00	782.4	1224.67	9.58E+05
3.66	782.4	1224.67	9.58E+05
3.66	649.5	1224.67	7.95E+05
9.31	649.5	1224.67	7.95E+05
9.31	370.0	998.53	3.70E+05
59.12	370.0	998.53	3.70E+05

Table 6.2-4b Mass and Energy Release Rate (Continued)

Time (s)	Mass Flowrate (kg/s)	Enthalpy (Joule/gram)	Enthalpy Release Rate (kJ/s)
59.12	370.0	918.50	3.40E+05
64.05	370.0	918.50	3.40E+05
70.02	240.9	918.50	2.21E+05
70.02	129.1	1224.67	1.58E+05
76.00	0.0	1224.67	0.00E+00
1.00E+08	0.0	0.00	0.00E+00
Break in subcompartment SR12 Non-Regenerative Heat Exchanger Valve Room & CUW Pump pipe space (Figure 6.2-37e)			
0.00	503.0	1058.32	5.32E+05
12.97	503.0	1058.32	5.32E+05
12.97	204.4	815.20	1.67E+05
60.29	204.4	815.20	1.67E+05
60.29	92.6	1224.67	1.13E+05
64.05	92.6	1224.67	1.13E+05
76.00	0.0	1224.67	0.00E+00
1.00E+08	0.0	0.00	0.00E+00
Break in subcompartment SR8 CUW Regenerative Heat Exchanger & Non-Regenerative Heat Exchanger (Figure 6.2-37c)			
0.00	782.4	1224.67	9.58E+05
5.14	782.4	1224.67	9.58E+05
5.14	617.1	1224.67	7.56E+05

Table 6.2-4b Mass and Energy Release Rate (Continued)

Time (s)	Mass Flowrate (kg/s)	Enthalpy (Joule/gram)	Enthalpy Release Rate (kJ/s)
7.83	617.1	1224.67	7.56E+05
7.83	337.7	976.90	3.30E+05
57.63	337.7	976.90	3.30E+05
57.63	337.7	888.95	3.00E+05
64.05	337.7	888.95	3.00E+05
68.54	252.7	1224.67	3.10E+05
68.54	141.0	1224.67	1.73E+05
76.00	0.0	1224.67	0.00E+00
1.00E+08	0.0	0.00	0.00E+00
Break in subcompartment SR11 CUW Pump A & B Rooms (Figure 6.2-37d)			
0.00	223.5	1224.67	2.74E+05
17.02	223.5	1224.67	2.74E+05
17.02	111.8	1224.67	1.37E+05
34.69	111.8	1224.67	1.37E+05
34.69	111.8	1224.67	1.37E+05
36.77	111.8	1224.67	1.37E+05
36.77	391.2	1224.67	4.79E+05
49.73	391.2	1224.67	4.79E+05
49.73	68.5	1224.67	8.39E+04
64.05	68.5	1224.67	8.39E+04
76.00	0.0	1224.67	0.00E+00

Table 6.2-4b Mass and Energy Release Rate (Continued)

Time (s)	Mass Flowrate (kg/s)	Enthalpy (Joule/gram)	Enthalpy Release Rate (kJ/s)
1.00E+08	0.0	1224.67	0.00E+00
Break in subcompartment SR13 and SR14 CUW Filter/Demin B Room CUW Filter/Demin A or B (Figure 6.2-37f & g)			
0.00	194.8	590.00	1.15E+05
9.90	194.8	590.00	1.15E+05
9.90	503.0	1167.67	5.87E+05
30.55	503.0	1167.67	5.87E+05
30.55	180.2	1065.77	1.92E+05
64.05	180.2	1065.77	1.92E+05
64.05	180.2	1065.77	1.92E+05
76.00	111.8	968.52	1.08E+05
136.42	111.8	968.52	1.08E+05
136.42	0.0	0.00	0.00E+00
1.00E+08	0.0	0.00	0.00E+00
Break in subcompartment SR15 CUW Filter/Demin A & B Valve Rooms (Figure 6.2-37h)			
0.00	503.0	999.46	5.03E+05
9.90	503.0	999.46	5.03E+05
9.90	503.0	1167.67	5.87E+05
30.55	503.0	1167.67	5.87E+05
30.55	180.2	1065.77	1.92E+05
64.05	180.2	1065.77	1.92E+05

Table 6.2-4b Mass and Energy Release Rate (Continued)

Time (s)	Mass Flowrate (kg/s)	Enthalpy (Joule/gram)	Enthalpy Release Rate (kJ/s)
64.05	180.2	1065.77	1.92E+05
76.00	111.8	968.52	1.08E+05
136.42	111.8	968.52	1.08E+05
136.42	0.0	0.00	0.00E+00
1.00E+08	0.0	0.00	0.00E+00
Break in subcompartment SS1 & SS2 (steam tunnel) Main Steamline Break (Figure 6.2-37b)			
0.0000	5142.9	2770.86	1.43E+07
0.0059	5142.9	2770.86	1.43E+07
0.0610	3596.4	2770.86	9.97E+06
0.0996	3581.9	2770.86	9.92E+06
0.3965	3537.9	2770.86	9.80E+06
0.5215	3503.9	2773.18	9.72E+06
0.9941	3111.1	2773.18	8.63E+06
1.0020	6354.2	1419.16	9.02E+06
1.1270	6172.8	1419.16	8.76E+06
1.2129	6047.2	1419.16	8.58E+06
1.6504	5417.2	1419.16	7.69E+06
1.9980	4921.1	1419.16	6.98E+06
2.4980	4215.2	1419.16	5.98E+06
2.8105	3779.8	1419.16	5.36E+06
3.4355	2915.6	1419.16	4.14E+06

Table 6.2-4b Mass and Energy Release Rate (Continued)

Time (s)	Mass Flowrate (kg/s)	Enthalpy (Joule/gram)	Enthalpy Release Rate (kJ/s)
3.9355	2222.7	1419.16	3.15E+06
4.4355	1522.3	1423.82	2.17E+06
5.1855	454.6	1428.47	6.49E+05
5.4980	2.9	1430.79	4.09E+03
5.5000	0.0	1430.79	0.00E+00
Break in subcompartment SS1 and SS2 (steam tunnel) Feedwater Line Break (Figure 6.2-37b)			
0.00	2462.1	931.1	2.29E+06
3.75	2462.1	931.1	2.29E+06
3.75	3474.1	931.1	3.23E+06
18.40	3474.1	931.1	3.23E+06
42.10	3474.1	653.6	2.27E+06
67.90	3474.1	653.6	2.27E+06
100.60	3474.1	146.5	5.09E+05
120.00	3474.1	146.5	5.09E+05
120.00	0.0	146.5	0.00E+00

Table 6.2-5 Reactor Coolant Pressure Boundary (RCPB) Influent Lines Penetrating Drywell

Drywell	Inside Drywell	Outside Drywell
Influent Line		
1. Feedwater	CV	AOCV & MOV
2. RHR Injection	TCV	MOV
3. HPCF	TCV	MOV
4. Standby liquid control	CV	MOV
5. Reactor water cleanup, reactor vessel head spray	MOV	CV, MOV
6. Recirculating internal pump seal purge water supply	CV	CV

Note:CV—Check Valve
AOCV—Air-operated check valve
MOV—Motor-operated valve
TCV—Testable check valve

Table 6.2-6 Reactor Coolant Pressure Boundary (RCPB) Effluent Lines Penetrating Drywell

Inside Drywell	Outside Drywell	Drywell
Effluent Line		
1. Main steam	GOV	GOV
2. Main steam drain	MOV	MOV
3. RCIC steam supply	MOV	MOV
4. RHR shutdown cooling supply	MOV	MOV

Table 6.2-6 Reactor Coolant Pressure Boundary (RCPB) Effluent Lines Penetrating Drywell

Inside Drywell	Outside Drywell	Drywell
5. CUW pump suction	MOV	MOV

Note:MOV—Motor-operated valve

GOV-— Gas operated valve. N_2 to open, and N_2 and/or spring to close.

Table 6.2-7 Containment Isolation Valve Information*

MPL	System	Page
B21	Nuclear Boiler	Page 6.2-140 thru Page 6.2-142
B31	Reactor Recirculation	Page 6.2-125
C41	Standby Liquid Control	Page 6.2-126
D23	Containment Atmospheric Monitoring	Page 6.2-127 thru Page 6.2-128
E11	Residual Heat Removal	Page 6.2-129 thru Page 6.2-136
E22	High Pressure Core Flooder	Page 6.2-137 thru Page 6.2-139
E31	Leak Detection & Isolation	Page 6.2-166
E51	Reactor Core Isolation Cooling	Page 6.2-144 thru Page 6.2-148
G31	Reactor Water Cleanup	Page 6.2-157 thru Page 6.2-158
G51	Suppression Pool Cleanup	Page 6.2-159
K17	Radwaste	Page 6.2-167
P11	Makeup Water (Purified)	Page 6.2-165
P21	Reactor Building Cooling Water	Page 6.2-160
P24	HVAC Normal Cooling Water	Page 6.2-161
P51	Service Air	Page 6.2-162
P52	Instrument Air	Page 6.2-163
P54	High Pressure Nitrogen Gas Supply	Page 6.2-164
T31	Atmospheric Control	Page 6.2-149 thru Page6.2-154
T49	Flammability Control	Page 6.2-155 and Page 6.2-156
See page 6.2-167 for notes		

* This table responds to NRC Questions 430.35, 430.50b. 430.50c, 430.50d and 430.50f regarding containment isolation provisions for fluid system lines and for fluid instrument lines penetrating containment within the scope of the ABWR Standard Plant. Locked closed isolation valves are identified on the P&IDs. The containment information is presented separately for each system for the MPL numbers given below.

Table 6.2-7 Containment Isolation Valve Information Reactor Recirculation System RIP Purge

Valve No.	B31-F008A-H/J/K
Tier 2 Figure	5.4-4
Applicable Basis	RG 1.11
Fluid	Demin. Reactor Water
Line Size	15A
ESF	No (d,m)
Leakage Class	(a)
Location	0
Type C Leak Test	No (d, m)
Valve Type	Excess Flow Check
Operator	N/A
Primary Actuation	Self
Secondary Actuation	N/A
Normal Position	Open
Shutdown Position	Open
Post-accident Position	Open
Power Fail Position	Open
Containment Isolation Signal [c]	N/A
Closure Time (s)	Instantaneous
Power Source (Div)	N/A
See page 6.2-167 for notes	

Table 6.2-7 Containment Isolation Valve Information Standby Liquid Control System

Valve No.	C41-F008	C41-F006A	C41-F006B
Tier 2 Figure	9.3-1	9.3-1	9.3-1
Applicable Basis	GDC 55	GDC 55	GDC 55
Fluid	Boron/Water	Boron/Water	Boron/Water
Line Size	40A	40A	40A
ESF	No	No	No
Leakage Class	(a)	(a)	(a)
Location	I	O	O
Type C Leak Test	No (w)	No (w)	No (w)
Valve Type	Swing Check	Globe	Globe
Operator	N/A	Motor	Motor
Primary Actuation	Self	Electrical	Electrical
Secondary Actuation	N/A	Manual	Manual
Normal Position	Close	Close	Close
Shutdown Position	Close	Close	Close
Post-accident Position	Close	Close	Close
Power Fail Position	As is	As is	As is
Containment Isolation Signal (c)	N/A	N/A	N/A
Closure Time (s)	Instantaneous	24	24
Power Source (Div)	N/A	I	II
See page 6.2-167 for notes			

Table 6.2-7 Containment Isolation Valve Information Containment Atmospheric Monitoring

Valve No.	D23-F001A/B	D23-F004A/B	D23-F005A/B	D23-F006A/B	D23-F007A/B	D23-F008A/B
Tier 2 Figure	7.6-7 (Sheet 2)	7.6-7 (Sheet 2)	7.6-7 (Sheet 2)	7.6-7 (Sheet 2)	7.6-7 (Sheet 2)	7.6-7(Sheet 2)
Applicable Basis	GDC 56 RG 1.11	GDC 56	GDC 56	GDC 56	GDC 56	GDC 56
Fluid	DW Atmosphere	DW Atmosphere	DW Atmosphere	WW Atmosphere	WW Atmosphere	WW Atmosphere
Line Size	20A	20A	20A	20A	20A	20A
ESF	No	No	No	No	No	No
Leakage Class	(a)	(a)	(a)	(a)	(a)	(a)
Location	O	O	O	O	O	O
Type C Leak Test	No (m)	No (f)	No (f)	No (f)	No (f)	No (f)
Valve Type	Gate	Globe	Globe	Globe	Globe	Globe
Operator	Solenoid	Motor	Motor	Motor	Motor	Motor
Primary Actuation	Electrical	Electrical	Electrical	Electrical.	Electrical	Electrical
Secondary Actuation	N/A	N/A	N/A	N/A	N/A	N/A
Normal Position	Open	Close	Close	Close	Close	Close
Shutdown Position	Close	Close	Close	Close	Close	Close
Post-accident Position	Open	Open	Open	Open	Open	Open
Power Fail Position	Open	As is	As is	As is	As is	As is
Containment Isolation Signal[(c)]	N/A	N/A	N/A	N/A	N/A	N/A
Closure Time (s)	N/A	N/A	N/A	N/A	N/A	NIA
Power Source (Div)	I/II	I/II	I/II	I/II	I/II	I/II

See page 6.2-167 for notes

Table 6.2-7 Containment Isolation Valve Information Containment Atmospheric Monitoring

Valve No.	D23-F009A/B	D23-F0010A/B	D23-F0011A/B	D23-F0012A/B	D23-F0013A/B	D23-F0014A/B
Tier 2 Figure	7.6-7 (Sheet 2)	7.6-7 (Sheet 2)	7.6-7 (Sheet 2)	7.6-7 (Sheet 2)	7.6-7 (Sheet 2)	7.6-7 (Sheet 2)
Applicable Basis	GDC 56	GDC 56	GDC 56	GDC 56	GDC 56	GDC 56
Fluid	DW Atmosphere	DW Atmosphere	DW Atmosphere	WW Atmosphere	WW Atmosphere	WW Atmosphere
Line Size	20A	20A	20A	20A	20A	20A
ESF	No	No	No	No	No	No
Leakage Class	(a)	(a)	(a)	(a)	(a)	(a)
Location	O	O	O	O	O	O
Type C Leak Test	No (f)	No (f)	No (f)	No (f)	No (f)	No (f)
Valve Type	Globe	Globe	Globe	Globe	Globe	Globe
Operator	N/A	N/A	N/A	N/A	N/A	N/A
Primary Actuation	Manual	Manual	Manual	Manual	Manual	Manual
Secondary Actuation	N/A	N/A	N/A	N/A	N/A	N/A
Normal Position	Open	Open	Open	Open	Open	Open
Shutdown Position	Open	Open	Open	Open	Open	Open
Post-accident Position	Open	Open	Open	Open	Open	Open
Power Fail Position	N/A	N/A	N/A	N/A	N/A	N/A
Containment Isolation Signal[(c)]	N/A	N/A	N/A	N/A	N/A	N/A
Closure Time (s)	N/A	N/A	N/A	N/A	N/A	N/A
Power Source (Div)	N/A	N/A	N/A	N/A	N/A	N/A

See page 6.2-167 for notes

Table 6.2-7 Containment Isolation Valve Information Residual Heat Removal System Wetwell Spray

Valve No.	E11-F019B	E11-F019C
Tier 2 Figure	5.4-10 (Sheet 5)	5.4-10 (Sheet 7)
Applicable Basis	GDC 56	GDC 56
Fluid	Water	Water
Line Size	100A	100A
ESF	Yes	Yes
Leakage Class	(a)	(a)
Location	O	O
Type C Leak Test	No (g)	No (g)
Valve Type	Gate	Gate
Operator	Motor	Motor
Primary Actuation	Electrical	Electrical
Secondary Actuation	Manual	Manual
Normal Position	Close	Close
Shutdown Position	Close	Close
Post-accident Position	Close	Close
Power Fail Position	As is	As is
Containment Isolation Signal[c]	RM	RM
Closure Time (s)	20	20
Power Source (Div)	II	III
See page 6.2-167 for notes		

Table 6.2-7 Containment Isolation Valve Information Residual Heat Removal System Drywell Spray

Valve No.	E11-F017B	E11-F018B	E11-F017C	E11-F018C
Tier 2 Figure	5.4-10 (Sheet 5)	5.4-10 (Sheet 5)	5.4-10 (Sheet 7)	5.4-10 (Sheet 7)
Applicable Basis	GDC 56	GDC 56	GDC 56	GDC 56
Fluid	Water	Water	Water	Water
Line Size	250A	250A	250A	250A
ESF	Yes	Yes	Yes	Yes
Leakage Class	(a)	(a)	(a)	(a)
Location	O	O	O	O
Type C Leak Test	No (g)	No (g)	No (g)	No (g)
Valve Type	Globe	Gate	Globe	Gate
Operator	Motor	Motor	Motor	Motor
Primary Actuation	Electrical	Electrical	Electrical	Electrical
Secondary Actuation	Manual	Manual	Manual	Manual
Normal Position	Close	Close	Close	Close
Shutdown Position	Close	Close	Close	Close
Post-accident Position	Close	Close	Close	Close
Power Fail Position	As is	As is	As is	As is
Containment Isolation Signal[c]	RM	RM	RM	RM
Closure Time (s)	50	50	50	50
Power Source (Div)	II	II	III	III
See page 6.2-167 for notes				

Table 6.2-7 Containment Isolation Valve Information Residual Heat Removal System Minimum Flow Line

Valve No.	E11-F021A	E11-F021B	E11-F021C
Tier 2 Figure	5.4-10 (Sheet 3)	5.4-10 (Sheet 4)	5.4-10 (Sheet 8)
Applicable Basis	GDC 56	GDC 56	GDC 56
Fluid	Water	Water	Water
Line Size	100A	100A	100A
ESF	Yes	Yes	Yes
Leakage Class	(a)	(a)	(a)
Location	O	O	O
Type C Leak Test	No (h)	No (h)	No(h)
Valve Type	Gate	Gate	Gate
Operator	Motor	Motor	Motor
Primary Actuation	Electrical	Electrical	Electrical
Secondary Actuation	Manual	Manual	Manual
Normal Position	Open	Open	Open
Shutdown Position	Open	Open	Open
Post-accident Position	Close	Close	Close
Power Fail Position	As is	As is	As is
Containment Isolation Signal (c)	RM	RM	RM
Closure Time (s)	20	20	20
Power Source (Div)	I	II	III
See page 6.2-167 for notes			

Table 6.2-7 Containment Isolation Valve Information Residual Heat Removal System S/P Cooling

Valve No.	E11-F008A	E11-F031A	E11-F008B	E11-F031B	E11-F008C	E11-F031C
Tier 2 Figure	5.4-10 (Sheet 3)	5.4-10 (Sheet 3)	5.4-10 (Sheet 4)	5.4-10 (Sheet 4)	5.4-10 (Sheet 6)	5.4-10 (Sheet 6)
Applicable Basis	GDC 56	GDC 56	GDC 56	GDC 56	GDC 56	GDC 56
Fluid	Water	Water	Water	Water	Water	Water
Line Size	200A	100A	200A	100A	200A	100A
ESF	Yes	Yes	Yes	Yes	Yes	Yes
Leakage Class	(a)	(a)	(a)	(a)	(a)	(a)
Location	O	O	O	O	O	O
Type C Leak Test	No (j)	No (j)	No (j)	No (j)	No (j)	No (j)
Valve Type	Globe	Globe	Globe	Globe	Globe	Globe
Operator	Motor	Motor	Motor	Motor	Motor	Motor
Primary Actuation	Electrical	Electrical	Electrical	Electrical	Electrical	Electrical
Secondary Actuation	Manual	Manual	Manual	Manual	Manual	Manual
Normal Position	Close	Close	Close	Close	Close	Close
Shutdown Position	Close	Close	Close	Close	Close	Close
Post-accident Position	Close	Close	Close	Close	Close	Close
Power Fail Position	As is	As is	As is	As is	As is	As is
Containment Isolation Signal (c)	RM, CX, K	RM	RM, CX, K	RM	RM, CX, K	RM
Closure Time (s)	50	20	50	20	50	20
Power Source (Div)	I	I	II	II	III	III

See page 6.2-167 for notes

Table 6.2-7 Containment Isolation Valve Information Residual Heat Removal System S/P Suction (LPFL)

Valve No.	E11-F001A	E11-F001B	E11-F001C
Tier 2 Figure	5.4-10 (Sheet 3)	5.4-10 (Sheet 4)	5.4-10 (Sheet 6)
Applicable Basis	GDC 56	GDC 56	GDC 56
Fluid	Water	Water	Water
Line Size	450A	450A	450A
ESF	Yes	Yes	Yes
Leakage Class	(a)	(a)	(a)
Location	O	O	O
Type C Leak Test	No (i)	No (i)	No (i)
Valve Type	Gate	Gate	Gate
Operator	Motor	Motor	Motor
Primary Actuation	Electrical	Electrical	Electrical
Secondary Actuation	Manual	Manual	Manual
Normal Position	Open	Open	Open
Shutdown Position	Close	Close	Close
Post-accident Position	Close	Close	Close
Power Fail Position	As is	As is	As is
Containment Isolation Signal (c)	RM	RM	RM
Closure Time (s)	90	90	90
Power Source (Div)	I	II	III
See page 6.2-167 for notes			

Table 6.2-7 Containment Isolation Valve Information Residual Heat Removal System Inboard Shutdown Cooling

Valve No.	E11-F010A	E11-F010B	E11-F010C
Tier 2 Figure	5.4-10 (Sheet 2)	5.4-10 (Sheet 2)	5.4-10 (Sheet 2)
Applicable Basis	GDC 55	GDC 55	GDC 55
Fluid	Water	Water	Water
Line Size	350A	350A	350A
ESF	Yes	Yes	Yes
Leakage Class	(a)	(a)	(a)
Location	I	I	I
Type C Leak Test	No (n)	No (n)	No (n)
Valve Type	Gate	Gate	Gate
Operator	Motor	Motor	Motor
Primary Actuation	Electrical	Electrical	Electrical
Secondary Actuation	Manual	Manual	Manual
Normal Position	Close	Close	Close
Shutdown Position	Close	Close	Close
Post-accident Position	Close	Close	Close
Power Fail Position	As is	As is	As is
Containment Isolation Signal [c]	RM, A, U, Z	RM, A, U, Z	RM, A, U, Z
Closure Time (s)	70	70	70
Power Source (Div)	I	II	III
See page 6.2-167 for notes			

Table 6.2-7 Containment Isolation Valve Information Residual Heat Removal System Outboard Shutdown Cooling

Valve No.	E11-F011A	E11-F011B	E11-F011C
Tier 2 Figure	5.4-10 (Sheet 2)	5.4-10 (Sheet 2)	5.4-10 (Sheet 2)
Applicable Basis	GDC 55	GDC 55	GDC 55
Fluid	Water	Water	Water
Line Size	350A	350A	350A
ESF	Yes	Yes	Yes
Leakage Class	(a)	(a)	(a)
Location	O	O	O
Type C Leak Test	No (n)	No (n)	No (n)
Valve Type	Gate	Gate	Gate
Operator	Motor	Motor	Motor
Primary Actuation	Electrical	Electrical	Electrical
Secondary Actuation	Manual	Manual	Manual
Normal Position	Close	Close	Close
Shutdown Position	Close	Close	Close
Post-accident Position	Close	Close	Close
Power Fail Position	As is	As is	As is
Containment Isolation Signal(c)	RM, A, U, Z	RM, A, U, Z	RM, A, U, Z
Closure Time (s)	70	70	70
Power Source (Div)	II	III	I
See page 6.2-167 for notes			

Table 6.2-7 Containment Isolation Valve Information Residual Heat Removal System Injection and Testable Check

Valve No.	E11-F005B	E11-F006B	E11-F005C	E11-F006C
Tier 2 Figure	5.4-10 (Sheet 5)	5.4-10 (Sheet 5)	5.4-10 (Sheet 7)	5.4-10 (Sheet 7)
Applicable Basis	GDC 55	GDC 55	GDC 55	GDC 55
Fluid	Water	Water	Water	Water
Line Size	250A	250A	250A	250A
ESF	Yes	Yes	Yes	Yes
Leakage Class	(a)	(a)	(a)	(a)
Location	O	I	O	I
Type C Leak Test	No (k)	No (k)	No (k)	No (k)
Valve Type	Gate	Check	Gate	Check
Operator	Motor	N/A	Motor	N/A
Primary Actuation	Electrical	Self	Electrical	Self
Secondary Actuation	Manual	N/A	Manual	N/A
Normal Position	Close	Close	Close	Close
Shutdown Position	Close	Close	Close	Close
Post-accident Position	Close	Close	Close	Close
Power Fail Position	As is	N/A	As is	N/A
Containment Isolation Signal[c]	RM	N/A	RM	N/A
Closure Time (s)	10	Instantaneous	10	Instantaneous
Power Source (Div)	II	N/A	III	N/A
See page 6.2-167 for notes				

Table 6.2-7 Containment Isolation Valve Information High Pressure Core Flooder System S\P Suction

Valve No.	E22-F006B	E22-F006C
Tier 2 Figure	6.3-7 (Sheet 2)	6.3-7 (Sheet 2)
Applicable Basis	GDC 56	GDC 56
Fluid	Water	Water
Line Size	400A	400A
ESF	Yes	Yes
Leakage Class	(a)	(a)
Location	O	O
Type C Leak Test	No(i)	No(i)
Valve Type	Gate	Gate
Operator	Motor	Motor
Primary Actuation	Electrical	Electrical
Secondary Actuation	Manual	Manual
Normal Position	Close	Close
Shutdown Position	Close	Close
Post-Accident Position	Close	Close
Power Fail Position	As is	As is
Containment Isolation Signal (c)	N/A	N/A
Closure Time (s)	80	80
Power Source (Div)	II	III
See page 6.2-167 for notes		

Table 6.2-7 Containment Isolation Valve Information High Pressure Core Flooder System Test and Minimum Flow

Valve No.	E22-F009B	E22-F010B	E22-F009C	E22-F010C
Tier 2 Figure	6.3-7 (Sheet 2)	6.3-7 (Sheet 2)	6.3-7 (Sheet	6.3-7 (Sheet 2)
Applicable Basis	GDC 56	GDC 56	GDC 56	GDC 56
Fluid	Water	Water	Water	Water
Line Size	200A	80A	200A	80A
ESF	Yes	Yes	Yes	Yes
Leakage Class	(a)	(a)	(a)	(a)
Location	O	O	O	O
Type C Leak Test	No(h)	No(h)	No(h)	No(h)
Valve Type	Globe	Gate	Globe	Gate
Operator	Motor	Motor	Motor	Motor
Primary Actuation	Electrical	Electrical	Electrical	Electrical
Secondary Actuation	Manual	Manual	Manual	Manual
Normal Position	Close	Close	Close	Close
Shutdown Position	Close	Close	Close	Close
Post-Accident Position	Close	Close	Close	Close
Power Fail Position	As is	As is	As is	As is
Containment Isolation Signal (c)	N/A	N/A	N/A	N/A
Closure Time (s)	20	20	20	20
Power Source (Div)	II	II	III	III
See page 6.2-167 for notes				

Table 6.2-7 Containment Isolation Valve Information High Pressure Core Flooder System Injection

Valve No.	E22-F003B	E22-F004B	E22-F003C	E22-F004C
Tier 2 Figure	6.3-7 (Sheet 1)	6.3-7 (Sheet 1)	6.3-7 (Sheet 1)	6.3-7 (Sheet 1)
Applicable Basis	GDC 55	GDC 55	GDC 55	GDC 55
Fluid	Water	Water	Water	Water
Line Size	200A	200A	200A	200A
ESF	Yes	Yes	Yes	yes
Leakage Class	(a)	(a)	(a)	(a)
Location	O	I	O	I
Type C Leak Test	No(k)	No(k)	No(k)	No(k)
Valve Type	Gate	Check	Gate	Check
Operator	Motor	Self	Motor	Self
Primary Actuation	Electrical	N/A	Electrical	N/A
Secondary Actuation	Manual	N/A	Manual	N/A
Normal Position	Close	Close	Close	Close
Shutdown Position	Close	Close	Close	Close
Post-Accident Position	Close	Close	Close	Close
Power Fail Position	As is	N/A	As is	N/A
Containment Isolation Signal [c]	N/A	N/A	N/A	N/A
Closure Time (s)	36	Instantaneous	36	Instantaneous
Power Source (Div)	II	N/A	III	N/A
See page 6.2-167 for notes				

Table 6.2-7 Containment Isolation Valve Information Nuclear Boiler System Main Steam Lines A, B, C and D

Valve No.	B21-F008A/B C/D	B21-F009A/B C/D
Tier 2 Figure	5.1-3 (Sheet 3)	5.1-3 (Sheet 3)
Applicable Basis	GDC 55	GDC 55
Fluid	Steam	Steam
Line Size	700A	700A
ESF	Yes	Yes
Leakage Class	(b)	(b)
Location	I	O
Type C Leak Test	Yes(e)(t)	Yes(e)(t)
Valve Type	Globe	Globe
Operator	Pneumatic	Pneumatic
Primary Actuation	N_2 to open N_2 and/or Spring to close	N_2 to open N_2 and/or Spring to close
Secondary Actuation	N/A	N/A
Normal Position	Open	Open
Shutdown Position	Close	Close
Post-Accident Position	Close	Close
Power Fail Position	Close	Close
Containment Isolation Signal (c)	C, D, E, F, H, N, BB, RM	C, D, E, F, H, N, BB, RM
Closure Time (s)	3-4.5	3-4.5
Power Source (Div)	I/II	I/II
See page 6.2-167 for notes		

Table 6.2-7 Containment Isolation Valve Information Nuclear Boiler System Main Steam Line Drains

Valve No.	B21-F011	B21-F012
Tier 2 Figure	5.1-3 (Sheet 3)	5.1-3 (Sheet 3)
Applicable Basis	GDC 55	GDC 55
Fluid	Steam/Water	Steam/Water
Line Size	80A	80A
ESF	Yes	Yes
Leakage Class	(b)	(b)
Location	I	O
Type C Leak Test	Yes(e)(t)	Yes(t)
Valve Type	Gate	Gate
Operator	Motor	Motor
Primary Actuation	Electrical	Electrical
Secondary Actuation	Manual	Manual
Normal Position	Open	Open
Shutdown Position	Close	Close
Post-Accident Position	Close	Close
Power Fail Position	As is	As is
Containment Isolation Signal (c)	C, D, E, F, H, N, BB, RM	C, D, E, F, H, N, BB, RM
Closure Time (s)	15	15
Power Source (Div)	II	I
See page 6.2-167 for notes		

Table 6.2-7 Containment Isolation Valve Information Nuclear Boiler System Feedwater Line A and B

Valve No.	B21-F004A/B	B21-F003A/B
Tier 2 Figure	5.1-3 (Sheet 4)	5.1-3 (Sheet 4)
Applicable Basis	GDC 55	GDC 55
Fluid	Water	Water
Line Size	550A	550A
ESF	Yes	Yes
Leakage Class	(b)	(b)
Location	I	O
Type C Leak Test	Yes(t)	Yes(t)
Valve Type	Check	Spring Check
Operator	Self	Pneumatic
Primary Actuation	N/A	Air to open
Secondary Actuation	N/A	N/A
Normal Position	Open	Open
Shutdown Position	Close	Close
Post-Accident Position	Close	Close
Power Fail Position	N/A	N/A
Containment Isolation Signal [c]	N/A	N/A
Closure Time (s)	Instantaneous	Instantaneous
Power Source (Div)	N/A	N/A
See page 6.2-167 for notes		

Table 6.2-7 Containment Isolation Valve Information Nuclear Boiler System Instrument Lines

Valve No.	Various
Tier 2 Figure	5.1-3 (Sheets 2,3,6,7,8)
Applicable Basis	RG 1.11
Fluid	Air/Water
Line Size	20A
ESF	N/A
Leakage Class	(b)
Location	O
Type C Leak Test	No(m)
Valve Type	Excess Flow Check
Operator	Self
Primary Actuation	N/A
Secondary Actuation	N/A
Normal Position	Open
Shutdown Position	Open
Post-Accident Position	Open
Power Fail Position	Open
Containment Isolation Signal (c)	N/A
Closure Time (s)	Instantaneous
Power Source (Div)	N/A
See page 6.2-167 for notes	

Table 6.2-7 Containment Isolation Valve Information Reactor Core Isolation Cooling System Steam Supply

Valve No.	E51-F035	E51-F048	E51-F036
Tier 2 Figure	5.4-8 (Sheet 2)	5.4-8 (Sheet 2)	5.4-8 (Sheet 2)
Applicable Basis	GDC 55	GDC 55	GDC 55
Fluid	Steam	Steam	Steam
Line Size	150A	25A	150A
ESF	Yes	Yes	Yes
Leakage Class	(a)	(a)	(a)
Location	I	I	O
Type C Leak Test	Yes(e)(t)	Yes(e)(t)	Yes(t)
Valve Type	Gate	Globe	Gate
Operator	Motor	Motor	Motor
Primary Actuation	Electrical	Electrical	Electrical
Secondary Actuation	Remote Manual	Remote Manual	Remote Manual
Normal Position	Open	Close	Open
Shutdown Position	Close	Close	Close
Post-Accident Position	Close	Close	Close
Power Fail Position	As is	As is	As is
Containment Isolation Signal (c)	S, T, RM,Z	S, T, RM,Z	S, T, RM,Z
Closure Time (s)	<30	<30	<30
Power Source (Div)	I	I	II
See page 6.2-167 for notes			

Table 6.2-7 Containment Isolation Valve Information Reactor Core Isolation Cooling System Minimum Flow and Test Return

Valve No.	E51-F011	E51-F009
Tier 2 Figure	5.4-8 (Sheet 1)	5.4-8 (Sheet 1)
Applicable Basis	GDC 56	GDC 56
Fluid	Water	Water
Line Size	50A	100A
ESF	Yes	Yes
Leakage Class	(a)	(a)
Location	O	O
Type C Leak Test	No(h)	No(h)
Valve Type	Globe	Globe
Operator	Motor	Motor
Primary Actuation	Electrical	Electrical
Secondary Actuation	Remote Manual	Remote Manual
Normal Position	Close	Close
Shutdown Position	Close	Close
Post-Accident Position	Close	Close
Power Fail Position	As is	As is
Containment Isolation Signal (c)	RM	RM
Closure Time (s)	<5	<60
Power Source (Div)	I	I
See page 6.2-167 for notes		

Table 6.2-7 Containment Isolation Valve Information Reactor Core Isolation Cooling System S/P Suction

Valve No.	E51-F006
Tier 2 Figure	5.4-8 (Sheet 1)
Applicable Basis	GDC 56
Fluid	Water
Line Size	200A
ESF	Yes
Leakage Class	(a)
Location	O
Type C Leak Test	No(i)
Valve Type	Gate
Operator	Motor
Primary Actuation	Electrical
Secondary Actuation	Remote Manual
Normal Position	Close
Shutdown Position	Close
Post-Accident Position	Close
Power Fail Position	As is
Containment Isolation Signal (c)	RM
Closure Time (s)	<30
Power Source (Div)	I
See page 6.2-167 for notes	

Table 6.2-7 Containment Isolation Valve Information Reactor Core Isolation Cooling System Turbine Exhaust

Valve No.	E51-F039	E51-F038
Tier 2 Figure	5.4-8 (Sheet 1)	5.4-8 (Sheet 1)
Applicable Basis	GDC 56	GDC 56
Fluid	Steam	Steam
Line Size	350A	350A
ESF	Yes	Yes
Leakage Class	(a)	(a)
Location	O	O
Type C Leak Test	Yes(e)(t)	Yes(t)
Valve Type	Gate	Check
Operator	Motor	Self
Primary Actuation	Electrical	N/A
Secondary Actuation	Manual	N/A
Normal Position	Locked Open	Close
Shutdown Position	Open	Open
Post-Accident Position	Close	Close
Power Fail Position	As is	N/A
Containment Isolation Signal [(c)]	RM	N/A
Closure Time (s)	<70	Instantaneous
Power Source (Div)	I	N/A
See page 6.2-167 for notes		

Table 6.2-7 Containment Isolation Valve Information Reactor Core Isolation Cooling System Vacuum Pump Discharge

Valve No.	E51-F047	E51-F046
Tier 2 Figure	5.4-8 (Sheet 1)	5.4-8 (Sheet 1)
Applicable Basis	GDC 56	GDC 56
Fluid	Steam	Steam
Line Size	50A	50A
ESF	Yes	Yes
Leakage Class	(a)	(a)
Location	O	O
Type C Leak Test	No(l)	No(l)
Valve Type	Gate	Check
Operator	Motor	Self
Primary Actuation	Electrical	N/A
Secondary Actuation	Manual	N/A
Normal Position	Open	Close
Shutdown Position	Open	Open
Post-Accident Position	Close	Close
Power Fail Position	As is	N/A
Containment Isolation Signal (c)	RM	N/A
Closure Time (s)	<10	Instantaneous
Power Source (Div)	I	N/A
See page 6.2-167 for notes		

Table 6.2-7 Containment Isolation Valve Information Atmospheric Control System

Valve No.	T31-F001	T31-F002	T31-F003	T31-F004	T31-F005	T31-F006	T31-F007
Tier 2 Figure	6.2-39 (Sheet 1)	6.2-39 (Sheet 1)	6.2-39 (Sheet 1)	6.2-39 (Sheet 1)	6.2-39 (Sheet 1)	6.2-39 (Sheet 1	6.2-39 (Sheet 1)
Applicable Basis	GDC 56	GDC 56	GDC 56	GDC 56	GDC 56	GDC 56	GDC 56
Fluid	Air	Air or N_2	Air or N_2	Air or N_2	Air or N_2	Air or N_2	Air or N_2
Line Size	550A	550A	550A	550A	50A	550A	250A
ESF	Yes	Yes	Yes	Yes	Yes	Yes	Yes
Leakage Class	(b)	(b)	(b)	(b)	(b)	(b)	(b)
Location	O	O	O	O	O	O	O
Type C Leak Test	Yes	Yes(e)	Yes(e)	Yes(e)	Yes(e)	Yes(e)	Yes(e)
Valve Type	Butterfly	Butterfly	Butterfly	Butterfly	Globe	Butterfly	Butterfly
Operator	Pneumatic	Pneumatic	Pneumatic	Pneumatic	Pneumatic	Pneumatic	Pneumatic
Primary Actuation	Electric	Electric	Electric	Electric	Electric	Electric	Electric
Secondary Actuation	Manual	Manual	Manual	Manual	Manual	Manual	Manual
Normal Position	Close	Close	Close	Close	Close	Close	Open
Shutdown Position	Close	Close	Close	Close	Close	Close	Open
Post-Accident Position	Close	Close	Close	Close	Close	Close	Open
Power Fail Position	Close	Close	Close	Close	Close	Close	Open
ContainmentIsolation Signal (c)	A, K, XX, YY	A, K, XX, YY	A, K, XX, YY	A, K, XX, YY	A, K, XX, YY	A, K, XX, YY	RM
Closure Time (s)	<20	<20	<20	<20	<15	<20	<20
Power Source (Div)	I	II	II	II	II	II	II

See page 6.2-167 for notes

Table 6.2-7 Containment Isolation Valve Information Atmospheric Control System

Valve No.	T31-F008	T31-F009	T31-F025	T31-F039	T31-F040	T31-F041
Tier 2 Figure	6.2-39 (Sheet 1)	6.2-39 (Sheet 1)	6.2-39 (Sheet 1)	6.2-39 (Sheet 1)	6.2-39 (Sheet 1)	6.2-39 (Sheet 1)
Applicable Basis	GDC 56	GDC 56	GDC 56	GDC 56	GDC 56	GDC 56
Fluid	Air or N_2	Air or N_2	N_2	N_2	N_2	N_2
Line Size	550A	550A	400A	50A	50A	50A
ESF	Yes	Yes	Yes	Yes	Yes	Yes
Leakage Class	(b)	(b)	(b)	(b)	(b)	(b)
Location	O	O	O	O	O	O
Type C Leak Test	Yes	Yes	Yes	Yes	Yes(e)	Yes(e)
Valve Type	Butterfly	Butterfly	Butterfly	Globe	Globe	Globe
Operator	Pneumatic	Pneumatic	Pneumatic	Pneumatic	Pneumatic	Pneumatic
Primary Actuation	Electric	Electric	Electric	Electric	Electric	Electric
Secondary Actuation	Manual	Manual	Manual	Manual	Manual	Manual
Normal Position	Close	Close	Close	Open	Open	Open
Shutdown Position	Close	Close	Close	Close	Close	Close
Post-Accident Position	Close	Close	Close	Close	Close	Close
Power Fail Position	Close	Close	Close	Close	Close	Close
Containment Isolation Signal (c)	A, K, XX, YY	A, K, XX, YY	A, K, XX, YY	A, K, XX, YY	A, K, XX, YY	A, K, XX, YY
Closure Time (s)	<20	<20	<20	<15	<15	<15
Power Source (Div)	I	I	I	I	II	II

See page 6.2-167 for notes

Table 6.2-7 Containment Isolation Valve Information Atmospheric Control System

Valve No.	T31-F731	T31-F033A/B	T31-F035A-D	T31-F010	T31-F011
Tier 2 Figure	6.2-39 (Sheet 3)	6.2-39 (Sheet 3)	6.2-39 (Sheet 3)	6.2-39 (Sheet 1)	6.2-39 (Sheet 1)
Applicable Basis	RG 1.11	RG 1.11	RG 1.11	GDC 56	GDC 56
Fluid	DW Atmosphere	DW Atmosphere	DW Atmosphere	Air or N_2	Air or N_2
Line Size	20A	20A	20A	250A	550A
ESF	No	No	No	Yes	Yes
Leakage Class	(a)	(a)	(a)	(a)	(a)
Location	O	O	O	O	O
Type C Leak Test	No(m)	No(m)	No(m)	Yes(e)	Yes(e)
Valve Type	Gate	Gate	Gate	Butterfly	Butterfly
Operator	Solenoid	Solenoid	Solenoid	Pneumatic	Pneumatic
Primary Actuation	Electric	Electric	Electric	Electric	Electric
Secondary Actuation	N/A	N/A	N/A	Manual	Manual
Normal Position	Open	Open	Open	Open	Close
Shutdown Position	Open	Open	Open	Open	Close
Post-Accident Position	Open	Open	Open	Open	Close
Power Fail Position	Open	Open	Open	Open	Close
Containment Isolation Signal (c)	RM	RM	RM	RM	A, K XX, YY
Closure Time (s)	N/A	N/A	N/A	<20	<20
Power Source (Div)	N/A	N/A	N/A	I	III

See page 6.2-167 for notes

Table 6.2-7 Containment Isolation Valve Information Atmospheric Control System

Valve No.	T31-F737A-B	T31-F739A-D	T31-F741A-D	T31-F743A/B
Tier 2 Figure	6.2-39 (Sheet 3)	6.2-39 (Sheet 2)	6.2-39 (Sheet 3)	6.2-39 (Sheet 2)
Applicable Basis	RG 1.11	RG 1.11	RG 1.11	RG 1.11
Fluid	WW Atmosphere	WW Atmosphere	SP H_20	WW Atmosphere
Line Size	20A	20A	20A	20A
ESF	No	No	No	No
Leakage Class	(a)	(a)	(a)	(a)
Location	O	O	O	O
Type C Leak Test	No(m)	No(m)	No(m)	No(m)
Valve Type	Gate	Gate	Gate	Gate
Operator	Solenoid	Solenoid	Solenoid	Solenoid
Primary Actuation	Electric	Electric	Electric	Electric
Secondary Actuation	N/A	N/A	N/A	N/A
Normal Position	Open	Open	Open	Open
Shutdown Position	Open	Open	Open	Open
Post-Accident Position	Open	Open	Open	Open
Power Fail Position	Open	Open	Open	Open
Containment Isolation Signal (c)	RM	RM	RM	RM
Closure Time (s)	N/A	N/A	N/A	N/A
Power Source (Div)	N/A	N/A	N/A	N/A
See page 6.2-167 for notes				

Table 6.2-7 Containment Isolation Valve Information Atmospheric Control System

Valve No.	T31-F745A/B	T31-F801A/B	T31-F803A/B
Tier 2 Figure	6.2-392 (Sheet 2)	6.2-39 (Sheet 3)	6.2-39 (Sheet 3)
Applicable Basis	RG 1.11	RG 1.11	RG 1.11
Fluid	SP H_20	DW Atmosphere	DW Atmosphere
Line Size	20A	20A	20A
ESF	No	No	No
Leakage Class	(b)	(b)	(b)
Location	O	O	O
Type C Leak Test	No(m)	No(m)	No(m)
Valve Type	Gate	Gate	Gate
Operator	Solenoid	Solenoid	Solenoid
Primary Actuation	Electric	Electric	Electric
Secondary Actuation	N/A	N/A	N/A
Normal Position	Open	Open	Open
Shutdown Position	Open	Open	Open
Post-Accident Position	Open	Open	Open
Power Fail Position	Open	Open	Open
Containment Isolation Signal [(c)]	RM	RM	RM
Closure Time (s)	N/A	N/A	N/A
Power Source (Div)	N/A	N/A	N/A

See page 6.2-167 for notes

Table 6.2-7 Containment Isolation Valve Information Atmospheric Control System

Valve No.	T31-F805A/B	T31-D001	T31-D002
Tier 2 Figure	6.2-39 (Sheet 3)	6.2-39 (Sheet 1)	6.2-39 (Sheet 1)
Applicable Basis	RG 1.11	GDC 56	GDC 56
Fluid	WW Atmosphere	WW Atmosphere	WW Atmosphere
Line Size	20A	250A	250A
ESF	No	Yes	Yes
Leakage Class	(a)	N/A	N/A
Location	O	O	O
Type C Leak Test	No(m)	No(P)	No (P)
Valve Type	Gate	Rupture Disk	Rupture Disk
Operator	Solenoid	Self	Self
Primary Actuation	Electric	N/A	N/A
Secondary Actuation	N/A	N/A	N/A
Normal Position	Open	Close	Close
Shutdown Position	Open	Close	Close
Post-Accident Position	Open	Open	Open
Power Fail Position	Open	N/A	N/A
Containment Isolation Signal[c]	RM	N/A	N/A
Closure Time (s)	N/A	N/A	N/A
Power Source (Div)	N/A	N/A	N/A
See page 6.2-167 for notes			

Table 6.2-7 Containment Isolation Valve Information Flammability Control System

Valve No.	T49-F001C	T49-F001B	T49-F002A	T49-F002E
Tier 2 Figure	6.2-40 (Sheet 2)	6.2-40 (Sheet 1)	6.2-40 (Sheet 1)	6.2-40 (Sheet 2)
Applicable Basis	GDC 56	GDC 56	GDC 56	GDC 56
Fluid	DW Atmosphere	DW Atmosphere	DW Atmosphere	DW Atmosphere
Line Size	100A	100A	100A	100A
ESF	Yes	Yes	Yes	Yes
Leakage Class	(a)	(a)	(a)	(a)
Location	O	O	O	O
Type C Leak Test	No(u)	No(u)	No(u)	No(u)
Valve Type	Gate	Gate	Gate	Gate
Operator	Motor	Motor	Pneumatic	Pneumatic
Primary Actuation	Electrical	Electrical	Electrical	Electrical
Secondary Actuation	Manual	Manual	Manual	Manual
Normal Position	Close	Close	Close	Close
Shutdown Position	Close	Close	Close	Close
Post-Accident Position	Open	Open	Open	Open
Power Fail Position	As is	As is	As is	As is
Containment Isolation Signal[(c)]	A,K	A,K	A,K	A,K
Closure Time (s)	<30	<30	<30	<30
Power Source (Div)	III	II	I, III	I, II
See page 6.2-167 for notes				

Table 6.2-7 Containment Isolation Valve Information Flammability Control System

Valve No.	T49-F006A	T49-F006E	T49-F007C	T49-F007B
Tier 2 Figure	6.2-40 (Sheet 1)	6.2-40 (Sheet 2)	6.2-40 (Sheet 2)	6.2-40 Sheet 1)
Applicable Basis	GDC 56	GDC 56	GDC 56	GDC 56
Fluid	WW Atmosphere	WW Atmosphere	WW Atmosphere	WW Atmosphere
Line Size	150A	150A	150A	150A
ESF	Yes	Yes	Yes	Yes
Leakage Class	(a)	(a)	(a)	(a)
Location	O	O	O	O
Type C Leak Test	No(u)	No(u)	No(u)	No(u)
Valve Type	Gate	Gate	Gate	Gate
Operator	Pneumatic	Pneumatic	Motor	Motor
Primary Actuation	Electrical	Electrical	Electrical	Electrical
Secondary Actuation	Manual	Manual	Manual	Manual
Normal Position	Close	Close	Close	Close
Shutdown Position	Close	Close	Close	Close
Post-Accident Position	Open	Open	Open	Open
Power Fail Position	As is	As is	As is	As is
Containment Isolation Signal(c)	A,K	A,K	A,K	A,K
Closure Time (s)	<30	<30	<30	<30
Power Source (Div)	I, III	I, II	III	II
See page 6.2-167 for notes				

Table 6.2-7 Containment Isolation Valve Information Reactor Water Cleanup System

Valve No.	G31-F002	G31-F003	G31-F017	G31-F018
Tier 2 Figure	5.4-12 (Sheet 1)	5.4-12 (Sheet 1)	5.4-12 (Sheet 1)	5.4-12 (Sheet 1)
Applicable Basis	GDC 55	GDC 55	GDC 55	GDC 55
Fluid	RPV H_2O	RPV H_2O	RPV H_2O	RPV H_2O
Line Size	200A	200A	150A	150A
ESF	Yes(e)(t)	Yes(t)	Yes(t)	Yes(t)
Leakage Class	(a)	(a)	(a)	(a)
Location	I	O	O	I
Type C Leak Test	Yes(e)(t)	Yes(t)	Yes(t)	Yes(t)
Valve Type	Gate	Gate	Gate	Check
Operator	Motor	Motor	Motor	Self
Primary Actuation	Electrical	Electrical	Electrical	N/A
Secondary Actuation	Manual	Manual	Manual	N/A
Normal Position	Open	Open	Close	Close
Shutdown Position	Open	Open	Close	Close
Post-Accident Position	Close	Close	Close	Close
Power Fail Position	As is	As is	As is	N/A
Containment Isolation Signal[c]	B,F,V,Z,AA	B,F,V,Z,CC,AA	B,F,V,Z,CC,AA	N/A
Closure Time (s)	<30	<30	<30	Instantaneous
Power Source (Div)	II	I	I	N/A

See page 6.2-167 for notes

Table 6.2-7 Containment Isolation Valve Information Reactor Water Cleanup System

Valve No.	G31-F700A/B	G31-F701A/B	G31-F702A/B	G31-F703A/B
Tier 2 Figure	5.4-12 (Sheet 1)	5.4-12 (Sheet 1)	5.4-12 (Sheet 1)	5.4-12 (Sheet 1)
Applicable Basis	GDC 55 RG 1.11	GDC 55 RG 1.11	GDC 55 RG 1.11	GDC 55 RG 1.11
Fluid	RPV H_2O	RPV H_2O	RPV H_2O	RPV H_2O
Line Size	20A	20A	20A	20A
ESF	No	No	No	No
Leakage Class	(a)	(a)	(a)	(a)
Location	O	O	O	O
Type C Leak Test	No(m)	No(m)	No(m)	No(m)
Valve Type	Globe	Globe	XS Check	XS Check
Operator	Manual	Manual	Self	Self
Primary Actuation	N/A	N/A	N/A	N/A
Secondary Actuation	N/A	N/A	N/A	N/A
Normal Position	Open	Open	Open	Open
Shutdown Position	Open	Open	Open	Open
Post-Accident Position	Close	Close	Close	Close
Power Fail Position	N/A	N/A	N/A	N/A
Containment Isolation Signal[(c)]	N/A	N/A	N/A	N/A
Closure Time (s)	N/A	N/A	Instantaneous	Instantaneous
Power Source (Div)	N/A	N/A	N/A	N/A
See page 6.2-167 for notes				

Table 6.2-7 Containment Isolation Valve Information Suppression Pool Cleanup System

Valve No.	G51-F001	G51-F002	G51-F006	G51-F007
Tier 2 Figure	9.5-1	9.5-1	9.5-1	9.5-1
Applicable Basis	GDC 56	GDC 56	GDC 56	GDC 56
Fluid	Water	Water	Water	Water
Line Size	200A	200A	250A	250A
ESF	Yes	Yes	Yes	Yes
Leakage Class	(a)	(a)	(a)	(a)
Location	O	O	O	O
Type C Leak Test	No(p)	No(p)	No(q)	No(q)
Valve Type	Gate	Gate	Check	Gate
Operator	Motor	Motor	Self	Motor
Primary Actuation	Electrical	Electrical	N/A	Electrical
Secondary Actuation	Manual	Manual	N/A	Manual
Normal Position	Close	Close	Open	Close
Shutdown Position	Open	Open	Open	Open
Post-Accident Position	Close	Close	N/A	Close
Power Fail Position	As is	As is	N/A	As is
Containment Isolation Signal[c]	A,K	A,K	N/A	A,K
Closure Time (s)	<30	<30	Inst.	<30
Power Source (Div)	II	I	N/A	II
See page 6.2-167 for notes				

Table 6.2-7 Containment Isolation Valve Information Reactor Building Cooling Water System

Valve No.	P21-F075A /F076A	P21-F081A /F080A	P21-F075B /F076B	P21-F081B /F080B
Tier 2 Figure	9.2-1 (Sheet 3)	9.2-1 (Sheet 3)	9.2-1 (Sheet 6)	9.2-1 (Sheet 6)
Applicable Basis	GDC 57	GDC 57	GDC 57	GDC 57
Fluid	Water	Water	Water	Water
Line Size	200A	200A	200A	200A
ESF	Yes	Yes	Yes	Yes
Leakage Class	(b)	(b)	(b)	(b)
Location	O/I	O/I	O/I	O/I
Type C Leak Test	No(s)	No(s)	No(s)	No(s)
Valve Type	Gate/Check	Gate/Gate	Gate/Check	Gate/Gate
Operator	Motor/NA	Motor/Motor	Motor/NA	Motor/Motor
Primary Actuation	Electrical	Electrical	Electrical	Electrical
Secondary Actuation	Manual	Manual	Manual	Manual
Normal Position	Open	Open	Open	Open
Shutdown Position	Open	Open	Open	Open
Post-Accident Position	Close	Close	Close	Close
Power Fail Position	As is	As is	As is	As is
Containment Isolation Signal[(c)]	CX,K	CX,K	CX,K	CX,K
Closure Time (s)	80/Instantan-eous	80/80	80/Instantan-eous	80/80
Power Source (Div)	I/N/A	I/II	I/N/A	I/II
See page 6.2-167 for notes				

Table 6.2-7 Containment Isolation Valve Information HVAC Normal Cooling Water System

Valve No.	P24-F053	P24-F054	P24-F0142	P21-F0141
Tier 2 Figure	9.2-2	9.2-2	9.2-2	9.2-2
Applicable Basis	GDC 57	GDC 57	GDC 57	GDC 57
Fluid	Water	Water	Water	Water
Line Size	100A	100A	100A	100A
ESF	No	No	No	No
Leakage Class	(b)	(b)	(b)	(b)
Location	O	I	O	I
Type C Leak Test	Yes(t)	Yes(t)	Yes(t)	Yes(t)
Valve Type	Gate	Check	Gate	Gate
Operator	Motor	Self	Motor	Motor
Primary Actuation	Electrical	N/A	Electrical	Electrical
Secondary Actuation	HW	N/A	HW	N/A
Normal Position	Open	Open	Open	Open
Shutdown Position	Open	Open	Open	Open
Post-Accident Position	Close	N/A	Close	Close
Power Fail Position	As is	N/A	As is	As is
Containment Isolation Signal[(c)]	CX,K	N/A	CX,K	CX,K
Closure Time (s)	25	Instantaneous	25	25
Power Source (Div)	I	N/A	I	III
See page 6.2-167 for notes				

Table 6.2-7 Containment Isolation Valve Information Service Air System

Valve No.	P51-F131	P51-F132
Tier 2 Figure	9.3-7 (Sheet 2)	9.3-7 (Sheet 2)
Applicable Basis	GDC 57	GDC-57
Fluid	Air	Air
Line Size	25A	25A
ESF	No	No
Leakage Class	(b)	(b)
Location	O	I
Type C Leak Test	Yes	Yes
Valve Type	Globe	Check
Operator	HW	Self
Primary Actuation	Manual	N/A
Secondary Actuation	N/A	N/A
Normal Position	Close	Close
Shutdown Position	Open	Open
Post-Accident Position	Close	Close
Power Fail Position	N/A	N/A
Containment Isolation Signal[c]	N/A	N/A
Closure Time (s)	N/A	Instantaneous
Power Source (Div)	N/A	N/A
See page 6.2-167 for notes		

Table 6.2-7 Containment Isolation Valve Information Instrument Air System

Valve No.	P52-F276	P52-F277
Tier 2 Figure	9.3-6 (Sheet 1)	9.3-6 (Sheet 1)
Applicable Basis	GDC 57	GDC 57
Fluid	N_2	N_2
Line Size	50A	50A
ESF	No	No
Leakage Class	(b)	(b)
Location	O	I
Type C Leak Test	Yes	Yes
Valve Type	Globe	Check
Operator	Motor	Self
Primary Actuation	Electrical	N/A
Secondary Actuation	HW	N/A
Normal Position	Open	Open
Shutdown Position	Open	Open
Post-Accident Position	Close	Close
Power Fail Position	As is	N/A
Containment Isolation Signal[(c)]	RM	N/A
Closure Time (s)	20	Instantaneous
Power Source (Div)	I	N/A
See page 6.2-167 for notes		

Table 6.2-7 Containment Isolation Valve Information High Pressure Nitrogen Gas Supply System

Valve No.	P54-F007A/F008A	P54-F007B/F008B	P54-F200/F209
Tier 2 Figure	6.7-1	6.7-1	6.7-1
Applicable Basis	GDC 57	GDC 57	GDC 57
Fluid	N_2	N_2	N_2
Line Size	50A	50A	50A
ESF	Yes	Yes	Yes
Leakage Class	(b)	(b)	(b)
Location	O/I	O/I	O/I
Type C Leak Test	No(r)	No(r)	Yes
Valve Type	Globe/Check	Globe/Check	Globe/Check
Operator	Motor/Self	Motor/Self	Motor/Self
Primary Actuation	Electrical/N/A	Electrical/N/A	Electrical/N/A
Secondary Actuation	HW/N/A	HW/N/A	HW/N/A
Normal Position	Open	Open	Open
Shutdown Position	Open	Open	Open
Post-Accident Position	Close	Close	Close
Power Fail Position	As Is/N/A	As Is/N/A	As Is/N/A
Containment Isolation Signal[(c)]	GG (Y)	GG(Y)	GG(Y)
Closure Time (s)	30 / Instantaneous	30 / Instantaneous	30 / Instantaneous
Power Source (Div)	I/N/A	II/N/A	I/N/A
See page 6.2-167 for notes			

Table 6.2-7 Containment Isolation Valve Information Makeup Water System (Purified)

Valve No.	P11-F141	P11-F142
Tier 2 Figure	9.2-5 (Sheet 2)	9.2-5 (Sheet 2)
Applicable Basis	GDC 56	GDC 57
Fluid	Water	Water
Line Size	50A	50A
ESF	No	No
Leakage Class	(b)	(b)
Location	O	I
Type C Leak Test	Yes	Yes
Valve Type	Globe	Check
Operator	Manual	Self
Primary Actuation	N/A	N/A
Secondary Actuation	N/A	N/A
Normal Position	Close	Close
Shutdown Position	Open	Open
Post-Accident Position	Close	Close
Power Fail Position	N/A	N/A
Containment Isolation Signal[(c)]	N/A	N/A
Closure Time (s)	N/A	Instantaneous
Power Source (Div)	N/A	N/A
See page 6.2-167 for notes		

Table 6.2-7 Containment Isolation Valve Information Leak Detection & Isolation System

Valve No.	E31-F002	E31-F003	E31-F004	E31-F005	E31-F009/ F010	E31-F702/ F704 A/B/C/D
Tier 2 Figure	5.2-8 (Sheet 9)	5.2-8 (Sheet 9)	5.2-8 (Sheet 9)	5.2-8 (Sheet 9)	5.2-8 (Sheet 8)	5.2-8 (Sheet 6)
Applicable Basis	GDC 56	GDC 56	GDC 56	GDC 56	GDC 57	RG 1.11
Fluid	Air	Air	Air	Air	Water	Steam
Line Size	32A	32A	32A	32A	20A	20A
ESF	Yes	Yes	Yes	Yes	Yes	No
Leakage Class	(a)	(a)	(a)	(a)	(a)	(a)
Location	O	O	O	O	O	O
Type C Leak Test	Yes(e)	Yes(e)	Yes(e)	Yes(e)	Yes(e)(t)	No(m)
Valve Type	Globe	Globe	Globe	Globe	Globe	Excess Flow Check
Operator	Pneumatic	Pneumatic	Pneumatic	Pneumatic	N/A	Self
Primary Actuation	Air	Air	Air	Air	Manual	N/A
Secondary Actuation	N/A	N/A	N/A	N/A	N/A	N/A
Normal Position	Open	Open	Open	Open	Close	Open
Shutdown Position	Close	Close	Close	Close	Close	Open
Post-Accident Position	Close	Close	Close	Close	Close	Open
Power Fail Position	Close	Close	Close	Close	N/A	Open
Containment Isolation Signal[(c)]	B,K	B,K	B,K	B,K	N/A	N/A
Closure Time (s)	<15	<15	<15	<15	N/A	Instan-tane-ous
Power Source (Div)	I	II	II	I	N/A	N/A

See page 6.2-167 for notes

Table 6.2-7 Containment Isolation Valve Information Radwaste System

Valve No.	K17-F003	K17-F004	K17-F103	K17-F104
Tier 2 Figure	11A.2-2 (Sheet 29)	11A.2-2 (Sheet 29)	11A.2-2 (Sheet 30)	11A.2-2 (Sheet 30)
Applicable Basis	GDC 57	GDC 57	GDC 57	GDC 57
Fluid	LCW H_20	LCW H_20	HCW H_20	HCW H_20
Line Size	65A	65A	65A	65A
ESF	No	No	No	No
Leakage Class	(b)	(b)	(b)	(b)
Location	I	O	I	O
Type C Leak Test	No(v)	No(v)	No(v)	No(v)
Valve Type	Gate	Gate	Gate	Gate
Operator	Motor	Motor	Motor	Motor
Primary Actuation	Electrical	Electrical	Electrical	Electrical
Secondary Actuation	Manual	Manual	Manual	Manual
Normal Position	Open	Open	Open	Open
Shutdown Position	Open	Open	Open	Open
Post-Accident Position	Close	Close	Close	Close
Power Fail Position	As Is	As Is	As Is	As Is
Containment Isolation Signal(c)	A/FF	FF	A/FF	FF
Closure Time (s)	<30	<30	<30	<30
Power Source (Div)	II	I	II	I

Notes:

(a) Termination Region: Secondary Containment

(b) Termination Region: Main Condenser, Turbine Building, Bypass Leakage Barrier: Redundant Primary Containment Isolation Valves.

(c) Isolation Signal Codes

Signal	Description
A	Reactor vessel low water level–Level 3.
B	Reactor vessel low water level–Level 2.

Signal	Description
C	Reactor vessel low water level–Level 1.5.
CX	Reactor vessel low water level–Level 1.
D	High radiation–main steamline.
E	Line break–main steamline (steamline high steam flow).
F	Line break–main steamline (steamline high tunnel temperature).
H	Line break–main steamline (steamline high turbine building temperature.)
J	Turbine Building high temperature.
K	High drywell pressure.
L	RHR injection valve low pressure.
M	Line break in RHR shutdown.
N	Low main condenser vacuum.
S	Line break in RCIC System steamline to turbine (low steamline pressure).
T	High pressure RCIC turbine exhaust diaphragm.
U	Reactor high pressure.
V	Close-through electrical interlocks with other valves or pump motors.
W	Condensate storage tank low level.
X	Suppression pool low level.
XX	High Radiation–R/B HVAC exhaust air
Y	RCIC
YY	High Radiation–Refueling floor exhaust air
Z	Equipment area temperature high

Signal	Description
AA	Differential mass flow high
BB	Low main steamline pressure at inlet to turbine (RUN mode only).
CC	Line break in Reactor Water Cleanup System (high space temperature).
DD	Containment pressure.
EE	High differential flow in the reactor water cleanup system.
FF	High radiation–process line
RM	Remote manual switch from control room (All automatic initiated isolation valves are capable of remote manual operation from the control room).

(d) This line is filled with water and pressurized higher than 110% of the post-accident peak containment pressure. Line is small and postulated failure is considered less severe than instrument line.

(e) Leakage testing may be performed in the reverse direction in the absence of test connections and/or isolable test boundaries in the upstream side of the valve relative to the leakage flow direction (i.e., from inside to outside primary containment). The results are conservative or equivalent to the normal direction as described below:

(1) For globe valves including MSIVs, testing in the reverse direction is conservative, since the test pressure tends to lift the plug from the seat.

(2) For gate valves and butterfly valves, leakage characteristics for these types of valves are similar in both directions provided seat construction is designed for sealing on either side.

(f) These lines are CAM System sample lines that continuously monitor (sample) post-accident containment atmosphere. These lines are safety grade closed loop extension of the primary containment. Sampled gases (or leakage if any) are returned to the primary containment. In addition, these lines are subject to periodic Type-A test whose leaktight integrity can be verified.

(g) The RHR drywell and wetwell spray lines are always filled with water in the outboard side, thereby providing water seal. The seal is maintained at a pressure higher than 110% of the post-accident peak containment pressure by jockey pumps and/or hydrostatic head; thus precluding leakage.

Furthermore, these valves are required to open post-LOCA to provide containment cooling function. When this function is activated, flow direction is towards the containment.

(h) The ECCS (RHR, HPCF and RCIC) test return and minimum flow lines terminate below the suppression pool water level and are sealed from the containment atmosphere by the suppression pool water. The outboard side of the valve (away from the containment) is always filled with water and pressurized higher than 110% of the post-accident peak containment pressure as in(g) above.

(i) The ECCS (RHR, HPCF and RCIC) suction lines are always filled with water, since the suction lines are located below the suppression pool water, level and are sealed from the containment atmosphere.

(j) The RHR suppression pool cooling discharge line is the same line used for system flow or pump flow testing. See (h) above.

(k) The ECCS (RHR, HPCF and RCIC) injection lines are always filled withwater up to the outboard isolation valves, thereby forming a water seal. These water seals are kept pressurized higher than 110% of the post-accident containment pressure as in (g) above. Furthermore, these valves are subject to ASME/ANSI OMa-1988 Addenda to ASME/ANSI OM-1987, Part 10, leak rate tests.

(l) RCIC vacuum pump discharge line terminates below the suppression pool water level and is sealed from the containment atmosphere.

(m) Instrument lines that penetrate the primary containment conform to Regulatory Guide 1.11. The lines that connect to the reactor pressure boundary include a restricting orifice inside containment, are Seismic Category I, and terminate in Seismic Category I instruments. The instrument lines also include manual maintenance valves and excess flow check isolation valves or equivalent. These lines are normally open, and are considered an extension of the primary containment whose integrity is continuously demonstrated during normal operation. In addition, these lines are subject to periodic Type A tests. Leaktight integrity is also verified during functional and surveillance activities as well as visual observations during operator tours.

(n) The outboard side of the RHR shutdown cooling suction valves are sealed with water since RHR pump and suction lines are located below the suppression pool water level. This is a closed-loop water seal, since RHR is a closed loop system always filled with water.

(o) Furthermore, these valves are subject to ASME leak rate tests as in (k) above.

(p) Rupture discs are normally closed and sealed from leakage. The opening setpoint of these rupture discs is higher than primary containment test pressures. Additionally, these rupture discs are subject to the Type A test.

(q) SPCU suction line is always filled with water, since it is located below the suppression pool water level and is sealed from the containment atmosphere.

(r) SPCU return line terminates below the suppression pool water level and is sealed from the containment atmosphere.

(s) The outboard side of these valves is always pressurized with nitrogen gas at a pressure higher than the post-accident peak containment pressure. The nitrogen supply in these lines is required for post-accident mitigating function.

(t) The outboard side of these valves is always filled with water and pressurized above 110% post-accident peak containment pressure. These lines are kept charged with cooling water for cooling emergency equipment necessary for post-accident mitigation.

(u) Line will be drained and tested with air.

(v) Flammability control is a closed-loop, safety-grade system required to be functional post-accident. Whatever is leaking (if any) is returned to the primary containment. In addition, during ILRT, these valves are opened and the lines are subjected to Type A test.

(w) These lines terminate below the drywell sumps water level and are sealed from the containment atmosphere.

(x) The outboard side of these valves are provided with a water leg. In addition, these valves are subject to ASME leak tests as in (k) above.

(y) Not applicable.

Table 6.2-9 Primary Containment Penetration List*

Penetration Number	Name	Elevation (mm)	Azimuth (deg)	Offset (mm)	Diameter (mm)	Barrier Type	Testing†‡
X-1	U/D Equipment Hatch	19170	130	0	2600	Door	B
X-2	U/D Personnel Hatch	19170	230	0	2400	Door	B
X-3	ISI Hatch	19500	145	0	200	Door	B
X-4	Wetwell Access Hatch	6400	45	0	2000	Door	B
X-5	L/D Personnel Hatch	-650	0	0	2400/5000	Door	B
X-6	L/D Equipment Hatch	-900	180	0	2400/5000	Door	B
X-10A	Mainsteam Line	16300	0	1400	1200		A
X-10B	Mainsteam Line	16300	0	4200	1200		A
X-10C	Mainsteam Line	16300	0	-4200	1200		A
X-10D	Mainsteam Line	16300	0	-1400	1200		A
X-11	Mainsteam Drain	13650	0	5200	500		A
X-12A	Feedwater Line	13810	0	2800	950		A
X-12B	Feedwater Line	13810	0	-2800	950		A
X-22	Borated Water Injection	15250	275	0	450		A
X-30B	Drywell Spray	14680	260	-3400	200		A
X-30C	Drywell Spray	14680	100	3400	200		A
X-31A	HPCF (B)	14630	260	0	600		A
X-31B	HPCF (C)	14630	100	0	600		A
X-32A	LPFL (B) RHR (B)	14610	260	-2000	650		A
X-32B	LPFL (C) RHR (C)	14610	100	-1800	650		A
X-33A	RHR Suction (A)	14550	80	-800	750		A
X-33B	RHR Suction (B)	14550	260	1800	750		A
X-33C	RHR Suction (C)	14550	100	2000	750		A

* This table provided in response to Questions 430.49d & e.
† All penetrations will be subject to the Type A test. Those penetrations subject to Type B testing are also tested in the Type A test.
‡ All penetrations excluded from Type B testing are welded penetrations and do not include resilient seals in their design.

Table 6.2-9 Primary Containment Penetration List* (Continued)

Penetration Number	Name	Elevation (mm)	Azimuth (deg)	Offset (mm)	Diameter (mm)	Barrier Type	Testing†‡
X-37	RCIC Turbine Steam	14450	80	1200	550		A
X-38	RPV Head Spray	14450	310	1500	550		A
X-50	CUW Pump Feed	14480	310	0	600		A
X-60	MUWP Suction	13500	290	0	200		A
X-61	RCW Suction (A)	13500	45	-3000	200		A
X-62	RCW Return (A)	13500	45	-2000	200		A
X-63	RCW Suction (B)	13500	225	3400	200		A
X-64	RCW Return (B)	13500	225	2400	200		A
X-65	HNCW Suction	13500	225	250	350		A
X-66	HNCW Return	13500	225	1400	350		A
X-69	SA	19000	42	0	90		A
X-70	IA	9000	46	0	200		A
X-71A	ADS Accumulator (A)	19000	50	0	200		A
X-71B	ADS Accumulator (B)	19000	296.5	1000	200		A
X-72	Relief Valve Accumulator	19000	296.5	2000	200		A
X-80	Drywell Purge Suction	13700	68	0	550		A
X-81	Drywell Purge Exhaust	19000	216	0	550		A
X-82	FCS Suction	14850	225	-600	150		A
X-90	Spare	20100	46	0	400		A
X-91	Spare	20100	296.5	1000	400		A
X-92	Spare	16400	45	12700	400		A
X-93	Spare	14700	135	-500	400		A
X-100A	RIP Power	13500	55	-1100	450	O-ring	B

* This table provided in response to Questions 430.49d & e.
† All penetrations will be subject to the Type A test. Those penetrations subject to Type B testing are also tested in the Type A test.
‡ All penetrations excluded from Type B testing are welded penetrations and do not include resilient seals in their design.

Table 6.2-9 Primary Containment Penetration List* (Continued)

Penetration Number	Name	Elevation (mm)	Azimuth (deg)	Offset (mm)	Diameter (mm)	Barrier Type	Testing†‡
X-100B	RIP Power	13500	180	2650	450	O-ring	B
X-100C	RIP Power	13500	180	-6550	450	O-ring	B
X-100D	RIP Power	13500	280	0	450	O-ring	B
X-100E	RIP Power	13500	180	-2650	450	O-ring	B
X-101A	LP Power	16400	45	0	300	O-ring	B
X-101B	LP Power	16400	180	50	300	O-ring	B
X-101C	LP Power	16400	180	-1350	300	O-ring	B
X-101D	FMCRD Power	19000	279.5	1350	300	O-ring	B
X-101E	FMCRD Power	19000	81	-1350	300	O-ring	B
X-101F	FMCRD Power	19000	260.5	-1350	300	O-ring	B
X-101G	FMCRD Power	19000	99	-1350	300	O-ring	B
X-102A	I & C	16400	45	-1350	300	O-ring	B
X-102B	I & C	16400	180	1350	300	O-ring	B
X-102C	I & C	16400	180	-2650	300	O-ring	B
X-102D	I & C	16100	280	0	300	O-ring	B
X-102E	I & C	19000	99	-1350	300	O-ring	B
X-102F	I & C	19000	273.5	-1350	300	O-ring	B
X-102G	I & C	13500	180	-1350	300	O-ring	B
X-103A	I & C	16400	45	1350	300	O-ring	B
X-103B	I & C	13500	180	50	300	O-ring	B
X-103C	I & C	16400	180	-5250	300	O-ring	B
X-103D	1 & C	16400	180	2650	300	O-ring	B
X-103E	1 & C	16400	45	2700	300	O-ring	B
X-104A	FMCRD Position Indicator	19000	81	0	300	O-ring	B
X-104B	FMCRD Position Indicator	19000	260.5	0	300	O-ring	B

* This table provided in response to Questions 430.49d & e.
† All penetrations will be subject to the Type A test. Those penetrations subject to Type B testing are also tested in the Type A test.
‡ All penetrations excluded from Type B testing are welded penetrations and do not include resilient seals in their design.

Table 6.2-9 Primary Containment Penetration List* (Continued)

Penetration Number	Name	Elevation (mm)	Azimuth (deg)	Offset (mm)	Diameter (mm)	Barrier Type	Testing†‡
X-104C	FMCRD Position Indicator	20100	99	0	300	O-ring	B
X-104D	FMCRD Position Indicator	20100	279.5	0	300	O-ring	B
X-104E	FMCRD Position Indicator	19000	81	1350	300	O-ring	B
X-104F	FMCRD Position Indicator	19000	260.5	1350	300	O-ring	B
X-104G	FMCRD Position Indicator	19000	99	0	300	O-ring	B
X-104H	FMCRD Position Indicator	19000	279.5	0	300	O-ring	B
X-105A	Neutron Detection	20100	81	1350	300	O-ring	B
X-105B	Neutron Detection	20100	260.5	1350	300	O-ring	B
X-105C	Neutron Detection	20100	99	-5250	300	O-ring	B
X-105D	Neutron Detection	20100	279.5	1350	300	O-ring	B
X-110	FCS Suction	13500	55	1000	300	O-ring	B
X-111	Spare	13500	280	1350	300	O-ring	B
X-112	Spare	13500	180	-5250	300	O-ring	B
X-113	Spare	13500	180	1350	300	O-ring	B
X-130A	I & C	13500	45	0	300	O-ring	B
X-130B	I & C	13500	212	0	300	O-ring	B
X-130C	I & C	13500	124	0	300	O-ring	B
X-130D	I & C	13500	295	0	300	O-ring	B
X-140A	I & C	13500	45	-27000	300	O-ring	B
X-140B	I & C	13500	300	0	300	O-ring	B
X-141A	I & C	13500	63.5	0	300	O-ring	B
X-141B	I & C	13500	275	0	300	O-ring	B

* This table provided in response to Questions 430.49d & e.
† All penetrations will be subject to the Type A test. Those penetrations subject to Type B testing are also tested in the Type A test.
‡ All penetrations excluded from Type B testing are welded penetrations and do not include resilient seals in their design.

Table 6.2-9 Primary Containment Penetration List* (Continued)

Penetration Number	Name	Elevation (mm)	Azimuth (deg)	Offset (mm)	Diameter (mm)	Barrier Type	Testing†‡
X-142A	I & C	20100	38	0	90	O-ring	B
X-142B	I & C	20100	244	0	90	O-ring	B
X-142C	I & C	20100	116	0	90	O-ring	B
X-142D	I & C	20100	296.5	2000	90	O-ring	B
X-143A	I & C	14700	45	0	90	O-ring	B
X-143B	I & C	14700	212	0	90	O-ring	B
X-143C	I & C	14700	124	0	90	O-ring	B
X-143D	I & C	14700	300	0	90	O-ring	B
X-144A	I & C	12650	45	0	90	O-ring	B
X-144B	I & C	12650	212	0	90	O-ring	B
X-144C	I & C	12650	124	0	90	O-ring	B
X-144D	I & C	12650	300	0	90	O-ring	B
X-146A	I & C	19000	38	0	300	O-ring	B
X-146B	I & C	19000	248	0	300	O-ring	B
X-146C	I & C	19000	112	0	300	O-ring	B
X-146D	I & C	19000	296.5	0	300	O-ring	B
X-147	I & C	20100	248	0	100	O-ring	B
X-160	LDS Monitor (Drywell Sample)	20100	42	0	250	O-ring	B
X-161A	CAMS I & C	14700	45	-1000	250	O-ring	B
X-161B	CAMS I & C	14700	290	0	250	O-ring	B
X-162A	CAMS I & C	19000	116	0	250	O-ring	B
X-162B	CAMS I & C	19000	244	0	250	O-ring	B
X-170	I & C	13400	310	0	200	O-ring	B
X-171	I & C	14700	55	1000	300	O-ring	B
X-177	I & C	15900	135	-500	250	O-ring	B

* This table provided in response to Questions 430.49d & e.
† All penetrations will be subject to the Type A test. Those penetrations subject to Type B testing are also tested in the Type A test.
‡ All penetrations excluded from Type B testing are welded penetrations and do not include resilient seals in their design.

Table 6.2-9 Primary Containment Penetration List* (Continued)

Penetration Number	Name	Elevation (mm)	Azimuth (deg)	Offset (mm)	Diameter (mm)	Barrier Type	Testing†‡
X-200B	Wetwell Spray	8900	258	0	100		A
X-200C	Wetwell Spray	8900	102	0	100		A
X-201	RHR Pump Suction (A)	-7085	36	0	450		A
X-202	RHR Pump Suction (B)	-7085	216	0	450		A
X-203	RHR Pump Suction (C)	-7085	144	0	450		A
X-204	RHR Pump Test (A)	1200	86	0	250		A
X-205	RHR Pump Test (B)	1200	266	0	250		A
X-206	RHR Pump Test (C)	1200	94	0	250		A
X-210	HPCF Pump Suction (B)	-7085	252	0	400		A
X-211	HPCF Pump Suction (C)	-7085	108	0	400		A
X-213	RCIC Turbine Exhaust	5800	60	0	550		A
X-214	RCIC Pump Suction	-7050	72	0	200		A
X-215	RCIC Vacuum Pump	2000	70	0	250		A
X-216	SPCU Pump Suction	-7450	283	0	200		A
X-217	SPCU Return	1700	340	0	250		A
X-220	MSIV Leak-off	9200	45	-2000	250		B
X-240	Wetwell Purge Suction	9200	45	1200	550		A
X-241	Wetwell Purge Exhaust	9200	230	0	550		A

* This table provided in response to Questions 430.49d & e.
† All penetrations will be subject to the Type A test. Those penetrations subject to Type B testing are also tested in the Type A test.
‡ All penetrations excluded from Type B testing are welded penetrations and do not include resilient seals in their design.

Table 6.2-9 Primary Containment Penetration List* (Continued)

Penetration Number	Name	Elevation (mm)	Azimuth (deg)	Offset (mm)	Diameter (mm)	Barrier Type	Testing†‡
X-242	FCS Return	1500	225	-1000	150		A
X-250	Spare	8500	45	0	400		A
X-251	Spare	9000	213	0	400		A
X-252	FCS Return	1500	50	0	300		B
X-253	Spare	2650	135	1000	300		B
X-254	Spare	2650	225	-1000	300		B
X-255	Spare	1200	282	0	300		B
X-300A	I & C	7300	134	0	300	O-ring	B
X-300B	I & C	7300	211	0	300	O-ring	B
X-320	I & C	8900	74	0	90	O-ring	B
X-321A	I & C	2050	97.5	0	300	O-ring	B
X-321B	I & C	6000	262.5	0	300	O-ring	B
X-322A	I & C	400	78	0	90	O-ring	B
X-322B	I & C	400	258	0	90	O-ring	B
X-322C	I & C	400	102	0	90	O-ring	B
X-322D	I & C	400	282	0	90	O-ring	B
X-322E	I & C	2000	94	0	90	O-ring	B
X-322F	I & C	2000	266	0	90	O-ring	B
X-323A	I & C	-5200	30	0	90	O-ring	B
X-323B	I & C	-5200	210	0	90	O-ring	B
X-323C	I & C	-5200	156	0	90	O-ring	B
X-323D	I & C	-5200	304	0	90	O-ring	B
X-323E	I & C	-7500	100	0	90	O-ring	B
X-323F	I & C	-7500	230	0	90	O-ring	B

* This table provided in response to Questions 430.49d & e.
† All penetrations will be subject to the Type A test. Those penetrations subject to Type B testing are also tested in the Type A test.
‡ All penetrations excluded from Type B testing are welded penetrations and do not include resilient seals in their design.

Table 6.2-9 Primary Containment Penetration List* (Continued)

Penetration Number	Name	Elevation (mm)	Azimuth (deg)	Offset (mm)	Diameter (mm)	Barrier Type	Testing†‡
X-331A	CAMS Gamma Det.	7300	30	0	250	O-ring	B
X-331B	CAMS Gamma Det.	7300	207	0	250	O-ring	B
X-332A	CAMS Sampling Ret.	8900	94	0	300	O-ring	B
X-332B	CAMS Sampling Ret.	8900	266	0	300	O-ring	B
X-342	I & C	9500	266	0	90	O-ring	B
X-600A	TIP Drive	1580	0	-450	50		A
X-600B	TIP Drive	1580	0	0	50		A
X-600C	TIP Drive	1580	0	450	50		A
X-600D	TIP Drive Purge	1580	0	730	50		A
X-700A	RIP Purge Water Supply	-590	180	-1780	35		A
X-700B	RIP Purge Water Supply	-590	180	-1640	35		A
X-700C	RIP Purge Water Supply	-590	180	-1500	35		A
X-700D	RIP Purge Water Supply	-760	180	-1780	35		A
X-700E	RIP Purge Water Supply	-760	180	-1640	35		A
X-700F	RIP Purge Water Supply	-760	180	-1500	35		A
X-700G	RIP Purge Water Supply	-930	180	-1780	35		A

* This table provided in response to Questions 430.49d & e.
† All penetrations will be subject to the Type A test. Those penetrations subject to Type B testing are also tested in the Type A test.
‡ All penetrations excluded from Type B testing are welded penetrations and do not include resilient seals in their design.

Table 6.2-9 Primary Containment Penetration List* (Continued)

Penetration Number	Name	Elevation (mm)	Azimuth (deg)	Offset (mm)	Diameter (mm)	Barrier Type	Testing†‡
X-700H	RIP Purge Water Supply	-930	180	-1640	35		A
X-700J	RIP Purge Water Supply	-1100	180	-1780	35		A
X-700K	RIP Purge Water Supply	-1100	180	-1640	35		A
X-710	CRD Insertion (Total 103)	1210	180	`1780	60		A
X-740	Spare	250	180	1840	100		A
X-750A	I&C (Core Diff Press.)	-250	180	-1780	40	O-ring	B
X-750B	I&C (Core Diff Press.)	-250	180	1640	40	O-ring	B
X-750C	I&C (Core Diff Press)	-250	180	1640	40	O-ring	B
X-750D	I&C (Core Diff Press)	-250	180	1780	40	O-ring	B
X-751A	I&C (RIP Diff Press.)	-420	180	-1780	40	O-ring	B
X-751B	I&C (RIP Diff Press.)	-420	180	1640	40	O-ring	B
X-751C	I&C (RIP Diff Press.)	-420	180	1640	40	O-ring	B
X-751D	I&C (RIP Diff Press.)	-420	180	1780	40	O-ring	B
X-780A	Spare	-250	180	-1500	40		B
X-780B	Spare	-590	180	1640	40		B
X-610	CRD Insertion (Total 102)	1210	0	1780	60		A
X-620	Low Conductivity Drain	-590	0	-1920	75		A
X-621	High Conductivity Drain	-250	0	-1920	150		A

* This table provided in response to Questions 430.49d & e.
† All penetrations will be subject to the Type A test. Those penetrations subject to Type B testing are also tested in the Type A test.
‡ All penetrations excluded from Type B testing are welded penetrations and do not include resilient seals in their design.

Table 6.2-9 Primary Containment Penetration List* (Continued)

Penetration Number	Name	Elevation (mm)	Azimuth (deg)	Offset (mm)	Diameter (mm)	Barrier Type	Testing†‡
X-650A	I&C (Core Diff Press.)	-250	0	1640	40	O-ring	B
X-650B	I&C (Core Diff Press.)	-250	0	-1710	40	O-ring	B
X-650C	I&C (Core Diff Press.)	-250	0	1780	40	O-ring	B
X-650D	I&C (Core Diff Press.)	-250	0	-1570	40	O-ring	B
X-651A	I&C (RIP Diff Press.)	-420	0	1640	40	O-ring	B
X-651B	I&C (RIP Diff Press.)	-420	0	-1710	40	O-ring	B
X-651C	I&C (RIP Diff Press.)	-420	0	1780	40	O-ring	B
X-651D	I&C (RIP Diff Press.)	-420	0	-1570	40	O-ring	B
X-680A	Spare	-250	0	1500	40		B
X-680B	Spare	-250	0	-1430	40		B

* This table provided in response to Questions 430.49d & e.
† All penetrations will be subject to the Type A test. Those penetrations subject to Type B testing are also tested in the Type A test.
‡ All penetrations excluded from Type B testing are welded penetrations and do not include resilient seals in their design.

Table 6.2-9Secondary Containment Penetration List*

Penetration Number	Name	Elevation (mm)	Diameter (mm)
1	RCW (B)	-8200	600
2	RCW (B)	-8200	600
3	HPCF	-8200	600
4	SS	-8200	50
5	RD (LCW)	-8200	80
6	RD (SD)	-8200	65
7	RD (HCW)	-8200	150
8	TV	-8200	250
9	RCW (A)	-8200	600
10	RCW (A)	-8200	600
11	RCW (C)	-8200	550
12	RCW (C)	-8200	550
13	HPCF	-8200	600
14	MUWC	-8200	250
15	CRD	-8200	150
16	CRD	-8200	50
17	SPH	-8200	150
18	RCW (B)	-1700	150
19	RCW (B)	-1700	150
20	RCW (B)	-1700	200
21	RCW (B)	-1700	200
22	MS	-1700	80
23	SA	-1700	65
24	IA	-1700	50
25	FP	-1700	150
26	RCW (A)	-1700	150
27	RCW (A)	-1700	150
28	RCW (A)	-1700	200
29	RCW (A)	-1700	200
30	HSR	-1700	150
31	RCW (C)	-1700	100

Table 6.2-9Secondary Containment Penetration List* (Continued)

Penetration Number	Name	Elevation (mm)	Diameter (mm)
32	RCW (C)	-1700	100
33	RCW (C)	-1700	200
34	RCW (C)	-1700	200
35	HS	4800	150
36	MS	4800	80
37	LCW (FPC)	4800	150
38	LCW (CUW)	4800	150
39	RCIC	4800	50
40	MS (4)	16191	700
41	FDW (2)	13810	600
42	HVAC Exhaust	27200	†
43	HVAC Supply	31700	†
44	Controlled Access(2)	12300	‡
45	Equipment Lock	12300	‡
46	Railroad Car Door	12300	‡
47	HS	12300	150
48	Deleted		
49	Deleted		
50	HNCW	12300	200
51	HNCW	12300	200
52	MUWP	4800	150
53	AC	4800	50
54	AC	4800	250
55	Deleted		
56	Deleted		
57	Cabletrays	23500	
58	Cabletrays	12300	
59	Cabletrays	4800	

* This table is provided in response to Question 430.34.

† These HVAC openings have safety-related isolation valves with both local monitoring and remote (in control room) monitoring.

‡ These doors are monitored in the control room as per Subsection 13.6.3.4.

Table 6.2-10 Potential Bypass Leakage Paths*

Penetration Number	Name	Diameter (mm)	Termination Region †	Leakage Barriers‡	Potential Bypass Path
X-1	U/D Equipment Hatch	2600	S	C/M-J	No
X-2	U/D Personnel Hatch	2400	S	C/M-J	No
X-3	ISI Hatch	200	S	C/M-J	No
X-4	Wetwell Access Hatch	2000	S	C/M-J	No
X-5	L/D Personnel Hatch	2400/5000	S	C/M-J	No
X-6	L/D Equipment Hatch	2400/5000	S	C/M-J	No
X-10A	Main Steamline	1200	E	E/D/G	Yes
X-10B	Main Steamline	1200	E	E/D/G	Yes
X-10C	Main Steamline	1200	E	E/D/G	Yes
X-10D	Main Steamline	1200	E	E/D/G	Yes
X-11	Main Steamline Drain	500	E	E/D/G	Yes
X-12A	Feedwater Line	950	E	E/D/L	Yes
X-12B	Feedwater Line	950	E	E/D/L	Yes
X-22	Borated Water Injection	450	S	E/C/L	No
X-30B	Drywell Spray	200	S	E/C/L	No
X-30C	Drywell Spray	200	S	E/C/L	No
X-31A	HPCF (B)	600	S	E/C/L	No
X-31B	HPCF (C)	600	S	E/C/L	No
X-32B	LPFL (B) RHR (B)	650	S	E/C/L	No
X-32C	LPFL (C) RHR (C)	650	S	E/C/L	No
X-33A	RHR Suction (A)	750	S	C/L	No
X-33B	RHR Suction (B)	750	S	C/L	No
X-33C	RHR Suction (C)	750	S	C/L	No
X-37	RCIC Turbine Steam	550	S	C/G	No
X-38	RPV Head Spray	550	S	E/C/L	No
X-50	CUW Pump Feed	600	S	E/C/L	No
X-60	MUWP Suction	200	S	C/L	No
X-61	RCW Suction (A)	200	E	E/D/H	No
X-62	RCW Return (A)	200	E	E/D/H	No
X-63	RCW Suction (B)	200	E	E/D/H	No
X-64	RCW Return (B)	200	E	E/D/H	No

Table 6.2-10 Potential Bypass Leakage Paths* (Continued)

Penetration Number	Name	Diameter (mm)	Termination Region †	Leakage Barriers‡	Potential Bypass Path
X-65	HNCW Suction	350	E	E/D/H	No
X-66	HNCW Return	350	E	E/D/H	No
X-69	SA	90	E	E/D/H	No
X-70	IA	200	E	E/D/H	No
X-71A	ADS Accumulator (A)	200	S	C/K	No
X-71B	ADS Accumulator (B)	200	S	C/K	No
X-72	Relief Valve Accumulator	200	S	C/K	No
X-80	Drywell Purge Suction	550	E	E/C/J	Yes
X-81	Drywell Purge Exhaust	550	E	E/C/J	Yes
X-82	FCS Suction	150	S	E/C/H	No
X-90	Spare	400	P	B/A	No
X-91	Spare	400	P	B/A	No
X-92	Spare	400	P	B/A	No
X-93	Spare	400	P	B/A	No
X-100A	IP Power	450	S	C/J	No
X-100B	IP Power	450	S	C/J	No
X-100C	IP Power	450	S	C/J	No
X-100D	IP Power	450	S	C/J	No
X-100E	IP Power	450	S	C/J	No
X-101A	LP Power	300	S	C/J	No
X-101B	LP Power	300	S	C/J	No
X-101C	LP Power	300	S	C/J	No
X-101D	FMCRD Power	300	S	C/J	No
X-101E	FMCRD Power	300	S	C/J	No
X-101F	FMCRD Power	300	S	C/J	No
X-101G	FMCRD Power	300	S	C/J	No
X-102A	I & C	300	S	C/J	No
X-102B	I & C	300	S	C/J	No
X-102C	I & C	300	S	C/J	No
X-102D	I & C	300	S	C/J	No
X-102E	I & C	300	S	C/J	No

Table 6.2-10 Potential Bypass Leakage Paths* (Continued)

Penetration Number	Name	Diameter (mm)	Termination Region †	Leakage Barriers‡	Potential Bypass Path
X-102F	I & C	300	S	C/J	No
X-102G	I & C	300	S	C/J	No
X-102H	FMCRD Control	300	S	C/J	No
X-102J	FMCRD Control	300	S	C/J	No
X-103A	I & C	300	S	C/J	No
X-103B	I & C	300	S	C/J	No
X-103C	I & C	300	S	C/J	No
X-104A	FMCRD Pos. Indicator	300	S	C/J	No
X-104B	FMCRD Pos. Indicator	300	S	C/J	No
X-104C	FMCRD Pos. Indicator	300	S	C/J	No
X-104D	FMCRD Pos. Indicator	300	S	C/J	No
X-104E	FMCRD Pos. Indicator	300	S	C/J	No
X-104F	FMCRD Pos. Indicator	300	S	C/J	No
X-104G	FMCRD Pos. Indicator	300	S	C/J	No
X-104H	FMCRD Pos. Indicator	300	S	C/J	No
X-105A	Neutron Detection	300	S	C/J	No
X-105B	Neutron Detection	300	S	C/J	No
X-105C	Neutron Indicator	300	S	C/J	No
X-105D	Neutron Indicator	300	S	C/J	No
X-110	FCS Suction	100	S	E/C/H	No
X-111	Spare	300	P	B/A	No
X-112	Spare	300	P	B/A	No
X-113	Spare	300	P	B/A	No
X-130A	I & C	300	S	C/J	No
X-130B	I & C	300	S	C/J	No
X-130C	I & C	300	S	C/J	No
X-130D	I & C	300	S	C/J	No
X-140A	I & C	300	S	C/J	No
X-140B	I & C	300	S	C/J	No
X-141A	I & C	300	S	C/J	No
X-141B	I & C	300	S	C/J	No

Table 6.2-10 Potential Bypass Leakage Paths* (Continued)

Penetration Number	Name	Diameter (mm)	Termination Region †	Leakage Barriers‡	Potential Bypass Path
X-142A	I & C	90	S	C/J	No
X-142B	I & C	90	S	C/J	No
X-142C	I & C	90	S	C/J	No
X-142D	I & C	90	S	C/J	No
X-143A	I & C	90	S	C/J	No
X-143B	I & C	90	S	C/J	No
X-143C	I & C	90	S	C/J	No
X-143D	I & C	90	S	C/J	No
X-144A	I & C	90	S	C/J	No
X-144B	I & C	90	S	C/J	No
X-144C	I & C	90	S	C/J	No
X-144D	I & C	90	S	C/J	No
X-146A	I & C	300	S	C/J	No
X-146B	I&C	300	S	C/J	No
X-146C	I&C	300	S	C/J	No
X-146D	I&C	300	S	C/J	No
X-147	I&C	90	S	C/J	No
X-160	LDS Monitor (drywell sample line)	250	S	E/C/H	No
X-161A	CAMS I&C	250	S	C/J	No
X-161B	CAMS I&C	250	S	C/J	No
X-162A	CAMS I&C	250	S	C/J	No
X-162B	CAMS I&C	250	S	C/J	No
X-170	I&C	200	S	C/J	No
X-171	I&C	300	S	C/J	No
X-172	I&C	250	S	C/J	No
X-200A	Wetwell Spray	100	S	C/H	No
X-200B	Wetwell Spray	100	S	C/H	No

Table 6.2-10 Potential Bypass Leakage Paths* (Continued)

Penetration Number	Name	Diameter (mm)	Termination Region †	Leakage Barriers‡	Potential Bypass Path
X-201	RHR Pump Suction (A)	450	S	C/H	No
X-202	RHR Pump Suction (B)	450	S	C/H	No
X-203	RHR Pump Suction (C)	450	S	C/H	No
X-204	RHR Pump Test (A)	250	S	C/H	No
X-205	RHR Pump Test (B)	250	S	C/H	No
X-206	RHR Pump Test (C)	250	S	C/H	No
X-210	HPCF Pump Suction (B)	400	S	C/H	No
X-211	HPCF Pump Suction (C)	400	S	C/H	No
X-213	RCIC Turbine Exhaust	550	S	C/G	No
X-214	RCIC Pump Suction	200	S	C/H	No
X-215	RCIC Vacuum Pump Ex.	250	S	C/G	No
X-216	SPCU Pump Suction	200	S	C/H	No
X-217	SPCU Pump Return	250	S	C/H	No
X-220	MSIV Leakage	250	S	C/G	No
X-240	Wetwell Purge Suction	550	E	E/C/J	Yes
X-241	Wetwell Purge Exhaust	550	E	E/C/J	Yes
X-242	FCS Return	150	S	E/C/H	No
X-250	Spare		P	B/A	No
X-251	Spare		P	B/A	No
X-252	FCS Return	150	S	E/C/H	No
X-253	Spare	300	S	B/A	No
X-254	Spare	300	S	B/A	No
X-255	Spare	300	S	B/A	No
X-300A	I&C	300	S	C/J	No
X-300B	I&C	300	S	C/J	No
X-320	I&C	90	S	C/J	No
X-321B	I&C	300	S	C/J	No
X-322A	I&C	90	S	C/J	No
X-322B	I&C	90	S	C/J	No

Table 6.2-10 Potential Bypass Leakage Paths* (Continued)

Penetration Number	Name	Diameter (mm)	Termination Region †	Leakage Barriers‡	Potential Bypass Path
X-322C	I&C	90	S	C/J	No
X-322D	I&C	90	S	C/J	No
X-322E	I&C	90	S	C/J	No
X-322F	I&C	90	S	C/U	No
X-323A	I&C	90	S	C/J	No
X-323B	I&C	90	S	C/J	No
X-323C	I&C	90	S	C/J	No
X-323D	I&C	90	S	C/J	No
X-323E	I&C	90	S	C/J	No
X-323F	I&C	90	S	C/J	No
X-331A	CAMS Gamma Det.	250	S	C/J	No
X-331B	CAMS Gamma Det.	250	S	C/J	No
X-332A	CAMS Sampling Ret.	300	S	C/J	No
X-332B	CAMS Sampling Ret.	300	S	C/J	No
X-334	I&C	90	S	C/J	No
X-341	I&C	90	S	C/J	No
X-342	I&C	90	S	C/J	No
X-610	CRD Insertion (Total 102)	60	S	C/L	No
X-620	LCW Drain	75	S	C/J	No
X-621	HCW Drain	150	S	C/J	No
X-650A	I&C Core Diff Press.	40	S	C/J	No
X-650B	I&C Core Diff Press.	40	S	C/J	No
X-650C	I&C Core Diff Press.	40	S	C/J	No
X-650D	I&C Core Diff Press.	40	S	C/J	No
X-651A	I&C RIP Diff Press.	40	S	C/J	No
X-651B	I&C RIP Diff Press.	40	S	C/J	No
X-651C	I&C RIP Diff Press.	40	S	C/J	No
X-651D	I&C RIP Diff Press.	40	S	C/J	No
X-660A	TIP Drive	50	S	C/J	No
X-660B	TIP Drive	50	S	C/J	No

Table 6.2-10 Potential Bypass Leakage Paths* (Continued)

Penetration Number	Name	Diameter (mm)	Termination Region †	Leakage Barriers‡	Potential Bypass Path
X-660C	TIP Drive	50	S	C/J	No
X-660D	TIP Drive Purge	50	S	C/K	No
X-680A	Spare	40	S	C/J	No
X-680B	Spare	40	S	C/J	No
X-700A	RIP Purge Water Supply	35	S	C/H	No
X-700B	RIP Purge Water Supply	35	S	C/H	No
X-700C	RIP Purge Water Supply	35	S	C/H	No
X-700D	RIP Purge Water Supply	35	S	C/H	No
X-700E	RIP Purge Water Supply	35	S	C/H	No
X-700F	RIP Purge Water Supply	35	S	C/H	No
X-700G	RIP Purge Water Supply	35	S	C/H	No
X-700H	RIP Purge Water Supply	35	S	C/H	No
X-700J	RIP Purge Water Supply	35	S	C/H	No
X-700K	RIP Purge Water Supply	35	S	C/H	No
X-750A	I&C (Core Diff Press.)	180	S	C/J	No
X-750B	I&C (Core Diff Press.)	180	S	C/J	No
X-750C	I&C (Core Diff Press.)	180	S	C/J	No
X-750D	I&C (Core Diff Press.)	180	S	C/J	No
X-751A	I&C (RIP Diff Press.)	180	S	C/J	No
X-751B	I&C (RIP Diff Press)	180	S	C/J	No
X-751C	I&C (RIP Diff Press)	180	S	C/J	No
X-751D	I&C (RIP Diff Press)	180	S	C/J	No
X-780A	Spare	180	S	B/A	No
X-780B	Spare	180	S	B/A	No

* This table is provided in response to Question 430.52b.

† E - Environment
P - Primary containment
S - Secondary containment

‡ A) Penetration is capped
B) Terminates at Primary Containment wall
C) Terminates inside Secondary Containment
D) Terminates outside Secondary Containment
E) Redundant containment isolation valves
F) Water seal plus third stop check valve
G) Leakage handled and accounted for alternate leakage control system (condenser)
H) Closed loop
J) SGTS - Standby gas treatment system collects and treats
K) Continuous gas pressure
L) Continuous water pressure
M) Testable double seal

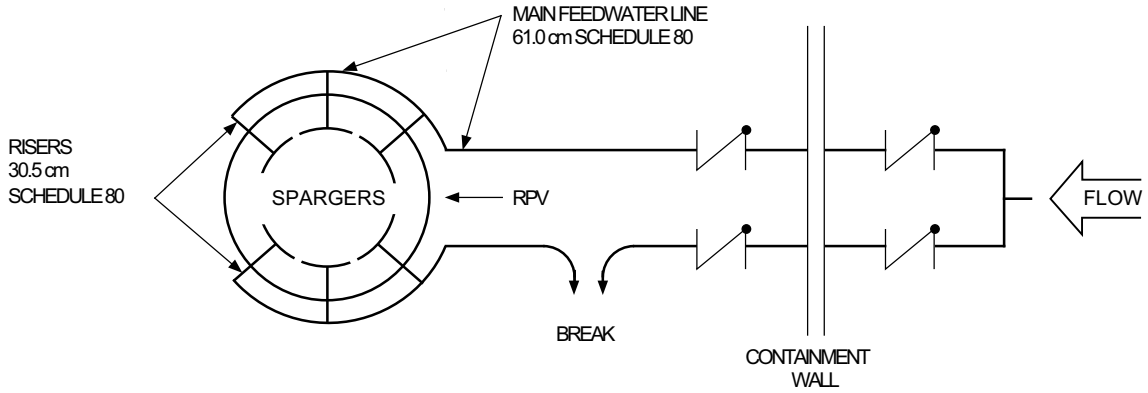

FLOW AREAS:	MAIN FEEDWATER LINE	= 0.24 m^2
	RPV NOZZLE	= 0.12 m^2
	RISERS	= 0.07 m^2
	SPARGER OPEN AREA	= 0.03 m^2

Figure 6.2-1 A Break in a Feedwater Line

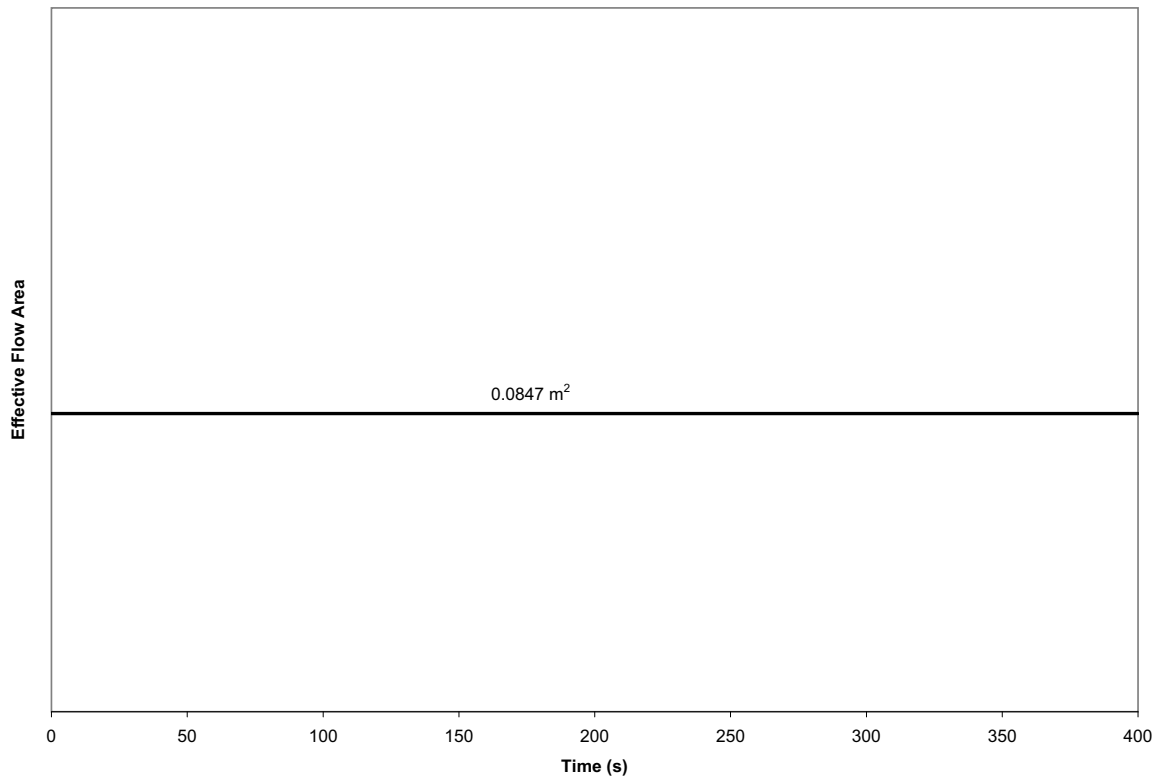

Figure 6.2-2 Feedwater Line Break—RPV Side Break Area

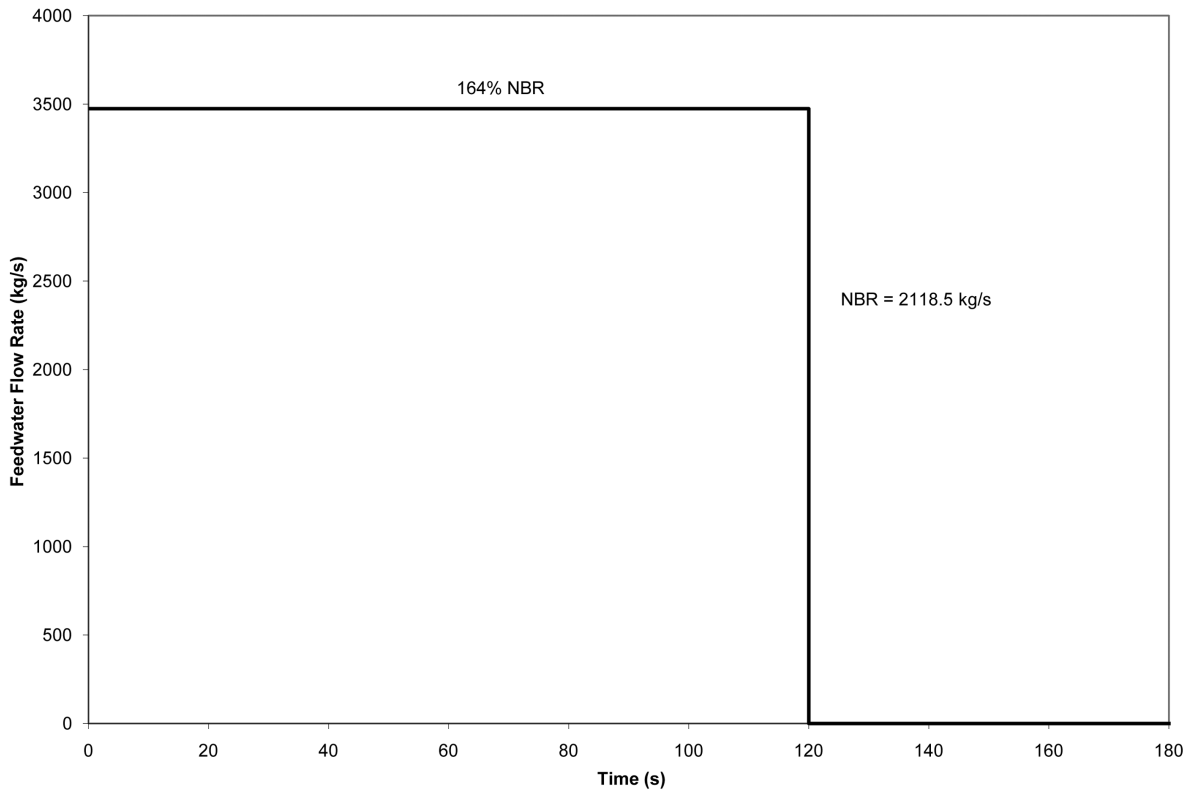

Figure 6.2-3 Feedwater Line Break Flow—Feedwater System Side of Break

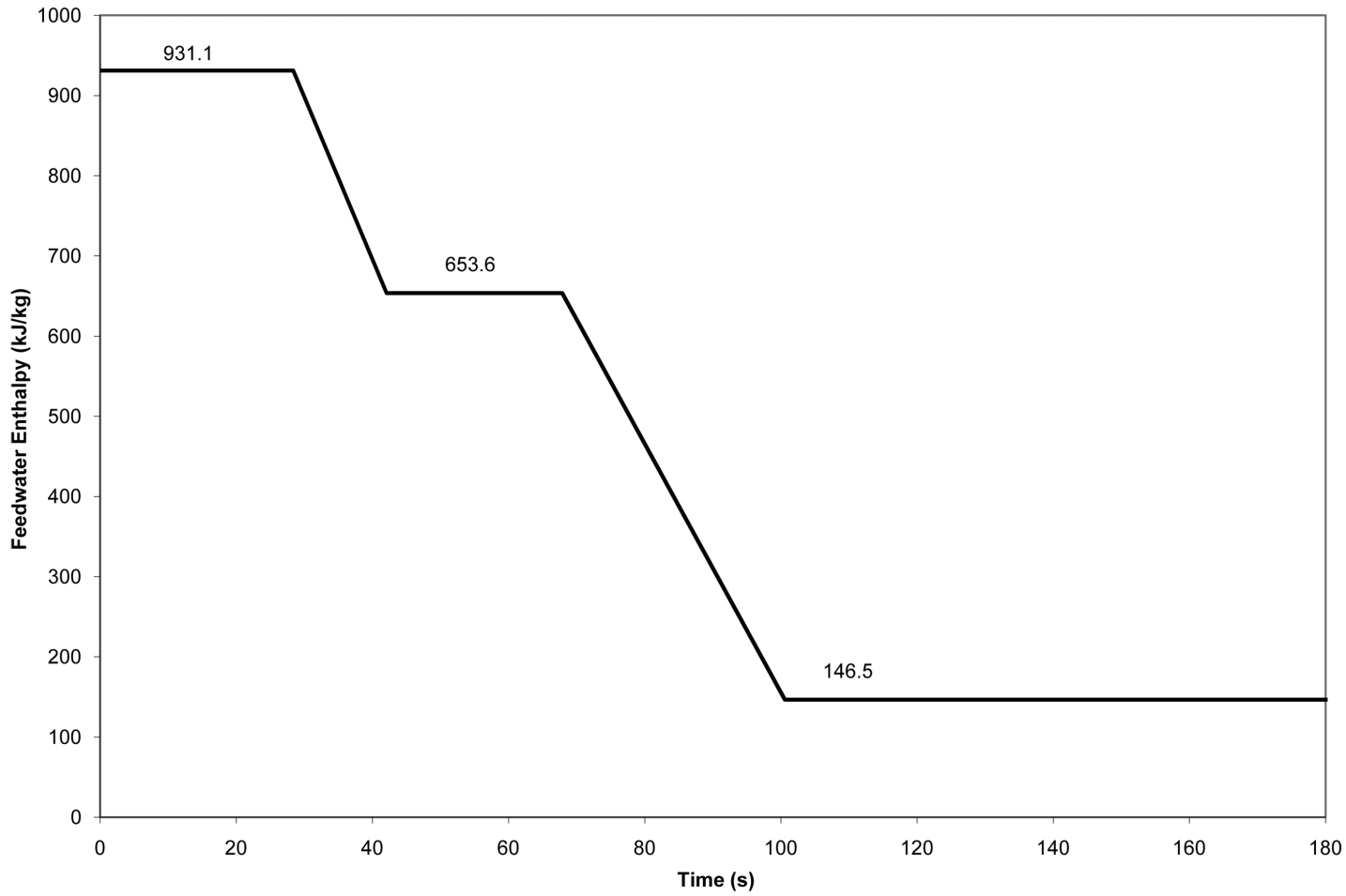

Figure 6.2-4 Feedwater Line Break Flow Enthalpy—Feedwater System Side of Break

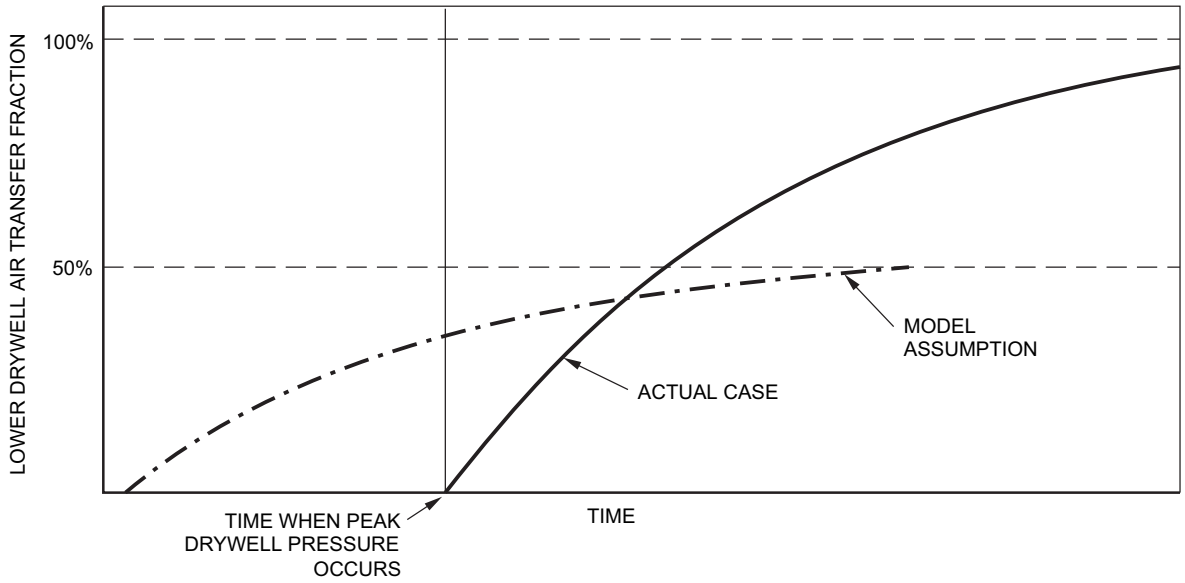

Figure 6.2-5 Lower Drywell Air Transfer Percentage for Model Assumption Versus Actual Case

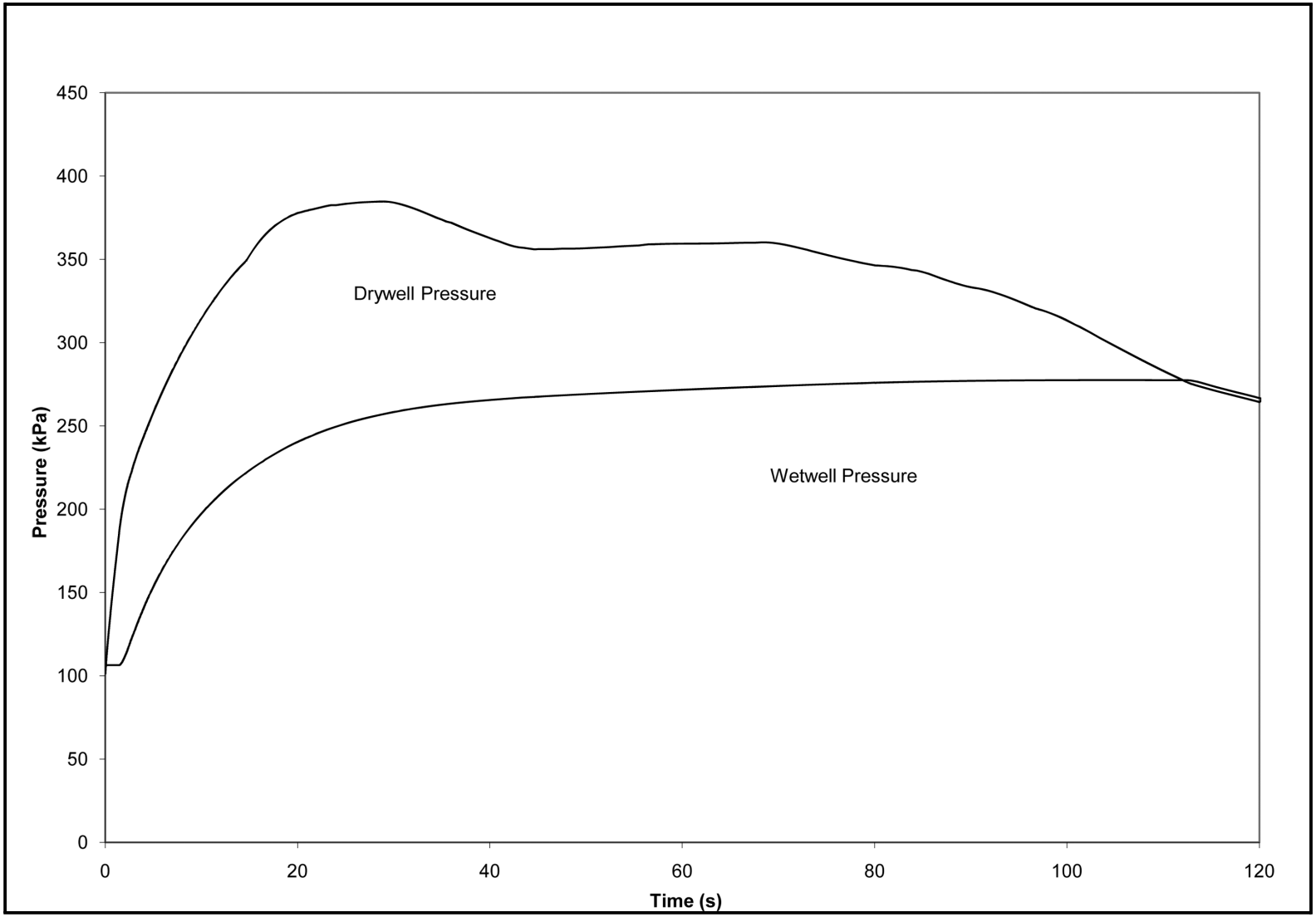

Figure 6.2-6 Pressure Response of the Primary Containment for Feedwater Line Break

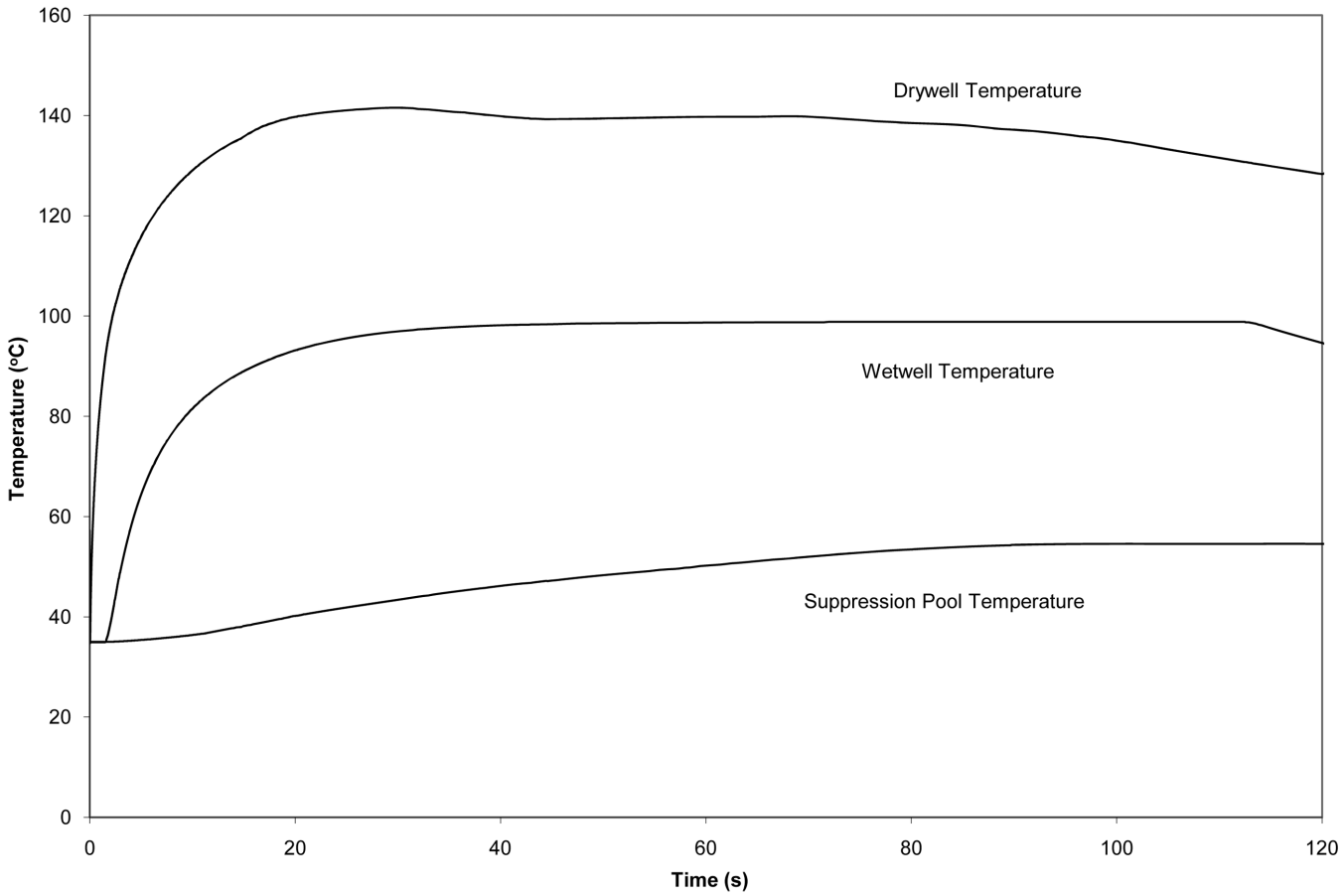

Figure 6.2-7 Temperature Response of the Primary Containment for Feedwater Line Break

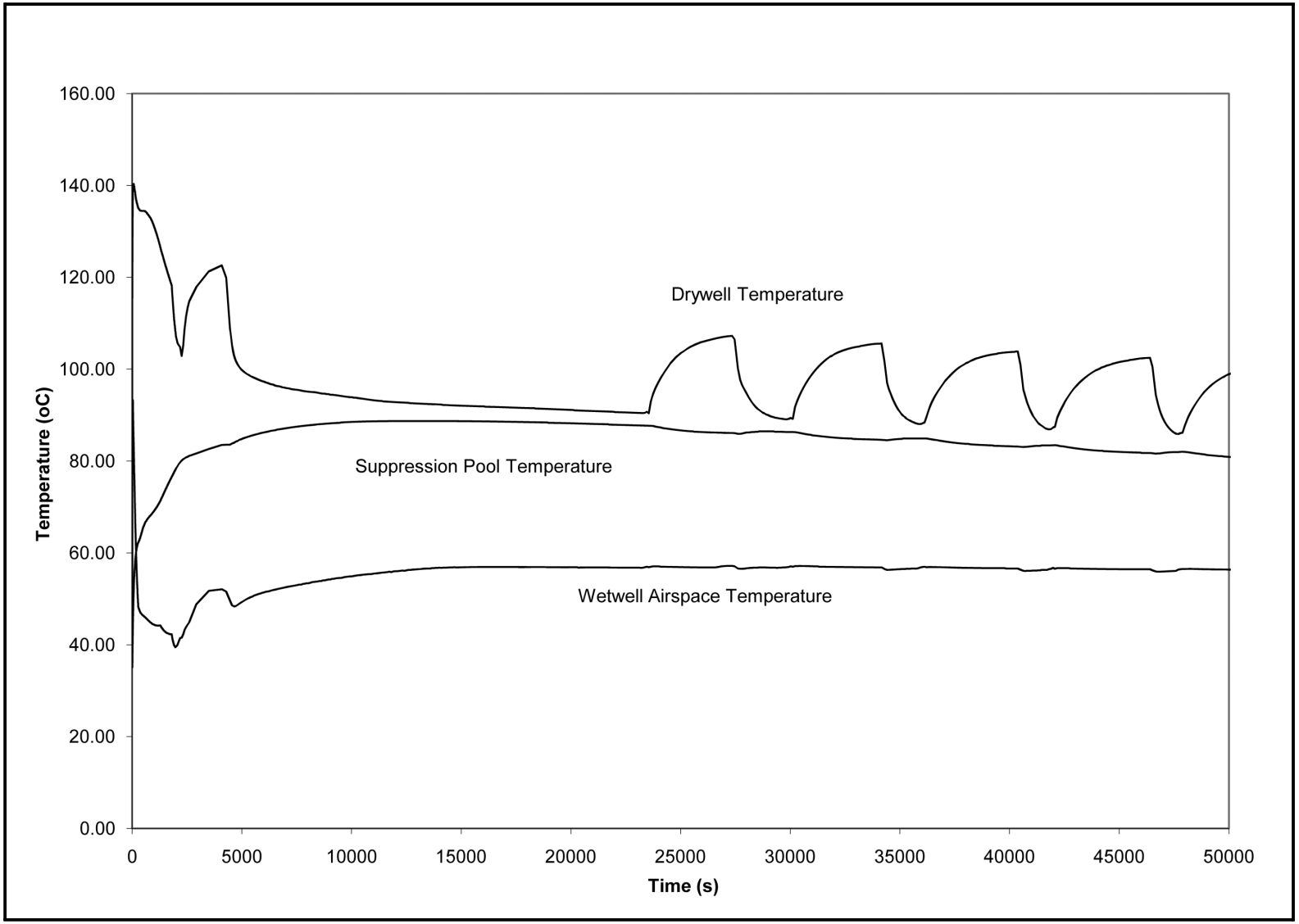

Figure 6.2-8 Temperature Time History After a Feedwater Line Break

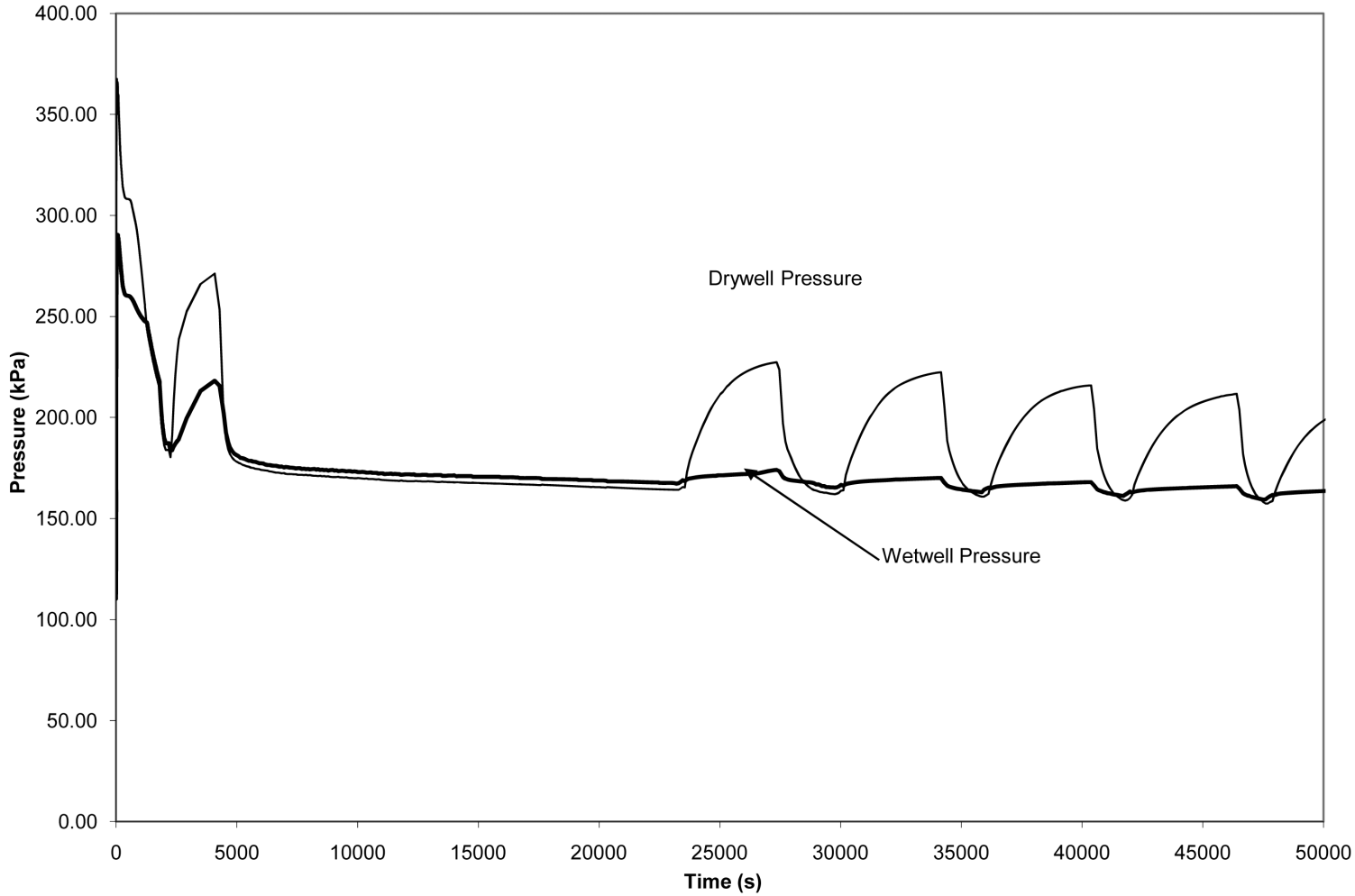

Figure 6.2-8a Pressure Time History After a Feedwater Line Break

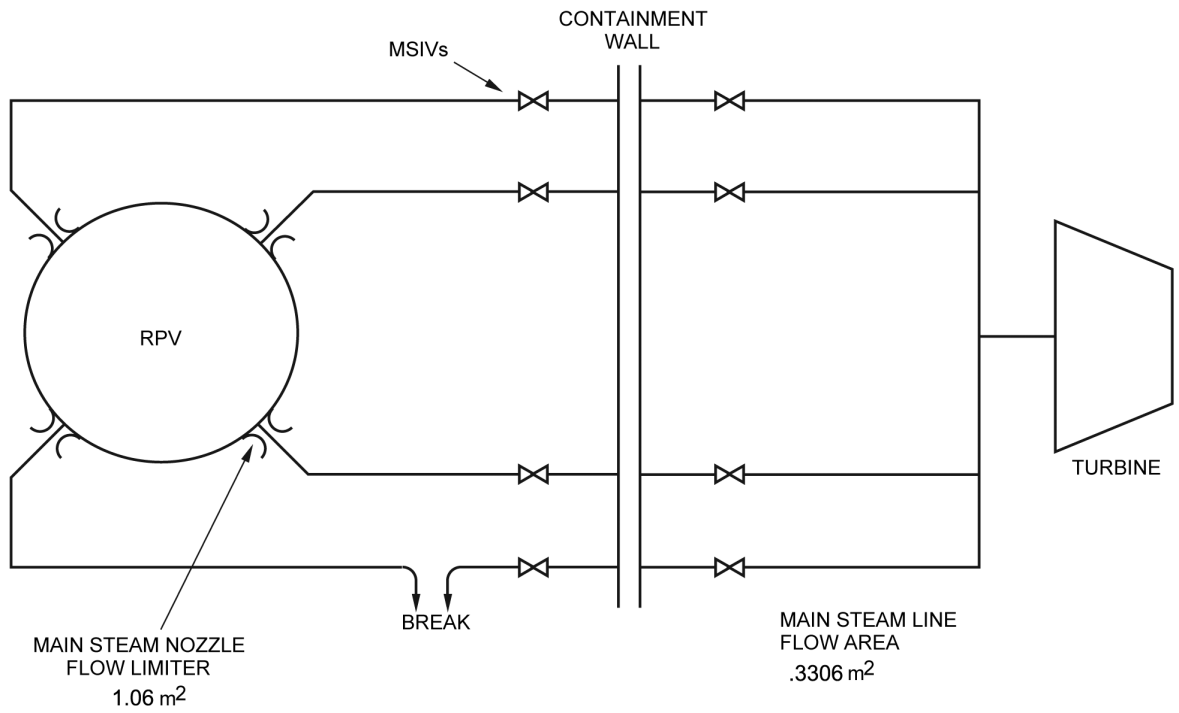

Figure 6.2-9 ABWR Main Steamlines with a Break

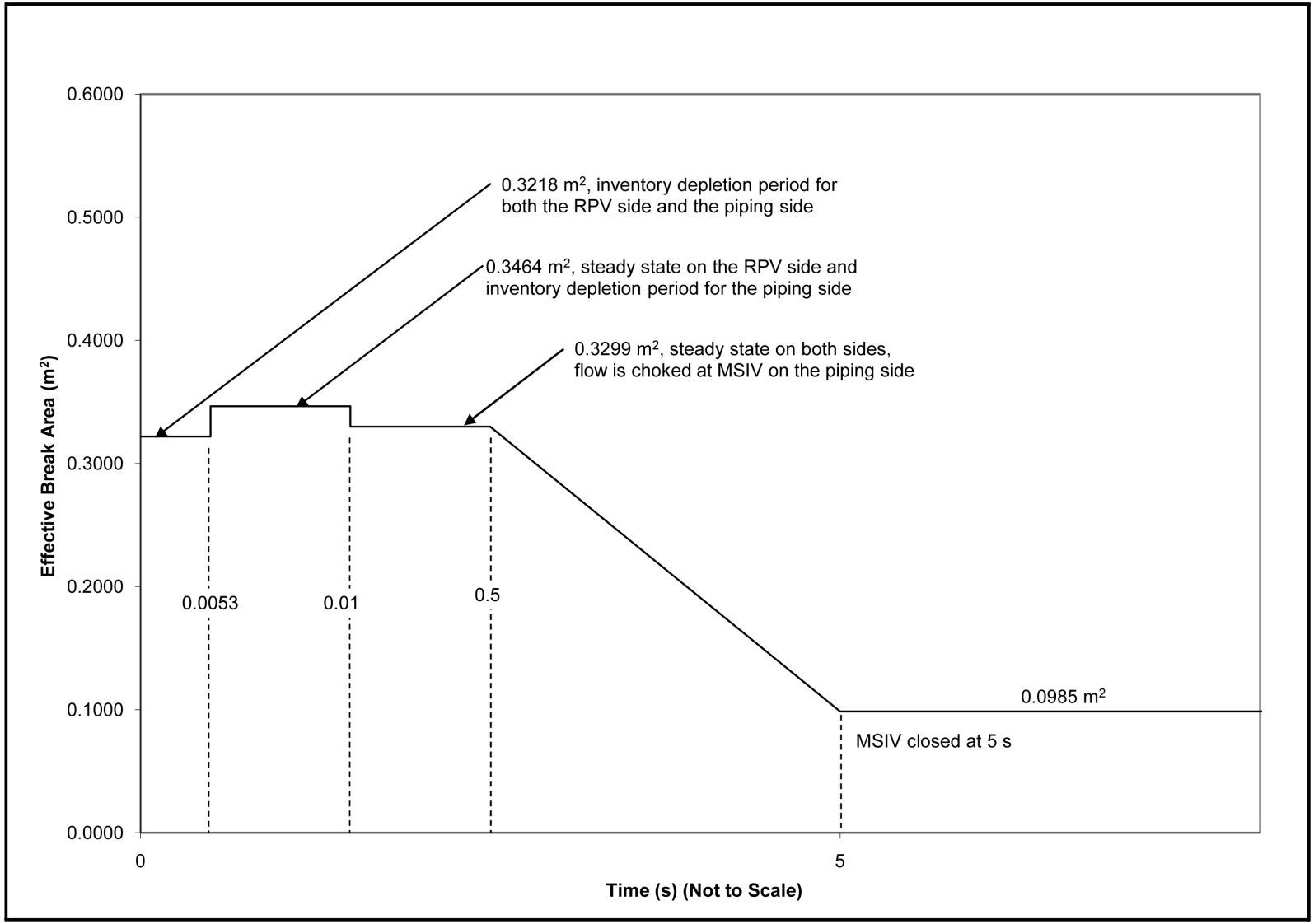

Figure 6.2-10 MSLB Area as a Function of Time

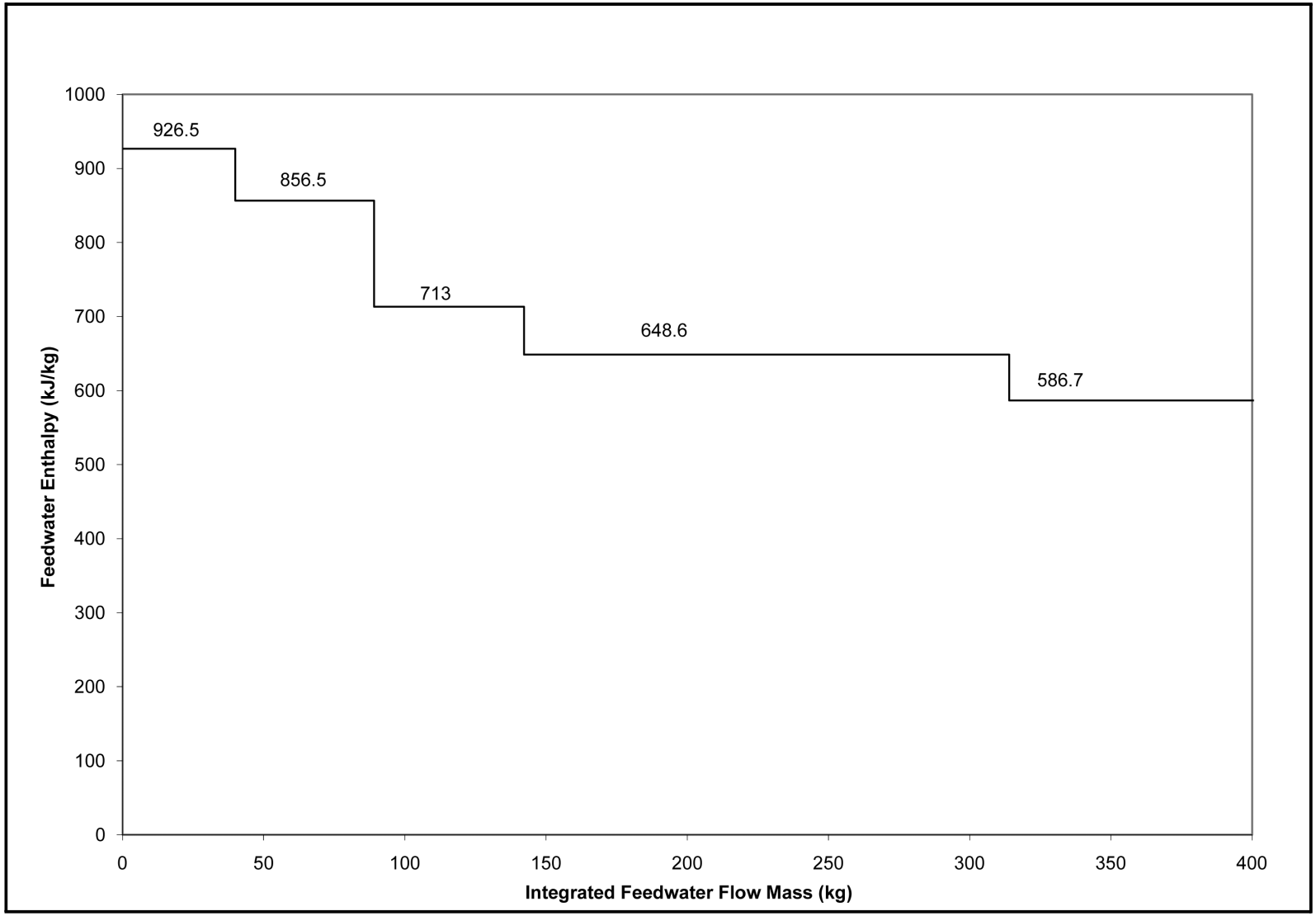

Figure 6.2-11 Feedwater Specific Enthalpy as a Function of Integrated Feedwater Flow Mass

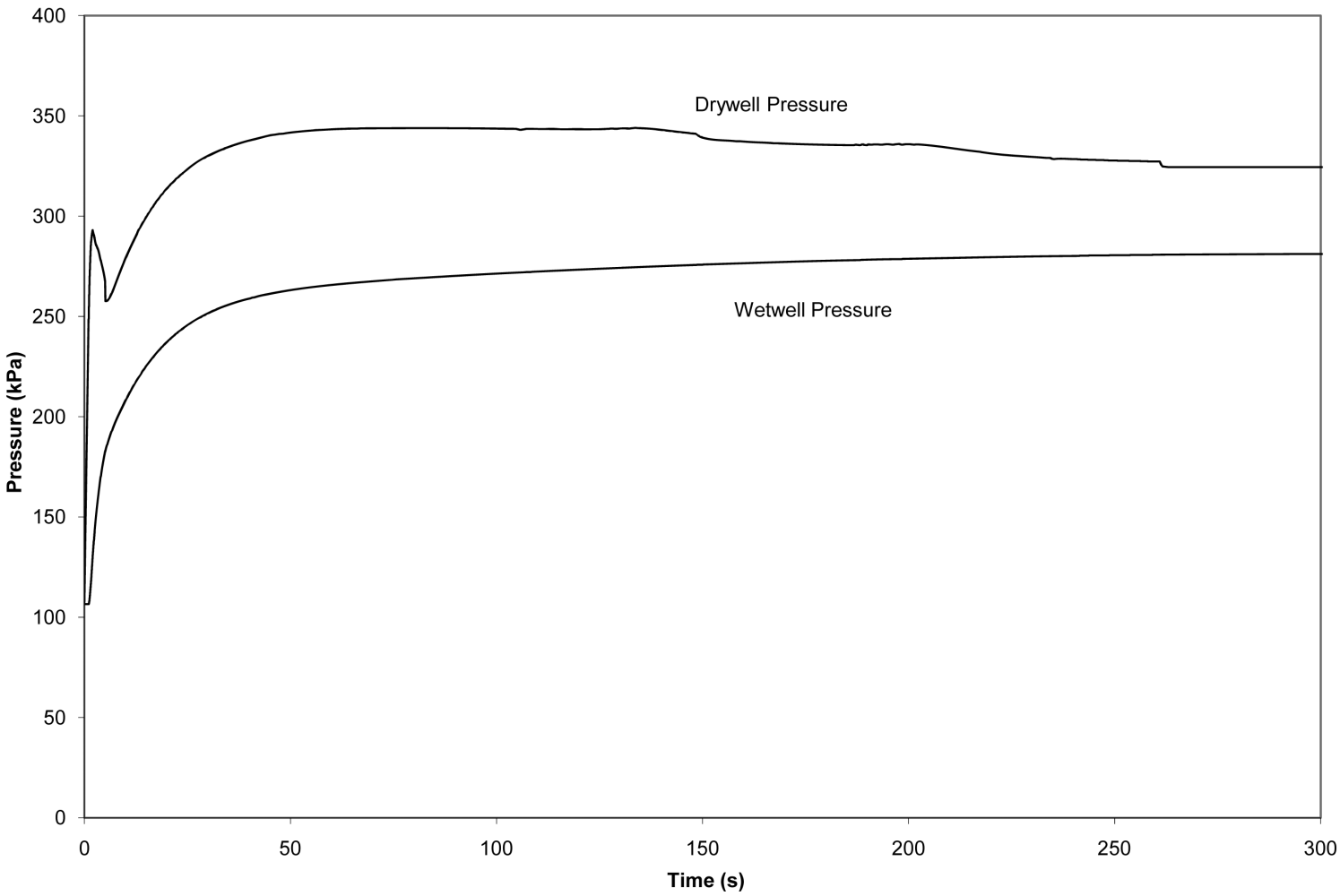

Figure 6.2-12 Pressure Time History for MSLB with Two-Phase Blowdown Starting at 2 Seconds.

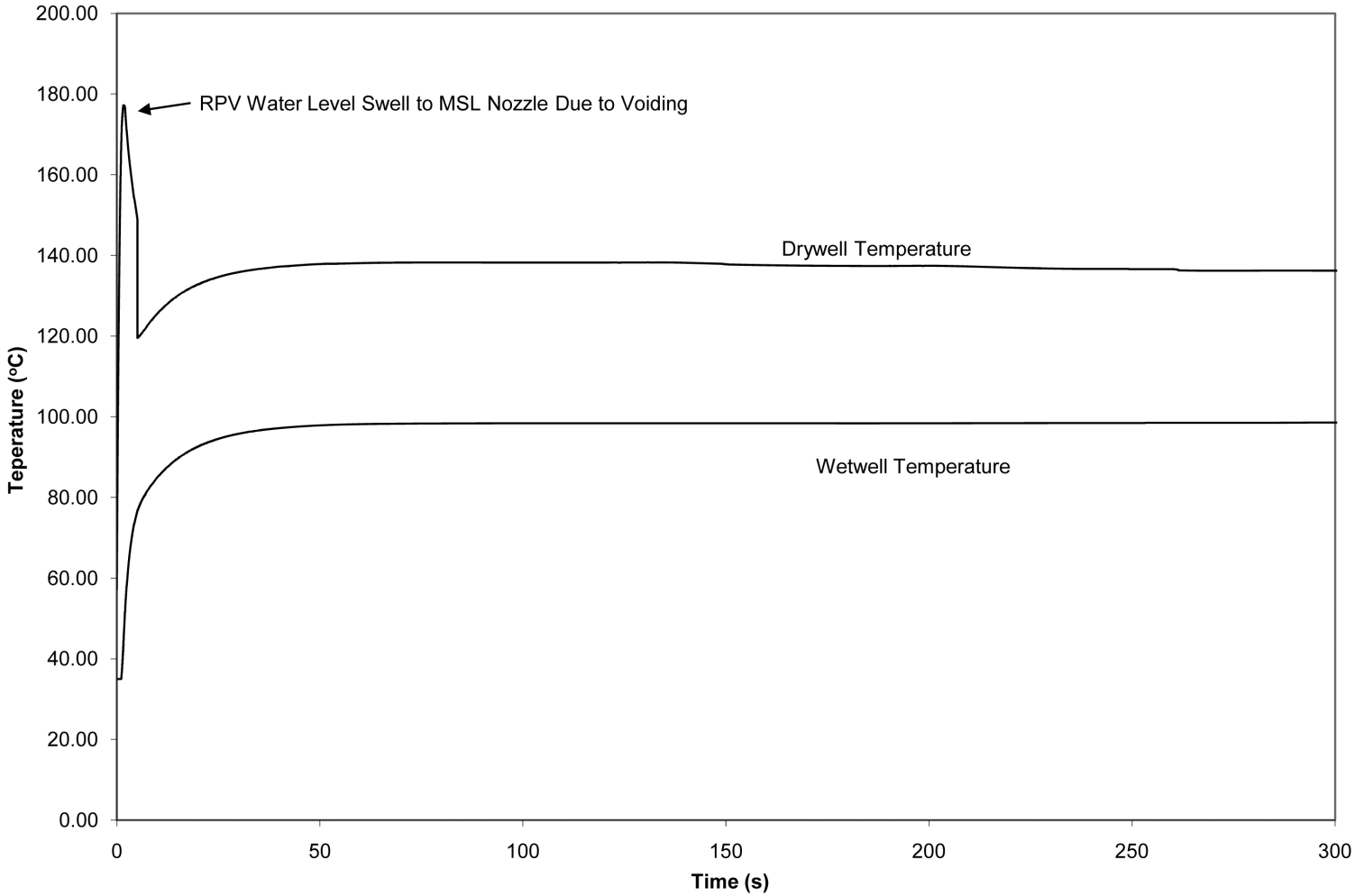

Figure 6.2-13 Temperature Time History for MSLB with Two-Phase Blowdown Starting at two Seconds.

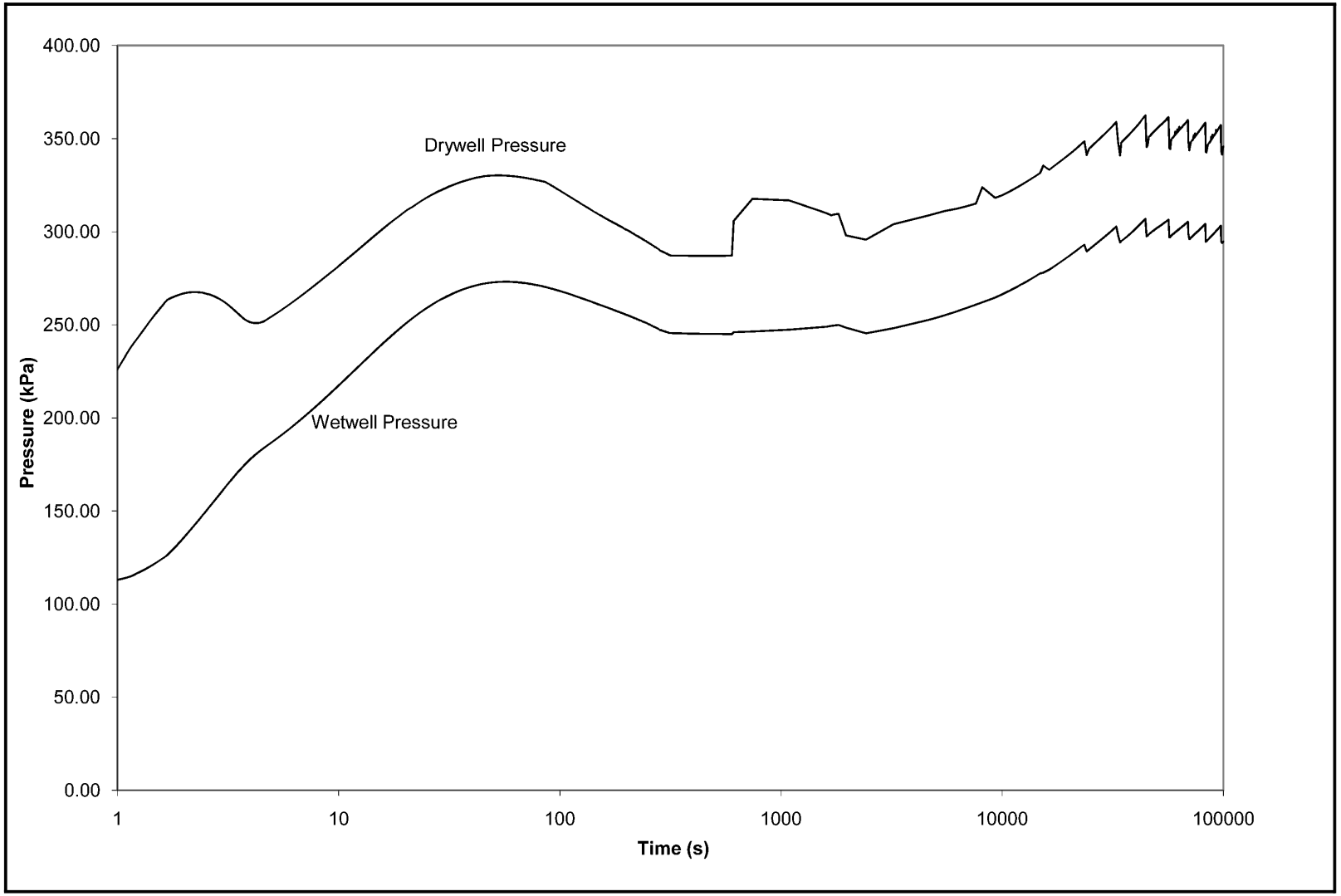

Figure 6.2-14 Pressure Time History for Long-term MSLB

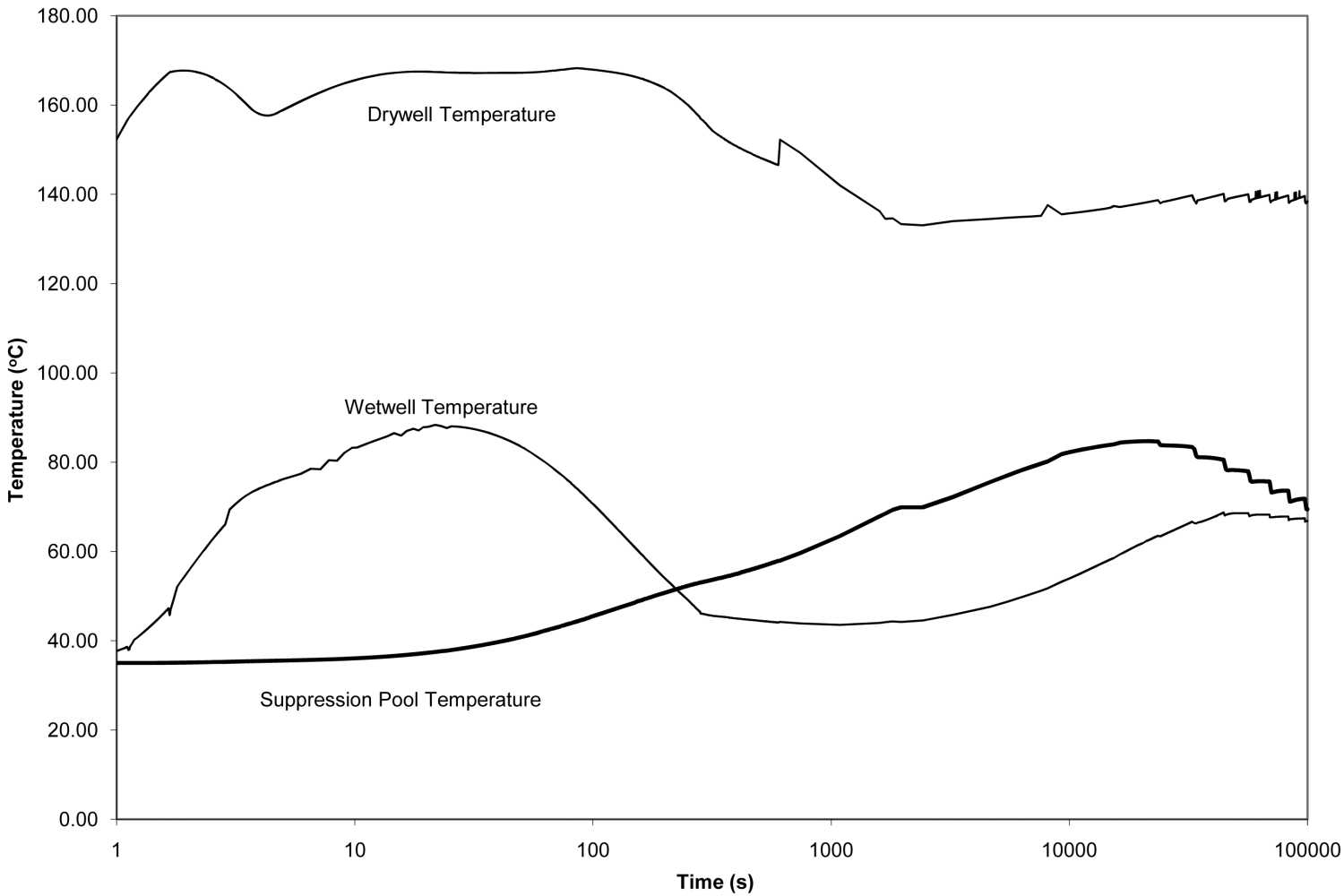

Figure 6.2-15 Temperature Time History for Long-term MSLB

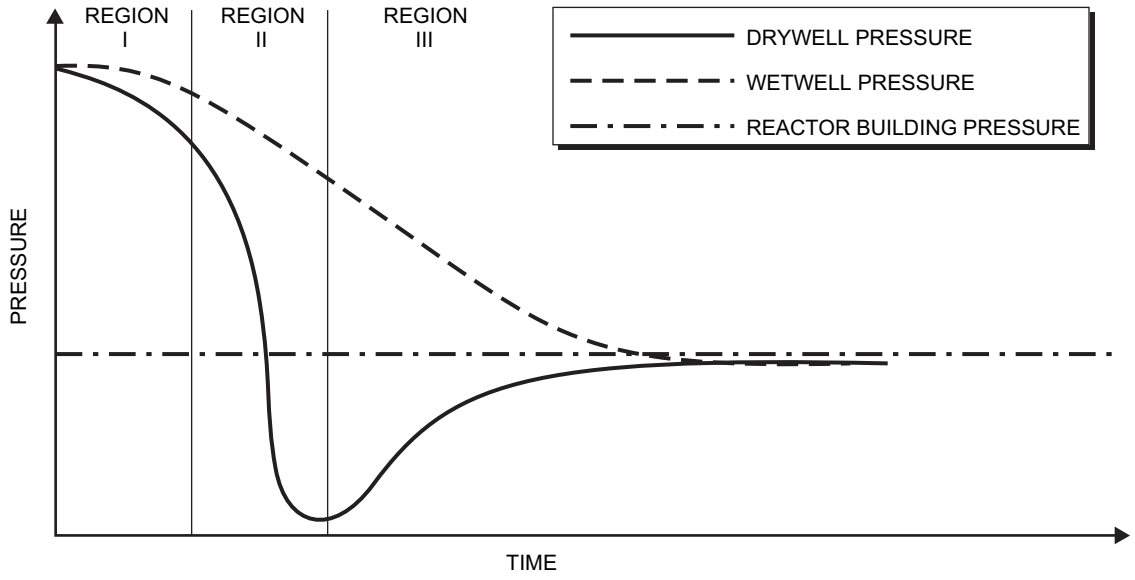

Figure 6.2-16 General Pressure Trends in the Containment During a Post-LOCA Depressurization Transient

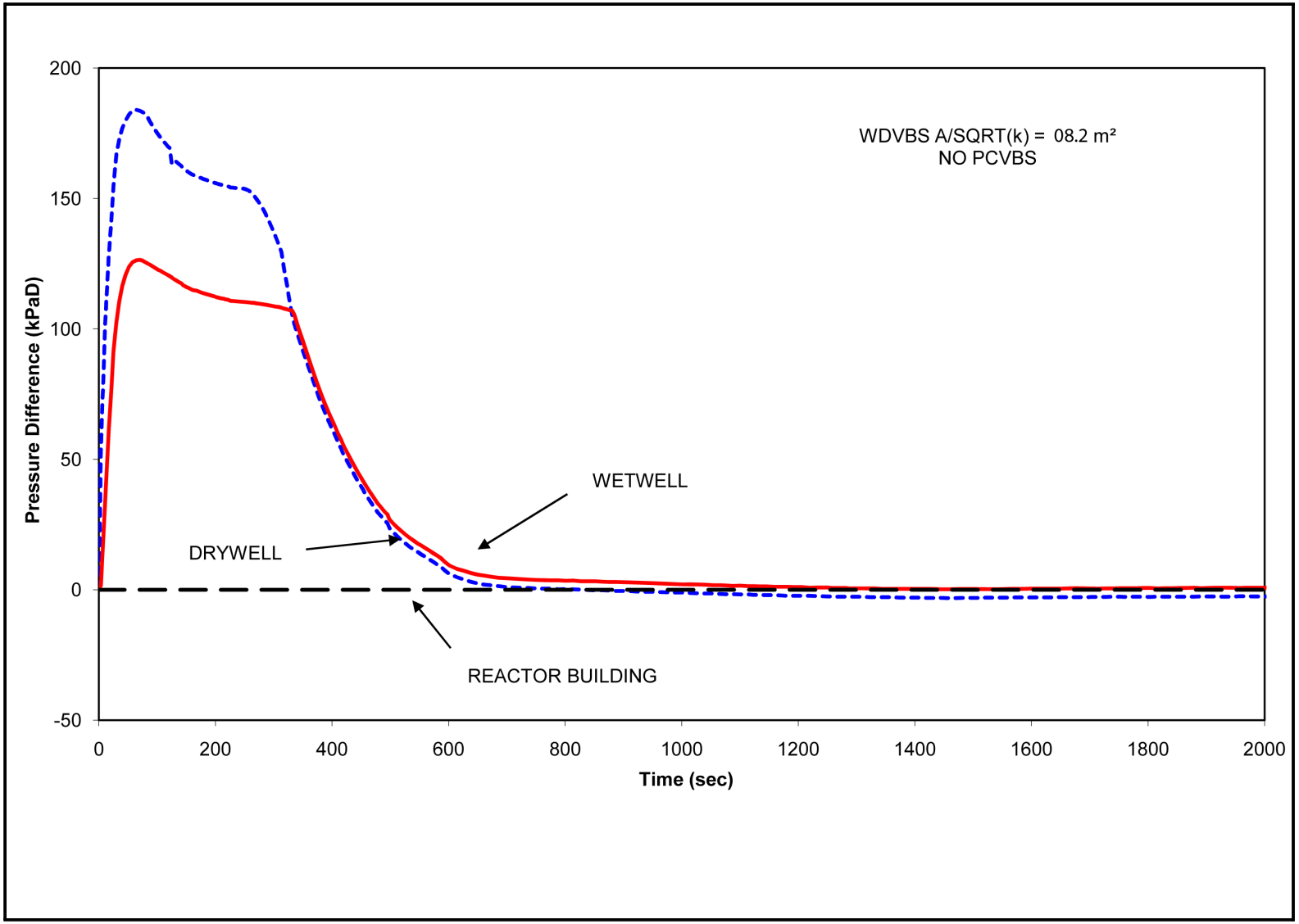

Figure 6.2-17 Differential Pressures in Wetwell and Drywell Relative to Reactor Building for Vacuum Breaker Size of .82 m^2

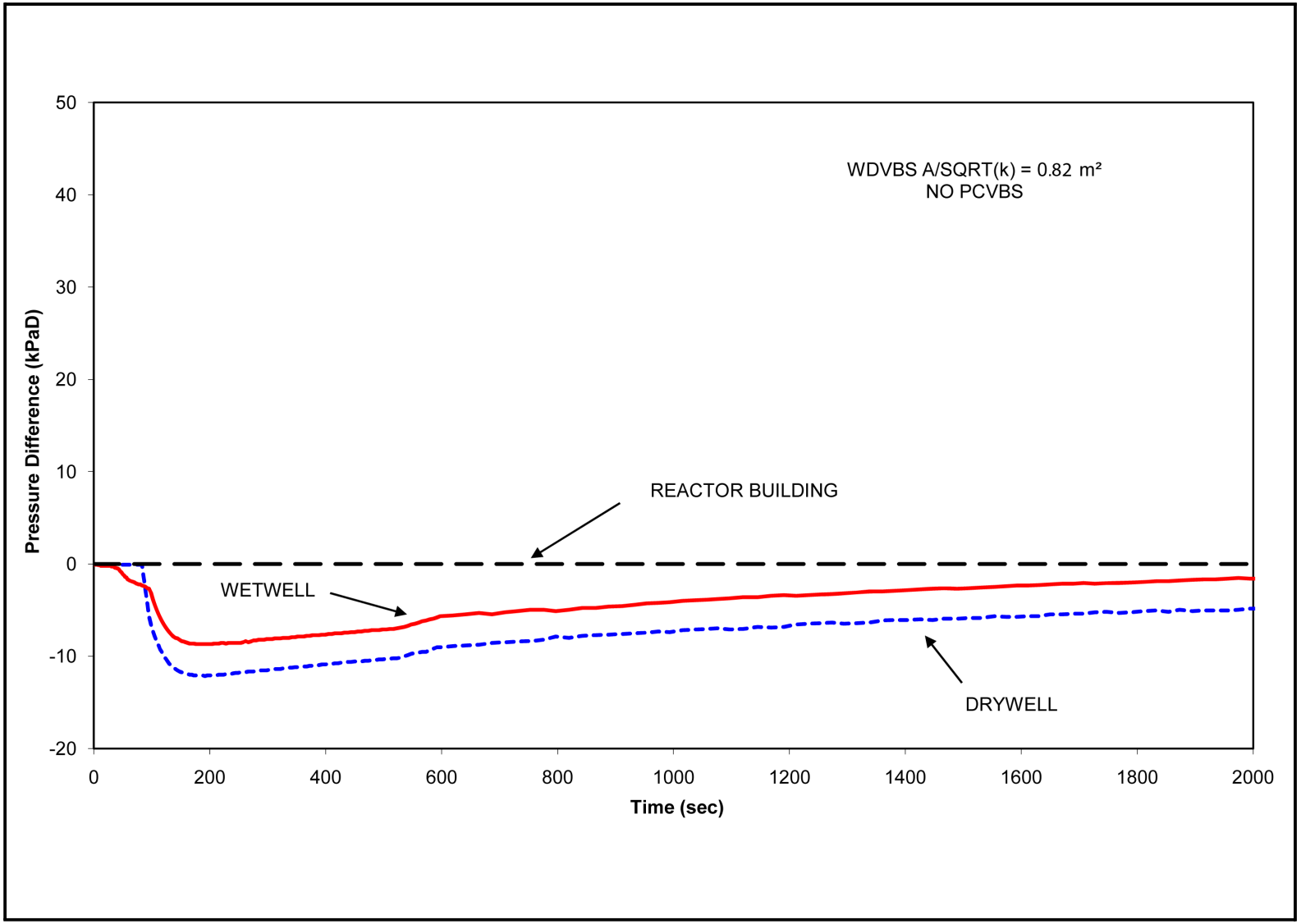

Figure 6.2-18 Differential Pressures in Wetwell and Drywell Relative to Reactor Building with Wetwell Spray for Vacuum Breaker Size of .82 m^2

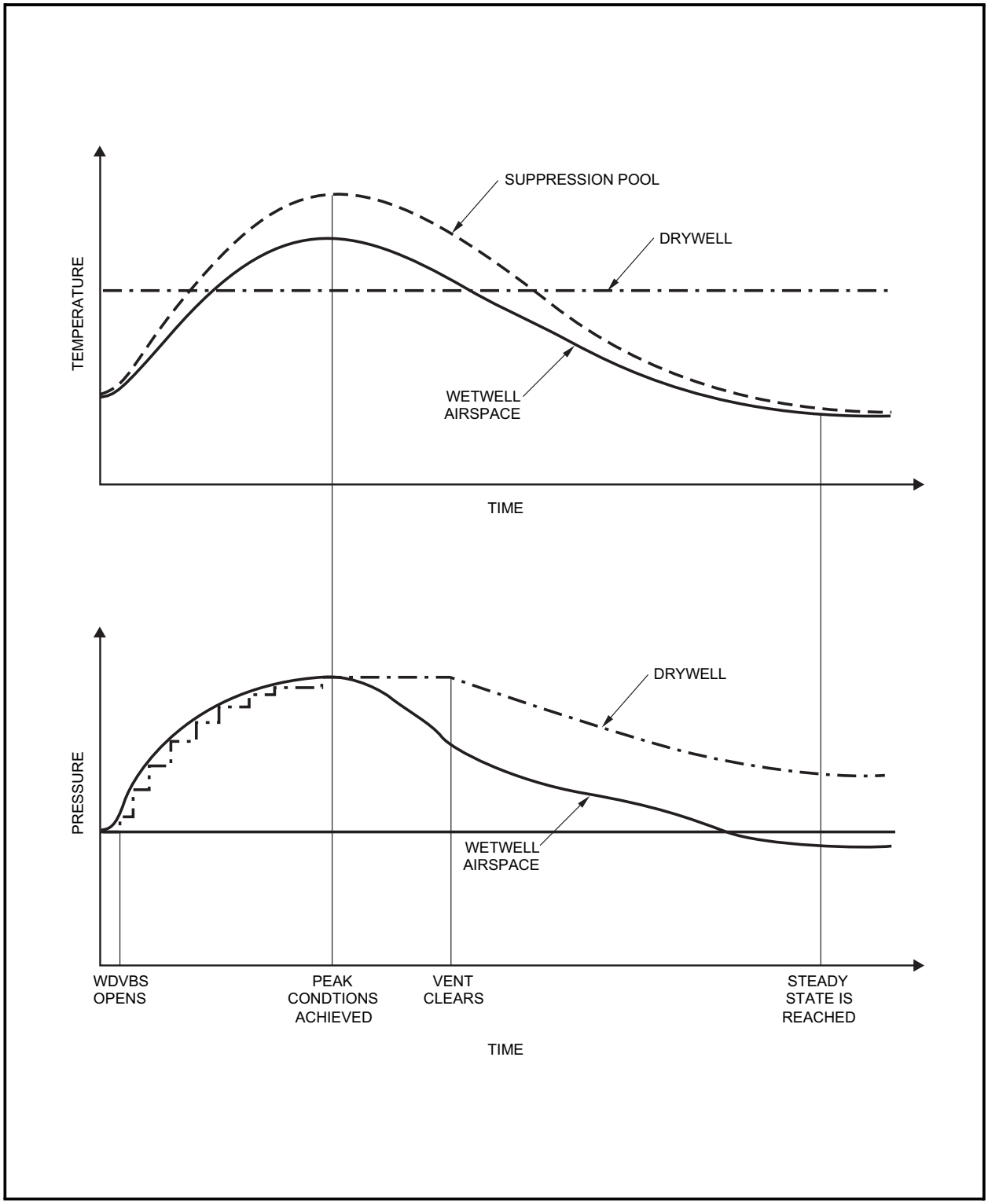

Figure 6.2-19 Temperature and Pressure Time Histories in the Containment During Stuck Open Relief Valve Transient

Figure 6.2-20 Not Used

Figure 6.2-21 Not Used

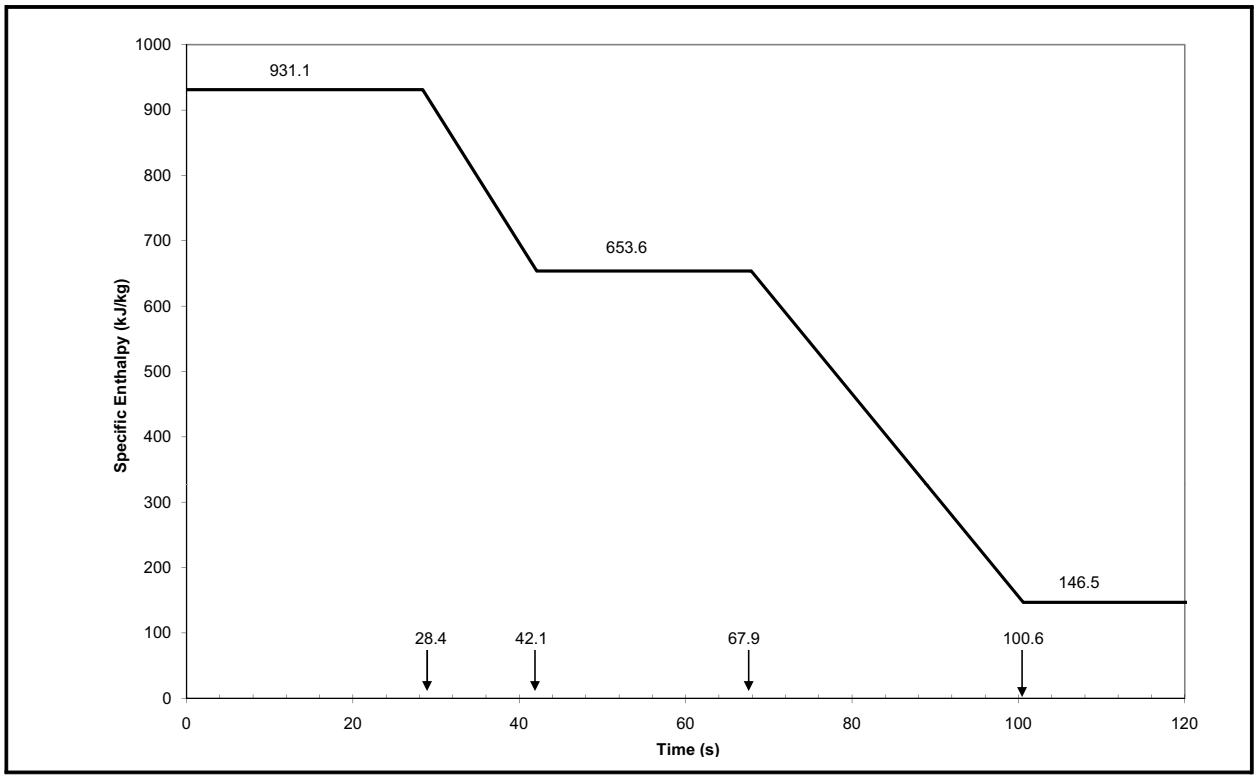

Figure 6.2-22 Break Flow Rate and Specific Enthalpy for the Feedwater Line Break Flow Coming from the Feedwater System Side

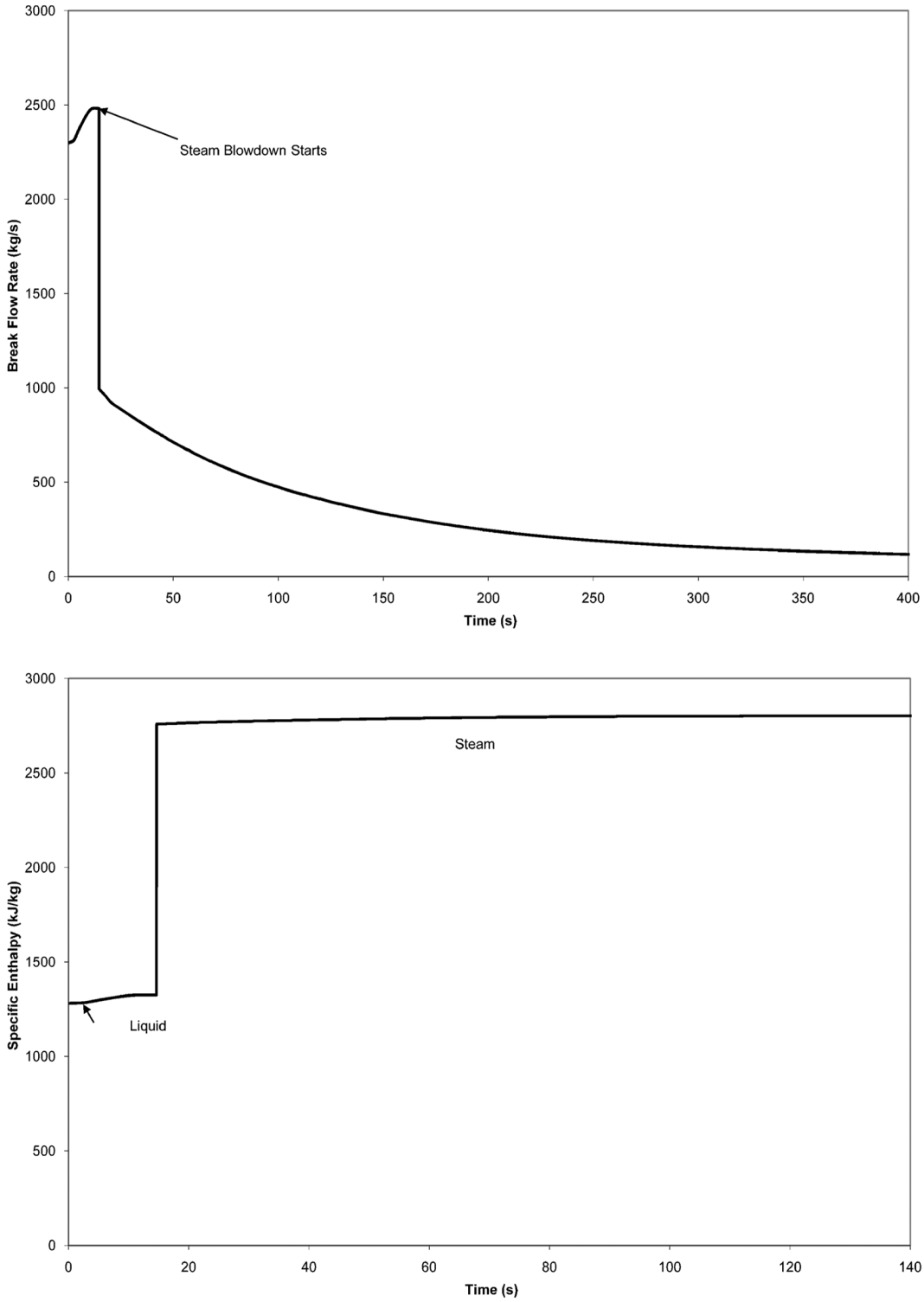

Figure 6.2-23 Break Flow Rate and Specific Enthalpy for the Feedwater Line Break Flow Coming from the RPV Side

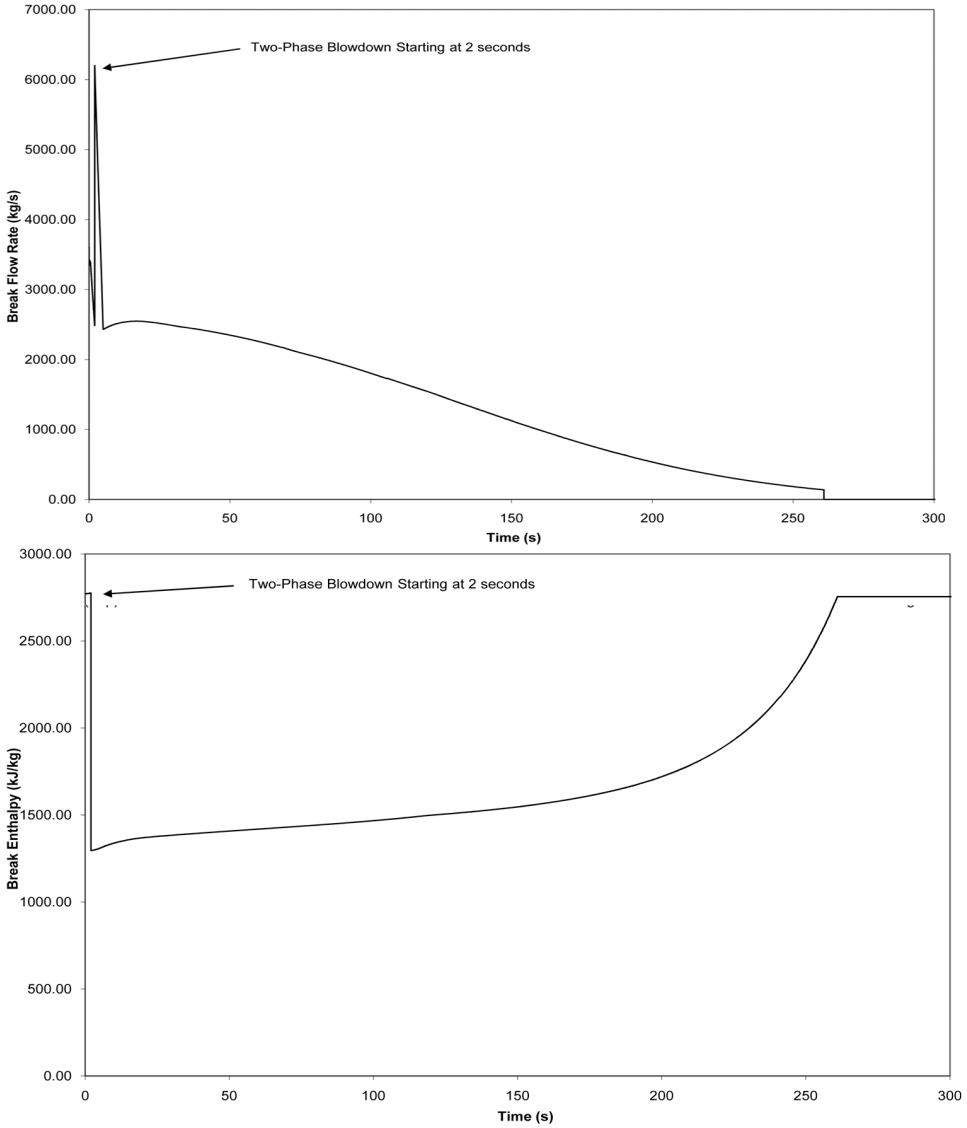

Figure 6.2-24 Break Flow Rate and Specific Enthalpy for the Main Steamline Break with Two-Phase Blowdown Starting When the Collapsed Water Level Reaches the Steam Nozzle

Figure 6.2-25 Not Used

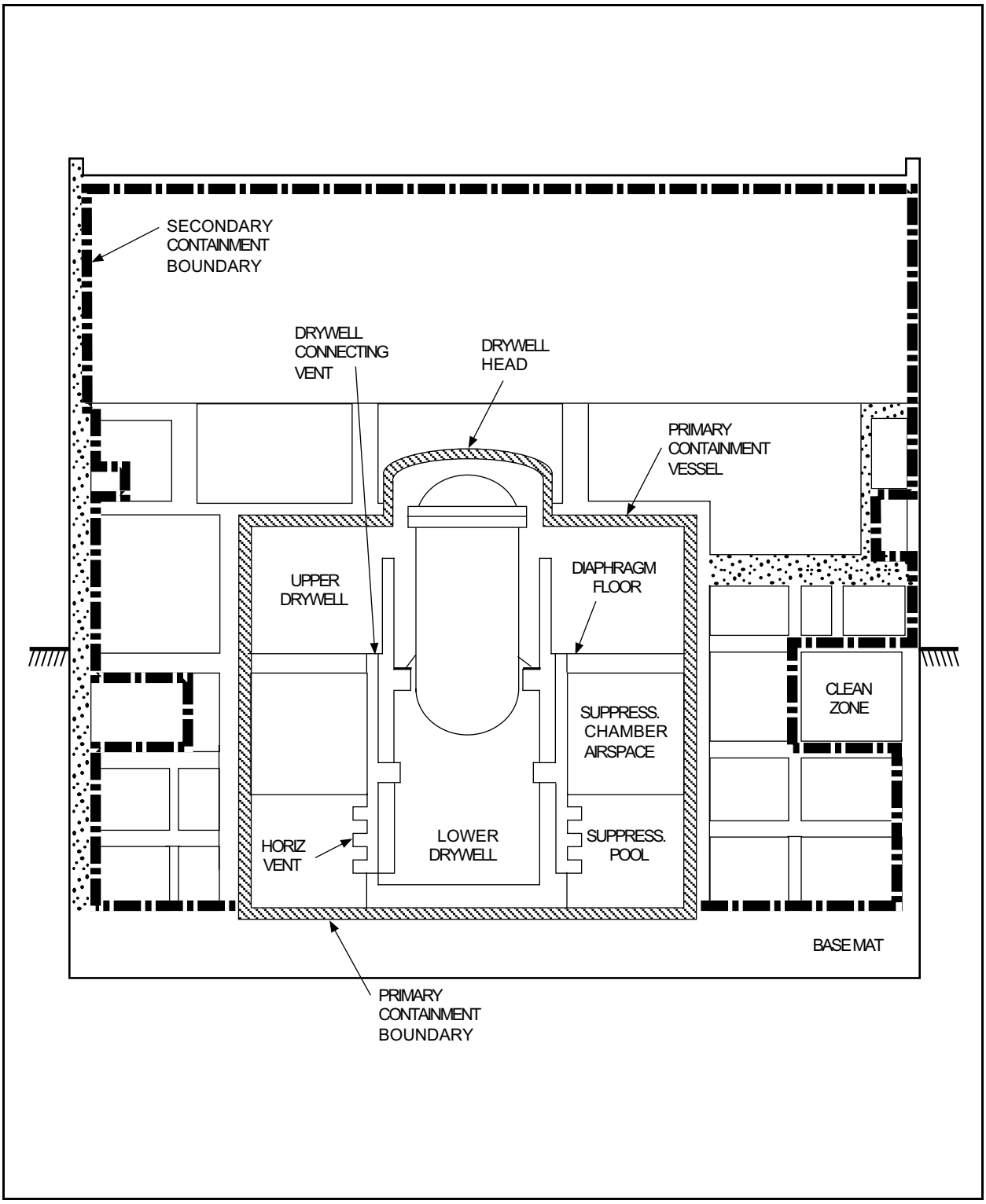

Figure 6.2-26 ABWR Containment Boundary Nomenclature

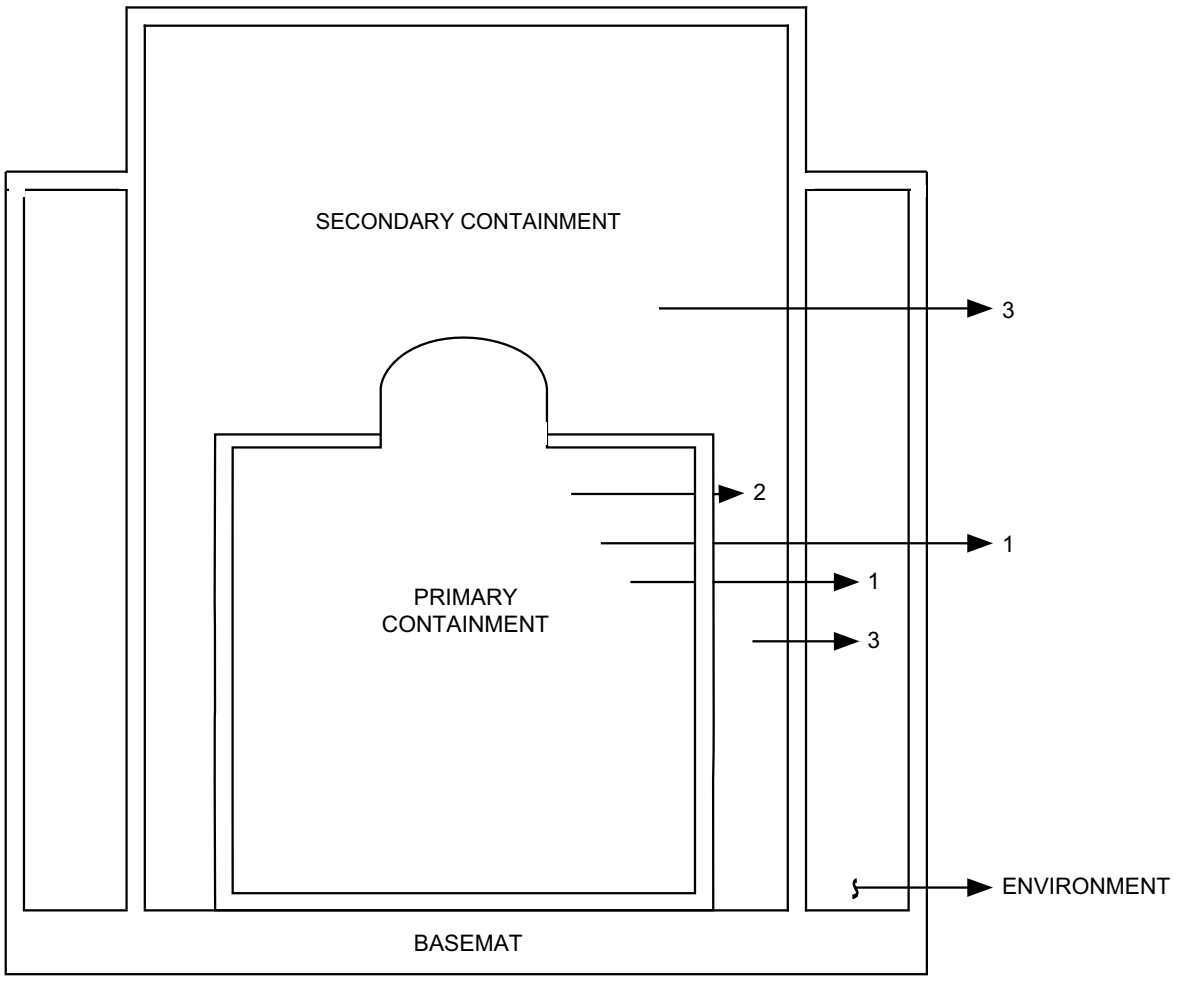

LEAKAGE FROM:

1. PRIMARY CONTAINMENT TO ENVIRONMENT OR CLEAN ZONE
2. PRIMARY CONTAINMENT TO SECONDARY CONTAINMENT
3. SECONDARY CONTAINMENT TO CLEAN ZONE OR THE ENVIRONMENT

Figure 6.2-27 Three Basic Types of Leakage Paths

		Refer to Figures:
Figure 6.2-28	Containment Boundaries in the Reactor Building—Plan Section A-A (0°–180°)	1.2-2
Figure 6.2-29	Containment Boundaries in the Reactor Building—Plan Section B-B (90°–270°)	1.2-2a
Figure 6.2-30	Containment Boundaries in the Reactor Building—Plan at Elevation – 8200 mm	1.2-4
Figure 6.2-31	Containment Boundaries in the Reactor Building—Plan at Elevation – 1700 mm	1.2-5
Figure 6.2-32	Containment Boundaries in the Reactor Building—Plan at Elevation 4800/8500 mm	1.2-6
Figure 6.2-33	Containment Boundaries in the Reactor Building—Plan at Elevation 12300 mm	1.2-8
Figure 6.2-34	Containment Boundaries in the Reactor Building—Plan at Elevation 18100 mm	1.2-9
Figure 6.2-35	Containment Boundaries in the Reactor Building—Plan at Elevation 23500 mm	1.2-10
Figure 6.2-36	Containment Boundaries in the Reactor Building—Plan at Elevation 31700 mm	1.2-12

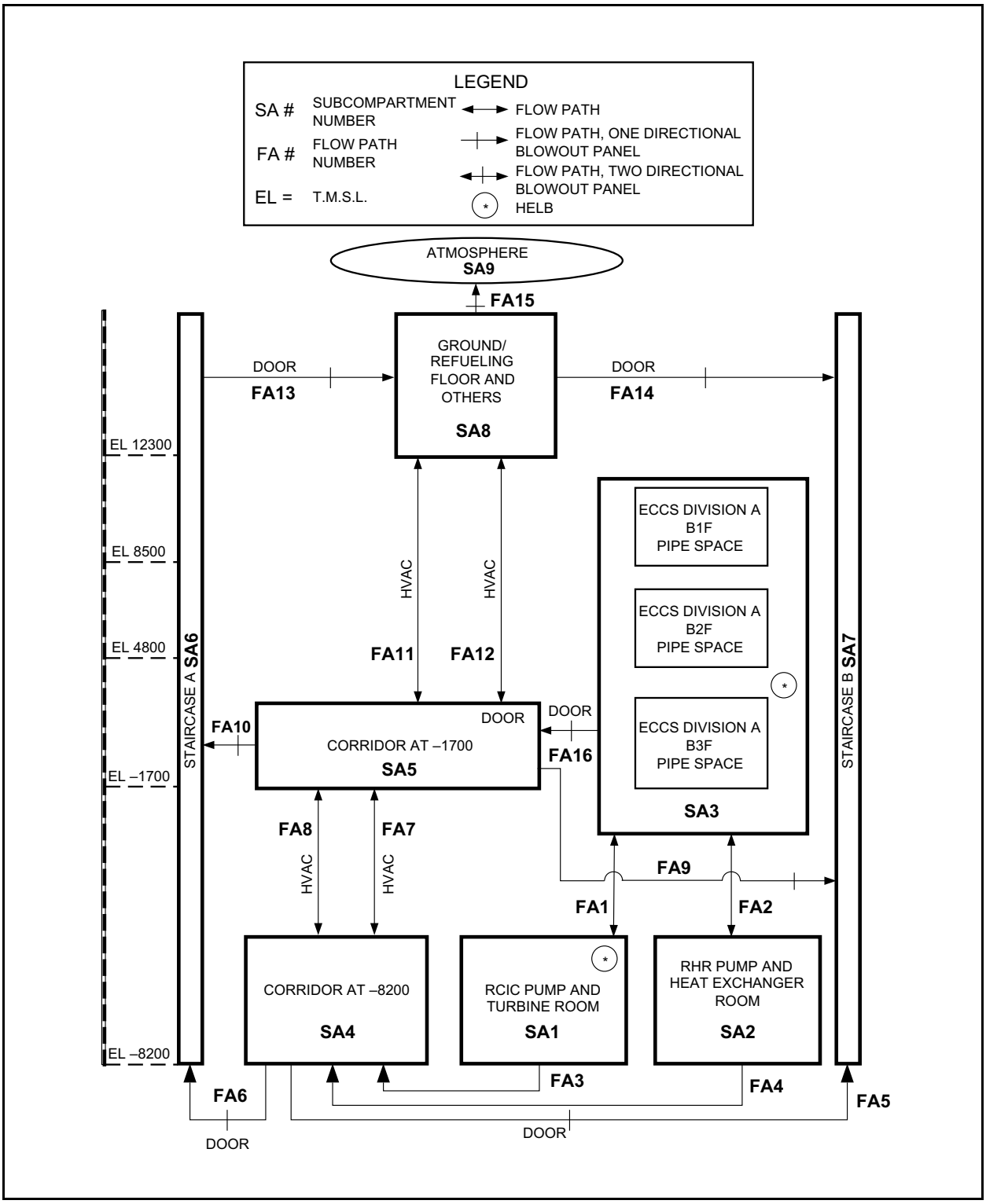

Figure 6.2-37a Secondary Containment Schematic Flow Diagram (ECCS/RCIC)

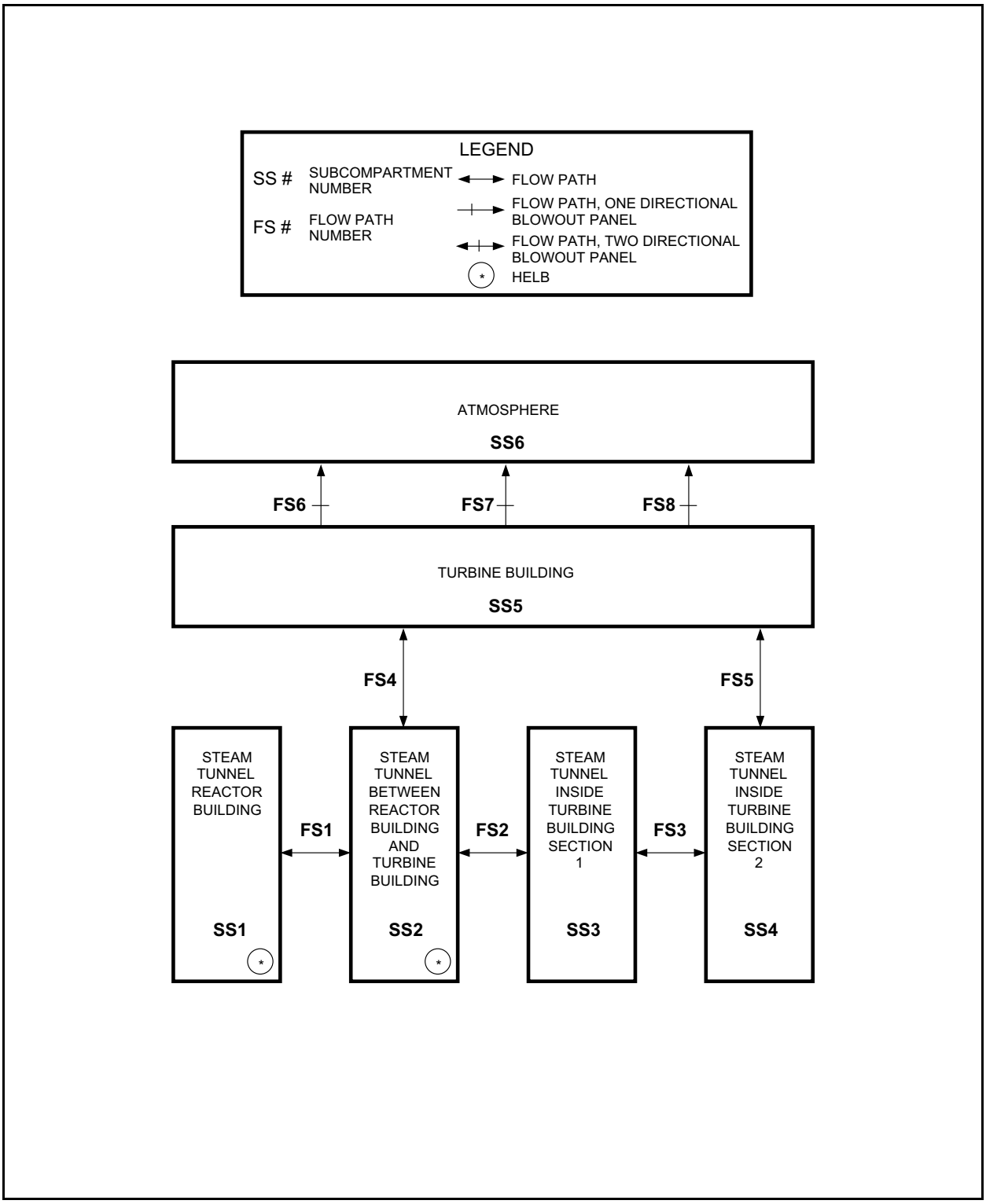

Figure 6.2-37b
Secondary Containment Schematic Flow Diagram (Main Steam/Feedwater)

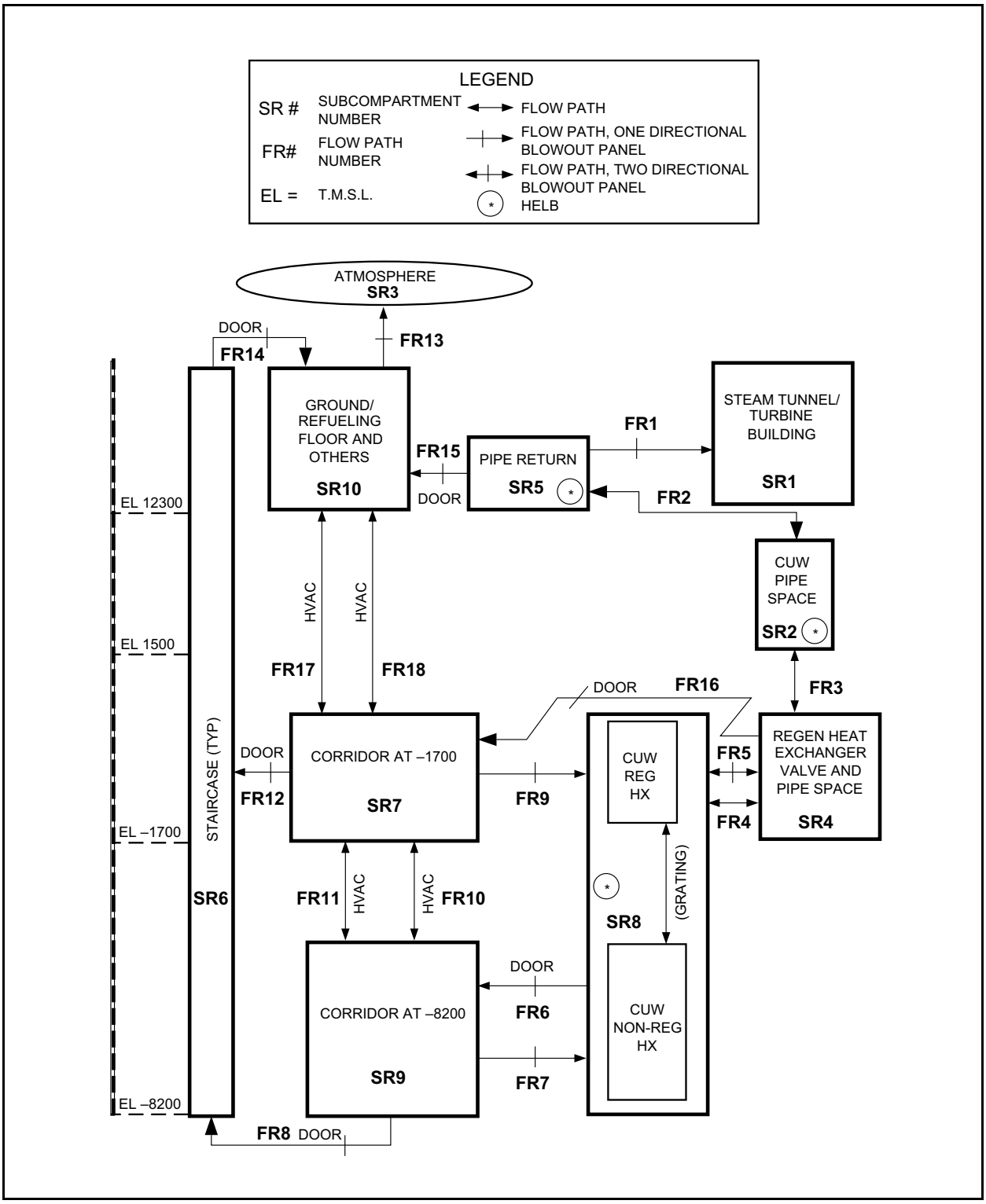

Figure 6.2-37c Secondary Containment Schematic Flow Diagram (CUW)

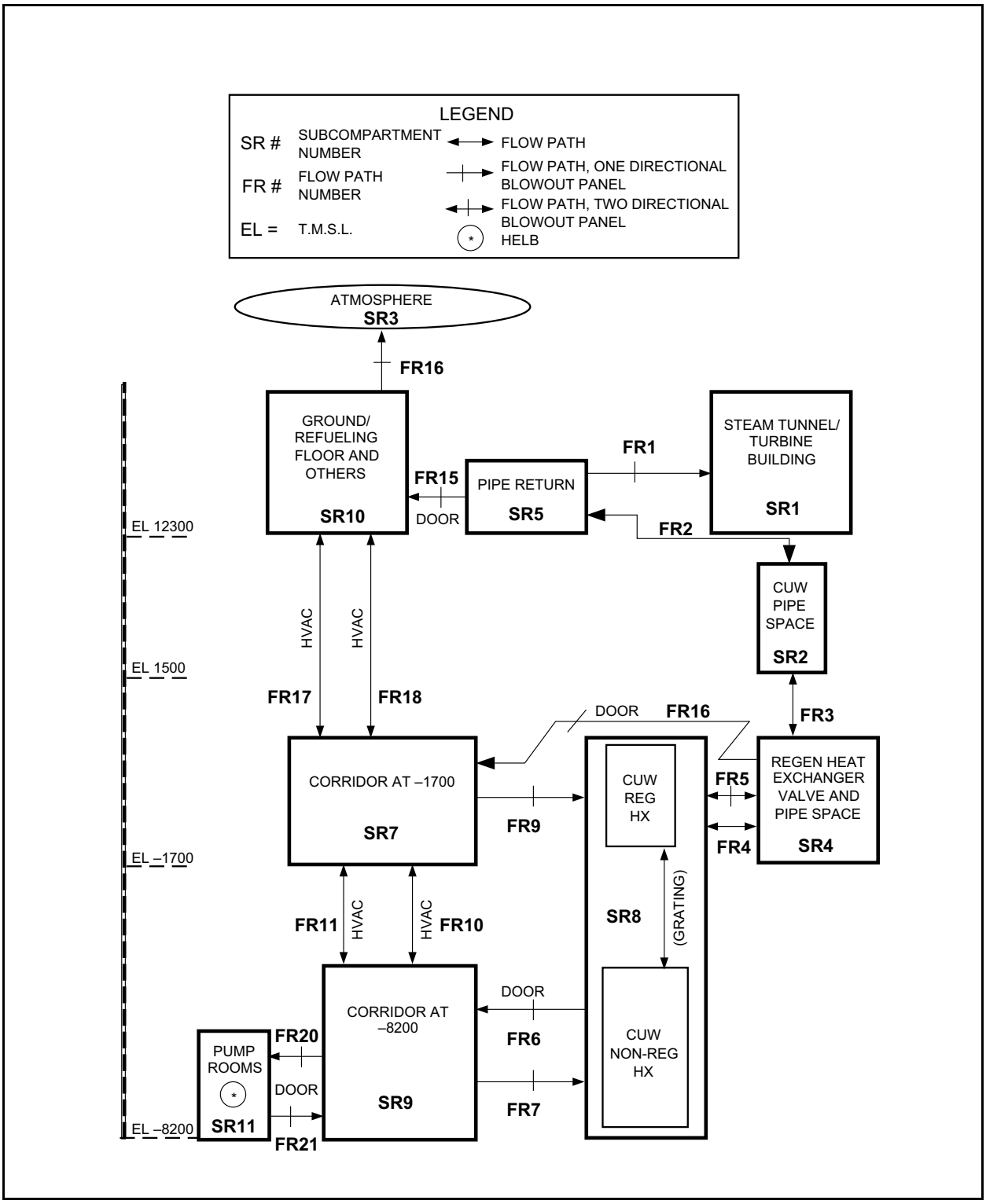

Figure 6.2-37d Secondary Containment Schematic Flow Diagram (CUW) (Continued)

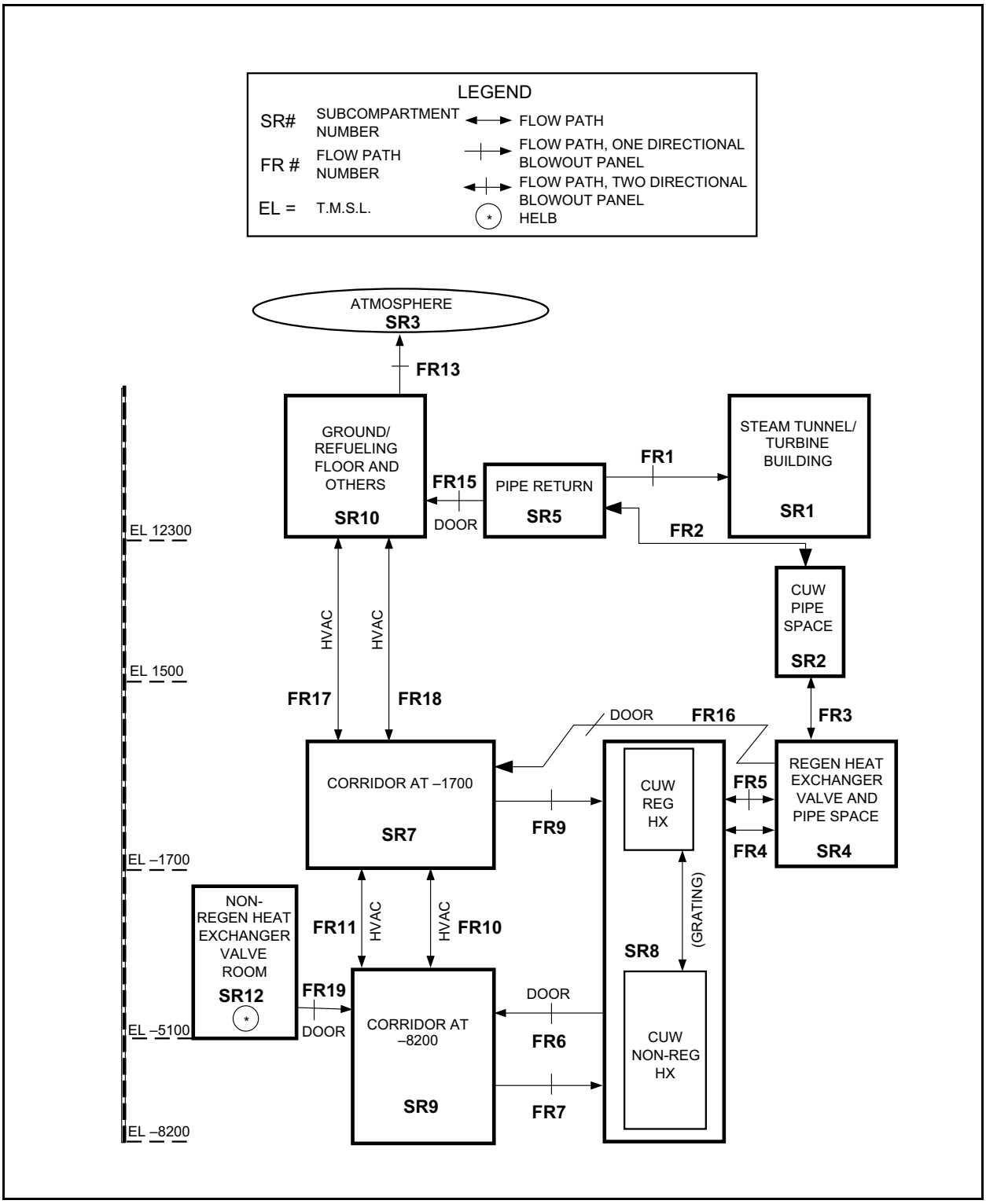

Figure 6.2-37e Secondary Containment Schematic Flow Diagram (CUW) (Continued)

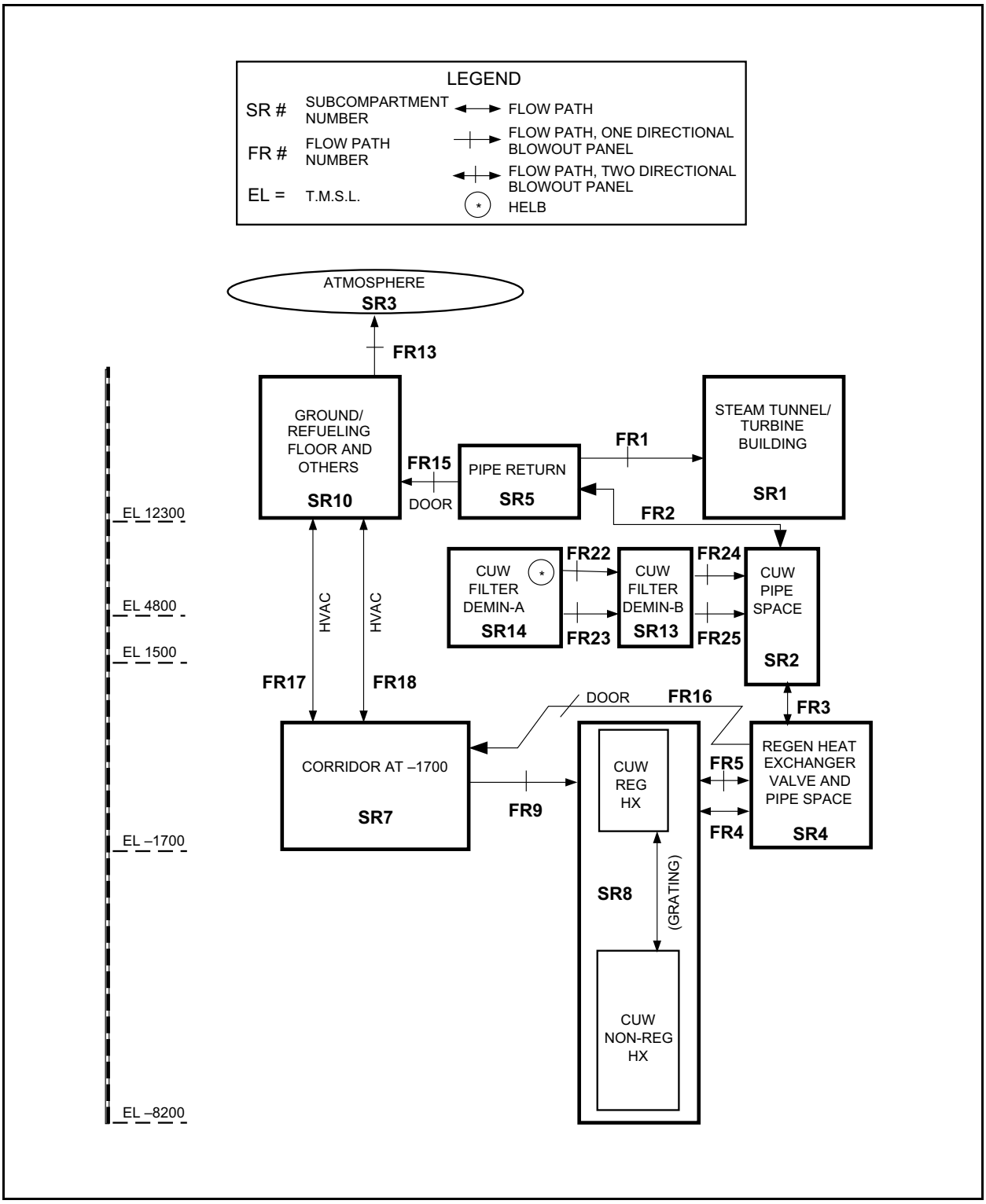

Figure 6.2-37f Secondary Containment Schematic Flow Diagram (CUW) (Continued)

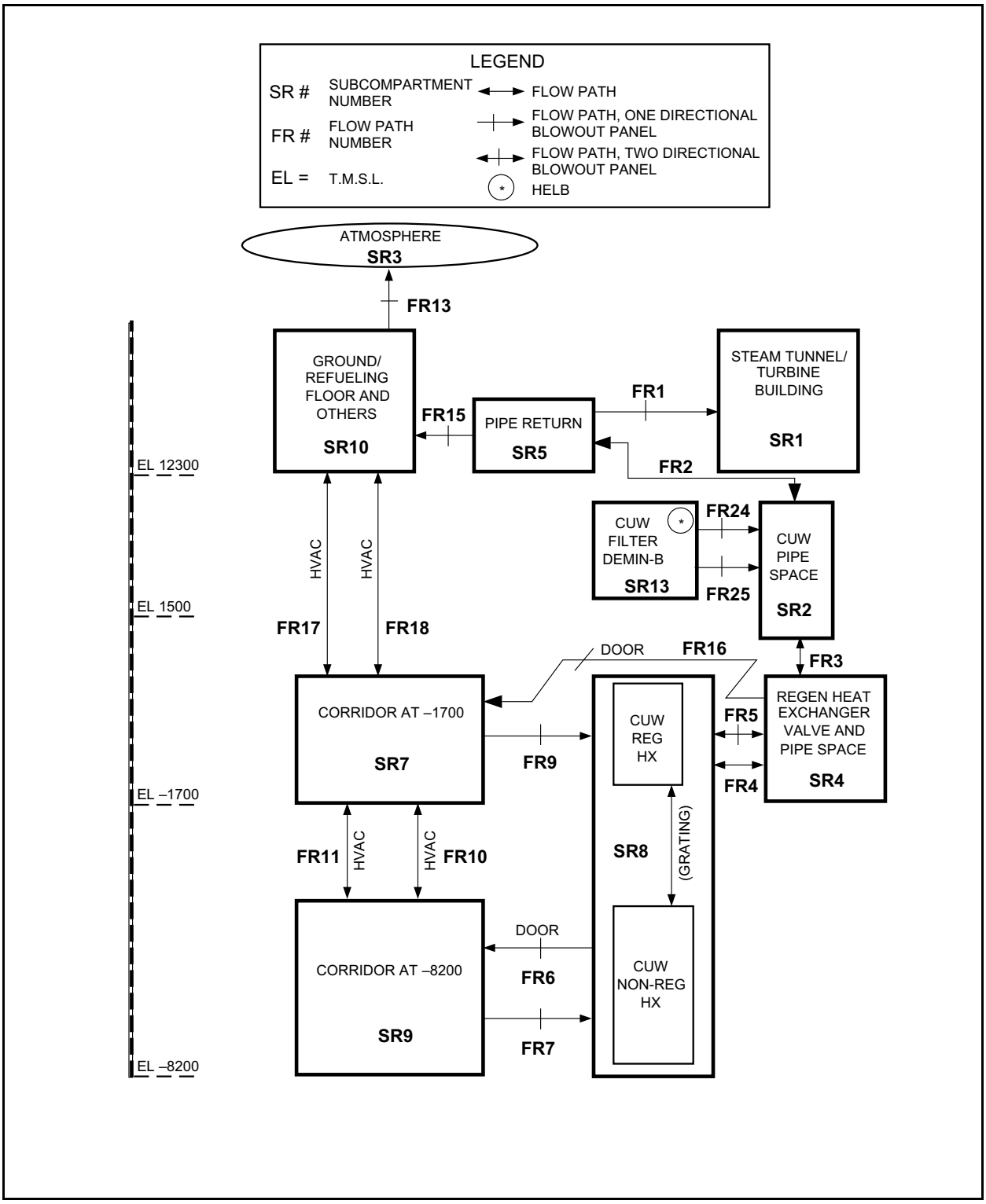

Figure 6.2-37g Secondary Containment Schematic Flow Diagram (CUW) (Continued)

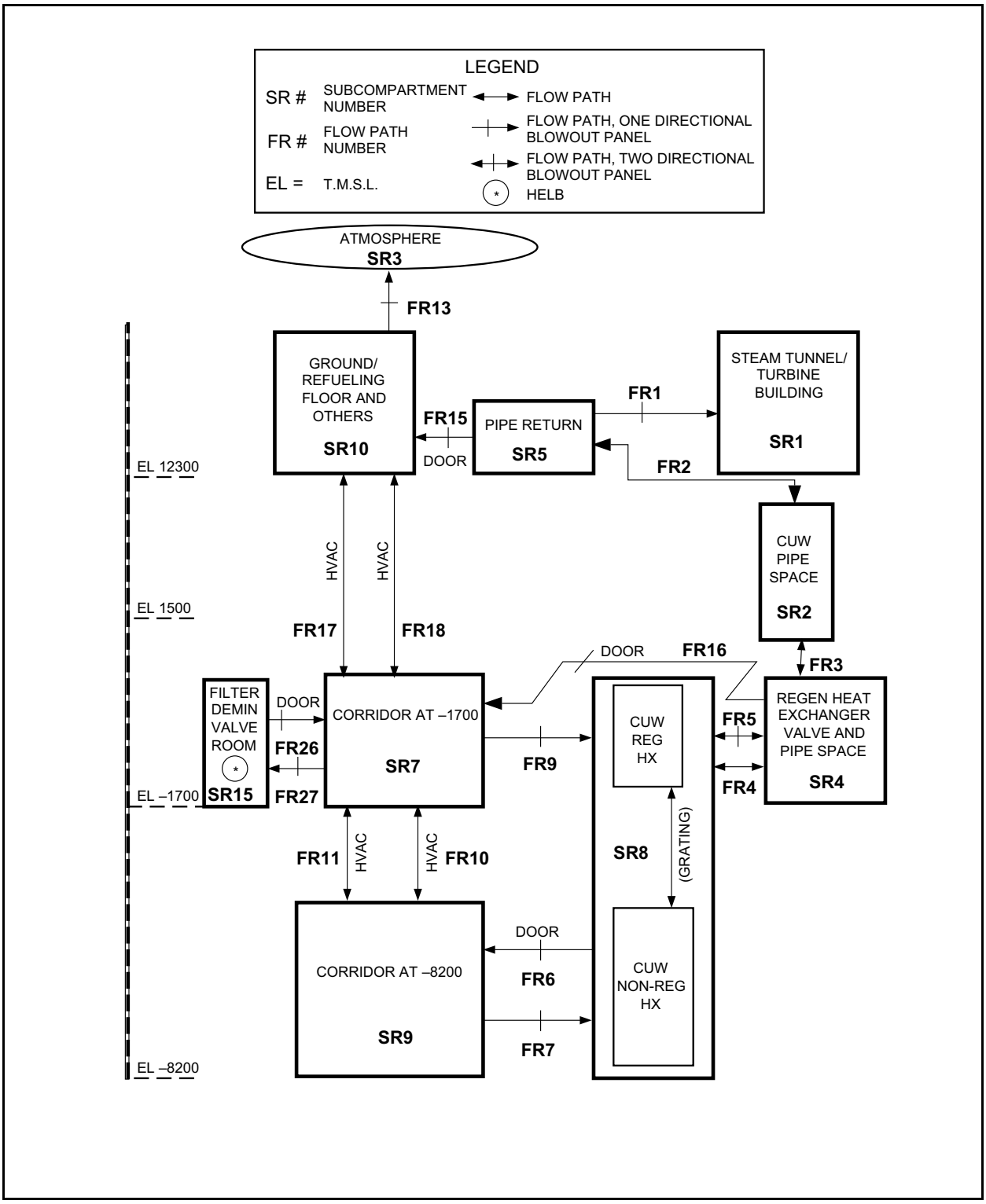

Figure 6.2-37h Secondary Containment Flow Schematic Diagram (CUW) (Continued)

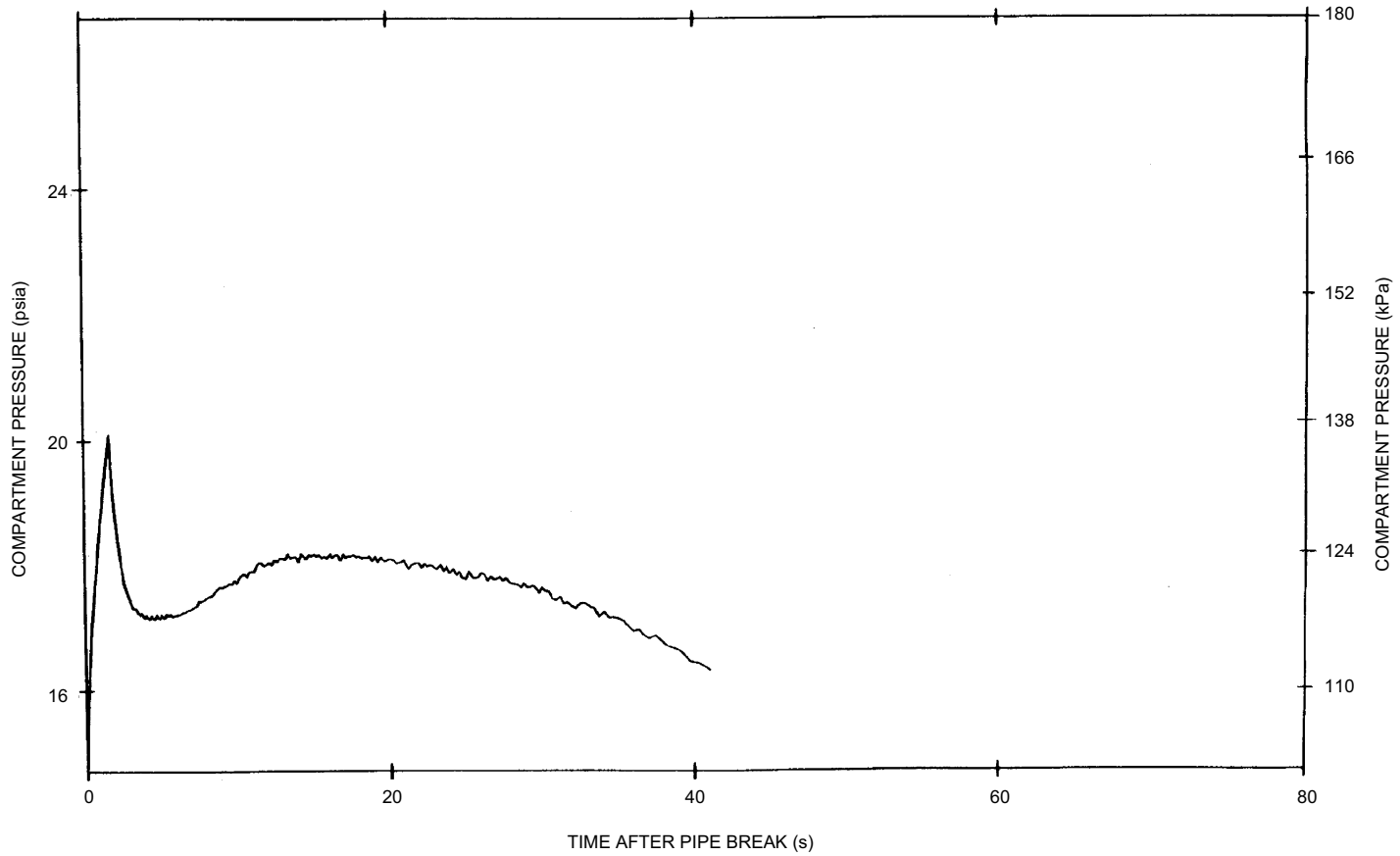

Figure 6.2-37i Pressure Transient Due to High Energy Line Break in RCIC Compartments-Isolated Cases

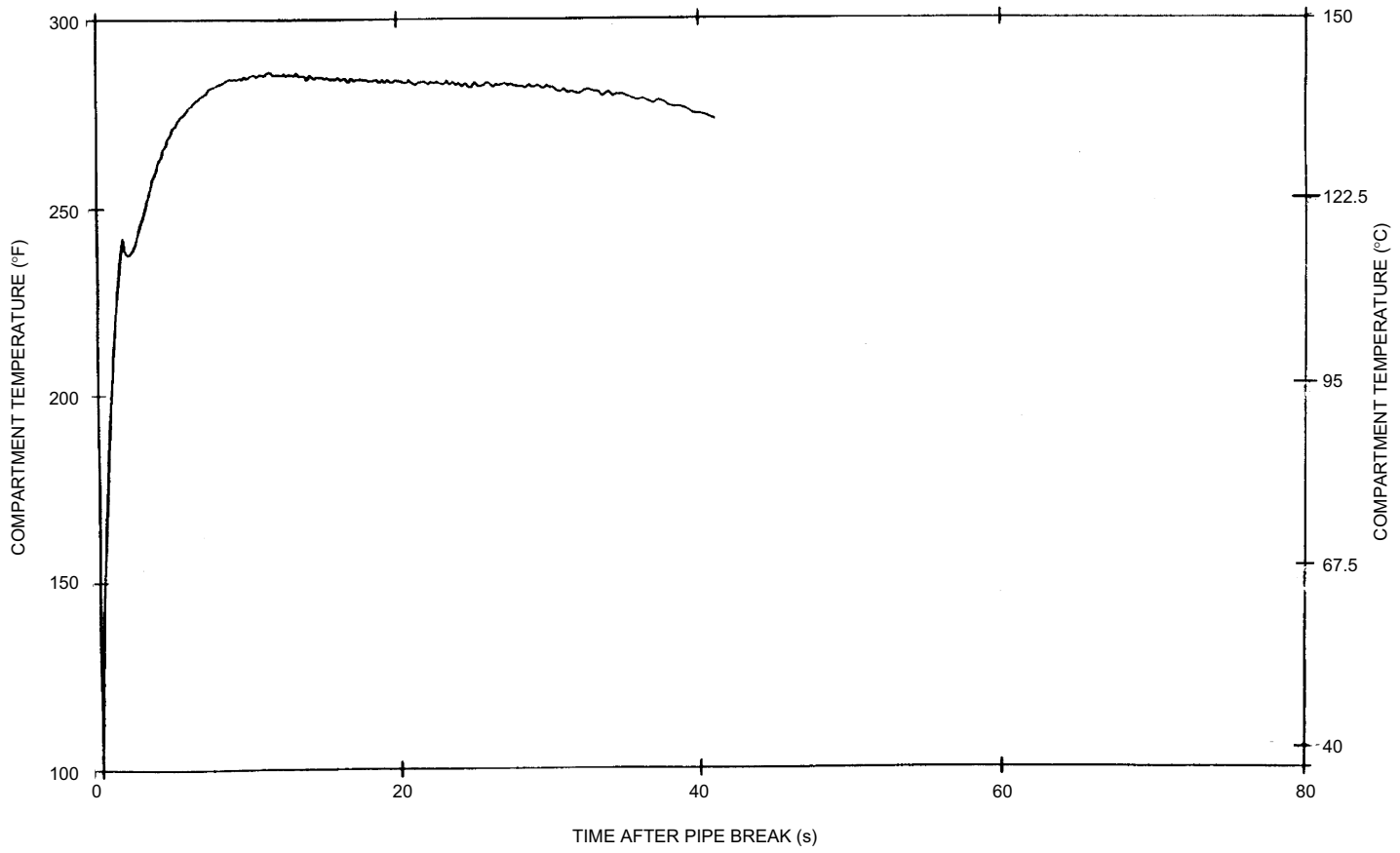

Figure 6.2-37j Temperature Transient Response Due to High Energy Line Break in RCIC Compartments

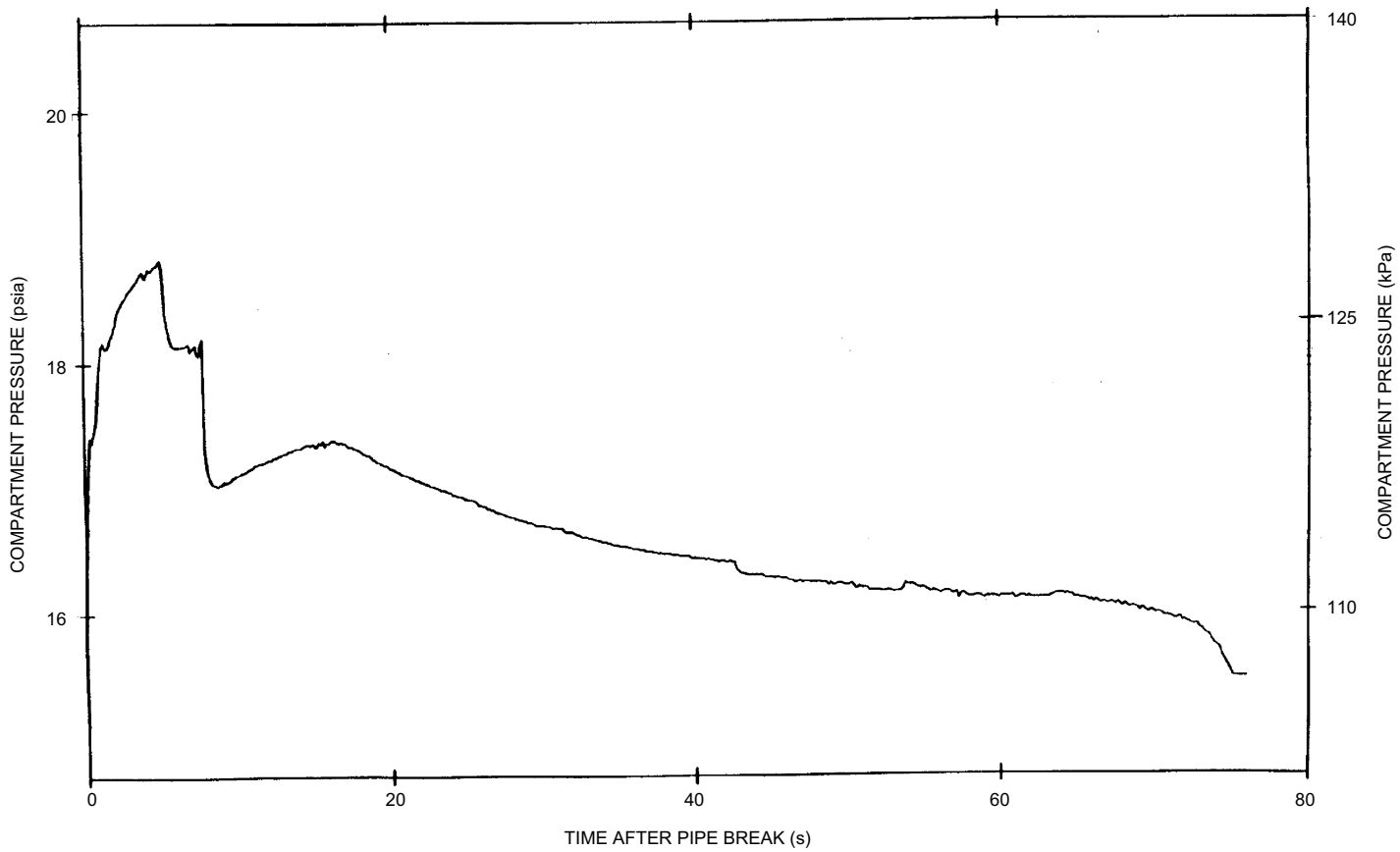

Figure 6.2-37k Pressure Transient Due to High Energy Line Breaks in CUW Compartments

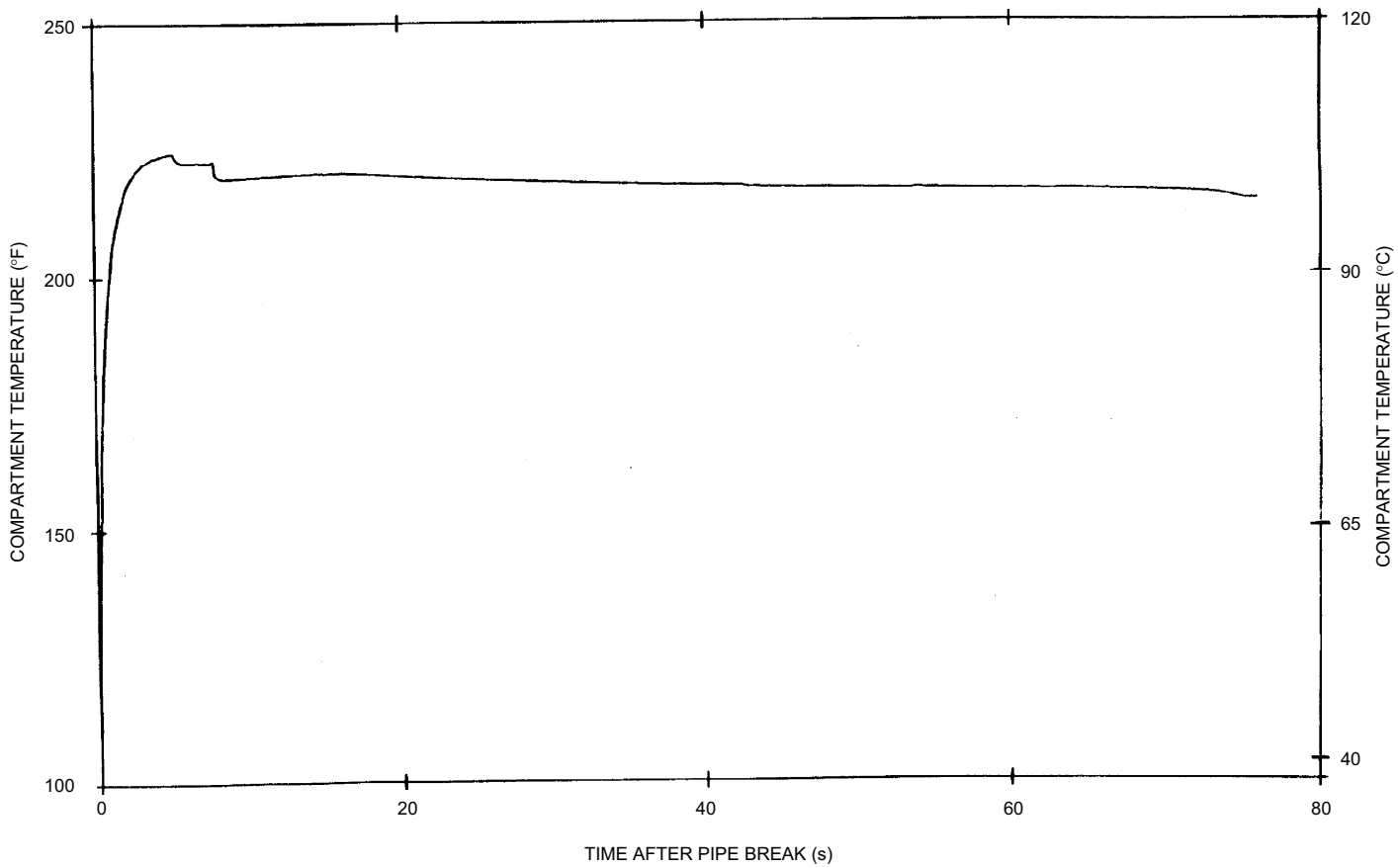

Figure 6.2-37l Temperature Transient Due to High Energy Line Breaks in CUW Compartments

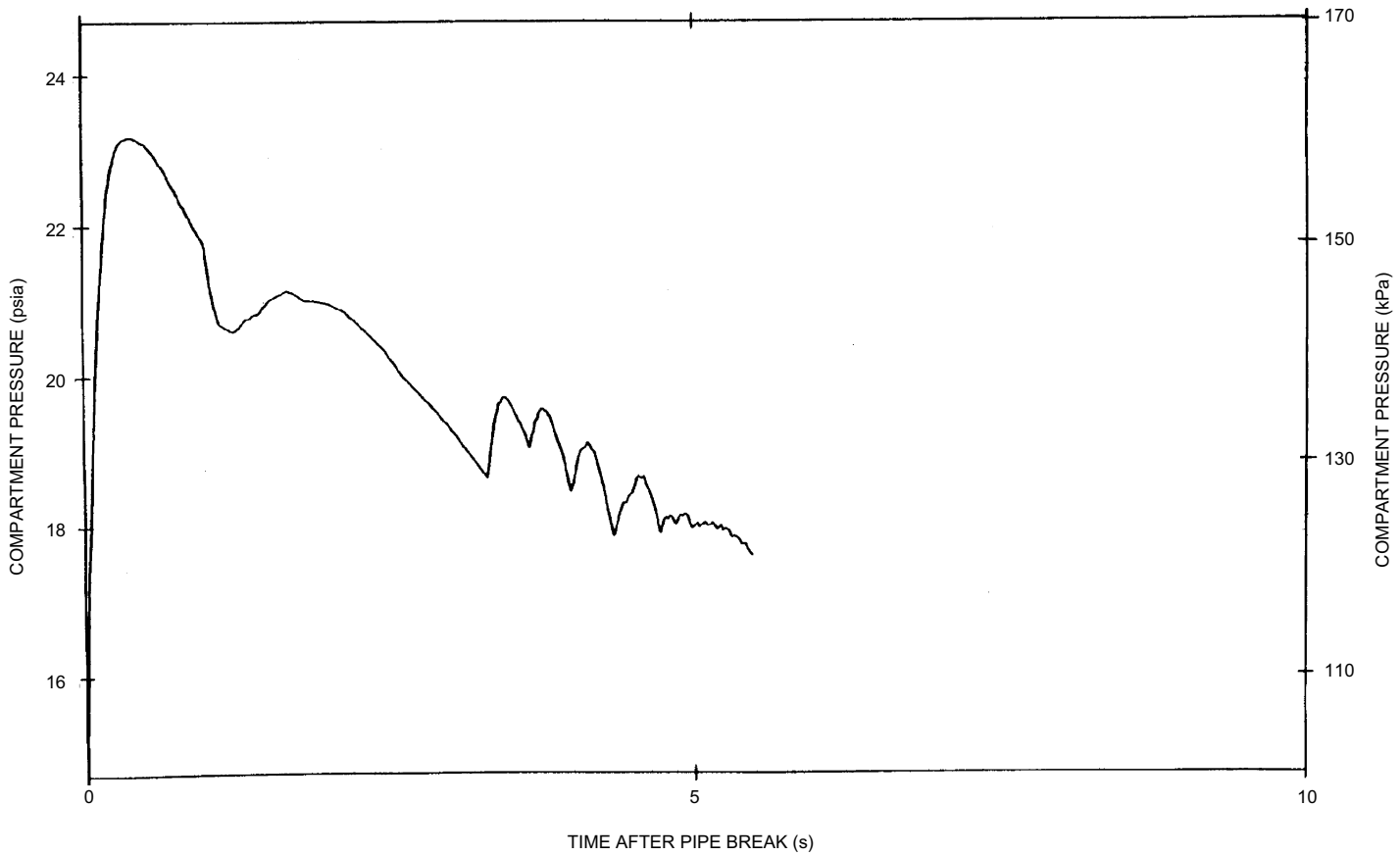

Figure 6.2-37m Pressure Transient Due to High Energy Line Break in Steam Tunnel Compartments

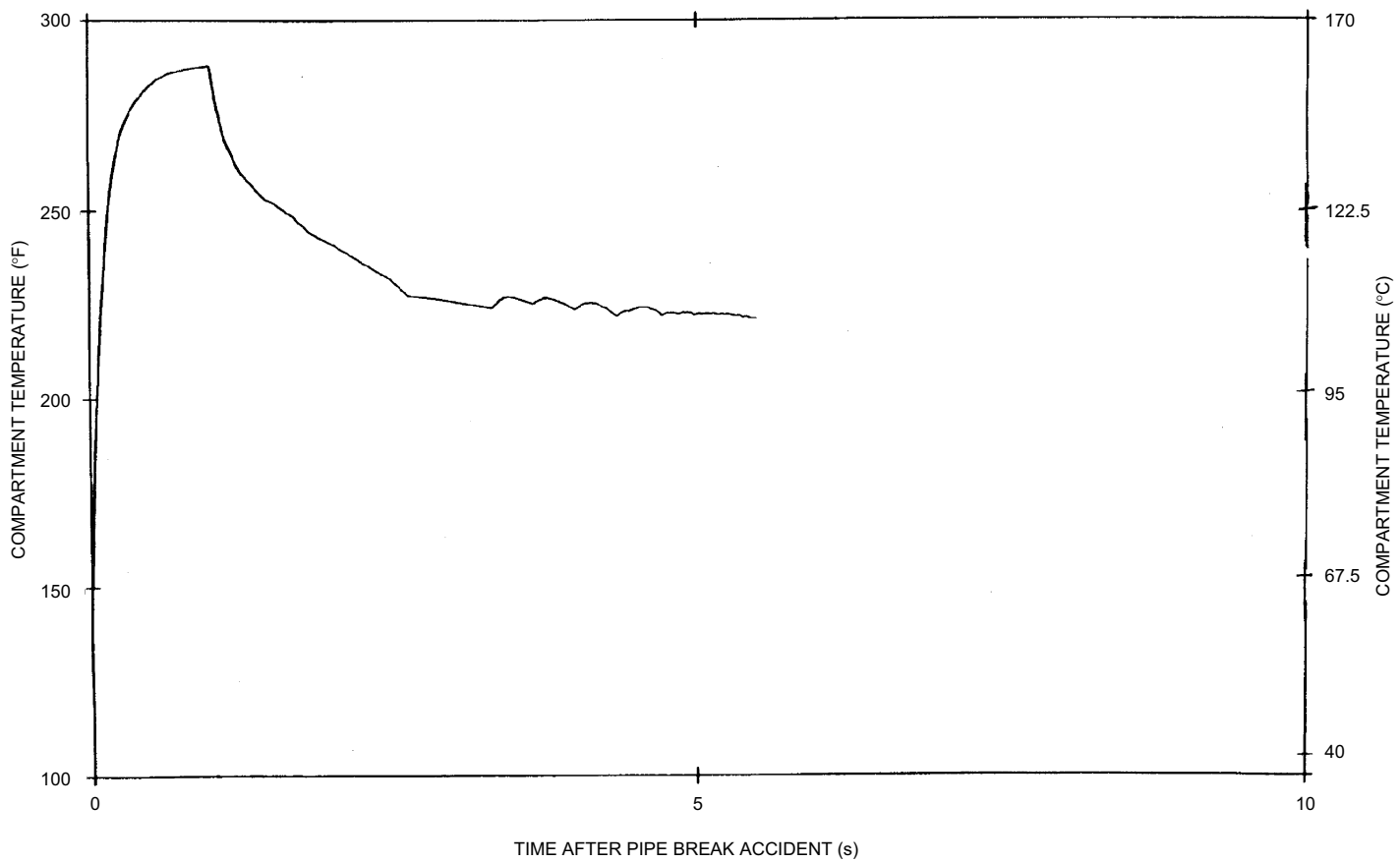

Figure 6.2-37n Temperature Transient Due to High Energy Line Break in Steam Tunnel Compartments

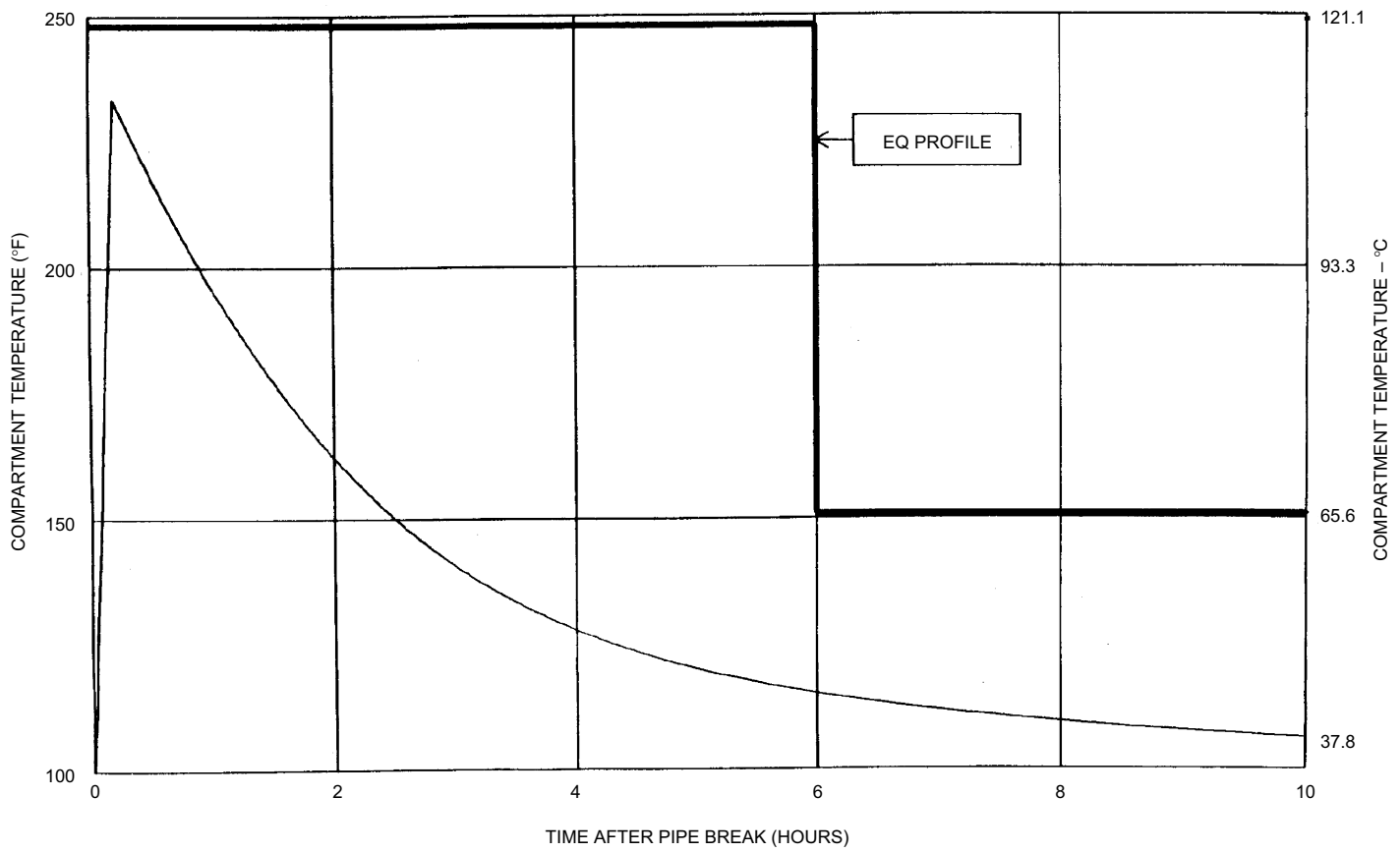

Figure 6.2-37o Compartment Temperature Response Due to High Energy Line Break in CUW Rooms

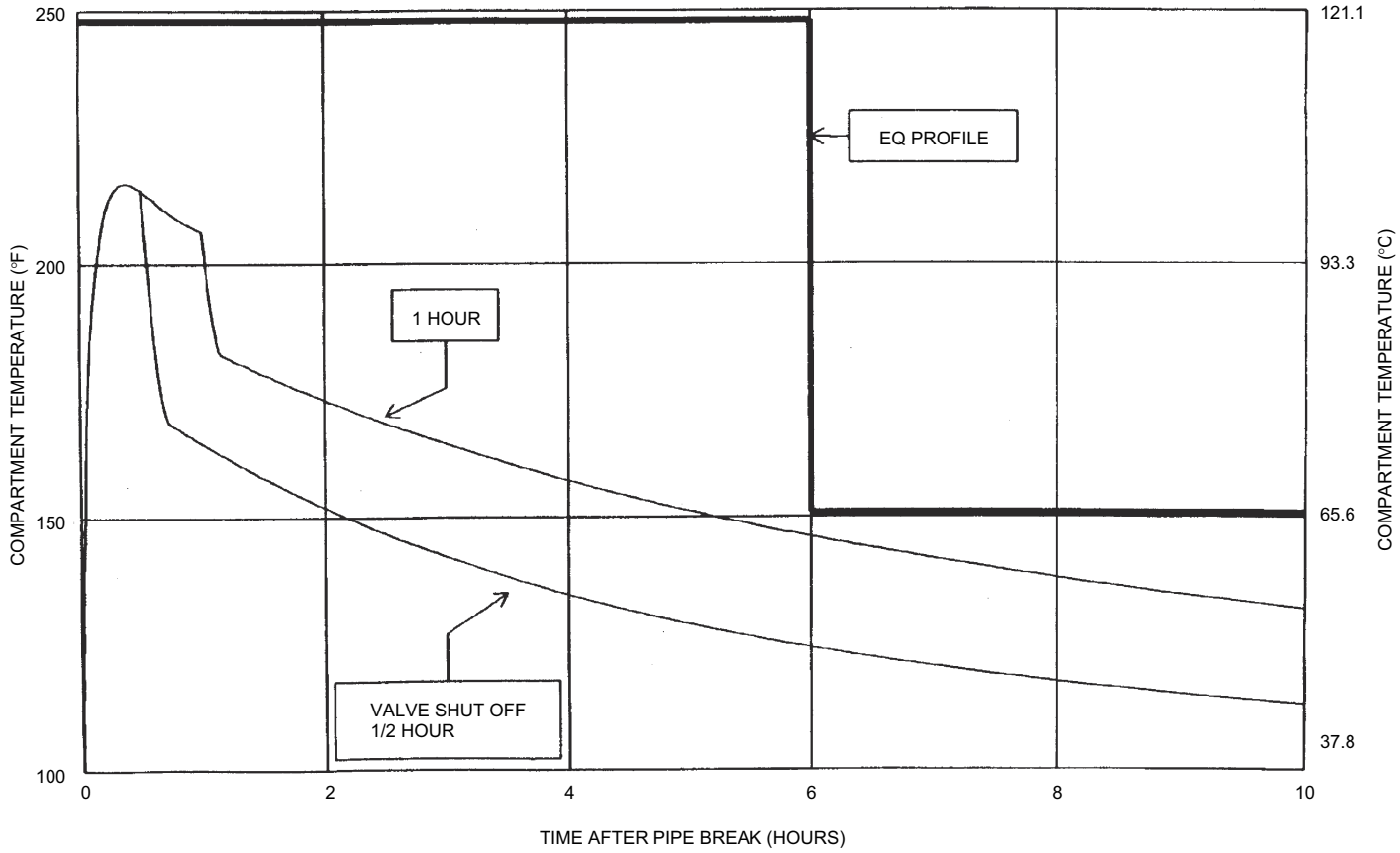

Figure 6.2-37p Compartment Transient Temperature Response Due to High Energy Line Break in CUW-Unisolated Case

The following figures are located in Chapter 21:

Figure 6.2-38 Plant Requirements, Group Classification and Containment Isolation Diagram (Sheets 1 – 2)

Figure 6.2-39 Atmospheric Control System P&ID (Sheets 1 – 3)

Figure 6.2-40 Flammability Control System P&ID (Sheets 1 – 2)

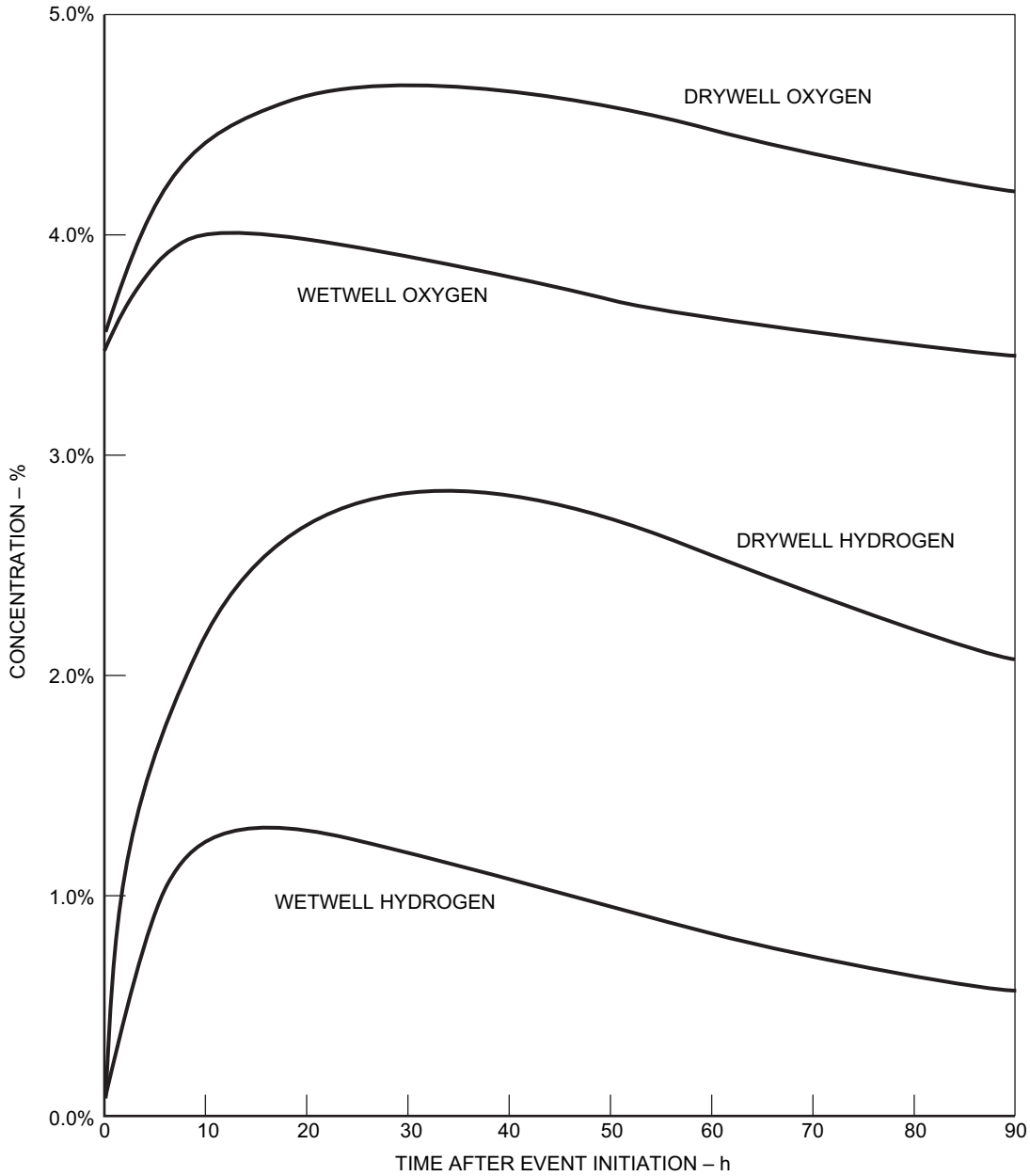

Figure 6.2-41 Hydrogen and Oxygen Concentrations in Containment After Design Basis LOCA

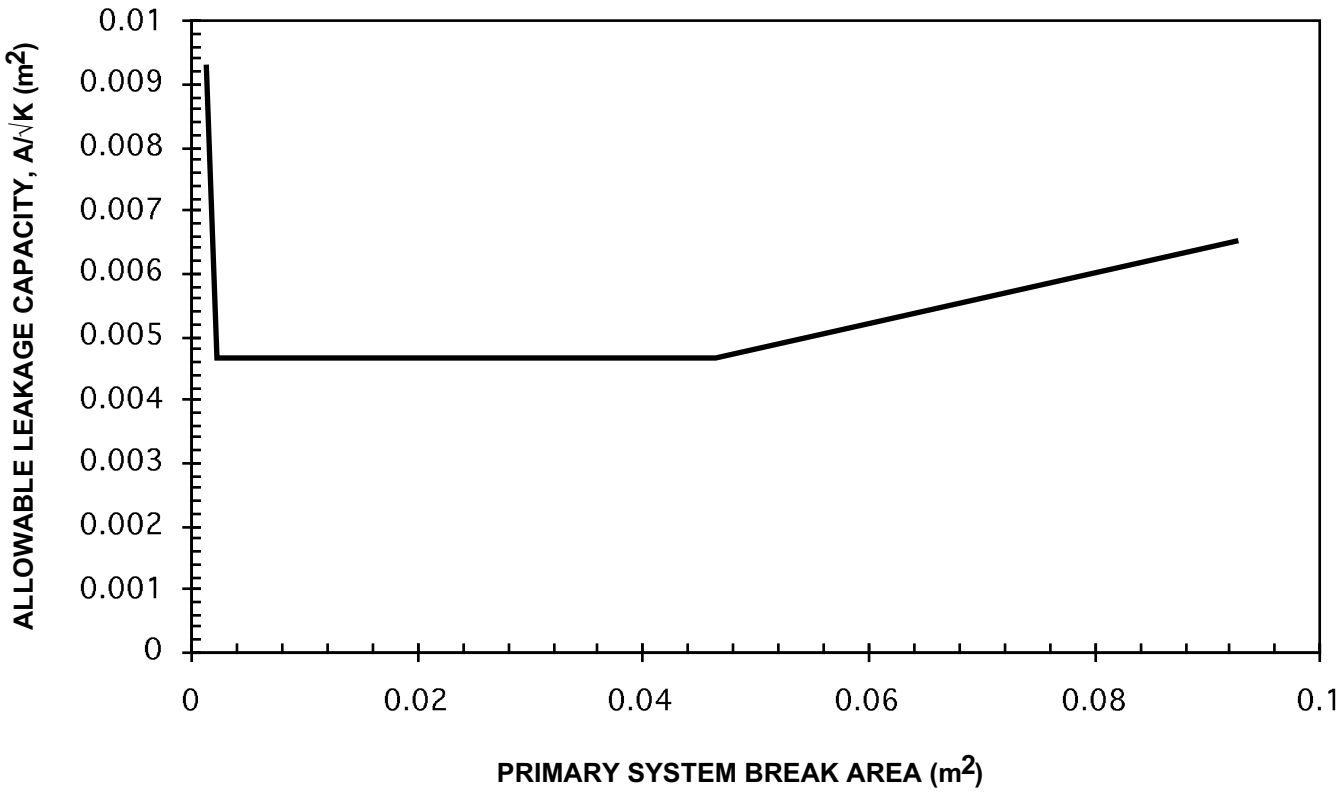

Figure 6.2-42 Allowable Steam Bypass Leakage Capacity

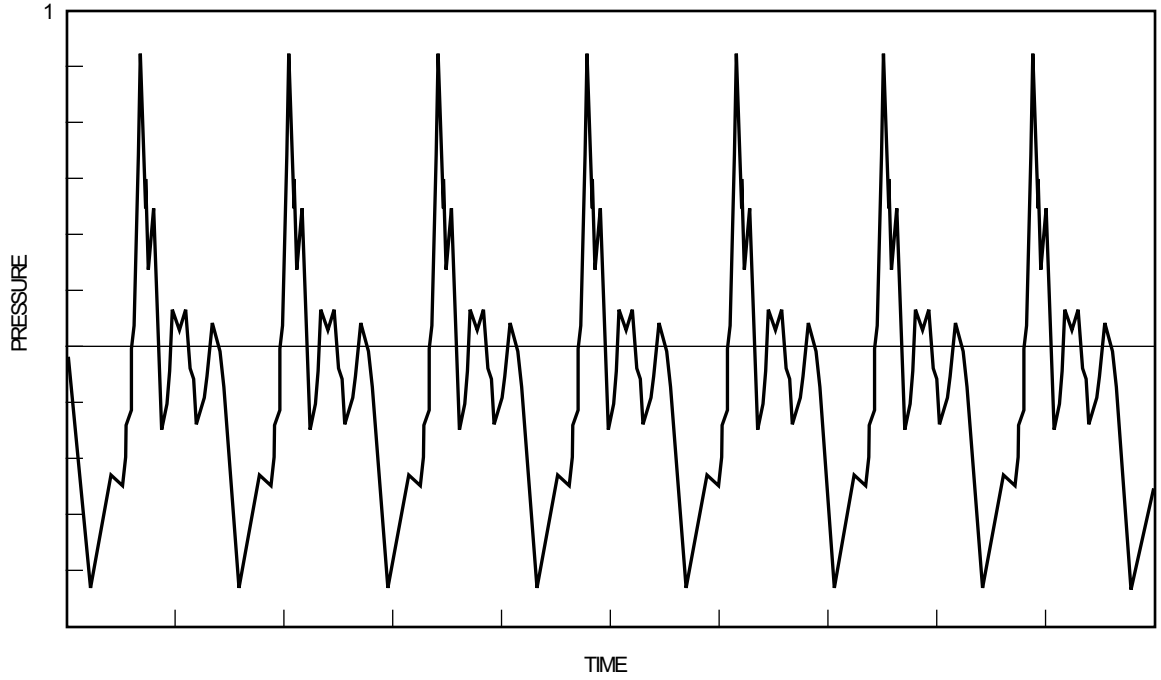

Figure 6.2-43 Typical Pressure Fluctuation Due to CO (See Figure 3B-22)

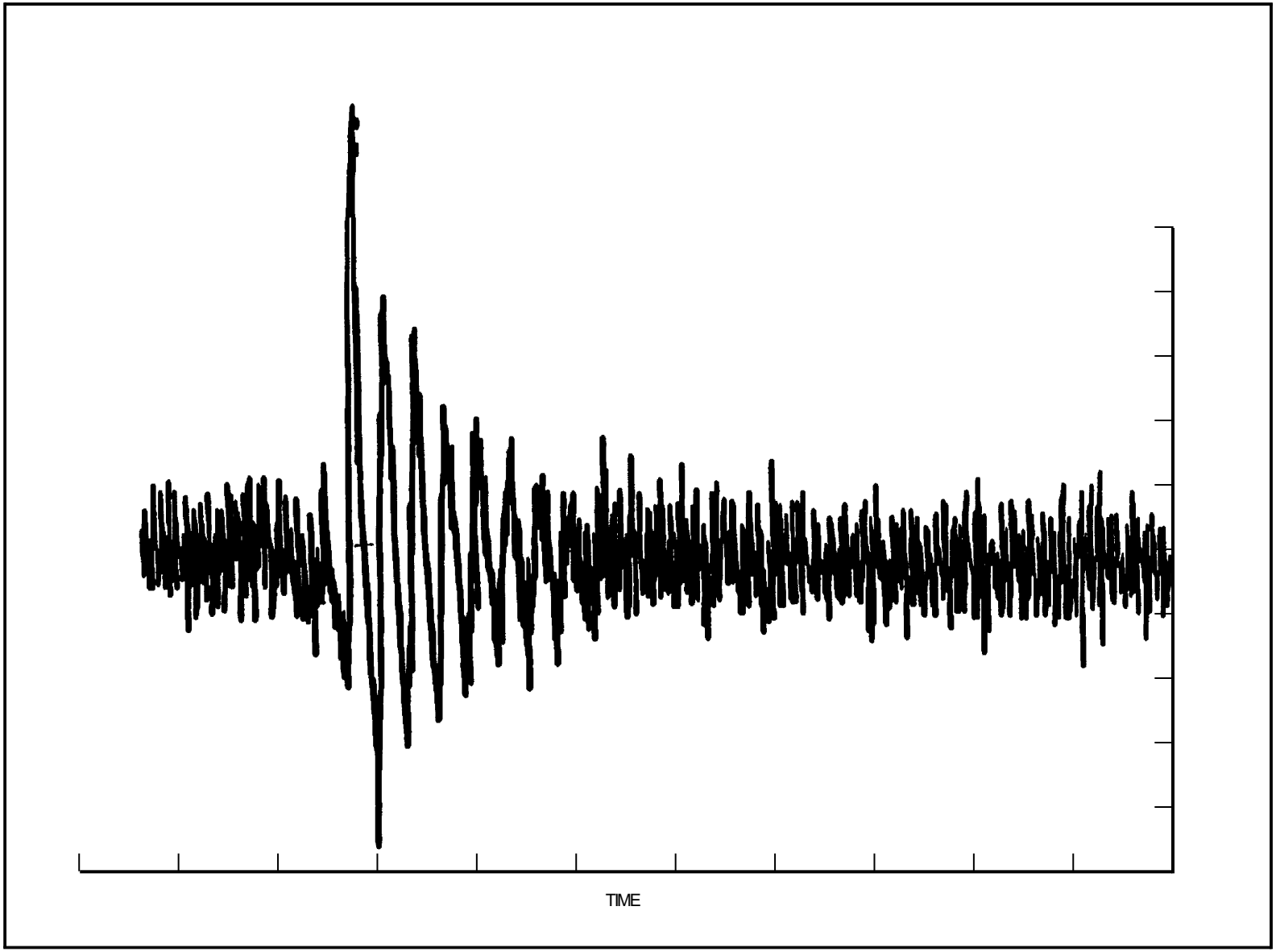

Figure 6.2-44 Typical Pressure Fluctuation Due To CH (See Figure 3B-24)

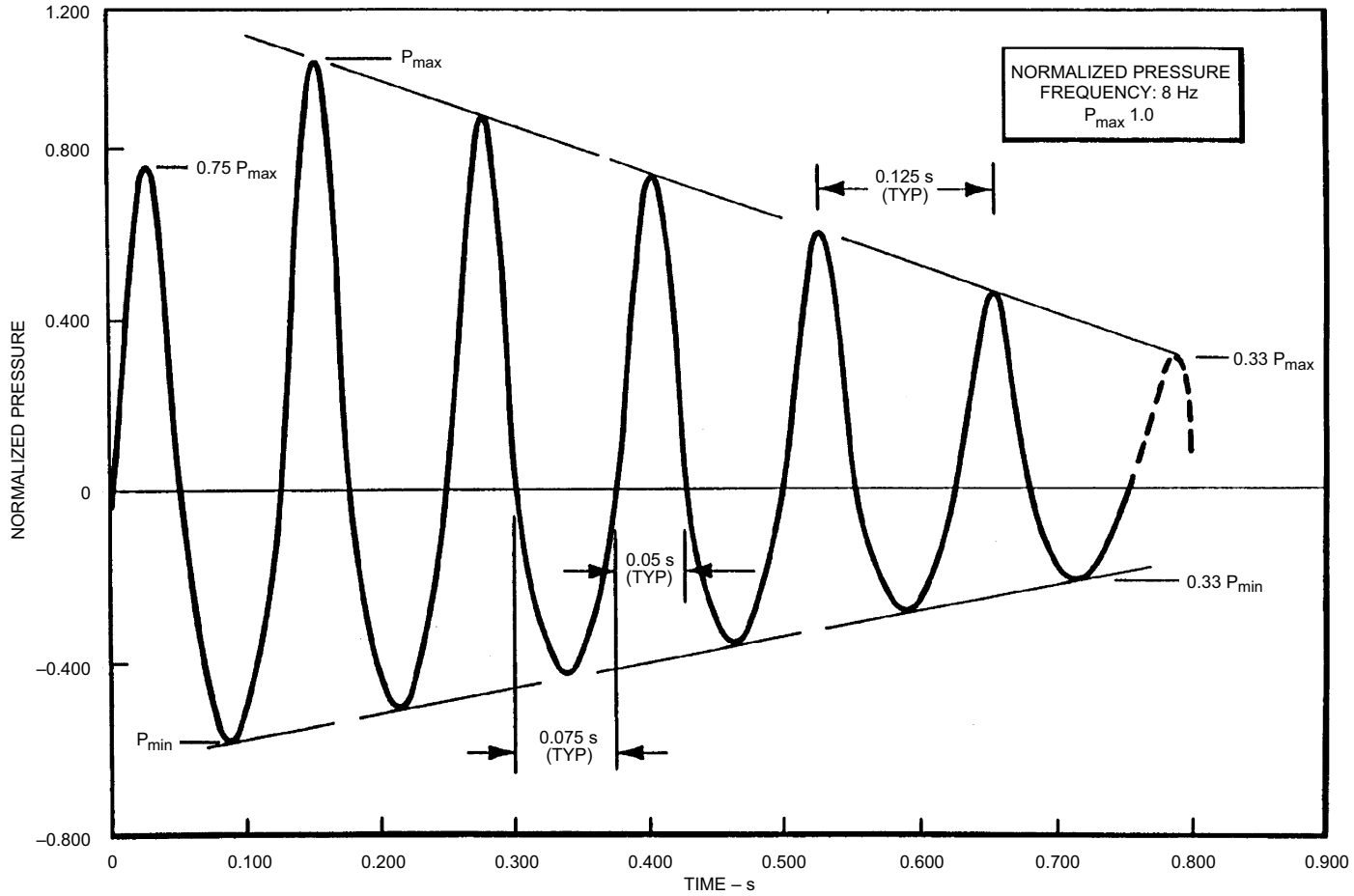

Figure 6.2-45 Quencher Bubble Pressure Time History

6.3 Emergency Core Cooling Systems

6.3.1 Design Bases and Summary Description

Subsection 6.3.1 provides the design bases for the Emergency Core Cooling Systems (ECCS) and a summary description of the several systems as an introduction to the more detailed design descriptions provided in Subsection 6.3.2 and the performance analysis provided in Subsection 6.3.3.

6.3.1.1 Design Bases

6.3.1.1.1 Performance and Functional Requirements

The ECCS is designed to provide protection against postulated loss-of-coolant accidents (LOCAs) caused by ruptures in primary system piping. The functional requirements (e.g., coolant delivery rates) specified in detail in Table 6.3-1 are such that the system performance under all LOCA conditions postulated in the design satisfies the requirements of 10CFR50, Paragraph 50.46 (Acceptance Criteria for Emergency Core Cooling System for Light-Water-Cooled Nuclear Power Reactors). These requirements are summarized in Subsection 6.3.3.2. In addition, the ECCS is designed to meet the following requirements:

(1) Protection is provided for any primary system line breakup, including the double-ended break of the largest line.

(2) Three high-pressure cooling systems are provided, each of which is capable of maintaining water level above the top of the core and preventing ADS actuation for breaks of lines less than 25A.

(3) No operator action is required until 30 min after an accident to allow for operator assessment and decision.

(4) The ECCS is designed to satisfy all criteria specified in Section 6.3 for any normal mode of reactor operation.

(5) A sufficient water source and the necessary piping, pumps and other hardware are provided so that the containment and reactor core can be flooded for possible core heat removal following a LOCA.

6.3.1.1.2 Reliability Requirements

The following reliability requirements apply:

(1) The ECCS must conform to all licensing requirements and good design practices of isolation, separation and common mode failure considerations.

(2) In order to meet the above requirements, the ECCS network has built-in redundancy so that adequate cooling can be provided, even in the event of specified failures. As a minimum, the following equipment make up the ECCS:

(a) Reactor Core Isolation Cooling (RCIC) Loop

(b) High Pressure Core Flooder (HPCF) Loops

(c) Low Pressure Flooder (LPFL) mode of Residual Heat Removal (RHR) Loops

(d) Automatic Depressurization System (ADS)

(3) The system shall be designed so that a single active or passive component failure, including power buses, electrical and mechanical parts, cabinets and wiring will not disable the ADS.

(4) In the event of a break in a pipe that is not part of the ECCS, no single active component failure in the ECCS shall prevent automatic initiation and successful operation of less than the following combinations of ECCS equipment:

(a) One HPCF + RCIC + two LPFL + all ADS valves

(b) Two HPCF + three LPFL + all ADS valves

(c) Two HPCF + RCIC + three LPFL + all ADS valves minus one

(5) In the event of a break in a pipe that is a part of ECCS, no single active component failure in the ECCS prevents automatic initiation and successful operation of less than the following combination of ECCS equipment as identified in Subsection 6.3.1.1.2 (4), minus the ECCS in which the break is assumed.

These are the minimum ECCS combinations which result after assuming any failure (from item (4) above) and assuming that the ECCS line break disables the affected system.

(6) Long-term (10 min after initiation signal) cooling requirements call for the removal of decay heat via the reactor service water system. In addition to the break which initiated the loss-of-coolant event, the system must be able to sustain one failure, either active or passive and still have at least two low pressure pumps with heat exchangers receiving 100% service water flow and one ECCS pump that provides flow to the vessel, which can be one of the low pressure pumps.

(7) Offsite power is the preferred source of power for the ECCS network, and every reasonable precaution must be made to assure its high availability. However, onsite emergency power shall be provided with sufficient diversity and capacity so that all the above requirements can be met even if offsite power is not available.

(8) The onsite diesel fuel reserve is in accordance with Regulatory Guide 1.137.

(9) The diesel-load configuration provides one diesel generator for each of the three ECCS divisions.

(10) Systems which interface with, but are not part of, the ECCS are designed and operated such that failure(s) in the interfacing systems shall not propagate to and/or affect the performance of the ECCS.

(11) Each system of the ECCS, including flow rate and sensing networks, is capable of being tested during plant operation, including logic required to automatically initiate component action.

(12) Provisions for testing the ECCS network components (electronic, mechanical, hydraulic and pneumatic, as applicable) are installed in such a manner that they are an integral part of the design.

6.3.1.1.3 ECCS Requirements for Protection from Physical Damage

The ECCS piping and components are protected against damage from:

(1) Movement

(2) Thermal stresses

(3) Effects of the LOCA

(4) Effects of the safe shutdown earthquake

The ECCS is protected against the effects of pipe whip, which might result from piping failures up to and including the design basis event LOCA. This protection is provided by separation, pipe whip restraints, or energy-absorbing materials if required. One of these three methods will be applied to provide protection against damage to piping and components of the ECCS which otherwise could result in a reduction of ECCS effectiveness to an unacceptable level.

The ECCS piping and components located outside the primary containment are protected from internally and externally generated missiles by the reinforced concrete structure of the Reactor Building ECCS pump rooms. In addition, the watertight construction of the ECCS pump rooms, when required, protects against mass flooding of redundant ECCS pumps.

Mechanical separation outside the drywell is achieved as follows:

(1) The ECCS shall be separated into three functional groups:

(a) RCIC + 1 RHR + ADS

(b) 1 HPCF + 1 RHR + ADS

(c) 1 HPCF + 1 RHR

(2) The equipment in each group shall be separated from that in the other two groups.

(3) Separation barriers shall be constructed between the functional groups, as required, to assure that environmental disturbances such as fire, pipe rupture, falling objects, etc., affecting one functional group will not affect the remaining groups.

6.3.1.1.4 ECCS Environmental Design Basis

Each ECCS has a safety-related injection/isolation testable check valve located in piping within the drywell, except RCIC and RHR Division A, which connect to feedwater lines outside the drywell. In addition, the RCIC System has an isolation valve in the drywell portion of its steam supply piping. The portions of ECCS piping and equipment located outside the drywell and within the secondary containment are qualified for the environmental conditions defined in Section 3.11.

6.3.1.2 Summary Descriptions of ECCS

The ECCS injection network is comprised of a RCIC System, a HPCF System, and a RHR System. These systems are briefly described here as an introduction to the more detailed system design descriptions provided in Subsection 6.3.2. The ADS, which assists the injection network under certain conditions, is also briefly described.

6.3.1.2.1 High Pressure Core Flooder

The HPCF System pumps water through a flooder sparger mounted above the reactor core. Coolant is supplied over the entire range of system operation pressures. The primary purpose of the HPCF System is to maintain reactor vessel inventory after small breaks which do not depressurize the reactor vessel.

6.3.1.2.2 Residual Heat Removal

The RHR System has three independent loops and delivers water to the core at relatively low reactor pressures. The primary purpose of the RHR System is to provide inventory makeup and core cooling during large breaks and to provide containment cooling. Following ADS initiation, the RHR System provides inventory makeup following a small break.

6.3.1.2.3 Reactor Core Isolation Cooling

The RCIC System injects water into a feedwater line, using a pump driven by a steam turbine. The RCIC steam supply line branches off one of the main steamlines leaving the reactor pressure vessel and goes to the RCIC turbine. Makeup water is supplied from the condensate storage tank (CST) or the wetwell with the preferred source being the CST.

6.3.1.2.4 Automatic Depressurization System

The ADS utilizes a number of the reactor safety/relief valves (SRVs) to reduce reactor pressure during small breaks in the event of HPCF failure. When the vessel pressure is reduced to within the capacity of the low pressure system, these systems provide inventory makeup so that acceptable post-accident temperatures are maintained.

6.3.2 System Design

A more detailed description of the individual systems, including individual design characteristics of the systems, is provided in Subsections 6.3.2.1 through 6.3.2.4.

The following discussion provides details of the combined systems; in particular, those design features and characteristics which are common to all systems.

6.3.2.1 Schematic Piping and Instrumentation Diagrams

The P&IDs for the ECCS are identified in Subsection 6.3.2.2. The process diagrams which identify the various operating modes of each system are also identified in Subsection 6.3.2.2.

6.3.2.2 Equipment and Component Descriptions

The starting signal for the ECCS comes from four independent and redundant sensors of drywell pressure and low reactor water level. The ECCS is actuated automatically and requires no operator action during the first 30 min following the accident. A time sequence for starting of the systems is provided in Table 6.3-2.

Electric power for operation of the ECCS is from regular AC power sources. Upon loss of the regular power, operation is from onsite emergency standby AC power sources. Emergency sources have sufficient capacity so that all ECCS requirements are satisfied. Each of the three ECCS functional groups identified in Subsection 6.3.1.1.3(1) has its own diesel generator emergency power source. Section 8.3 contains a more detailed description of the power supplies for the ECCS.

Regulatory Guide 1.1 prohibits design reliance on pressure and/or temperature transients expected during a LOCA for assuring adequate NPSH. The requirements of this Regulatory Guide are applicable to the HPCF, RCIC and RHR pumps.

The BWR design conservatively assumes 0 kPaG containment pressure and maximum expected temperatures of the pumped fluids. Thus, no reliance is placed on pressure and/or temperature transients to assure adequate NPSH.

Requirements for NPSH are given in Tables 6.2-2c(HPCF), 5.4-1a (RCIC) and 6.2-2b (RHR). Vessel pressure versus system flow curves are given in Figures Figure 6.3-4 (HPCF), Figure 6.3-5 (RCIC) and Figure 6.3-6 (RHR).

The design parameters for the HPCF and RHR System components are provided in Tables Table 6.3-8 and Table 6.3-9, respectively.

6.3.2.2.1 High Pressure Core Flooder (HPCF) System

The HPCF System is composed of two HPCF loops (B and C) flooding water to the RPV above the core. Each of the two loops belongs to a separate division; electrical and mechanical separation between the two divisions is complete. Physical separation is also assured by locating each division in a different area of the Reactor Building. The two loops are both high pressure pumping systems (i.e., they are capable of injecting water into the reactor vessel over the entire operating pressure range). Rated flow at both high and low pressure is the same for each loop. The piping and instrumentation diagram and process diagram are given in Figures Figure 6.3-7 and 6.3-1, respectively.

The reference pressure for the operating performance of the system at high pressure is the lowest spring (safety) setpoint of the SRVs.

Both HPCF divisions take primary suction from the CST and secondary suction from the suppression pool. In the event CST water level falls below a predetermined setpoint or suppression pool water level rises above a predetermined setpoint, the pump suction will automatically transfer from the CST to the suppression pool. Both HPCF System loops have suction lines that are separate from RHR loops.

The HPCF pumps are located at an elevation which is below the water level in the suppression pool. This assures a flooded pump suction. The motor-operated valve in the suction line from the suppression pool on each division is normally closed, since primary suction is taken from the CST. This valve automatically opens on receipt of either of the suction transfer signals noted above. The suppression pool suction valves on each loop are capable of being closed from the control room if a leak develops in the system piping downstream of the isolation valves. Overpressure protection of the pump suction line is provided by a relief valve to the pump minimum flow line.

Each of the two high pressure flooder loops discharges water into the core via a separate flooder sparger. Internal piping connects each sparger to the vessel nozzle.

Each HPCF discharge line to the reactor is provided with two isolation valves in series. One of these valves is a testable check valve located inside the drywell as close as practical to the reactor vessel. HPCF injection flow causes this valve to open during LOCA conditions; thus, no power is required for valve actuation during LOCA. If an HPCF line should break outside the drywell, the check valve in that line inside the drywell will prevent loss of reactor water outside the drywell. The other isolation valve (which is also referred to as a HPCF injection valve) is a motor-operated gate valve located outside the drywell and as close as practical to the HPCF discharge line drywell penetration. This valve is capable of opening with the maximum pressure differential across the valve expected for any system operating mode including HPCF

pump shutoff head. This valve is normally closed as a backup to the inside testable check valve for containment integrity purposes. A vent line is provided between the two valves. A normally open manual isolation valve inside the drywell is provided for HPCF loop maintenance during a plant refueling or maintenance outage.

For each loop, a full flow line is provided with discharge to the suppression pool to allow for full flow test of the system during normal operation. The valves in these lines are closed during normal operation. A full flow test return line is consistent with established BWR practice. There is no Regulatory Guide requiring this feature, but all BWRs have a 100% capacity test return line, and the Chapter 16 Technical Specifications specify periodic full flow system functional tests. There are no specific requirements for testing at runout flow; however, the system does have this capability.

For each loop, a pump minimum flow bypass line is also provided to return water to the suppression pool to prevent pump damage due to overheating when the injection valves on the main discharge lines are closed. The bypass line connects to the main discharge line between the main pump and the discharge check valve. A motor-operated valve on the bypass line automatically closes when sufficient flow in the main discharge line has been established. A flow element in the main discharge line measures system flow rate during LOCA and test conditions and automatically controls the motor-operated valve on the minimum flow bypass line.

The HPCF is designed to operate from normal offsite auxiliary power or from emergency diesel generators if offsite power is not available. If normal auxiliary power is lost, the onsite power source (diesel generator) for that division is started. The onsite power source for any division is capable of carrying all of the division emergency loads, including the HPCF pump and valve motors. Manually operated remote controls for system components (such as HPCF pumps, valves, etc.) and diesel generators are provided in the plant control room.

Full flow functional tests of the HPCF System can be performed during normal plant operation or during plant shutdown by manual operation of the HPCF System from the control room. For testing during normal plant operation, the pump suction is transferred to the suppression pool, the pump is started, and the test discharge line to the suppression pool is opened. A reverse sequence is used to terminate this test. Upon receipt of an automatic initiation signal while in the flow testing mode, the system will automatically return to injection mode and flow will be directed to the reactor vessel.

Appendix 6D outlines the HPCF flow analysis.

6.3.2.2.2 Automatic Depressurization System (ADS)

If the RCIC and HPCF Systems cannot maintain the reactor water level, the ADS, which is independent of any other ECCS, reduces the reactor pressure so that flow from the RHR System

operating in the low pressure flooder mode enters the reactor vessel in time to cool the core and limit fuel cladding temperature.

The ADS employs nuclear system pressure relief valves to relieve high pressure steam to the suppression pool. The design number, location, description, operational characteristics and evaluation of the pressure relief valves are discussed in detail in Subsection 5.2.2. The instrumentation and controls for ADS are discussed in Subsection 7.3.1.1.1.2.

6.3.2.2.3 Reactor Core Isolation Cooling System (RCIC)

The RCIC System consists of a steam-driven turbine which drives a pump assembly. The system also includes piping, valves, and instrumentation necessary to implement several flow paths. The RCIC steam supply line branches off one of the main steamlines (leaving the reactor pressure vessel) and goes to the RCIC turbine with drainage provision to the main condenser. The turbine exhausts to the suppression pool with vacuum breaking protection. Makeup water is supplied from the CST and the suppression pool with the preferred source being the CST. RCIC pump discharge lines include the main discharge line to the feedwater line, a test return line to the suppression pool, a minimum flow bypass line to the pool, and a cooling water supply line to auxiliary equipment. The piping configuration and instrumentation is shown in Figure 5.4-8. The process diagram is given in Figure 5.4-9.

Following the reactor scram, steam generation in the reactor core will continue at a reduced rate due to the core fission product decay heat. The turbine bypass system will divert the steam to the main condenser, and the feedwater system will supply the makeup water required to maintain reactor vessel inventory.

In the event that the reactor vessel is isolated, and the feedwater supply is unavailable, relief valves are provided to automatically (or remote manually) maintain vessel pressure within desirable limits. The water level in the reactor vessel will drop due to continued steam generation by decay heat. Upon reaching a predetermined low level, the RCIC System is initiated automatically. The turbine-driven pump will supply water from the suppression pool or from the CST to the reactor vessel. The turbine will be driven with a portion of the decay heat steam from the reactor vessel, and will exhaust to the suppression pool.

In the event that there is a LOCA, the RCIC System, in conjunction with the two HPCF Systems, is designed to pump water into the vessel while it is fully pressurized. This combination of systems will provide adequate core cooling until vessel pressure drops to the point at which the Low Pressure Flooder (LPFL) Subsystems of the RHR System can be placed in operation.

During RCIC operation, the suppression pool acts as the heat sink for steam generated by reactor decay heat. This will result in a rise in pool water temperature. Heat exchangers in the RHR System are used to maintain pool water temperature within acceptable limits by cooling the pool water directly during normal plant operation.

A design flow functional test of the RCIC System may be performed during normal plant operation by drawing suction from the suppression pool and discharging through a full flow test return line back to the suppression pool. The discharge valve to the vessel remains closed during the test, and reactor operation remains undisturbed. Should an initiation signal occur during test mode operation, flow will be automatically directed to the vessel. All components of the RCIC System are capable of individual functional testing during normal plant operation.

6.3.2.2.4 Residual Heat Removal System (RHR)

The RHR System is a closed system consisting of three independent pump loops which inject water into the vessel and/or remove heat from the reactor core or containment. Each of the pump loops contains the necessary piping, pumps valves, and heat exchangers. The piping and instrumentation diagram and process diagram are given in Figures 5.4-10 and 5.4-11, respectively. In the core cooling mode, each loop draws water from the suppression pool and injects the water into the vessel outside the core shroud (via the feedwater line on one loop and via the core cooling subsystem discharge return line on two loops). In the heat removal mode, pump suction may be taken either from the suppression pool or the reactor pressure vessel. With the pump suction being taken from the suppression pool, the pump discharge within these loops provides a flow path to the following points:

(1) Suppression pool

(2) Reactor pressure vessel (via feedwater on one loop and via the core cooling subsystem return lines on the other two loops)

(3) Wetwell and drywell spray spargers (on two loops only)

In the shutdown cooling mode, with the pump suction being taken from the reactor pressure vessel (via the shutdown cooling lines), the pump discharge within these loops provides a flow path back to the reactor vessel via the core cooling discharge return lines, and feedwater line, or to the upper reactor well via the fuel cooling system (on two loops only).

With the pump suction being taken from the skimmer surge tanks of the fuel pool cooling system, the pump discharge is returned to the fuel pool on two loops only.

Each loop is in a single quadrant of the Reactor Building and receives its electric power from a bus separate from those serving the other two loops. Each bus is supplied from both onsite and offsite power sources.

For each loop, a full flow line is provided with discharge to the suppression pool to allow for full flow test of the system during normal operation. The valves in these lines are closed during normal operation.

For each loop, a minimum flow bypass line is also provided to return water to the suppression pool to prevent pump damage due to overheating when the injection valves on the main

discharge lines are closed. The bypass line connects to the main discharge lines between the main pump and the discharge check valve. A motor-operated valve on the bypass line automatically closes when flow in the main discharge line is sufficient to provide the required pump cooling. A flow element in the main discharge line measures system flow rate during LOCA and test conditions and automatically controls the motor-operated valve on the bypass lines. The motor-operated valve does not receive automatic signals unless the associate pump indicates a high discharge pressure.

Each loop contains instruments necessary to maintain a ready condition, to evaluate loop performance, and to operate the minimum flow valve.

Each RHR pump discharge line is maintained in a filled condition to minimize the time lag between a starting signal and initiation of flow into the reactor vessel and to minimize momentum forces associated with accelerating fluid into an empty pipe.

Each division is provided with a discharge line fill pump, which takes suction from the suppression pool suction line. A check valve is located in the discharge line at an elevation lower than the suppression pool minimum water level line to prevent backflow from emptying the lines into the suppression pool.

Full flow functional tests of the RHR System can be performed during normal plant operation or during plant shutdown by manual operation of the RHR System from the control room. For plant testing during normal plant operation, the pump is started and the return line to the suppression pool is opened. A reverse sequence is used to terminate this test. Upon receipt of an automatic initiation signal while in the flow testing mode, the system is returned to automatic control.

6.3.2.2.5 ECCS Discharge Line Fill System

A requirement of the core cooling systems is that cooling water flow to the reactor vessel be initiated rapidly when the system is called on to perform its function. This quick-start system characteristic is provided by quick-opening valves, quick-start pumps, and standby AC power source. The lag between the signal to start the pump and the initiation of flow into the RPV can be minimized by keeping the core cooling pump discharge lines full. Additionally, if these lines were empty when the systems were called for, the large momentum forces associated with accelerating fluid into a dry pipe could cause physical damage to the piping. Therefore, the ECCS discharge line fill system is designed to maintain the pump discharge lines in a filled condition.

Since the ECCS discharge lines are elevated above the suppression pool, check or stop-check valves are provided near the pumps to prevent back flow from emptying the lines into the suppression pool. Past experience has shown that these valves will leak slightly, producing a small back flow that will eventually empty the discharge piping. To ensure that this leakage from the discharge lines is replaced and the lines are always kept filled, a water leg pump is

provided for each of the three RHR loops. The power supply to these pumps is classified as essential when the main ECCS pumps are deactivated. Indication is provided in the control room as to whether these pumps are operating, and alarms indicate low discharge line level. The RCIC loop and the two HPCF loops are maintained full by connection to the makeup water (condensate).

6.3.2.3 Applicable Codes and Classifications

The applicable codes and classification of the ECCS are specified in Section 3.2. The edition of the codes applicable to the design are provided in Table 1.8-21. The piping and components of each ECCS within containment and out to and including the pressure retaining injection valve are Safety Class 1. The remaining piping and components are Safety Class 2, 3, or noncode, as indicated in Section 3.2 and on the individual system P&ID. The equipment and piping of the ECCS are designed to the requirements of Seismic Category I. This seismic designation applies to all structures and equipment essential to the core cooling function. IEEE codes applicable to the controls and power supply are specified in Section 7.1.

6.3.2.4 Materials Specifications and Compatibility

Materials specifications and compatibility for the ECCS are presented in Section 6.1. Nonmetallic materials such as lubricants, seals, packings, paints and primers, insulation, as well as metallic materials, etc., are selected as a result of an engineering review and evaluation for compatibility with other materials in the system and the surroundings with concern for chemical, radiolytic, mechanical and nuclear effects. Materials used are reviewed and evaluated with regard to radiolytic and pyrolytic decomposition and attendant effects on safe operation of the ECCS.

6.3.2.5 System Reliability

A single-failure analysis shows that no single failure prevents the starting of the ECCS, when required, or the delivery of coolant to the reactor vessel. No individual system of the ECCS is single-failure proof with the exception of the ADS; hence, it is expected that single failures will disable individual systems of the ECCS. The most severe effects of single failures with respect to loss of equipment occur if the LOCA occurs in combination with an ECCS pipe break coincident with a loss of offsite power. The consequences of the most severe single failures are shown in Table 6.3-3.

6.3.2.6 Protection Provisions

Protection provisions are included in the design of the ECCS. Protection is afforded against missiles, pipe whip and flooding. Also accounted for in the design are thermal stresses, loadings from a LOCA, and seismic effects.

The ECCS piping and components located outside the drywell are protected from internally and externally generated missiles by the reinforced concrete structure of the ECCS pump rooms.

The watertight construction of these ECCS pump rooms also protects the equipment against flooding.

The ECCS is protected against the effects of pipe whip, which might result from piping failures up to and including the design basis event LOCA. This protection is provided by separation, pipe whip restraints, and energy absorbing materials. One of these three methods is applied to provide protection against damage to piping and components of the ECCS which otherwise could result in a reduction of ECCS effectiveness to an unacceptable level (see Section 3.6 for criteria on pipe whip).

The component supports which protect against damage from movement and from seismic events are discussed in Subsection 5.4.14. The methods used to provide assurance that thermal stresses do not cause damage to the ECCS are described in Subsection 3.9.3.

6.3.2.7 Provisions for Performance Testing

Periodic system and component testing provisions for the ECCS are described in Subsection 6.3.2.2 as part of the individual system description.

6.3.2.8 Manual Actions

The ECCS is actuated automatically and requires no operator action during the first 30 min following the accident, although operator action is not prevented. During the long-term cooling period (after 10 min), containment cooling occurs as a normal consequence of RHR LPFL operation because the RHR heat exchangers are in series with the pumps. Although not prevented from doing so earlier, the operator is not required to select another RHR mode, such as suppression pool cooling, until after the 30 minutes.

The operator has multiple instrumentation available in the control room to assist him in assessing the post-LOCA conditions. This instrumentation provides reactor vessel pressures, water levels, containment pressure, temperature and radiation levels, as well as indicating the operation of the ECCS. ECCS flow indication is the primary parameter available to assess proper operation of the system. Other indications, such as position of valves, status of circuit breakers, and essential power bus voltage, are available to assist him in determining system operating status. The electrical and instrumentation complement to the ECCS is discussed in detail in Section 7.3. Other available instrumentation is listed in the P&IDs for the individual systems. Much of the monitoring instrumentation available to the operator is discussed in more detail in Chapter 5 and Section 6.2.

6.3.3 ECCS Performance Evaluation

Performance of the ECCS is determined by evaluating the system response to an instantaneous break of a pipe. This evaluation is performed using models either approved by the USNRC or which have met the change criteria in 10CFR50.46.

The analyses included in this subsection demonstrate the ABWR ECCS performance for the entire spectrum of postulated break sizes. The analyses are based upon the core loading shown in Figure 4.3-1 and were performed with the NRC-approved LAMB/SCAT and SAFER/GESTR models. Plants with different core loadings, including those with some blank fuel bundles similar to that shown in Figure 4.3-2, will show the same system sensitivities. The MAPLHGR, peak cladding temperature (PCT) and oxidation fraction results will be provided for the limiting break (for each bundle design) and this meets the criteria documented in Appendix 4B. These results will be provided by the COL applicant to the USNRC for information. See Subsection 6.3.6.1 for COL license information.

The accidents, as listed in Chapter 15, for which ECCS operation is required are:

Subsection	Title
15.2.8	Feedwater Line Break
15.6.4	Spectrum of BWR Steam System Piping Failures Outside Containment
15.6.5	Loss-of-Coolant Accidents

Chapter 15 provides the radiological consequences of the above listed events for the core loading in Figure 4.3-1.

6.3.3.1 ECCS Bases for Technical Specifications

The MAPLHGRs calculated in this performance analysis provide the basis for the Chapter 16 Technical Specifications designed to ensure conformance with the acceptance criteria of 10CFR50.46. Minimum ECCS functional requirements are specified in Subsections 6.3.3.4 and 6.3.3.5, and testing requirements are discussed in Subsection 6.3.4. Limits on minimum suppression pool water level are discussed in Section 6.2.

6.3.3.2 Acceptance Criteria for ECCS Performance

The applicable acceptance criteria, extracted from 10CFR50.46 are listed, and, for each criterion, applicable parts of Subsection 6.3.3 (where conformance is demonstrated) are indicated.

Criterion 1: Peak Cladding Temperature (PCT)

"The calculated maximum fuel element cladding temperature shall not exceed 2200°F." Conformance to Criterion 1 (≤1204°C) is shown for the system response analyses in Subsections 6.3.3.7.3 (Break Spectrum), 6.3.3.7.4 (Large Breaks), 6.3.3.7.5 (Intermediate Breaks), 6.3.3.7.6 (Small Breaks), 6.3.3.7.7 (Outside Containment Breaks), 6.3.3.7.8 (upper 95% Probability PCT) and specifically in Table 6.3-4 (Summary of LOCA Analysis Results). Conformance for each plant will be assured for the limiting break. See Subsection 6.3.6 for COL license information.

Criterion 2: Maximum Cladding Oxidation
"The calculated total local oxidation of the cladding shall nowhere exceed 0.17 times the total cladding thickness before oxidation." Conformance to Criterion 2 is shown in Figure 6.3-10 (Break Spectrum) and Table 6.3-4 (Summary of LOCA Analysis Results) for the system response analysis. This limit will be assured for the limiting break. See Subsection 6.3.6 for COL license information.

Criterion 3: Maximum Hydrogen Generation
"The calculated total amount of hydrogen generated from the chemical reaction of the cladding with water or steam shall not exceed 0.01 times the hypothetical amount that would be generated if all the metal in the cladding cylinder surrounding the fuel, excluding the cladding surrounding the plenum volume, were to react." Conformance to Criterion 3 is shown in Table 6.3-4 (Summary of LOCA Analysis Results) for the system analysis.

Criterion 4: Coolable Geometry
"Calculated changes in core geometry shall be such that the core remains amenable to cooling." As described in Reference 6.2-1, Section III.A, conformance to Criterion 4 is demonstrated by conformance to Criteria 1 and 2.

Criterion 5: Long-Term Cooling
"After any calculated successful initial operation of the ECCS, the calculated core temperature shall be maintained at an acceptably low value and decay heat shall be removed for the extended period of time required by the long-lived radioactivity remaining in the core." Conformance to Criterion 5 is demonstrated generically for GEH BWRs in Reference 6.2-1, Section III.A. Briefly summarized, for any LOCA, the water level can be restored to a level above the top of the core and maintained there indefinitely.

6.3.3.3 Single-Failure Considerations

The functional consequences of potential operator errors and single failures (including those which might cause any manually controlled electrically operated valve in the ECCS to move to a position which could adversely affect the ECCS) and the potential for submergence of valve motors in the ECCS are discussed in Subsection 6.3.2. There it was shown that all potential single failures are no more severe than one of the single failures identified in Table 6.3-3.

It is therefore only necessary to consider each of these single failures in the ECCS performance analyses. The worst failure for any LOCA event is the failure of one of the diesel generators which provide electrical power to one HPCF and one RHR/LPFL. This failure results in the elimination of the greatest amount of flooding capability at both high and low reactor pressures.

6.3.3.4 System Performance During the Accident

In general, the system response to an accident can be described as:

(1) Receiving an initiation signal

(2) A small lag time (to open all valves and have the pumps up to rated speed)

(3) The ECCS flow entering the vessel

Key ECCS actuation setpoints and time delays for all the ECCS systems are provided in Table 6.3-1. The minimization of the delay from the receipt of signal until the ECCS pumps have reached rated speed is limited by the physical constraints on accelerating the diesel-generators and pumps. The delay time due to valve motion in the case of the high pressure system provides a suitably conservative allowance for valves available for this application. In the case of the low pressure system, the time delay for valve motion is such that the pumps are at rated speed prior to the time the vessel pressure reaches the pump shutoff pressure.

The ADS actuation logic includes a 29-second delay timer to confirm the presence of Low Water Level 1 (LWL 1) initiation signal. This timer is initiated upon receipt of a high drywell pressure signal (which is sealed-in) and a LWL 1 signal. The timer setting is consistent with the startup time of the ECCS which also must be running before ADS operation can occur. Once the ADS timer is initiated, it is automatically reset if the reactor water level is restored above the LWL 1 setpoint before ADS operation occurs. For defense-in-depth protection against inventory decreasing events where a high drywell pressure is not present, the ADS actuation logic also includes an 8-minute high drywell bypass timer. This timer is initiated upon receipt of a LWL 1 signal and is automatically reset if the reactor water level is restored above the LWL 1. After this timer runs out, the need for a high drywell pressure signal to initiate the ADS 29-second delay timer is bypassed (i.e., the 29-second delay timer would require only a LWL 1 signal to initiate). The ADS control system also provides the operator with an ADS inhibit switch which can be used to prevent automatic ADS operation as covered by the engineering operating procedures (refer to Subsection 7.3).

The flow delivery rates analyzed in Subsection 6.3.3 can be determined from the vessel pressure versus system flow curves in Figures Figure 6.3-4, Figure 6.3-5 and Figure 6.3-6 and the pressure versus time plots discussed in Subsection 6.3.3.7. Simplified piping and instrumentation and process diagrams for the ECCS are referenced in Subsection 6.3.2. The operational sequence of ECCS for the limiting case is shown in Table 6.3-2.

Operator action is not required, except as a monitoring function, during the short-term cooling period following the LOCA. During the long-term cooling period, the operator may need to take action as specified in Subsection 6.2.2.2 to place the containment cooling system into operation for some LOCA events.

6.3.3.5 Use of Dual Function Components for ECCS

With the exception of the LPFL systems, the systems of the ECCS are designed to accomplish only one function: to cool the reactor core following a loss of reactor coolant. To this extent, components or portions of these systems (except for pressure relief) are not required for operation of other systems which have emergency core cooling functions, or vice versa.

Because either the ADS initiating signal or the overpressure signal opens the safety-relief valve, no conflict exists.

The LPFL Subsystem is configured from the RHR pumps and some of the RHR valves and piping. When the reactor water level is low, the LPFL Subsystem (line up) has priority through the valve control logic over the other RHR Subsystems for containment cooling. Immediately following a LOCA, the RHR System is directed to the LPFL mode. When the RHR shutdown cooling mode is utilized, the transfer to the LPFL mode must be remote manually initiated.

6.3.3.6 Limits on ECCS Parameters

Limits on ECCS parameters are given in the sections and tables referenced in Subsections 6.3.3.1 and 6.3.3.7.1. Any number of components in any given system may be out of service, up to the entire system. The maximum allowable out-of-service time is a function of the level of redundancy and the specified test intervals.

6.3.3.7 ECCS Analyses for LOCA

6.3.3.7.1 LOCA Analysis Procedures and Input Variables

The methods used in the analysis have been approved by the NRC or meet the change criterion in 10CFR50.46. For the system response analysis, the LAMB/SCAT and SAFER/GESTR models approved by the NRC were used. The significant input variables used for the response analysis are listed in Table 6.3-1 and Figure Figure 6.3-44.

6.3.3.7.2 Accident Description

The operation sequence of events for the limiting case is shown in Table 6.3-2.

6.3.3.7.3 Break Spectrum Calculations

A complete spectrum of postulated break sizes and locations were evaluated to demonstrate ECCS performance. For ease of reference, a summary of figures presented in Subsection 6.3.3.7 is shown in Table 6.3-5.

A summary of results of the break spectrum calculations is shown in tabular form in Table 6.3-4 and graphically in Figure 6.3-10. Conformance to the acceptance criteria (PCT= 1204°C, local oxidation = 17% and core-wide metal-water reaction = 1%) is demonstrated for the core loading in Figure 4.3-1. Results for the limiting break for each bundle design in a plant will be given for information to the USNRC by the COL applicant. See Subsection 6.3.6.3 for COL license information. Details of calculations for specific breaks are included in subsequent paragraphs.

6.3.3.7.4 Large Line Breaks Inside Containment

Since the ABWR design has no recirculation lines, the maximum steamline break (985 cm^2), maximum feedwater lines break (839 cm^2), and the maximum RHR shutdown suction line

break (792 cm^2) become the large break cases. Important output variables from the sensitivity study of these events are shown in Figures 6.3-12 through 6.3-36.

These variables are:

(1) Core flow as a function of time

(2) Minimum critical power ratio as a function of time

(3) Water level in the fuel channels as a function of time

(4) Water level inside the shroud as a function of time

(5) Water level outside the shroud as a function of time

(6) Vessel pressure as a function of time

(7) Flows out of the vessel as a function of time

(8) Flows into the vessel as a function of time

(9) Peak cladding temperature as a function of time

A conservative assumption made in the analysis is that all offsite AC power is lost simultaneously with the initiation of the LOCA. As a further conservatism, all reactor internal pumps were assumed to trip at the start of LOCA event even though this, in itself, is considered to be an accident (Subsection 15.3.1). The resulting rapid core flow coastdown produces a calculated departure from nucleate boiling in the hot bundles within the first few seconds of the transient.

LOCA analyses using break areas less than the maximum values were also considered for the steamline, feedwater line, and RHR shutdown suction line locations. The cases analyzed are indicated on the break spectrum plot (Figure 6.3-10). In general, the largest break at each location is the worst in terms of minimum transient water level in the downcomer.

6.3.3.7.5 Intermediate Line Breaks Inside Containment

For this case, the maximum RHR/LPFL injection line break (205 cm^2) was analyzed. Since the bottom head drain line ties into the RHR shutdown suction line, the total break flow for the maximum RHR shutdown suction line break includes flow from the vessel through RHR shutdown suction vessel nozzle, as well as through the bottom head drain line. Important variables from this analysis are shown in Figures 6.3-37 through 6.3-43.

6.3.3.7.6 Small Line Breaks Inside Containment

For these cases, the maximum high pressure core flooder line break (92 cm^2) and the maximum bottom head drain line break (20.3 cm^2), based on a 5.08 cm penetration in the vessel bottom

head were analyzed. Since the bottom head drain line ties into the RHR shutdown suction line, the total break flow for the maximum bottom head drain line break includes flow from the vessel through the bottom head drain line penetration as well as through the RHR shutdown suction line. Important variables from these analyses are shown in Figures 6.3-44 through 6.3-59.

A break in a reactor internal pump would involve either the welds or the casing. If the weld from the pump casing to the PRV stub tube breaks, the stretch tube will prevent the pump casing from moving. The stretch tube clamps the diffuser to the pump casing, where its nut seats. The land is located below the casing attachment weld and therefore the stretch tube forms a redundant parallel strength path to the pump casing restraint which is designed to provide support in the event of weld failure. In case the pump casing and the stretch tube break, the pump and motor will move downward until stopped by the casing restraints. The pump is part of the stretch tube. In either case, the break flow would be much less than the drain line break case. Therefore, the drainline break analysis is also bounding for any credible break within the reactor internal pump recirculation system and its associated motor housing and cover.

As expected, the core flooder line break is the worst break location in terms of minimum transient water level in the downcomer. In elevation it is the lowest break on the vessel except for the drainline break. Furthermore, the worst break/failure combination leaves the fewest number of ECC systems remaining and no high pressure core flooder systems. LOCA analyses using break areas less than the maximum values were also considered. The cases analyzed are indicated on the break spectrum plot (refer to Figure 6.3-10). From these results, it is clear that the overall most limiting break in terms of minimum transient water level in the downcomer, is the maximum core flooder line break case.

6.3.3.7.7 Line Breaks Outside Containment

This group of breaks is characterized by a rapid isolation of the break. Since a main steamline break outside the containment produces more vessel inventory loss before isolation than other breaks in this category, the results of this case are bounding for all breaks in this group. Important variables from these analyses are shown in Figures 6.3-60 through 6.3-66.

As discussed in Subsection 6.3.3.7.4, the trip of all reactor internal pumps at the start of the LOCA produces a calculated departure from nucleate boiling for all LOCA events. Furthermore, the high void content in the bundles following a large steamline break produces the earliest times of loss of nucleate boiling for any LOCA event. Thus, the summary of results in Table 6.3-4 shows that, though the PCTs for all break locations are similar, the steamline breaks result in higher calculated PCTs and the outside steamline break is the overall most limiting case in terms of the highest calculated PCT. Results of the analysis of this break will be provided for each bundle design for information by the COL applicant.

6.3.3.7.8 Bounding Peak Cladding Temperature Calculations

Consistent with the SAFER application methodology in Reference 6.3-1, the Appendix K peak cladding temperatures calculated in the previous sections must be compared to a statistically calculated 95% probability value. Table 6.3-6 presents the significant plant variables which were considered in the determination of the 95% probability PCT or the sensitivity study. Again, since the ABWR LOCA results have a large margin to the acceptance criteria, a conservative PCT calculation was performed which bounds the 95% probability PCT. This bounding PCT was calculated by varying all plant variables in the conservative direction simultaneously. The results of this calculation for the limiting case are given in Figures 6.3-67 through 6.3-75 and Table 6.3-4. Since the ABWR results have large margins to the l0CFR50.46 licensing acceptance criteria, the ABWR licensing PCT can be based on the bounding PCT which is well below the 1204°C PCT limit.

6.3.3.8 LOCA Analysis Conclusions

Having shown compliance with the applicable acceptance criteria of Subsection 6.3.3.2, it is concluded that the ECCS will perform its function in an acceptable manner and meet all of the criteria in Appendix 4B, given operation at or below the MAPLHGRs provided by the COL applicant for each fuel bundle (Subsection 6.3.6).

6.3.3.9 LOCA Analyses to Support ECCS Technical Specifications for Allowable Outage Times

Core cooling LOCA analyses covering the complete spectrum of postulated breaks were performed with only one RHR system in the low pressure flooder (LPFL) mode and 5 ADS valves available. These calculations are also bounding for the case with one HPCF subsystem and 5 ADS valves available since, compared to the RHR/LPFL, the HPCF has the additional capability to inject at high reactor system pressures.

For these analyses the Appendix K LOCA evaluation assumptions and models were used consistent with the LOCA analyses presented in Subsection 6.3.3.7, with one exception. This exception is the availability of only 1 RHR/LPFL and 5 ADS valves which goes beyond the single failure criteria and represents multiple failures or systems out of service. The results of these analyses are shown in Figure 6.3-76. The limiting case is the maximum bottom head drainline break with peak cladding temperature of 984.4°C which is well below the 1204°C licensing limit. The results of this case are shown in Figures 6.3-77 through 6.3-79.

For the limiting case (i.e., the maximum bottom head drainline break) a bounding calculation was also performed using the assumptions and models consistent with the bounding analyses presented in Subsection 6.3.3.7.8. The resulting peak cladding temperature was 820°C. From these analyses it is concluded that for any postulated break if 1 RHR/LPFL + 5 ADS or 1 HPCF + 5 ADS are available then core cooling is assured.

Tables 6.3-10 through 6.3-15 provide the emergency core cooling systems remaining assuming various combinations of single failures and systems out of service. These tables show that there will be a minimum of 1 RHR/LPFL + 5ADS or 1 HPCF + 5 ADS available for the combinations of single failures and systems out of service considered with one exception. This exception is when ECCS Division B (or C) is out of service (refer to Tables 6.3-13 and 6.3-14) and, assuming loss of offsite power, emergency diesel generator C (or B) fails to start with a break in the RHR/LPFL(A) injection line. Since this is a unique set of circumstances the allowable outage time for ECCS Divisions B and C should not be affected.

6.3.3.10 Severe Accident Considerations

In the unlikely event that the ECCS does not prevent core damage, its operation (recovery if necessary) can be beneficial in mitigating the consequences of core damage. The analysis of core damage events was performed using best-estimate methods rather than design basis codes such as SAFER/GESTR.

The primary injection path for the RHR System during a severe accident is into the vessel via the LPFL header. The conditions under which the LPFL should be used are described in the Appendix 18A, Emergency Procedure Guidelines. For injection to occur, the RPV must be at low pressure.

If the LPFL is not initiated in time to prevent core damage by enhancing cooling and preventing radioactive heating from the core debris. If injection is initiated prior to vessel failure, melt progression may be arrested in-vessel. However, if vessel failure occurs, debris will relocate from the vessel breach into the lower drywell. Water flowing into the lower drywell will cover the core debris and enhance debris cooling.

6.3.4 Tests and Inspections

6.3.4.1 ECCS Performance Tests

All systems of the ECCS are tested for their operational ECCS function during the preoperational and/or startup test program. Each component is tested for power source, range, direction of rotation, setpoint, limit switch setting, torque switch setting, etc. Each pump is tested for flow capacity for comparison with vendor data. (This test is also used to verify flow measuring capability). The flow tests involve the same suction and discharge source (i.e., suppression pool).

All logic elements are tested individually and then as a system to verify complete system response to emergency signals including the ability of valves to revert to the ECCS alignment from other positions.

Finally, the entire system is tested for response time and flow capacity taking suction from its normal source and delivering flow into the reactor vessel. This last series of tests is performed with power supplied from both offsite power and onsite emergency power.

See Chapter 14 for a thorough discussion of preoperational testing for these systems. See Subsection 6.3.6.2 for COL license information regarding ECCS testing requirements.

6.3.4.2 Reliability Tests and Inspections

The average reliability of a standby (nonoperating) safety system is a function of the duration of the interval between periodic functional tests. The factors considered in determining the periodic test interval of the ECCS are:

(1) The desired system availability (average reliability)

(2) The number of redundant functional system success paths

(3) The failure rates of the individual components in the system

(4) The schedule of periodic tests (simultaneous versus uniformly staggered versus randomly staggered)

All of the active components of the HPCF, ADS, RHR and RCIC Systems are designed so that they may be tested during normal plant operation. Full flow test capability is provided by a test line back to the suction source. The full flow test is used to verify the capacity of each ECCS pump loop while the plant remains undisturbed in the power generation mode. In addition, each individual valve may be tested during normal plant operation.

All of the active components of the ADS System, except the SRVs and their associated solenoid valves, are designed so that they may be tested during normal plant operation. The SRVs and associated solenoid valves are all tested during plant initial power ascension per Regulatory Guide 1.68, Appendix A. SRVs are bench tested to establish lift settings.

Testing of the initiating instrumentation and controls portion of the ECCS is discussed in Subsection 7.3.1. The emergency power system, which supplies electrical power to the ECCS in the event that offsite power is unavailable, is tested as described in Subsection 8.3.1. The frequency of testing is specified in the Chapter 16 Technical Specifications. Visual inspections of all the ECCS components located outside the drywell can be made at any time during power operation. Components inside the drywell can be visually inspected only during periods of access to the drywell. When the reactor vessel is open, the spargers and other internals can be inspected.

6.3.4.2.1 HPCF Testing

The HPCF System can be tested at full flow with suppression pool water at any time during plant operation except when a system initiation signal is present. If an initiation signal occurs while the HPCF is being tested, the system returns automatically to the operating mode. The motor-operated valve in the suction line from the condensate storage tank is interlocked closed when the suction valve from the suppression pool is open.

A design flow functional test of the HPCF System over the operating pressure and flow range is performed by pumping water from the suppression pool through the full flow test return line and back to the suppression pool.

The suction valve from the condensate storage tank and the discharge valve to the reactor remain closed. These two valves are tested separately to ensure their operability.

The HPCF test conditions are tabulated on the HPCF process flow diagram (Figure 1). Appendix 6D provides test and analysis outlines.

6.3.4.2.2 ADS Testing

An ADS logic system functional test and simulated automatic operation of all ADS logic channels are to be performed at least once per plant operating interval between reactor refuelings. Instrumentation channels are demonstrated operable by the performance of a channel functional test and a trip unit calibration at least once per month and a transmitter calibration at least once per operating interval.

All SRVs, which include those used for ADS, are bench tested to establish lift settings in compliance with ASME Code Section XI.

6.3.4.2.3 RHR Testing

The RHR pump and valves are tested periodically during reactor operation. With the injection valves closed and the return line open to the suppression pool, full flowing pump capability is demonstrated. The injection valve and the check valve are tested in a manner similar to that used for the HPCF valves. The system test conditions during reactor operation are shown on the RHR System process diagram (Figure 5.4-11).

6.3.4.2.4 RCIC Testing

The RCIC loop can be tested during reactor operation. To test the RCIC pump at rated flow, the test bypass line valve to the suppression pool and the pump suction valve from the suppression pool are opened and the pump is started using the turbine controls in the control room. Correct operation is determined by observing the instruments in the control room.

If an initiation signal occurs during the test, the RCIC System returns to the operating mode. The valves in the test bypass lines are closed automatically and the RCIC pump discharge valve is opened to assure flow is correctly routed to the vessel.

6.3.5 Instrumentation Requirements

Design details including redundancy and logic of the ECCS instrumentation are discussed in Section 7.3.

All instrumentation required for automatic and manual initiation of the HPCF, RCIC, RHR and ADS Systems is discussed in Subsection 7.3.1, and is designed to meet the requirements of IEEE-279 and other applicable regulatory requirements. The HPCF, RCIC, RHR and ADS Systems can be manually initiated from the control room.

The RCIC, HPCF, and RHR Systems are automatically initiated on low reactor water level or high drywell pressure. The ADS is automatically actuated by sensed variables for reactor vessel low water level and drywell high pressure plus indication that at least one RHR or HPCF pump is operating. The HPCF, RCIC, and RHR Systems automatically return from system flow test modes to the emergency core cooling mode of operation following receipt of an automatic initiation signal. The RHR LPFL mode injection into the RPV begins when reactor pressure decreases to the RHR's pump discharge shutoff pressure.

HPCF injection begins as soon as the HPCF pump is up to speed and the injection valve is open, since the HPCF System is capable of injection water into the RPV over a pressure range from 8.12 to 0.69 MPaD or pressure difference between the vessel and drywell.

6.3.6 COL License Information

6.3.6.1 ECCS Performance Results

The exposure-dependent MAPLHGR, peak cladding temperature, and oxidation fraction for each fuel bundle design based on the limiting break size will be provided by the COL applicant to the USNRC for information (Subsection 6.3.3).

6.3.6.2 ECCS Testing Requirements

In accordance with the Technical Specifications, the COL applicant will perform a test every refueling in which each ECCS subsystem is actuated through the emergency operating sequence (Subsection 6.3.4.1).

6.3.6.3 Limiting Break Results

Results for the limiting break for each bundle design will be provided to the USNRC by the COL applicant (Subsection 6.3.3.7.3).

6.3.7 Reference

6.3-1 "General Electric Company Analytical Model for Loss-of-Coolant Analysis in Accordance with 10CFR50, Appendix K", (NEDE-20566-P-A), September 1986.

Table 6.3-1 Significant Input Variables Used in the Loss-of-Coolant Accident Analysis

Variable	Units	Value
A. Plant Parameters		
Core Thermal Power	MWt	4005
Vessel Steam Output	kg/h	7.82×10^6
Corresponding Percentage of Rated Steam Flow	%	102.4
Vessel Steam Dome Pressure	MPaA	7.28
B. Emergency Core Cooling Systems Parameters		
B.1 Low Pressure Flooder System		
Vessel Pressure at which Flow may Commence	MPaD (vessel to drywell)	1.55
Minimum Rated Flow per system at Vessel Pressure	m^3/h MPaD (vessel to drywell)	954 0.275
Initiating signals Low Water Level	cm above TAF	≤15.3
or High Drywell Pressure	MPaG	≥0.014
Maximum Allowable Time Delay from Initiating Signal to Pumps at Rated Speed	s	29.0
Maximum Allowable Time Delay from Low Pressure Permissive Signal to Injection Valve Fully Open	s	36.0
B.2 Reactor Core Isolation Cooling System		
Vessel Pressure at which flow may commence	MPaD (vessel to pump suction)	8.12
Minimum Rated Flow at Vessel Pressure	m^3/h MPaD (vessel to the air space of the compartment containing the water source for the pump suction)	182 1.035 to 8.12
Initiating signals Low Water Level	cm above TAF	≤243.4
or High Drywell Pressure	MPaG	Š0.014
Maximum Allowable Time Delay from Initiating Signal to Rated Flow Available and Injection Valve Fully Open	s	29.0

Table 6.3-1 Significant Input Variables Used in the Loss-of-Coolant Accident Analysis (Continued)

Variable	Units	Value
B.3 High Pressure Core Flooder System		
Vessel Pressure at which Flow May Commence	MPaD	8.12
Minimum Rated Flow per System Available at Vessel Pressure	m^3/h MPaD (vessel to the air space of the compartment containing the water source for the pump suction)	182 to 727 0.69 to 8.12
Initiating Signals	cm above TAF	≤98.7
Low Water Level or High Drywell Pressure	MPaD	≥0.014
Maximum Allowed Delay Time Initiating Signal to Entering the Reactor Vessel Consistent with Figure 6.3-4	s	36.0
B.4 Automatic Depressurization System		
Total Number of Relief Valves with ADS Function		8
Total Minimum Flow Capacity	kg/h	2.903×10^6
At Vessel Pressure	MPaG	7.76
Initiating Signals Low Water Level and High Drywell Pressure or High Drywell Pressure Bypass Timer Timed Out	 cm above TAF MPaG s	 ≤15.3 ≥0.014 ≤480
Delay Time from All Initiating Signals Completed to the Time Valves are Open	s	≤29
C. Fuel Parameters*		
Fuel Type	-------	Initial Core
Fuel Bundle Geometry	-------	8x8
Lattice	-------	C
Number of Fueled Rods per Bundle	-------	62
Peak Technical Specification Linear Heat Generation Rate	kW/m	44.0
Initial Minimum Critical Power Ratio	-------	1.13
Design Axial Peaking Factor	-------	1.40

* The system response analysis is based upon the core loading in Figure 4.3-1. The sensitivities demonstrated are valid for other core loadings.

Table 6.3-2 Operational Sequence of Emergency Core Cooling System Maximum Core Flooder Line Break

Time (sec)	Events
0	Design basis LOCA assumed to start; normal auxiliary power assumed to be lost.*
~5	Reactor Low Water Level 3 is reached. Reactor scram occurs.
~10	Drywell high pressure is reached. All diesel-generators, RCIC, HPCF, RHR/LPFL signaled to start. †
~18	Reactor Low Water Level 2 is reached. RCIC System receives second signal to start.
~48	RCIC injection valve open and pump at design flow which completes RCIC startup.
~65	Reactor Low Water Level 1.5 is reached. All diesel-generators and HPCF receive second signal to start. Main steam isolation valves signaled to close.
~78	All diesel-generators ready to load; RHR/LPFL and HPCF loading sequence begins.
~102	HPCF injection valves open and pumps at design flow, which completes HPCF startup.
~118	Reactor Low Water Level 1 is reached. RHR/LPFL receives second signal to start. ADS delay timer initiated.
~148	ADS delay timer timed out. ADS valves actuated.
~344	Vessel pressure decreases below shutoff head of RHR/LPFL. RHR/LPFL injection valves open and flow into vessel begins.
See Figure 6.3-46	Core effectively reflooded assuming worst single failure; heatup terminated.

* For the purpose of all but the next to last entry on this table, all ECCS equipment is assumed to function as designed. Performance analysis calculations consider the effects of single equipment failures (Subsection 6.3.3.3).

† For the LOCA analysis, the ECCS initiation on high drywell pressure is not considered.

Table 6.3-3 Single Failure Evaluation*

Assumed Failure	Systems Remaining†
Emergency Diesel Generator A	All ADS, RCIC, 2 HPCF, 2 RHR/LPFL
Emergency Diesel Generator B or C	All ADS, RCIC, 1 HPCF, 2 RHR/LPFL
RCIC Injection Valve	All ADS, 2 HPCF, 3 RHR/LPFL
One ADS Valve	All ADS minus one, RCIC, 2 HPCF, 3 RHR/LPFL

* Single, active failures are considered in the ECCS performance evaluation. Other postulated failures are not specifically considered because they all result in at least as much ECCS capacity as one of the above designed failures.

† Systems remaining, as identified in this table, are applicable to all non-ECCS line breaks. For the LOCA from an ECCS line break, the systems remaining are those listed, less the ECCS system in which the break is assumed.

Table 6.3-4 Summary of Results of LOCA Analysis

Break Location	Break Size* (cm^2)	Systems Available	PCT (°C)	Maximum Local Oxidation
Based on Appendix K evaluation models:				
Steamline Inside Containment	985	1HPCF + RCIC +2 RHR/LPFL + 8 ADS	552	0.03%
Feedwater Line	839	1 HPCF + 2 RHR/LPFL + 8 ADS	542	0.03%
RHR Shutdown Cooling Suction Line	792	1 HPCF + RCIC + 2 RHR/LPFL+ 8 ADS	542	0.03%
RHR/LPFL Injection Line	205	1 HPCF + RCIC + 1RHR/LPFL + 8 ADS	542	0.03%
High Pressure Core Flooder	92	RCIC+2RHR/ LPFL + 8 ADS	542	0.03%
Bottom Head Drain Line	20.3	1HPCF + RCIC + 2 RHR/LPFL + 8 ADS	542	0.03%
Steamline Outside Containment	3939	1 HPCF + RCIC + 2 RHR/LPFL + 8 ADS	621	0.03%
Based on bounding values:				
Steamline Outside Containment	3939	1 HPCF + RCIC + 2 RHR/LPFL + 8 ADS	619	0.03%

* The most severe ABWR design basis LOCA calculations (Subsection 6.3.3.7.8) involve use of bounding worst-case values for key plant parameters - including an arbitrary 20% increase in the break flow rate. Even with these bounding assumptions, the LOCA analyses demonstrate that the ABWR design still retains large margins between predicted peak fuel clad temperatures and the criteria of 10 CFR 50, Appendix K.

Tolerances associated with fabrication and installation may result as-built break areas that could be 5% greater than these values. Based on the above conservatisms in the LOCA analyses, these as-built variations would not invalidate the plant safety analysis presented in Chapter 6 and Chapter 15.

NOTE: The core-wide metal-water reaction for this analysis has been calculated using method 1 described in Reference 6.3-1. This results in a core-wide metal-water reaction of 0.03%.

Table 6.3-5 Key to Figures

	Appendix K Evaluation Models							
	Main Steamline Inside Contain-ment	**Feedwater Line**	**RHR Suction Line**	**LPFL Injection Line**	**Core Flood Line**	**Bottom Drain Line**	**Main Steamline Outside Contain-ment**	**Bounding Values Main Steamline Outside Contain-ment**
Core Flow	6.3-12	6.3-21	6.3-21	6.3-21	6.3-44	6.3-21	6.3-21	6.3-67
Minimum Critical Power Ratio	6.3-13	6.3-22	6.3-22	6.3-22	6.3-45	6.3-22	6.3-22	6.3-68
Water Level in Fuel Channel	6.3-14	6.3-23	6.3-30	6.3-37	6.3-46	6.3-53	6.3-60	6.3-69
Water Level Inside Shroud	6.3-15	6.3-24	6.3-31	6.3-38	6.3-47	6.3-54	6.3-61	6.3-70
Water Level Outside Shroud	6.3-16	6.3-25	6.3-32	6.3-39	6.3-48	6.3-55	6.3-62	6.3-71
Vessel Pressure	6.3-17	6.3-26	6.3-33	6.3-40	6.3-49	6.3-56	6.3-63	6.3-72
Flow out of Vessel	6.3-18	6.3-27	6.3-34	6.3-41	6.3-50	6.3-57	6.3-64	6.3-73
Flow into Vessel	6.3-19	6.3-28	6.3-35	6.3-42	6.3-51	6.3-58	6.3-65	6.3-74
Peak Cladding Temperature	6.3-20	6.3-29	6.3-36	6.3-43	6.3-52	6.3-59	6.3-66	6.3-75

Table 6.3-6 [Proprietary information not included in DCD (Refer to SSAR Section 6.3, Amendment 34)]

Table 6.3-7 MAPLHGR Versus Exposure*

	Exposure (MW·d/t)	MAPLHGR† kW/m
High Enrichment		
	200	39.4
	1,000	40.0
	5,000	41.7
	10,000	42.3
	15,000	42.3
	20,000	41.3
	25,000	38.4
	30,000	35.4
Medium Enrichment		
	200	39.0
	1,000	39.4
	5,000	39.7
	10,000	40.0
	15,000	40.4
	20,000	39.7
	25,000	38.1
	30,000	37.1
Low Enrichment		
	200	37.7
	1,000	37.4
	5,000	37.1
	10,000	37.7
	15,000	37.7
	20,000	36.1
	25,000	34.1

* For the core loading in Figure 4.3-1

† These values are limited by the peak LHGR of 44.0 kw/m and not by ECCS performance

Table 6.3-8 Design Parameters for HPCF System Components

(1) Main Pumps (C001)	
Number of Pumps	2
Pump Type	Centrifugal
Drive Unit	Constant sped induction motor
Flow Rate	182 m^3/h @ 8.22 MPaA reactor pressure*
	727 m^3/h @ 0.79 MPaA reactor pressure*
Developed Head	890m @ 8.22 MPaA reactor pressure
	190m @ 0.79 MPaA reactor pressure
Maximum Runout Flow	890 m^3/h @ 0.10 MPaA reactor pressure
Minimum Bypass Flow	73 m^3/h
Water Temperature Range	10° to 100°C*
NPSH Required	2.2m
(2) Strainer (D001)	
Location	Suppression Pool
Size	As required for insulation debris per Appendix 6C.
(3) Restricting Orifice (D002)	
Location	Pump discharge line
Size	Limit pump flow to values specified
(4) Condensate Storage Tank	570 m^3 reserve storage for HPCF and RCIC Systems combined
(5) Flow Elements (FE008)	
Location	Pump discharge—downstream of minimum flow bypass line
Head Loss	6.1m w.g. maximum @ 727 m^3/h
Accuracy	±2.5% combined element, transmitter and indicator at maximum rated
(6) Core Flooder Sparger	
Flow Rate	727 m^3/h minimum @ 0.79 MPaA reactor pressure
Pressure Drop	50m w.g. maximum @ 727 m^3/h
(7) Piping and Valves	
Design Pressures	0.31 MPaG—suction and discharge connected to suppression pool
	2.82 MPaG—pump suction
	10.79 MPaG—pump discharge

Table 6.3-8 Design Parameters for HPCF System Components (Continued)

Design Temperatures	66°C – condensate tank suction 100°C – pump suction and discharge 302°C – discharge to vessel
(8) Valve Operation	
Pump Suction Valve, Suppression Pool (F006)	Normally closed, opens on low water level in condensate storage tank or high water level in the suppression pool.
Pump Suction Check Valve, Suppression Pool (F007)	Prevents backflow into suppression pool.
Pump Suction Valve, Condensate Tank (F001)	Normally open, closes when F006 is fully open.
Pump Suction Check Valve, Condensate Tank (F002)	Prevents backflow into condensate storage tank.
Pump Discharge Valve, Reactor Injection Valve (F003)	Normally closed, opens within 36 seconds after initiation signal including D/G loading sequence time.
Testable Check Valve, Reactor Injection Line (F004)	Prevent loss of coolant outside drywell for line break.
Maintenance Valve, Reactor Injection Line (F005)	Normally open, used to isolate system from reactor for maintenance purposes.
Pump Test Line Valves (F008, F009)	Normally closed, throttle valves used to test system flow at rated and runout conditions.
Pump Minimum Flow Line Valve (F010)	Normally closed, opens on signal when pump discharge pressure is high and low flow through flow meter. Used to protect pump from overheating.

* The HPCF System has the capability to deliver at least 50% of these flow rates with 171°C water at the pump suction.

Table 6.3-9 Design Parameters for RHR System Components

(1) Main Pumps (C001)	
Number of Pumps	3
Pump Type	Centrifugal
Drive Unit	Constant Speed Induction Motor
Flow Rate	954 m^3/h
Developed Head	125m
Maximum Runout Flow	1130 m^3/h
Maximum Bypass Flow	148 m^3/h
Minimum Shutoff Head	195m
Maximum Pump Brake Horsepower	550 kW
Water Temperature Range	10° to 182°C
NPSH Required	2.4m
Saturated Water in Suppression Pool Pumped Over Pressure Range	0 to 0.62 MPaG
(2) Heat Exchangers (B001)	
Number of units	3
Seismic	Category I design and analysis
Types of exchangers	U-Tube/Shell
Maximum primary side pressure	3.43 MPaG
Design Point Function Cooling	Post-LOCA Containment
Primary side (tube side) performance data	
(1) Flow	954 m^3/h
(2) Inlet temperature	182°C maximum
(3) Allowable pressure drop (Max)	7.0m w.g.
(4) Type water	Suppression Pool or Reactor Water
(5) Fouling factor	0.0005
Secondary side (shell side) performance data	
(1) Flow	1200 m^3/h
(2) Inlet temperature	43°C maximum
(3) Allowable pressure drop (Max)	7.0m w.g.
(4) Type water	Reactor Building Cooling Water

Table 6.3-9 Design Parameters for RHR System Components (Continued)

(5) Fouling factor	0.0005
(3) Strainer (D008)	
Location	Suppression Pool
Size	As required for insulation debris per Appendix 6C
(4) Restricting Orifices	
Location (D003)	Vessel return line
Size	Limit flow to vessel to 954 m^3/h
Location (D002)	Suppression pool return line
Size	Limit flow during suppression pool cooling to 954 m^3/h
Location (D004)	Fuel pool return line
Size	Limit flow during fuel pool cooling to 350 m^3/h
Location (D00I)	Pump minimum flow line
Size	Limit pump flow through the bypass line to 148 m^3/h
Location (D005)	Discharge line to wetwell spray
Size	Limit wetwell spray sparger flow to 114 m^3/h
Location (D006)	Discharge line to drywell sparger
Size	Limit drywell spray sparger flow to 840 m^3/h
(5) Flow Elements (FE009)	
Location	Pump discharge line, downstream of heat exchanger bypass return
Rated Flow	954 m^3/h
Head Loss	6.1m w.g. maximum @ 954 m^3/h
Accuracy	±2.5% combined element, transmitter and indicator at rated flow
(6) Vessel Flooder Sparger	
Flow Rate	954 m^3/h
Minimum Exit Velocity	11 m/s @ 954 m^3/h
(7) Wetwell Spray Sparger	
Flow Rate	114 m^3/h
(8) Drywell Spray Sparger	
Flow Rate	840 m^3/h

Figure 6.3-5 Pressure Versus Reactor Core Isolation Cooling Flow Used in LOCA Analysis

Figure 6.3-6 Pressure Versus Low Pressure Flooder Flow (Per System) Used in LOCA Analysis

The following figure is located in Chapter 21:

Figure 6.3-7 High Pressure Core Flooder System P&ID (Sheets 1-2)

The following figures have been deleted:

Figure 6.3-8 Not Used (See Figure 5.4-8)

Figure 6.3-9 Not Used (See Figure 5.4-10)

Table 6.3-9 Design Parameters for RHR System Components (Continued)

(9) Piping and Valves	
Design Pressures	0.31 MPaG—discharge piping connected to suppression pool
	0.31 MPaG—suction piping connected to suppression pool
	3.43 MPaG—wetwell and drywell sparger piping
	2.82 MPaG—pump suction piping
	3.43 MPaG—pump discharge piping
	8.62 MPaG—vessel suction and return piping
Design Temperatures	104°C—suppression pool piping and wetwell sparger piping
	171°C—drywell sparger piping
	182°C —pump suction and discharge piping
	302°C—vessel suction and return piping
(10) Valve Operation	
See Table 5.4-3, RHR Pump/Valve Logic	

Table 6.3-10 Single Failure Evaluation With One HPCF Subsystem Out of Service*

Assumed Failure	Systems Remaining †
Emergency Diesel Generator A	8 ADS, RCIC, 1 HPCF, 2 RHR/LPFL
Emergency Diesel Generator B or C	8 ADS, RCIC 2, RHR/LPFL
RCIC Injection Valve	8 ADS, 1 HPCF, 3 RHR/LPFL
One ADS Valve	7 ADS, RCIC, 1 HPCF, 3 RHR/LPFL

* Single, active failures are considered in the ECCS performance evaluation. Other postulated failures are not specifically considered because they result in at least as much ECCS capacity as one of the above.

† Systems remaining, as identified in this table, are applicable to all non-ECCS line breaks. For a postulated LOCA resulting from an ECCS line break, the systems remaining are those listed, less the ECCS system in which the break is assumed.

Table 6.3-11 Single Failure Evaluation With One RHR/LPFL Subsystem Out of Service*

Assumed Failure	Systems Remaining†
Emergency Diesel Generator A	8 ADS, RCIC, 2 HPCF, 1 RHR/LPFL
Emergency Diesel Generator B or C	8 ADS, RCIC, 1 HPCF, 1 RHR/LPFL
RCIC Injection Valve	8 ADS, 2 HPCF, 2 RHR/LPFL
One ADS Valve	7 ADS, RCIC, 2 HPCF, 2 RHR/LPFL

* Single, active failures are considered in the ECCS performance evaluation. Other postulated failures are not specifically considered because they result in at least as much ECCS capacity as one of the above.

† Systems remaining, as identified in this table, are applicable to all non-ECCS line breaks. For a postulated LOCA resulting from an ECCS line break, the systems remaining are those listed, less the ECCS system in which the break is assumed.

Table 6.3-12 Single Failure Evaluation With ECCS Division A Out of Service*

Assumed Failure	Systems Remaining†
Emergency Diesel Generator B or C	8 ADS, 1 HPCF, 1 RHR/LPFL
One ADS Valve	7 ADS, 2 HPCF, 2 RHR/LPFL

* Single, active failures are considered in the ECCS performance evaluation. Other postulated failures are not specifically considered because they all result in at least as much ECCS capacity as one of the above designated failures.

† Systems remaining, as identified in this table, are applicable to all non-ECCS line breaks. For a postulated LOCA resulting from an ECCS line break, the systems remaining are those listed, less the ECCS system in which the break is assumed.

Table 6.3-13 Single Failure Evaluation With ECCS Division B Out of Service*

Assumed Failure	Systems Remaining†
Emergency Diesel Generator A	8 ADS, RCIC, 1 HPCF, 1 RHR/LPFL
Emergency Diesel Generator C	8 ADS, RCIC, 1 RHR/LPFL
RCIC Injection Valve	8 ADS, 1 HPCF, 2 RHR/LPFL
One ADS Valve	7 ADS, RCIC, 1 HPCF, 2 RHR/LPFL

* Single, active failures are considered in the ECCS performance evaluation. Other postulated failures are not specifically considered because they all result in at least as much ECCS capacity as one of the above designated failures.

† Systems remaining, as identified in this table, are applicable to all non-ECCS line breaks. For a postulated LOCA resulting from an ECCS line break, the systems remaining are those listed, less the ECCS system in which the break is assumed.

Table 6.3-14 Single Failure Evaluation With ECCS Division C Out of Service*

Assumed Failure	Systems Remaining†
Emergency Diesel Generator A	8 ADS, RCIC, 1 HPCF, 1 RHR/LPFL
Emergency Diesel Generator B	8 ADS, RCIC, 1 RHR/LPFL
RCIC Injection Valve	8 ADS, 1 HPCF, 2 RHR/LPFL
One ADS Valve	7 ADS, RCIC, 1 HPCF, 2 RHR/LPFL

* Single, active failures are considered in the ECCS performance evaluation. Other postulated failures are not specifically considered because they all result in at least as much ECCS capacity as one of the above designated failures.

† Systems remaining, as identified in this table, are applicable to all non-ECCS line breaks. For a postulated LOCA resulting from an ECCS line break, the systems remaining are those listed, less the ECCS system in which the break is assumed.

Table 6.3-15 Single Failure Evaluation With Two ADS Valves Out of Service*

Assumed Failure	Systems Remaining†
Emergency Diesel Generator A	6 ADS, RCIC, 2HPCF, 2 RHR/LPFL
Emergency Diesel Generator B or C	6 ADS, RCIC, 1 HPCF, 2 RHR/LPFL
RCIC Injection Valve	6 ADS, 2 HPCF, 3 RHR/LPFL
One ADS Valve	5 ADS, RCIC, 1 HPCF, 3 RHR/LPFL

* Single, active failures are considered in the ECCS performance evaluation. Other postulated failures are not specifically considered because they all result in at least as much ECCS capacity as one of the above designated failures.

† Systems remaining, as identified in this table, are applicable to all non-ECCS line breaks. For a postulated LOCA resulting from an ECCS line break, the systems remaining are those listed, less the ECCS system in which the break is assumed.

The following figures are located in Chapter 21:

Figure 6.3-1 High Pressure Core Flooder System PFD (Sheets 1–2)

Figure 6.3-2 Not Used (See Figure 5.4-9)

Figure 6.3-3 Not Used (See Figure 5.4-11)

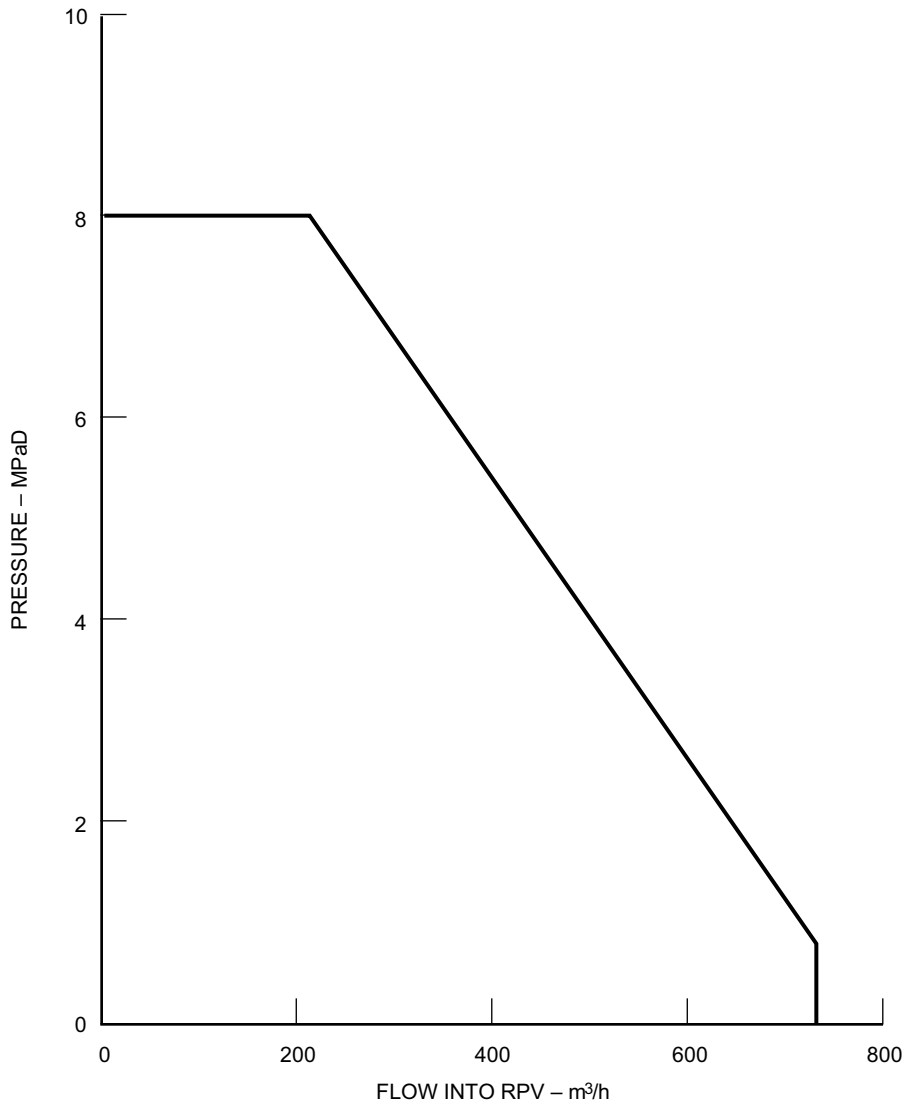

Figure 6.3-4 Pressure Versus High Pressure Core Flooder Flow (Per System) Used in LOCA Analysis

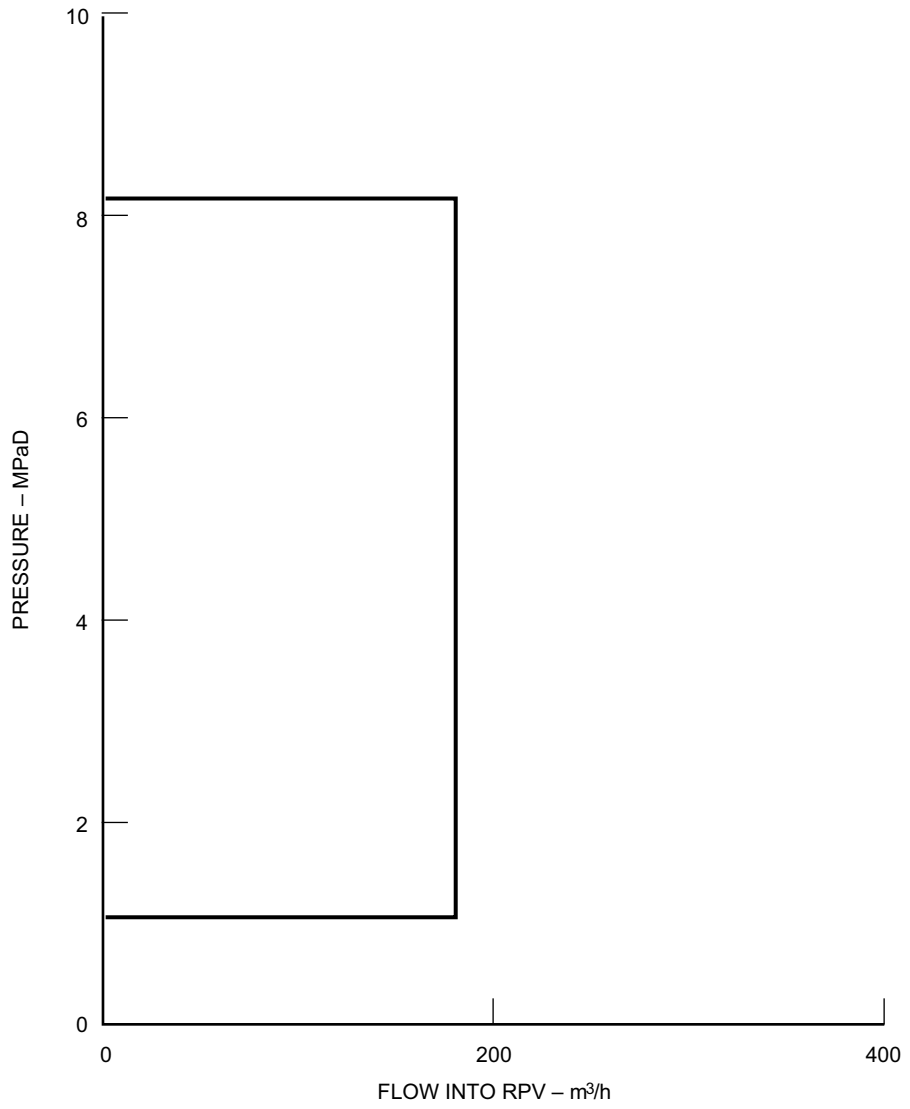

Figure 6.3-5 Pressure Versus Reactor Core Isolation Cooling Flow Used in LOCA Analysis

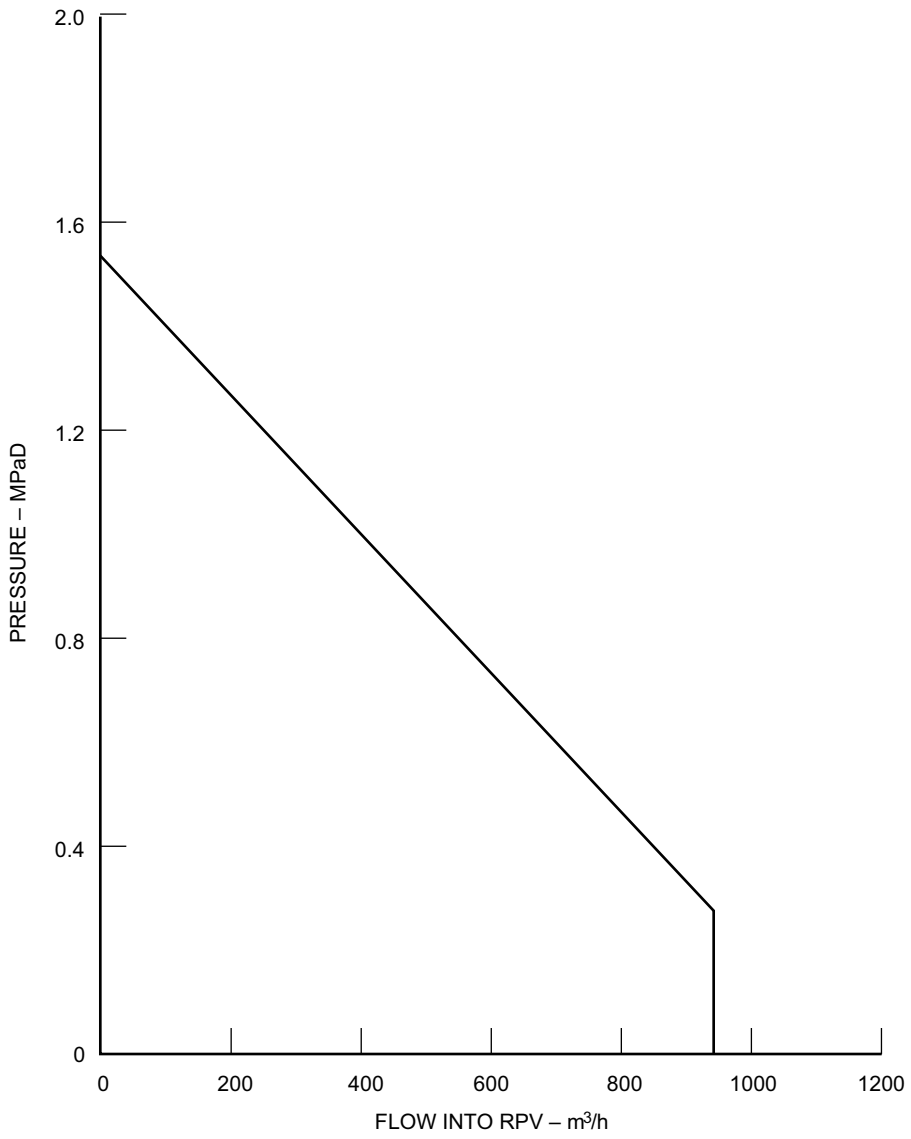

Figure 6.3-6 Pressure Versus Low Pressure Flooder Flow (Per System) Used in LOCA Analysis

The following figure is located in Chapter 21:

Figure 6.3-7 High Pressure Core Flooder System P&ID (Sheets 1-2)

The following figures have been deleted:

Figure 6.3-8 Not Used (See Figure 5.4-8)

Figure 6.3-9 Not Used (See Figure 5.4-10)

Figure 6.3-10 [Proprietary information not included in DCD (Refer to SSAR Section 6.3, Amendment 34)]

Figure 6.3-11 [Proprietary information not included in DCD (Refer to SSAR Section 6.3, Amendment 34)]

Figure 6.3-12 [Proprietary information not included in DCD (Refer to SSAR Section 6.3, Amendment 34)]

Figure 6.3-13 [Proprietary information not included in DCD (Refer to SSAR Section 6.3, Amendment 34)]

Figure 6.3-14 [Proprietary information not included in DCD (Refer to SSAR Section 6.3, Amendment 34)]

Figure 6.3-15 [Proprietary information not included in DCD (Refer to SSAR Section 6.3, Amendment 34)]

Figure 6.3-16 [Proprietary information not included in DCD (Refer to SSAR Section 6.3, Amendment 34)]

Figure 6.3-17 [Proprietary information not included in DCD (Refer to SSAR Section 6.3, Amendment 34)]

Figure 6.3-18 [Proprietary information not included in DCD (Refer to SSAR Section 6.3, Amendment 34)]

Figure 6.3-19 [Proprietary information not included in DCD (Refer to SSAR Section 6.3, Amendment 34)]

Figure 6.3-20 [Proprietary information not included in DCD (Refer to SSAR Section 6.3, Amendment 34)]

Figure 6.3-21 [Proprietary information not included in DCD (Refer to SSAR Section 6.3, Amendment 34)]

Figure 6.3-22 [Proprietary information not included in DCD (Refer to SSAR Section 6.3, Amendment 34)]

Figure 6.3-23 [Proprietary information not included in DCD (Refer to SSAR Section 6.3, Amendment 34)]

Figure 6.3-24 [Proprietary information not included in DCD (Refer to SSAR Section 6.3, Amendment 34)]

Figure 6.3-25 [Proprietary information not included in DCD (Refer to SSAR Section 6.3, Amendment 34)]

Figure 6.3-26 [Proprietary information not included in DCD (Refer to SSAR Section 6.3, Amendment 34)]

Figure 6.3-27 [Proprietary information not included in DCD (Refer to SSAR Section 6.3, Amendment 34)]

Figure 6.3-28 [Proprietary information not included in DCD (Refer to SSAR Section 6.3, Amendment 34)]

Figure 6.3-29 [Proprietary information not included in DCD (Refer to SSAR Section 6.3, Amendment 34)]

Figure 6.3-30 [Proprietary information not included in DCD (Refer to SSAR Section 6.3, Amendment 34)]

Figure 6.3-31 [Proprietary information not included in DCD (Refer to SSAR Section 6.3, Amendment 34)]

Figure 6.3-32 [Proprietary information not included in DCD (Refer to SSAR Section 6.3, Amendment 34)]

Figure 6.3-33 [Proprietary information not included in DCD (Refer to SSAR Section 6.3, Amendment 34)]

Figure 6.3-34 [Proprietary information not included in DCD (Refer to SSAR Section 6.3, Amendment 34)]

Figure 6.3-35 [Proprietary information not included in DCD (Refer to SSAR Section 6.3, Amendment 34)]

Figure 6.3-36 [Proprietary information not included in DCD (Refer to SSAR Section 6.3, Amendment 34)]

Figure 6.3-37 [Proprietary information not included in DCD (Refer to SSAR Section 6.3, Amendment 34)]

Figure 6.3-38 [Proprietary information not included in DCD (Refer to SSAR Section 6.3, Amendment 34)]

Figure 6.3-39 [Proprietary information not included in DCD (Refer to SSAR Section 6.3, Amendment 34)]

Figure 6.3-40 [Proprietary information not included in DCD (Refer to SSAR Section 6.3, Amendment 34)]

Figure 6.3-41 [Proprietary information not included in DCD (Refer to SSAR Section 6.3, Amendment 34)]

Figure 6.3-42 [Proprietary information not included in DCD (Refer to SSAR Section 6.3, Amendment 34)]

Figure 6.3-43 [Proprietary information not included in DCD (Refer to SSAR Section 6.3, Amendment 34)]

Figure 6.3-44 [Proprietary information not included in DCD (Refer to SSAR Section 6.3, Amendment 34)]

Figure 6.3-45 [Proprietary information not included in DCD (Refer to SSAR Section 6.3, Amendment 34)]

Figure 6.3-46 [Proprietary information not included in DCD (Refer to SSAR Section 6.3, Amendment 34)]

Figure 6.3-47 [Proprietary information not included in DCD (Refer to SSAR Section 6.3, Amendment 34)]

Figure 6.3-48 [Proprietary information not included in DCD (Refer to SSAR Section 6.3, Amendment 34)]

Figure 6.3-49 [Proprietary information not included in DCD (Refer to SSAR Section 6.3, Amendment 34)]

Figure 6.3-50 [Proprietary information not included in DCD (Refer to SSAR Section 6.3, Amendment 34)]

Figure 6.3-51 [Proprietary information not included in DCD (Refer to SSAR Section 6.3, Amendment 34)]

Figure 6.3-52 [Proprietary information not included in DCD (Refer to SSAR Section 6.3, Amendment 34)]

Figure 6.3-53 [Proprietary information not included in DCD (Refer to SSAR Section 6.3, Amendment 34)]

Figure 6.3-54 [Proprietary information not included in DCD (Refer to SSAR Section 6.3, Amendment 34)]

Figure 6.3-55 [Proprietary information not included in DCD (Refer to SSAR Section 6.3, Amendment 34)]

Figure 6.3-56 [Proprietary information not included in DCD (Refer to SSAR Section 6.3, Amendment 34)]

Figure 6.3-57 [Proprietary information not included in DCD (Refer to SSAR Section 6.3, Amendment 34)]

Figure 6.3-58 [Proprietary information not included in DCD (Refer to SSAR Section 6.3, Amendment 34)]

Figure 6.3-59 [Proprietary information not included in DCD (Refer to SSAR Section 6.3, Amendment 34)]

Figure 6.3-60 [Proprietary information not included in DCD (Refer to SSAR Section 6.3, Amendment 34)]

Figure 6.3-61 [Proprietary information not included in DCD (Refer to SSAR Section 6.3, Amendment 34)]

Figure 6.3-62 [Proprietary information not included in DCD (Refer to SSAR Section 6.3, Amendment 34)]

Figure 6.3-63 [Proprietary information not included in DCD (Refer to SSAR Section 6.3, Amendment 34)]

Figure 6.3-64 [Proprietary information not included in DCD (Refer to SSAR Section 6.3, Amendment 34)]

Figure 6.3-65 [Proprietary information not included in DCD (Refer to SSAR Section 6.3, Amendment 34)]

Figure 6.3-66 [Proprietary information not included in DCD (Refer to SSAR Section 6.3, Amendment 34)]

Figure 6.3-67 [Proprietary information not included in DCD (Refer to SSAR Section 6.3, Amendment 34)]

Figure 6.3-68 [Proprietary information not included in DCD (Refer to SSAR Section 6.3, Amendment 34)]

Figure 6.3-69 [Proprietary information not included in DCD (Refer to SSAR Section 6.3, Amendment 34)]

Figure 6.9-70 [Proprietary information not included in DCD (Refer to SSAR Section 6.3, Amendment 34)]

Figure 6.3-71 [Proprietary information not included in DCD (Refer to SSAR Section 6.3, Amendment 34)]

Figure 6.3-72 [Proprietary information not included in DCD (Refer to SSAR Section 6.3, Amendment 34)]

Figure 6.3-73 [Proprietary information not included in DCD (Refer to SSAR Section 6.3, Amendment 34)]

Figure 6.3-74 [Proprietary information not included in DCD (Refer to SSAR Section 6.3, Amendment 34)]

Figure 6.3-75 [Proprietary information not included in DCD (Refer to SSAR Section 6.3, Amendment 34)]

Figure 6.3-76 [Proprietary information not included in DCD (Refer to SSAR Section 6.3, Amendment 34)]

Figure 6.3-77 [Proprietary information not included in DCD (Refer to SSARSection 6.3, Amendment 34)]

Figure 6.3-78 [Proprietary information not included in DCD (Refer to SSARSection 6.3, Amendment 34)]

Figure 6.3-79 [Proprietary information not included in DCD (Refer to SSAR Section 6.3, Amendment 34)]

6.4 Habitability Systems

The Control Room Habitability Area (CRHA) HVAC System is provided to ensure that the control room operators can remain in the main control area envelope and take actions to operate the plant safely under normal conditions and to maintain it in a safe condition under accident conditions.

The habitability systems include missile protection, radiation shielding, radiation monitoring, air filtration and ventilation systems, lighting, personnel and administrative support, and fire protection.

Detailed descriptions of the various habitability systems and provisions are discussed in the following sections:

Conformance with NRC General Design Criteria	Section 3.1
Wind and Tornado Loadings	Section 3.3
Water Level (Flood) Design	Section 3.4
Missile protection	Section 3.5
Protection Against Dynamic Effects Associated with the Postulated Rupture of Piping	Section 3.6
Qualification of Seismic Category I Instrumentation and Electrical Equipment	Section 3.10
Environmental Design of Safety-Related Mechanical and Electrical Equipment	Section 3.11
Radiation Protection Design Features	Section 12.3 (Also Chapter 15)
Control Room Habitability Area HVAC System	Subsection 9.4.1
Fire Protection Systems	Subsection 9.5.1
Lighting Systems	Subsection 9.5.3
Electric Power Systems	Chapter 8
Radiation Instrumentation and Monitoring	Subsection 7.6.1.2 (Also Subsection 12.3.4 and Section 11.5)

Equipment and systems are discussed in this section only as necessary to describe their connection with main control area envelope habitability. References to other sections are made where appropriate.

The term "main control area envelope" includes the main control room, areas adjacent to the main control room containing plant information and equipment necessary to normal and emergency operations, and kitchen and sanitary facilities. These areas include the rooms which comply with the requirements of SRP Section 6.4 for "Control Room Emergency Zone." It also includes the zone serviced by the control room habitability area HVAC System. "Emergency conditions" include such postulated releases as radioactive materials, toxic gases, smoke and steam.

The "systems" include the following:

(1) Control Building shielding and area radiation monitoring

(2) Control room habitability area heating, ventilating and air conditioning

(3) Provision for emergency food, water storage and air supply system

(4) Main kitchen and sanitary facilities are provided in the Service Building, and emergency facilities in the CRHA.

(5) Provision for protection from, and removal of airborne radioactive contaminants

(6) Removal of smoke and toxic gases

(7) Sleeping facilities

6.4.1 Design Basis

Criteria for the selection of design bases are found in Subsection 1.2.1.2.

Protection of the habitability systems of the Control Building from wind and tornado effects is discussed in Section 3.3, flood design in Section 3.4, missile protection in Section 3.5, protection against dynamic effects associated with the postulated rupture of piping in Section 3.6, seismic design of electrical components in Section 3.10, and environmental design in Section 3.11.

6.4.1.1 Safety Design Basis

(1) The main control area envelope, or pressure boundary, includes all instrumentation and controls necessary for safe shutdown of the plant and is limited to those areas requiring continuous operator access during and after a design basis accident (DBA).

(2) Food, sleeping accommodations, medical supplies and sanitary facilities are provided to sustain an emergency team of five persons for a period of 5 days.

(3) The CRHA HVAC System during emergency mode maintains a suitable environment for sustained occupancy of 12 persons.

(4) The radiation exposure of Control Building personnel through the duration of any one of the postulated DBAs discussed in Chapter 15 does not exceed the guidelines set by 10CFR50 Appendix A, General Design Criterion 19.

(5) The habitability systems provide the capability to detect and limit the introduction of radioactive material and smoke into the control room.

(6) Self-contained breathing apparatus and other protection such as may be required for eye and skin will be provided for emergency use within the Control Building.

(7) The main control area envelope ventilation system maintains the control room atmosphere at temperatures suitable for prolonged occupancy throughout the duration of any one of the postulated DBAs discussed in Chapter 15.

(8) The main control area envelope ventilation system is capable of automatic transfer from its normal operation mode to its emergency or isolation modes upon detection of conditions which could result in accidental exposure of control room personnel to a high level of airborne radioactivity.

(9) The habitability system and components are contained in a Seismic Category I structure that is tornado-missile, pressure and flood protected.

(10) Nonseismic pipe, ductwork for the kitchen and sanitary facilities in the Control Building are designed to ensure that their physical collapse during a SSE will not adversely affect safety-related components.

(11) The CRHA HVAC System is designed with sufficient redundancy to ensure operation under emergency conditions assuming the single failure of any one active component.

(12) The CRHA HVAC ducting is ESF designed and the hangers are designed to Seismic Category I requirements.

(13) The safety-related components of the CRHA HVAC System are operable during loss of offsite power using divisional onsite power from the diesel generators and safety-related batteries.

(14) The main control area envelope defining the confines of the control room and auxiliary spaces is sufficiently leaktight so that a positive pressure can be maintained.

6.4.1.2 Power Generation Design Bases

(1) The CRHA HVAC System is designed to provide and maintain an environment with controlled temperature and humidity to ensure both comfort and safety of the operators and the integrity of the control room components.

(2) Provisions for periodic inspection, testing and maintenance of the principal components shall be a part of the design requirements.

6.4.2 System Design

Figure 9.4-1 provides the flow diagrams describing the CRHA HVAC System. Heating, cooling and pressurizing the main control area envelope, and filtering the air therein, are described in Section 9.4.1, wherein function is discussed and equipment is listed.

6.4.2.1 Main Control Area Envelope

The Control Building spaces within the envelope supplied by the control room habitability area HVAC System include:

(1) Control room proper including the critical document file

(2) Computer room

(3) Control equipment room

(4) Upper and lower corridors

(5) Office and chart room

(6) Instrument repair room

(7) Sleeping area includes minimal kitchen and sanitary facilities

The following supplemental facilities are provided in the Service Building outside the CRHA HVAC area:

(1) Kitchen and lunch rooms

(2) Men’s lavatory

(3) Women’s lavatory and lounge

The main control room area envelope is maintained at a positive pressure of 3.2 mm to 6.4 mm of water gauge pressure at all times with respect to the atmosphere. Pressure control damper at the inlet of the exhaust fans maintain these pressures. These spaces constitute the operation,

living and environmental control areas and can be isolated for an extended period if such is required by the existence of a LOCA or high radiation condition.

6.4.2.2 Control Room Habitability Area HVAC System Design

The design, construction and operation of the CRHA HVAC System are described in detail in Subsection 9.4.1. Figure 9.4-1 is a diagram of the control room habitability area HVAC System, showing major components, seismic classifications and instrumentation.

A description of the charcoal filters is given in Subsection 9.4.1.

A description of control room instrumentation for monitoring of radioactivity is given in Subsections 11.5.2 and 12.3.4.

A description of the smoke detectors is in Subsection 9.5.1.

6.4.2.2.1 Control Room Drawings

Layout drawings of the control room and the remainder of the Control Building are given in Section 1.2.

6.4.2.2.2 Release Points

Release points (SGTS vent) are shown in Figure 6.4-1 (plan view). The air intakes are well above grade. Elevation of other structures is seen in Figures 1.2-9 and 1.2-10.

6.4.2.3 Leaktightness

The main control room area envelope boundary walls are designed with low leakage construction. All boundary penetrations are sealed. The access doors are designed with self-closing devices which close and latch the doors automatically following the passage of personnel.

6.4.2.4 Interaction with Other Zones and Pressure-Containing Equipment

The main control area envelope is heated, cooled, ventilated and pressurized by a recirculating air system using filtered outdoor air for ventilation and pressurization purposes. Recirculated air and outdoor air are mixed and drawn through filters, a cooling coil and electric heating coils.

There are two intakes on the top floor side walls of the Control Building, one on each end. Radiation monitoring sensors located in each outdoor air intake duct warn the operating personnel (by means of readouts and alarms in the main control room) of the presence of airborne contamination. Also, the signal automatically closes down the contaminated air intake valves and normal vent dampers, opens the emergency vent dampers, and turns on the primary emergency filter unit fans on reduced flow. If both air intakes are contaminated, the control room operator can manually override the system to open either air intake to draw makeup air

when necessary. This makeup air is routed through HEPA and charcoal filtering system for cleanup before being used for pressurization.

The main control area envelope is maintained at positive pressure with respect to atmosphere. In an emergency, the pressure differential will eliminate infiltration of airborne contamination. The doors are of the double vestibule type to increase pressure differential between rooms, thereby eliminating infiltration when the doors are opened.

The main control area envelope must remain habitable during emergency conditions. To make this possible, potential sources of danger such as steamlines, pressure vessels, CO_2 fire fighting containers, etc. are located outside of the main control area envelope and the compartments containing Control Building life support systems.

A tabulation of moving components in the CRHA HVAC System, along with the respective failure mode and effects, is shown in Table 6.4-1.

All dampers except the mixing dampers in the air conditioning units and the pressure control damper in the exhaust plenum are of the two position (open or closed) type.

6.4.2.5 Shielding Design

6.4.2.5.1 Design Basis

The Control Building shielding design is based upon adequately protecting against the radiation resulting from an incident or incidents leading to a LOCA. The dose rates received under normal operating conditions of the reactor are not determining factors in any of the walls sized in this specification.

Radioactivity released by an inadequate response to a LOCA can result in four different activity distributions, or sources, that can affect Control Building personnel whole body doses.

(1) The fission products held in the containment “shine” on the Control Building. (Those remaining in the reactor vessel, however, contribute negligibly to this effect.)

(2) The fission products which are released from the SGTS stack will not form a cloud enveloping the Control Building.

(3) A minor fraction of the fission products released from the containment will be taken into the Control Building via one of the CRHA HVAC System dual air intakes. The majority of the iodine taken in will be absorbed on a charcoal bed, which will then become a concentrated source within the building. Also, solid daughters of noble gases collect on the filters. Personnel on the control room level, as well as the equipment room and HVAC room levels, will be shielded from this source.

(4) Fission products that pass through and evolve from the filters become a source of radiation exposure to Control Building personnel. This source determines a portion of the whole body dose, as well as the thyroid and beta skin doses. See Subsection 15.6.5 for these dose analyses.

The DBA analysis is structured on the conservative NRC assumptions. The percentages of 102% rated power fission product equilibrium inventories released from the reactor vessel and available for release from the containment are given below:

Fission product	Released from Reactor Vessel	Available for Release from Containment
Noble Gases	100%	100%
Halogens	50%	25%
Solids	1%	Negligible

The primary containment leak rate assumed for the design analyses is 0.5% of the containment volume per day. Radioactive decay during transport through the containment is taken into account. The leaked radioactivity goes into the Reactor Building secondary containment and then to the SGTS, from which it is vented to the atmosphere. The SGTS charcoal filter is assumed to be 99% efficient for filtering radioiodines, and none of the vented gas is assumed to bypass the filter.

6.4.2.5.2 Source Terms and Results

Containment sources “shining” on the Control Building are listed in Section 12.2. Source terms for the cloud and filter are consistent with the activity releases given in Subsection 15.6.5. Concentration of each isotope is calculated as the product of the release rate (Bq/s) times the appropriate relative concentration, or Chi/Q (s/m^3). These values and the corresponding result are provided in Subsection 15.6.5.

6.4.3 System Operation Procedures

During normal operation, the control room habitability area HVAC System operates with mixed recirculated and outdoor air, which pressurizes the subject spaces. Emergency conditions such as a LOCA or high radiation cause an automatic changeover reducing outside air intake and to start charcoal filtering all outside air and a portion of the return air. This effectively isolates operating personnel from the environment and from airborne contamination. Protection from direct radiation is discussed in Subsection 6.4.2.5.

Detection of radioactivity is instrumented, and changeover to reduced circulation and charcoal filtering is automatic. Redundancy of instrumentation and air handling systems ensures against system failure due to single component failure.

The above operational description is brief. For a more detailed description of normal and emergency operation of the control room habitability systems, see Subsections 9.4.1, 9.5.1, 9.5.3, 12.3.4, 6.5.1, and Chapter 8.

6.4.4 Design Evaluations

6.4.4.1 Radiological Protection

The Chi/Qs used for evaluation of the control room operator dose to meet General Design Criterion 19 are presented in Subsection 15.6.5.

6.4.4.2 Smoke and Toxic Gas Protection

As discussed and evaluated in Subsection 9.5.1, the use of non-combustible construction and heat- and flame-resistant materials throughout the plant minimizes the likelihood of fire and consequential fouling of the main control area envelope atmosphere with smoke or noxious vapor introduced in to the control room air. In the smoke removal mode, the purge flow through the Control Building provides three air changes per hour in order to sweep atmospheric contaminants out of the area.

The main control area envelope is normally exhausted from the recirculation plenum by one of the exhaust fans. Smoke removal is accomplished by starting both exhaust fans at high speed in conjunction with a supply fan and realigning the dampers for exhausting directly to the exhaust vent. The above changeover is under manual control from the main control room. Operating personnel in the control room exercise this option in response to signals from the smoke detection sensors located in the subject spaces and in the associated ductwork.

Transfer of the system to the isolation mode for exterior smoke may also be initiated manually from the control room. Local, audible alarms warn the operators to shut the self-closing doors, if, for some reason, they are held open after the receipt of a transfer signal. Isolation mode makeup air flow, required after approximately 72 hours of isolation (based on the buildup of carbon dioxide to 1% by volume in the space due to the respiration of 12 persons), must be initiated manually by the operator after tests with portable air analyzers indicate the need to do so. However, the operator is allowed to manually initiate the isolation mode makeup airflow after 10 minutes of isolation mode.

Redundant components are provided, where necessary, to ensure that a single failure will not preclude adequate main control area envelope ventilation. A CRHA HVAC System failure analysis is presented in Table 6.4-2.

The CRHA HVAC System is designed in accordance with Seismic Category I requirements (Section 3.2). The failure of components (and supporting structures) of any system, equipment or structure which is not Seismic Category I will not result in loss of a required function of the CRHA HVAC System.

Individual respirators for personnel use in the event of toxic gas intrusion, which cannot for any reason be adequately removed by the smoke removal mode, are stored in the control room ready for immediate use. Sufficient respirators are maintained for the full complement of personnel assigned to the control room. As emergency safety life support equipments, these respirators are subject to operational test and inspection at regular intervals.

All personnel attached to the Control Building group and all others that may be exposed to smoke and/or toxic gases in the Control Building are trained in the use of the respirator. Initiation training is supplemented by refresher sessions at six-month intervals.

See Subsection 6.4.7.1 for COL license information pertaining to toxic gases.

6.4.4.3 Life Support

In addition to the supply and of vital air, food, water and sanitary facilities are provided.

Food storage space is provided as a part of the operator area adjacent to the main control room. Water and food storage adequate for 12 people for 5 days is stored in this area. The storage cabinets have a net volume of $0.7m^3$ useable for food storage. In addition, the refrigerator has a net volume of $0.28m^3$ available. Potable water is stored in sealed sanitary containers in the operator area.

All foodstuffs and water intended for emergency use must be so labeled and not be used for normal conditions, thus ensuring an adequate supply at all times for emergency use.

The sanitary facilities are located in the Service Building near the CRHA. In addition, space in the operator area for the inclusion of sanitary facilities if the site conditions permit.

6.4.5 Testing and Inspection

The system is designed to permit periodic inspection of important components (e.g., fans, motors, coils, filters, ductwork, piping, dampers, control instrumentation and valves), to assure the integrity and efficiency of the system. Local display and indicating devices are provided for periodic inspection of vital parameters such as air temperature upstream and downstream of the heating and cooling coils, cooling water inlet temperatures, filter pressure drop, duct static pressures, and cooling water pressures at the inlet and outlet of coils.

Test connections are provided in the duct work and piping for periodic checking of air and water flows for conformance to design requirements. All features are periodically tested by initiating all dampers during normal operation. The operating system is proven operable by its performance during normal plant operations. The HEPA filters are periodically tested with DOP smoke per ANSI N510. The charcoal filters are to be periodically tested with a freon gas for adsorption efficiency. Inspection and sampling connections are provided for on site filter testing.

Filter pressure drop is to be routinely monitored and a high differential alarm alerts the operator to switch over to standby system for filter replacement.

The systems are to be tested periodically by initiating the changeover sequence during normal operation. All equipment is designed to facilitate the above discussed test and inspection functions.

Failure of any system or component to properly perform its assigned function during any test or inspection is grounds for repair or replacement.

6.4.6 Instrumentation Requirements

A complete description of the required instrumentation is given in Subsection 7.3.1.1.8, 9.4.1 and 9.4.5.

6.4.7 COL License Information

6.4.7.1 Toxic Gases

General Design Criterion 19 is related to providing adequate protection to permit access and occupancy of the main control area envelope under accident conditions. Acceptance is based upon meeting the guidance of Regulatory Guide 1.78 relating to instrumentation to detect and alarm any hazardous chemical release in the plant vicinity and relating to the systems capability to isolate the main control area envelope from such releases; and Regulatory Guide 1.95 relating to the systems capability to limit the accumulation of chlorine within the main control area envelope. The ABWR is not designed for any particular hazardous chemical release except exterior smoke. The main control area envelope is provided with a filtration system for radioactivity release and can be easily modified for isolation signals to handle additional toxic chemical sensors. Chemical accidents (including chlorine) require site specific information such as frequency, distance from control room, and size of container (Subsection 6.4.4.2).

Table 6.4-1 Identification of Failure/Effect in the Control Room Habitability Area HVAC System

Component Nomenclature	Mode	Failure Effect	Action
Main Outside Air	Open	Contaminated Air Penetration	RE Automatically Starts Emergency Unit
Emergency Outside Air Damper	Closed	Loss of Control Room Pressurization	Flow Switch Starts Redundant Unit
Emergency Outside Air Supply Fan	No Flow	Loss of Control Room Pressurization	Flow Switch Starts Redundant Unit
Main Control Area Envelope Supply Fan	No Flow	Loss of Control Room Cooling	Flow Switch Starts Standby Unit
Main Control Area Envelope Return Fan	No Rotation	Control Room Overpressurization	Flow Switch Starts Redundant Unit
Main Control Area Envelope Return Air Damper	Closed	Partial Loss of Control Room Cooling	Flow Switch Starts Redundant Unit

Note:

Failure mode and effect is indicated for each individual component in the system during an emergency operation. The postulation of more than a single failure in the system is not considered.

Table 6.4-2 Control Room Habitability Area HVAC System Failure Analysis

Component	Malfunction	Comments
Air-conditioning supply or return fan	Failure of a fan resulting in loss of duct pressure.	Should an operating fan fail, the resultant loss of duct pressure actuates an alarm, and transfers operation to the standby fan. Fans are powered from engineered safety features (ESF) buses.
Chiller (Refrigerator)	Failure of a chiller resulting in loss of cooling capacity.	Following the loss of a chiller, air temperature on discharge of A/C unit fan increases and actuates a high temperature alarm in the control room. The defective unit would shut down, and the standby A/C unit started. Chillers are powered from the ESF buses.
Main Control Area Envelope emergency filtration system	Failure resulting in high pressure differential across filter unit.	High pressure differential across filter unit will actuate an alarm in control room. Defective filter will isolate and standby system brought into service.
Outside air supply intake	Failure resulting in loss of outside air supply.	Two redundant and separate outside air supply sources have been provided.
Radiation monitor in outside air supply duct	Failure resulting in loss of radiation-monitoring capability.	Four channleds of radiation monitors are provided in parallel.
Smoke detector	Failure or loss in smoke detection capability.	A minimum of two products of combustion detectors located in each safety-related air intake duct.

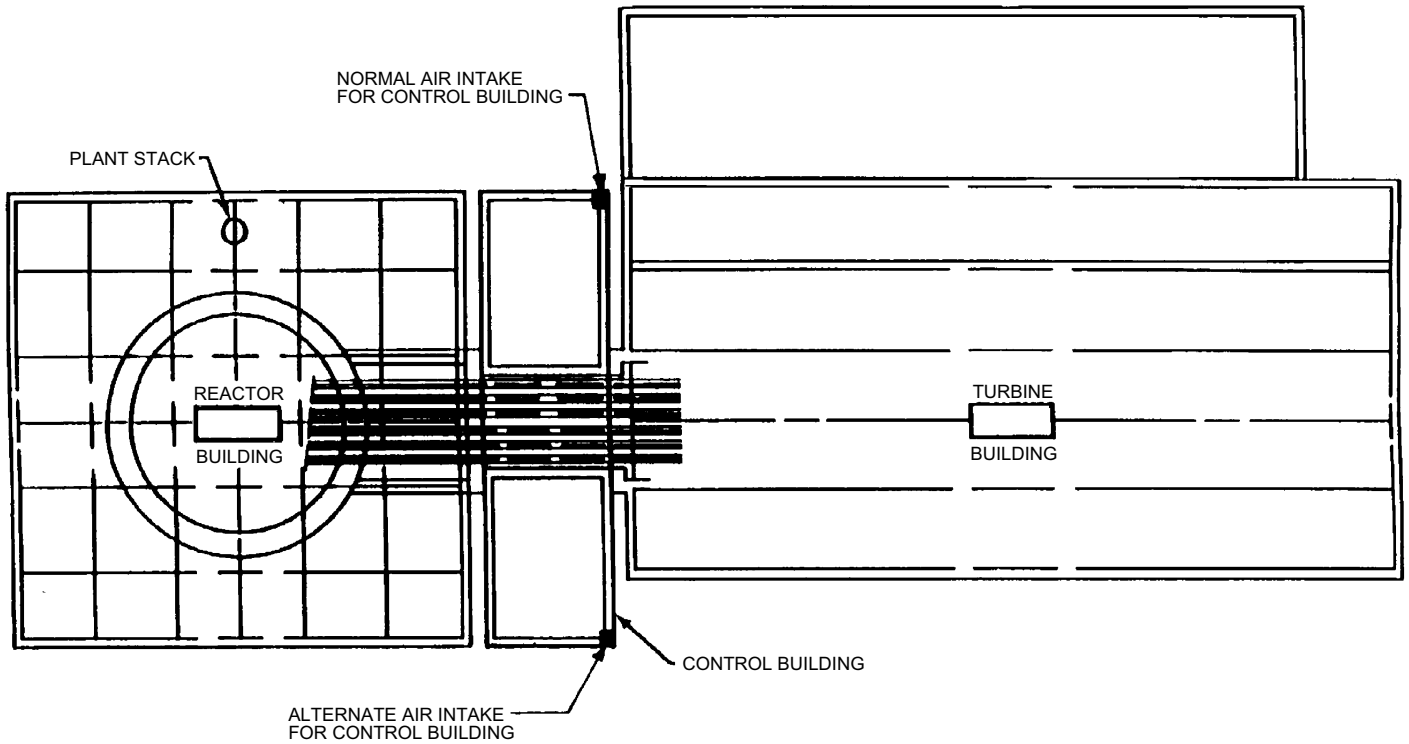

Figure 6.4-1 Plant Layout

6.5 Fission Products Removal and Control Systems

6.5.1 Engineered Safety Features Filter Systems

The filter systems required to perform safety-related functions following a design basis accident are:

(1) Standby Gas Treatment System (SGTS)

(2) Control room portion of the HVAC System (HVAC)

The control room portion of the HVAC System is discussed in Section 6.4 and Subsection 9.4.1. The SGTS is discussed in this subsection (6.5.1).

6.5.1.1 Design Basis

6.5.1.1.1 Power Generation Design Basis

The SGTS has the capability to filter the gaseous effluent from the primary containment or from the secondary containment when required to limit the discharge of radioactivity to the environment to meet 10CFR100 requirements.

6.5.1.1.2 Safety Design Basis

The SGTS is designed to filter radiological effluents from the primary containment that leak into the Secondary Containment during design basis accidents. These include:

(1) Major pipe breaks within primary containment.

(2) Refueling operation radioactive releases.

(3) Major reactor core transients which may result in fuel failure.

The SGTS is not required for pipe breaks outside primary containment.

The SGTS is designed to accomplish the following:

(1) Maintain a negative pressure in the secondary containment, relative to the outdoor atmosphere, to control the release of fission products to the environment.

(2) Filter airborne radioactivity (halogen and air particulates) in the effluent to reduce offsite doses to within the limits specified in 10CFR100.

(3) Ensure that failure of any active component, assuming loss of offsite power, cannot impair the ability of the system to perform its safety function.

(4) Remain intact and functional in the event of a safe shutdown earthquake (SSE).

(5) Meet environmental qualification requirements established for system operation.

(6) Filter airborne radioactivity (halogens and particulates) in the effluent to reduce offsite doses during normal and upset operations to within the limits of 10CFR20.

6.5.1.2 System Design

6.5.1.2.1 General

The SGTS P&ID is provided as Figure 6.5-1.

6.5.1.2.2 Component Description

Table 6.5-1 provides a summary of the major SGTS components. The SGTS consists of two parallel and redundant filter trains. The two SGTS trains are located in two adjacent rooms. Each train is protected for fire, flood, inside containment pipe break and missiles. The electrical separation is provided by connecting the two trains to Divisions 2 and 3 electric power. The two trains are mechanically separated also. Suction is taken from the secondary containment, including above the refueling area, or from the primary containment via the Atmospheric Control System (ACS). The treated discharge goes to the main plant stack. Major SGTS equipment is located within the Secondary Containment boundary.

The SGTS consists of the following principal components:

Two filter trains, each consisting of a of a moisture separator, an electric process heater, a prefilter, a high efficiency particulate air (HEPA) filter, a charcoal adsorber, a second HEPA filter, space heater unit with fan, a process fan, and a cooling fan for the removal of decay heat from the charcoal.The process fans are located downstream of each filter train.

6.5.1.2.3 SGTS Operation

6.5.1.2.3.1 Automatic

Upon receipt of a high drywell pressure signal or a low reactor water level signal, or when high radioactivity is detected in the secondary containment or refueling floor ventilation exhaust, both SGTS trains are automatically actuated and one train is manually placed in the Standby mode. When the operation of both the trains is assured, one train is placed in the Standby mode. In the event that a malfunction disables an operating train, the standby train is automatically initiated.

6.5.1.2.3.2 Manual

The SGTS is on standby during normal plant operation. It may be manually initiated for primary containment de-inerting in accordance with the Technical Specifications when required to limit the discharge of contaminants to the environment within 10CFR20 limits. Normal operation of the SGTS while the plant is in the startup, power, hot standby, and hot shutdown modes of operation is much less than 90 hours per year for both trains combined. However, if 90 hours

of operation per year for either train (excluding tests) is to be exceeded, the COL applicant is required to demonstrate that the SGTS is capable of performing its intended function in the event of LOCA. See Subsection 6.5.5.2 for COL license information. A single train may be manually initiated for surveillance testing.

6.5.1.2.3.3 Decay Heat Removal

Cooling of the SGTS filters may be required to prevent the gradual accumulation of decay heat in the charcoal. This heat is generated by the decay of radioactive iodine adsorbed on the SGTS charcoal. The charcoal is typically cooled by the air from the process fan. If the process fan is tripped or the other SGTS train placed into operation, the cooling fan will maintain air flow through the charcoal. The system valving will remain open during this sequence.

A water deluge capability is also provided, but primarily for fire protection, since redundant fans are provided for air cooling. Since the deluge is available, it may also be used to remove decay heat for sequences outside the normal design basis. Temperature instrumentation is provided for control of the SGTS process and space electric heaters. This instrumentation may also be used by the operator to [re-]establish a cooling air flow post-accident, if required.

Water is supplied from the fire protection system and is connected to the SGTS via a spool piece.

6.5.1.3 Design Evaluation

6.5.1.3.1 General

(1) A negative pressure of 6.4 mm water gauge is normally maintained in the secondary containment by the Reactor Building/Secondary Containment HVAC System (Subsection 9.4.5) relative to the outdoor atmosphere. All the surrounding clean areas are maintained at positive pressure with respect to secondary containment. On SGTS initiation (Subsection 6.5.1.2.3.1), the Reactor Building/Secondary Containment HVAC is automatically isolated.

(2) The SGTS filter particulate and charcoal efficiencies are outlined in Table 6.5-1. Dose analyses of events requiring SGTS operation (Subsections 15.6.5 and 15.7.4) indicate that offsite doses are within the limits established by 10CFR100.

(3) The SGTS is designated as an engineered safety feature (ESF) since it mitigates the consequences of postulated design basis accidents by controlling and reducing the release of radioactivity to the environment. The SGTS, except for the deluge, is designed and built to the requirements for Safety Class 3 equipment as defined in Section 3.2, and 10CFR50, Appendix B.

The SGTS has independent, redundant active trains. The two SGTS trains are mechanically and electrically separated. They are located in two side by side

compartments (separated by rated fire barriers) inside secondary containment and adjacent to the normal HVAC system exhaust. Should any active train fail, SGTS functions can be performed by the redundant train. Each redundant train is powered from separate Class 1E electrical buses.

(4) The SGTS is designed to Seismic Category I requirements as specified in Section 3.2. The SGTS is housed in a Category I structure. All surrounding equipment, components, and supports are designed to appropriate safety class and seismic requirements.

(5) A secondary containment draw-down analysis will be performed to demonstrate the capability of the SGTS to maintain the design negative pressure following a LOCA, including inleakage from the open, non-isolated penetration lines identified during construction engineering and in the event of the worst single failure of a secondary isolation valve to close. See Subsection 6.5.5 for COL license information requirements.

(6) The SGTS is designed as an Engineered Safety Feature (ESF) to mitigate the consequences of postulated pipe breaks inside primary containment and the refueling operation fuel bundle drop accident. The SGTS is not required to operate during or after breaks outside primary containment either in the secondary containment, the main steam tunnel or the Turbine Building.

6.5.1.3.2 Sizing Basis

Figure 6.5.2 provides an assessment of the secondary containment pressure after the design basis LOCA inside primary containment, assuming an SGTS fan capacity of 6800 m^3/h (21°C, 1 atmosphere) per fan. Credit for secondary containment as a fission product control system is only taken if the secondary containment is actually at a negative pressure by considering the potential effect of wind on the ambient pressure in the vicinity of the Reactor Building. For the ABWR dose analysis, direct transport of containment leakage to the environment was assumed for the first 20 minutes after LOCA event initiation (in addition to the leakage through the MSIVs to the main turbine condenser). Each SGTS fan was sized to individually establish a continuously negative differential pressure (considering the effect of wind) within 10 minutes after SGTS initiation. The dose analysis therefore assumes direct leakage from the containment to the environs for twice the required period. In addition, it should be recognized that fission product release on the order of that specified in Regulatory Guide 1.3 and used in the LOCA dose analyses (Subsection 15.6.5) realistically requires significant core damage and most likely more than 10 or 20 minutes for transport to and leakage from the primary containment.

The calculation accounted for all expected heat sources in secondary containment after a LOCA inside primary containment. Where appropriately conservative, a realistic basis was used to determine the heat loads. For example, no single failure of a diesel was assumed, since it is likely that all divisions of power would be available. Failure of one SGTS fan to start was

assumed as the single failure. Therefore, heat loads from all divisions of ECCS motors and piping were used in the calculation.

Per SRP 6.2.3, II.3(b) and SRP 6.5.3, II.2, secondary containment should be held below –6.4 mm w.g. under all wind conditions up to the wind speed at which diffusion becomes great enough to assure site boundary exposures less than those calculated for DBAs, even if ex-filtration occurs (i.e., no credit for SGTS is taken). For the ABWR, dispersion factors were calculated for each stability class over a range of wind speeds. Above 8.0 m/s, stability class D predominates and conservatively bounds observed meteorological conditions. At 8.9 m/s, above the 8.0 m/s stability class D transition, the dispersion from the increased wind speed results in offsite doses equal to or lower than the design basis calculation, which assumes the most stable, F-class stability and a 1 m/s wind speed. Therefore, the ABWR SGTS was designed to establish and maintain a negative pressure in secondary containment within 10 minutes for any wind speed up to and including 8.9 m/s.

6.5.1.3.3 SGTS Filter Train

The SGTS filter train, consisting of a demister, process heater, pre-filter, two HEPA filters, and an iodine adsorber, is considered active, and in practice provides the reliability associated with a passive component. Furthermore, the ABWR SGTS has incorporated design features to eliminate potential failures or improper operation. These features include:

(1) The advanced design of the filter housing and flow pattern virtually eliminates any untreated bypass of the filter. In addition, the all-welded design is such that degradation of filter housing integrity is not likely to occur during system standby or operation.

(2) A number of operating plant events (during normal plant operation) have occurred causing the inadvertent deluge wetting of the charcoal. These events have rendered the filter train unavailable for safety service. These events have been observed to warrant an improved deluge design concept. These unintended deluge operations have been caused by personnel error and by failures in mechanical or electrical components. In the ABWR design, the deluge piping is not connected permanently from the fire protection system to the filter housing nozzle. Instead, a normally disconnected hose from the fire protection system is provided to act as a “spool piece” for connection by operating personnel to the filter housing, as required.

(3) Decay heat is not sufficient to cause a fire in the charcoal adsorber or HEPA filter. Calculations indicate that air flow from the process fan is more than enough to remove the heat from decay of the radioactive iodine on the charcoal or filters. Heating does not occur sufficient to cause iodine desorption or ignition of the charcoal. With the reduced source term expected for most sequences [Subsection 6.5.1.3.3(4)], any heating of the charcoal is even further reduced. Tripping or failure of the process fan will result in the auto operation of the cooling

fan and the operation of the other SGTS train. The cooling fan operation will preclude charcoal heatup. No other mechanism for starting a fire in the filter housing during an accident has been identified. Other possible sequences for starting a fire in the filter train could occur during normal plant operation or plant shutdown. These sequences would involve an unspecified maintenance or operating personnel activity or an incredible malfunction of the space heaters. In this case, a fire in the SGTS charcoal, like in the Offgas System, would be a matter of plant availability and not of plant safety. The space heaters, located inside the SGTS filter housing, are powered only during SGTS standby and not during system operation. Therefore, the space heaters are not a potential cause of fire (and SGTS unavailability) when the SGTS is required to meet the licensing-basis release limits (and presumably inaccessible for repair).

Note that the space heaters each have a small fan which better distributes the heat and minimizes local warming by providing a more uniform temperature throughout the filter housing. This uniform heating further reduces the risk of fire by lowering local temperatures around the space heater and by improving the accuracy of the temperature measurements (used to detect high temperature) taken at necessarily discrete points within the filter housing.

(4) Degradation of the charcoal effectiveness between charcoal efficiency surveillance tests is not likely to occur. During normal operation, the filter is isolated, and dampers upstream and downstream of the filter train are closed. Therefore, during SGTS standby, the potential for impurities entering the filter train and unacceptably reducing charcoal efficiency is small.

The ABWR SGTS charcoal bed thickness has been increased 5 cm to 15 cm as compared to the GESSAR II design. The additional 5 cm of charcoal provide an effective measure of protection against weathering or aging effects when the SGTS is placed into operation.

In addition to the increased charcoal bed depth, significantly more charcoal is provided than is required to meet the 2.5 mg iodine per gram carbon requirement. This added charcoal is used to meet the requirement specifying a residence time of 0.25 s per 5 cm of bed depth. Approximately 332 kg of charcoal is required based on iodine loading calculated per Regulatory Guide 1.3 requirements, a 100% efficient charcoal adsorber, and no MSIV leakage. The SGTS charcoal adsorber is required to meet a 732 m/h face velocity, which results in a nominal 794 kg of charcoal assembly using a conservatively high 561kg/m^3 charcoal density with 6800 m^3/h fan size, meeting the 0.25 s per 5 cm of bed depth (732 m/h) requirement of Regulatory Guide 1.52 (Position C.3.i), and using a conservatively high 561kg/m^3 charcoal density. The weight of charcoal will be adjusted to be consistent with the purchased

charcoal density (usually less than 481 kg/m^3) and any dead space in the adsorber section itself.

The effect of suppression pool scrubbing (per SRP 6.5.5) also serves to reduce the actual source term, providing capacity margin over the design basis calculation. Reasonable scrubbing factors of just 10 for elemental and particulate iodine results in only 45 kg of charcoal being required versus the nominal 794 kg provided. This margin between the charcoal realistically required and that needed per the design basis provides additional protection against any aging or weathering that may occur. The retention of iodine in the suppression pool is discussed in NUREG-0772 and NUREG-1169, which established the basis for the ABWR design under Paragraph 8.9 of the Licensing Review Basis. (Reference 6.5-1). IE Bulletin No. 80-03 (issued on February 6, 1980) concerns the potential loss of charcoal from adsorber cells due to wide spacing between the rivets which secure the screen to the casing. The ABWR design does not use rivets. Instead the design utilizes a welded design construction which would prevent the loss of charcoal.

(5) Because of the high availability of the ABWR, de-inerting and the potential use of the SGTS during de-inerting will occur primarily at the end of the fuel cycle. In this way, HEPA filter and charcoal adsorber effectiveness will be tested, and the filter and/or charcoal replaced, if necessary, before the plant returns to power operation.

All active SGTS components are redundant. Non-safety space heaters are located both upstream and downstream of the charcoal bed. Divisional power is used for reliable space heater operation.

6.5.1.3.4 Source Terms for SGTS Design

The basis for calculating the iodine source term for the SGTS filters is provided in Table 6.5-2. For the purposes of sizing the SGTS charcoal adsorber, no additional credit for iodine retention or holdup above that specified in Regulatory Guide 1.3 is assumed. Charcoal sizing is discussed in Subsection 6.5.1.3.3(4).

6.5.1.3.5 Compliance with Regulatory Guide 1.52

An assessment of compliance with Section C of Regulatory Guide 1.52, including testing, is provided in Appendix 6A.

6.5.1.3.6 Primary Containment Purging

The SGTS may be used either for DBAs identified in Chapter 15 or during de-inerting of the primary containment prior to plant shutdown. The more likely, though still infrequent, potential use of SGTS is during de-inerting. Depending on indications from Leak Detection and Isolation System (LDS) primary containment radiation monitoring before de-inerting is initiated or from

the process radiation monitoring (PRM) Reactor Building ventilation exhaust radiation monitors during de-inerting, SGTS may be placed into service.

If purging (i.e., de-inerting) through the HVAC will [or does] result in a trip from the ventilation exhaust radiation monitors, then de-inerting will be [re-]initiated at a reduced rate through the SGTS. Use of SGTS during de-inerting is expected to be infrequent.

The design basis condition for the relevant dose analyses assumes that the Primary Containment large ventilation butterfly valves are closed, because the probability of a LOCA occurring at the same time the ventilation valves are open is very small. The large ventilation valves are, in fact, closed throughout normal plant operation except during inerting and de-inerting. The LOCA dose analyses do not assume any release from open containment isolation dampers, either through the SGTS or through the normal ventilation system.

The operators will be sized with adequate thrust to demonstrate the acceptability of the damper design to provide isolation. Furthermore, the butterfly valves used in the vent and purge lines are specified to be hinged neutrally or slightly biased in the direction that will assist the damper in sealing when exposed to differential pressure. If the valves are open for containment purge, they will receive an isolation signal to close on low reactor water level (L3) or high drywell pressure. These isolation signals are not bypassed in this mode of operation.

A realistic assessment of plant capability in support of the exclusion indicates that the ventilation valves, if open, would be isolated before significant fission products are transported to the containment atmosphere. “Significant” means fission products above that normally present in the primary system. A period much longer than the closing time of the ventilation valves would be required to generate conditions leading to the release of TID 14844-like source terms. Therefore, should a LOCA occur when the ventilation valves are open (dampers expected to be open only during inerting or de-inerting), little fission product release to the environment would actually occur. Therefore, the plant design and analysis in this regard is conservative and bounds releases actually expected in the event of a LOCA.

An analysis was performed to study the Reactor containment condition around 15% power point during ascension to power and while shutting down. Analysis indicates that risk increases only by 2.4% assuming the butterfly valve to fail to close. Refer to Section 19D.13 - Risk Associated with LOCA During Containment Venting and Purging.

6.5.1.4 Tests and Inspection

The SGTS and its components are periodically tested during construction and operation. These tests fall in three categories:

(1) Environmental qualification tests

(2) Acceptance tests as defined in ASME N509 and N510

(3) Periodic surveillance tests

The above tests are performed in accordance with the objectives of Regulatory Guide 1.52 and its references. Acceptance tests (including pre-operational tests) and periodic surveillance tests are defined and extensively described in ASME N509 and ASME N510. Testing requirements in ASME N509 are generally located in Section 5, "Components." ASME N510 provides details of each component functional test. These tests are summarized in Table 9-1 of ASME N509 and Table 1 of ASME N510. Specific surveillance testing requirements for SGTS are provided in Technical Specification 3.6.4.3 (Chapter 16). Environmental qualification testing is discussed in Section 3.11 and is applicable to SGTS components. Dynamic qualification is addressed in Sections 3.9 and 3.10 for Seismic Category I equipment.

6.5.1.5 Instrumentation

Appendix 6B provides a discussion of the instrumentation for the SGTS. Control and instrumentation for the SGTS is also discussed in Subsections 7.3.1.1.5 and 7.3.2.5.

6.5.1.6 Materials

The construction materials used for the SGTS are compatible with normal and accident environments postulated for the area in which the equipment is located. The construction materials used in the dryer and filter trains are consistent with the recommendations of Regulatory Guide 1.52 and its references.

6.5.1.7 Operability and Effectiveness

Efficiency in the usual sense, cannot be measured for adsorption systems. Adsorption is time dependent and therefore instantaneous containment-removal efficiency is meaningless. True efficiency tests are run on small, representative samples (test canisters) of the adsorbent using a radioactivity tagged tracer gas having similar properties and composition of those of the containment of interest (e.g., radioactive elemental iodine or methyl iodine). Because of the difficulty in handling radioactive materials, this type of test is generally not made in the field. The in-place field tests of installed systems are leak tests only. The iodine removal efficiency tests are carried out in a laboratory duplicating the field conditions as closely as possible.

The double filter train design for the SGTS depends on stationary components for normal (Routine) and accident operation. The pre-filter assembly is filled with glass fibers as are the pre and after HEPA filters. The charcoal iodine adsorber bed is located between the HEPA filters. All are located in a welded housing making up the filter train. The redundant active space heaters and fans operate only in the standby mode of the SGTS to dry the charcoal and maintain low relative humidity in the sealed train. Readiness for design operation is assured by effective surveillance tests.

The filter train availability depends on the stationary components replacement. The filter fiber glass sections are modularized for ease in handling. The charcoal is replaced by dumping old

charcoal from below the bed and refilling with new charcoal from above. The integrity of the charcoal bed structure is maintained by limiting the moisture content of the charcoal in standby. The charcoal bed is oversized to reduce heating and weathering or aging effects. The bed has nominally 794 kg of charcoal and is 150% thick over the calculated 332 kg required for adequate adsorber saturation and combustion protection.

Per Regulatory Guide 1.52 Section 4d, each filter train should be operated at least 10 hours per month, with the heaters on, in order to reduce the buildup of moisture on the adsorbers and HEPA filters. The flow element in the filter train flow path and related recorders supply the operating and standby time measurement to assure timely surveillance testing. Charcoal penetration tests are conducted after 720 hours of system operation. Penetration and bypass leakage test are run every 18 months for the systems maintained in a standby status and following painting, fire or chemical release in the service area and after adsorbent replacement. Surveillance includes functional operation and pressure drop measurements. Technical specifications are satisfied and a single failure for any stationary component is very remote.

The SGTS may be used during de-inerting of the primary containment prior to plant shutdown. Of all the routine operational use of the SGTS, the more likely, though still infrequent, potential use of SGTS is during de-inerting. Because of the high availability of the ABWR, de-inerting and the potential use of SGTS during de-inerting will occur primary at the end of the fuel cycle. In this way, HEPA filter and charcoal adsorber effectiveness will be tested, and the filter and/or charcoal replaced, if necessary, before the plant returns to full power.

General Electric reviewed the data obtained from operating power plants. It is GE's opinion that an effective surveillance testing and prompt stationary parts replacement is an effective way to assure the availability of the SGTS for the designed operation.

The data for the Perry Nuclear power plant which has five filter trains with activated charcoal; two in the M15 Annulus Exhaust Gas Treatment System (AEGTS) which operate continuously and three in the M40 Fuel Handling Building (FHB) ventilation system was requested. The surveillance testing results of the two systems one each from AEGTS-M15 and FHB-M40 were provided. The M15 data shows that the charcoal bed replacement was necessitated after nearly four years of continuous operation and bypass failure of the HEPA filters for train B occurred only once in six years of operation. The M26 data shows that in five years time only one charcoal bed had to be replaced due to an inadvertant deluge. Current ABWR SGTS does not have an automatic deluge system and an inadvertent operation of the deluge system is unlikely.

The SGTS data from 1971 to 1991 for the Quad cities Nuclear Power was reviewed. For train B, charcoal bed replacement was needed in 1979, 1983 and 1987. The bypass leakage occurred rarely and HEPA filters replacement was needed. Train A needed charcoal bed replacement in 1984 and 1990.

The availability and reliability of the SGTS to perform the designed function depend on effective surveillance testing and prompt replacement of inefficient parts. Should the LOCA

occur when the SGTS is in between surveillance testing period with the probability that the next surveillance test may indicate the need of the charcoal bed replacement, the process radiation monitoring system will alarm if there is any radiation leaking out and the operator can switch to the second (redundant) SGTS filter train. Probability of both the SGTS filters trains failing at the same time is very remote.

6.5.2 Containment Spray Systems

Credit is not taken for any fission product removal provided by the drywell/wetwell spray portions of the RHR System.

6.5.3 Fission Product Control Systems

Fission product control systems are provided in conjunction with other ESF systems to limit the release of radioactive material from the containment to the environment following postulated design basis breaks inside containment and refueling operation accident events. Dose analyses are provided in Chapter 15. The fission product control systems consist of the primary containment and the secondary containment. The following is a discussion of each fission product control system.

6.5.3.1 Primary Containment

The primary containment is a cylindrical steel-lined reinforced concrete structure forming a limited leakage boundary for fission products released to the containment atmosphere following a LOCA or other event. The containment is divided into the upper and lower drywells and the suppression chamber (wetwell) by the reinforced concrete diaphragm floor and the reactor vessel pedestal. The diaphragm floor is rigidly attached to the reactor pedestal and the containment wall. A liner is also provided as part of the diaphragm floor to prevent bypass of steam from the upper drywell to the suppression chamber air space during an accident. The primary containment is totally within the secondary containment. A test program confirms the integrity of the leakage boundary. The assumed leak rate from primary containment is 0.5% of the free containment volume per day measured at the containment design pressure.

Containment leak rate testing is described in Subsection 6.2.6. The primary containment walls, liner plate, mechanical penetrations, isolation valves, hatches, and locks function to limit release of radioactive materials, subsequent to postulated accidents, such that the resulting offsite doses are less than the guideline values of 10CFR100.

The structural design details of the primary containment are discussed in Subsection 3.8.2. Primary containment isolation valves are discussed in Subsection 6.2.4. The conditions in the containment during and after the design basis events are given in Section 6.2.

Layouts of the primary containment structure are given in the building arrangement drawings in Section 1.2.

The primary containment atmosphere is inerted with nitrogen by the Atmospheric Control System (ACS). The ACS is described in Subsection 6.2.5. Following the design basis LOCA, the Flammability Control System (FCS) controls the concentration of oxygen in containment. Oxygen is generated by the radiolytic decomposition of water.

On appropriate signals, containment isolation valves close as required. The primary containment provides a passive barrier to limit the leakage of airborne radioactive material. Systems required to accomplish ECCS or other ESF functions are not isolated. See Subsection 6.2.4 for further details of isolation valve closure signals.

6.5.3.2 Secondary Containment

The secondary containment is provided so that leakage from the primary containment is collected, treated and monitored by the SGTS prior to release to the environment. Refer to Subsection 6.2.3 for a description of the secondary containment boundary and Subsection 6.5.1 for a description of the SGTS.

6.5.4 Not Used

6.5.5 COL License Information

6.5.5.1 SGTS Performance

The COL applicant will perform a SGTS dose/functional damage and drawdown analysis in accordance with Subsections 6.5.1.2.3.2 and 6.5.1.3.1(5) respectively.

6.5.5.2 SGTS Exceeding 90 Hours of Operation Per Year

The COL applicant is required to demonstrate the SGTS system is capable of performing its intended function in the event of a LOCA, if more than 90 hours of operation per year (excluding test) for either train is anticipated.

6.5.6 References

6.5-1 Thomas E. Murley (NRC) letter to Ricardo Artigas (GE), August 7, 1987, “Advanced Boiling Water Reactor Licensing Review Bases”.

Table 6.5-1 Summary of Major Standby Gas Treatment System Components

Filter Train	
	Consists of a moisture separator, an electric process heater, prefilter, pre-HEPA filter, charcoal adsorber, post-HEPA filter and space electric heaters
Quantity	2
Capacity	6800 m^3/h(@21°C & 1 atmosphere pressure absolute)
Moisture Separator	
General	Woven wire, stainless steel mesh pads
Quantity	1 bank of standard size moisture separators per filter train
Efficiency	Per ASME N509, Section 5.4
Electric Process Heater	
General	Electric, finned tubular
Quantity	1 per filter train
Rating	5.3 kW minimum, 26.2 kW maximum
Relative humidity	
Inlet	*100% @ 66°C
Outlet	70% @ 75°C
Air ΔT	9°C
Prefilter	
General	Cartridge type
Quantity	1 bank of standard size filters per filter train
Media	Glass fiber
Efficiency	Per ASME N509, Section 5.3
HEPA Filters	
General	Vertically oriented
Quantity	Banks of standard size HEPA filters both upstream and downstream of charcoal adsorber per filter train
Media	Glass fiber
Efficiency	$\geq$99.97% with 0.3 micrometer DOP (shop test) $\geq$99.9% with 0.5 micrometer DOP (surveillance test)

Table 6.5-1 Summary of Major Standby Gas Treatment System Components (Continued)

Charcoal Adsorbers	
General	Vertically oriented deep beds
Quantity	1 per filter train
Efficiency	≥99.825% (laboratory) ≥99.95% (in-place bypass test)
Charcoal weight	794 kg
Depth of Bed	15 cm
Maximum Face velocity	732 m/h
Process Fan	
General	Centrifugal
Quantity	2
Capacity	6800 m^3/h(@ 21°C & 1 atmosphere pressure absolute)
Cooling Fan	
General	Centrifugal
Quantity	2
Capacity	700 m^3/h(@ 21°C & 1 atmosphere pressure absolute)

* Capacity of the heater is sufficient to reduce the relative humidity to ≤ 70% at any temperature ≤ 66°C

Table 6.5-2 Source Terms Used for SGTS Charcoal Adsorber Design

Source term assumed available for leakage from containment (Regulatory Guide 1.3):

- 100% of noble gases from fuel inventory
- 25% of iodine from fuel inventory

Chemical form of iodine assumed available for leakage from primary containment:

- 4% organics
- 91% elemental
- 5% particulates

Suppression pool iodine decontamination factor used in calculation:

- 1 for organics
- 1 for elemental
- 1 for particulates

Containment spray iodine decontamination factor used in calculation:

- 1 for organics
- 1 for elemental
- 1 for particulates

Leakage rates assumed for calculation:

- 0.50%/day for primary containment
- 50%/day for secondary containment
- $0 m^3/s$ @ Standard Condition through MSIVs

The following figure is located in Chapter 21:

Figure 6.5-1 Standby Gas Treatment System P&ID (Sheets 1–3

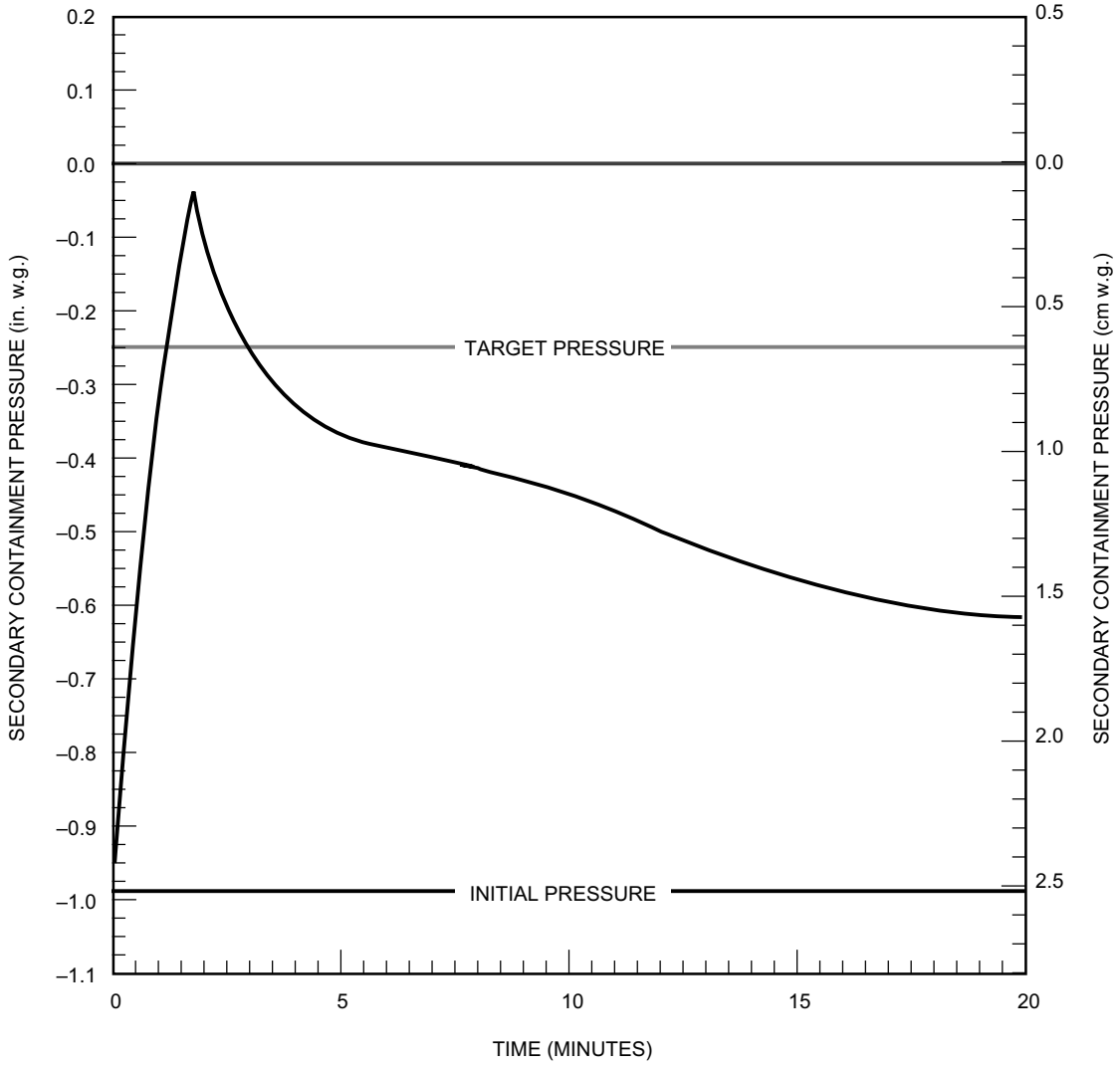

Figure 6.5-2 Secondary Containment Pressure Transient After Design Basis LOCA

6.6 Preservice and Inservice Inspection and Testing of Class 2 and 3 Components and Piping

This subsection describes the preservice and inservice inspection and system pressure test programs for Quality Groups B and C (i.e., ASME Code Class 2 and 3 items*, respectively). It describes those programs implementing the requirements of ASME B&PV Code Section XI, Subsections IWC and IWD. The requirements for subsequent inservice inspection intervals are addressed in Subsection 5.3.3.7.

The development of the preservice and inservice inspection program plans will be the responsibility of the COL applicant and will be based on ASME Code Section XI, Edition and Addenda specified in accordance with 10CFR50, Section 50.55a. Designing components for preservice and inservice inspection is the responsibility of the COL applicant. The COL applicant will be responsible for specifying the Edition of ASME Code Section XI to be used, based on the procurement date of the component per 10CFR50, Section 50.55a. The ASME Code requirements discussed in this section are provided for information and are based on the 1989 Edition of the ASME Section XI. See Subsection 6.6.9.1 for COL license information requirements.

6.6.1 Class 2 and 3 System Boundaries

The Class 2 and 3 system boundaries for both preservice and inservice inspection programs and the system pressure test program include applicable items within Boundary 3 and Boundary 4 on the piping and instrumentation drawings (P&IDs). Those system boundaries include all or part of the following:

(1) Main steam System

(2) Feedwater System

(3) Reactor Core Isolation Cooling System

(4) High Pressure Core Flooder System

(5) Standby Liquid Control System

(6) Residual Heat Removal System

(7) Reactor Water Cleanup System

(8) Control Rod Drive System

(9) Not Used

* Items as used in this Section are products constructed under a Certificate of Authorization (NCA-3120) and material (NCA-1220). See Section III, NCA-1000, footnote 2.

(10) Purified makeup water system

(11) Atmospheric Control System

(12) Not Used

(13) HVAC normal cooling water system

(14) Not Used

(15) Not Used

(16) Not Used

(17) Reactor Building Cooling Water System

(18) Not Used

(19) Fuel Pool Cooling and cleanup System

(20) Reactor Service Water System

6.6.1.1 Class 2 System Boundary Description

Those portions of the systems listed in Subsection 6.6.1 within the Class 2 boundary, based on Regulatory Guide 1.26, for Quality Group B, are as follows:

(1) Portions of the reactor coolant pressure boundary (RCPB) as defined in Subsection 5.2.4.1.1, but which are excluded from the Class 1 boundary pursuant to Subsection 5.2.4.1.2.

(2) Systems or portions of systems important to safety that are designed for reactor shutdown or residual heat removal.

(3) Portions of the steam systems extending from the outermost containment isolation valve up to but not including the turbine stop and bypass valves and connected piping up to and including the first valve that is either normally closed or capable of automatic closure during all modes of normal reactor operation.

(4) Systems or portions of systems that are connected to the RCPB and are not capable of being isolated from the boundary during all modes of normal reactor operation by two valves, each of which is normally closed or capable of automatic closure.

(5) Systems or portions of systems important to safety that are designed for (1) emergency core cooling, (2) post-accident containment heat removal, or (3) post-accident fission product removal.

Items (1) through (5) above describe the Class 2 boundary only and are not related to exemptions from inservice examinations under ASME Code Section XI rules. The Class 2 components exempt from inservice examinations are described in ASME Code Section XI, Subsection IWC-1220.

6.6.1.2 Class 3 System Boundary Description

Those portions of the systems listed in Subsection 6.6.1 within the Class 3 boundary, based on Regulatory Guide 1.26, for Quality Group C, are not part of the RCPB but are as follows:

(1) Cooling water systems or portions of cooling water systems important to safety that are designed for emergency core cooling, post-accident containment heat removal, post-accident containment atmosphere cleanup, or residual heat removal from the reactor and from the spent fuel storage pool (including primary and secondary cooling systems). Portions of these systems that are required for their safety functions and that do not operate during any mode of normal operation and cannot be tested adequately, however, are included in Class 2.

(2) Cooling water and seal water systems or portions of these systems important to safety that are designed for functioning of components and systems important to safety.

(3) Systems or portions of systems that are connected to the RCPB and are capable of being isolated from that boundary during all modes of normal reactor operation by two valves, each of which is normally closed or capable of automatic closure.

(4) Systems other than radioactive waste management systems, not covered by items (1), (2) and (3) above, that contain or may contain radioactive material and whose postulated failure would result in conservatively calculated potential offsite doses (Regulatory Guides 1.3 and 1.4), that exceed 0.5 rem to the whole body or its equivalent to any part of the body.

Items (1) through (4) above describe the Class 3 boundary only and are not exemptions from inservice examinations under ASME Code Section XI rules. The Class 3 components exempt from inservice examinations are described in ASME Code Section XI, IWD-1220.

6.6.2 Accessibility

All items within the Class 2 and 3 boundaries are designed to provide access for the examinations required by IWC-2500 and IWD-2500. Responsibility for designing components for accessibility for preservice and inservice inspection is the responsibility of the COL applicant. See Subsection 6.6.9.2 for COL license information requirements.

6.6.2.1 Class 2 RHR Heat Exchangers

The physical arrangement of the residual heat removal (RHR) heat exchangers shall be conducive to the performance of the required ultrasonic and surface examinations. The RHR

heat exchanger nozzle-to-shell welds will be 100% accessible for preservice inspection during fabrication but might have limited areas that will not be accessible from the outer surface for inservice examination techniques. However, the inservice inspection program for the RHR heat exchanger is the responsibility of the COL applicant, and any inservice inspection program relief request will be reviewed by the NRC staff based on the Code Edition and Addenda in effect and inservice inspection techniques available at the time of COL application. Removable thermal insulation is provided or those welds and nozzles selected for frequent examination during the inservice inspection. Platforms and ladders are provided as necessary to facilitate examination.

6.6.2.2 Class 2 Piping, Pumps Valves and Supports

Physical arrangement of piping pumps and valves provide personnel access to each weld location for performance of ultrasonic and surface (magnetic particle or liquid penetrant) examinations and sufficient access to supports for performance of visual, VT-3, examination. Working platforms are provided in some areas to facilitate servicing of pumps and valves. Removable thermal insulation is provided on welds and components which require frequent access for examination or are located in high radiation areas. Welds are located to permit ultrasonic examination from at least one side, but where component geometries permit, access from both sides is provided.

Restrictions: For piping systems and portions of piping systems subject to volumetric and surface examination, the following piping designs are not used:

(1) Valve to valve

(2) Valve to reducer

(3) Valve to tee

(4) Elbow to elbow

(5) Elbow to tee

(6) Nozzle to elbow

(7) Reducer to elbow

(8) Tee to tee

(9) Pump to valve

Straight sections of pipe and spool pieces shall be added between fittings. The minimum length of the spool piece has been determined by using the formulate
$L = 2T + 15.24$ cm, where L equals the length of the spool piece (not including weld preparation) and T equals the pipe wall thickness (cm).

6.6.3 Examination Categories and Methods

6.6.3.1 Examination Categories

The examination category of each item is listed in Table 6.6-1, which is provided as an example for the preparation of preservice and inservice program plans. The items are listed by system and line number, where applicable. Table 6.6-1 also states the method of examination for each item.

For preservice examination, all of the items selected for inservice examination shall be performed once in accordance with ASME Section XI, IWC-2200 and IWD-2200, with the exception of the examinations specifically excluded by ASME Section XI from preservice requirements, such as the visual VT-2 examinations for Category C-H, D-A, D-B and D-C.

6.6.3.2 Examination Methods

6.6.3.2.1 Visual Examination

Visual examination methods (VT-2 and VT-3), shall be conducted in accordance with ASME Section XI, IWA-2210. In addition, VT-2 examinations shall also meet the requirements of IWA-5240.

At locations where leakages are normally expected and leakage collection systems are located (e.g., valve stems and pump seals), the visual (VT-2) examination shall verify that the leakage collection system is operative.

Piping runs shall be clearly identified and laid out such that insulation damage, leaks and structural distress will be evident to a trained visual examiner.

6.6.3.2.2 Surface Examination

Magnetic Particle and Liquid Penetrant examination techniques shall be performed in accordance with ASME Section XI, IWA-2221 and IWA-2222, respectively. For direct examination access for magnetic particle (MT) and penetrant (PT) examination, a clearance (of at least 60.96 cm of clear space) is provided, where feasible, for the head and shoulders of a man within a working arm's length (50.8 cm) of the surface to be examined. In addition, access shall be provided as necessary to enable physical contact with the item as necessary to perform the examination. Remote MT and PT generally are not appropriate as a standard examination process; however, borescopes and mirrors can be used at close range to improve the angle of vision. As a minimum, insulation removal shall expose the area of each weld plus at least 15.24 cm from the toe of the weld on each side. Insulation will generally be removed 40.64 cm on each side of the weld.

6.6.3.2.3 Volumetric Ultrasonic Examination

Volumetric ultrasonic examination shall be performed in accordance with ASME Section XI, IWA-2232. In order to perform the examination, visual access to place the head and shoulder

within 50.8 cm of the area of interest shall be provided where feasible. A distance of 22.86 cm between adjacent pipes is sufficient spacing if there is free access on each side of the pipes. The transducer dimension has been considered: a 3.81 cm diameter cylinder, 7.62 cm long, placed with the access at a right angle to the surface to be examined. The ultrasonic examination instrument has been considered as a rectangular box 30.48 x 30.48 x 50.8 cm located within 12.2 m from the transducer. Space for a second examiner to monitor the instrument shall be provided, if necessary.

Insulation removal for inspection is to allow sufficient room for the ultrasonic transducer to scan the examination area. A distance of 2T plus 15.24 cm , where T is the pipe thickness, is the minimum required on each side of the examination area. The insulation design generally leaves 40.64 cm on each side of the weld, which exceeds minimum requirements.

6.6.3.2.4 Alternative Examination Techniques

As provided by ASME Section XI, IWA-2240, alternative examination methods, a combination of methods, or newly developed techniques may be substituted for the methods specified for a given item in this section, provided that they are demonstrated to be equivalent or superior to the specified method. This provision allows for the use of newly developed examination methods, techniques, etc., which may result in improvements in examination reliability and reductions in personnel exposure.

6.6.3.2.5 Data Recording

Manual data recording will be performed where manual ultrasonic examinations are performed. If automated systems are used, electronic data recording and comparison analyses are to be employed with automated ultrasonic examination equipment. Signals from each ultrasonic transducer would be fed into a data acquisition system in which the key parameters of any reflectors will be recorded. The data to be recorded for manual and automated methods are:

(1) Location

(2) Position

(3) Depth below the scanning surface

(4) Length of the reflector

(5) Transducer data including angle and frequency

(6) Calibration data

The data so recorded shall be compared with the results of subsequent examinations to determine the behavior of the reflector.

6.6.3.2.6 Qualification of Personnel and Examination Systems for Ultrasonic Examination

Personnel performing examinations shall be qualified in accordance with ASME Section XI, Appendix VII. Ultrasonic examination systems shall be qualified in accordance with an industry accepted program for implementation of ASME Section XI, Appendix VIII.

6.6.4 Inspection Intervals

6.6.4.1 Class 2 Systems

The inservice inspection intervals for Class 2 systems will conform to Inspection Program B as described in ASME Code Section XI, IWC-2412. Except where deferral is permitted by Table IWC-2500-1, the percentages of examinations completed within each period of the interval shall correspond to Table IWC-2412-1. An example of the selection of Code Class 2 items and examinations to be conducted within the 10-year intervals are described in Table 6.6-1.

6.6.4.2 Class 3 Systems

The inservice inspection intervals for Class 3 systems will conform to Inspection Program B, as described in ASME Code Section XI, IWD-2412. Except where deferral is permitted by Table IWD-2500-1, the percentages of examinations completed within each period of the interval shall correspond to Table IWD-2412-1. An example of the selection of Code Class 3 items and examinations to be conducted within the 10-year intervals are described in Table 6.6-1.

6.6.5 Evaluation of Examination Results

Examination results will be evaluated in accordance with ASME Code Section XI, IWC-3000 for Class 2 components, with repairs based on the requirements of IWA-4000 and IWC-4000. Examination results will be evaluated in accordance with ASME Code Section XI, IWD-3000 for Class 3 components, with repairs based on the requirements of IWA-4000 and IWD-4000.

6.6.6 System Pressure Tests

6.6.6.1 System Inservice Test

As required by ASME Code Section XI, IWC-2500 for Category C-H and by IWD-2500 for Categories D-A, D-B and D-C, a system inservice test shall be performed in accordance with IWC-5221 on Class 2 systems, and IWD-5221 on Class 3 systems, which are required to operate during normal operation. The system inservice test shall include all Class 2 or 3 components and piping within the pressure retaining boundary and shall be performed once during each inspection period as defined in Tables IWC-2412-1 and IWD-2412-1 for Program B. For the purposes of the system inservice test of Class 2 systems, the pressure-retaining boundary is defined in Table IWC-2500-1, Category C-H, Note 7. For the purposes of the system inservice test for Class 3 systems, the system boundary is defined in Note 1 of Table IWD-2500-1, for Categories D-A, D-B and D-C. The system inservice test shall include a VT-2 examination in accordance with IWA-5240, except that, where portions of a system are

subject to system pressure tests associated with two different functions, the VT-2 examination shall only be performed during the test conducted at the higher of the test pressures. The system inservice test will be conducted at approximately the maximum operating pressure and temperature indicated in the applicable process flow diagram for the system as indicated in Table 1.7-1. The system hydrostatic test (Subsection 5.2.4.6.2), when performed, is acceptable in lieu of the system inservice test.

6.6.6.2 System Functional Test

As required by Section XI, IWC-2500 for Category C-H and by IWD-2500 for Categories D-A, D-B and D-C, a system functional test shall be performed in accordance with IWC-5221 on Class 2 systems, and IWD-5221 on Class 3 systems, which are not required to operate during normal operation but for which a periodic system functional test is performed. The system functional test shall include all Class 2 or 3 components and piping within the pressure-retaining boundary and shall be performed once during each inspection period as defined in Tables IWC-2412-1 and IWD-2412-1 for Program B. For the purposes of the system functional test of Class 2 systems, the pressure-retaining boundary is defined in Table IWC-2500-1, Category C-H, Note 7. For the purposes of the system functional test for Class 3 systems, the system boundary is defined in Note 1 of Table IWD-2500-1, Categories D-A, D-B and D-C. The system inservice test shall include a VT-2 examination in accordance with IWA-5240, except that, where portions of a system are subject to system pressure tests associated with two different functions, the VT-2 examination shall only be performed during the test conducted at the higher of the test pressures. The system functional test will be conducted at the nominal operating pressure and temperature indicated in the applicable process flow diagram for the functional test for each system as indicated in Table 1.7-1. The system hydrostatic test (Subsection 5.2.4.6.2), when performed, is acceptable in lieu of the system inservice test.

6.6.6.3 Hydrostatic Pressure Tests

As required by Section XI, IWC-2500 for Category B-P, the hydrostatic pressure test shall be performed in accordance with ASME Section IWC-5222 on all Class 2 components and piping within the pressure retaining boundary once during each 10-year inspection interval. For purposes of the hydrostatic pressure test, the pressure-retaining boundary is defined in Tables IWC-2500-1, Category C-H and IWD-2500-1 Categories D-A, D-B, and D-C. The system hydrostatic test shall include a VT-2 examination in accordance with IWA-5240.

6.6.7 Augmented Inservice Inspection

6.6.7.1 High-Energy Piping

All high-energy piping between the containment isolation valves are subject to the following additional inspection requirements:

All circumferential welds shall be 100% volumetrically examined each inspection interval as defined in Subsection 6.6.3.2.3. Further, accessibility, examination requirements and

procedures shall be as discussed in Subsections 6.6.2, 6.6.3 and 6.6.5, respectively. Piping in these areas shall be seamless, thereby eliminating all longitudinal welds.

6.6.7.2 Erosion-Corrosion

Piping systems determined to be susceptible to single-phase erosion-corrosion shall be subject to a program of nondestructive examinations to verify the system structural integrity. The examination schedule and examination methods shall be determined in accordance with the NUMARC program (or another equally effective program), as discussed in Generic Letter 89-08, and applicable rules of Section XI of the ASME Boiler and Pressure Vessel Code.

6.6.8 Code Exemptions

As provided in ASME Section XI, IWC-1220 and IWD-1220, certain portions of Class 2 and 3 systems are exempt from the volumetric and surface and visual examination requirements of IWC-2500 and IWD-2500. These portions of systems are specifically identified in Table 6.6-1.

6.6.9 COL License Information

6.6.9.1 PSI and ISI Program Plans

The COL applicant will develop PSI and ISI program plans as outlined in Section 6.6

6.6.9.2 Access Requirement

The COL applicant will incorporate plans for NDE during design and construction in order to meet all access requirements of the regulations (Subsection 6.6.2).

Table 6.6-1 Examination Categories and Methods

Quality Group	System Number	System Title	System Description	P&ID Diagram	Sec. XI Exam Cat.	Items Examined	Exam Method
B	B21	Nuclear Boiler	Piping from outboard MSIVs F009A,B,C & D up to turbine bypass and turbine isolation valves	Figure 5.1-3 sh. 3			
			700A-NB-024 Piping		C-F-2	Welds (Note 1)	UT, MT
			50A-NB-119 Piping				
			50A-NB-111 Piping				
			80A-NB-110 Piping				
			50A-NB-112 Piping				
			50A-NB-113 Piping				
			50A-NB-114 Piping				
			Valve body welds (MSIVs)		C-G	Welds (Note 2)	MT
			Integral attachments		C-C	Welds (Note 3)	MT
			Piping from outboard MSIVs F009A,B,C & D up to turbine bypass and turbine isolation valves	Figure 5.1-3 sh. 3			
			Bolting		C-D	Bolts, Studs (Note 4)	UT
			All pressure retaining components and piping		C-H	External Surfaces (Note 5)	VT-2

Table 6.6-1 Examination Categories and Methods (Continued)

Quality Group	System Number	System Title	System Description	P&ID Diagram	Sec. XI Exam Cat.	Items Examined	Exam Method
B	B21	Nuclear Boiler (Cont.)	Piping and component supports		F-A	Supports (Note 6)	VT-3
			Feedwater lines A & B from outermost isolation valves F003A & B up to and including valves F001A & B	Figure 5.1-3 sh. 4			
			550A-NB-002 Piping		C-F-2	Welds (Note 1)	UT, MT
			550A-NB-008 Piping				
			250A-NB-013 Piping				
			150A-NB-017 Piping				
			150A-NB-016 Piping				
			150A-NB-015 Piping				
			150A-NB-020 Piping				
			550A-NB-001 Piping				
			550A-NB-007 Piping				
			Integral attachments		C-C	Welds (Note 3)	MT
			Valve body welds		C-G	Welds (Note 2)	MT
			Bolting		C-D	Bolts, Studs (Note 4)	UT

Table 6.6-1 Examination Categories and Methods (Continued)

Quality Group	System Number	System Title	System Description	P&ID Diagram	Sec. XI Exam Cat.	Items Examined	Exam Method
B	B21	Nuclear Boiler (Cont.)	All pressure retaining components and piping		C-H	External surfaces (Note 5)	VT-2
			Piping and component supports		F-A	Supports (Note 6)	VT-3
			Piping from feedwater thermal sleeves D001A & B up to and including check valves F006A & B	Figure 5.1-3 sh. 4			
			250A-NB-013 Piping 150A-NB-017 Piping 150A-NB-016 Piping 150A-NB-020 Piping 150A-NB-019 Piping		C-F-2	Welds (Note 1)	UT, MT
			Integral attachments		C-C	Welds (Note 3)	MT
			All pressure-retaining components and piping		C-H	External Surfaces (Note 5)	VT-2
			Piping and component supports		F-A	Supports (Note 6)	VT-3
			All drain lines, equalizer lines, leakoff lines test connections, instrument lines 20A, 25A, 50A and 80A in diameter	Figure 5.1-3 sh. 2–8	Exempted per IWC-1222 (a),(c)		

Table 6.6-1 Examination Categories and Methods (Continued)

Quality Group	System Number	System Title	System Description	P&ID Diagram	Sec. XI Exam Cat.	Items Examined	Exam Method
B	B21	Nuclear Boiler (Cont.)	All pressure-retaining components and piping		C-H	External surfaces (Note 5)	VT-2
B	C41	SLC	All Class B piping 20A, 25A, 40A, 50A, 80A and 100A in diameter	Figure 9.3-1	Exempted per IWC-1222 (a),(b)		
			All pressure retaining components and piping		C-H	External surfaces (Note 5)	VT-2
			SLC storage tank		Exempted per IWC-1222 (c)		
			Tank		C-H	External surfaces (Note 5)	
B	C12	CRD	Charging water line, drain lines 32A and smaller	Figure 4.6-8 sh. 3	Exempted per IWC-1222 (a),(b)		
			All pressure-retaining components and piping		C-H	External surfaces (Note 5)	VT-2

Table 6.6-1 Examination Categories and Methods (Continued)

Quality Group	System Number	System Title	System Description	P&ID Diagram	Sec. XI Exam Cat.	Items Examined	Exam Method
B	E11	RHR	S/P suction lines from suction strainers through RHR pumps A,B & C through RHR HX's A,B & C up to and including injection valves F005A,B & C	Figure 5.4-10 sh. 2–7			
			450A-RHR-201 Piping		C-F-2	Welds	UT-MT
			450A-RHR-001 Piping				
			450A-RHR-101 Piping				
			450A-RHR-002 Piping				
			300A-RHR-003 Piping				
			300A-RHR-004 Piping				
			300A-RHR-005 Piping				
			450A-RHR-102 Piping				
			300A-RHR-102 Piping				
			300A-RHR-104 Piping				
			300A-RHR-105 Piping				
			450A-RHR-202 Piping				
			300A-RHR-203 Piping				
			300A-RHR-204 Piping				
			RHR heat exchangers		C-A	Welds	UT

Table 6.6-1 Examination Categories and Methods (Continued)

Quality Group	System Number	System Title	System Description	P&ID Diagram	Sec. XI Exam Cat.	Items Examined	Exam Method
B	E11	RHR (Cont)					
			RHR heat exchanger nozzles		C-B	Welds Inner radius	UT, MT
			Integral attachments		C-C	Welds (Note 3)	MT
			S/P suction lines from suction strainers through RHR pumps A,B & C through RHR HX's A,B & C up to and including injection valves F005A, B & C (Cont.)		C-H F-A		
			All pressure-retaining components and piping		C-H	External surfaces (Note 5)	VT-2
			Piping and component supports		F-A	Supports (Note 6)	VT-3
			Shutdown cooling suction lines from outermost isolation valves F011A,B & C up to and including connection to S/P suction lines	Figure 5.4-10 sh. 2, 3, 4, 6			
			350A-RHR-111 Piping 350A-RHR-011 Piping 350A-RHR-212 Piping		C-F-2	Welds (Note 1)	UT, MT
			Integral attachments		C-C	Welds (Note 3)	MT

Table 6.6-1 Examination Categories and Methods (Continued)

Quality Group	System Number	System Title	System Description	P&ID Diagram	Sec. XI Exam Cat.	Items Examined	Exam Method
B	E11	RHR (Cont.)					
			All pressure-retaining surfaces		C-H	External surfaces (Note 5)	VT-2
			Piping and component supports		F-A	Supports (Note 6)	VT-3
			RHR HX's A,B & C bypass lines including valves F013A,B & C	Figure 5.4-10 sh. 3, 4, 6			
			300A-RHR-213 Piping 300A-RHR-112 Piping 300A-RHR-012 Piping		C-F-2	Welds (Note 1)	UT, MT
			Integral attachments		C-C	Welds (Note 3)	MT
			All pressure-retaining components and piping		C-H	External surfaces (Note 5)	VT-2
			Piping and component supports		F-A	Supports (Note 6)	VT-3
			Test return lines from injection line connection through valves F008A, B & C up to the S/P	Figure 5.4-10 sh. 3, 4, 6			

Table 6.6-1 Examination Categories and Methods (Continued)

Quality Group	System Number	System Title	System Description	P&ID Diagram	Sec. XI Exam Cat.	Items Examined	Exam Method
B	E11	RHR (Cont.)	250-RHR-208 Piping		C-F-2	Welds (Note 1)	UT, MT
			250A-RHR-209 Piping				
			250-RHR-108 Piping				
			250-RHR-109 Piping				
			250-RHR-007 Piping				
			250-RHR-008 Piping				
			Integral attachments		C-C	Welds (Note 3)	MT
			All pressure-retaining components and piping		C-H	External surfaces (Note 5)	VT-2
			Piping and component supports		F-A	Supports (Note 6)	VT-3
			Piping connected downstream of RHR HXs A,B,C through valves F029A,B,C F030A,B,C up to and including header line to SPH	Figure 5.4-10 sh. 3, 4, 6			
			150A-RHR-128 Piping		C-F-2	Welds (Note 1)	UT, MT
			150A-RHR-230 Piping				
			150A-RHR-023 Piping				
			150A-RHR-129 Piping				
			150A-RHR-229 Piping				

Table 6.6-1 Examination Categories and Methods (Continued)

Quality Group	System Number	System Title	System Description	P&ID Diagram	Sec. XI Exam Cat.	Items Examined	Exam Method
B	E11	RHR (Cont.)	150A-RHR-022 Piping				
			Integral attachments		C-C	Welds (Note 3)	MT
			All pressure-retaining components and piping		C-H	External surfaces (Note 5)	VT-2
			Piping and component supports		F-A	Supports (Note 6)	VT-3
			Fuel pool suction lines to RHR from valves F016B & C up to and including connection to the shutdown cooling suction lines of RHR B & C	Figure 5.4-10 sh. 2			
			300A-RHR-215 Piping		C-F-2	Welds (Note 1)	UT, MT
			300A-RHR-114 Piping				
			Integral attachments		C-C	Welds (Note 3)	MT
			All pressure-retaining components and piping		C-H	External surfaces (Note 5)	VT-2
			Piping and component supports		F-A	Supports (Note 6)	VT-3

Table 6.6-1 Examination Categories and Methods (Continued)

Quality Group	System Number	System Title	System Description	P&ID Diagram	Sec. XI Exam Cat.	Items Examined	Exam Method
B	E11	RHR (Cont.)	RHR Loop A injection line from injection valve F005A up to and including feedwater line A thermal sleeve	Figure 5.4-10 sh. 3			
			250A-RHR-006 Piping		C-F-2	Welds (Note 1)	UT, MT
			Integral attachments		C-C	Welds (Note 3)	MT
			All pressure retaining		C-H	External surfaces (Note 5)	VT-2
			Component supports		F-A	Supports (Note 6)	VT-3
			RHR B & C drywell spray lines from discharge line connection up to and including drywell spray sparger	Figure 5.4-10 sh. 5, 7			
			300A-RHR-113 Piping		C-F-2	Welds (Note 1)	UT, MT
			250A-RHR-115 Piping				
			250A-RHR-116 Piping				
			300A-RHR-214 Piping				
			300A-RHR-216 Piping				
			300A-RHR-218 Piping				
			300A-RHR-219 Piping				

Table 6.6-1 Examination Categories and Methods (Continued)

Quality Group	System Number	System Title	System Description	P&ID Diagram	Sec. XI Exam Cat.	Items Examined	Exam Method
B	E11	RHR (Cont.)	300A-RHR-217 Piping				
			Integral attachments		C-C	Welds (Note 3)	MT
			All pressure-retaining components		C-H	External surfaces (Note 5)	VT-2
			Piping and component supports		F-A	Supports (Note 6)	VT-3
			Fuel pool suction lines to RHR from valves F016B & C up to and including connection to the shutdown cooling suction lines of RHR B & C	Figure 5.4-10 sh. 2			
			300A-RHR-215 Piping		C-F-2	Welds (Note 1)	UT, MT
			300A-RHR-114 Piping				
			Integral attachments		C-C	Welds (Note 3)	MT
			All pressure-retaining components and piping		C-H	External surfaces (Note 5)	VT-2
			Piping and component supports		F-A	Supports (Note 6)	VT-3

Table 6.6-1 Examination Categories and Methods (Continued)

Quality Group	System Number	System Title	System Description	P&ID Diagram	Sec. XI Exam Cat.	Items Examined	Exam Method
B	E11	RHR (Cont.)	Fuel pool return lines from drywell spray line header up to and including valves F015B & C	Figure 5.4-10 sh. 5, 7			
			300A-RHR-214 Piping 300A-RHR-113 Piping		C-F-2	Welds (Note 1)	UT-MT
			Integral attachments		C-C	Welds (Note 3)	MT
			All pressure-retaining components and piping		C-H	External surfaces (Note 5)	VT-2
			Piping and component supports		F-A	Supports (Note 6)	VT-3
			All class B piping 20A, 25A, 40A, 50A and 100A in diameter, i.e.: - drain lines - vent lines - makeup lines for water leg seal including fill pump - minimum flow bypass lines - instrument lines - sampling lines - wetwell spray lines - SRV discharge lines - equalizing lines - and etc.	Figure 5.4-10 sh. 2–6	Exempted per IWC-1221 (a),(c)		

Table 6.6-1 Examination Categories and Methods (Continued)

Quality Group	System Number	System Title	System Description	P&ID Diagram	Sec. XI Exam Cat.	Items Examined	Exam Method
B	E11	RHR (Cont.)	All pressure-retaining components and piping		C-H	External surfaces (Note 5)	VT-2
B	E22	HPCF	Pump injection lines from injection valves F003B & C up to and including HPCF pumps B & C	Figure 6.3-7 sh. 1, 2 Figure 5.4-8 sh. 1			
			250A-HPCF-007 piping		C-F-1	Welds (Note 1)	UT-PT
			Integral attachments		C-C	Welds (Note 3)	PT
			Pressure-retaining components and piping		C-H	External surfaces (Note 5)	VT-2
			Piping and component supports		F-A	Supports (Note 6)	VT-3
			Pump test return lines from the injection line connection including valves F008B & C and F009B & C , reducer "80A X 200A" and piping up to the RHR test return line taps.	Figure 6.3-7 sh. 2			
			200A-HPCF-012 piping		C-F-1	Welds (Note 1)	UT, PT
			Integral attachments		C-C	Welds (Notes 3)	PT

Table 6.6-1 Examination Categories and Methods (Continued)

Quality Group	System Number	System Title	System Description	P&ID Diagram	Sec. XI Exam Cat.	Items Examined	Exam Method
B	E22	HPCF (Cont.)	All pressure-retaining components and piping		C-H	External surfaces (Note 5)	VT-2
			Piping and component supports		F-A	Supports (Note 6)	VT-3
			S/P suction lines from suction strainers up to and including isolation valves F006B & C	Figure 5.3-7 sh. 2			
			400A-HPCF-009 Piping 200A-HPCF-011 Piping		C-F-1	Welds (Note 1)	UT, PT
			Integral attachments		C-C	Welds (Note 3)	PT
			All pressure-retaining components and piping		C-H	External surfaces (Note 5)	VT-2
			Component supports		F-A	Supports (Note 6)	VT-3

Table 6.6-1 Examination Categories and Methods (Continued)

Quality Group	System Number	System Title	System Description	P&ID Diagram	Sec. XI Exam Cat.	Items Examined	Exam Method
B	E22	HPCF (Cont.)	Piping and equipment subject to pressure and temperature less than 275 psi and 200°F - condensate storage pool - suction lines from condensate storage tank to RCIC, SPCU and HPCF-B, -C - HPCF pumps B and C suction lines from S/P valves F006B & C and from Condensate Storage Pool up to pump inlet	Figure 6.3-7 sh. 2 Figure 5.4-8 sh. 1 Figure 9.5-1	Exempted per IWC-1222 (c)		
			All pressure retaining components and piping		C-H	External surfaces (Note 5)	VT-2
			All Class B piping 20A, 25A, 50A and 80A in diameter, i.e.: - test connections - vent lines - instrument lines - minimum flow bypass lines - makeup lines for water leg seal - SRV discharge lines - drain lines - and etc.	Figure 6.3-7 sh. 1, 2	Exempted per IWC-1221 (a),(c)		
			All pressure retaining components and piping		C-H	External surfaces (Note 5)	VT-2

Table 6.6-1 Examination Categories and Methods (Continued)

Quality Group	System Number	System Title	System Description	P&ID Diagram	Sec. XI Exam Cat.	Items Examined	Exam Method
B	E51	RCIC	Steam supply line from outermost isolation valve F036 (includes drain pot) up to and including “100A X 150A” reducer	Figure 5.4-8 sh. 2			
			150A-RCIC-034 Piping 150A-RCIC-035 Piping 150A-RCIC-036 Piping		C-F-2	Welds (Note 1)	UT, MT
			Drain pot connections to: 150A-RCIC-34 150A-RCIC-35		C-F-2	Welds (Note 1)	UT, MT
			Integral attachments		C-C	Welds (Note 3)	MT
			All pressure-retaining components and piping		C-H	External surfaces (Note 5)	VT-2
			Piping and component supports		F-A	Supports (Note 6)	VT-3
			Turbine exhaust line from the turbine up to and including exhaust sparger in the suppression pool	Figure 5.4-8 sh. 1, 3			

Table 6.6-1 Examination Categories and Methods (Continued)

Quality Group	System Number	System Title	System Description	P&ID Diagram	Sec. XI Exam Cat.	Items Examined	Exam Method
B	E51	RCIC (Cont.)	250A-RCIC-037 Piping		C-F-2	Welds (Note 1)	UT, MT
			350A-RCIC-038 Piping				
			350A-RCIC-039 Piping				
			Integral attachments		C-C	Welds (Note 3)	MT
			All pressure-retaining components and piping		C-H	External Surfaces (Note 5)	VT-2
			Piping and component supports		F-A	Supports (Note 6)	VT-3
			Turbine exhaust vent line including rupture discs	Figure 5.4-8 sh. 3			
			250A-RCIC-504 piping		C-F-2	Welds (Note 1)	UT, MT
			Integral attachments		C-C	Welds (Note 3)	MT
			All pressure-retaining components and piping		C-H	External surfaces (Note 5)	VT-2
			Piping and component supports		F-A	Supports (Note 6)	VT-3

Table 6.6-1 Examination Categories and Methods (Continued)

Quality Group	System Number	System Title	System Description	P&ID Diagram	Sec. XI Exam Cat.	Items Examined	Exam Method
B	E51	RCIC (Cont.)	Pump discharge line from feedwater line B thermal sleeve up to and including RCIC pump C001	Figure 5.4-8 sh. 1			
			150A-RCIC-003 piping		C-F-2	Welds (Note 1)	UT, MT
			Pump casing welds		C-G	Welds (Note 2)	MT
			Bolting		C-D	Bolts,Studs (Note 4)	UT
			Integral attachments		C-C	Welds (Note 3)	MT
			All pressure-retaining components and piping		C-H	External surfaces (Note 5)	VT-2
			Component supports		F-A	Supports (Note 6)	VT-3
			Suppression pool suction line from suction strainer up to and including isolation valve F006	Figure 5.4-8 sh. 1			
			200A-RCIC-004 piping		C-F-2	Welds (Note 1)	UT, MT
			Integral attachments		C-C	Welds (Note 3)	MT

Table 6.6-1 Examination Categories and Methods (Continued)

Quality Group	System Number	System Title	System Description	P&ID Diagram	Sec. XI Exam Cat.	Items Examined	Exam Method
B	E51	RCIC (Cont.)	All pressure retaining piping and components		C-H	External surfaces (Note 5)	VT-2
			Piping and component supports		F-A	Supports (Note 6)	VT-3
			All Class B piping 15A, 20A, 25A, 50A and 100A in diameter, i.e.: - cooling water line - minimum flow bypass - test return line - leakoff lines - vacuum pump discharge line - condensate pump discharge line - test connections - makeup line for water leg seal - SRV discharge line - vacuum breaker line - and etc.	Figure 5.4-8 sh. 1–3	Exempted per IWC-1221 (a),(c)		
			All pressure retaining components and piping		C-H	External surfaces (Note 5)	VT-2
			Piping and equipment subject to pressure and temperature less than 1.89 MPa and 93.3°C, i.e,: - RCIC pump suction lines from S/P valve F006 and from CSP up to pump inlet.	Figure 5.4-8 sh. 1	Exempted per IWC-1222 (c)		
			All pressure-retaining components and piping		C-H	External surfaces (Note 5)	VT-2

Table 6.6-1 Examination Categories and Methods (Continued)

Quality Group	System Number	System Title	System Description	P&ID Diagram	Sec. XI Exam Cat.	Items Examined	Exam Method
B	G31	CUW	Return line to RPV from Feedwater line B thermal sleeve up to and including valve F015	Figure 5.4-12 sh. 1 Figure 5.1-3 sh. 4			
			50A-NB-021 Piping 200A-NB-014 Piping 200A-NB-015 Piping		C-F-2	Welds (Note 1)	UT, MT
			Integral attachment		C-C	Welds (Note 3)	MT
			All pressure-retaining components and piping		C-H	External surfaces (Note 5)	VT-2
			Component supports		F-A	Supports (Note 6)	VT-3
			50A equipment drain sump line from RPV head	Figure 5.4-12 sh. 1	Exempted per IWC-1222 (a),(b)		
			All pressure-retaining components and piping		C-H	External surfaces (Note 5)	VT-2

Table 6.6-1 Examination Categories and Methods (Continued)

Quality Group	System Number	System Title	System Description	P&ID Diagram	Sec. XI Exam Cat.	Items Examined	Exam Method
B	P11	Purified Makeup Water	50A piping penetrating primary containment from outermost valve F141 up to and including inboard check valve F142.	Figure 5.2-5 sh. 2	Exempted per IWC-1222 (a) , (b)		
			All pressure-retaining components and piping		C-H	External Surfaces (Note 5)	VT-2
B	P21	Reactor Building Cooling Water	Piping penetrating primary containment from valves F075A & B up to and including valves F076A & B; and from valves F080A & B up to and including valves F081A & B	Figure 9.2-1 sh. 3, 6			
			All pressure-retaining components and piping		C-H	External surfaces (Note 5)	VT-2
			Piping		C-F-2	Welds (Note 1)	UT, MT
			Integral attachments		C-C	Welds (Note 3)	MT
			Piping and component supports		F-A	Supports (Note 6)	VT-3
			20A drain lines from valves F075A & B and valves F081A & B taps up to and including normally closed valves F251A & B and F252A & B	Figure 9.2-1 sh. 1, 6	Exempted per IWC-1222 (a), (b)		

Table 6.6-1 Examination Categories and Methods (Continued)

Quality Group	System Number	System Title	System Description	P&ID Diagram	Sec. XI Exam Cat.	Items Examined	Exam Method
B	P21	Reactor Building Cooling Water (Cont.)	All pressure-retaining components and piping		C-H	External surfaces (Note 5)	VT-2
B	P24	HVAC Normal Cooling Water	Piping penetrating primary containment from valve F142 up to and including valve F141; and from valve F053 up to and including valve F054	Figure 9.2-2	Exempted per IWC-1222 (a), (b)		
			All pressure-retaining components and piping		C-H	External surfaces (Note 5)	VT-2
B	T31	Atmos-pheric Control	Drywell/ wetwell purge exhaust lines from primary containment penetrations through valves F004 and F006 up to and including valves F008 and F009	Figure 6.2-39 sh. 1			
			Piping		C-F-2	Welds (Note 1)	UT, MT
			Integral attachments		C-C	Welds (Note 3)	MT
			All pressure-retaining components and surfaces		C-H	External Surfaces (Note 5)	VT-2
			Piping and component supports		F-A	Supports (Note 6)	VT-3

Table 6.6-1 Examination Categories and Methods (Continued)

Quality Group	System Number	System Title	System Description	P&ID Diagram	Sec. XI Exam Cat.	Items Examined	Exam Method
B	T31	Atmos-pheric Control (Cont.)	All Class B piping 20A, 50A in diameter, i.e.: - test connections - equalizing lines - small process lines - air lines - instrument lines - and etc.	Figure 6.2-39 sh. 1, 2	Exempted per IWC-1222 (a), (b)		
			All pressure-retaining components and piping		C-H	External surfaces (Note 5)	VT-2
			Drywell / wetwell purge supply lines from primary containment penetrations through valves F002 and F003, through Flow Elements FE001 and FE003	Figure 6.2-39 sh. 1			
			Piping		C-F-2	Welds (Note 1)	UT, MT
			Integral attachments		C-C	Welds (Note 3)	MT
			All pressure-retaining components		C-H	External surfaces (Note 5)	VT-2
			Piping and component supports		F-A	Supports (Note 6)	VT-3

Table 6.6-1 Examination Categories and Methods (Continued)

Quality Group	System Number	System Title	System Description	P&ID Diagram	Sec. XI Exam Cat.	Items Examined	Exam Method
Quality Group	**System Number**	**System Title**	**System Description**	**P&ID Diagram**	**Sec. XI Exam Cat.**	**Items Examined**	**Exam Method**
B	E22	HPCF (Cont.)	Piping and equipment subject to pressure and temperature less than 275 psi and 200°F - condensate storage pool - suction lines from condensate storage tank to RCIC, SPCU and HPCF-B, -C - HPCF pumps B and C suction lines from S/P valves F006B & C and from Condensate Storage Pool up to pump inlet	Figure 6.3-7 sh. 2 Figure 5.4-8 sh. 1 Figure 9.5-1	Exempted per IWC-1222 (c)		
			All pressure retaining components and piping		C-H	External surfaces (Note 5)	VT-2
			All Class B piping 20A, 25A, 50A and 80A in diameter, i.e.: - test connections - vent lines - instrument lines - minimum flow bypass lines - makeup lines for water leg seal - SRV discharge lines - drain lines - and etc.	Figure 6.3-7 sh. 1, 2	Exempted per IWC-1221 (a),(c)		

Table 6.6-1 Examination Categories and Methods (Continued)

Quality Group	System Number	System Title	System Description	P&ID Diagram	Sec. XI Exam Cat.	Items Examined	Exam Method
			All pressure retaining components and piping		C-H	External surfaces (Note 5)	VT-2
B	E51	RCIC	Steam supply line from outermost isolation valve F036 (includes drain pot) up to and including “100A X 150A” reducer	Figure 5.4-8 sh. 2			
			150A-RCIC-034 Piping 150A-RCIC-035 Piping 150A-RCIC-036 Piping		C-F-2	Welds (Note 1)	UT, MT
			Drain pot connections to: 150A-RCIC-34 150A-RCIC-35		C-F-2	Welds (Note 1)	UT, MT
			Integral attachments		C-C	Welds (Note 3)	MT
			All pressure-retaining components and piping		C-H	External surfaces (Note 5)	VT-2
			Piping and component supports		F-A	Supports (Note 6)	VT-3
			Turbine exhaust line from the turbine up to and including exhaust sparger in the suppression pool	Figure 5.4-8 sh. 1, 3			

Table 6.6-1 Examination Categories and Methods (Continued)

Quality Group	System Number	System Title	System Description	P&ID Diagram	Sec. XI Exam Cat.	Items Examined	Exam Method
B	E51	RCIC (Cont.)	250A-RCIC-037 Piping		C-F-2	Welds (Note 1)	UT, MT
			350A-RCIC-038 Piping				
			350A-RCIC-039 Piping				
			Integral attachments		C-C	Welds (Note 3)	MT
			All pressure-retaining components and piping		C-H	External Surfaces (Note 5)	VT-2
			Piping and component supports		F-A	Supports (Note 6)	VT-3
			Turbine exhaust vent line including rupture discs	Figure 5.4-8 sh. 3			
			250A-RCIC-504 piping		C-F-2	Welds (Note 1)	UT, MT
			Integral attachments		C-C	Welds (Note 3)	MT
			All pressure-retaining components and piping		C-H	External surfaces (Note 5)	VT-2
			Piping and component supports		F-A	Supports (Note 6)	VT-3

Table 6.6-1 Examination Categories and Methods (Continued)

Quality Group	System Number	System Title	System Description	P&ID Diagram	Sec. XI Exam Cat.	Items Examined	Exam Method
B	E51	RCIC (Cont.)	Pump discharge line from feedwater line B thermal sleeve up to and including RCIC pump C001	Figure 5.4-8 sh. 1			
			150A-RCIC-003 piping		C-F-2	Welds (Note 1)	UT, MT
			Pump casing welds		C-G	Welds (Note 2)	MT
			Bolting		C-D	Bolts,Studs (Note 4)	UT
			Integral attachments		C-C	Welds (Note 3)	MT
			All pressure-retaining components and piping		C-H	External surfaces (Note 5)	VT-2
			Component supports		F-A	Supports (Note 6)	VT-3
			Suppression pool suction line from suction strainer up to and including isolation valve F006	Figure 5.4-8 sh. 1			
			200A-RCIC-004 piping		C-F-2	Welds (Note 1)	UT, MT
			Integral attachments		C-C	Welds (Note 3)	MT

Table 6.6-1 Examination Categories and Methods (Continued)

Quality Group	System Number	System Title	System Description	P&ID Diagram	Sec. XI Exam Cat.	Items Examined	Exam Method
B	E51	RCIC (Cont.)	All pressure retaining piping and components		C-H	External surfaces (Note 5)	VT-2
			Piping and component supports		F-A	Supports (Note 6)	VT-3
			All Class B piping 15A, 20A, 25A, 50A and 100A in diameter, i.e.: - cooling water line - minimum flow bypass - test return line - leakoff lines - vacuum pump discharge line - condensate pump discharge line - test connections - makeup line for water leg seal - SRV discharge line - vacuum breaker line - and etc.	Figure 5.4-8 sh. 1–3	Exempted per IWC-1221 (a),(c)		
			All pressure retaining components and piping		C-H	External surfaces (Note 5)	VT-2
			Piping and equipment subject to pressure and temperature less than 1.89 MPa and 93.3°C, i.e,: - RCIC pump suction lines from S/P valve F006 and from CSP up to pump inlet.	Figure 5.4-8 sh. 1	Exempted per IWC-1222 (c)		
			All pressure-retaining components and piping		C-H	External surfaces (Note 5)	VT-2

Table 6.6-1 Examination Categories and Methods (Continued)

Quality Group	System Number	System Title	System Description	P&ID Diagram	Sec. XI Exam Cat.	Items Examined	Exam Method
B	G31	CUW	Return line to RPV from Feedwater line B thermal sleeve up to and including valve F015	Figure 5.4-12 sh. 1 Figure 5.1-3 sh. 4			
			50A-NB-021 Piping 200A-NB-014 Piping 200A-NB-015 Piping		C-F-2	Welds (Note 1)	UT, MT
			Integral attachment		C-C	Welds (Note 3)	MT
			All pressure-retaining components and piping		C-H	External surfaces (Note 5)	VT-2
			Component supports		F-A	Supports (Note 6)	VT-3
			50A equipment drain sump line from RPV head	Figure 5.4-12 sh. 1	Exempted per IWC-1222 (a),(b)		
			All pressure-retaining components and piping		C-H	External surfaces (Note 5)	VT-2
C	B21	Nuclear Boiler	Main Steam SRV discharge lines	Figure 5.1-3 sh. 2			

Table 6.6-1 Examination Categories and Methods (Continued)

Quality Group	System Number	System Title	System Description	P&ID Diagram	Sec. XI Exam Cat.	Items Examined	Exam Method
			All pressure-retaining components and piping		D-A	External Surfaces (Note 7)	VT-2
			Integral Attachments		D-A	Welds (Note 8)	VT-3
			Piping and component supports		F-A	Supports (Note 6)	VT-3
C	G31	CUW	From outermost isolation valve F003 and through the following: - 1 Regenerative HX (3 shells per unit) - 2 Non-regenerative HX's (2 shells per unit) - Filter Demineralizer subsystem - return line to the RPV through regenerative HX and bypass line up to and including valves F015 and F016 - blowdown line to the S/P and radwaste up to and including valves F023 and F025 - and all other branch lines > 100A	Figure 5.4-12 sh. 1, 2			
			All pressure-retaining components and piping		D-B	External Surfaces (Note 7)	
C	G31	CUW (Cont.)	Integral attachments		D-B	Welds (Note 8)	
			Piping and Component Supports		F-A	Supports (Note 6)	

Table 6.6-1 Examination Categories and Methods (Continued)

Quality Group	System Number	System Title	System Description	P&ID Diagram	Sec. XI Exam Cat.	Items Examined	Exam Method
			All Class C piping 100A and smaller, i.e.: - drain lines - test connections - instrument lines - vent lines - CUW pump seal purge lines - sampling lines - small process lines - and etc.	Figure 5.4-12 sh. 1, 2	Exempted per IWD-1220		
			All pressure-retaining components and piping		D-B	External Surfaces (Note 7)	VT-2
C	G41	Fuel Pool Cooling and Clean-up	From skimmer surge tanks; Dryer-separator, and reactor well drains through FPC pumps, filter/demineralizer subsystem, FPC HXs and into the reactor well and fuel storage	Figure 9.1-1 sh. 1–3			
			All pressure-retaining components and piping		D-C	External Surfaces (Note 7)	VT-2
			Integral attachments		D-C	Welds (Note 8)	VT-3

Table 6.6-1 Examination Categories and Methods (Continued)

Quality Group	System Number	System Title	System Description	P&ID Diagram	Sec. XI Exam Cat.	Items Examined	Exam Method
C	G41	Fuel Pool Cooling and Clean-up (Cont.)	Piping and Component Supports		F-A	Supports (Note 6)	VT-3
			From skimmer surge tank through Fuel Pool Cooling pumps C001A & B up to and including valve F005B (exclude Filter Demineralizer subsystem).	Figure 9.1-1 sh. 1–3			
			All pressure-retaining components		D-C	External Surfaces (Note 7)	VT-2
			Integral attachments		D-C	Welds (Note 8)	VT-3
			Piping and component supports		F-A	Supports (Note 6)	VT-3
			250A Filter/Demineralizer Bypass Line	Figure 9.1-1 sh. 2			
			All pressure-retaining components		D-C	External Surfaces (Note 7)	VT-2
			Integral Attachments		D-C	Welds (Note 8)	VT-3
			Piping and Component Supports		F-A	Supports (Note 6)	VT-3

Table 6.6-1 Examination Categories and Methods (Continued)

Quality Group	System Number	System Title	System Description	P&ID Diagram	Sec. XI Exam Cat.	Items Examined	Exam Method
C	G41	Fuel Pool Cooling and Clean-up (Cont.)	Piping from valve F012 through HXs B001A & B and into the reactor well and spent fuel storage	Figure 9.1-1 sh. 2			
			All pressure-retaining components and piping		D-C	External Surfaces (Note 7)	
			Integral Attachments		D-C	Welds (Note 8)	
			Piping and Component Supports		F-A	Supports (Note 6)	VT-3
			All Class C piping 100A and smaller, i.e.: - drain lines - test connections - vent lines - instrument lines - sample lines - and etc.	Figure 9.1-1 sh. 2	Exempted per IWD-1220		
			All pressure-retaining components and piping		D-C	External Surfaces (Note 7)	
C	G51	SPCU	Suction lines from valves F002 and F009 through SPCU pump C001 up to and including valves F004, F005, G41-F041, and into the S/P return line up to valve F006 inlet	Figure 9.5-1			

Table 6.6-1 Examination Categories and Methods (Continued)

Quality Group	System Number	System Title	System Description	P&ID Diagram	Sec. XI Exam Cat.	Items Examined	Exam Method
C	G51	SPCU (Cont.)	All pressure-retaining components and piping		D-B	External Surfaces (Note 7)	VT-2
			Integral attachments		D-B	Welds (Note 8)	VT-3
			Piping and Component Supports		F-A	Supports (Note 6)	VT-3
			All Class C piping 20A, 25A, 50A, and 80A in diameter, i.e.: - drain lines - test connections - instrument lines - overpressure relief line including SRV - equalizer lines - vent lines - branch lines to RCW, FPC - makeup water line up to valve F015 - and etc.	Figure 9.5-1	Exempted per IWD-1220		
			All pressure-retaining components and piping		D-B	External Surfaces (Note 7)	VT-2

Table 6.6-1 Examination Categories and Methods (Continued)

Quality Group	System Number	System Title	System Description	P&ID Diagram	Sec. XI Exam Cat.	Items Examined	Exam Method
C	P21	Reactor Building Cooling Water	From and including valves F074A,B & C and F082A,B & C through RCW pumps C001A D,B,E,C & F and through the following: - RCW HXs A,D,B,E,C,F - Emergency Diesel generator cooling equipment A, B, C - RHR HXs A,B,C - HECW Refrigerators A, B,C,D - FPC HXs A,B - RCW surge tanks A,B - and all Class C branch lines > 100A	Figure 9.2-1 sh. 1, 2, 4, 5, 7, 8			
			All pressure-retaining components and piping		D-B	External Surfaces (Note 7)	VT-2
			Integral attachments		D-B	Welds (Note 8)	VT-3
			Piping and Component Supports		F-A	Supports (Note 6)	VT-3

Table 6.6-1 Examination Categories and Methods (Continued)

Quality Group	System Number	System Title	System Description	P&ID Diagram	Sec. XI Exam Cat.	Items Examined	Exam Method
C	P21	Reactor Building Cooling Water (Cont.)	All Class C branch lines 100A and smaller, i.e.: - lines to and from RHR/HPCF pumps seals, motor bearing coolers - lines to and from RCIC pump room coolers - instrument lines - lines to and from FPC, SGTS, FCS room coolers - lines to and from CAM System coolers and air conditioning unit - drain lines - test connections - and etc.	Figure 9.2-1 sh. 1, 2, 4, 5, 7, 8	Exempted per IWD-1220		
			All pressure-retaining components and piping		D-B	External Surfaces (Note 7)	VT-2
C	P41	Reactor Service Water	From suction strainers through RSW pumps C001A, D, B, E, C, F, and through RCW HXs and into but not including the discharge canal to the ultimate heat sink.	Figure 9.2-7			
			All pressure-retaining components and piping		D-B	External Surfaces (Note 7)	VT-2
			Integral attachments		D-B	Welds (Note 8)	VT-3
			Piping and Component Supports		F-A	Supports (Note 6)	VT-3

Table 6.6-1 Examination Categories and Methods (Continued)

Quality Group	System Number	System Title	System Description	P&ID Diagram	Sec. XI Exam Cat.	Items Examined	Exam Method
C	P41	Reactor Service Water (Cont.)	All Class C piping 100A and smaller, i.e.: - test connections - bypass lines - instrument lines - ferrous ion injection lines - drainlines - and etc.,	Figure 9.2-7	Exempted per IWD-1220		
			All pressure-retaining components and piping		D-B	External Surfaces	VT-2
C	P54	HPIN	From nitrogen bottles up to and including valve F012A & B and valves F007A & B inlets (includes all Class C branch lines)	Figure 6.7-1	Exempted per IWD-1220		
			All pressure-retaining components and piping		D-B	External Surfaces (Note 7)	VT-2
			From valves F008A & B through the ADS valves accumulators and into the ADS SRVs		Exempted per IWD-1220		
			All pressure-retaining components and piping		D-B	External Surfaces (Note 7)	

Table 6.6-1 Examination Categories and Methods (Continued)

Quality Group	System Number	System Title	System Description	P&ID Diagram	Sec. XI Exam Cat.	Items Examined	Exam Method
C	T49	Flamma-bility Control	Piping from valves F006A & B up to and including the recombiner skids A & B	Figure 6.2-40			
			All pressure-retaining components and piping		D-B	External Surfaces (Note 7)	VT-2
			Integral attachments		D-B	Welds (Note 8)	VT-3
			Piping and Component Supports		F-A	Supports (Note 6)	VT-3
			All Class C piping 20A, 25A, 50A, 80A and 100A in diameter, i.e.: - drain lines - test connections - SRV discharge line - instrument lines - small process lines - and etc.	Figure 6.2-40	Exempted per IWD-1220		
			All pressure-retaining components and piping		D-B	External Surfaces (Note 7)	VT-2
			Integral attachments		D-B	Welds (Note 15)	VT-3
			Piping and Component Supports		F-A	Supports (Note 6)	VT-3

Table 6.6-1
Examination Categories and Methods (Continued)

Notes:

(1) **Category C-F-2:** At least 7.5% of the circumferential Carbon steel and low alloy steel piping welds (including branch connection welds) shall be selected for inservice inspection in accordance with the rules of Table IWC-2500-1 for examination category C-F-2. Welds NPS 4 and larger, with nominal wall thickness 9.5 mm and greater, are examined by both ultrasonic (UT) and either magnetic particle (MT) or liquid penetrant (PT) examination methods. Welds in piping NPS 2 and greater but less than NPS 4, and which have nominal wall thicknesses greater than 5.1 mm, are examined by the UT and either MT or PT methods. Branch connection welds of branch piping NPS 2 and greater require MT or PT examination only. The examinations include a length of the longitudinal weld intersecting the circumferential weld of at least 2.5t, where t = the nominal pipe wall thickness.

(2) **Category C-G**: Pump and valve body welds selected for inservice inspection are limited to at least one valve within each group of valves of the same size and type and performing a similar function in accordance with the rules of Table IWC-2500-1 for examination Category C-G.

(3) **Category CC**: Examination of integral attachments for inservice inspection is limited to those attachments which are external, associated with an NF type component support and which have a base material thickness greater than 19.1 mm, as specified by Table IWB-2500-1 for examination Category C-C. For attachments to pumps and valves, only those associated with pumps and valves selected for inservice inspection require inservice examination.

(4) **Category C-D**: Bolting, greater than 50.8 mm in diameter, on pumps and valves selected for inservice inspection may be limited to at least one pump and valves within each group of pumps or valves of the same size and type and performing a similar function in accordance with the rules of Table IWC-2500-1 for examination Category C-G. Flange bolting in piping systems selected for inservice inspection may be limited to the flange connections in piping runs selected for examinations under Category C-F.

(5) **Category C-H**: Visual examination of the external surfaces of pressure retaining components and piping for inservice inspection is performed in conjunction with the system inservice, system functional and system hydrostatic tests in accordance with the rules of Table IWC-2500-1 for examination Category C-H.

Table 6.6-1
Examination Categories and Methods (Continued)

(6) **Category F-A**: Supports selected for inservice examination, as described in IWF-2510, shall include 15% of Class 2 piping supports and 10% of Class 3 piping supports. The total percentage sample shall be comprised of supports from each system where the individual sample sizes are proportional to the total number of non-exempt supports of each type and function within the system. All supports of non-exempt components (i.e., vessels, pumps and valves, shall be subject to inservice examination).

(7) **Category D-A, D-B and D-C**: Visual examination of the external surfaces of pressure-retaining components and piping for inservice inspection is performed in conjunction with the system inservice, system functional and system hydrostatic tests in accordance with the rules of Table IWD-2500-1 for examination Categories D-A, D-B and D-C.

(8) In the case of multiple components within a system of similar design, function and service, the integral attachment of only one of those components shall be selected for inservice examination.

General: The preservice examination includes all of the items selected for inservice examination in all examination categories with the exception of Category C-H, in accordance with IWC-2200, and the VT-2 examination of pressure retaining surfaces in Categories D-A, D-B and D-C, in accordance with IWD-2200. Preservice examination of supports shall be performed following the initiation of hot functional or power ascension tests.

6.7 High Pressure Nitrogen Gas Supply System

6.7.1 Functions

The High Pressure Nitrogen Gas Supply (HPIN) System is divided into two independent divisions, with each division containing a safety-related emergency stored nitrogen supply. The safety-related stored nitrogen supply is Safety Class 3, Seismic Category I, designed for operation of the main steam SRV ADS function accumulators.

The functions of the non-safety-related, makeup nitrogen gas supply system include providing nitrogen for:

(1) Relief function accumulators of main steam SRVs

(2) Pneumatically-operated valves and instruments inside the PCV

(3) Leak detection system radiation monitor calibration

(4) ADS function accumulators to compensate for the leakage from main steam SRV solenoid valves during normal operation

6.7.2 System Description

Normally, nitrogen gas for both safety-related and non-safety-related makeup systems is supplied from the nitrogen gas evaporator via the makeup line to the Atmospheric Control System (ACS). The nitrogen supply system shall supply nitrogen which is oil-free with a moisture content of less than 2.5 ppm. This nitrogen is filtered in the HPIN System to remove particles larger than 5 µm. All equipment using this nitrogen shall be capable of operating with nitrogen of the quality listed above. If nitrogen is not available from the ACS, nitrogen is supplied from high pressure nitrogen gas storage bottles. The safety-related system is separated into two divisions. There are tielines between the non-safety-related and each division of the safety-related system. Each tieline has a motor-operated shutoff valve (See Figure 6.7-1 and Table 6.7-1 for details).

During operation, all SRV accumulators are supplied from the non-divisional system. If the pressure sensor in either of the safety-related systems indicates low pressure, the valve between that system and the non-divisional system closes and the supply valve to the bottled nitrogen supply in that division opens. If the pressure sensor in the non-divisional system indicates a low pressure, the valves between the non-divisional and the divisional systems close. (See Figure 7.3-10)

Each division of the safety-related system has ten bottles. Normally, outlet valves from five of the ten bottles are kept open. Each division has a pressure control valve to depressurize the nitrogen gas from the bottles.The bottle racks are located in different rooms, see Figure 1.2-10. The nitrogen gas supply pressure shall be sufficient to fully open the SRVs at the maximum drywell backpressure specified in section 19.E.2.1.2.2.2(b).

The bottles are mechanically restrained to preclude generation of high-pressure missiles during an SSE. The bottles are also covered by a heavy steel plate, which serves as a barrier to potential missiles.

Flow rate and capacity requirements are divided into an initial requirement and a continuous supply. An initial requirement for each ADS SRV provides for actuations of the valve against drywell pressure. Two hundred liter accumulators are supplied for each main steam ADS SRV actuator. The continuous supply is divided into safety and nonsafety portions. Calculations shall be performed to confirm that an accumulator capacity of 200 liters, with the minimum required pneumatic supply pressure is sufficient for one actuation at drywell design pressure, or five actuations at normal drywell pressure with nominal pneumatic supply pressure. The analysis methods used to confirm that the accumulator capacity is sufficient are provided in Subsection 6.7.6.

Compressed nitrogen at a rate adequate to make up the nitrogen leakage of each serviced valve is provided by the safety-related portion. This assumes a leakage rate for each valve of 28.3 L/h for a period of at least seven days. The safety-related system with associated lines, valves and fittings are classified as Safety Class 3, Seismic Category I.

The non-safety-related portion provides compressed nitrogen at a rate adequate to recharge the ADS SRV accumulators. The non-safety-related system has two pressure control valves to depressurize the nitrogen gas from the AC system. One is to depressurize to a level for the SRV accumulators and the other is to depressurize to a lower level for other pneumatic uses per Figure 6.7-1.

The continuous supply portion of the pneumatic system, upstream of the non-safety-related HPIN System isolation valve, is not safety-related.

Non-safety-related piping and valves of the system are designed to ASME Code Section III, Class 3, Quality Group C, non-seismic Category I.

System design pressure and temperature are shown in Figure 6.7-1.

6.7.3 System Evaluation

Gas bottles, piping and valves of the safety-related portion of the system are designed to Seismic Category I, ASME Code III, Class 3, Quality Group C and Quality Assurance B requirements, except for the piping and valves for the containment penetrations which are designed to Seismic Category I, ASME Code III, Class 2, Quality Group B and Quality Assurance B requirements.

The safety-related high pressure nitrogen gas supply is separated into two independent divisions, with each division capable of supplying 100% of the requirements of the division being serviced. Each division is mechanically and electrically separated from the other. HPIN System, Division A, is powered from Class 1E Division I and HPIN System, Division B, is

powered from Class 1E Division II. The system satisfies the components' nitrogen demands during all plant operation conditions (normal through faulted).

The safety-related portions of the HPIN System are capable of being isolated from the nonsafety-related parts and retaining their function during LOCA-related and/or seismic events.

Pipe routing of Division A and Division B of the HPIN System is kept separated by enough space so that a single fire, equipment dropping accident, strike from a single high energy whipping pipe, jet force from a single broken pipe, internally generated missile or wetting equipment with spraying water cannot prevent the other division from accomplishing its safety function. Separation is accomplished by spatial separation or by a reinforced concrete barrier, to ensure separation of each pneumatic division from any systems and components which belong to the other pneumatic division.

6.7.4 Inspection and Testing Requirements

Mandatory periodic inservice inspection of components, in accordance with ASME Section XI, will be conducted to ensure the capability and integrity of the system. Nitrogen quality shall be tested periodically to assure compliance with ANSI MC11.1.

The HPIN containment isolation valves are capable of being tested to assure their operational integrity by manual actuation of a switch located in the control room and by observation of associated position indication lights. Test and vent connections are provided at the containment isolation valves in order to verify their leaktightness. Operation of valves and associated equipment used to switch from the non-safety-related to the safety-related nitrogen supply can be tested to assure operational integrity by manual actuation of a switch located in the control room and by observation of associated position indication lights. Periodic tests of the check valves and accumulators shall be conducted to assure valve operability. Periodic testing of the safety relief valves, the accumulator check valve, and the relief valve if present, shall be conducted to confirm that the nitrogen leakage is within the assumed value of 28 liters per hour for each safety relief valve.

6.7.5 Instrumentation Requirements

A pressure sensor is provided for the safety-related nitrogen supply, and an alarm signals low nitrogen pressure.

A remote manual switch and open/closed position lights are provided in the control room for valve operation and position indication.

6.7.6 Analysis and Testing of ADS Accumulator Capacity

Several methods can be used to confirm that the accumulator capacity meets the design requirements specified in Section 6.7.2. The simplest method, models the ADS actuation process as an adiabatic isentropic expansion. For a given accumulator capacity the number of

actuations is determined using the ideal gas law and adiabatic/isentropic relationships. For conservatism, the system can be assumed not to return to ambient temperature after each actuation.

The volume of the individual ADS accumulators shall be confirmed by measurement or test. This test may occur during production testing.

Table 6.7-1 Nitrogen Gas Demand

Use	Intermittent Demand (Normal Liters/Minute)	Continuous Demand (Normal Liters/Minute)
MS SRV Leakage	—	6
MS SRV Accumulator Recharging	400	—
Instrument Air Supply System	300	100

The following figure is located in Chapter 21:

Figure 6.7-1 High Pressure Nitrogen Gas Supply System P&ID

6A Regulatory Guide 1.52, Section C, Compliance Assessment

This Appendix provides the compliance status of the ABWR SGTS design with each of the regulatory positions specified under Section C of Regulatory Guide 1.52, and the revision cited in Table 1.8-20. Following each provision of Regulatory Guide 1.52 is an evaluation of the ABWR compliance with that position. If the ABWR deviates from the Regulatory Guide 1.52 position, justification is provided. Note that the similarly numbered sections from the revisions cited in Table 1.8-21 for ANSI N509 and N510 are used for ABWR SGTS design except as otherwise noted; Regulatory Guide 1.52 references older revisions (1976) of these standards. Compliance as described in the remainder of this response is measured against the applicable section of the standards referenced in Table 1.8-21.

In addition, the term "demister," used in Regulatory Guide 1.52, is a trademark of Otto H. York Co., Inc. of Parsippany, New Jersey. The ABWR SGTS design includes provision for the use of moisture separators.

ABWR Compliance with Regulatory Guide 1.52, Revision 2, Section C

(1) Environmental Design Criteria

(a) "The design of an engineered safety feature atmosphere cleanup system should be based on the maximum pressure differential, radiation dose rate, relative humidity, maximum and minimum temperature, and other conditions resulting from the postulated DBA and on the duration of such conditions."

The design is in compliance with this position.

(b) "The design of each ESF system should be based on the radiation dose to essential services in the vicinity of the adsorber section, integrated over the 30-day period following the postulated DBA. The radiation source term should be consistent with the assumptions found in Regulatory Guides 1.3, 1.4 and 1.25. Other engineered safety features, including pertinent components of essential services such as power, air, and control cables, should be adequately shielded from the ESF atmosphere cleanup systems."

The design is in compliance with this position. Table 3I.3-20 provides the radiation environmental conditions inside secondary containment for plant abnormal and accident conditions. Note that integrated doses for *six* months, not 30 days, are provided in Table 3I.3-20.

(c) "The design of each adsorber should be based on the concentration and relative abundance of the iodine species (elemental, particulate, and organic), which should be consistent with the assumptions found in Regulatory Guides 1.3, 1.4 and 1.25."

The design is in compliance with this position. A revised Table 6.5-2 is provided.

(d) "The operation of any ESF atmosphere cleanup system should not deleteriously affect the operation of other engineered safety features such as a containment spray system, nor should the operation of other engineered safety features such as a containment spray system deleteriously affect the operation of any ESF atmosphere cleanup system."

The design is in compliance with this position.

(e) "Components of systems connected to compartments that are unheated during a postulated accident should be designed for post-accident effects of both the lowest and highest predicted temperatures."

The design is in compliance with this position.

(2) System Design Criteria

(a) "ESF atmosphere cleanup systems designed and installed for the purpose of mitigating accident doses should be redundant. The systems should consist of the following sequential components: (1) demisters, (2) prefilters (demisters may serve this function), (3) HEPA filters before the adsorbers, (4) iodine adsorbers (impregnated activated carbon or equivalent adsorbent such as metal zeolites), (5) HEPA filters after the adsorbers, (6) ducts and valves, (7) fans, and (8) related instrumentation. Heaters or cooling coils used in conjunction with heaters should be used when the humidity is to be controlled before filtration."

The design is in compliance with this position.

(b) "The redundant ESF atmosphere cleanup systems should be physically separated so that damage to one system does not also cause damage to the second system. The generation of missiles from high-pressure equipment rupture, rotating machinery failure, or natural phenomena should be considered in the design for separation and protection."

The design is in compliance with this position.

(c) "All components of an engineered-safety-feature atmosphere cleanup system should be designated as Seismic Category I (see Regulatory Guide 1.29) if failure of a component would lead to the release of significant quantities of fission products to the working or outdoor environments."

The design is in compliance with this position.

(d) "If the ESF atmosphere cleanup system is subject to pressure surges resulting from the postulated accident, the system should be protected from such surges. Each component should be protected with such devices as pressure relief

valves so that the overall system will perform its intended function during and after the passage of the pressure surge."

The design is in compliance with this position. The ABWR SGTS is not subject to "pressure surges" from the postulated accident sufficient to cause damage to the filter train. Secondary containment pressure does increase slightly as part of the post-LOCA heatup process.

(e) "In the mechanical design of the ESF system, the high radiation levels that may be associated with buildup of radioactive materials on the ESF system components should be given particular consideration. ESF system construction materials should effectively perform their intended function under the postulated radiation levels. The effects of radiation should be considered not only for the demisters, heaters, HEPA filters, adsorbers, and fans, but also for any electrical insulation, controls, joining compounds, dampers, gaskets, and other organic-containing materials that are necessary for operating during a postulated DBA."

The design is in compliance with this position.

(f) "The volumetric air flow rate of a single cleanup train should be limited to approximately 30,000 ft^3/min. If a total system air flow in excess of this rate is required, multiple trains should be used. For ease of maintenance, a filter layout three HEPA filters high and ten wide is preferred."

The design is in compliance with this position.

(g) "The ESF atmosphere cleanup system should be instrumented to signal, alarm, and record pertinent pressure drops and flow rates at the control room."

The design is in compliance with this position. Filter train exhaust flow and reactor building differential pressure are indicated and appropriately annunciated in the main control room. Pertinent pressure drops across the individual components of the filter train are indicated at a local rack and main control room.

(h) "The power supply and electrical distribution system for the ESF atmosphere cleanup system described in Section C.2.a above [one that is used to mitigate accident doses] should be designed in accordance with Regulatory Guide 1.32. All instrumentation and equipment controls should be designed to IEEE-279. The ESF system should be qualified and tested under Regulatory Guide 1.89. To the extent applicable, Regulatory Guides 1.30, 1.100, and 1.118 and IEEE-334 should be considered in the design."

The design is in compliance with this position. Commitments for all except IEEE-334 are provided in Chapters 7, 8 and 17 and Sections 3.10 and 3.11. IEEE-334 is applied to the SGTS per this Regulatory Guide.

(i) "Unless the applicable engineered-safety-feature atmosphere cleanup system operates continuously during all times that a DBA can be postulated to occur, the system should be automatically activated upon the occurrence of a DBA by (1) a redundant engineered-safety-feature signal (i.e., temperature, pressure) or (2) a signal from redundant Seismic Category I radiation monitors."

The design is in compliance with this position.

(j) "To maintain radiation exposures to operating personnel as low as is reasonably achievable during plant maintenance, ESF atmosphere cleanup system should be designed to control leakage and facilitate maintenance in accordance with the guidelines of Regulatory Guide 8.8. The ESF atmosphere cleanup train should be totally enclosed. Each train should be designed and installed in a manner that permits replacement of the train as an intact unit or as a minimum number of segmented sections without removal of individual components."

The design is in compliance with this position.

(k) "Outdoor air intake openings should be equipped with louvers, grills, screens, or similar protective devices to minimize the effects of high winds, rain, snow, ice, trash, and other containments on the operation of the system. If the atmosphere surrounding the plant could contain significant environmental contaminants, such as dusts and residues from smoke cleanup systems from adjacent coal burning power plants or industry, the design of the system should consider these contaminants and prevent them from affecting the operation of any ESF atmosphere cleanup system."

The ABWR SGTS has no outdoor air intakes, taking suction only from within secondary containment. Secondary containment air is filtered by the HVAC system.

(l) "ESF atmosphere cleanup system housings and ductwork should be designed to exhibit on test a maximum total leakage rate as defined in Section 4.12 of ANSI N509-1976. Duct and housing leak tests should be performed in accordance with the provisions of Section 6 of ANSI N510-1975."

The design is in compliance with this position.

(3) Component Design Criteria and Qualification Testing

(a) "Demisters should be designed, constructed, and tested in accordance with the requirements of Section 5.4 of ANSI N509-1976. Demisters should meet Underwriters' Laboratories (UL) Class 1 requirements."

The design is in compliance with this position.

(b) "Air heaters should be designed, constructed, and tested in accordance with the requirements of Section 5.5 of ANSI N509-1976."

The design is in compliance with this position.

(c) "Materials used in the prefilters should withstand the radiation levels and environmental conditions prevalent during the postulated DBA. Prefilters should be designed, constructed, and tested in accordance with the provisions of Section 5.3 of ANSI N509-1976."

The design is in compliance with this position.

(d) "The HEPA filters should be designed, constructed, and tested in accordance with Section 5.1 of ANSI N509-1976. Each HEPA filter should be tested for penetration of dioctyl phthlate (DOP) in accordance with the provisions of MIL-F-51068 and MIL-STD-282."

The design is in compliance with this position. The applicable portion of MIL-F-51068 is Section 3.4.1. The applicable portions of MIL-STD-282 are Methods 102.1, 102.8 and 102.9.1.

(e) "Filter and adsorber mounting frames should be constructed and designed in accordance with the provisions of Section 5.6.3 of ANSI N509-1976."

The design is in compliance with this position.

(f) "Filter and adsorber banks should be arranged in accordance with the recommendations of Section 4.4 of ERDA 76-21."

The design is in compliance with this position.

(g) "System filter housings, including floors and doors, should be constructed and designed in accordance with the provisions of Section 5.6 of ANSI N509-1976."

The design is in compliance with this position.

(h) "Water drains should be designed in accordance with the recommendations of Section 4.5.8 of ERDA 76-21."

The design is in compliance with this position.

(i) "The adsorber section of the ESF atmosphere cleanup system may contain any adsorbent material demonstrated to remove gaseous iodine (elemental iodine and organic iodides) from air at the required efficiency. Since impregnated activated carbon is commonly used, only this adsorbent is discussed in this guide."

Impregnated activated carbon is used in the ABWR SGTS design.

> "Each original or replacement batch of impregnated activated carbon used in the adsorber section should meet the qualification and batch test results summarized in Table 5.1 of ANSI N509-1976. In this table, a 'qualification test' should be interpreted to mean a test that establishes the suitability of a product for a general application, normally a one-time test reflecting historical typical performance of material. In this table, a 'batch test' should be interpreted to mean a test made on a production batch of product to establish suitability for a specific application. A 'batch of activated carbon' should be interpreted to mean a quantity of material of the same grade, type, and series that has been homogenized to exhibit, within reasonable tolerance, the same performance and physical characteristics and for which the manufacturer can demonstrate by acceptable tests and quality control practices such uniformity."

The test requirements for the adsorber section will comply with this position.

> "All material in the same batch should be activated, impregnated, and otherwise treated under the same process conditions and procedures in the same process equipment and should be produced under the same manufacturing release and instructions. Material produced in the same charge of batch equipment constitutes a batch; material produced in different charges of the same batch equipment should be included in the same batch only if it can be homogenized as above. The maximum batch size should be 350 ft^3 of active carbon."

The test requirements will comply with this position.

> "If an adsorbent other than impregnated activated carbon is proposed or if the mesh size distribution is different from the specification in Table 5.1 of ANSI N509-1976, the proposed adsorbent should have demonstrated the capability to perform as well as or better than activated carbon in satisfying the specifications in Table 5.1 of ANSI N509-1976."

Impregnated activated carbon is used in the ABWR SGTS design. The performance requirements of Table 5-1 of ANSI N509 will be met.

> "If impregnated activated carbon is used as the adsorbent, the adsorber system should be designed for an average atmosphere residence time of 0.25 sec per two inches of adsorbent bed. The adsorption unit should be designed for a maximum loading of 2.5 mg of total iodine (radioactive plus stable) per gram of activated carbon. No more than 5% of impregnant (50 mg of impregnant per gram of carbon) should be used. The radiation stability of the type of carbon

specified should be demonstrated and certified (see Section C.1.b of this guide for the design source term)."

The design is in compliance with this position.

(j) "Adsorber cells should be designed, constructed, and tested in accordance with the requirements of Section 5.2 of ANSI N509-1976."

The design is in compliance with this position.

(k) "The design of the adsorber section should consider possible iodine desorption and adsorbent auto-ignition that may result from radioactivity-induced heat in the adsorbent and concomitant temperature rise. Acceptable designs include a low-flow air bleed system, cooling coils, water sprays for the adsorber section, or other cooling mechanisms. Any cooling mechanism should satisfy the single-failure criterion. A low-flow air bleed system should satisfy the single-failure criterion for providing low-humidity (less than 70% relative humidity) cooling air flow."

The design is in compliance with this position. The design utilizes cooling process fans for any necessary cooling of the charcoal.

(l) "The system fan, its mounting, and the ductwork connections should be designed, constructed, and tested in accordance with the requirements of Sections 5.7 and 5.8 of ANSI N509-1976."

The design is in compliance with this position.

(m) "The fan or blower used on the ESF atmosphere cleanup system should be capable of operating under the environmental conditions postulated, including radiation."

The design is in compliance with this position.

(n) "Ductwork should be designed, constructed, and tested in accordance with the provisions of Section 5.10 of ANSI N509-1976."

The design is in compliance with this position.

(o) "Ducts and housings should be laid out with a minimum of ledges, protrusions, and crevices that could collect dust and moisture and that could impede personnel or create a hazard to them in the performance of their work. Straightening vanes should be installed where required to ensure representative air flow measurement and uniform flow distribution through cleanup components."

The design is in compliance with this position.

"Dampers should be designed, constructed, and tested in accordance with the provisions of Section 5.9 of ANSI N509-1976."

The design is in compliance with this position.

(4) Maintenance

(a) "Accessibility of components and maintenance should be considered in the design of ESF atmosphere cleanup systems in accordance with the provisions of Section 2.3.8 of ERDA 76-21 and Section 4.7 of ANSI N509-1976."

The design is in compliance with this position.

(b) "For ease of maintenance, the system design should provide for a minimum of three feet from mounting frame to mounting frame between banks of components. If components are to be replaced, the dimension to be provided should be the maximum length of the component plus a minimum of three feet."

The design is in compliance with this position.

(c) "The system design should provide for permanent test probes with external connections in accordance with the provisions of Section 4.11 of ANSI N509-1976."

The design is in compliance with this position.

(d) "Each ESF atmosphere cleanup train should be operated at least 10 hours per month, with the heaters on (if so equipped), in order to reduce the buildup of moisture on the adsorbers and HEPA filters."

The design is in compliance with this position.

(e) "The cleanup components (i.e., HEPA filters, prefilters, and adsorbers) should not be installed while active construction is still in progress."

Installation of the SGTS will comply with this position.

(5) In-Place Testing Criteria

(a) "A visual inspection of the ESF atmosphere cleanup system and all associated components should be made before each in-place air flow distribution test, DOP test, or activated carbon adsorber section leak test in accordance with the provisions of Section 5 of ANSI N510-1975."

The system test procedures will comply with this position.

(b) "The air flow distribution to the HEPA filters and iodine adsorbers should be tested in place for uniformity initially and after maintenance affecting the flow distribution. No velocity reading shall exceed ±20% of the calculated average. The testing should be conducted in accordance with the provisions of Section 9 of "Industrial Ventilation" and Section 8 of ANSI N510-1975."

Acceptance tests, performed after completion of initial construction and after any system modifications or repair (per Table 1 of ANSI N510), will comply with this position. The guidance in "Testing of Ventilation Systems," Section 9 of "Industrial Ventilation," and ANSI N510 will be applied to any testing performed.

(c) "The in-place DOP test for HEPA filters should conform to Section 10 of ANSI N510-1975. HEPA filter sections should be tested in place (1) initially, (2) at least once per 18 months thereafter, and (3) following painting, fire, or chemical release in any ventilation zone communicating with the system to confirm a penetration of less than 0.05% at rated flow. An engineered safety-feature air filtration system satisfying this condition can be considered to warrant a 99% removal efficiency for particulates in accident dose evaluations. HEPA filters that fail to satisfy this condition should be replaced with filters qualified pursuant to regulatory position C.3.d of this guide. If the HEPA filter bank is entirely or only partially replaced, an in-place DOP test should be conducted."

The surveillance test procedure will comply with this position. Technical Specification 3.6.4.3 (Chapter 16) complies with this position.

"If any welding repairs are necessary on, within, or adjacent to the ducts, housing, or mounting frames, the filters and adsorbers should be removed from the housing during such repairs. The repairs should be completed prior to periodic testing, filter inspection, and in-place testing. The use of silicone sealants or any other temporary patching material on filters, housing, mounting frames, or ducts should not be allowed."

The SGTS maintenance procedures will comply with this position.

(d) "The activated carbon adsorber section should be leak tested with a gaseous halogenated hydrocarbon refrigerant in accordance with Section 12 of ANSI N510-1975 to ensure that bypass leakage through the adsorber section is less than 0.05%. After the test is completed, air flow through the unit should be maintained until the residual refrigerant gas in the effluent is less than 0.01 ppm. Adsorber leak testing should be conducted (1) initially, (2) at least once per 18 months thereafter, (3) following removal of an adsorber sample for laboratory testing if the integrity of the adsorber section is affected, and (4)

following painting, fire, or chemical release in any ventilation zone communicating with the system."

Surveillance testing is provided to comply with this position.

(6) Laboratory Testing Criteria for Activated Carbon

(a) "The activated carbon adsorber section of the ESF atmosphere cleanup system should be assigned the decontamination efficiencies given in Table 2 for elemental iodine and organic iodides if the following conditions are met:"

The carbon bed is 15 cm deep. Per Table 2, the decontamination efficiency for bed depths 10 cm or greater is 99%. The radiological analyses described in Subsections 15.6.5 and 15.7.4 assume a charcoal adsorber efficiency of less than 99%.

(1) "The adsorber section meets the conditions given in Regulatory Position C.5.d of this guide."

As stated previously, the ABWR SGTS complies with Position C.5.d.

(2) "New activated carbon meets the physical property specifications given in Table 5.1 of ANSI N509-1976."

Activated carbon installed in the SGTS will be covered by purchase requirements to meet the physical properties specified in Table 5-1 of ANSI N509.

(3) "Representative samples of used activated carbon pass the laboratory tests given in Table 2.

Surveillance testing is provided to comply with this position. This position is interpreted as follows. Representative samples of used activated carbon will be laboratory tested with a frequency defined in Footnote c of Table 2 and as reflected in the technical specifications. Also, per Footnote c of Table 2, a representative sample is defined in Position C.6.b. Testing will be performed at a relative humidity of 70% per ASTM D3803. The test acceptance criterion will be a methyl iodide penetration of less than 0.175%. ASTM D3803 is cited in Table 5-1 of ANSI N509-1980 for tests equivalent to those specified in Test 5.b of ANSI N509-1976.

"If the activated carbon fails to meet any of the above conditions, it should not be used in engineered-safety-feature adsorbers."

The activated carbon for the SGTS will meet the conditions of Position 6.a(i), (ii) and (iii).

(b) "The efficiency of the activated carbon adsorber section should be determined by laboratory testing of representative samples of the activated carbon exposed

simultaneously to the same service conditions as the adsorber section. Each representative sample should be not less than two inches in both length and diameter, and each sample should have the same qualification and batch test characteristics as the system adsorbent. There should be a sufficient number of representative samples located in parallel with the adsorber section to estimate the amount of penetration of the system adsorbent throughout its service life. The design of the samplers should be in accordance with the provisions of Appendix A of ANSI N509-1976. Where the system activated carbon is greater than two inches deep, each representative sampling station should consist of enough two-inch samples in series to equal the thickness of the system adsorbent. Once representative samples are removed for laboratory test, their positions in the sampling array should be blocked off."

The detailed design will be in compliance with this position.

"Laboratory tests of representative samples should be conducted, as indicated in Table 2 of this guide, with the test gas flow in the same direction as the flow during service conditions. Similar laboratory tests should be performed on an adsorbent sample before loading into the adsorbers to establish an initial point for comparison of future test results. The activated carbon adsorber section should be replaced with new unused activated carbon meeting the physical property specifications of Table 5.1 of ANSI N509-1976 if (1) testing in accordance with the frequency specified in Footnote c of Table 2 results in a representative sample failing to pass the applicable test in Table 2, or (2) no representative sample is available for testing."

The SGTS design and testing will comply with this position. Physical property testing is addressed in the response to Position C.6.a(2).

6.B SRP 6.5.1, Table 6.5.1-1 Compliance Assessment

The following provides a comparison between the instrumentation specified in SRP 6.5.1, Table 6.5.1-1, and the instrumentation provided in the ABWR SGTS design. Justification is provided for those items that deviate from the SRP.

The selection and location of instrumentation for the ABWR SGTS was reexamined during system design to rationalize the operator interface. Instrumentation strictly required for monitoring the operation of the SGTS to mitigate offsite releases is provided in the main control room (MCR) on panel displays designed for that purpose. Monitoring, of course, is a fundamental plant requirement specified in GDC 13. Instrumentation used for testing or maintenance is located at the local instrument rack.

There are two redundant SGTS trains located in two adjacent rooms. Per Regulatory Guide 1.52, each train, as a part of a maintenance program, should be operated 10 hours per month with space heaters on. This surveillance testing provides indications of the component malfunctions and the inefficient components may be promptly replaced. An effective surveillance testing and prompt replacement of inefficient components will assure the proper functioning of the SGTS. Refer to Technical Specification, Standby Gas Treatment System.

There are two basic parameters that are important to assure SGTS function: (1) secondary containment pressure and (2) charcoal adsorber inlet relative humidity. If the secondary containment pressure is less than the ambient pressure, any release from the plant passes through and is treated and monitored by the SGTS. If the inlet relative humidity to the charcoal adsorber is less than or equal to 70%, then credit for a 99% efficiency may be taken (although charcoal performance at higher humidities provides significant decontamination factors). If an operator confirms that the secondary containment pressure is negative with respect to ambient on all faces of the building and the relative humidity is less than 70% entering the adsorber, then the system is functioning as intended to mitigate calculated offsite doses.

The ABWR SGTS design provides four divisional differential pressure transmitters with high and low alarms monitoring secondary containment pressure with respect to ambient pressure outside each of the four walls of the reactor building. In addition, single divisions of moisture measurement with high alarms are provided in the filter housing upstream of the charcoal adsorber, providing a direct measurement of relative humidity. As a secondary indication of relative humidity, a single division of inlet temperature (upstream of the process electric heaters) and a single division of temperature indication (upstream of charcoal adsorber) are also provided. The maximum possible relative humidity may be calculated based on the temperature rise across the heater. These basic parameters each have main control room indication and alarm.

Unit Inlet or Outlet

	Local Panel	Main Control Room
SRP Table 6.5.1-1	Flow rate (indication)	Flow rate (recorded indication, high alarm and low alarm signals)
ABWR SGTS	F(1) 018B(C)	Inlet flow rate (recorded indication, low alarm); FRS618B(C), FI618B(C). Inlet temperature (indication); TI602B(C)

Local: ABWR design is in compliance with SRP Table 6.5.1-1.

MCR: SRP Table 6.5.1-1 includes a high alarm signal to detect high flow rate at the system inlet or outlet. The ABWR SGTS does not have this high alarm. A flow rate higher than the design value may indicate a potential failure in the fan or an increase in secondary containment leakage. However, as long as a negative pressure is maintained in the secondary containment, SGTS function is accomplished. Low negative secondary containment pressure is alarmed in the main control room. Operation of the SGTS to mitigate offsite releases will not be affected by the absence of the high flow alarm at the MCR.

In addition, the ABWR SGTS design provides inlet temperature indication which is used in concert with downstream temperature measurement as a second means to determine relative humidity in the process stream to the charcoal adsorber. Direct moisture measurement is the primary means to determine charcoal adsorber inlet relative humidity and is discussed in a later section of this response.

Moisture Separator

	Local Panel	Main Control Room
SRP Table 6.5.1-1	Pressure drop (indication) (optional high alarm signal)	None
ABWR SGTS	Pressure drop (indication); DPI003B(C), DPI103B(C)	Pressure drop (indication); DPI603B(C)

The ABWR design is in compliance with SRP Table 6.5.1-1.

Electric Heater

	Local Panel	Main Control Room
SRP Table 6.5.1-1	Status indication	None
ABWR SGTS	Hand switch, status indication	Hand switch, status indication

Local: The ABWR design exceeds the local panel requirements of SRP Table 6.5.1-1.

MCR: The ABWR design exceeds the control room requirements specified in SRP Table 6.5.1-1.

Space Between Heater and Prefilter

	Local Panel	Main Control Room
SRP Table 6.5.1-1	Temperature (indication, high alarm and low alarm signals)	Temperature (indication, high alarm, low alarm, trip alarm signals)
ABWR SGTS	None	Temperature (high alarm, low alarm and trip signals); TS005B(C)

Local: Temperature indication required for testing is available from the control room. Operation of the SGTS to mitigate offsite releases will not be affected by the absence of temperature indication or the high and low alarms at the local panel.

MCR: The high alarm and trip in the ABWR SGTS design is used to alert the operator and shut down the electric heater should the heater temperature increase above 110°C. This is slightly above the 107°C referenced in ASME N509, Subsection 5.5.1, but well within the available margin. Per ASME N509, Section 4.9, higher temperatures (above 150°C) may lead to significant desorption of iodine from the charcoal. Potential ignition of the charcoal occurs at a much higher temperature (290°C per ERDA 76-21, Subsection 3.4.2) and is also not a concern. Note that the ABWR SGTS charcoal will meet the more stringent physical property specification of ASME N509, Table 5-1, for ignition temperature (330°C) [see also the response to Position C.3.i, Appendix 6.5A].

Relative humidity is maintained by controlling the temperature across the heater. A low temperature alarm indicates a potential failure such that the relative humidity in the process stream may not be maintained. Under these circumstances, the operator should stop the malfunctioning train and initiate the redundant train to mitigate the offsite releases. Additional temperature and relative humidity indication and high alarms are provided between the first HEPA filter and the charcoal adsorber and are described in a later section of this response. The

ABWR design meets the intent of SRP 6.5.1-1. See the discussion of basic parameters at the beginning of this response for an understanding of ABWR SGTS instrumentation design.

Prefilter

	Local Panel	Main Control Room
SRP Table 6.5.1-1	Pressure drop (indication, high alarm signal)	None
ABWR SGTS	Pressure drop (indication); DPI007	Pressure drop (indication); DPI607B(C)

The SRP includes a high alarm signal for monitoring pressure drop across the prefilter. A higher than designed differential pressure indicates filter clogging reducing the flow across the filter. This condition is alarmed in the MCR via the low flow (flowmeter) alarm. The redundant SGTS train is available to mitigate any potential offsite release. The ABWR design does not have this alarm. Local instrumentation for prefilter pressure drop measurement is used for testing purposes. A high alarm signal would not be appropriate during testing given the direct indication available on the instrument rack and main control room (MCR). Low system flow is alarmed in the control room should fan runback occur from any cause. Operation of the SGTS to mitigate any potential offsite release will not be affected by the absence of the alarm on the local panel.

First HEPA Filter (Pre-HEPA)

	Local Panel	Main Control Room
SRP Table 6.5.1-1	Pressure drop (indication, high alarm signal)	Pressure drop (recorded indication)
ABWR SGTS	Pressure drop (indication); DPI008	Pressure drop (indication); DPI608B(C)

Local: The local panel has indication for confirming the proper pressure drop across the HEPA filter during testing. Like the prefilter, a high alarm signal would not be appropriate during testing given the direct indication available on the instrument rack. Low system flow is alarmed in the control room should fan runback occur. Operation of the SGTS to mitigate any potential offsite release will not be affected by the absence of a local high alarm. During system operation, it is not expected that the HEPA filter would exhibit an excessively high pressure drop by virtue of the periodic testing for pressure drop and filter efficiency performed in accordance with the schedules specified in the Technical Specifications.

MCR: ABWR design complies with SRP Table 6.5.1-1.

Space between First HEPA Filter and Adsorber

	Local Panel	Main Control Room
SRP Table 6.5.1-1	None	None
ABWR SGTS	None	Moisture (single division of redundant indication MI611, MI612 each with high alarm). Temperature (single division of indication, control and trip, high alarm); TI610, TS009, TS610. Space heater hand switch and status indication.

As mentioned previously, direct moisture indication is provided to assure relative humidity is less than 70% in the gases entering the charcoal adsorber. Relative humidity is a fundamental parameter for system function and has been emphasized in instrumentation design. Space heaters with related temperature and status instrumentation are provided both upstream and downstream of the charcoal. Discussion of this instrumentation is provided in a later section, "Space between Adsorber and Second HEPA Filter."

The ABWR SGTS design exceeds the requirements of SRP Table 6.5.1-1 and ASME N509, Table 4-1.

Adsorber

	Local Panel	Main Control Room
SRP Table 6.5.1-1	None	None
ABWR SGTS	Pressure drop (indication); DPI022	Temperature (high alarm); TS013B(C) Pressure drop (indication); DPI612, DP1622

The ABWR SGTS design provides single division of high temperature alarm both directly upstream and downstream of the charcoal adsorber. The purpose of this alarm is to alert the operator to the potential for desorption of iodine from the charcoal (if the SGTS is operating post-accident) or of a failure in one of the temperature control and high alarm circuits associated with the heaters. The setpoint for this alarm signal is 155°C. Should temperature reading and alarms indicate a continued and uncontrolled high temperature during SGTS operation, deluge actuation may be warranted. Pressure drop is provided at a local rack (for testing) and in the MCR.

The ABWR SGTS design exceeds the requirements of SRP Table 6.5.1-1.

Space between Adsorber and Second HEPA Filter (Post-HEPA)

	Local Panel	Main Control Room
SRP Table 6.5.1-1	Temperature (two-stage high alarm signal)	Temperature (indication, two-stage high alarm signal)
ABWR SGTS	None	Temperature (single division of indication, control and trip, two stage high alarm); TI616, TS015, TS616 Space heater hand switch and status indication.

Local: Local temperature alarms are not provided since the area is not continuously manned. Appropriate alarms and indication are provided in the control room along with the necessary controls to respond to a high temperature signal.

MCR: The intent of the SRP MCR position, judging from Footnote 3 of Table 4-1 of ASME N509, is to provide an alarm on high temperature and signal for manual deluge actuation on a high-high temperature alarm. The space heaters are operational only when SGTS is on standby. High temperature gives an alarm in the MCR and cuts power to the heaters. The space heaters will restart when low temperature coincident with space heater operation (i.e., not of service) is detected.

Each space heater heating element is provided with status indication. Each space heater fan is provided with a hand switch and status indication.

The need for deluge actuation is discussed in a later section of this Appendix, “Deluge Valves,” and also in Subsection 6.5.1.3.3, “SGTS Filter Train.”

Second HEPA (Post-HEPA)

	Local Panel	Main Control Room
SRP Table 6.5.1-1	Pressure drop (indication, high alarm signal)	None
ABWR SGTS	Pressure drop (indication); DPI017, DPI027	Pressure drop (indication); DPI627, DPI617

Local: The local panel has indication for confirming the proper pressure drop across the HEPA filter during testing. Like the prefilter and first HEPA filter, a high alarm signal would not be appropriate during testing given the direct indication on the rack. Low system flow is alarmed

in the control room should fan runback occur. Operation of the SGTS to mitigate any potential offsite release will not be affected by the absence of a local high alarm.

MCR: Pressure drop indication is provided.

[Process] Fan

	Local Panel	Main Control Room
SRP Table 6.5.1-1	(Optional hand switch and status indication)	Hand switch, status indication
ABWR SGTS	None	Hand switch, status indication (run/stop)

The ABWR design complies with SRP Table 6.5.1-1.

Cooling Fan

	Local Panel	Main Control Room
SRP Table 6.5.1-1	(Optional hand switch, status indication)	Hand switch, status indication
ABWR SGTS	None	Hand switch, status indication (run/stop)

Cooling fan will automatically start following the signal of the filter train stoppage for the adsorber. The ABWR SGTS design complies with SRP Table 6.5.1-1.

Valve/Damper Operator

	Local Panel	Main Control Room
SRP Table 6.5.1-1	(Optional status indication)	Status indication
ABWR SGTS	None	Hand switch, status indication (Open/closed), position indication; POI601

The ABWR SGTS design exceeds the requirements of SRP Table 6.5.1-1. Valve position indication (and control) is provided on the inlet dampers, F002B(C).

Deluge Valves

	Local Panel	Main Control Room
SRP Table 6.5.1-1	Hand switch, status indication	Hand switch, status indication
ABWR SGTS	None	None

Manual deluge capability is provided on the ABWR SGTS with local indication at valves. Inadvertent wetting of the charcoal has led to system unavailability in operating plants. Remote deluge control, either from a local panel or the main control room is not provided. Whenever the deluge capability is required, an operator has to connect the fire hose connection to the SGTS deluge connection and manually open both valves. As such status indication (open/closed) is not required. System availability is improved without compromising fire protection requirements. ASME N509 shows a move away from remote-operated valves. Hand switches and status indications are required only for power actuated valves.

System Inlet to Outlet

	Local Panel	Main Control Room
SRP Table 6.5.1-1	None	Summation of pressure drop across total system, high alarm signal
ABWR SGTS	None	None

Per ASME N5099 $\Sigma\Delta P$ across the entire system is not required if each component whose pressure drop is subject to change over time has individual alarm or indication in main control room. Each component whose pressure drop is subject to change over time has pressure drop indication in the MCR. The ABWR SGTS design meets the requirements of SRP Table 6.5.1-1.

Other—Secondary Containment Differential Pressure

	Local Panel	Main Control Room
SRP Table 6.5.1-1	None	None
ABWR SGTS	None	Differential pressure (four divisions of indication and high and low alarms)

The ABWR SGTS design exceeds the requirements of SRP Table 6.5.1-1. Measurement of secondary containment pressure with respect to the environs is a fundamental system parameter which is specified within, and is under the control of, the ABWR SGTS design.

Other—Loop Seals

	Local Panel	Main Control Room
SRP Table 6.5.1-1	None	None
ABWR SGTS	None	Level (two divisions of low alarm)

Loop seals are provided within the dryer and filter train and in the piping downstream of the filter train discharge block valves. Redundant low level alarms are provided to assure loop seal level is maintained. The loop seals function to continuously and passively drain any accumulation of water in the SGTS. Accumulation of water in piping to the stack has been a problem in operating plants.

6.C Containment Debris Protection for ECCS Strainers

6C.1 Background

NRC Bulletin No. 93-02, "Debris Plugging of Emergency Core Cooling Suction Strainers," references NRC guidance and highlights the need to adequately accommodate debris in design by focusing on an incident at the Perry Nuclear Plant. GEH reviewed the concerns addressed by NRC Bulletin 93-02 and has reviewed the design of the ABWR for potential weaknesses in coping with the bulletin's concerns. GEH has determined that the ABWR design is more resistant to these problems for a number of reasons as discussed in the following.

The ultimate concern raised by the Perry incident was the deleterious effect of debris in the suppression pool and how it could impact the ability to draw water from the suppression pool during an accident. The ABWR design has committed to following the guidance provided in Regulatory Guide 1.82 and additional guidance as described below. The ABWR is designed to inhibit debris generated during a LOCA from preventing operation of the Residual Heat Removal (RHR), Reactor Core Isolation Cooling (RCIC) and High Pressure Core Flooder (HPCF) systems.

6C.2 ABWR Mitigating Features

The ABWR has substantially reduced the amount of piping in the drywell relative to earlier designs and consequently the quantity of insulation required. Furthermore, there is no equipment in the wetwell spaces that requires insulation or other fibrous materials. The ABWR design conforms with the guidance provided by the NRC for maintaining the ability for long-term recirculation cooling of the reactor and containment following a LOCA.

The Perry incident was not the result of a LOCA but rather debris entering the Suppression Pool during normal operation. The arrangement of the drywell and wetwell/wetwell airspace on a Mark III containment (Perry) is significantly different from that utilized in the ABWR design. In the Mark III containment, the areas above the suppression pool water surface (wetwell airspace) are substantially covered by grating with significant quantities of equipment installed in these areas. Access to the wetwell airspace (containment) of a Mark III is allowed during power operations. In contrast, on the ABWR the only connections to the suppression pool are 10 drywell connecting vents (DCVs), and access to the wetwell or drywell during power operations is prohibited. The DCVs will have horizontal steel plates located above the openings that will prevent any material falling in the drywell from directly entering the vertical leg of the DCVs. This arrangement is similar to that used with the Mark II connecting vent pipes. Vertically oriented trash rack construction will be installed around the periphery of the horizontal steel plate to intercept debris. The trash rack design shall allow for adequate flow from the drywell to wetwell. In order for debris to enter the DCV it would have to travel horizontally through the trash rack prior to falling into the vertical leg of the connecting vents. Thus the ABWR is resistant to the transport of debris from the drywell to the wetwell.

In the Perry incident, the insulation material acted as a sepia to filter suspended solids from the suppression pool water. The Mark I, II, and III containments have all used carbon steel in their suppression pool liners. This results in the buildup of corrosion products in the suppression pool which settle out at the bottom of the pool until they are stirred up and resuspended in the water following some event (SRV lifting). In contrast, the ABWR liner of the suppression pool is fabricated from stainless steel which significantly lowers the amount of corrosion products which can accumulate at the bottom of the pool.

Since the debris in the Perry incident was created by roughing filters on the containment cooling units a comparison of the key design features of the ABWR is necessary. In the Mark III design more than 1/2 of the containment cooling units are effectively located in the wetwell airspace. For the ABWR there are no cooling fan units in the wetwell air space. Furthermore the design of the ABWR Drywell Cooling Systems does not utilize roughing filters on the intake of the containment cooling units.

In the event that small quantities of debris enter the suppression pool, the Suppression Pool Cleanup System (SPCU) will remove the debris during normal operation. The SPCU is described in Section 9.5.9 and shown in Figure 9.5-1. The SPCU is designed to provide a continuous cleanup flow of 250 m^3/h. This flow rate is sufficiently large to effectively maintain the suppression pool water at the required purity. The SPCU system is intended for continuous operation and the suction pressure of the pump is monitored and provides an alarm on low pressure. Early indication of any deterioration of the suppression pool water quality will be provided if significant quantities of debris were to enter the suppression pool and cause the strainer to become plugged resulting in a low suction pressure alarm.

The suction strainers at Perry did not meet the current regulatory requirements. The ABWR ECCS suction strainers will utilize a “T” arrangement with conical strainers on the 2 free legs of the “T”. This design separates the strainers so that it minimizes the potential for a contiguous mass to block the flow to an ECCS pump. The ABWR design also has additional features not utilized in earlier designs that could be used in the highly improbable event that all suppression pool suction strainers were to become plugged. The alternate AC (Alternating Current) independent water addition mode of RHR allows water from the Fire Protection System to be pumped to the vessel and sprayed in the wetwell and drywell from diverse water sources to maintain cooling of the fuel and containment. The wetwell can also be vented at low pressures to assist in cooling the containment.

6C.3 RG 1.82 Improvement

All ECCS strainers will at a minimum be sized to conform with the guidance provided in Reg Guide 1.82 for the most severe of all postulated breaks.

The following clarifying assumptions will also be applied and will take precedence:

(1) The debris generation model will utilize right angle cones acting in both directions;

(2) The amount of insulation debris generated will be assumed to be 100% of the insulation in a distance of 3 L/D of the postulated break within the right angle cones including targeted insulation;

(3) All of the insulation debris generated will be assumed to be transported to the suppression pool;

(4) The debris in the suppression pool will be assumed to remain suspended until it is captured on the surface of a strainer.

The sizing of the RHR suction strainers will assume that the insulation debris in the suppression pool is evenly distributed to the 3 pump suctions. The strainer size will be determined based on this amount of insulation debris and then increased by a factor of 3. The flow rate used for calculating the strainer size will be the runout system flow rate.

The sizing of the RCIC and HPCF suction strainers will conform to the guidance of Reg Guide 1.82 and will assume that the insulation debris in the suppression pool is proportionally distributed to the pump suctions based on the flow rates of the systems at runout conditions. The strainers assumed available for capturing insulation debris will include 2 RHR suction strainers and a single HPCF or RCIC suction strainer.

6C.4 Discussion Summary

In summary, the ABWR design includes the necessary provisions to prevent debris from impairing the ability of the RCIC, HPCF, and RHR systems to perform their required post-accident functions. Specifically, the ABWR does the following:

(1) The design is resistant to the transport of debris to the suppression pool.

(2) The suppression pool liner is stainless steel, which significantly reduces corrosion products.

(3) The SPCU system will provide early indication of any potential problem.

(4) The SPCU System operation will maintain suppression pool cleanliness.

(5) The equipment installed in the drywell and wetwell minimize the potential for generation of debris.

(6) The ECCS suction strainers meet the current regulatory requirements unlike the strainers at the incident plants.

(7) The RHR suction strainers will apply an additional factor of 3 design margins.

6C.5 Strainer Sizing Analysis Summary

A preliminary analysis was performed to assure that the above requirements could be satisfied using strainers compatible with the suppression pool design as shown by Figure 1.2-13i. The following summarizes the results, which indicate strainer sizes that are acceptable within the suppression pool design constraints.

Each loop of an ECCS system has a single suppression pool suction strainer configured in a T shape with a screen region at the two ends of the T cross member. Analysis determined the area of each screen region. Thus, RHR with three loops has six screen regions. The HPCF with two loops has four screen regions, and the RCIC has two screen regions. The characteristic dimension given for the screens in the results below indicates a surface area consisting of a circle with a diameter of the dimension plus a cylinder with a diameter and length of the dimension.

By the requirements above, all of the debris deposits on the strainers. The distribution of debris volume to the strainer regions was determined as a fraction of the loop flow splits based on runout flow. Debris on the screen creates a pressure drop as predicted by NUREG-0897, which is referenced by R.G. 1.82. The equation for NUKON™ insulation on page 3-59 of NUREG-0897 was used for this analysis. The NUKON™ debris created pressure drop equation is a function of the thickness of debris on the screen (which is a function of debris volume), the velocity of fluid passing through the screen (runout flow used), and the screen area. The debris created pressure drop was applied in an equation as follows; the static head at the pump inlet is equal to the hydraulic losses through the pipe and fittings, plus the pressure drop through the debris on the strainers, plus the hydraulic loss through the unplugged strainer, plus a margin equal to approximately 10% of the static head at the pump inlet, and plus the required NPSH. The static head takes into account the suppression pool water level determined by the draw down calculated as applicable for a main steam line break scenario. A summary provided in Table 6C-1, and a summary of the analysis results is provided in Table 6C-2.

By making realistic assumptions, the following additional conservatisms are likely to occur, but they were not applied in the analysis. No credit in water inventory was taken for water additions from feedwater flow or flow from the condensate storage tank as injected by RCIC or HPCF. Also, for the long term cooling condition, when suppression pool cooling is used instead of the low pressure flooder mode (LPFL), the RHR flow rate decreases from runout (1130 m^3/h) to rated flow (954 m^3/h), which reduces the pressure drop across the debris.

Table 6C-1 Debris Analysis Input Parameters

Estimated debris created by a main steam line break	2.6 m^3
RHR runout flow (Figure 5.4-11, note 13)	1130 m^3/h
HPCF runout flow (Table 6.3-8)	890 m^3/h
RCIC controlled constant flow (Table 5.4-2)	182 m^3/h
Debris on RHR screen region, 3 RHR loops operating	0.434 m^3
Debris on HPCF screen region	0.369 m^3
Debris on RCIC screen region	0.097 m^3
RHR required NPSH (Table 6.3-9)	2.4 m
HPCF required NPSH (Table 6.3-8)	2.2 m
RCIC required NPSH (Table 5.4-2)	7.3 m
RHR pipe, fittings and unplugged strainer losses*	0.60 m
HPCF pipe, fittings and unplugged strainer losses*	0.51 m
RCIC pipe, fittings and unplugged strainer losses*	0.39 m
Suppression pool static head above pump suction	5.05 m

* Calculated hydraulic losses

Table 6C-2 Results of Analysis

RHR screen region area/characteristic dimension	5.66 m^2/1.20 m
HPCF screen region area/characteristic dimension	1.46 m^2/0.61 m
RCIC screen region area/characteristic dimension	0.27 m^2/0.26 m
Total ECCS screen region area	40.0 m^2

6.D HPCF Analysis Outlines

6D.1 Introduction

This appendix provides procedure outlines of suggested methods to perform inspections, tests, analyses and confirmations of the High Pressure Core Flooder (HPCF) System. These outlines use test data, plant geometry, and analyses to confirm requirements when the reactor is pressurized.

6D.2 Outline for Injection Flow Confirmation

Injection flow has two parts. The first is for the high pressure injection flow (182 m^3/h), and the second is for the low pressure injection flow (727 m^3/h).

6D.2.1 Input Data

HPCF System functional tests shall be performed on the high pressure flooder mode. Analysis shall be performed to convert the test results to the conditions of the design commitment. This analysis will be based upon:

- loop flow and pump discharge and suction pressure data from the flooder mode with the reactor at atmospheric pressure.
- plant as-built dimensional data from suppression pool surface level to RPV normal water level.
- supplier provided pump performance data.

6D.2.2 Preliminary

Determine the elevation distance between the suppression pool (S/P) water level and the RPV's normal water level. Call this the static head (Hs). See Figure 6D-1 for illustration.

Prepare the plant equipment related to each HPCF loop for a flow test from the S/P into the RPV. The RPV head could be on or off for these tests. The following described test-analysis plan is applicable to the two HPCF loops.

Perform a flow test from the suppression pool into the RPV; this is the flooder line. Measure the flow rate, Q1, with the HPCF flow element and the pressure head across the pump, H1, as the difference between the HPCF pump suction to pump outlet. Q1 will be greater than 727 m^3/h.

6.4.2.3 High Pressure Injection Flow

Analysis: Determine the hydraulic head loss, $H_{182,}$ for the flooder line for the high pressure flowrate, 182 m^3/h, from the head to flow-squared relationship as follows:

$$H_{182} = (H1 - Hs)(182/Q1)^2$$

Using the vendor supplied pump head-capacity test curve, determine the pressure head across the pump, $P_{182,}$ at the high pressure flow rate of 182 m^3/h.

Confirmation: (Convert all terms to consistent units)

$$P_{182} = H_{182} + Hs + 8.12 \text{ MPa} + \text{margin}$$

6.4.2.4 Low Pressure Injection Flow

Analysis: Determine the hydraulic head loss for the flooder line at 727 m^3/h, H_{727}, from the head to flow-squared relationship as follows:

$$H_{727} = (H1 - Hs)(727/Q1)^2$$

Using the vendor supplied pump head-capacity test curve, determine the pressure head across the pump, P_{727}, at a flow rate equal to 727 m^3/h.

Confirmation: (Convert all terms to consistent units)

$$P_{727} = H_{727} + Hs + 70.68 \text{ MPa} + \text{margin}$$

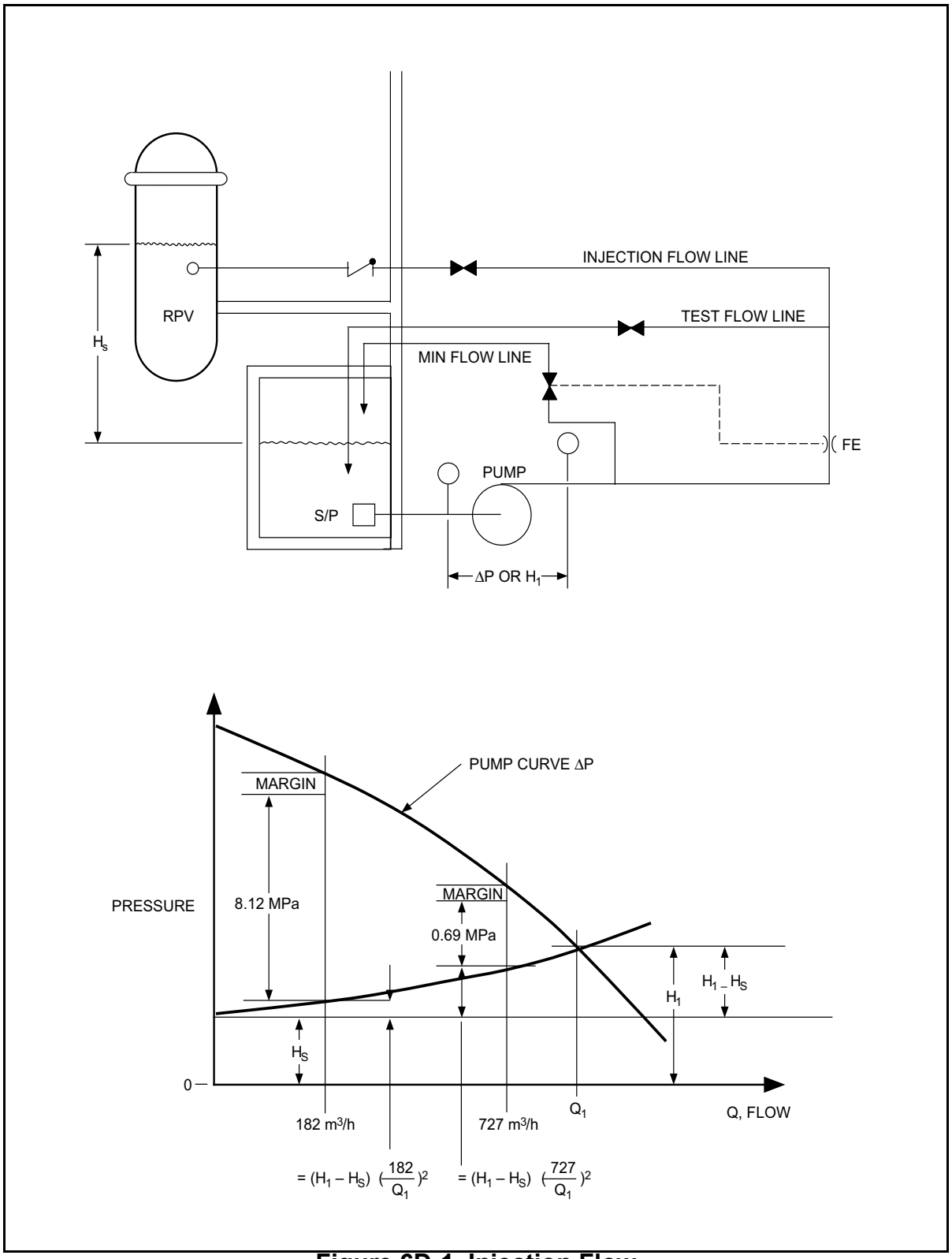

Figure 6D-1 Injection Flow

6E Additional Bypass Leakage Considerations

6E.1 Bypass Mechanism through ACS Interconnection

In accordance with the ABWR design, the ACS is provided to establish and maintain an inert atmosphere within the primary containment during all plant operating modes, except during shutdown for refueling or equipment maintenance or access for inspection at low reactor power. The ACS also maintains a slightly positive inert gas pressure in the primary containment during normal, abnormal and accident conditions to prevent air (oxygen) leakage into the inerted volumes from the secondary containment.

Isolation valves F040 and F041 (see Figure 6.2-39), which are normally open, make a direct flow path connection between drywell and the wetwell air space. Therefore, in the event of a pipe break inside the drywell, this direct flow path will become an additional steam bypass leakage path. However, this additional bypass leakage path will close in a few seconds, because of automatic closure of these valves upon receipt of a LOCA signal. These isolation valves are designed to close automatically within 15 seconds after receiving a high drywell pressure (13.83 kPa) signal.

Failure of the above two isolation valves to close, which may result in a continuous bypass pathway, is highly unlikely. Division II is the power source for these two valves, and they are fail-to-close safe. Four independent sensors (one in each electrical division) detect high pressure in the drywell. Isolation system uses reverse logic (i.e., valve in open position with a low drywell pressure signal), and the signal uses two-out-of-four logic. A loss of signal will de-energize the solenoid resulting in valve closure.

6E.2 Other Bypass Pathways

All containment systems which communicate with the drywell and/or wetwell air space were examined for any potential steam bypass pathways during LOCA events. A careful review of their P&IDs revealed no additional bypass pathways.

6E.3 Effect on Existing Bypass Analyses

The ACS interconnection, as described above, may become a bypass pathway during LOCA. This pathway will introduce steam bypass leakage area, in addition to the bypass leakage area considered and analyzed in the existing bypass analyses (Subsections 6.2.1.1.5.3 and 6.2.1.1.5.4). Simple engineering analyses were performed to assess effect of this additional bypass leakage area on these two existing bypass analyses.

6E.3.1 Estimate of Effective Bypass Leakage Area ($A/\sqrt{K}$)

The flow area, A, through the ACS interconnection is determined by the 50A piping of Sch 80, which is about .00186m^2. In determining the total loss coefficient, only flow losses were

considered. Pipe friction losses were ignored for conservatism. A total flow loss coefficient of 11.5 was determined, which comprises of the following:

a.	Standard entrance loss coefficient:	0.5
b.	Flow loss coefficient for two standard globe valves in series:	8.0
c.	Flow loss coefficient for two standard elbows in series:	2.0
d.	Standard exit loss coefficient:	1.0

The effective bypass leakage area, $A/\sqrt{K}$, is approximately $5.57 \times 10^{-4} m^2$.

6E.3.2 Duration of Bypass Flow

Bypass flow through this additional bypass pathway will terminate upon closure of the isolation valves. As noted above, these valves will close within 15 seconds after receiving a high drywell pressure 13.83 kPaG signal. It was determined that the drywell pressure for a small($.00186 m^2$) steam break LOCA will reach to 13.83 kPaG in about 14 seconds after a LOCA. Allowing for the 15 seconds of valve closure time, this additional bypass pathway will be active for the first 29 seconds only. For assessment purposes, a continuous effective flow area of $5.57 \times 10^{-4} m^2$ during the first 29 seconds was assumed. Decrease in flow area during the valve closure period was ignored for conservatism.

6E.3.3 Effect on Existing Bypass Analyses

(a) Bypass Capability Without Sprays and Heat Sinks (Subsection 6.2.1.1.5.3)

This analysis, which assumes continuous steam bypass leakage over 6-h period, determined an acceptable effective flow area of 5 cm^2. In this analysis, a stratified atmosphere model, which assumed steam only flow through the leakage path, was assumed to ensure conservative results.

It was estimated that this additional bypass leakage area of $5.57 \times 10^{-4} m^2$ will result in a total flow of about 4.54 kg of steam over the 35-s period. This additional flow of 4.54 kg of steam is about 0.1% (which is almost negligible) of the total flow of steam over the 6-h period in the existing analysis.

Given inherent conservatism in the analysis assumption, it is concluded that this ACS interconnection bypass pathway will have a negligible effect on the existing analysis results.

(b) Bypass Capability with Sprays and Heat Sinks

This analysis, which takes credit for heat sinks as well as manual actuation of sprays 30 minutes after the wetwell airspace pressure reaches 103.7 kPaG, determined an acceptable effective bypass leakage area of 50 cm^2.

Given manual actuation of sprays as defined above, it is concluded that this ACS interconnection bypass pathway should have no impact on this bypass capability analysis.

6E.4 Conclusion

In view of the above results, it is concluded that the suppression pool bypass mechanism through interconnection in the atmospheric control system (ACS) will have no effect on the existing bypass leakage analyses in Subsections 6.2.1.1.5.3 and 6.2.1.1.5.4.