HITACHI

GE Hitachi Nuclear Energy

25A5675AG
Revision 5
November 2010

ABWR
Design Control Document
Tier 2

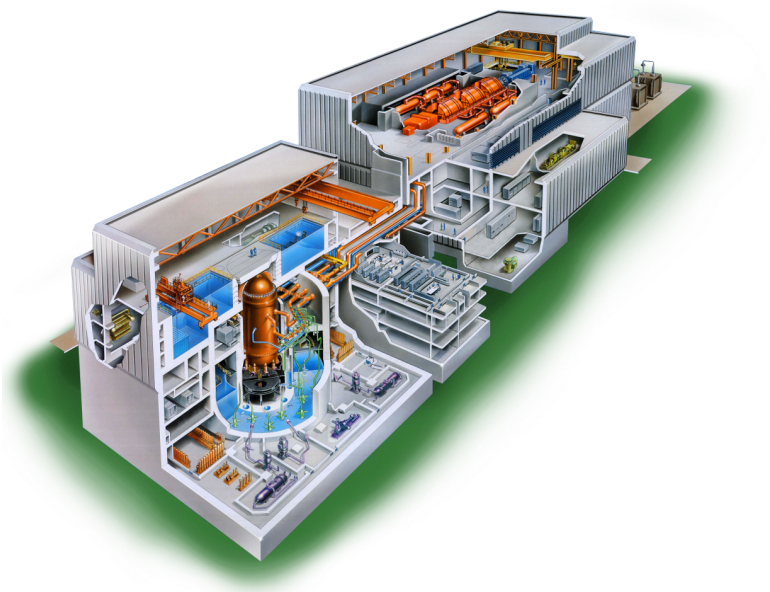

Chapter 5

Reactor Coolant System and Connected Systems

Copyright 1994, 2010, GE-Hitachi Nuclear Energy Americas LLC
All Rights Reserved

Chapter 5
Table of Contents

5.0 Reactor Coolant System and Connected Systems 5.1-1

5.1 Summary Description 5.1-1
5.1.1 Schematic Flow Diagrams 5.1-3
5.1.2 Piping and Instrumentation Diagrams 5.1-3
5.1.3 Elevation Drawings 5.1-3

5.2 Integrity of Reactor Coolant Pressure Boundary 5.2-1
5.2.1 Compliance with Codes and Code Cases 5.2-1
5.2.2 Overpressure Protection 5.2-1
5.2.3 Reactor Coolant Pressure Boundary Materials 5.2-10
5.2.4 Preservice and Inservice Inspection and Testing of Reactor Coolant Pressure Boundary 5.2-23
5.2.5 Reactor Coolant Pressure Boundary and Core Cooling Systems Leakage Detection 5.2-31
5.2.6 COL License Information 5.2-46
5.2.7 References 5.2-47

5.3 Reactor Vessel 5.3-1
5.3.1 Reactor Vessel Materials 5.3-1
5.3.2 Pressure/Temperature Limits 5.3-9
5.3.3 Reactor Vessel Integrity 5.3-11
5.3.4 COL License Information 5.3-18
5.3.5 References 5.3-19

5.4 Component and Subsystem Design 5.4-1
5.4.1 Reactor Recirculation System 5.4-1
5.4.2 Steam Generators (PWR) 5.4-8
5.4.3 Reactor Coolant Piping 5.4-8
5.4.4 Main Steamline Flow Restrictors 5.4-9
5.4.5 Main Steamline Isolation System 5.4-11
5.4.6 Reactor Core Isolation Cooling System 5.4-16
5.4.7 Residual Heat Removal System 5.4-26
5.4.8 Reactor Water Cleanup System 5.4-44
5.4.9 Main Steamlines and Feedwater Piping 5.4-49
5.4.10 Pressurizer 5.4-51
5.4.11 Pressurizer Relief Discharge System 5.4-51
5.4.12 Valves 5.4-51
5.4.13 Safety/Relief Valves 5.4-52
5.4.14 Component Supports 5.4-53
5.4.15 COL License Information 5.4-54
5.4.16 References 5.4-55

5A Method Of Compliance For Regulatory Guide 1.150 ..... 5A-1
5A.1 Introduction 5A-1
5A.2 Discussion 5A-1
5A.3 Inspection System Performance Checks 5A-1
5A.4 Calibration 5A-3
5A.5 Examination 5A-4

Table of Contents (Continued)

5A.6 Beam Profile 5A-4
5A.7 Scanning Weld Metal Interface 5A-5
5A.8 Recording and Sizing 5A-5
5A.9 Reporting Of Results 5A-6
5A.10 Conclusion 5A-6

5B RHR Injection Flow And Heat Capacity Analysis Outlines 5B-1
5B.1 Introduction 5B-1
5B.2 Outline For Injection Flow Confirmation 5B-1
5B.3 Outline For Heat Exchanger Confirmation 5B-3

Chapter 5
List of Tables

Table 5.2-1 Reactor Coolant Pressure Boundary Components Applicable Code Cases 5.2-49

Table 5.2-1a Reactor Coolant Pressure Boundary Components Applicable Code Cases 5.2-50

Table 5.2-2 Systems Which May Initiate During Overpressure Event 5.2-52

Table 5.2-3 Nuclear System Safety/Relief Valve Setpoints Set Pressures and Capacities 5.2-52

Table 5.2-4 Reactor Coolant Pressure Boundary Materials 5.2-53

Table 5.2-5 BWR Water Chemistry 5.2-56

Table 5.2-6 LDS Control and Isolation Function vs. Monitored Process Variables 5.2-57

Table 5.2-7 Leakage Sources vs. Monitored Trip Alarms 5.2-58

Table 5.2-8 Examination Categories 5.2-59

Table 5.2-9 Ultrasonic Examination of RPV: Reg. Guide 1.150 Compliance 5.2-72

Table 5.3-1 Comparison of 40 Year Fluences 5.3-20

Table 5.3-2 Key Dimensions of RPV System Components and Acceptable Variations 5.3-20

Table 5.4-1 Reactor Recirculation System Design Characteristics 5.4-56

Table 5.4-1a Net Positive Suction Head (NPSH) Available to RCIC Pumps 5.4-57

Table 5.4-2 Design Parameters for RCIC System Components 5.4-58

Table 5.4-3 RHR Pump/Valve Logic 5.4-61

Table 5.4-4 RHR Heat Exchanger Design and Performance Data 5.4-63

Table 5.4-5 Component and Subsystem Relief Valves 5.4-64

Table 5.4-6 Reactor Water Cleanup System Equipment Design Data 5.4-65

Chapter 5
List of Figures

Figure 5.1-1 Rated Operating Conditions of the ABWR....5.1-4
Figure 5.1-2 Coolant Volumes of the ABWR....5.1-5
Figure 5.1-3 Nuclear Boiler System P&ID (Sheets 1–11)....5.1-6
Figure 5.2-1 Safety-Action Valve Lift Characteristics....5.2-73
Figure 5.2-2 MSIV Closure with Flux Scram and Installed Safety/Relief Valve Capacity....5.2-74
Figure 5.2-3 Safety/Relief Valve Schematic Elevation....5.2-75
Figure 5.2-4 Safety /Relief Valve and Steamline Schematic....5.2-76
Figure 5.2-5 Not Used....5.2-77
Figure 5.2-6 Not Used....5.2-77
Figure 5.2-7a RPV Examination Areas....5.2-78
Figure 5.2-7b Typical Piping System Isometric (Feedwater Line from RPV to Valve F005A)....5.2-79
Figure 5.3-1 Minimum Temperature Required Versus Reactor Pressure....5.3-21
Figure 5.3-2a Reactor Pressure Vessel System Key Features....5.3-22
Figure 5.3-2b Pump Penetration and Shroud Leg Arrangement....5.3-23
Figure 5.3-3 Fast Neutron Flux as Function of Water Thickness....5.3-24
Figure 5.4-1 Reactor Internal Pump Cross Section....5.4-66
Figure 5.4-2 ABWR Recirculation Flow Path....5.4-67
Figure 5.4-3 Reactor Internal Pump Performance Characteristics....5.4-68
Figure 5.4-6 Main Steamline Flow Restrictor....5.4-70
Figure 5.4-7 Main Steamline Isolation Valve....5.4-71
Figure 5A-1 GERIS-2000 Depth Sizing Results....5A-7
Figure 5B-1 Injection Flow....5B-5

5.0 Reactor Coolant System and Connected Systems

5.1 Summary Description

The Reactor Coolant System (RCS) includes those systems and components which contain or transport fluids coming from or going to the reactor core. These systems form a major portion of the reactor coolant pressure boundary (RCPB). This chapter provides information regarding the RCS and pressure-containing appendages out to and including isolation valving. This grouping of components is defined as the RCPB.

The RCPB includes all pressure-containing components such as pressure vessels, piping, pumps, and valves, which are:

(1) Part of the RCS.

or

(2) Connected to the RCS up to and including any and all of the following:

(a) The outermost containment isolation valve in piping which penetrates the primary reactor containment.

(b) The second of the two valves normally closed during normal reactor operation in system piping which does not penetrate primary reactor containment.

(c) The RCS safety/relief valve (SRV) piping.

This chapter also deals with various subsystems which are closely allied to the RCPB (Section 5.4):

Pressure Relief System

The nuclear Pressure Relief System(PRS) protects the RCPB from damage due to overpressure by providing pressure-operated relief valves that can discharge steam from the nuclear system to the suppression pool. The PRS also acts to automatically depressurize the nuclear system in the event of a loss-of-coolant accident (LOCA) in which the Feedwater, Reactor Core Isolation Cooling (RCIC) and High Pressure Core Flooder (HPCF) Systems fail to maintain reactor vessel water level. Depressurization of the nuclear system allows the low pressure flooder systems to supply enough cooling water to adequately cool the fuel.

Subsection 5.2.5 establishes the limits on nuclear system leakage inside the drywell so that appropriate action can be taken before the integrity of the nuclear system process barrier is impaired.

The reactor vessel and appurtenances are described in Section 5.3. The major safety consideration for the reactor vessel is the ability of the vessel to function as a radioactive material barrier. Various combinations of loading are considered in the vessel design. The

vessel meets the requirements of applicable codes and criteria. The possibility of brittle fracture was considered, and suitable design, material selection, material surveillance activity, and operational limits were established that avoid conditions where brittle fracture was possible.

Reactor Recirculation System

The Reactor Recirculation System (RRS) provides coolant flow through the core. Adjustment of the core coolant flow rate changes reactor power output, thus providing a means of following plant load demand without adjusting control rods. The RRS is designed to provide a slow coastdown of flow so that fuel thermal limits cannot be exceeded as a result of recirculation system malfunctions. The reactor recirculation pumps are located inside the reactor vessel, thus eliminating large piping connections to the reactor vessel below the core and also eliminating the RRS piping.

The main steamline flow restrictors of the venturi-type are installed in each main steam nozzle on the reactor vessel inside the primary containment. The restrictors are designed to limit the loss of coolant resulting from a main steamline break inside or outside the primary containment. The coolant loss is limited so that reactor vessel water level remains above the top of the core during the time required for the main steamline isolation valves to close. This action protects the fuel barrier.

Two isolation valves are installed on each main steamline. One is located inside and the other outside the primary containment. If a main steamline break occurs inside the containment, closure of the isolation valve outside the primary containment seals the primary containment itself. The main steamline isolation valves (MSIVs) automatically isolate the RCPB when a pipe break occurs outside the containment. This action limits the loss of coolant and the release of radioactive materials from the nuclear system.

Reactor Core Isolation Cooling System

The Reactor Core Isolation Cooling (RCIC)System provides makeup water to the core during a reactor shutdown in which feedwater flow is not available. The system is started automatically upon receipt of a low reactor water level signal or manually by the operator. Water is pumped to the core by a turbine pump driven by reactor steam.

Residual Heat Removal System

The Residual Heat Removal (RHR) System includes a number of pumps and heat exchangers that can be used to cool the nuclear system under a variety of situations. During normal shutdown and reactor servicing, the RHR System removes residual and decay heat. The RHR System allows decay heat to be removed whenever the main heat sink (main condenser) is not available (i.e., hot standby). One mode of RHR operation allows the removal of heat from the primary containment following a LOCA. Another operational mode of the RHR System is low pressure flooder (LPFL).

The LPFL is an engineered safety feature for use during a postulated LOCA. Operation of the LPFL is presented in Section 6.3.

Reactor Water Cleanup System

The Reactor Water Cleanup (CUW) System recirculates a portion of reactor coolant through a filter-demineralizer to remove particulate and dissolved impurities with their associated corrosion and fission products from the reactor coolant. It also removes excess coolant from the reactor system under controlled conditions.

5.1.1 Schematic Flow Diagrams

Schematic flow diagrams (Figures 5.1-1 and 5.1-2) of the RCS show major components, principal pressures, temperatures, flow rates, and coolant volumes for normal steady-state operating conditions at rated power.

5.1.2 Piping and Instrumentation Diagrams

Piping and instrumentation diagrams (P&ID) covering the systems included within RCS and connected systems are presented as follows:

(1) Nuclear Boiler System (Figure 5.1-3)

(2) Main Steam (Figure 5.1-3, Sheets 2 & 3)

(3) Feedwater (Figure 5.1-3, Sheet 4)

(4) Recirculation System (Figure 5.4-4)

(5) Reactor Core Isolation Cooling System (Figure 5.4-8)

(6) Residual Heat Removal System (Figure 5.4-10)

(7) Reactor Water Cleanup System (Figure 5.4-12)

5.1.3 Elevation Drawings

The elevation drawings showing the principal dimensions of the reactor and connecting systems in relation to the containment are provided in Figures 1.2-2 and 1.2-3.

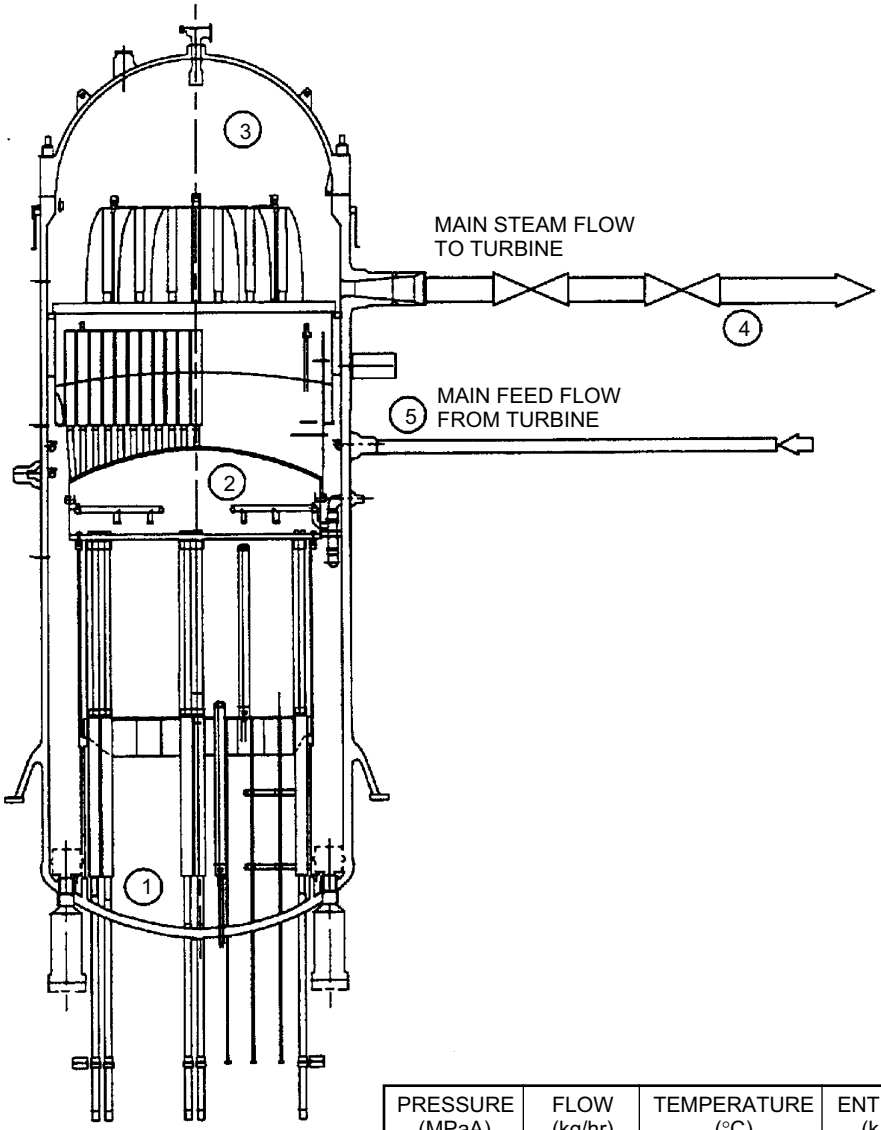

	PRESSURE (MPaA)	FLOW (kg/hr)	TEMPERATURE (°C)	ENTHALPY (kJ/bg)
1 CORE INLET	7.4	52.2×10^6	278	1227
2 CORE OUTLET	7.2	52.2×10^6	288	1500
3 SEPARATOR OUTLET (STEAM DOME)	7.2	7.64×10^6	287	2770
4 STEAMLINE (2ND ISOLATION VALVE)	6.9	7.64×10^6	285	2770
5 FEEDWATER INLET (INCLUDES CLEANUP RETURN FLOW)	7.3	7.78×10^6	216	926

Figure 5.1-1 Rated Operating Conditions of the ABWR

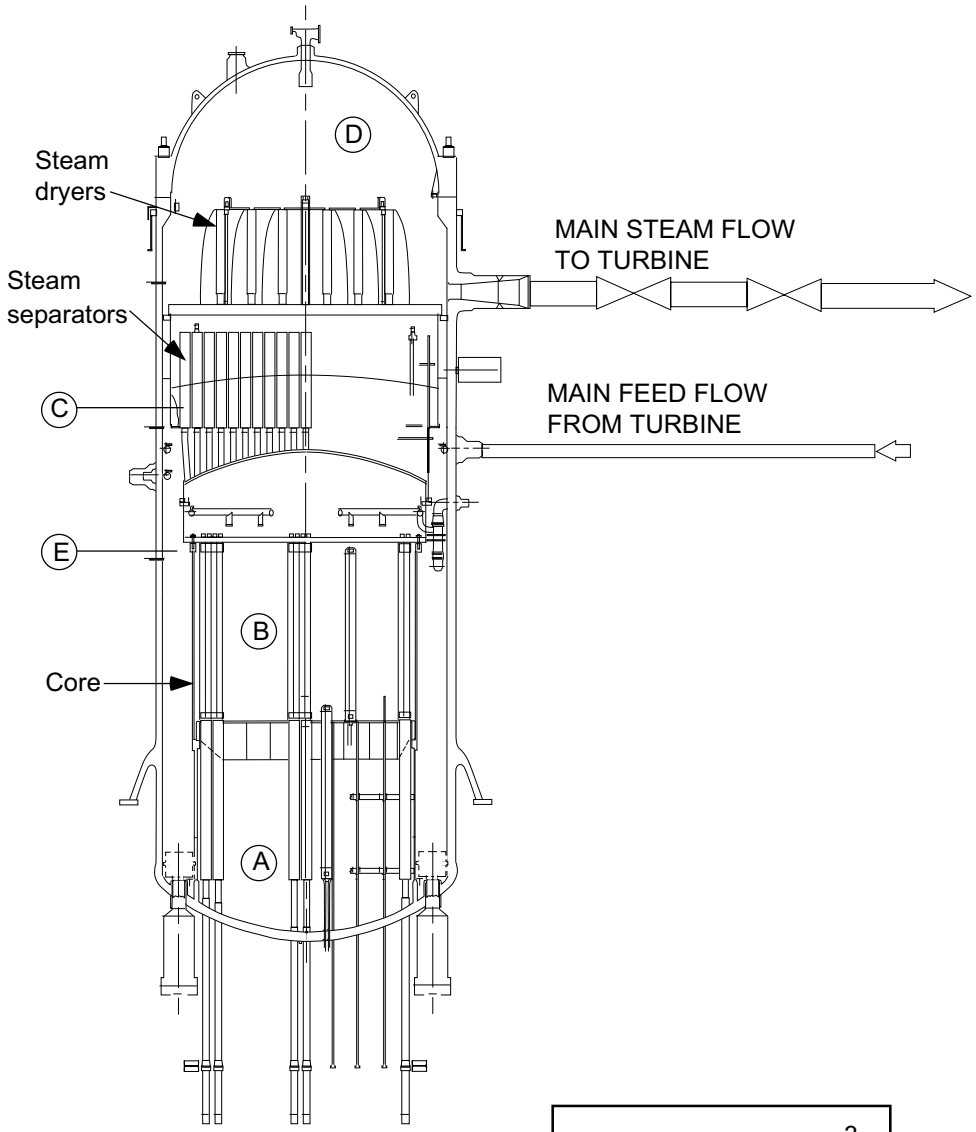

	VOLUME OF FLUID (M^3)
A LOWER PLENUM	102
B CORE	70
C UPPER PLENUM AND SEPARATORS	60
D DOME (ABOVE NORMAL WATER LEVEL)	236
E DOWNCOMER REGION	214

Figure 5.1-2 Coolant Volumes of the ABWR

The following figure is located in Chapter 21 :

Figure 5.1-3 Nuclear Boiler System P&ID (Sheets 1–11)

5.2 Integrity of Reactor Coolant Pressure Boundary

This section discusses measures employed to provide and maintain the integrity of the reactor coolant pressure boundary (RCPB) for the plant design lifetime.

5.2.1 Compliance with Codes and Code Cases

5.2.1.1 Compliance with 10CFR50, Section 50.55a

Table 3.2-3 shows the ASME Code applied to components. Code edition, applicable addenda, and component dates will be in accordance with 10CFR50.55a.

5.2.1.2 Applicable Code Cases

The reactor pressure vessel and appurtenances and the RCPB piping, pumps, and valves will be designed, fabricated, and tested in accordance with the applicable edition of the ASME Code, including addenda that were mandatory at the order date for the applicable components. Section 50.55a of 10CFR50 requires Code case approval for Class 1, 2, and 3 components. These Code cases contain requirements or special rules which may be used for the construction of pressure-retaining components of Quality Group Classification A, B, and C. The various ASME Code cases that may be applied to components are listed in Table 5.2-1.

Regulatory Guides 1.84, 1.85 and 1.147 provide a list of ASME Design and Fabrication Code cases that have been generically approved by the Regulatory Staff. Code cases on this list may, for design purposes, be used until appropriately annulled. Annulled cases are considered active for equipment that has been contractually committed to fabrication prior to the annulment.

5.2.2 Overpressure Protection

This subsection evaluates systems that protect the RCPB from overpressurization.

5.2.2.1 Design Basis

Overpressure protection is provided in conformance with 10CFR50 Appendix A, General Design Criterion 15. Preoperational and startup instructions are given in Chapter 14.

5.2.2.1.1 Safety Design Bases

The nuclear Pressure Relief System has been designed to:

(1) Prevent overpressurization of the nuclear system that could lead to the failure of the RCPB.

(2) Provide automatic depressurization for small breaks in the nuclear system occurring with maloperation of both the RCIC System and the HPCF System so that the low pressure flooder (LPFL) mode of the RHR System can operate to protect the fuel barrier.

(3) Permit verification of its operability.

(4) Withstand adverse combinations of loadings and forces resulting from normal, upset, emergency, or faulted conditions.

5.2.2.1.2 Power Generation Design Bases

The nuclear Pressure Relief System SRVs have been designed to meet the following power generation bases:

(1) Discharge to the containment suppression pool.

(2) Correctly reclose following operation so that maximum operational continuity is obtained.

5.2.2.1.3 Discussion

The ASME Boiler and Pressure Vessel Code (B&PV) requires that each vessel designed to meet Section III be protected from overpressure under upset conditions.

The SRV setpoints are listed in Table 5.2-3 and satisfy the ASME Code specifications for safety valves because all valves open at less than the nuclear system design pressure of 8.62 MPaG.

The automatic depressurization capability of the nuclear Pressure Relief System is evaluated in Sections 6.3 and 7.3.

The following criteria are used in selection of SRVs:

(1) Must meet requirements of ASME Code, Section III.

(2) Must qualify for 100% of nameplate capacity credit for the overpressure protection function.

(3) Must meet other performance requirements such as response time, etc., as necessary to provide relief functions.

The SRV discharge piping is designed, installed, and tested in accordance with ASME Code Section III.

5.2.2.1.4 Safety/Relief Valve Capacity

SRV capacity of this plant is adequate to limit the primary system pressure, including transients, to the requirements of ASME B&PV Code Section III (Nuclear Power Plant Components), up to and including applicable addenda. The essential ASME requirements which are met by this analysis follow.

It is recognized that the protection of vessels in a nuclear power plant is dependent upon many protective systems to relieve or terminate pressure transients. Installation of pressure-relieving devices may not independently provide complete protection. The safety valve sizing evaluation gives credit for operation of the scram protective system which may be tripped by either one of two sources: a direct or a flux trip signal. The direct scram trip signal is derived from position switches mounted on the MSIVs, the turbine stop valves, or from pressure switches mounted on the dump valve of the turbine control valve (TCV) hydraulic actuation system. The position switches are actuated when the respective valves are closing and following 15% travel of full stroke. The pressure switches are actuated when a fast closure of the TCVs is initiated. Credit is not taken for the power-operated mode. Credit is only taken for the SRV capacity which opens by the spring mode of operation direct from inlet pressure.

The rated capacity of the pressure-relieving devices shall be sufficient to prevent a rise in pressure within the protected vessel of more than 110% of the design pressure (1.10 x 8.62 MPaG=9.48 MPaG) for events defined in Section 15.2.

Full account is taken of the pressure drop on both the inlet and discharge sides of the valves. All combination SRVs discharge into the suppression pool through a discharge pipe from each valve, which is designed to achieve sonic flow conditions through the valve, thus providing flow independence to discharge piping losses.

5.2.2.2 Design Evaluation

5.2.2.2.1 Method of Analysis

The method of analysis is approved by the NRC or developed using criteria approved by the NRC.

5.2.2.2.2 System Design

A parametric study was conducted to determine the required steam flow capacity of the SRVs based on the following assumptions.

5.2.2.2.2.1 Operating Conditions

(1) Operating power = 4005 MWt [102% of nuclear boiler rated (NBR) power].

(2) Vessel dome pressure ð7.17 MPaG.

(3) Steam flow = 7844 t/h (102.7% of NBR steam flow).

These conditions are the most severe because maximum stored energy exists at these conditions. At lower power conditions, the transients would be less severe.

5.2.2.2.2.2 Transients

The overpressure protection system is capable of accommodating the most severe pressurization transient. The evaluation of transient behavior based on the core loading shown in Figure 4.3-1 demonstrates that MSIV closure with failure of direct scram (i.e., scram occurs on high flux) is the most severe pressurization transient. Other fuel designs and core loading patterns, including loading patterns similar to those shown in Figure 4.3-2, will not affect the conclusions of this evaluation. Analyses of this event will be performed each cycle and the results provided as information to the USNRC. Table 5.2-2 lists the systems which could initiate during the MSIV closure-flux scram events.

5.2.2.2.2.3 Safety/Relief Valve Transient Analysis Specification

(1) Simulated valve groups:

Spring-action safety mode - 5 groups

(2) Opening pressure setpoint (maximum safety limit):

Spring-action safety mode:

Group 1 8.12 MPaG
Group 2 8.19 MPaG
Group 3 8.26 MPaG
Group 4 8.33 MPaG
Group 5 8.39 MPaG

(3) Reclosure pressure setpoint (% of opening setpoint) both modes:

Maximum safety limit (used in analysis) — 96

Minimum operational limit — 90

The opening and reclosure setpoints are assumed at a conservatively high level above the nominal setpoints. This is to account for initial setpoint errors and any instrument setpoint drift that might occur during operation. Typically, the assumed setpoints in the analysis are at least 1% above the actual nominal setpoints. Conservative SRV response characteristics are also assumed; therefore, the analysis conservatively bounds all SRV operating conditions.

5.2.2.2.2.4 Safety/Relief Valve Capacity

Sizing of the SRV capacity is based on establishing an adequate margin from the peak vessel pressure to the vessel code limit (9.43 MPaG) in response to the reference transients.

The method used to determine total valve capacity is as follows:

Whenever the system pressure increases to the valve spring set pressure of a group of valves, these valves are assumed to begin opening and to reach full open at 103% of the valve spring set pressure. The lift characteristics assumed are shown in Figure 5.2-1.

5.2.2.2.3 Evaluation of Results

5.2.2.2.3.1 Safety/Relief Valve Capacity

The required SRV capacity is determined by analyzing the pressure rise from an MSIV closure with a flux scram transient. Results of this analysis are given in Figure 5.2-2. The peak vessel bottom pressure calculated is 8.79 MPaG, which is well below the acceptance limit of 9.48 MPaG. The results show that only 12 valves are required to meet the design requirement with adequate margin.

5.2.2.2.3.2 Pressure Drop in Inlet and Discharge

Pressure drop in the piping from the reactor vessel to the valves is taken into account in calculating the maximum vessel pressures. Pressure drop in the discharge piping to the suppression pool is limited by proper discharge line sizing to prevent back pressure on each SRV from exceeding 40% of the valve inlet pressure, thus assuring choked flow in the valve orifice and no reduction of valve capacity due to the discharge piping. Each SRV has its own separate discharge line.

5.2.2.3 Piping and Instrument Diagrams

Figures 5.1-3 and 5.2-3 show the schematic location of the following pressure-relieving devices for:

(1) The reactor coolant system.

(2) The primary side of the auxiliary or emergency systems interconnected with the primary system.

(3) Any blowdown or heat dissipation system connected to the discharge side of the pressure-relieving devices.

Schematic arrangements of the SRVs are shown in Figures 5.2-3 and 5.2-4.

5.2.2.4 Equipment and Component Description

5.2.2.4.1 Description

The nuclear Pressure Relief System consists of SRVs located on the main steamlines between the reactor vessel and the first isolation valve within the drywell. These valves protect against overpressure of the nuclear system.

The SRVs provide three main protection functions:

(1) Overpressure relief operation (the valves are opened using a pnuematic actuator upon receipt of an automatic or manually-initiated signal to reduce pressure or to limit a pressure rise).

(2) Overpressure safety operation (the valves function as safety valves and open to prevent nuclear system overpressurization—they are self-actuated by inlet steam pressure if not already signaled open for relief operation).

(3) Depressurization operation (the ADS valves open automatically as part of the Emergency Core Cooling System (ECCS) for events involving small breaks in the nuclear system process barrier. The location and number of the ADS valves can be determined from Figure 5.1-3.

Chapter 15 discusses the events which are expected to activate the primary system SRVs. The chapter also summarizes the number of valves expected to operate in the safety (steam pressure) mode of operation during the initial blowdown of the valves and the expected duration of this first blowdown. For several of the events, it is expected that the lowest set SRV will reopen and reclose as generated heat decays. The pressure increase and relief cycle will continue with lower frequency and shorter relief discharges as the decay heat drops off.

Remote manual actuation of the valves from the control room is recommended to minimize the total number of these discharges with the intent of achieving extended valve seat life.

The SRV is opened by either of the following two modes of operation:

(1) The safety (steam pressure) mode of operation is initiated when the direct and increasing static inlet steam pressure overcomes the restraining spring and the frictional forces acting against the inlet steam pressure at the main disk and the main disk moves in the opening direction at a faster rate than corresponding disk movements at higher or lower inlet steam pressures. The condition at which this action is initiated is termed the “popping pressure” and corresponds to the set-pressure value stamped on the nameplate of the SRV.

(2) The relief (power) mode of operation is initiated when an electrical signal is received at any of the solenoid valves located on the pneumatic actuator assembly. The solenoid valve(s) will open, allowing pressurized air to enter the lower side of the pneumatic cylinder piston which pushes the piston and the rod upwards. This action pulls the lifting mechanism of the main disk, thereby opening the valve to allow inlet steam to discharge through the SRV until the solenoid valve(s) closes again to cut off pressurized air to the actuator.

The pneumatic operator is so arranged that, if it malfunctions, it will not prevent the valve from opening when steam inlet pressure reaches the spring lift set pressure.

For overpressure SRV operation (self-actuated or spring lift mode), the spring load establishes the safety valve opening setpoint pressure and is set to open at a setpoint designated in Table 5.2-3. In accordance with the ASME Code, the full lift of this mode of operation is attained at a pressure no greater than 3% above the setpoint.

The spring-loaded valves are designed and constructed in accordance with ASME Code Section III, NB 7640, as safety valves with auxiliary actuating devices.

For overpressure relief valve operation (power-actuated mode), valves are provided with pressure-sensing devices which operate at the setpoints designated in Table 5.2-3. When the set pressure is reached, a solenoid air valve is operated, which in turn actuates the pneumatic piston/cylinder and linkage assembly to open the valve.

The maximum opening delay from when the pressure just exceeds the relief setpoint to start of disk motion is 0.5 seconds, of which the time to energize the SRV solenoid shall not exceed 0.4 seconds. When the piston is actuated, the delay time (maximum elapsed time between receiving the overpressure signal at the valve actuator and the actual start of valve motion) will not exceed 0.1 second. The maximum elapsed time between signal to actuator and full-open position of the valve will not exceed 0.25 seconds, with the SRV inlet pressure > 6.89 MPaG and initial SRV pressure < 4% of inlet pressure.

The SRVs can be operated individually in the power-actuated mode by remote manual controls from the main control room.

There is one solenoid provided on each SRV for non-ADS power-actuated operation. The logic for the SRV power-actuated relief function requires two trip signals to open the SRVs. The failure of one pressure transmitter will not cause the SRVs to open. Each SRV is provided with its own pneumatic accumulator and inlet check valve. The accumulator capacity is sufficient to provide one SRV actuation. Subsequent actuations for an overpressure event can be spring actuations to limit reactor pressure to acceptable levels.

The ADS utilizes selected SRVs for depressurization of the reactor as described in Section 6.3. Each of the SRVs utilized for automatic depressurization is equipped with an air accumulator and check valve arrangement. These accumulators assure that the valves can be held open following failure of the air supply to the accumulators. The accumulator capacity is sufficient for one actuation at drywell design pressure or five actuations at normal drywell pressure.

Each SRV discharges steam through a discharge line to a point below minimum water level in the suppression pool. The SRV discharge lines are classified as Quality Group C and Seismic Category I. The SRV discharge lines in the wetwell air space are classified as Quality Group C and Seismic Catgory I, all welds shall be non-destructively examined to the requirements for ASME Boiler and Pressure Vessel Code, Section III, Class 2 piping. SRV discharge piping from the SRV to the suppression pool consists of two parts. The first is attached at one end to the SRV and at its other end to the diaphragm floor penetration, which acts as a pipe anchor.

The second part of the SRV discharge piping extends from the diaphragm floor penetration to the SRV quencher in the suppression pool. Because the diaphragm floor acts as an anchor on this part of the line, it is physically decoupled from the main steam header.

As a part of the preoperational and startup testing of the main steamlines, movement of the SRV discharge lines will be monitored.

The SRV discharge piping is designed to limit valve outlet pressure to approximately 40% of maximum valve inlet pressure with the valve wide open. Water in the line more than about 1/2 of a meter above suppression pool water level would cause excessive pressure at the valve discharge when the valve is again opened. For this reason, two vacuum relief valves are provided on each SRV discharge line to prevent drawing an excessive amount of water into the line as a result of steam condensation following termination of relief operation. The SRVs are located on the main steamline piping rather than on the reactor vessel top head, primarily to simplify the discharge piping to the pool and to avoid the necessity of having to remove sections of this piping when the reactor head is removed for refueling. In addition, valves located on the steamlines are more accessible during a shutdown for valve maintenance.

The ADS automatically depressurizes the nuclear system sufficiently to permit the LPFL mode of the RHR System to operate as a backup for the HPCF. Further descriptions of the operation of the automatic depressurization feature are presented in Section 6.3 and Subsection 7.3.1.

In addition to playing a major role in preventing core damage, depressurization of the RPV (either manually, automatically, or as a result of a LOCA) can help mitigate the consequences of severe accidents in which fuel melting and vessel failure occur. If the RPV were to fail at an elevated pressure (greater than approximately 1.37 MPaG) high pressure melt injection could occur resulting in fragmented core debris being transported into the upper drywell. The resulting heatup of the upper drywell could pressurize and fail the drywell. This failure mechanism is eliminated if the RPV is depressurized. The opening of a single SRV is capable of depressurizing the vessel sufficiently to prevent high pressure melt ejection.

5.2.2.4.2 Design Parameters

The specified operating transients for components within the RCPB are presented in Subsection 3.9.1. Subsection 3.7.1 provides a discussion of the input criteria for design of Seismic Category I structures, systems, and components. The design requirements established to protect the principal components of the reactor coolant system against environmental effects are presented in Section 3.11.

5.2.2.4.3 Safety/Relief Valve

The design pressure and temperature of the valve inlet is 9.48 MPaG at 308°C.

The valves have been designed to achieve the maximum practical number of actuations consistent with state-of-the-art technology.

5.2.2.5 Mounting of Safety/Relief Valves

The safety/relief valves are located on the main steam piping.

The design criteria and analysis methods for considering loads due to the SRV discharge is contained in Subsection 3.9.3.3.

5.2.2.6 Applicable Codes and Classification

The vessel overpressure protection system is designed to satisfy the requirements of Section III of the ASME B&PV Code. The general requirements for protection against overpressure of Section III of the Code recognize that reactor vessel overpressure protection is one function of the reactor protective systems and allows the integration of pressure relief devices with the protective systems of the nuclear reactor. Hence, credit is taken for the scram protective system as a complementary pressure–protection device. The NRC has also adopted the ASME Codes as part of their requirements in the Code of Federal Regulations (10CFR50.55a).

5.2.2.7 Material Specifications

Material specifications for pressure–retaining components of SRVs are in Table 5.2-4.

5.2.2.8 Process Instrumentation

Overpressure protection process instrumentation is listed in Table 4 of Figure 5.1-3.

5.2.2.9 System Reliability

The system is designed to satisfy the requirements of Section III of the ASME Boiler and Pressure Vessel Code. The consequences of failure are discussed in Sections 15.1.4 and 15.6.1.

5.2.2.10 Inspection and Testing

The inspection and testing applicable SRVs utilize a quality assurance program which complies with Appendix B of 10CFR50.

The non-radioactive SRVs are tested at a suitable test facility in accordance with quality control procedures to detect defects and to prove operability prior to installation. The following tests are conducted:

(1) Hydrostatic test at specified test conditions (ASME Code requirement based on design pressure and temperature).

(2) Thermally stabilize the SRV to perform quantitative steam leakage testing at 1.03 MPaG below the SRV nameplate valve with an acceptance criterion not to exceed 0.45 kg/h leakage.

(3) Full flow SRV test for set pressures and blowdown where the valve is pressurized with saturated steam, with the pressure rising to the valve set pressure. (The SRV must be adjusted to open at the nameplate set pressure ±1%, unless a greater tolerance is established as permissible in the overpressure protection report in the valve design specification).

(4) Response time test where each SRV is tested to demonstrate acceptable response time based on system requirements.

The valves are installed as received from the factory. The GEH equipment specification requires certification from the valve manufacturer that design and performance requirements have been met. This includes capacity and blowdown requirements. The setpoints are adjusted, verified, and indicated on the valves by the vendor. Specified manual and automatic initiated signals for power actuation (relief mode) of each SRV are verified during the preoperational test program.

It is not feasible to test the SRV setpoints while the valves are in place. The valves are mounted on 10.36 MPaG primary service rating flanges, and can be removed for maintenance or bench checks and reinstalled during normal plant shutdowns. The valves will be tested to check set pressure in accordance with the requirements of the plant Technical Specifications. The external surface and seating of all SRVs are 100% visually inspected when the valves are removed for maintenance or bench checks. Valve operability is verified during the preoperational test program as discussed in Chapter 14.

5.2.3 Reactor Coolant Pressure Boundary Materials

5.2.3.1 Material Specifications

Table 5.2-4 lists the principal pressure-retaining materials and the appropriate material specifications for the RCPB components.

5.2.3.2 Compatibility with Reactor Coolant

5.2.3.2.1 PWR Chemistry of Reactor Coolant

Not applicable to BWRs.

5.2.3.2.2 BWR Chemistry of Reactor Coolant

A brief review of the relationships between water chemistry variables and RCS materials performance, fuel performance, and plant radiation fields is presented in this section and further information may be obtained from Reference 5.2-9.

The major environment-related materials performance problem encountered to date in the RCS of BWRs has been intergranular stress corrosion cracking (IGSCC) of sensitized austenitic stainless steel. IGSCC in sensitized material adjacent to welds in Type 304 and Type 316

stainless steel piping systems has occurred in the past. Substantial research and development programs have been undertaken to understand the IGSCC phenomenon and develop remedial measures. For the ABWR, IGSCC resistance has been achieved through the use of IGSCC resistant materials such as Type 316 Nuclear Grade stainless steel and stabilized nickel-based Alloy 600M and 182M.

Much of the early remedy-development work focused on alternative materials or local stress reduction, but recently the effects of water chemistry parameters on the IGSCC process have received increasing attention. Many important features of the relationship between BWR water chemistry and IGSCC of sensitized stainless steels have been identified.

Laboratory studies (References 5.2-1 and 5.2-2) have shown that, although IGSCC can occur in simulated BWR startup environments, most IGSCC damage probably occurs during power operation. The normal BWR environment during power operation is ~280°C water containing dissolved oxygen, hydrogen and small concentrations of ionic and non- ionic impurities (conductivity generally below 0.3 µS/cm at 25°C). It has been well documented that some ionic impurities (notably sulfate and chloride) aggravate IGSCC, and a number of studies have been made of the effects of individual impurity species on IGSCC initiation and growth rates (References 5.2-1 thru 5.2-5). This work clearly shows that IGSCC can occur in water at 280°C with 200 ppb of dissolved oxygen, even at low conductivity (low impurity levels), but the rate of cracking decreases with decreasing impurity content. Although BWR water chemistry guidelines for reactor water cannot prevent IGSCC, maintaining the lowest practically achievable impurity levels will minimize its rate of progression (References 5.2-3 and 5.2-7).

Stress corrosion cracking of ductile materials in aqueous environments is often restricted to specific ranges of corrosion potential*, so a number of studies of impurity effects on IGSCC have been made as a function of either corrosion potential or dissolved oxygen content (the dissolved oxygen content is the major chemical variable in BWR type water that can be used to manipulate the corrosion potential in laboratory tests) (Reference 5.2-8).

As the corrosion potential is reduced below the range typical of normal BWR power operation (+50 to –50 mV_{SHE}), a region of immunity to IGSCC appears at ~ –230 mV_{SHE}. It is apparent that a combination of corrosion potential (which can be achieved in a BWR by injecting usually < 1 ppm hydrogen into the feedwater) plus tight conductivity control (0.2 µS/cm) should permit BWRs to operate in a regime where sensitized stainless steels are immune to IGSCC. In the reactor vessel, the excess hydrogen reacts with the radiolytic oxygen and reduces the electrochemical corrosion potential (References 5.2-9 and 5.2-10). The Reactor Water Cleanup System (CUW), which processes reactor water at a rate of 2% of rated feedwater flow, removes both dissolved and undissolved impurities that enter the reactor water. The removal of dissolved impurities reduces the conductivity into the region of immunity to IGSCC.

* Also called electrochemical corrosion potential (ECP), see Reference 5.2-7.

Since the ABWR has no sensitized stainless steel, IGSCC control by hydrogen injection is not required. However, irradiation assisted stress corrosion cracking (IASCC) can occur in highly irradiated annealed stainless steel and nickel-based alloys. Preliminary in-reactor and laboratory studies (Reference 5.2-11) have indicated that HWC will be useful in mitigating IASCC.

In-reactor and laboratory evidence also indicates that carbon and low alloy steels show improved resistance to environmentally assisted cracking with both increasing water purity and decreasing corrosion potential (Reference 5.2-12).

5.2.3.2.2.1 Fuel Performance Considerations

Nuclear fuel is contained in Zircaloy tubes that constitute the first boundary or primary containment for the highly radioactive species generated by the fission process; therefore, the integrity of the tubes must be ensured. Zircaloy interacts with the coolant water and some coolant impurities. This results in oxidation by the water, increased hydrogen content in the Zircaloy (hydriding), and, often, buildup of a layer of crud on the outside of the tube. Excessive oxidation, hydriding, or crud deposition may lead to a breach of the cladding wall.

Metallic impurities can result in neutron losses and associated economic penalties which increase in proportion to the amount being introduced into the reactor and deposited on the fuel. With respect to iron oxide-type crud deposits, it can be concluded that operation within the BWR water chemistry guidelines (specifically the limits on feedwater iron levels) effectively precludes the buildup of significant deposits on fuel elements.

5.2.3.2.2.2 Radiation Field Buildup

The primary long-term source of radiation fields in most BWRs is Cobalt-60, which is formed by neutron activation of Cobalt-59. Corrosion products are released from corroding and wearing surfaces as soluble, colloidal, and particulate species. The formation of Cobalt-60 takes place after the corrosion products precipitate, adsorb, or deposit on the fuel rods. Subsequent re-entrainment in the coolant and deposition on out-of-core stainless steel surfaces leads to buildup of the activated corrosion products (such as Cobalt-60) on the out-of-core surfaces. The deposition may occur either in a loosely adherent layer created by particle deposition, or in a tightly adherent corrosion layer incorporating radioisotopes during corrosion and subsequent ion exchange. Water chemistry influences all of these transport processes. The key variables are the concentration of soluble Cobalt-60 in the reactor water and the characteristics of surface oxides. Thus, any reduction in the soluble Cobalt-60 concentration will have positive benefits.

As a means to reduce cobalt, GEH has reduced cobalt content in alloys to be used in high fluence areas such as fuel assemblies and control rods. In addition, cobalt-based alloys used for pins and rollers in control rods have been replaced with noncobalt alloys.

The Reactor Water Cleanup (CUW) System, which processes reactor water at a rate of 2% of rated feedwater flow, will remove both dissolved and undissolved impurities which can become

radioactive deposits. Reduction of these radioactive deposits will reduce occupational radiation exposure during operation and maintenance of the plant components.

Water quality parameters can have an influence on radiation buildup rates. In laboratory tests, the water conductivity and pH were varied systematically from a high purity base case. In each case, impurities increased the rate of Cobalt-60 uptake over that of the base case. The evidence suggests that these impurities change both the corrosion rate and the oxide film characteristics to adversely increase the Cobalt-60 uptake. Thus, controlling water purity should be beneficial in reducing radiation buildup.

Prefilming of stainless steel in Cobalt-60 free water, steam, or water/steam mixtures also appears to be a promising method to reduce initial radiation buildup rates. As an example, the radiation buildup rates are reduced significantly when samples are prefilmed in high temperature (288°C), oxygenated (200 ppb oxygen) water prior to exposure to Cobalt-60 containing water. Mechanical polishing and electropolishing of piping internal faces should also be effective in reducing radiation buildup.

5.2.3.2.2.3 Sources of Impurities

Various pathways exist for impurity ingress to the primary system. The most common sources of impurities that result in increases in reactor water conductivity are condenser cooling water inleakage, improper operation of ion exchange units, air inleakage, and radwaste recycle. In addition to situations of relatively continuous ingress, such as from low level condenser cooling water inleakage, transient events can also be significant. The major sources of impurities during such events are resin intrusions, organic chemical intrusions, inorganic chemical intrusions, and improper rinse of resins. Chemistry transients resulting from introduction of organic substances into the radwaste system comprised a significant fraction of the transients which have occurred.

The condensate cleanup system has two stages of water treatment. The first stage, high efficiency filters, is effective in removing insoluble solids, such as condensate system insoluble corrosion products. The second stage, the deep bed demineralizers, is effective in removing soluble solids, such as soluble corrosion products and impurities from possible condenser leakage.

The following factors are measured for control or diagnostic purposes to maintain proper water chemistry in the ABWR.

(1) Conductivity

Increasing levels of many ionic impurities adversely influence both the stress corrosion cracking behavior of Reactor Coolant System (RCS) materials, the rate of radiation field buildup and also can affect fuel performance. Therefore, conductivity levels in the reactor water should be maintained at the lowest level practically achievable.

(2) Chloride

Chlorides are among the most potent promoters of IGSCC of sensitized stainless steels and are also capable of inducing transgranular cracking of nonsenitized stainless steels. Chlorides also promote pitting and crevice attack of most RCS materials. Chlorides normally are associated with cooling water inleakage, but inputs via radwaste processing systems have also occurred.

Because chloride is implicated in several different corrosion phenomena, its level in reactor water should be kept as low as practically achievable during power operation.

(3) Sulfate

Recently, sulfate has been found to be more aggressive in promoting IGSCC of sensitized Type 304 stainless steel in BWR-type water (in laboratory tests) than any other ion, including chloride. Sulfates have also been implicated in environment-assisted cracking of high-nickel alloys and carbon and low-alloy steels. Sulfate ingress can result from cooling water inleakage, regenerant chemical inleakage, or resin ingress.

(4) Oxygen

Dissolved oxygen has been identified as a major contributor to IGSCC of sensitized stainless steels and reduction of oxygen content is known to reduce the tendency for pitting and cracks of most plant materials.

During power operation, most of the oxygen content of reactor water is due to the radiolysis of water in the core and, therefore, oxygen control cannot be achieved through traditional chemistry and operational practices. Oxygen control to low, plant-specific levels can be obtained through hydrogen injection. Control of reactor water oxygen during startup/hot standby may be accomplished by utilizing the de-aeration capabilities of the condenser. Independent control of control rod drive (CRD) cooling water oxygen concentration of <50 ppb during power operation is desirable to protect against IGSCC of CRD materials. Carbon steels exhibit minimal general corrosion and release rates in water with a conductivity less than 0.1 μS/cm if the concentration of oxygen is in the range of 20 to 1000 ppb. Regulation of reactor feedwater dissolved oxygen to 20-50 ppb during power operation will minimize corrosion of the condensate and feedwater system and reduce the possibility of locally increasing reactor water oxygen concentrations. It is important to note that for oxygen concentrations below 20 ppb, the data indicates an increase in the corrosion and corrosion product release for carbon steels.

(5) Iron

High iron inputs into the reactor have been associated with excessive fuel deposit buildup. Proper regulation of feedwater purity and dissolved oxygen levels will minimize iron transport to the reactor. This, in turn, should minimize fuel deposits and may assist in controlling radiation buildup.

(6) Fluoride

Fluoride promotes many of the same corrosion phenomena as chloride, including IGSCC of sensitized austenitic stainless steels, and may also have the potential to cause corrosion of Zircaloy core components. If fluoride is present, it will be measured for diagnostic purposes.

(7) Organics

Organic compounds can be introduced into the RCS via turbine or pump oil leakage, radwaste, or makeup water systems. Of particular concern is the possibility that halogenated organic compounds (e.g., cleaning solvents) may pass through the radwaste systems and enter the RCS, where they will decompose, releasing corrosive halogens (e.g., chlorides and fluorides).

(8) Silica

Silica, an indicator of general system cleanliness, provides a valuable indication of the effectiveness of the CUW System. Silica inputs are usually associated with incomplete silica removal in makeup water or radwaste facilities.

(9) pH

There are difficulties of measuring pH in low conductivity water. Nevertheless, pH of the liquid environment has been demonstrated to have an important influence on IGSCC initiation times for smooth stainless steel specimens in laboratory tests. In addition, pH can serve as a useful diagnostic parameter for interpreting severe water chemistry transients, and pH measurements are recommended for this purpose.

(10) Electrochemical Corrosion Potential

The electrochemical corrosion potential (ECP) of a metal is the potential it attains when immersed in a water environment. The ECP is controlled by various oxidizing agents, including copper and radiolysis products. At low reactor water conductivities, the ECP of stainless steel should be below –0.23 V_{SHE} to suppress IGSCC.

(11) Feedwater Hydrogen Addition Rate

A direct measurement of the feedwater hydrogen addition rate can be made using the hydrogen addition system flow measurement device and is used to establish the

plant-specific hydrogen flow requirements required to satisfy the limit for the ECP of stainless steel (Paragraph 10). Subsequently, the addition rate measurements can be used to help diagnose the origin of unexpected ECP changes.

(12) Recirculation System Water Dissolved Hydrogen

A direct measurement of the dissolved hydrogen content in the reactor water serves as a cross-check against the hydrogen gas flow meter in the injection system to confirm the actual presence and magnitude of the hydrogen addition rate.

(13) Main Steamline Radiation Level

The major activity in the main steamline is Nitrogen-16 produced by a (n, p) reaction with Oxygen-16 in the reactor water. Under conditions of hydrogen water chemistry, the fraction of the Nitrogen-16 that volatilizes with the steam increases with increased dissolved hydrogen. The main steamline radiation monitor readings increase with the hydrogen addition rate. During initial plant testing, the amount of hydrogen addition required to reduce the electrochemical corrosion potential to the desired range is determined at various power levels. Changes in the main steamline radiation monitor readings at the same power level indicate an over-addition (high readings) or under-addition (low readings) of hydrogen.

(14) Constant Extension Rate Test

Constant extension rate tests (CERTs) are accelerated tests that can be completed in a few days, for the determination of the susceptibility to IGSCC. It is useful for verifying IGSCC suppression during initial implementation of hydrogen water chemistry (HWC) or following plant outages that could have had an impact on system chemistry (e.g., condenser repairs during refueling).

(15) Continuous Crack Growth Monitoring Test

This test employs a reversing DC potential drop technique to detect changes in crack length in IGSCC test specimens. The crack growth test can be used for a variety of purposes, including the following:

(a) Initial verification of IGSCC suppression following HWC implementation.

(b) Quantitative assessment of water chemistry transients.

(c) Long-term quantification of the success of the HWC program.

The major impurities in various parts of a BWR under certain operating conditions are listed in Table 5.2-5. The plant systems have been designed to achieve these limits at least 90% of the time. The plant operators are encouraged to achieve better water quality by using good operating practice.

Water quality specifications require that erosion-corrosion resistant low alloy steels are to be used in susceptible steam extraction and drain lines. Stainless steels are considered for baffles, shields, or other areas of severe duty. Provisions are made to add nitrogen gas to extraction steamlines, feedwater heater shells, heater drain tanks, and drain piping to minimize corrosion during layup. Alternatively, the system may be designed to drain while hot so that dry layup can be achieved.

Condenser tubes and tubesheet are required to be made of titanium alloys.

Erosion-corrosion (E/C) of carbon steel components will be controlled as follows. The mechanism of E/C or, preferably, flow-assisted corrosion is complex and involves the electrochemical aspects of general corrosion plus the effects of mass transfer. Under single-phase flow conditions, E/C is affected by water chemistry, temperature, flow path, material composition and geometry. For wet steam (two phase), the percent moisture has an additional effect on E/C.

The potential deterioration of ABWR carbon steel piping from flow-assisted corrosion due to high velocity single-phase water flow and two-phase steam water flow will be addressed by using the EPRI developed CHECMATE (Chexal Horowitz Erosion Corrosion Methodology for Analyzing Two-phase Environments) computer code. CHECMATE will be used to predict corrosion rates and calculate the time remaining before reaching a defined acceptable wall thickness. Thus, this code will be used to identify areas where design improvements (piping design, materials selection, hydrodynamic conditions, oxygen content, temperature) are required to ensure adequate margin for extended piping performance on the ABWR design.

Water quality specifications for the ABWR require that the condenser be designed and erected so as to minimize tube leakage and facilitate maintenance. Appropriate features are incorporated to detect leakage and segregate the source. The valves controlling the cooling water to the condenser sections are required to be operable from the control room so that a leaking section can be sealed off quickly.

5.2.3.2.2.4 IASCC Considerations

Plant experience and laboratory tests indicate that irradiation assisted stress corrosion cracking (IASCC) can be initiated in solution annealed stainless steel above certain stress levels after exposure to radiation.

Extensive tests have also shown that IASCC has not occurred at fluence levels below ~$5x10^{20}$ neutron/cm^2 (E>1.6019 E-13J)) even at high stress levels. Experiments indicate that, as fluence increases above this threshold of $5x10^{20}$ neutron/cm^2, there is a decreasing threshold of sustained stress below which IASCC has not occurred. (Examination of top guides in two operating plants which have creviced designs has not revealed any IASCC.)

Reactor core structural components are designed to be below these thresholds of exposure and/or stress to avoid IASCC. In addition, crevices have been eliminated from the top guide design in order to prevent the synergistic interaction with IASCC.

In areas where the $5x10^{20}$ neutron/cm^2 threshold of irradiation is not practically avoided, the stress level is maintained below the stress threshold. High purity grades of materials are used in control rods to extend their life. Also, Hydrogen Water Chemistry (HWC) introduced in the plant design to control IGSCC may also be beneficial in avoiding IASCC.

5.2.3.2.3 Compatibility of Construction Materials with Reactor Coolant

The construction materials exposed to the reactor coolant consist of the following:

(1) Solution-annealed austenitic stainless steels (both wrought and cast), Types 304, 304L, 316LN, 316L and XM-19.

(2) Nickel-based alloy (including 600 and X-750) and alloy steel.

(3) Carbon steel and low alloy steel.

(4) Some 400-series martensitic stainless steel (all tempered at a minimum of 593°C).

(5) Colmonoy and Stellite hardfacing material (or equivalent).

(6) Precipitation hardening stainless steels, 17-4PH and XM-13 in the H1100 condition.

All of these construction materials are resistant to stress corrosion in the BWR coolant. General corrosion on all materials, except carbon and low alloy steel, is negligible. Conservative corrosion allowances are provided for all exposed surfaces of carbon and low alloy steels.

The requirements of GDC 4 relative to compatability of components with environmental conditions are met by compliance with the applicable provisions of the ASME Code and by compliance with the recommendations of Regulatory Guide 1.44.

Contaminants in the reactor coolant are controlled to very low limits. These controls are implemented by limiting contaminant levels of elements (such as halogens, S, Pb) to as low as possible in miscellaneous materials used during fabrication and installation. These materials (such as tapes, penetrants) are usually completely removed and cleanliness is assured. Lubricants and gaskets are not miscellaneous material. No detrimental effects will occur on any of the materials from allowable contaminant levels in the high purity reactor coolant. Expected radiolytic products in the BWR coolant have no adverse effects on the construction materials.

5.2.3.2.4 Compatibility of Construction Materials with External Insulation

All non-metallic insulation applied to austenitic stainless steel meets Regulatory Guide 1.36.

5.2.3.3 Fabrication and Processing of Ferritic Materials

5.2.3.3.1 Fracture Toughness

Compliance with Code requirements shall be in accordance with the following:

(1) The ferritic materials used for piping, pumps, and valves of the reactor coolant pressure boundary are usually 63.5 mm or less in thickness. Impact testing is performed in accordance with ASME Code Section III, Paragraph NB-2332 for thicknesses of 63.5 mm or less. Impact testing is performed in accordance with NB-2331 for thicknesses greater than 63.5 mm.

(2) Materials for bolting with nominal diameters exceeding 25.4 mm are required to meet both the 0.64 mm lateral expansion specified in NB-2333 and the 6.2 kg-m Charpy V value. The 60.8 N·m requirement of the ASME Code applies to bolts over 100 mm in diameter, starting Summer 1973 Addenda. Prior to this, the Code referred to only two sizes of bolts (≤ 25.4 mm and > 25.4 mm). GEH continued the two-size categories and added the 60.8 N·m as a more conservative requirement.

(3) The reactor vessel complies with the requirements of NB-2331. The reference temperature (RT_{NDT}) is established for all required pressure-retaining materials used in the construction of Class 1 vessels. This includes plates, forgings, weld material, and heat-affected zone. The RT_{NDT} differs from the nil-ductility temperature (NDT) in that, in addition to passing the drop test, three Charpy V-Notch specimens (transverse) must exhibit 6.9 kg-m absorbed energy and 0.89 mm lateral expansion at 33°C above the RT_{NDT}. The core beltline material must meet 102.0 N·m absorbed upper shelf energy (USE).

(4) Calibration of instrument and equipment shall meet the requirements of ASME Code Section III, Paragraph NB-2360.

5.2.3.3.2 Control of Welding

5.2.3.3.2.1 Regulatory Guide 1.50: Control of Preheat Temperature Employed for Welding of Low-Alloy Steel

Regulatory Guide 1.50 delineates preheat temperature control requirements and welding procedure qualifications supplementing those in ASME Sections III and IX.

The use of low-alloy steel is restricted to the reactor pressure vessel. Other ferritic components in the reactor coolant pressure boundary are fabricated from carbon steel materials.

Preheat temperatures employed for welding of low alloy steel meet or exceed the recommendations of ASME Code Section III, Subsection NB. Components are either held for an extended time at preheat temperature to assure removal of hydrogen, or preheat is

maintained until post-weld heat treatment. The minimum preheat and maximum interpass temperatures are specified and monitored.

All welds were nondestructively examined by radiographic methods. In addition, a supplemental ultrasonic examination was performed.

5.2.3.3.2.2 Regulatory Guide 1.34: Control of Electroslag Weld Properties

For electroslag welding applied to structural joints, the welding process variable specified in the procedure qualification shall be monitored during the welding process.

5.2.3.3.2.3 Regulatory Guide 1.71: Welder Qualification for Areas of Limited Accessibility

Welder qualification for areas of limited accessibility is discussed in Subsection 5.2.3.4.2.3.

5.2.3.3.3 Nondestructive Examination of Tubular Products

Wrought tubular products are supplied in accordance with applicable ASTM/ASME material specifications. Additionally, the specification for the tubular products used for CRD housings specified ultrasonic examination to Paragraph NB-2550 of ASME Code Section III.

These RCPB components meet 10CFR50 Appendix B requirements and the ASME Code requirements, thus assuring adequate control of quality for the products.

5.2.3.3.4 Moisture Control for Low Hydrogen, Covered Arc Welding Electrodes

Suitable identification, storage, and handling of electrodes, flux, and other welding material will be maintained. Precautions shall be taken to minimize absorption of moisture by electrodes and flux.

5.2.3.4 Fabrication and Processing of Austenitic Stainless Steels

5.2.3.4.1 Avoidance of Stress/Corrosion Cracking

5.2.3.4.1.1 Avoidance of Significant Sensitization

When austenitic stainless steels are heated in the temperature range 427°–982°C, they are considered to become “sensitized” or susceptible to intergranular corrosion. The ABWR design complies with Regulatory Guide 1.44 and with the guidelines of NUREG-0313 (Revision 2), to avoid significant sensitization.

For applications where stainless steel surfaces are exposed to water at temperatures above 93°C, low carbon (<0.03%) grade materials are used. For critical applications, nuclear grade (NG) materials (carbon content ≤0.02%) are used. All materials are supplied in the solution heat treated condition. Special sensitization tests are applied to assure that the material is in the annealed condition.

During fabrication, any heating operations (except welding) above 427°C are avoided, unless followed by solution heat treatment. During welding, heat input is controlled. The interpass temperature is also controlled. Where practical, shop welds are solution heat treated. In general, weld filler material used for austenitic stainless steel base metals is Type 308L/316L/309L with an average of 8% (or 8 FN) ferrite content.

5.2.3.4.1.2 Process Controls to Minimize Exposure to Contaminants

Process controls are exercised during all stages of component manufacturing and construction to minimize contaminants. Cleanliness controls are applied prior to any elevated temperature treatment.

Exposure to contaminants capable of causing stress/corrosion cracking of austenitic stainless steel components is avoided by carefully controlling all cleaning and processing materials which contact the stainless steel during manufacture, construction, and installation.

Special care is exercised to insure removal of surface contaminants prior to any heating operations. Water quality for cleaning, rinsing, flushing, and testing is controlled and monitored. Suitable protective packaging is provided for components to maintain cleanliness during shipping and storage.

The degree of surface cleanliness obtained by these procedures meets the requirements of Regulatory Guides 1.37 and 1.44.

5.2.3.4.1.3 Cold-Worked Austenitic Stainless Steels

Cold work controls are applied for components made of austenitic stainless steel. During fabrication, cold work is controlled by applying limits in hardness, bend radii and surface finish on ground surfaces.

5.2.3.4.2 Control of Welding

5.2.3.4.2.1 Avoidance of Hot Cracking

Regulatory Guide 1.31 describes the acceptable method of implementing requirements with regard to the control of welding when fabricating and joining austenitic stainless steel components and systems.

Written welding procedures which are approved by GEH are required for all primary pressure boundary welds. These procedures comply with the requirements of Sections III and IX of the ASME Boiler and Pressure Vessel (B&PV) Code and applicable NRC Regulatory Guides.

All austenitic stainless steel weld filler materials were required by specification to have a minimum delta ferrite content of 5 FN (ferrite number), and a maximum of 20 FN, determined on undiluted weld pads by magnetic measuring instruments calibrated in accordance with AWS Specification A4.2.

Delta ferrite measurements are not made on qualification welds. Both the ASME B&PV Code and Regulatory Guide 1.31 specify that ferrite measurements be performed on undiluted weld filler material pads when magnetic instruments are used. There are no requirements for ferrite measurement on qualification welds.

5.2.3.4.2.2 Regulatory Guide 1.34: Electroslag Welds

See Subsection 5.2.3.3.2.2.

5.2.3.4.2.3 Regulatory Guide 1.71: Welder Qualification or Areas of Limited Accessibility

Regulatory Guide 1.71 requires that weld fabrication and repair for wrought low-alloy and high-alloy steels or other materials such as static and centrifugal castings and bimetallic joints should comply with fabrication requirements of Sections III and IX of the ASME B&PV Code. It also requires additional performance qualifications for welding in areas of limited access.

All ASME Section III welds are fabricated in accordance with the requirements of Sections III and IX of the ASME B&PV Code. There are few restrictive welds involved in the fabrication of BWR components. Welder qualification for welds with the most restrictive access is accomplished by mockup welding. Mockup is examined by sectioning and radiography (or UT).

Acceptance Criterion II.3.b.(3) of SRP Section 5.2.3 is based on Regulatory Guide 1.71. The ABWR design meets the intent of this regulatory guide by utilizing the following alternate approach.

When access to a non-volumetrically examined ASME Section III production weld (1) is less than 305 mm in any direction and (2) allows welding from one access direction only, such weld and repairs to welds in wrought and cast low alloy steels, austenitic stainless steels and high nickel alloys (and in any combination of these materials) shall comply with the fabrication requirements specified in ASME B&PV Code Section III and with the requirements of Section IX invoked by Section III, supplemented by the following requirements:

(1) The welder performance qualification test assembly required by ASME Code Section IX shall be welded under simulated access conditions. An acceptable test assembly will provide both a Section IX welder performance qualification required by this Regulatory Guide.

If the test assembly weld is to be judged by bend tests, a test specimen shall be removed from the location least favorable for the welder. If this test specimen cannot be removed from a location prescribed by Section IX, an additional bend test specimen will be required. If the test assembly weld is to be judged by radiography or UT, the length of the weld to be examined shall include the location least favorable for the welder.

Records of the results obtained in welder accessibility qualification shall be (1) as certified by the manufacturer or installer, (2) maintained and (3) made accessible to authorized personnel.

Socket welds with a 50.8 mm nominal pipe size and under are excluded from the above requirements.

(2) (a) For accessibility, when more restricted access conditions will obscure the welder's line of sight to the extent that production welding will require the use of visual aids such as mirrors, the qualification test assembly shall be welded under the more restricted access conditions using the visual aid required for production welding.

(b) GEH complies with ASME Code Section IX.

(3) Surveillance of accessibility qualification requirements will be performed along with normal surveillance of ASME Code Section IX performance qualification requirements.

5.2.3.4.3 Regulatory Guide 1.66: Nondestructive Examination of Tubular Products

For discussion of compliance with Regulatory Guide 1.66, see Subsection 5.2.3.3.3.

5.2.4 Preservice and Inservice Inspection and Testing of Reactor Coolant Pressure Boundary

This subsection describes the preservice and inservice inspection and system pressure test programs for NRC Quality Group A, ASME B&PV Code, Class 1, items.* It describes those programs implementing the requirements of Subsection IWB of the ASME B&PV (ASME Code) Code Section III and ASME B&PV Code Section XI.

The design to perform preservice inspection is based on the requirements of ASME Code Section XI. The development of the preservice and inservice inspection program plans will be the responsibility of the COL applicant and will be based on ASME Code Section XI, Edition and Addenda specified in accordance with 10CFR50, Section 50.55a. For design certification, GEH is responsible for designing the reactor pressure vessel for accessibility to perform preservice and inservice inspection. Responsibility for designing other components for preservice and inservice inspection is the responsibility of the COL applicant. The COL applicant will be responsible for specifying the Edition of ASME Code Section XI to be used, based on the procurement date of the component per 10CFR50, Section 50.55a. The ASME Code requirements discussed in this section are provided for information and are based on the edition of ASME Code Section XI specified in Table 1.8-21.

* Items as used in this subsection are products constructed under a Certificate of Authorization (NCA-3120) and material (NCA-1220). See Section III, NCA-1000, footnote 2.

See Subsection 5.2.6.2 for COL license information.

5.2.4.1 Class 1 System Boundary

5.2.4.1.1 Definition

The Class 1 system boundary for both preservice and inservice inspection programs and the system pressure test program includes all those items within the Class 1 and Quality Group A boundary on the piping and instrumentation drawings (P&IDs). Based on 10 CFR (1-1-90 Edition) and Regulatory Guide 1.26, that boundary includes the following:

(1) Reactor pressure vessel

(2) Portions of the Main Steam System

(3) Portions of the Feedwater System

(4) Portions of the Standby Liquid Control System

(5) Portions of Reactor Water Cleanup System

(6) Portions of the Residual Heat Removal System

(7) Portions of the Reactor Core Isolation Cooling System

(8) Portions of the High Pressure Core Flooder System

Those portions of the above systems within the Class 1 boundary are those items which are part of the Reactor Coolant System (RCS) up to and including any and all of the following:

(1) The outermost containment isolation valve in the system piping which penetrates primary reactor containment.

(2) The second of two valves normally closed during normal reactor operation in system piping which does not penetrate primary reactor containment.

(3) The Reactor Coolant System SRVs,

(4) The main steam and feedwater system, up to and including the outermost containment isolation valve.

5.2.4.1.2 Exclusions

Portions of systems within the reactor coolant pressure boundary (RCPB), as defined in Subsection 5.2.4.1.1, that are excluded from the Class 1 boundary in accordance with 10CFR50, Section 50.55a, are as follows:

(1) Those components where, in the event of postulated failure of the component during normal reactor operation, the reactor can be shut down and cooled down in an orderly manner, assuming makeup is provided by the Reactor Coolant Makeup System (RCMS) only.

(2) Components which are or can be isolated from the RCS by two valves (both closed, both open, or one closed and one open). Each such open valve is capable of automatic actuation, and if the other valve is open, its closure time is such that, in the event of postulated failure of the component during normal reactor operation, each valve remains operable and the reactor can be shut down and cooled down in an orderly manner, assuming makeup is provided by the RCMS only.

The description of portions of systems excluded from the RCPB does not address Class 1 components exempt from inservice examinations under ASME Code Section XI rules. The Class 1 components exempt from inservice examinations are described in ASME Code Section XI, Subsection IWB–1220.

5.2.4.2 Accessibility

All items within the Class 1 boundary are designed to provide access for the examinations required by ASME Section XI, Subsection IWB–2500. Items such as nozzle-to-vessel welds often have inherent access restrictions when vessel internals are installed; therefore, preservice examination shall be performed on these items prior to installation of internals which would interfere with examination.

5.2.4.2.1 Reactor Pressure Vessel Access

Access for examinations of the reactor pressure vessel (RPV) is incorporated into the design of the vessel, biological shield wall and vessel insulation as follows:

(1) RPV Welds Below the Top Biological Shield Wall

The shield wall and vessel insulation behind the shield wall are spaced away from the RPV outside surface to provide access for remotely operated ultrasonic examination devices as described in Subsection 5.2.4.3.2.1. Access for the insertion of automated devices is provided through removable insulation panels at the top of the shield wall and at access ports at reactor vessel nozzles. Platforms are attached to the bioshield wall to provide access for installation of remotely operated nozzle examination devices.

(2) RPV Welds Above Top of the Biological Shield Wall

Access to the RPV welds above the top of the biological shield wall is provided by removable insulation panels. This design provides reasonable access for both automated as well as manual ultrasonic examination.

(3) Closure Head, RPV Studs, Nuts and Washers

The closure head is dry stored during refueling. Removable insulation is designed to provide access for manual ultrasonic examinations of closure head welds. RPV nuts and washers are dry stored and are accessible for surface and visual (VT-1) examination. RPV studs may be volumetrically examined in place or when removed.

(4) Bottom Head Welds

Access to the bottom head to shell weld and bottom head seam welds is provided through openings in the RPV support pedestal and removable insulation panels around the cylindrical lower portion of the vessel. This design provides access for manual or automated ultrasonic examination equipment. Sufficient access is provided to partial penetration nozzle welds (i.e., CRD penetrations, instrumentation nozzles and recirculation internal pump penetration welds) for performance of the visual VT-2, examination during the system leakage, and system hydrostatic examinations.

(5) Reactor Vessel Support Skirt

The weld between the integrally forged vessel support attachment on the lower shell ring and the RPV support skirt will be examined ultrasonically. Sufficient access is provided for either manual or automated ultrasonic examination. Access is provided to the balance of the support skirt for performance of visual, VT-3, examination.

5.2.4.2.2 Piping, Pumps, Valves and Supports

Physical arrangement of piping pumps and valves provides personnel access to each weld location for performance of ultrasonic and surface (magnetic particle or liquid penetrant) examinations and sufficient access to supports for performance of visual, VT-3, examination. Working platforms are provided in some areas to facilitate servicing of pumps and valves. Platforms and ladders are provided for access to piping welds including the pipe-to-reactor vessel nozzle welds. Removable thermal insulation is provided on welds and components which require frequent access for examination or are located in high radiation areas. Welds are located to permit ultrasonic examination from at least one side, but where component geometries permit, access from both sides is provided.

Restrictions: For piping systems and portions of piping systems subject to volumetric and surface examination, the following piping designs are not used:

(1) Valve to valve

(2) Valve to reducer

(3) Valve to tee

(4) Elbow to elbow

(5) Elbow to tee

(6) Nozzle to elbow

(7) Reducer to elbow

(8) Tee to tee

(9) Pump to valve

Straight sections of pipe and spool pieces shall be added between fittings. The minimum length of the spool piece has been determined by using the formula L = 2T + 152 mm, where L equals the length of the spool piece (not including weld preparation) and T equals the pipe wall thickness.

5.2.4.3 Examination Categories and Methods

5.2.4.3.1 Examination Categories

The examination category of each item is listed in Table 5.2-8, which is provided as an example for the preparation of the preservice and inservice inspection program plans. The items are listed by system and line number, where applicable. Table 5.2-8 also states the method of examination for each item. The preservice and inservice examination plans will be supplemented with detailed drawings showing the examination areas (Figures 5.2-7a and 5.2-7b).

For the preservice examination, all of the items selected for inservice examination shall be performed once in accordance with ASME Code Section XI, Subsection IWB-2200, with the exception of the examinations specifically excluded by ASME Code Section XI from preservice requirements, such as VT-3 examination of valve body and pump casing internal surfaces (B-L-2 and B-M-2 examination categories, respectively) and the visual VT-2 examinations for categories B-E and B-P.

Supplemental examinations recommended in GEH Service Information Letters (SIL) and Rapid Communication Service Information Letters (RICSIL) for previous BWR designs are not

applicable to the ABWR. The ABWR design has either eliminated the components addressed by the SIL or RICSIL (e.g., jet pumps), or has eliminated the need for the examination by eliminating creviced designs and using materials resistant to the known degradation mechanisms, such as intergranular stress corrosion cracking, upon which the SIL and RICSIL examinations were based.

5.2.4.3.2 Examination Methods

5.2.4.3.2.1 Ultrasonic Examination of the Reactor Vessel

Ultrasonic examination for the RPV will be conducted in accordance with ASME Code Section XI. The design to perform preservice inspection on the reactor vessel shall be based on the requirements of ASME Code Section XI. For the required preservice examinations, the reactor vessel shall meet the acceptance standards of Section XI, Subsection IWB-3510. The RPV shell welds are designed for 100% accessibility for both preservice and inservice inspection. The RPV nozzle-to-shell welds will be 100% accessible for preservice inspection, but might have limited areas that will not be accessible from the outer surface for inservice examination techniques. However, the inservice inspection program for the reactor vessel is the responsibility of the COL applicant and any inservice inspection program relief request will be reviewed by the NRC staff based on the Code Edition and Addenda in effect and inservice inspection techniques available at the time of COL application.

The GEH Reactor Vessel Inspection System (GERIS) meets the detection and sizing requirements of Regulatory Guide 1.150, as cited in Table 5.2-9. Inner radius examinations are performed from the outside of the nozzle using several compound angle transducer wedges to obtain complete coverage of the required examination volume. Electronic gating used in the GERIS records up to eight different reflectors simultaneously to assure that all relevant indications are recorded. Appendix 5A demonstrates compliance with Regulatory Guide 1.150.

5.2.4.3.2.2 Visual Examination

Visual examination methods VT-1, VT-2 and VT-3 shall be conducted in accordance with ASME Section XI, Subsection TWA-2210. In addition, VT-2 examinations shall meet the requirements of IWA-5240.

Direct visual (VT-1) examinations shall be conducted with sufficient lighting to resolve a 0.8 mm black line on an 18% neutral grey card. Where such examinations are conducted without the use of mirrors or with other viewing aids, clearance (of at least 610 mm of clear space) is provided where feasible for the head and shoulders of a man within a working arm's length (508 mm) of the surface to be examined.

At locations where leakages are normally expected and leakage collection systems are located (e.g., valve stems and pump seals), the visual (VT-2) examination shall verify that the leakage collection system is operative.

Piping runs shall be clearly identified and laid out such that insulation damage, leaks and structural distress will be evident to a trained visual examiner.

5.2.4.3.2.3 Surface Examination

Magnetic particle and liquid penetrant examination techniques shall be performed in accordance with ASME Section XI, Subsections IWA-2221 and IWA-2222, respectively. Direct examination access for magnetic particle (MT) and penetrant (PT) examination is the same as that required for direct visual (VT-1) examination (Subsection 5.2.4.3.2.1), except that additional access shall be provided as necessary to enable physical contact with the item in order to perform the examination. Remote MT and PT generally are not appropriate as a standard examination process; however, boroscopes and mirrors can be used at close range to improve the angle of vision. As a minimum, insulation removal shall expose the area of each weld plus at least 152 mm from the toe of the weld on each side. Insulation will generally be removed 406 mm on each side of the weld.

5.2.4.3.2.4 Volumetric Ultrasonic Examination

Volumetric ultrasonic examination shall be performed in accordance with ASME Section XI, Subsection IWA-2232. In order to perform the examination, visual access to place the head and shoulders within 508 mm of the area of interest shall be provided where feasible. Twenty three centimeters between adjacent pipes is sufficient spacing if there is free access on each side of the pipes. The transducer dimension has been considered: a 38 mm diameter cylinder, 76 mm long placed with access at a right angle to the surface to be examined. The ultrasonic examination instrument has been considered as a rectangular box, 305 x 305 x 508 mm, located within 12m from the transducer. Space for a second examiner to monitor the instrument shall be provided, if necessary.

Insulation removal for inspection is to allow sufficient room for the ultrasonic transducer to scan the examination area. A distance of 2T plus 152 mm, where T is pipe thickness, is the minimum required on each side of the examination area. The insulation design generally leaves 406 mm on each side of the weld, which exceeds minimum requirements.

5.2.4.3.2.5 Alternative Examination Techniques

As provided by ASME Section XI, Subsection IWA-2240, alternative examination methods, a combination of methods, or newly developed techniques may be substituted for the methods specified for a given item in this section, provided that they are demonstrated to be equivalent or superior to the specified method. This provision allows for the use of newly developed examination methods, techniques, etc., which may result in improvements in examination reliability and reductions in personnel exposure.

5.2.4.3.3 Data Recording

Manual data recording will be performed where manual ultrasonic examinations are performed. Electronic data recording and comparison analyses are to be employed with automated ultrasonic examination equipment. Signals form each ultrasonic transducer will be fed into a data acquisition system in which the key parameters of any reflectors will be recorded. The data to be recorded for manual and automated methods are:

(1) Location

(2) Position

(3) Depth below the scanning surface

(4) Length of the reflector

(5) Transducer data, including angle and frequency

(6) Calibration data

The data so recorded shall be compared with the results of subsequent examinations to determine the behavior of the reflector.

5.2.4.3.4 Qualification of Personnel and Examination Systems for Ultrasonic Examination

Personnel performing examinations shall be qualified in accordance with ASME Section XI, Appendix VII. Ultrasonic examination systems shall be qualified in accordance with industry accepted program for implementation of ASME Section XI, Appendix VIII.

5.2.4.4 Inspection Intervals

The inservice inspection intervals for the ABWR will conform to Inspection Program B as described in Section XI, Subsection IWB-2412. Except where deferral is permitted by Table IWB-2500-1, the percentages of examinations completed within each period of the interval shall correspond to Table IWB-2412-1. An example of the selection of items and examinations to be conducted within the 10-year intervals are described in Table 5.2-8.

Supplemental examinations recommended in GEH SIL and RICSILs for previous BWR designs are not applicable to the ABWR. The ABWR design has either eliminated the components addressed by the SIL or RICSIL (e.g., jet pumps) or has eliminated the need for the materials resistant to the known degradation mechanisms, such as intergranular stress corrosion cracking, upon which the SIL and RICSIL examinations were based.

5.2.4.5 Evaluation of Examination Results

Examination results will be evaluated in accordance with ASME Section XI, Subsection IWB-3000, with repairs based on the requirements of Subsections IWA-4000 and IWB-4000. Re-

examination shall be conducted in accordance with the requirements of IWA-2200. The recorded results shall meet the acceptance standards specified in IWB-3400-1.

5.2.4.6 System Leakage and Hydrostatic Pressure Tests

5.2.4.6.1 System Leakage Tests

As required by Section XI, IWB-2500 for Category B-P, a system leakage test shall be performed in accordance with IWB-5221 on all Class 1 components and piping within the pressure retaining boundary following each refueling outage. For the purposes of the system leakage test, the pressure retaining boundary is as defined in Table IWB-2500-1, Category B-P, Note 1. The system leakage test shall include a VT-2 examination in accordance with IWA-5240. The system leakage test will be conducted approximately at the maximum operating pressure and temperature indicated in the applicable process flow diagram for the system as indicated in Table 1.7-1. The system hydrostatic test (Subsection 5.2.4.6.2) is acceptable in lieu of the system leakage test.

5.2.4.6.2 Hydrostatic Pressure Tests

As required by Section IX, IWB-2500 for Category B-P, the hydrostatic pressure test shall be performed in accordance with ASME Section IWB-5222 on all Class 1 components and piping within the pressure retaining boundary once during each 10-year inspection interval. For purposes of the hydrostatic pressure test, the pressure retaining boundary is defined in Table IWB-2500-1, Category B-P, Note 1. The system hydrostatic test shall include a VT-2 examination in accordance with IWA-5240. For the purposes of determining the test pressure for the system hydrostatic test in accordance with IWB-5222 (a), the nominal operating pressure shall be the maximum operating pressure indicated in the P&ID for the Nuclear Boiler System (Figure 5.1-3).

5.2.4.7 Code Exemptions

As provided in ASME Section XI, IWB-1220, certain portions of Class 1 systems are exempt from the volumetric and surface examination requirements of IWB-2500. These portions of systems are specifically identified in Table 5.2-8.

5.2.5 Reactor Coolant Pressure Boundary and Core Cooling Systems Leakage Detection

5.2.5.1 Leakage Detection Methods

RCPB leakage detection is a primary function of the Leak Detection and Isolation System (LDS). The LDS (Figure 5.2-8) consists of temperature, pressure, radiation and flow sensors with associated instrumentation, power supplies and logic used to detect, indicate, and alarm leakage from the reactor primary pressure boundary and, in certain cases (Subsections 7.3.1.1.2, 7.6.1.3 and 7.7.1.7), to initiate closure of isolation valves to shut off leakage external

to the containment. The system is designed to be in conformance with Regulatory Guide 1.45 (for leak detection functions) and IEEE-279 (for isolation function).

Abnormal leakage from the following systems within the primary containment (drywell) and within selected areas of the plant outside the drywell (both inside and outside the reactor building) is detected, indicated, alarmed, and, in certain cases, isolated:

(1) Main steamlines

(2) Reactor Core Isolation Cooling (RCIC) System

(3) High Pressure Core Flooder (HPCF)

(4) Residual Heat Removal (RHR) System

(5) Reactor Water Cleanup (CUW) System

(6) Feedwater System

(7) Coolant systems within the drywell

(8) Reactor pressure vessel

(9) Miscellaneous systems

Leak detection methods (in accordance with Regulatory Guide 1.45) differ for the plant areas inside the drywell as compared to those areas outside the drywell. These areas are considered separately as follows.

5.2.5.1.1 Detection of Leakage Within Drywell

The primary detection method for small unidentified leaks within the drywell includes (1) drywell floor drain sump pump activity and sump level increases, (2) drywell cooler condensate flow rate increases, and (3) airborne gaseous and particulate radioactivity increases. The sensitivity of these primary detection methods for unidentified leakage within the drywell is 3.785 liters/min within one hour. These variables are continuously indicated and/or recorded in the control room. If the unidentified leakage increases to 19 liters/min, the detection instrumentation channel will trip and activate an alarm in the control room to alert the operator.

The secondary detection methods, pressure and temperature of the drywell atmosphere are used to detect gross unidentified leakage. High drywell pressure will alarm and trip the isolation logic, which will result in closure of the containment isolation valves. High drywell temperature is recorded and alarmed only.

The detection of small identified leakage within the drywell is accomplished by monitoring drywell equipment drain sump pump activity and sump level increases. The equipment drain

sump level monitoring instruments will activate an alarm in the control room when the identified leak rate reaches 95 liters/min.

Equipment drain sump pump activity and sump level increases will be caused primarily from leaks from large process valves through valve stem drain lines.

The determination of the source of other identified leakage within the drywell is accomplished by (1) monitoring the reactor vessel head seal drain line pressure, (2) monitoring temperature in the valve stem seals drain line to the equipment drain sump, and (3) monitoring temperature in the SRV discharge lines to the suppression pool to detect leakage through each of the SRVs. All of these monitors continuously indicate and/or record in the control room and will trip and activate an alarm in the control room on detection of leakage from monitored components.

Excessive leakage inside the drywell (e.g., process line break or loss-of-coolant accident) is detected by high drywell pressure, low reactor water level, or high steamline flow (for breaks downstream of the flow elements). The instrumentation channels for these variables will trip when the monitored variable exceeds predetermined limits to activate an alarm and trip the isolation logic, which will close appropriate isolation valves.

The alarms, indication and isolation trip functions performed by the foregoing leak detection methods are summarized in Tables 5.2-6 and 5.2-7.

Listed below are the variables monitored for detection of leakage from piping and equipment located within the drywell:

(1) High drywell temperature

(2) High temperature in the valve stem seal (packing) drain lines

(3) High flow rate from the drywell floor and equipment drain sumps

(4) High steamline flow rate (for leaks downstream of flow elements in main steamline and RCIC steamline)

(5) High drywell pressure

(6) High fission product releases

(7) Reactor vessel low water level

(8) Reactor vessel head seal drain line high pressure

(9) SRV discharge piping high temperature.

5.2.5.1.2 Detection of Leakage External to Drywell

The areas outside the primary containment (drywell) that are monitored for primary coolant leakage are (1) the equipment areas in the Reactor Building (R/B), (2) the main steam tunnel, and (3) the main steamline tunnel area in the Turbine Building (T/B). The process piping, for each system to be monitored for leakage, is located in compartments or rooms separated from other systems, so that leakage may be detected by area temperature monitors.

The areas are monitored by thermocouples that sense high ambient temperature in each area. The temperature elements are located or shielded so that they are sensitive to air temperature only and not radiated heat from hot piping or equipment. Increases in ambient temperature will indicate leakage of reactor coolant into the area. These monitors have sensitivities suitable for detection of reactor coolant leakage into the monitored areas of 95 liters/min or less. The temperature trip setpoint will be a function of the room size and the type of ventilation provided. These monitors provide alarm and indication in the control room and will trip the isolation logic to close the appropriate isolation valves (e.g., the main steam tunnel area temperature monitors will close the MSIV, MSL drain isolation valves, and the CUW isolation valves.

Ambient differential temperature monitoring is provided in equipment areas of the reactor building and the R/B MSL tunnel area to monitor for small leaks. The leakage is monitored and alarmed in the control room.

Leakage detection will be provided in the turbine building. The T/B monitors will also alarm and indicate in the control room and trip the isolation logic to close the MSIVs and MSL drain isolation valves when leakage exceeds 95 liters/min.

Large leaks external to the drywell (e.g., process line breaks outside of the drywell) are detected by low reactor water level, high process line flow, high ambient temperatures in the MSL tunnel to the turbine or equipment areas, floor or equipment drain sump activity, high differential flow (CUW only), low steamline pressures or low main condenser vacuum. These monitors provide alarm and indication in the control room and will trip the isolation logic to cause closure of appropriate system isolation valves.

Intersystem leakage detection is accomplished by monitoring radiation of the Reactor Building Cooling Water (RCW) System coolant return lines from the reactor internal pumps (RIPs), Residual Heat Removal (RHR) System, and Reactor Water Cleanup (CUW) System and fuel pool cooling heat exchangers. This monitoring is provided by the Process Radiation Monitoring System. Potential intersystem leakage from the RCPB to RCIC, RHR or HPCF is discussed in response to Question 430.2c.

Listed below are the variables monitored for detection of leakage from piping and equipment located external to the primary containment (drywell):

(1) Within the reactor building:

(a) Main steamline and RCIC steamline high flow.

(b) Reactor vessel low water level.

(c) High flow rate from reactor building sumps outside drywell.

(d) High ambient temperature or high differential in equipment areas of RCIC, RHR, and the hot portions of the CUW.

(e) RCIC turbine exhaust line high diaphragm pressure.

(f) High differential mass flow rate in CUW piping.

(g) High radiation in the RHR, CUW, and RIP, and FPC reactor building cooling water heat exchanger discharge lines (intersystem leakage).

(h) RCIC steamline low pressure.

(2) Within steam tunnel (between primary containment and turbine building):

(a) High radiation in main steamlines (steam tunnel).

(b) Main steam tunnel high ambient air temperature or high differential temperature.

(3) Within turbine building (outside secondary containment):

(a) Main steamline low pressure.

(b) Low main condenser vacuum.

(c) Turbine building ambient temperature in areas traversed by main steamlines.

5.2.5.2 Leak Detection Instrumentation and Monitoring

5.2.5.2.1 Leak Detection Instrumentation and Monitoring Inside the Drywell

(1) Drywell Floor Drain Sump Monitoring

The drywell floor drain sump collects unidentified leakage such as leakage from control rod drives, floor drains, valve flanges, closed cooling water for reactor services (e.g., RIP motor cooling), condensate from the drywell atmosphere coolers, and any leakage not connected to the drywell equipment drain sump. The sump is equipped with two pumps and special instrumentation to measure sump fillup and pumpout times and provide continuous sump level rate of change monitoring with control room indication and alarm capabilities for excessive fill rate or pumpout

frequency of the pumps. The drain sump instrumentation has a sensitivity of detecting reactor coolant leakage of 3.785 liters/min within a 60-minute period. The alarm setpoint has an adjustable range up to 19 liters/min for the drywell floor drain sump.

(2) Drywell Equipment Drain Sump Monitoring

The drywell equipment drain sump collects only identified leakage from identified leakage sources. This sump monitors leakage from valve stem packings, RPV head flange seal, and other known leakage sources which are piped directly into the drywell equipment drain sump. The number of sump pumps and the types of drain sump instrumentation is the same as that used for the drywell floor drain sump. The monitoring channels measure sump level rate of change and sump fillup and pumpout times, with main control room indication and alarm capabilities. Collection in excess of background leakage would indicate an increase in reactor coolant leakage from an identifiable source.

(3) Drywell Air Cooler Condensate Flow Monitoring

The condensate flow rates from the drywell atmosphere coolers are monitored for high drain flows, which indicate leaks from piping or equipment within the drywell.

This flow is monitored by one channel of flow instrumentation located to measure flow in the common condensate cooler drain line, which drains the condensate from all of the drywell coolers to the drywell floor drain sump. The transmitter and its associated comparator provide main control room flow readout and trip and alarm on high flow conditions approaching the unidentified discharge rate limit. Location of the common header is such that at least a 25% safety margin is available for flow transmitter pressure head requirements.

(4) Drywell Temperature Monitoring

The ambient temperature within the drywell is monitored by four single element thermocouples located equally spaced in the vertical direction within the drywell. An abnormal increase in drywell temperature could indicate a leak within the drywell.

Ambient temperatures within the drywell are recorded and alarmed in the main control room. Air temperature monitoring sensors are located such that they are sensitive to reactor coolant leakage and not to radiated heating from pipes and equipment.

(5) Drywell Fission Product Monitoring

Primary coolant leaks within the drywell are detected by radiation monitoring of continuous drywell atmosphere samples. The fission product radiation monitors

provide gross counting of radiation from radioactive particulates, and radioactive gases. The count levels are recorded in the control room and alarmed on abnormally high activity level.

(6) Drywell Pressure Monitoring

Drywell pressure is monitored by pressure transmitters which sense drywell pressure relative to R/B (secondary containment) pressure. Four channels of drywell monitoring are provided by the Nuclear Boiler System (NBS). A pressure rise above the normally indicated values will indicate a possible leak or loss of reactor coolant within the drywell. Pressure exceeding preset values will be alarmed in the main control room and required safety action will be automatically initiated.

(7) Reactor Vessel Head Flange Seal Monitoring

A single channel of pressure monitoring is provided for measurement and control room indication of pressure between the inner and outer reactor head flange seals. High pressure will indicate a leak in the inner O-ring seal. This high pressure is annunciated in the main control room (no isolation). A pressure tap for this measurement is provided by the NBS. Leakage through both inner and outer seals will be detected by other drywell leak detection instrumentation. Any leakage through the inner seal can be directed to the drywell equipment drain sump.

(8) Reactor Recirculation Pump Motor Leakage Monitoring

Excess leakage from the RIP motor casing will be detected by the drywell floor drain sump monitors described in (1) above.

(9) Safety/Relief Valve Leakage Monitoring

SRV leakage is detected by temperature sensors located on each relief valve discharge line such as to detect any valve outlet port flow. Each of the temperature channels includes control room recording and alarm capabilities. The temperature sensors are mounted using thermowells in the discharge piping about half of a meter from the valve body to prevent false indication. The monitoring of this leakage is provided by the NBS.

(10) Valve Stem Packing Leakage Monitoring

Large (two inch or larger) remote power-operated valves located in the drywell for the Nuclear Boiler, Reactor Water Cleanup, Reactor Core Isolation Cooling, and Residual Heat Removal Systems are fitted with drain lines from the valve stems, from between the two sets of valve steam packing. Leakage through the inner packing is carried to the drywell equipment drain sump. Leakage during hydro-testing may be observed in drain line sight glasses installed in each drain line. Also,

each drainline is equipped with temperature sensors for detecting leakage. A remote-operated solenoid valve on each line may be closed to shut off the leakage flow through the first seal in order to take advantage of the second seal, and may be used during plant operation, in conjunction with the sump instrumentation, to identify the specific process valve which is leaking.

(11) Main Steamline High Flow Monitoring (for leaks downstream of flow elements)

High flow in each main steamline is monitored by four differential pressure transmitters that sense the pressure difference across a flow restrictor in the RPV main steam outlet nozzle. The pressure taps are part of the Nuclear Boiler System. Two sets of taps are provided, each set includes a nozzle tap and a vessel tap. High flow rate in the main steamlines during plant operation could indicate a MSL break. High flow exceeding the preset value in any of the four main steamlines will result in trip of the MSIV isolation logic to close all the MSIVs and the MSL drain valves, and annunciate the high flow in the main control room. Each monitoring channel includes inputs to the process computer.

(12) Reactor Vessel Low Water Level Monitoring

The Nuclear Boiler System provides reactor water level monitoring for the LDS functions and for safety functions of other systems. Sixteen channels of monitoring (four in each division to provide trip signals at four different water levels, i.e., Levels 3, 2, 1.5 and 1) are provided for the LDS functions (e.g., RHR, CUW, MSL and isolations of other portions of the plant). The safety-related performance requirements of the level monitoring channels are a function of the NBS. For additional information on reactor vessel water level instrumentation see Subsection 7.7.1.1.

The impact of noncondensable gases on the accuracy of reactor vessel water level measurements shall be considered in the design of water level instrument piping. The COL applicant will design the water level instrumentation flow control system to provide flow rates determined by the results of the BWR Owners' Group testing, as required in Subsection 5.2.6.3.

(13) RCIC Steamline Flow Monitoring (for leaks downstream of flow elements)

The steam supply line for motive power for operation of the RCIC turbine is monitored for abnormal flow. Four channels of flow measurement are provided for detection of steamline breaks downstream of the flow elements by LDS flow transmitters which sense differential pressure across elbow taps in the RCIC turbine supply steamline. High steam flow exceeding preset values will result in the closure of the RCIC steamline isolation valves, warmup bypass valve, and trip the turbine isolation valve. Isolation trip signals from one division will close the outboard

isolation valves, while trip signals from a second division will close the inboard RCIC steamline isolation valve and warmup bypass valve. Any isolation signal to the RCIC logic will also trip the RCIC turbine. LDS measurements are taken as close to the reactor vessel as possible to maximize LDS coverage.

5.2.5.2.2 Leak Detection Instrumentation and Monitoring External to Drywell

(1) Visual and Audible Inspection

Accessible areas are inspected periodically and the temperature, pressure, sump level and flow indicators discussed below are monitored regularly. Any instrument indication of abnormal leakage will be investigated.

(2) Reactor Building Floor and Equipment Drain Sump Monitoring

Reactor building equipment drain sumps collect the identified leakage from known sources from within enclosed equipment areas. Leakage from unknown or unidentified sources (e.g., RHR Shutdown Cooling System piping, CUW System piping, process instrumentation piping or CRD HCU unit piping) is collected in several R/B floor drain sumps. The number of pumps and the instrumentation used for monitoring both the R/B floor and equipment and equipment drain sumps, are similar to those used for monitoring the drywell floor drain sump as described in Subsections 5.2.5.2.1(1) and 5.2.5.2.1(2). The R/B and equipment drain sump monitoring channels measure sump levels and sump fillup and pumpout times and initiate alarms when setpoints are exceeded.

(3) Reactor Water Cleanup System Differential Flow Monitoring

The suction and discharge flows of the Reactor Water Cleanup (CUW) System are monitored for flow differences between that coming from the reactor and that returning to the reactor or to the main condenser. Temperature compensated flow differences greater than preset values cause alarm and isolation. Bypass time delay interlocks are provided for delaying the isolation signals and prevent isolation initiation during normal CUW surge conditions. Flow in the CUW suction line from the reactor and in the CUW return lines to the reactor and in the blowdown line to the radwaste system is monitored by 12 differential flow transmitters (four for each line). CUW flow measurements are taken as close to the reactor vessel as possible to maximize the degree of coverage of the LDS channels. The outputs of the flow transmitters in the suction line are compared with the outputs from the discharge lines, and alarms in the control room and isolation signals are initiated when higher flow out of the reactor vessel indicates that leaks equal to the established leak rate limits for alarm or isolation may exist. Net flow indication readout is provided in the control room.

(4) Main Steamline Area Temperature Monitors

High temperature in the main steamline tunnel area is detected by thermocouples. Four thermocouples are used for measuring main steam tunnel ambient temperatures and are located in the area of the main steamlines tunnel area. All temperature elements are located or shielded so as to be sensitive to air temperatures and not to the radiated heat from hot equipment. High ambient temperatures will alarm in the control room and provide signals to close the main steamline and MSL drain line isolation valves, and the CUW isolation valves. High ambient temperature in the steam tunnel area can also indicate leakage from the reactor feedwater piping or equipment within the tunnel. Isolation of the feedwater lines, if necessary, may be accomplished by manual closure by the operator of valves located in the feedwater lines in the steam tunnel. Monitoring of the main steamline area outside the steam tunnel and before the inlet to the turbine is provided with sufficient ambient temperature sensors to cover the full length of the steamlines in the turbine building.

The channel signals are combined so as to provide the four divisional trip signals used as inputs to the LDS isolation logic for closure of the MSIVs and MSL drain lines. High ambient T/B temperatures (main steamline areas) will also be indicated in the control room. The T/B temperature elements are located so as not to be sensitive to radiated heat from hot equipment.

(5) Temperature Monitors in Equipment Areas

Dual element thermocouples are installed in the RCIC, RHR and CUW equipment rooms for sensing high ambient temperature in these areas. These elements are located or shielded so that they are sensitive to air temperature only and not to radiated heat from hot equipment. Four ambient temperature channels are provided in each equipment area. Each of the four channels drive voting logic in two divisions (three divisions for RHR), which provides an alarm signal and a trip signal for that division's isolation logic to close the respective system isolation valves.

(6) Main Steamline Radiation Monitoring

Main steamline radiation is monitored by gamma sensitive radiation monitors of the Process Radiation Monitoring System (PRMS). The PRMS provide four divisional channel trip signals to the LDS to close all MSIVs and the MSL drain valves upon detection of high radiation in the main steamline tunnel area. A reactor trip (scram) is also initiated by the same PRMS channel trip signals. The PRMS trip signals are also used to shutdown the main condenser mechanical vacuum pump and isolate its discharge line. The detectors are geometrically arranged to detect significant increases in radiation level with any number of main steamlines in operation. Control room indications and alarms are provided by the PRM System.

(7) RCIC Steamline Pressure Monitors

Pressure in the RCIC steamline is monitored by LDS instruments to provide RCIC turbine shutoff and closure of the RCIC isolation valves on low steamline pressure as a protection for the RCIC turbine. This steamline pressure is monitored by four pressure transmitters, each connected to one tap of the two elbows used for RCIC steam flow measurement, and upstream of the RCIC steamline isolation valves (Subsection 5.2.5.2.1(13)). Low pressure is alarmed in the control room and low pressure isolation signals close the same RCIC valves as those closed by the RCIC steam flow monitoring instruments.

(8) RCIC Turbine Exhaust Line Diaphragm Pressure Monitors

Pressure between the rupture disk diaphragms in the RCIC System turbine exhaust vent line is monitored by four channels of pressure instrumentation. The instrumentation channel equipment and piping are provided by the RCIC System as an interface to the LDS. The two logic channels of Division I trip on high pressure to close the inboard RCIC isolation valves, and the channels of Division II trip to close the outboard isolation valves. Either divisional logic channel will also trip the turbine.

(9) Main Steamline Low Pressure Monitoring

Main steamline low pressure is monitored by four pressure transmitters (one in each line) that sense the pressure downstream of the outboard MSIVs. The sensing points are located as close as possible to the turbine stop valves. Low steamline pressure at the points monitored can be an indication of an excessive steamline leak or a malfunction of the Reactor Pressure Control System. The transmitters are provided by the Nuclear Boiler System. The LDS will automatically initiate closure of all MSIVs and the MSL drain valves if pressure at the turbine end of the main steamlines decreases below a preselected value when the reactor mode switch is in the “RUN” position.

(10) Main Condenser Low Vacuum Monitoring

Low main condenser vacuum could indicate that primary reactor coolant is being lost through the main condenser. Four channels of main condenser pressure monitoring are provided by the Nuclear Boiler System. The LDS utilizes the low vacuum signals to trip the MSIV logic on low condenser vacuum and close all MSIVs and the MSL drain valves. The condenser vacuum trip signals can be bypassed by a manual keylocked bypass switch in the control room during startup and shutdown operations.

(11) Intersystem Leakage Monitoring

Radiation monitors are used to detect reactor coolant leakage into the Reactor Building Cooling Water (RCW) System, which supplies coolant water to the (1) RHR heat exchangers, (2) the reactor internal pumps (RIPs) heat exchangers, (3) the CUW non-regenerative heat exchangers, and (4) the fuel pool cooling heat exchangers. One process sensing channel is provided in each of the three RCW loops to monitor for radiation due to coolant leakage into the RSW. Each channel will alarm on high radiation conditions, indicating process leakage into the RCW System. The PRMS provides the monitoring of this variable. No isolation trip functions are performed by these monitors. Potential intersystem leakage from the RCPB to RCIC, RHR or HPCF System is discussed in response to Question 430.2c.

(12) Large Leaks External to the Drywell

The main steamline high flow monitoring, the reactor vessel low water level monitoring and the RCIC steamline flow monitoring (Subsection 5.2.5.2.1, Paragraphs 11, 12 and 13) can also indicate large leaks from the reactor coolant piping external to the drywell.

5.2.5.2.3 Summary

Tables 5.2-6 and 5.2-7 summarize the actions taken by each leakage detection function. Table 5.2-6 shows that those systems which detect gross leakage initiate immediate automatic isolation action to terminate the gross leakage or minimize loss of reactor coolant. The systems which are capable of detecting small leaks initiate an alarm in the control room as shown in Table 5.2-7. In addition, Table 5.2-6 shows that two or more leakage detection methods are provided for each system or area that is a potential source of leakage. Plant operating procedures will dictate the action an operator is to take upon receipt of an alarm from any of these systems. The operator can manually isolate the violated system or take other appropriate action.

A time delay is provided for CUW differential flow isolation signals to prevent system isolation during CUW surges.

The LDS is a four-divisional channel which is redundantly designed so that failure of any single element within a channel will not interfere with a required detection of leakage or a required isolation. In the four-division LDS, where inadvertent isolation could impair plant performance (e.g., closure of the MSIVs), any single channel or divisional component malfunction will not cause a false indication of leakage and will not cause a false isolation trip. Only one of the four channels will trip and two or more channels are required to trip in order to cause closure of the main steamline isolation valves. The LDS thus combines a very high probability of operating when needed with a very low probability of operating falsely. The system is testable during plant operation.

5.2.5.3 Indication in the Control Room

Leak detection methods are discussed in Subsection 5.2.5.1. Details of some of the LDS alarms, recordings and other indications in the control room are discussed in Subsections 5.2.5.1.1, 5.2.5.1.2, 5.2.5.2.1 and 5.2.5.2.2. Further details of the LDS control room indications are included in Subsection 7.3.1.1.2.

5.2.5.4 Limits for Reactor Coolant Leakage

5.2.5.4.1 Total Leakage Rate

The total reactor coolant leakage rate consists of all leakage (identified and unidentified) that flows to the drywell floor drain and equipment drain sumps. The total leakage rate limit is well within the makeup capability of the RCIC System (182 m^3/h). The total reactor coolant leakage rate limit is established at 95 liters/min. The identified and unidentified leakage rate limits are established at 95 liters/min and 3.785 liters/min, respectively.

The total leakage rate limit is established low enough to prevent overflow of the sumps. The equipment drain sumps and the floor drain sumps, which collect all leakage, are each pumped out by two 10 m^3/h pumps.

If either the total or unidentified leak rate limit is exceeded, an orderly shutdown shall be initiated and the reactor shall be placed in a cold shutdown condition within 24 hours.

5.2.5.4.2 Identified Leakage Inside Drywell

The valve stem packing of large power-operated valves, the reactor vessel head flange seal and other seals in systems that are part of the reactor coolant pressure boundary, and from which normal design identified source leakage is expected, are provided with leakoff drains. The nuclear system valves inside the drywell and the reactor vessel head flange are equipped with double seals. The leakage from the inner valve stem packings and from the reactor vessel head flange inner seal, which discharge to the drywell equipment drain sump, are measured during plant operation. Leakage from the main steam SRVs, discharging to the suppression pool, is monitored by temperature sensors mounted in thermowells in the individual SRV exhaust lines. The thermowells are located several feet from the valve bodies so as to prevent false indication. These temperature sensors transmit signals to the control room for monitoring. Any temperature increase detected by these sensors, that is above the ambient temperatures, indicates SRV leakage.

5.2.5.5 Unidentified Leakage Inside the Drywell

5.2.5.5.1 Unidentified Leakage Rate

The unidentified leakage rate is the portion of the total leakage rate received in the drywell sumps that is not identified as previously described. A threat of significant compromise to the nuclear system process barrier exists if the barrier contains a crack that is large enough to

propagate rapidly (critical crack length). The unidentified leakage rate limit must be low because of the possibility that most of the unidentified leakage rate might be emitted from a single crack in the nuclear system process barrier.

An allowance for leakage that does not compromise barrier integrity and is not identifiable is established for normal plant operation.

The unidentified leakage rate limit is established at 3.785 liters/min to allow time for corrective action before the process barrier could be significantly compromised. This unidentified leakage rate is a small fraction of the calculated flow from a critical crack in a primary system pipe (Appendix 3E).

5.2.5.5.2 Margins of Safety

The margins of safety for a detectable flaw to reach critical size are presented in Subsection 5.2.5.5.3. Figure 3E-22 shows general relationships between crack length, leak rate, stress, and line size using mathematical models.

5.2.5.5.3 Criteria to Evaluate the Adequacy and Margin of Leak Detection System

For process lines that are normally open, there are at least two different methods of detecting abnormal leakage from each system comprising the nuclear system process barrier, located both inside the primary containment (drywell) and external to the drywell, in the reactor building the steam tunnel and the turbine building (Tables 5.2-6 and 5.2-7). The instrumentation is designed so it can be set to provide alarms at established leakage rate limits and isolate the affected system if necessary. The alarm points are determined analytically or based on measurements of appropriate parameters made during startup and preoperational tests.

The unidentified leakage rate limit is based, with an adequate margin for contingencies, on the crack size large enough to propagate rapidly.

The established limit is sufficiently low so that, even if the entire unidentified leakage rate were coming from a single crack in the nuclear system process barrier, corrective action could be taken before the integrity of the barrier would be threatened.

The Leak Detection and Isolation System (LDS) will satisfactorily detect unidentified leakage of 3.785 liters/min within one hour in the drywell.

5.2.5.6 Differentiation Between Identified and Unidentified Leaks

Subsection 5.2.5.1 describes the leak detection methods utilized by the LDS. The ability of the LDS to differentiate between identified and unidentified leakage is discussed in Subsections 5.2.5.4 and 5.2.5.5.

5.2.5.7 Sensitivity and Operability Tests

Sensitivity, including sensitivity tests and response time of the LDS, and the criteria for shutdown if leakage limits are exceeded are covered in Subsections 5.2.5.1.1, 5.2.5.1.2, 5.2.5.2.1(1) and 7.3.1.1.2.

Testability of the LDS is contained in Subsection 7.3.1.1.2(10).

5.2.5.8 Testing and Calibration

Provisions for testing and calibration of the LDS are covered in Chapter 14.

5.2.5.9 Regulatory Guide 1.45: Compliance

This regulatory guide is prescribed to assure that leakage detection and collection systems provide maximum practical identification of leaks from the RCPB.

Leakage is separated into identified and unidentified categories and each is independently monitored, thus meeting Position C.1 requirements.

Leakage from unidentified sources from inside the drywell is collected into the floor drain sump and monitored with an accuracy better than 3.785 liters/min within one hour thus meeting Position C.2 requirements.

By monitoring (1) floor drain sump fillup and pumpout rate, (2) airborne particulates, and (3) air coolers condensate flow rate, Position C.3 is satisfied.

Monitoring of the R/B cooling water heat exchanger coolant return lines for radiation due to leaks within the RHR, RIP, CUW and the Fuel Pool Cooling System heat exchangers satisfies Position C.4 (see Subsection 7.6.1.2 for details).

The floor drain sump monitoring, air particulates monitoring, and air cooler condensate monitoring are designed to detect leakage rates of 3.785 liters/min within one hour, thus meeting Position C.5 requirements.

The fission products monitoring subsystem is qualified for SSE. The containment floor drain sump monitor, air cooler, and condensate flow meter are qualified for SSE, thus meeting Position C.6 requirements.

Leak detection indicators and alarms are provided in the main control room, thus satisfying Position C.7 requirements. Procedures and graphs will be provided by the COL applicant to plant operators for converting the various indicators to a common leakage equivalent, when necessary, thus satisfying the remainder of Position C.7 (see Subsection 5.2.6.1 for COL

license information). The LDS is equipped with provisions to permit testing for operability and calibration during the plant operation using the following methods:

(1) Simulation of trip signal.

(2) Comparing channel to channel of the same leak detection method (i.e., area temperature monitoring).

(3) Operability checked by comparing one method versus another (i.e., sump fillup rate versus pumpout rate and particulate monitoring or air cooler condensate flow versus sump fillup rate).

(4) Continuous monitoring of floor drain sump level, and a source of water for calibration and testing is provided.

These satisfy Position C.8 requirements.

Limiting unidentified leakage to 3.785 liters/min and identified leakage to 95 liters/min satisfies Position C.9.

5.2.6 COL License Information

5.2.6.1 Conversion of Indications

Procedures and graphs will be provided by the COL applicant to operations for converting the various indicators into a common leakage equivalent (Subsection 5.2.5.9).

5.2.6.2 Plant-Specific ISI/PSI

COL applicants will submit the complete plant-specific ISI/PSI program. Each applicant will submit or address the following:

(1) The PSI program should include reference to the edition and addenda of ASME Code Section XI that will be used for selecting of components for examinations, lists of the components subject to examination, a description of the components exempt from examination by the applicable code, and isometric drawings used for the examination.

(2) Submit plans for preservice examination of the reactor pressure vessel welds to address the degree of compliance with Regulation Guide 1.150.

(3) Discuss the near-surface examination and resolution with regard to detecting service-induced flaws and the use of electronic gating as related to the volume of material near the surface that is not being examined. Discuss how the internal surfaces (e.g., inner radius of a pipe section and reactor vessel internals) will be examined.

(4) Submit an acceptable resolution of the information requested regarding the ISI/PSI program.

(5) Submit all relief requests, if needed, with a supporting technical justification.

5.2.6.3 Reactor Vessel Water Level Instrumentation

The COL applicant will design the reactor vessel water level instrumentation flow control system to provide flow rates determined by the results of the BWR Owners group testing. (See Subsection 5.2.5.2.1(12)).

5.2.7 References

5.2-1 D.A. Hale, "The Effect of BWR Startup Environments on Crack Growth in Structural Alloys", Trans. of ASME, Vol. 108, January 1986.

5.2-2 F.P. Ford and M. J. Povich, "The Effect of Oxygen/Temperature Combinations on the Stress Corrosion Susceptibility of Sensitized T-304 Stainless Steel in High Purity Water", Paper 94 presented at Corrosion 79, Atlanta, GA, March 1979.

5.2-3 "BWR Normal Water Chemistry Guidelines: 1986 Revision", EPRI NP-4946-SR, July 1988.

5.2-4 B.M. Gordon, "The Effect of Chloride and Oxygen on the Stress Corrosion Cracking of Stainless Steels: Review of Literature", Material Performance, NACE, Vol. 19, No. 4, April 1980.

5.2-5 W.J. Shack, et al, "Environmentally Assisted Cracking in Light Water Reactors: Annual Report, October 1983 - September 1984", NUREG/CR-4287, ANL-85-33, June 1985.

5.2-6 D.A. Hale, et al, "BWR Coolant Impurities Program", EPRI, Palo Alto, CA, Final Report on RP2293-2.

5.2-7 K.S. Brown and G.M. Gordon, "Effects of BWR Coolant Chemistry on the Propensity of IGSCC Initiation and Growth in Creviced Reactor Internals Components", paper presented at the Third International Symposium of Environmental Degradation of Materials in Nuclear Power Systems, ANS-NACE-TMS/AIME, Traverse City, MI, September 1987.

5.2-8 B.M. Gordon et al, "EAC Resistance of BWR Materials in HWC", Predeeding of the Second International Symposium of Environmental Degradation of Materials in Nuclear Power Systems, ANS, LaGrange Park, IL 1986.

5.2-9 BWR Hydrogen Water Chemistry Guidelines: 1987 Revision EPRI NP-4947-SR, December 1988.

5.2-10 Guideline for Permanent BWR Hydrogen Water Chemistry Installations: 1987 Revision, EPRI NP-5203-SR-A.

5.2-11 B.M. Gordon, “Corrosion and Corrosion Control in BWRs”, NEDE-30637, December 1984.

5.2-12 B.M. Gordon et al, “Hydrogen Water Chemistry for BWRs- Materials Behavior”, EPRI NP-5080, Palo Alto, CA, March 1987.

Table 5.2-1 Reactor Coolant Pressure Boundary Components Applicable Code Cases

Number	Title	Applicable Equipment	Remarks
[N-71-15	*(1)*	*Component Support]**	Accepted per RG 1.85
[N-122	*(2)*	*Piping]**	Accepted per RG 1.84
[N-247	*(3)*	*Component Support]**	Accepted per RG 1.84
[N-249-9	*(4)*	*Component Support]**	Conditionally Accepted per RG 1.85
[N-309-1	*(5)*	*Component Support]**	Accepted per RG 1.84
[N-313	*(6)*	*Piping]**	Accepted per RG 1.84
[N-316	*(7)*	*Piping]**	Accepted per RG 1.84
[N-318-3	*(8)*	*Piping]**	Conditionally Accepted per RG 1.84
[N-319	*(9)*	*Piping]**	Accepted per RG 1.84
[N-391	*(10)*	*Piping]**	Accepted per RG 1.84
[N-392	*(11)*	*Piping]**	Accepted per RG 1.84
[N-393	*(12)*	*Piping]**	Accepted per RG 1.84
[N-411-1	*(13)*	*Piping]**	Conditionally Accepted per RG 1.84
[N-414	*(14)*	*Component Support]**	Accepted per RG 1.84
[N-430	*(15)*	*Component Support]**	Accepted per RG 1.84
N-236-1	(16)	Containment	Conditionally Accepted Per RG 1.147
N-307-1	(17)	RPV Studs	Accepted per RG 1.147
N-416	(20)	Piping	Accepted Per RG 1.147
N-432	(21)	Class 1 Components	Accepted Per RG 1.147
N-435-1	(22)	Class 2 Vessels	Accepted Per RG 1.147
N-457	(23)	Bolt and Studs	Accepted Per RG 1.147
N-463	(24)	Piping	Accepted Per RG 1.147
N-460	(25)	Class 1 & 2 Components and Piping	Accepted Per RG 1.147
N-472	(26)	Pumps	Accepted Per RG 1.147
[*N-476*	*(26a)*	*Component Support*]*	
N-479	(27)	Main Steam System	Not Listed in RG 1.147
N-491	(28)	Component Supports	Not Listed in RG 1.147
N-496	(29)	Bolts and Studs	Not listed in RG 1.147

Table 5.2-1a Reactor Coolant Pressure Boundary Components Applicable Code Cases

[(1)	*Additional Materials for Subsection NF, Classes 1, 2, 3 and MC Component Supports Fabricated by Welding, Section III, Division 1.]**
[(2)	*Stress Indices for Structure Attachments, Class 1, Section III, Division 1.]**
[(3)	*Certified Design Report Summary for Components Standard Supports, Section III, Division 1, Classes 1, 2, 3 and MC.]**
[(4)	*Additional Material for Subsection NF, Classes 1, 2, 3 and MC Component Supports Fabricated Without Welding, Section III, Division I.]**
[(5)	*Identification of Materials for Component Supports, Section III, Division 1.]**
[(6)	*Alternate Rules for Half-Coupling Branch Connections, Section III, Division 1.]**
[(7)	*Alternate Rules for Fillet Weld Dimensions for Socket Welded Fittings, Section III, Division 1, Classes 1, 2, 3.]**
[(8)	*Procedure for Evaluation of the Design of Rectangular Cross Section Attachments on Class 2 or 3 Piping, Section III, Division 1.]**
[(9)	*Alternate Procedure for Evaluation of Stress in Butt Weld Elbows in Class 1 Piping, Section III, Division 1.]**
[(10)	*Procedure for Evaluation of the Design of Hollow Circular Cross Section Welded Attachments on Class 1 Piping, Section III, Division 1.]**
[(11)	*Procedure for Evaluation of the Design of Hollow Circular Cross Section Welded Attachments on Classes 2 and 3 Piping, Section III, Division 1.]**
[(12)	*Repair Welding Structural Steel Rolled Shapes and Plates for Component Supports, Section III, Division 1.]**
[(13)	*Alternative Damping Values for Seismic Analysis of Classes 1, 2, 3 Piping Sections, Section III, Division 1.]**
[(14)	*Tack Welds for Class 1, 2, 3 and MC Components and Piping Supports.]**
[(15)	*Requirements for Welding Workmanship and Visual Acceptance Criteria for Class 1, 2, 3 and MC Linear-Type and Standard Supports.]**
(16)	Repair and Replacement of Class MC Vessels.
(17)	Revised Examination Volume for Class 1 Bolting, Table IWB-2500-1, Examination Category B-G-1, When the Examinations Are Conducted from the Drilled Hole.
(18)	Not Used
(19)	Not Used
(20)	Alternative Rules for Hydrostatic Testing of Repair or Replacement of Class 2 Piping.
(21)	Repair Welding Using Automatic Or Machine Gas Tungsten-Arc Welding (GTAW) Temperbead Technique.
(22)	Alternative Examination Requirements for Vessels With Wall Thicknesses 2 in. or Less.
(23)	Qualification Specimen Notch Location for Ultrasonic Examination of Bolts and Studs.

Table 5.2-1a Reactor Coolant Pressure Boundary Components Applicable Code Cases (Continued)

(24)	Evaluation Procedures and Acceptance Criteria for Flaws in Class 1 Ferritic Piping That Exceed the Acceptance Standards of IWB-3514-2.
(25)	Alternative Examination Coverage for Class 1 and 2 Welds.
(26)	Use of Digital Readout and Digital Measurement Devices for Performing Pump Vibration Testing.
[*(26a)*	*Class 1, 2, 3, and MC Linear Component Supports—Design Criteria for Single Angle Members Section III, Division I, Subsection NF; SUPP. 1 — NC, May 6, 1989*]*
(27)	Boiling Water Reactor (BWR) Main Steam Hydrostatic Test.
(28)	Alternate Rules for Examination of Class 1, 2, 3 and MC Component Supports of Light-Water-Cooled Power Plants.
(29)	Helical-Coil Threaded Inserts, Section XI, Div. 1.

* See Subsection 3.9.1.7. The change restriction is limited to the edition of Code Cases in application only to the design of piping and piping supports.

Table 5.2-2 Systems Which May Initiate During Overpressure Event

Systems	Initiating/Trip Signal*
Reactor Protection	Reactor shutdown on high flux
RCIC	ON when reactor water level is at L2
	OFF when reactor water level is at L8
Recirculation System	Four pumps OFF when reactor water level is at L3
	Remaining six pumps OFF when reactor water level is at L2
	Four pumps (the same four tripped at L3)
	OFF when reactor pressure is at 7.76 MPaG
CUW	OFF when reactor water level is at L2
HPCF	ON when reactor water level is at L1.5

* Vessel level trip settings (Figure 5.1-3, Tables 2 and 3).

Table 5.2-3 Nuclear System Safety/Relief Valve Setpoints Set Pressures and Capacities

Number of Valves*	Spring Set Pressure (MPaG)	ASME Rated Capacity at 103% Spring Set Pressure (kg/h each)	Relief Pressure Set Pressure (MPaG)
1	7.92	395,000	7.51
1	7.92	395,000	7.58
4	7.99	399,000	7.65
4	8.06	402,000	7.72
4	8.13	406,000	7.79
4	8.20	409,000	7.85

* Eight of the SRVs serve in the automatic depressurization function.

Table 5.2-4 Reactor Coolant Pressure Boundary Materials

Component	Form	Material	Specification (ASTM/ASME)
Main Steam Isolation Valves			
Valve Body	Cast	Carbon steel	SA352 LCB
Cover	Forged	Carbon Steel	SA350LF2
Poppet	Forged	Carbon Steel	SA350LF2
Valve stem	Rod	17-4 pH	SA 564 630 (H1100)
Body bolt	Bolting	Alloy steel	SA 540 B23 CL4 or 5
Hex nuts	Bolting Nuts	Alloy steel	SA 194 GR7
Main Steam Safety/Relief Valve			
Body	Forging or Casting	Carbon steel Carbon steel	ASME SA 350 LF2ASME SA 352 LCB
Bonnet (yoke)	Forging or Casting	Carbon steel Carbon steel	ASME SA 350 LF2 ASME SA 352 LCB
Nozzle (seat)	Forging or Casting	Stainless steel or Carbon steel	ASME SA 182 Gr F316 or SA351 CF3 or CF 3M ASME SA 350 LF2 or SA 352 LCB
Body to bonnet stud	Bar/rod	Low-Alloy steel	ASME SA 193 Gr B7
Body to bonnet nut	Bar/rod	Alloy steel	ASME SA 194 Gr 7
Disk	Forging or Casting	Alloy steel NiCrfe Alloy Stainless steel	ASME SA 637 Gr 718 ASME SA 351 CF 3A
Spring washer &	Forging	Carbon steel	ASME SA 105
Adjusting Screw or		Alloy steel	ASME SA 193 Gr B6 (Quenched + tempered or normalized & tempered)
Setpoint adjustment assembly	Forgings	Carbon and alloy steel parts	Multiple specifications
Spindle (stem)	Bar	Precipitation-hardened steel	ASTM A564 Type 630 (H 1100)
Spring	Wire or Bellville washers	Steel Alloy Steel	ASTM A304 Gr 4161 N 45 Cr Mo V67
Main Steam Piping (between RPV and the turbine stop valve)			
Pipe	Seamless	Carbon steel	ASME SA 333 Gr. 6
Contour nozzle	Forging	Carbon steel	ASME SA 350 LF 2
200A 10.36 MPaG large groove flange	Forging	Carbon steel	ASME SA 350 LF 2

Table 5.2-4 Reactor Coolant Pressure Boundary Materials (Continued)

Component	Form	Material	Specification (ASTM/ASME)
50A special nozzle	Forging	Carbon steel	ASME SA 350 LF2
Elbow	Seamless	Carbon steel	ASME SA 420
Head fitting/penetration piping	Forging	Carbon steel	ASME SA 350 LF2
Feedwater Piping (between RPV and the seismic interface restraint)			
Pipe	Seamless	Carbon steel	ASME SA 333 Gr. 6
Elbow	Seamless	Carbon steel	ASME SA 420
Head fitting/penetration piping	Forging	Carbon steel	ASME SA 350 LF2
Nozzle	Forging	Carbon steel	ASME SA 350 LF2
Recirculation Pump Motor Cover			
Bottom flange (cover)	Forging	Alloy steel	ASME SA 533 Gr. B Class 1 or SA 508 Class 3
Stud	Bolting	Alloy steel	ASME SA 540 CL.3 Gr.B24 or SA 193, B7
Nut	Bolting	Alloy steel	ASME SA 194 Gr. 7
CRD			
Middle flange	Forging	Stainless steel	SA 182, F304L or 316L
Spool piece	Forging	Stainless steel	SA 182, F304L or 316L
Mounting bolts	Bar	Alloy steel	SA 194, B7
Seal housing	Forging	Stainless steel	SA 182, F304L or 316L
Seal housing nut	Bar	Stainless steel	SA 564, 17-4PH (H1100)
Reactor Pressure Vessel			
Shells and Heads	Plate Forging	Mn-1/2 Mo-1/2 Ni 3/4 Ni-1/2 Mo-Cr-V Low alloy steel	SA-533, Type B, Class 1 SA-508, Class 3
Shell and Head Flange	Forging	3/4 Ni-1/2 Mo-Cr-V Low alloy steel	SA-508 Class 3
Flanged Nozzles	Forging	C-Si Low alloy steel	SA-508 Class 3
Drain Nozzles	Forging	C-Si Carbon steel	SA-508 Class 1
Appurtenances/ Instrumentation Nozzles	Forging	Cr-Ni-Mo Stainless steel	SA-182, Grade F316L*or F316† or SA-336, Class F316L* or F316†
	Bar, Smls. Pipe	Ni-Cr-Fe (UNS N06600)	SB-166‡ or SB-167‡

Table 5.2-4 Reactor Coolant Pressure Boundary Materials (Continued)

Component	Form	Material	Specification (ASTM/ASME)
Stub Tubes	Forging	Ni-Cr-Fe (UNS N06600)	SB-564‡
	Bar, Smls. Pipe	Ni-Cr-Fe (UNS N06600)	SB-166‡ or SB-167‡

* Carbon content is maximum 0.020%.

† Carbon content is maximum 0.020% and nitrogen from 0.060 to 0.120%.

‡ Added niobium content is 1 to 4%

Table 5.2-5 BWR Water Chemistry

	Concentrations* Parts Per Billion (ppb)					Conductivity		Electro-Chemical Corrosion Potential
	Iron	Copper	Chloride	Sulfate	Oxygen†	µS/cm at 25°C	pH at 25°C	V at 25°C
Condensate	<20	<2	<4	<4	<10	~0.075		—
Condensate Treatment Effluent and Feedwater	<2.2	<0.1	<0.32	<0.32	20 - 50	<0.059		—
Reactor Water								
(a) Normal Operation	<20	<1	<20	<20	=	<0.3	~7	< -0.23
(b) Shutdown	<20	<1	<20	<20	-	<1.2	~7	—
(c) Hot Standby	<20	<1	<20	<20	<200	<0.3	~7	—
(d) Depressurized	<20	<1	<20	<20	high (may be 1000 to 8000)	<1.2	5.6-8.6	—
Control Rod Drive Cooling Water	<2.2	<0.1	<0.32	<0.32	20 - 50	<0.059		—

* These limits should be met at least 90% of the time.

† Some revision of oxygen values may be established after hydrogen water chemistry has been established

Table 5.2-6 LDS Control and Isolation Function vs. Monitored Process Variables

LDS Control & Isolation Functions \ Monitored Variables	Reactor Water Level Low	Turbine Inlet SL Press Low	Reactor Pressure High	MSL Flow Rate High	MSL Radiation High	MSL Tunnel Amb. Temp High	Turbine Area Amb. Temp High	Main Condenser Vacuum Low	Drywell Pressure High	RHR Equip Area Temp High	RCIC Equip Area Temp High	RCIC SL Pressure Low	RCIC SL Flow Rate High	RCIC Vent Exhaust Press High	CUW Equip Area Temp HIgh	CUW Differential Flow High	SLCS Pumps Running	LCW Drain Line Radiation High	HCW Drain Line Radiation High	R/B HVAC Exhaust Air Rad High	F/H Exhaust Air Rad High
MSIVs & MSL Drain Line Valves	L1.5	X		X	X	X	X	X													
CUW Process Lines Isolation	L2		X*			X									X	X	X				
RHR S/C PCV Valves	L3		X							X											
RCIC Steamline Isolation											X	X	X	X							
ATIP Withdrawal	L3								X												
DW RAD Sampling Isolation	L2								X												
SPCU Process Line Isolation	L3								X												
DW LCW Sump Drain Line Isolation	L3								X									X			
DW HCW Sump Drain Line Isolation	L3								X										X		
RCW PCV Valves Isolation	L1								X												
HNCW PCV Valves Isolation	L1								X												
AC System P&V Valves Isolation	L3								X											X	X
FCS PCV Valves Isolation	L3								X												
R/B HVAC Air Ducts Isolation	L3								X											X	X
SGTS Initiation	L3								X											X	X

* Head spray valve only

Table 5.2-7 Leakage Sources vs. Monitored Trip Alarms

Leakage Source	Location	Monitored Plant Variable: Reactor Vessel Water Level Low	Drywell Pressure High	DW Floor Drain Sump High Flow	DW Equip Drain Sump High Flow	DW Fission Products Radiation High	Drywell Temperature High	SRV Discharge Line Temperature High	Vessel Head Flange Seal Pressure High	RB Eq/Fl Drain Sump High Flow	DW Air Cooler Condensate Flow High	MSL or RCIC Steamline Flow High	MSL Tunnel or TB Ambient Area Temp High	Equip Areas Ambient or Diff Temp High	CUW Differential Flow High	MSL Tunnel Radiation High	Inter-System Leakage (Radiation) High
Main Steamlines	I	X	X	X		X	X	X			X	X					
	O	X								X		X	X	X		X	
RCIC Steamline	I	X	X	X		X	X				X	X					
	O	X								X		X		X			
RCIC Water	I																
	O									X				X			
RHR Water	I	X	X	X		X	X				X						
	O									X				X			Ⓧ
HPCF Water	I	X	X	X		X	X				X						
	O									X				X			
CUW Water	I	X	X	X		X	X				X						
	O	X								X			X	X	X		Ⓧ
Feedwater	I	X	X	X		X	X				X						
	O									X			X				
Recirc Pump Motor Casing	I		X	X		X	X				X						Ⓧ
	O																
Reactor Vessel Head Seal	I				X				X								
	O																
Valve Stem Packing	I				X												
	O									X							
Miscellaneous Leaks	I			X			X										
	O									X							Ⓧ

I = Inside Drywell Leakage

O = Outside Drywell Leakage

Ⓧ= Reactor coolant leakage in cooling water to RHR Hx, RIP Hx, CUW Non-regen Hx's or to FP cooling Hx.

Table 5.2-8 Examination Categories

Quality Group	System Number	System Title	System Description	P&ID Diagram	Sec. XI Exam Cat.	Items Examined	Exam method
A	B11/B21	Reactor Pressure Vessel/ Nuclear Boiler	Reactor Pressure Vessel	Figure 5.1-3			
			Vessel Shell Welds		B-A	Welds	UT (Note 7)
			Vessel Head Welds		B-A	Welds	UT (Note 7)
			Shell-to-Flange Weld		B-A	Weld	UT
			Head-to-Flange Weld		B-A	Weld	UT, MT
			Nozzles for: Main Steam, Feedwater, SD Outlet, CCS (Fldg.) & SD Inlet, SD - CUW SD Outlet, CCS (Spray) & SD Inlet		B-D	Welds, Inner Radius	UT
			CRD Housing to Middle Flange and Niddle Flange to Spool Piece Bolting		B-G-2	Bolts	VT-1
			Nozzles for CRD, RIP & Instrumentation		B-E	External Surfaces	VT-2 (Note 8)
			Closure Head Nuts		B-G-1	Nuts	MT
			Closure Studs		B-G-1	Studs	UT, MT (Note 9)
			Threads in Flange		B-G-1	Threads	UT
			Closure Washers, Bushings		B-G-1		VT-1
			Reactor Pressure Vessel Integral Attachments	Figure 5.1-3	B-H	Welds	UT or MT (Note 10)
			Vessel Interior		B-N-1	Vessel	VT-3 (Note 11)
			Interior Attachment Welds Within Beltline Region		B-N-2	Welds	VT-1 (Note 12)
			Interior Attachment Welds Beyond Beltline Region		B-N-2	Welds	VT-3 (Note 12)

Table 5.2-8 Examination Categories (Continued)

Quality Group	System Number	System Title	System Description	P&ID Diagram	Sec. XI Exam Cat.	Items Examined	Exam method
A	B21	Nuclear Boiler	Main steamlines A,B,C,D from RPV up to and including SRVs F0I0A thru U and outboard MSIVs F009A B, C & D	Figure 5.1-3			
			Lines 700A-NB-023,-25, - 27, -29, Piping		B-J	Welds (Note 1)	UT,MT
			MSIV F009A,B,C,D F008A,B,C,D		B-M-1	Valve Body (Note 2)	UT
			MSIV F009A,B,C,D F008A,B,C,D		B-M-2	Valve Body Internal Surfaces (Note 3)	VT-3
			Safety/Relief Valves F0I0, A through H F0I0, J through N F0I0 P F0I0 R through U		B-M-2	Valve Body Internal Surfaces (Note 3)	VT-3
			All pressure-retaining components and Piping		B-P	External Surfaces (Note 4)	VT-2
			Integral Attachments		B-K-1	Welds	UT or MT (Note 5)
			Piping and component Supports		F-A	Supports (Note 13)	VT-3
			Bolting		B-G-2	Bolts, Nut & Stud (Note 6)	VT-1
			Main steamlines A,B,C,D drain lines from inboard MSIVs F008A,B,C,D inlet up to and including outboard drain valve F012A,B,C,D	Figure 5.1-3			

Table 5.2-8 Examination Categories (Continued)

Quality Group	System Number	System Title	System Description	P&ID Diagram	Sec. XI Exam Cat.	Items Examined	Exam method
A	B21	Nuclear Boiler (Continued)	Piping		B-J	Welds (Note 1)	MT
			Valves		B-M-2	Internal Surfaces (Note 3)	VT-3
			All pressure retaining components and piping		B-P	External Surfaces (Note 4)	VT-2
			Component and piping supports		F-A	Supports (Note 13)	VT-3
			Integral attachments		B-K-1	Welds	UT or MT (Note 5)
			Bolting		B-G-2	Bolts, Nuts & Studs (Note 6)	VT-1
			Head vent line from RPV nozzle up to and including warmup line to main steamline A and valve F019	Figure 5.1-3			
			Piping		B-J	Welds (Note 1)	MT
			Valves		B-M-2	Internal Surfaces (Note 3)	VT-3
			All pressure-retaining components and Piping		B-P	External Surfaces (Note 4)	VT-2
			Component and piping supports		F-A	Supports (Note 13)	VT-3

Table 5.2-8 Examination Categories (Continued)

Quality Group	System Number	System Title	System Description	P&ID Diagram	Sec. XI Exam Cat.	Items Examined	Exam method
A	B21	Nuclear Boiler (Continued)	Integral Attachments		B-K-1	Welds	UT or MT (Note 5)
			Bolting		B-G-2	Bolts, Nuts & Studs (Note 6)	VT-1
			Feedwater lines from RPV up to and including outer isolation valves F003A,B	Figure 5.1-3			
			Piping		B-J	Welds (Note 1)	UT, MT
			Valves		B-M-2	Valve Body Internal Surfaces (Note 3)	VT-3
			All pressure-retaining components		B-P	External Surfaces (Note 4)	VT-2
			Integral Attachments		B-K-1	Welds	UT or MT (Note 5)
			Bolting		B-G-2	Bolts, Nuts & Studs (Note 6)	VT-1
			Piping and Components		F-A	Supports (Note 13)	VT-3
			All Class A piping 25A and smaller (i.e., valve gland leakoff lines)	Figure 5.1-3	Exempted per IWB-1220 (b) (1)		
			All pressure-retaining components and piping		B-P	External Surfaces (Note 4)	VT-2

Table 5.2-8 Examination Categories (Continued)

Quality Group	System Number	System Title	System Description	P&ID Diagram	Sec. XI Exam Cat.	Items Examined	Exam method
A	C41	SLCS	Injection line from HPCF-B injection line connection up to and including outboard isolation valve F007	Figure 9.3-1			
			40A-SLC-4 piping		B-J	Welds (Note 1)	MT
			Valves		B-M-2	Valve Body Internal Surfaces (Note 3)	VT-3
			Pressure-retaining components and piping		B-P	External Surfaces (Note 4)	VT-2
			Integral attachments		B-K-1	Welds	MT or UT (Note 5)
			Piping and component supports		F-A	Supports (Note 13)	VT-3
			Bolting		B-G-2	Bolts, Nuts & Studs (Note 6)	VT-1
A	E11	RHR	LPFL B & C injection lines from RPV nozzles up to and including injection valves F005B and C	Figure 5.5-10			
			200A-RHR-107 piping 250A-RHR-106 piping 200A-RHR-207 piping 200A-RHR-206 piping		B-J	Welds (Note 1)	UT, MT
A	E11	RHR (Continued)	Valves		B-M-2	Valve Body Internal Surfaces (Note 3)	VT-3

Table 5.2-8 Examination Categories (Continued)

Quality Group	System Number	System Title	System Description	P&ID Diagram	Sec. XI Exam Cat.	Items Examined	Exam method
			All pressure-retaining components and piping		B-P	External Surfaces (Note 4)	VT-2
			Integral attachments		B-K-1	Welds	UT or MT (Note 5)
			Piping and component supports		F-A	Supports (Note 13)	VT-3
			Bolting		B-G-2	Bolts, Nuts & Studs (Note 6)	VT-1
			Shutdown cooling suction lines from RPV nozzles up to and including outboard isolation valves F011A,B,C	Figure 5.4-10			
			350A-RHR-010 piping 350A-RHR-211 piping 350A-RHR-110 piping		B-J	Welds (Note 1)	UT, MT
			Valves		B-M-2	Internal Surfaces (Note 3)	VT-3
			All pressure-retaining components & piping		B-P	External Surfaces (Note 4)	VT-2
			Bolting		B-G-2	Bolts, Nuts & Studs (Note 6)	VT-1
A	E11	RHR (Continued)	Integral Attachments		B-K-1	Welds	UT or MT (Note 5)
			Piping & component Supports		F-A	Supports (Note 13)	VT-3

Table 5.2-8 Examination Categories (Continued)

Quality Group	System Number	System Title	System Description	P&ID Diagram	Sec. XI Exam Cat.	Items Examined	Exam method
			All Class A piping 20A, and 25A in diameter, i.e.: - valve gland leakoff lines - test connections - drain lines - equalizing lines	Figure 5.4-10	Exempted per IWB-1220 (2) (1)		
			All pressure-retaining components and piping		B-P	External Surfaces (Note 4)	VT-2
A	E22	HPCF	HPCF injection lines from RPV nozzles up to and including injection valves F003B,C	Figure 6.3-7			
			200A-HPCF-008 Piping		B-J	Welds (Note 1)	UT, MT
			Valves		B-M-2	Valve Body Internal Surfaces (Note 3)	VT-3
			All pressure-retaining components and piping		B-P	External Surfaces (Note 4)	VT-2
			Integral attachments		B-K-1	Welds	UT or MT (Note 5)
			Components and piping supports		F-A	Supports (Note 13)	VT-3
A	E22	HPCF (Continued)	Bolting		B-G-2	Bolts, Nuts & Studs (Note 6)	VT-1

Table 5.2-8 Examination Categories (Continued)

Quality Group	System Number	System Title	System Description	P&ID Diagram	Sec. XI Exam Cat.	Items Examined	Exam method
			All Class A piping 20A in diameter. i.e: - test connections - valve gland leakoff lines - equalizing lines	Figure 6.3-7	Exempted per IWB-1220(b)(1)		
			All pressure-retaining components and piping		B-P	External Surfaces (Note 4)	VT-2
A	E51	RCIC	RCIC steam supply line from main steamline B up to and including outboard isolation valve F036	Figure 5.4-8			
			150A-RCIC-033		B-J	Welds (Note 1)	UT, MT
			Valves F035, F036		B-L-2	Valve Body Internal Surfaces (Note 3)	VT-3
			All pressure-retaining component and piping		B-P	External Surfaces (Note 4)	VT-2
			Integral attachments		B-K-1	Welds	UT or MT (Note 5)
			Piping and component supports		F-A	Supports (Note 13)	VT-3
			Bolting		B-G-2	Bolts, Nuts & Studs (Note 6)	VT-1

Table 5.2-8 Examination Categories (Continued)

Quality Group	System Number	System Title	System Description	P&ID Diagram	Sec. XI Exam Cat.	Items Examined	Exam method
A	E51	RCIC (Continued)	All Class A piping 20A, 25A in diameter i.e: - valve gland leakoff lines - test connections - drain lines - warmup line	Figures 5.4-8	Exempted per IWB-1220 (b) (1)		
			All pressure-retaining components and piping		B-P	External Surfaces (Note 4)	VT-2
A	G31	CUW	Vessel head spray line from head vent nozzle up to and including outboard isolation valve F017	Figure 5.4-12			
			150A-CUW-24-CS		B-J	Welds (Note 1)	UT & MT
			Valves		B-M-2	Valve Body Internal Surfaces (Note 3)	VT-3
			All pressure-retaining components and piping		B-P	External Surfaces (Note 4)	VT-2
			Integral attachments		B-K-1	Welds	UT or MT (Note 5)
			Piping and component supports		F-A	Supports (Note 13)	VT-3
			Bolting		B-G-2	Bolts, Studs & Nut (Note 6)	VT-1

Table 5.2-8 Examination Categories (Continued)

Quality Group	System Number	System Title	System Description	P&ID Diagram	Sec. XI Exam Cat.	Items Examined	Exam method
A	G31	CUW (Continued)	RPV bottom head drain line from RPV nozzle up to and including valve F001 and outboard isolation valve F003	Figure 5.4-12			
			Branch Connection 65A-CUW-20-55 to 200A-CUW-1-CS		B-F	Weld	UT & PT
			200A-CUW-1-CS piping		B-J	Welds (Note 1)	UT & MT
			65A-CUW-20-SS piping		B-J	Welds (Note 1)	PT
			Valves		B-M-2	Valve Body Internal Surfaces (Note 3)	VT-3
			All pressure-retaining components and piping		B-P	External Surfaces (Note 4)	
			Integral attachments		B-K-1	Welds	UT or MT (Note 5)
			Piping and component supports		F-A	Supports (Note 13)	VT-3
			Bolting		B-G-2	Bolts, Stud & Nut (Note 6)	VT-1
			Suction line from RHR B shutdown cooling suction line up to valve F001 up to RPV bottom head blowdown header to CUW	Figure 5.4-12 Figure 5.4-10			
			200A-CUM-1-CS piping		B-J	Welds (Note 1)	UT & MT

Table 5.2-8 Examination Categories (Continued)

Quality Group	System Number	System Title	System Description	P&ID Diagram	Sec. XI Exam Cat.	Items Examined	Exam method
A	G31	RUCU (Continued)	Valves		B-M-2	Valve Body Internal Surfaces (Note 3)	VT-3
			All pressure-retaining components and piping		B-P	External Surfaces (Note 4)	VT-2
			Integral attachments		B-K-1	Welds	UT or MT (Note 5)
			Piping and component supports		F-A	Supports (Note 13)	VT-3
			Bolting		B-G-2	Bolts, Studs & Nuts (Note 6)	VT-1
			All Class A piping 20A in diameter. i.e: - test connections - valve gland leakoff lines - drain lines - sample lines - instrument lines	Figure 5.4-12	Exempted per IWB-1220(b)(1)		
			All pressure-retaining components and piping		B-P	External Surfaces (Note 4)	VT-2

Table 5.2-8
Examination Categories and Methods

NOTES:

(1) Category B-J: At least 25% of the circumferential piping welds (including branch connection welds) shall be selected for inservice inspection in accordance with the rules of Table IWB-2500-1 for examination category B-J. Welds NPS 4 and larger are examined by both ultrasonic (UT) and magnetic particle (MT) methods. Welds in piping less than NPS 4 are examined by the MT method. The examination includes at least a pipe-diameter length, but not more than 305 mm of each longitudinal weld intersecting the circumferential weld.

(2) Category B-M-1: Valve body welds selected for inservice inspection are limited to at least one valve within each group of valves of the same size and type and performing a similar function in accordance with rules of Table IWB-2500-1 for examination category B-M-1.

(3) Category B-M-2: Valve Bodies selected for inservice inspection are limited to at least one valve within each group of valves of the same size and type and performing a similar function in accordance with the rules of Table IWB-2500-1 for examination category B-M-2. Examination is required only when a valve is disassembled for maintenance, repair or volumetric examination.

(4) Category B-P: Visual examination of the external surfaces of pressure retaining components and piping for inservice inspection is performed in conjunction with the system leakage and system hydrostatic tests in accordance with the rules of Table IWB-2500-1 for examination category B-P.

(5) Category B-K-1: Examination of integral attachments for inservice inspection is limited to those attachments which are external, associated with an NF type component support and which have a base material thickness greater than 16 mm. Ultrasonic (UT) examination may be substituted for magnetic particle (MT) examination for some configurations as specified by Table IWB-2500-1 for examination category B-K-1.

(6) Category B-G-2: All bolts, studs and nuts, 5.1 cm and less in diameter, are examined for inservice inspection in accordance with the rules of Table IWB-2500-1 for examination category B-G-2.

(7) Category B-A: All RPV welds are subject to inservice inspection. For RPV head welds, only the accessible length of each weld is required to be examined.

(8) Category B-E: The visual VT-2 examination is performed in conjunction with the system hydrostatic test.

(9) Category B-G-1: Closure studs are examined ultrasonically only when examined in place or by ultrasonic and magnetic particle when removed.

(10) Category B-H: Examination of integral attachments for inservice inspection is limited to those attachments which are external, associated with an NF type component support and which have a base material thickness greater than 16 mm and the attachment weld joins either directly to the surface of the vessel or to an integrally cast or forged attachment to the vessel. For the reactor vessel support skirt, ultrasonic examination from only one side shall be substituted for the surface examination in accordance with Table IWB-2500-1 for examination category B-H.

(11) Examination Category B-N-1: Areas to be examined shall include the spaces above and below the reactor core that are made accessible from examination by removal of components during refueling outages.

(12) Examination Category B-N-2: Only welds made accessible for examination by removal of components during normal refueling outages are required to be examined.

(13) Category F-A: Supports selected for inservice examination, as described in IWF-2510, shall include 25% of Class 1 piping supports. The total percentage sample shall be comprised of supports from each system where the individual sample sizes are proportional to the total number of non-exempt supports of each type and function within each system. All supports of non-exempt components (i.e., vessels, pumps and valves) shall be subject to inservice examination.

General: The preservice examination includes all of the items in all examination categories with the exception of categories B-E, B-P and the internal surface examination of category B-M-2. The preservice examinations shall include essentially 100% of the pressure retaining welds in non-exempt Class 1 piping and components except examination category B-O, which shall be limited to peripheral control rod drive housings only in accordance with IWB-2200. Preservice examination of supports shall be performed following the initiation of hot functional or power ascension tests.

Table 5.2-9 Ultrasonic Examination of RPV: Reg. Guide 1.150 Compliance

Reg. Position Item Number	Requirement	Description of Exam. Compliance
C.1.1	Frequency of Calibration	In accordance with Reg. Guide 1.150, Appendix A, 1.2(a)
C.1.2	Screen Height Linearity	In accordance with Reg. Guide 1.150, Appendix A, 1.2 (d)
C.1.3	Amplitude Control Linearity	In accordance with Reg. Guide 1.150, Appendix A, 1.2 (e)
C.1.4	Frequency-Amplitude Curve	In accordance with Reg. Guide 1.150, Appendix A, 1.2(f)
C.2.1	Calibration Manual Scan	In accordance with Reg.Guide 1.150, Appendix A, 2.1
C.2.2	Calibration Mechanized Scan	In accordance with Reg. Guide 1.150, Appendix A, 2.2 a, 2.2 b and 2.2 c.
C.2.3	Calibration Checks	In accordance with Reg. Guide 1.150, Appendix A, 2.3. Simulator Not Used.
C.3.0	Near Surface Resolution	In accordance with Reg. Guide 1.150, Appendix A, 3.1 a and c
C.4.0	Beam Profile	In accordance with Reg. Guide 1.150, Appendix A, 1.2 (f)
C.5.0	Scanning Weld-Metal Interface	In accordance with Reg. Guide 1.150, Appendix A, 3.2
C.6.0	Sizing	In accordance with Reg. Guide 1.150, Appendix A, 6.0
C.7.0	Reporting of Results	In accordance with Reg. Guide 1.150, Appendix A, 7.0

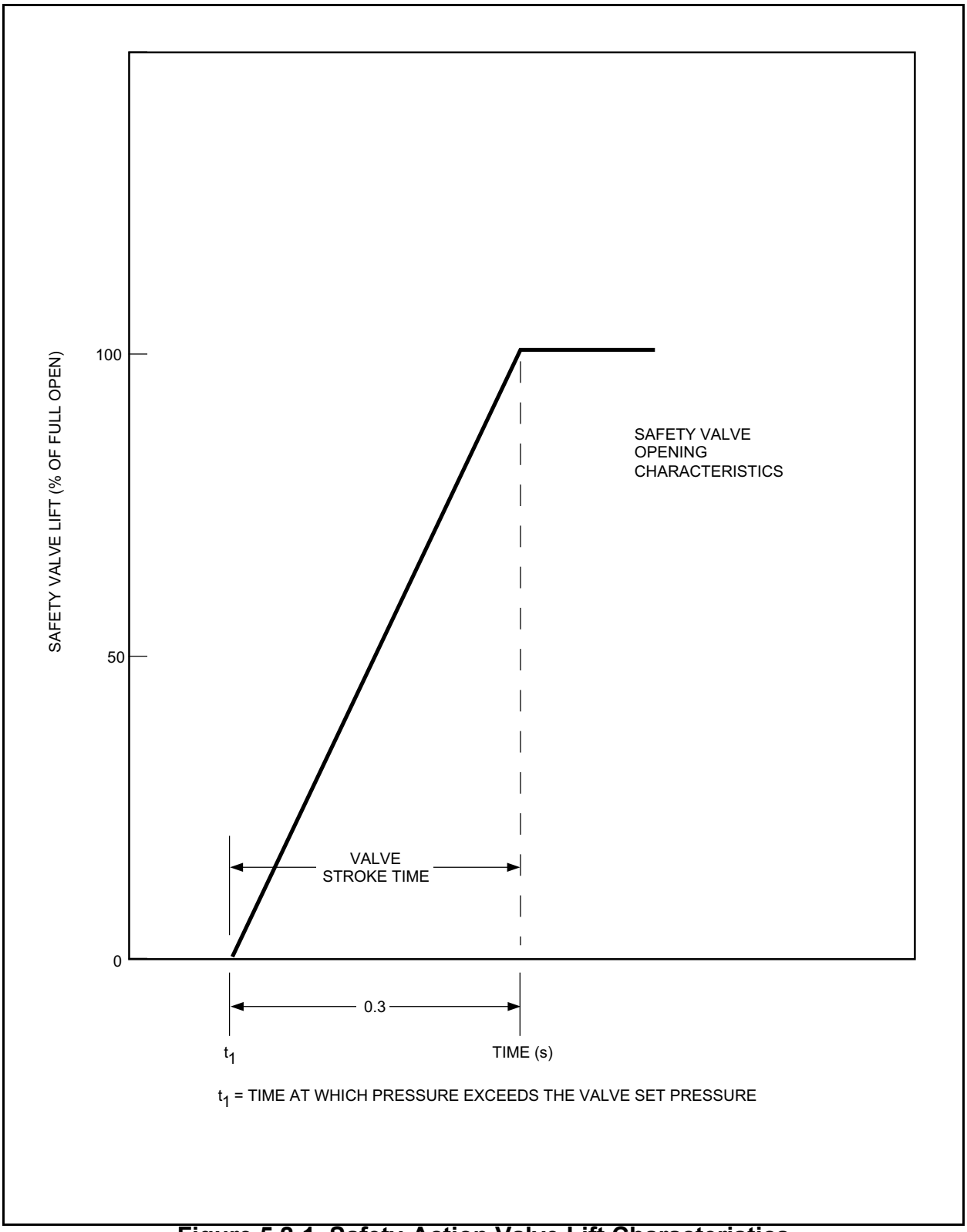

Figure 5.2-1 Safety-Action Valve Lift Characteristics

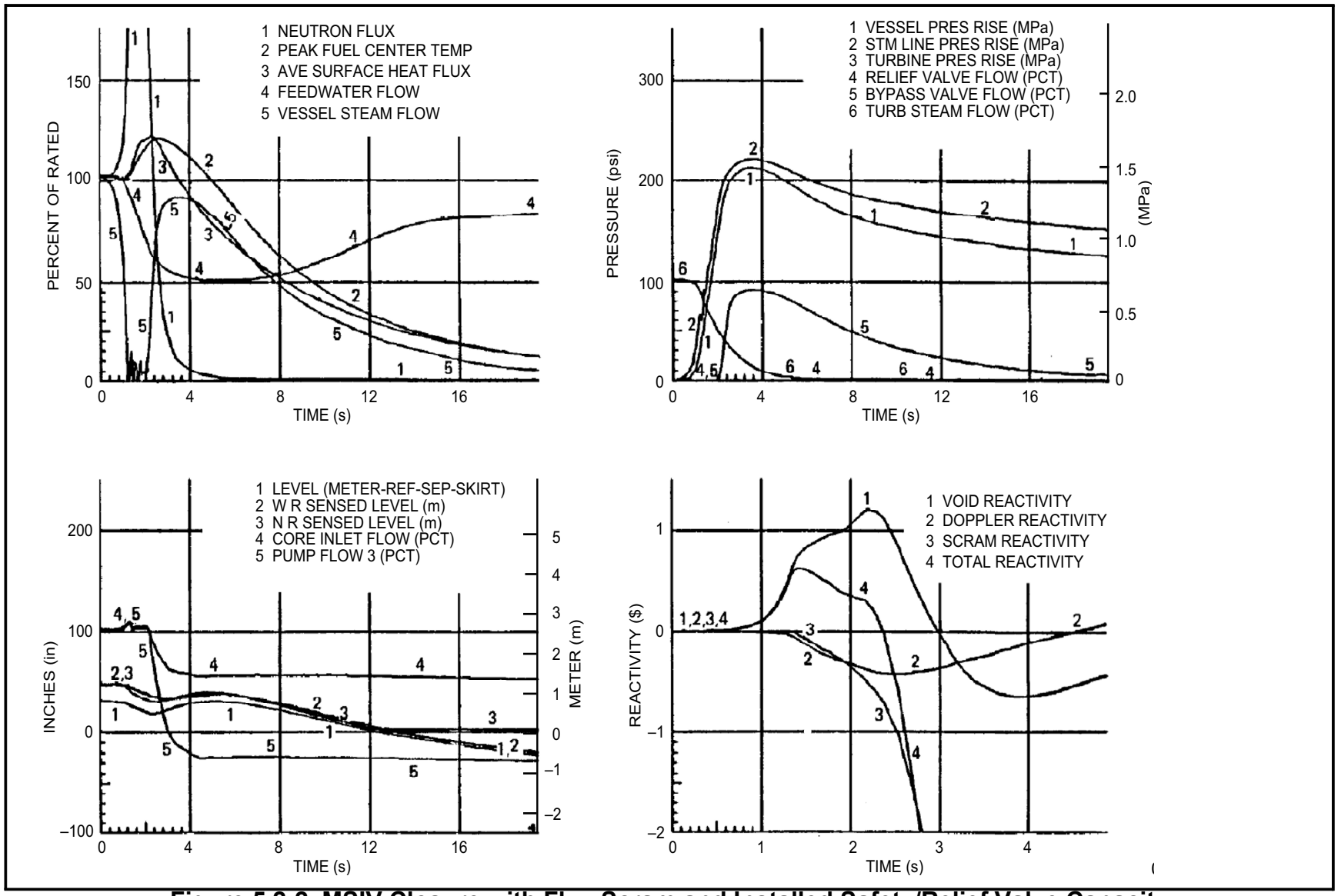

Figure 5.2-2 MSIV Closure with Flux Scram and Installed Safety/Relief Valve Capacity

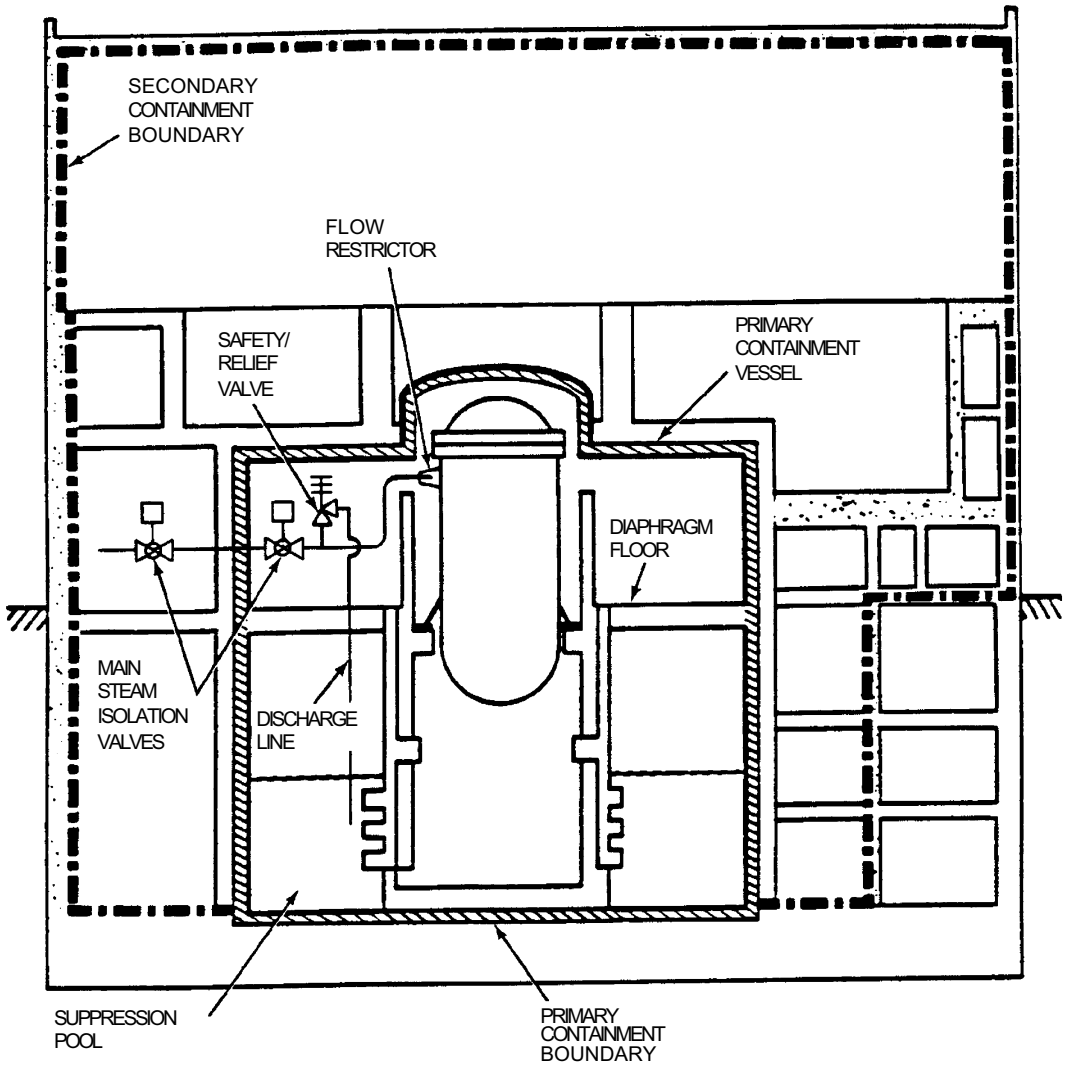

Figure 5.2-3 Safety/Relief Valve Schematic Elevation

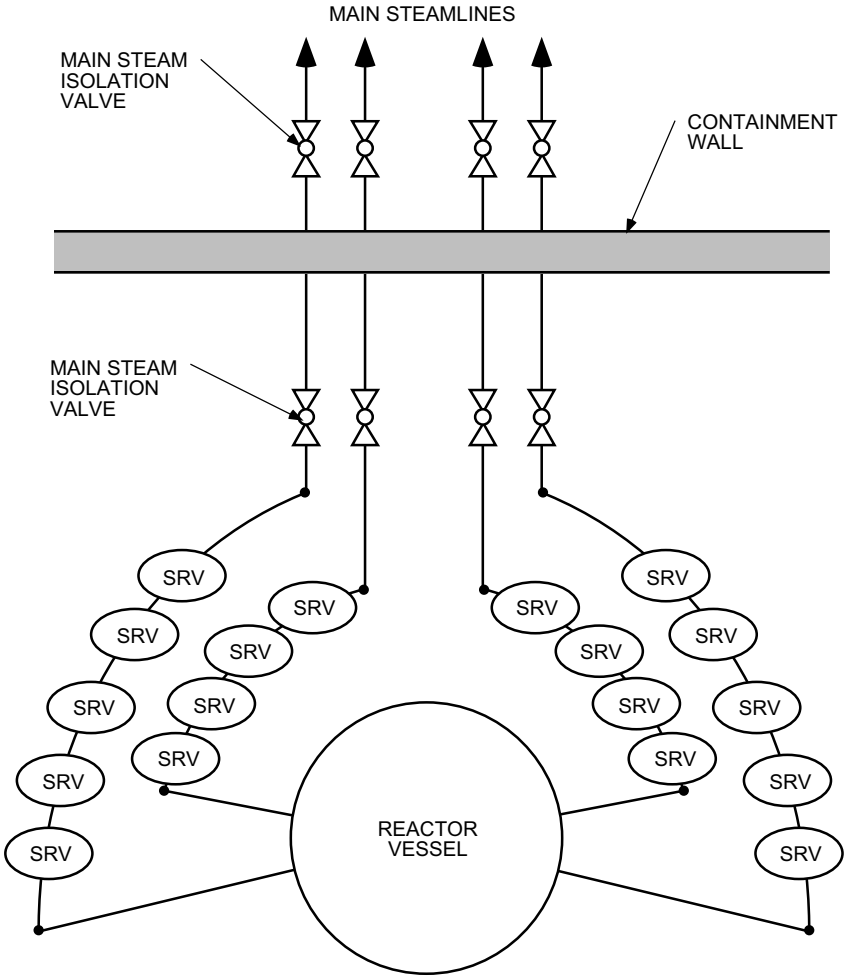

Figure 5.2-4 Safety /Relief Valve and Steamline Schematic

Figure 5.2-5 Not Used

Figure 5.2-6 Not Used

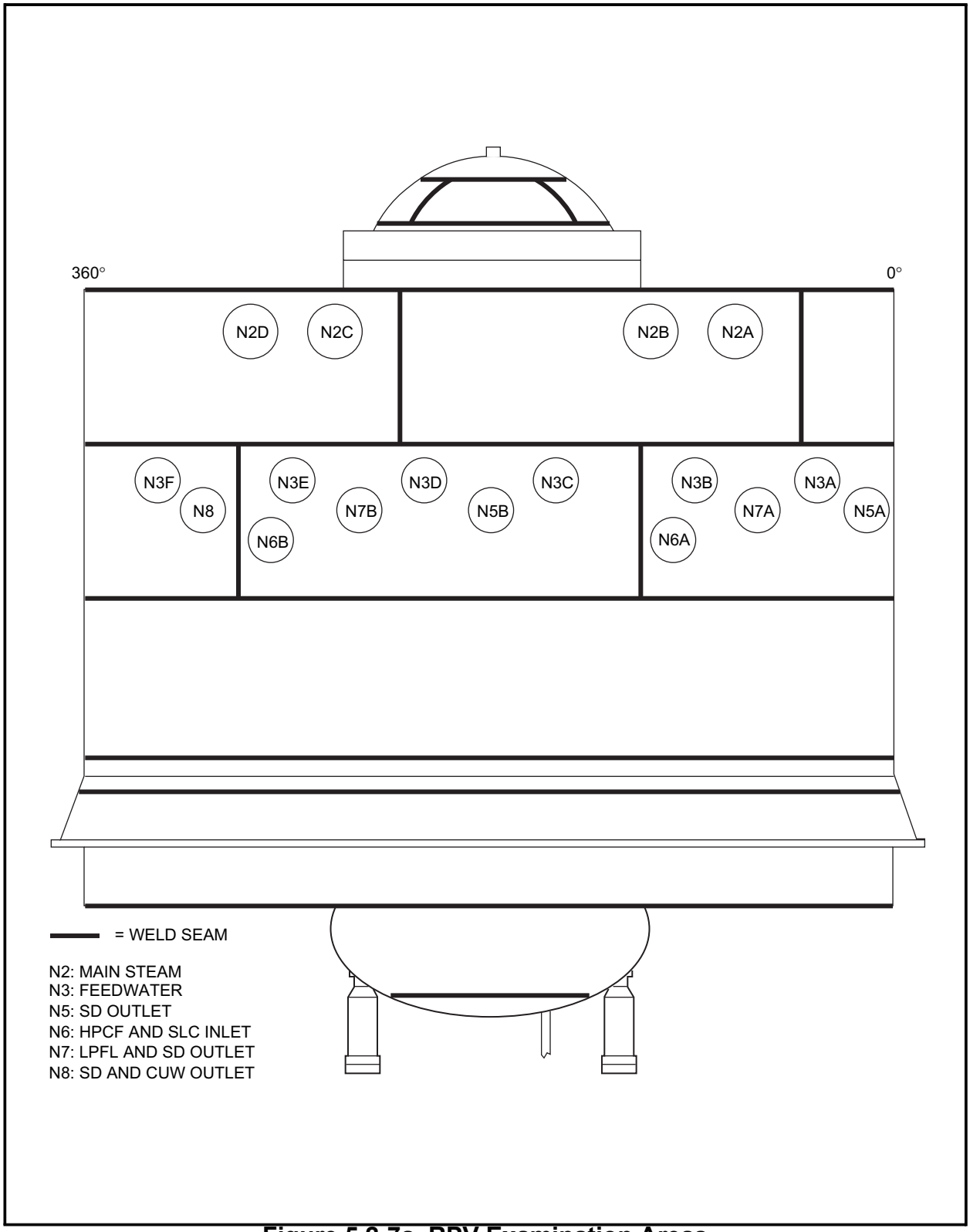

Figure 5.2-7a RPV Examination Areas

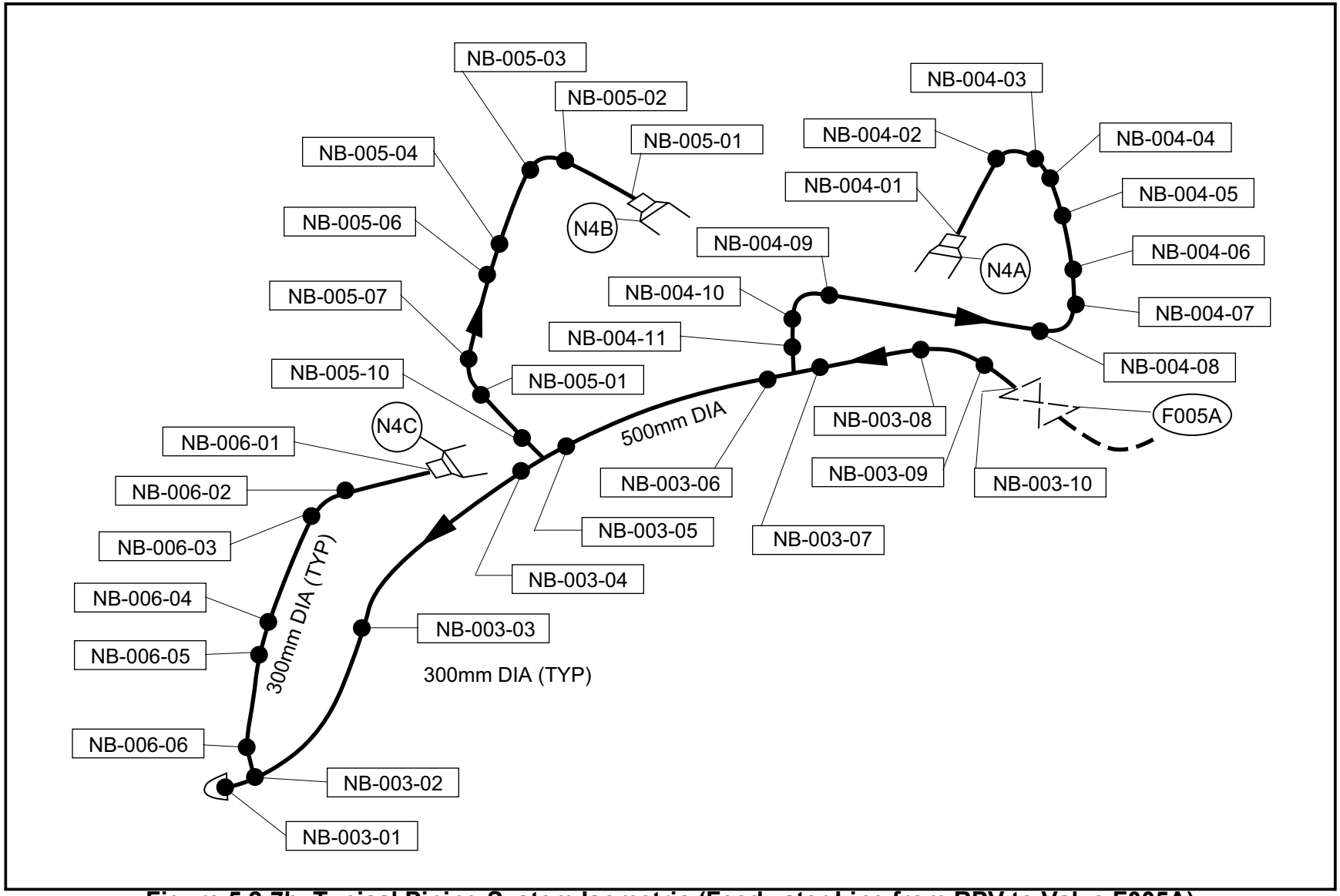

Figure 5.2-7b Typical Piping System Isometric (Feedwater Line from RPV to Valve F005A)

The following figure is located in Chapter 21 :

Figure 5.2-8 Leak Detection and Isolation System IED (Sheets 1 - 10)

5.3 Reactor Vessel

5.3.1 Reactor Vessel Materials

5.3.1.1 Materials Specifications

The materials used in the reactor pressure vessel (RPV) and appurtenances are shown in Table 5.2-4, together with the applicable specifications.

The RPV materials shall comply with the provisions of ASME Code Section III, Appendix I, and meet the specification requirements of 10CFR50 Appendix G.

5.3.1.2 Special Procedures Used for Manufacturing and Fabrication

The RPV is primarily constructed from low alloy, high-strength steel plate and forgings. Plates are ordered to ASME SA-533, TYPE B, Class 1, and forgings to ASME SA-508, Class 3. These materials are melted to fine grain practice and are supplied in the quenched and tempered condition. Further restrictions include a requirement for vacuum degassing to lower the hydrogen level and improve the cleanliness of the low-alloy steels. Materials used in the core beltline region also specify limits of 0.05% maximum copper, 0.012% maximum phosphorous and 0.015% maximum sulfur in the base material and 0.08% maximum copper, 0.012% maximum phosphorus, 0.05% maximum vanadium and 0.015% maximum sulfur content in the weld metal.

Studs, nuts, and washers for the main closure flange are ordered to ASME SA-540, Grade B23 or Grade B24. Welding electrodes for low alloy steel are low-hydrogen type ordered to ASME SFA-5.5.

All plate, forgings, and bolting are 100% ultrasonically tested and surface examined by magnetic particle methods or liquid penetrant methods in accordance with ASME Code Section III, Division 1.

Fracture toughness properties are also measured and controlled in accordance with Division 1.

All fabrication of the RPV is performed in accordance with GEH-approved drawings, fabrication procedures, and test procedures. The shells and vessel heads are made from formed plates or forgings, and the flanges and nozzles from forgings. Welding performed to join these vessel components is in accordance with procedures qualified per ASME Code Section III and IX requirements. Weld test samples are required for each procedure for major vessel full-penetration welds. Tensile and impact tests are performed to determine the properties of the base metal, heat-affected zone, and weld metal.

Submerged arc and manual stick electrode welding processes are employed. Electroslag welding is not applied for structural welds. Preheat and interpass temperatures employed for welding of low-alloy steel meet or exceed the values given in ASME Code, Section III, Appendix D. Post-weld heat treatment at 593°C minimum is applied to all low-alloy steel welds.

Radiographic examination is performed on all pressure-containing welds in accordance with requirements of ASME Code Section III, Subsection NB-5320. In addition, all welds are given a supplemental ultrasonic examination.

The materials, fabrication procedures, and testing methods used in the construction of BWR reactor pressure vessels meet or exceed requirements of ASME Code Section III, Class 1 vessels.

5.3.1.3 Special Methods for Nondestructive Examination

The materials and welds on the RPV are examined in accordance with methods prescribed and meet the acceptance requirements specified by ASME Code Section III. In addition, the pressure-retaining welds are ultrasonically examined. The ultrasonic examination method, including calibration, instrumentation, scanning sensitivity, and coverage, is based on the requirements imposed by ASME Code Section XI, Appendix I. Acceptance standards are equivalent or more restrictive than required by ASME Code Section XI.

5.3.1.4 Special Controls for Ferritic and Austenitic Stainless Steels

5.3.1.4.1 Regulatory Guide 1.31: Control of Stainless Steel Welding

Controls on stainless steel welding are discussed in Subsection 5.2.3.4.2.1.

5.3.1.4.2 Regulatory Guide 1.34: Control of Electroslag Weld Properties

See Subsection 5.2.3.3.2.2.

5.3.1.4.3 Regulatory Guide 1.43: Control of Stainless Steel Weld Cladding of Low-Alloy Steel Components

RPV specifications require that all low-alloy steel be produced to fine grain practice. The requirements of this Regulatory Guide are not applicable to BWR vessels.

5.3.1.4.4 Regulatory Guide 1.44: Control of the Use of Sensitized Stainless Steel

Sensitization of stainless steel is controlled by the use of service proven materials and by use of appropriate design and processing steps, including solution heat treatment, corrosion-resistant cladding, control of welding heat input, control of heat treatment during fabrication, and control of stresses.

5.3.1.4.5 Regulatory Guide 1.50: Control of Preheat Temperature for Welding Low-Alloy Steel

Regulatory Guide 1.50 delineates preheat temperature control requirements and welding procedure qualifications supplementing those in ASME Sections III and IX.

The use of low-alloy steel is restricted to the reactor pressure vessel. Other ferritic components in the reactor coolant pressure boundary are fabricated from carbon steel materials.

Preheat temperature employed for welding of low alloy steel meet or exceed the recommendations of ASME Code Section III, Appendix D. Components are either held for an extended time at preheat temperature to assure removal of hydrogen, or preheat is maintained until post-weld heat treatment. The minimum preheat and maximum interpass temperatures are specified and monitored.

Acceptance Criterion II.3.b(1)(a) of SRP Section 5.2.3 for control of preheat temperature requires that minimum and maximum interpass temperature be specified. While the ABWR control of low-hydrogen electrodes to prevent hydrogen cracking (provided in Subsection 5.2.3.3.4) does not explicitly meet this requirement, the ABWR control will assure that cracking of components made from low-alloy steels does not occur during fabrication. Further, the ABWR control minimizes the possibility of subsequent cracking resulting from hydrogen being retained in the weldment.

All welds are nondestructively examined by radiographic methods. In addition, a supplemental ultrasonic examination is performed.

5.3.1.4.6 Regulatory Guide 1.71: Welder Qualification for Areas of Limited Accessibility

Qualification for areas of limited accessibility is discussed in Subsection 5.2.3.4.2.3.

5.3.1.4.7 Regulatory Guide 1.99: Effects of Residual Elements on Predicted Radiation Damage to Reactor Pressure Vessel Materials

Predictions for changes in transition temperature and upper shelf energy (USE) are made in accordance with the requirements of Regulatory Guide 1.99.

5.3.1.4.8 Regulatory Guide 1.37: Quality Assurance Requirements for Cleaning of Fluid Systems and Associated Components of Water-Cooled Nuclear Power Plants

The cleaning of systems and components on the site during and at the completion of construction is accomplished to written procedures which assure both cleanliness and that the components are not exposed to materials or practices which will degrade their performance. For components containing stainless steel, the procedures will comply with Regulatory Guide 1.37. The procedures will prohibit contact with low melting point compounds, substances which are known to cause stress corrosion cracking or which can release in any manner substances that can cause such problems. In addition, there are controls placed on the use of grinding wheels and wire brushes that assure that they cannot introduce degrading materials either through prior usage or through their materials of construction (in this context, degradation includes stress corrosion cracking). Controls also control introduction of unnecessary dirt and require control of dirt producing processes such as welding or grinding including prompt cleaning.

5.3.1.5 Fracture Toughness

5.3.1.5.1 Compliance with 10CFR50, Appendix G

10CFR50 Appendix G is interpreted for Class 1 primary coolant pressure boundary component of the ABWR reactor design and complied with as discussed in Subsections 5.3.1.5.2 and 5.3.2. The specific temperature limits on operation of the reactor when the core is critical are based on 10CFR50 Appendix G, Paragraph IV, A.3 (Subsection 5.3.4.1 for fracture toughness data interface requirements).

5.3.1.5.2 Methods of Compliance

The following items are the interpretations and methods used to comply with 10CFR50 Appendix G:

(1) Material Test Coupons and Test Specimens (GIII-A)

Test coupons are removed from the location in each product form as specified in Subarticle NB-2220 of ASME Code Section III. The heat treatment of the test coupons is performed in accordance with Subarticle NB-2210.

It is understood that separately produced test coupons per Subparagraph NB-2223.3 may be used for forgings.

(2) Location and Orientation of Test Specimens (G III-A)

The test specimens are located and oriented per ASME Section III, Paragraph NB-2322. Transverse Charpy V-notch impact specimens are used for the testing of plate and forged material other than bolting and bars. Longitudinal specimens are used for bolting and bars.

Both longitudinal and transverse specimens are used to determine the required minimum USE level of the core beltline materials.

In regard to 10CFR50 Appendix H, the surveillance test material is selected on the basis of the requirements of ASTM E185-82 and Regulatory Guide 1.99 to provide a conservative adjusted reference temperature for the beltline materials. The weld test plate for the surveillance program specimens has the principal working direction parallel to the weld seam to assure that heat-affected zone (HAZ) specimens are transverse to the principal working direction (Subsection 5.3.4.1 for materials and surveillance capsule COL license information).

(3) Records and Procedures for Impact Testing (G III-C)

Preparation of impact testing procedures, calibration of test equipment, and the retention of the records of these functions and test data comply with the requirements

of ASME Code Section III. Personnel conducting impact testing are qualified by experience, training or qualification testing that demonstrates competence to perform tests in accordance with the testing procedure.

(4) Charpy V-notch Curves for the RPV Beltline (G-IIIA and G-IVA-1)

A full transverse Charpy V-notch curve is determined for all heats of base material and weld metal used in the core beltline region with a minimum of three (3) specimens tested at the actual T_{NDT}. The minimum USE level for base material and weld metal in the beltline region is 102.2 N·m as required by G-IVA.1.

In regard to G-III A, it is understood that separate, unirradiated baseline specimens per ASTM E-185, Paragraph 6.3.1 will be used to determine the transition temperature curve of the core beltline base material, HAZ and weld metal.

(5) Bolting Material

All bolting material exceeding 25.4 mm diameter has a minimum of 61.0 N·m Charpy-V energy and 0.64 mm lateral expansion at the minimum bolt preload temperature of 13°C.

(6) Alternative Procedures for the Calculation of Stress Intensity Factor (Appendix G-IV A)

Stress intensity factors are calculated by the methods of ASME Code Section III, Appendix G. Discontinuity regions are evaluated using the same general procedure as for shell and head areas. The evaluation is a part of the detailed thermal and stress analysis in the vessel stress report. Considerations are given to membrane and bending stresses, as outlined in Paragraph G-2222. Equivalent margins of safety to those required for shells and heads are demonstrated using a 0.25 T postulated defect at all locations, with the exception of the main closure flange to the head and shell discontinuity locations. Additional instruction on operating limits is required for outside surface flaw sizes greater than 6.0 mm at the outside surface of the flange to shell joint based on analysis made for ABWR reactor vessels using the calculations methods shown in WRCB 175. It will be demonstrated, using a test mockup of these areas, that smaller defects can be detected by the ultrasonic inservice examinations procedures required at the adjacent weld joint.

(7) Fracture Toughness Margins in the Control of Reactivity (Appendix G-IV A).

ASME Code Section III, Appendix G, was used in determining pressure/temperature limitations for all phases of plant operation.

5.3.1.6 Material Surveillance

5.3.1.6.1 Compliance with Reactor Vessel Material Surveillance Program Requirements

The materials surveillance program monitors changes in the fracture toughness properties of ferritic materials in the reactor vessel beltline region resulting from exposure to neutron irradiation and thermal environment.

Reactor vessel materials surveillance specimens are provided in accordance with requirements of ASTM E-185 and 10CRF 50 Appendix H. Materials for the program are selected to represent materials used in the reactor beltline region. Charpy V-notch and tensile specimens are manufactured from the material actually used in the reactor beltline region. To represent those, if any, RPV pressure boundary welds that are in the beltline region (or are exposed to the predicted maximum neutron fluence (E>1.60E-13J) at the end of the design lifetime exceeding $1x10^{17}$ neutron/cm^2 at the inside surface of the reactor vessel), Charpy V-notch specimens of weld metal and HAZ material, and tensile specimens of weld metal are manufactured from the sample welds. The same hat of weld wire and lot of flux (if applicable) and the same welding practice as used for the beltline weld are utilized to make the sample welds. The specimen capsules are provided, each containing 12 Charpy V-notch and 3 tensile specimens of the beltline material and temperature monitors. Additionally, if required, the specimens identified to represent the welds requiring surveillance are also loaded in the same numbers. The surveillance specimen holders having brackets welded to the vessel cladding in the core beltline region are provided to hold the specimen capsules and a neutron dosimeter. Since reactor vessel specifications require that all low-alloy steel pressure vessel boundary materials be produced to fine-grain practice, the bracket welding does not pose a concern of underclad cracking. A set of out-of-reactor baseline Charpy V-notch specimens, tensile specimens, and archive material are provided with the surveillance test specimens. The neutron dosimeter and temperature monitors will be located as required by ASTM E-185.

Four surveillance capsules are provided. The predicted end of the adjusted reference nil ductility temperature of the reactor vessel steel is less than 38°C.

The following proposed withdrawal schedule is extrapolated from ASTM E-185.

- First Capsule: After 6 effective full-power years.
- Second Capsule: After 20 effective full-power years.
- Third Capsule: With an exposure not to exceed the peak EOL fluence.
- Fourth Capsule: Schedule determined based on results of first two capsules per ASTM E-185, Paragraph 7.6.2 (see Section 5.3.4.2 for additional capsule requirements). Fracture toughness testing of irradiated capsule specimens will be in accordance with requirements of ASTM E-185 as called out for by 10CFR50 Appendix H.

5.3.1.6.2 Neutron Flux and Fluence Calculations

A description of the methods of analysis is contained in Subsections 4.1.4.5 and 4.3.2.2.

5.3.1.6.3 Predicted Irradiation Effects on Beltline Materials

Transition temperature changes and changes in upper-shelf energy shall be calculated in accordance with the rules of Regulatory Guide 1.99. Reference temperatures shall be established in accordance with 10CFR50 Appendix G and NB-2330 of the ASME Code.

Since weld material chemistry and fracture toughness data are not available at this time, the limits in the purchase specification were used to estimate worst-case irradiation effects.

These estimates show that the adjusted reference temperature at end-of-life is less than 34°C, and the end-of-life USE exceeds 6.7 N·m (see response to Question 251.5 for the calculation and analysis associated with this estimate).

5.3.1.6.4 Positioning of Surveillance Capsules and Methods of Attachment Appendix H.II B (2)

The surveillance specimen holders, described in Subsections 5.3.1.6.1 and 3.9.5.1.2.10, are located at different azimuths at common elevation in the core beltline region. The locations are selected to produce lead factor of approximately 1.2 to 1.5 for the inserted specimen capsules. A positive spring-loaded locking device is provided to retain the capsules in position throughout any anticipated event during the lifetime of the vessel. The capsules can be removed from and reinserted into the surveillance specimen holders. See Subsection 5.3.4.2 for COL license information requirements pertaining to the surveillance material, lead factors, withdrawal schedule and neutron fluence levels.

In areas where brackets (such as the surveillance specimen holder brackets) are located, additional nondestructive examinations are performed on the vessel base metal and stainless steel weld-deposited cladding or weld-buildup pads during vessel manufacture. The base metal is ultrasonically examined by straight-beam techniques to a depth at least equal to the thickness of the bracket being joined. The area examined is the area of width equal to at least half the thickness of the part joined. The required stainless steel weld-deposited cladding is similarly examined. The full penetration welds are liquid-penetrant examined. Cladding thickness is required to be at least 3.2 mm. These requirements have been successfully applied to a variety of bracket designs which are attached to weld-deposited stainless steel cladding or weld buildups in many operating BWR reactor pressure vessels.

5.3.1.6.5 Time and Number of Dosimetry Measurements

GEH provides a separate neutron dosimeter so that fluence measurements may be made at the vessel ID during the first fuel cycle to verify the predicted fluence at an early date in plant operation. This measurement is made over this short period to avoid saturation of the dosimeters now available. Once the fluence-to-thermal power output is verified, no further

dosimetry is considered necessary because of the linear relationship between fluence and power output. It will be possible, however, to install a new dosimeter, if required, during succeeding fuel cycles.

5.3.1.7 Reactor Vessel Fasteners

The reactor vessel closure head (flange) is fastened to the reactor vessel shell flange by multiple sets of threaded studs and nuts. The lower end of each stud is installed in a threaded hole in the vessel shell flange. A nut and washer are installed on the upper end of each stud. The proper amount of preload can be applied to the studs by sequential tensioning using hydraulic tensioners.

Hardness tests are performed on all main closure bolting to demonstrate that heat treatment has been properly performed.

5.3.1.8 Regulatory Guide 1.65

Regulatory Guide 1.65 defines acceptable materials and testing procedures with regard to reactor vessel closure stud bolting for light-water-cooled reactors.

The design and analysis of reactor vessel bolting materials is in full compliance with ASME Code Section III, Class I, requirements. The RPV closure studs are SA-540 Grade B23 or 24 (AISI 4340). The maximum allowable ultimate tensile strength is 1172 MPa. Also, the Charpy impact test requirements of NB-2333 will be satisfied (the lowest C_V energy will be greater than the requirement of 61 N·m at 21°C; the lowest reported C_V expansion will exceed the 0.64 mm required).

In regards to regulatory position C.2.b, the bolting materials are ultrasonically examined in accordance with ASME Code Section III, Paragraph NB-2580, after final heat treatment and prior to threading as specified. The requirements for examination according to ASME Code Section II, SA-388 and ASTM A614 were met. The procedures approved for use in practice are judged to insure comparable material quality and are considered adequate on the basis of compliance with the applicable requirements of ASME Code Subarticle NB-2580.

The straight-beam examination is performed on 100% of cylindrical surfaces and from both ends of each stud using a 19 mm maximum diameter transducer. The reference standard for the radial scan contains a 12.7 mm diameter flat-bottom hole with a depth of 10% of the thickness. The end scan standard is per ASTM A614. Surface examinations are performed on the studs and nuts after final heat treatment and threaded as specified in the guide, in accordance with ASTM A614. Any indication greater than the indication from the applicable calibration feature is unacceptable. The distance/amplitude correction curve for the straight beam end scan of main closure studs, nuts, and washers are established as follows:

For cylinders having a length (L) to O.D. ratio or 7 or less, the distance/amplitude curve is established by a minimum of three test points along the test distance. For

cylinders having length to O. D. ratios larger than 7, the minimum number of test points is four. The test points are nearly equally spaced along the test distance. One calibration hole is located at a test distance equal to L/2.

5.3.2 Pressure/Temperature Limits

5.3.2.1 Limit Curves

The pressure/temperature limit curves in Figure 5.3-1 are based on the requirements of 10CFR50 Appendix G. The pressure/temperature limits look different than SRP Section 5.3.2 because the ABWR temperature limits are based on a more recent revision of Regulatory Guide 1.99.

All the vessel shell and head areas remote from discontinuities plus the feedwater nozzles were evaluated, and the operating limit curves are based on the limiting location. The boltup limits for the flange and adjacent shell region are based on a minimum metal temperature of RT_{NDT} plus 33°C. The maximum throughwall temperature gradient from continuous heating or cooling at 55.5°C per hour was considered. The safety factors applied were as specified in ASME Code Appendix G and Reference 5.3-2.

The material for the vessel will be provided with the following requirements of RT_{NDT} as determined in accordance with Branch Technical Position MTEB 5-2: shell and flanges –20°C; nozzles –20°C and welds –20°C (Subsection 5.3.4.3 for COL license information).

5.3.2.1.1 Temperature Limits for Boltup

Minimum closure flange and fastener temperatures of RT_{NDT} plus 33°C are required for tensioning at preload condition and during detensioning. Thus, the minimum limit is –20°C + 33°C = + 13°C.

5.3.2.1.2 Temperature Limits for ISI Hydrostatic and Leak Pressure Tests

Pressure (measured in the top head) versus temperature (minimum vessel shell and head metal temperature) limits to be observed for the test and operating conditions are specified in Figure 5.3-1. Temperature limits for preservice and inservice tests are shown in Curve A of Figure 5.3-1.

5.3.2.1.3 Operating Limits During Heatup, Cooldown, and Core Operation

Heatup and Cooldown

Curve B in Figure 5.3-1 specifies limits for non-nuclear heatup and cooldown following a nuclear shutdown.

Reactor Operation

Curve C in Figure 5.3-1 specifies limits applicable for operation whenever the core is critical except for low-level physics tests.

5.3.2.1.4 Reactor Vessel Annealing

In-place annealing of the reactor vessel, because of radiation embrittlement, is not anticipated to be necessary.

5.3.2.1.5 Predicted Shift in RT_{NDT} and Drop in Upper-Shelf Energy (Appendix G-IV B)

For design purposes, the adjusted reference nil ductility temperature and drop in the upper-shelf energy for BWR vessels is predicted using the procedures in Regulatory Guide 1.99.

The calculations (see response to Question 251.5) are based on the limits of phosphorous (0.020%), copper (0.08%) and nickel (1.2%) in the weld material. In plate material, the limits are copper (0.05%) and nickel (0.73%). Forgings will have the same chemistry as plate but the nickel limit is 1%.

An evaluation of fast neutron fluence for the ABWR vessel was done using the Oak Ridge National Laboratory code DOT-4 on a CRAY X-MP Super Computer using an eighth core symmetry fixed source model. The neutron source was based upon a three dimensional nodal fuel model of ABWR for an integrated equilibrium core with a 26 group neutron spectrum. The results shown in Table 5.3-1 are reasonable in comparison to the BWR/6 calculations which were performed with an older version of DOT. In this comparison, the BWR/6 40 year quarter thickness evaluations for the 218-624 plant were compared to the 40 year BWR/6 238-748 plant and the 40 year ABWR values which are shown on line three of Table 5.3-1. In evaluating the relative fluence, the power level and shroud to vessel water thickness were taken into account. In the case of the water thickness, the neutron reduction factor was interpolated from Figure 5.3-3 which shows the calculated fast neutron flux for an annular region as a function of water thickness. The incorporation of internal pumps increased the annulus between the shroud and the vessel wall for ABWR. This leads to an order of magnitude reduction in the expected fast fluence.

A surveillance program in accordance with ASTM E-185 will be used. The surveillance program will include samples of base metal and weld metal and HAZ material, if required (see Subsection 5.3.1.6 for details on the surveillance program).

5.3.2.2 Operating Procedures

A comparison of the pressure versus temperature limit in Subsection 5.3.2.1 with intended normal operation procedures of the most severe service Level B transient shows that those limits will not be exceeded during any foreseeable upset condition. Reactor operating procedures have been established so that actual transients will not be more severe than those for which the vessel design adequacy has been demonstrated. Of the design transients, the service Level B condition producing the most adverse temperature and pressure condition anywhere in the vessel head and/or shell areas yields a minimum fluid temperature of 276°C and a maximum peak pressure of 8.38 MPaG. Scram automatically occurs as a result of this event prior to a possible reduction in fluid temperature to 121°C at a pressure of 6.41 MPaG. Per Figure 5.3-1,

both the 8.38 MPaG vessel pressure at 276°C (Curve C) and the 6.41 MPaG at 121°C (Curve B) are within the calculated margin against nonductile failure.

5.3.3 Reactor Vessel Integrity

The reactor vessel material, equipment, and services associated with the reactor vessels and appurtenances would conform to the requirements of the subject purchase documents. Measures to ensure conformance included provisions for source evaluation and selection, objective evidence of quality furnished, inspection at the vendor source and examination of the completed reactor vessels.

GEH provides inspection surveillance of the reactor vessel fabricator in-process manufacturing, fabrication, and testing operations in accordance with the GEH quality assurance program and approved inspection procedures. The reactor vessel fabricator is responsible for the first level inspection of manufacturing, fabrication, and testing activities, and GEH is responsible for the first level of audit and surveillance inspection.

Adequate documentary evidence that the reactor vessel material, manufacture, testing, and inspection conforms to the specified quality assurance requirements contained in the procurement specification is available at the fabricator plant site.

Regulatory Guide 1.2, “Thermal Shock to Reactor Pressure Vessels”, states that potential RPV brittle fracture, which may result from ECCS operation, need not be reviewed in individual cases if no significant changes in presently approved core and pressure vessel designs are proposed. If the margin of safety against RPV brittle fracture due to ECCS operation is considered unacceptable, an engineering solution, such as annealing, could be applied to assure adequate recovery of the fracture toughness properties of the vessel material. Regulatory Guide 1.2 requires that engineering solutions be outlined and requires demonstration that the design does not preclude use of the solutions.

An investigation of the structural integrity of BWR pressure vessels during a design basis accident (DBA) has been conducted (Reference 5.3-1). It has been determined, based on methods of fracture mechanics, that no failure of the vessel by brittle fracture as a result of DBA will occur.

The investigation included:

(1) A comprehensive thermal analysis considering the effect of blowdown and the Low-Pressure Coolant Injection System reflooding.

(2) A stress analysis considering the effects of pressure, temperature, seismic load, jet load, dead weight, and residual stresses.

(3) The radiation effect on material toughness (RT_{NDT} shift and critical stress intensity).

(4) Methods for calculating crack tip stress intensity associated with a nonuniform stress field following the design basis accident.

This analysis incorporated very conservative assumptions in all areas (particularly in the areas of heat transfer, stress analysis, effects of radiation on material toughness, and crack tip stress intensity). Therefore, because the results reported (Reference 5.3-1) provide an upper-bound approach, it is concluded that catastrophic failure of the pressure vessel due to DBA is impossible from a fracture mechanics point of view. In the case studies, even if an acute flaw does form on the vessel inner wall, it will not propagate as the result of the DBA.

The criteria of 10CFR50 Appendix G are interpreted as establishing the requirements of annealing. Paragraph IV B requires the vessels to be designed for annealing of the beltline only where the predicted value of adjusted RT_{NDT} exceeds 93°C, as defined in Paragraph NB-2331 of ASME Code Section III. This predicted value is not exceeded; therefore, design for annealing is not required (see Subsection 5.3.1.5 for further discussion of fracture toughness of the reactor pressure vessel).

5.3.3.1 Design

5.3.3.1.1 Description

5.3.3.1.1.1 Reactor Vessel

The reactor vessel (Figures 5.3-2a and 5.3-2b and Table 5.3-2) is a vertical, cylindrical pressure vessel of welded construction. The vessel is designed, fabricated, tested, inspected, and stamped in accordance with ASME Code Section III Class 1 requirements, including the addenda in effect at the date of order placement (Table 1.8-21).

Design of the reactor vessel and its support system meets Seismic Category I equipment requirements. The materials used in the reactor pressure vessel are listed in Table 5.2-4.

The cylindrical shell and top and bottom heads of the reactor vessel are fabricated of low-alloy steel, the interior of which is clad with stainless steel weld overlay except for the top head, all nozzles but the steam outlet nozzles and the reactor internal pump casings. The bottom head is clad with Ni-Cr-Fe alloy. The reactor internal pump penetrations are clad with Ni-Cr-Fe alloy, or alternatively stainless steel.

In-place annealing of the reactor vessel is not necessary because shifts in transition temperature caused by irradiation during the 60-year life can be accommodated by raising the minimum pressurization temperature, and the predicted value of adjusted reference temperature does not exceed 93°C. Radiation embrittlement is not a problem outside of the vessel beltline region because the irradiation in those areas is less than 1×10^{18} neutron/cm^2 with neutron energies in excess of 1.60 E-13J. The use of existing methods of predicting embrittlement and operating limits which are based on a 40-year life are considered to be applicable to a 60-year life because the age degrading mechanism is irradiation and fatigue duty which are calculated for the 60-

year life. Time/temperature effects will either not have any effect or will produce a small beneficial co-annealing.

Quality control methods used during the fabrication and assembly of the reactor vessel and appurtenances assure that design specifications are met.

The vessel top head is secured to the reactor vessel by studs and nuts. These nuts are tightened with a stud tensioner. The vessel flanges are sealed with two concentric metal seal-rings designed to permit no detectable leakage through the inner or outer seal at any operating condition, including heating to operating pressure and temperature at a maximum rate of 55°C in any one-hour period. To detect seal failure, a vent tap is located between the two seal-rings. A monitor line is attached to the tap to provide an indication of leakage from the inner seal-ring seal.

5.3.3.1.1.2 Shroud Support

The shroud support is a circular plate welded to the vessel wall and to a cylinder supported by vertical stilt legs from the bottom head. This support is designed to carry the weight of peripheral fuel elements, neutron sources, core plate, top guide and the steam separators and to laterally support the fuel assemblies and the pump diffusers. Design of the shroud support also accounts for pressure differentials across the shroud support plate, for the restraining effect of components attached to the support, and for earthquake loadings. The shroud support design is specified to meet appropriate ASME Code stress limits.

5.3.3.1.1.3 Protection of Closure Studs

The BWRs do not use borated water for reactivity control during normal operation. This subsection is therefore not applicable.

5.3.3.1.2 Safety Design Basis

The design of the reactor vessel and appurtenances meets the following safety design bases:

(1) The reactor vessel and appurtenances will withstand adverse combinations of loading and forces resulting from operation under abnormal and accident conditions.

(2) To minimize the possibility of brittle fracture of the nuclear system process barrier, the following are required:

(a) Impact properties at temperatures related to vessel operation have been specified for materials used in the reactor vessel.

(b) Expected shifts in transition temperature during design life as a result of environmental conditions, such as neutron flux, are considered in the design and operational limitations to assure that NDT temperature shifts are accounted for in reactor operation.

(c) Operational margins to be observed with regard to the transition temperature are specified for each mode of operation.

5.3.3.1.3 Power Generation Design Bases

The design of the reactor vessel and appurtenances meets the following power generation design bases:

(1) The reactor vessel has been designed for a useful life of 60 years.

(2) External and internal supports that are integral parts of the reactor vessel are located and designed so that stresses in the vessel and supports that result from reactions at these supports are within ASME Code limits.

(3) Design of the reactor vessel and appurtenances allows for a suitable program of inspection and surveillance.

5.3.3.1.4 Reactor Vessel Design Data

The reactor vessel design pressure is 8.62 MPaG and the design temperature is 302°C. The maximum installed test pressure is 10.78 MPaG.

5.3.3.1.4.1 Vessel Support Skirt

The vessel support skirt is constructed as an integral part of the RPV. Steel anchor bolts extend from the RPV pedestal through the flange of the skirt to secure the support skirt with the pedestal. The design is in accordance with ASME Code Section III, Division 1, NF. The connection is a friction-type joint where the bolts are pretensioned to the extent necessary to ensure that there will be no relative movement between the RPV and its pedestal. Shear forces are resisted by friction between the skirt flangeplate and the pedestal mounting plate or shear between the flange and mounting bolts.

Loading conditions are given in Table 3.9-2 of Subsection 3.9.

5.3.3.1.4.2 Control Rod Drive Housings

The control rod drive (CRD) housings are inserted through the CRD housing penetrations in the reactor vessel bottom head and are welded to Inconel stub tubes. Each housing transmits loads through the stub tubes to the bottom head of the reactor. These loads include the weights of a control rod, a control rod drive, a control rod guide tube, a four-lobed fuel-support piece, and the four fuel assemblies that rest on the fuel support piece. The housings are provided with lateral supports and are fabricated of Type-304 austenitic stainless steel.

5.3.3.1.4.3 Incore Neutron Flux Monitor Housings

Each incore neutron flux monitor housing is inserted through the incore penetrations in the bottom head, welded to Inconel stub tubes and provided with lateral supports.

An incore flux monitor guide tube is welded to the top of each housing and a startup range neutron monitor (SRNM) or a local power range monitor (LPRM) is supported from the seal/ring flange bolted at the bottom of the housing outside the vessel (Section 7.6).

5.3.3.1.4.4 Reactor Vessel Insulation

The RPV insulation is reflective metal type, constructed entirely of series 300 stainless steel and designed for a 60-year life. The insulation is made of prefabricated units engineered to fit together and maintain the insulation efficiency during temperature changes. The insulation is designed to remain in place and resist damage during a safe shutdown earthquake. Each unit is designed to permit free drainage of any moisture that may accumulate in the unit and prevent internal pressure buildup due to trapped gases.

The insulation for the RPV is supported from the biological shield wall surrounding the vessel and not from the vessel shell. Insulation for the upper head and flange is supported by a steel frame independent of the vessel and piping. During refueling, the support frame along the top head insulation is removed. The support frame is designed as a Seismic Category I structure. Insulation access panels and insulation around penetrations is designed in sections with quick release latches, which provide for ease of installation and removal for vessel inservice inspection and maintenance operation. Each insulation unit has lifting fittings attached to facilitate removal. Insulation units attached to the shield wall are not required to be readily removable except around penetrations.

At operating conditions, the insulation on the shield wall and around the refueling bellows has an average maximum heat transfer rate of 736.9 kJ/m^{2}h of outside insulation surface. The maximum heat transfer rate for insulation on the top head is 682.4 kJ/m^{2}h. The outside temperature of the reactor vessel is assumed to be the same as the reactor operating temperature 288°C, with the drywell air temperature being 57°C maximum. The maximum air temperature is 66°C, except for the head area above the bulkhead and refueling seal which has a maximum allowable temperature of 93°C.

5.3.3.1.4.5 Reactor Vessel Nozzles

All piping connected to the reactor vessel nozzles has been designed not to exceed the allowable loads on any nozzle. The vessel top head nozzle is provided with flanges with small groove facings. For prototype reactor internals testing, a flanged top head nozzle is provided to bolt with the flange associated with the test instrumentation. The drain nozzle is of the full penetration weld design. The feedwater inlet nozzles, core flooder inlet nozzles, and ECCS flooding nozzles have thermal sleeves. Nozzles connecting to stainless steel piping have safe ends or extensions made of stainless steel. These safe ends or extensions were welded to the nozzles after the pressure vessel was heat treated to avoid furnace sensitization of the stainless steel. The material used is compatible with the material of the mating pipe.

5.3.3.1.4.6 Materials and Inspections

The reactor vessel was designed and fabricated in accordance with the applicable ASME Boiler and Pressure Vessel Code as defined in Subsection 5.2.1. Table 5.2-4 defines the materials and specifications. Subsection 5.3.1.6 defines the compliance with reactor vessel material surveillance program requirements.

5.3.3.1.4.7 Reactor Vessel Schematic

The reactor vessel schematic is shown in Figure 5.3-2a.

5.3.3.2 Materials of Construction

All material used in the construction of the RPV conforms to the requirements of ASME Code Section II materials. The vessel heads, shells, flanges, and nozzles are fabricated from low-alloy steel plate and forgings purchased in accordance with ASME Specifications SA-533 Type B, Class 1 and SA-508 Class 3. Interior surfaces of the vessel are clad with austenitic stainless steel or Ni-Cr-Fe weld overlay. The material in the beltline region and below is SA-508 Class 3 forged rings.

These materials of construction were selected because they provide adequate strength, fracture toughness, fabricability, and compatibility with the BWR environment. Their suitability has been demonstrated by long term successful operating experience in reactor service.

The expected peak neutron fluence at the 0.25 t location used for evaluation is less than 6×10^{17} neutron/cm^2 for 60 years, the calculated shift in RT_{NDT} is 15.5°C for weld metal and 4.4°C for base metal and the drop in upper shelf energy is 13.53 N·m for welds and 10.79 N·m for base metal.

5.3.3.3 Fabrication Methods

The reactor pressure vessel is a vertical cylindrical pressure vessel of welded construction fabricated in accordance with ASME Code Section III, Class 1, requirements. All fabrication of the reactor pressure vessel was performed in accordance with GEH-approved drawings, fabrication procedures, and test procedures. The shell and vessel head were made from formed low-alloy steel plates or forgings and the flanges and nozzles from low-alloy steel forgings. Welding performed to join these vessel components was in accordance with procedures qualified to ASME Section III and IX requirements. Weld test samples were required for each procedure for major-vessel full-penetration welds.

Submerged arc and manual stick electrode welding processes were employed. Electroslag welding was not applied. Preheat and interpass temperatures employed for welding of low-alloy steel met or exceeded the requirements of ASME Section III, Appendix D. Post-weld heat treatment of 593°C minimum was applied to all low-alloy steel welds.

All previous BWR pressure vessels have employed similar fabrication methods. These vessels have operated for an extensive number of years and their service history is rated excellent.

5.3.3.4 Inspection Requirements

All plates, forgings, and bolting are 100% ultrasonically tested and surface examined by magnetic-particle methods or liquid-penetrant methods in accordance with ASME Code Section III. Welds on the reactor pressure vessel are examined in accordance with methods prescribed and meet the acceptance requirements specified by ASME Code Section III. In addition, the pressure-retaining welds are ultrasonically examined using acceptance standards which are required by ASME Code Section XI.

5.3.3.5 Shipment and Installation

The completed reactor vessel is given a thorough cleaning and examination prior to shipment. The vessel is tightly sealed for shipment to prevent entry of dirt or moisture. Preparations for shipment are in accordance with detailed written procedures.

On arrival at the reactor site, the reactor vessel is examined for evidence of any contamination as a result of damage to shipping covers. Measures are taken during installation to assure that vessel integrity is maintained; for example, access controls are applied to personnel entering the vessel, weather protection is provided, and periodic cleanings are performed.

5.3.3.6 Operating Conditions

Procedural controls on plant operation are implemented to hold thermal stresses within acceptable ranges and to meet the pressure/temperature limits of Subsection 5.3.2. The restrictions on coolant temperature are as follows:

(1) The average rate of change of reactor coolant temperature during normal heatup and cooldown shall not exceed 55°C during any one-hour period.

(2) If the coolant temperature difference between the dome (inferred from P_{sat}) and the bottom head drain exceeds 55°C, neither reactor power level nor recirculation pump flow shall be increased.

The limit regarding the normal rate of heatup and cooldown (Item 1) assures that the vessel closure, closure studs, vessel support skirt, CRD housing, and stub tube stresses and usage remain within acceptable limits. Vessel temperature limit on recirculating pump operation and power level increase restriction (Item 2) augments the Item 1 limit in further detail by assuring that the vessel bottom head region will not be warmed at an excessive rate caused by rapid sweep out of cold coolant in the vessel lower head region by recirculating pump operation or natural circulation (cold coolant can accumulate as a result of control drive inleakage and/or low recirculation flow rate during startup or hot standby).

These operational limits, when maintained, ensure that the stress limits within the reactor vessel and its components are within the thermal limits to which the vessel was designed for normal operating conditions. To maintain the integrity of the vessel in the event that these operational limits are exceeded, the reactor vessel has been designed to withstand a limited number of transients caused by operator error. Also, for abnormal operating conditions where safety systems or controls provide an automatic temperature and pressure response in the reactor vessel, the reactor vessel integrity is maintained, since the severest anticipated transients have been included in the design conditions. Therefore, it is concluded that the vessel integrity will be maintained during the most severe postulated transients, since all such transients are evaluated in the design of the reactor vessel.

5.3.3.7 Inservice Surveillance

Inservice inspection of the RPV will be in accordance with the requirements of ASME B&PV Code Section XI. The vessel will be examined once prior to startup to satisfy the preoperational requirements of IWB-2000 of ASME Code Section XI. Subsequent inservice inspection will monitor changes in the fracture toughness properties of ferritic materials in the reactor vessel beltline region resulting from exposure to neutron irradiation and thermal environment. Specimens of actual reactor beltline material will be exposed in the reactor vessel and periodically withdrawn for impact testing. Operating procedures will be modified in accordance with test results to assure adequate brittle-fracture control.

Material surveillance programs and inservice inspection programs are in accordance with applicable ASME Code requirements and provide assurance that brittle-fracture control and pressure vessel integrity will be maintained throughout the service lifetime of the reactor pressure vessel.

5.3.4 COL License Information

5.3.4.1 Fracture Toughness Data

Fracture toughness data based on the limiting reactor vessel materials will be provided (Subsection 5.3.1.5.1).

5.3.4.2 Materials and Surveillance Capsule

The following will be identified: (1) the specific materials in each surveillance capsule; (2) the capsule lead factors; (3)the withdrawal schedule for each surveillance capsule; (4) the neutron fluence to be received by each capsule at the time of its withdrawal; and (5) the vessel end-of-life peak neutron fluence (Subsection 5.3.1.6.4).

5.3.4.3 Plant-Specific Pressure-Temperature Information

The COL applicant will submit plant-specific calculations of RT_{NDT}, stress intensity factors, and pressure-temperature curves similar to those in Regulatory Guide 1.99 and SRP Section 5.3.2.

5.3.5 References

5.3-1 "An Analytical Study on Brittle Fracture of GE-BWR Vessel Subject to the Design Basis Accident" (NEDO-10029).

5.3-2 "Transient Pressure Rises Affecting Fracture Toughness Requirements for Boiling Water Reactors", January 1979 (NEDO-21778-A).

Table 5.3-1 Comparison of 40 Year Fluences

	BWR/6		ABWR
	218-624	238-748	
Peak Fluence (40y) (0.25t)	5.5E+18	4.3E+18	2.2E+17
Power (MWt)	2894	3579	3926
Bundles	624	748	872
Power Lvl (kW/L)	52.8	54.5	51.3
Vessel IR	276.86	302.26	353.06
Shroud OR (cm)	234.95	256.54	280.35
Water Gap (cm)	41.9	45.7	72.7
Neutron Reduction Factor for Water	0.007	0.0044	0.00042
Expected Fast Fluence based upon 218-624	5.5E+18	3.6E+18	3.3E+17

Table 5.3-2 Key Dimensions of RPV System Components and Acceptable Variations

Description	Dimension/ Elevation (Figure 5.3-2a)	Nominal Value (mm)	Acceptable Variation* (mm)
RPV inside diameter (Inside cladding)	A	7112.0	±51.0
RPV wall thickness in beltline (without cladding)	B	174.0	+20.0/–4.0
RPV bottom head inside invert. Elevation	C	0.0	Reference
RPV support skirt bottom, Elevation	D	3250.0	±75.0
Core plate support/Top of shroud middle flange, Elevation	E	4695.2	±15.0
Top guide support/Top of shroud top flange, Elevation	F	9351.2	±20.0
RPV stabilizer connection, Elevation	G	13,766.0	±20.0
Top of RPV flange, Elevation	H	17,703.0	±65.0
RHR SDC/CUW Outlet Nozzle, Elevation	J	10,921.0	±40.0
Shroud outside diameter	K	5600.7	±25.0
Shroud wall thickness	L	57.2	±10.0
Shroud support legs (Fig. 5.3-2b)	M x N	662.0 x 153.0	±20.0 for M ±10.0 for N
Control rod guide tube outside diameter	P	273.05	±5.0

* For Tier 1 (Design Certification Material, Document 25A5447) configuration check only. Variations within these as-built tolerances do not invalidate the plant safety analyses presented in Chapters 6 and 15.

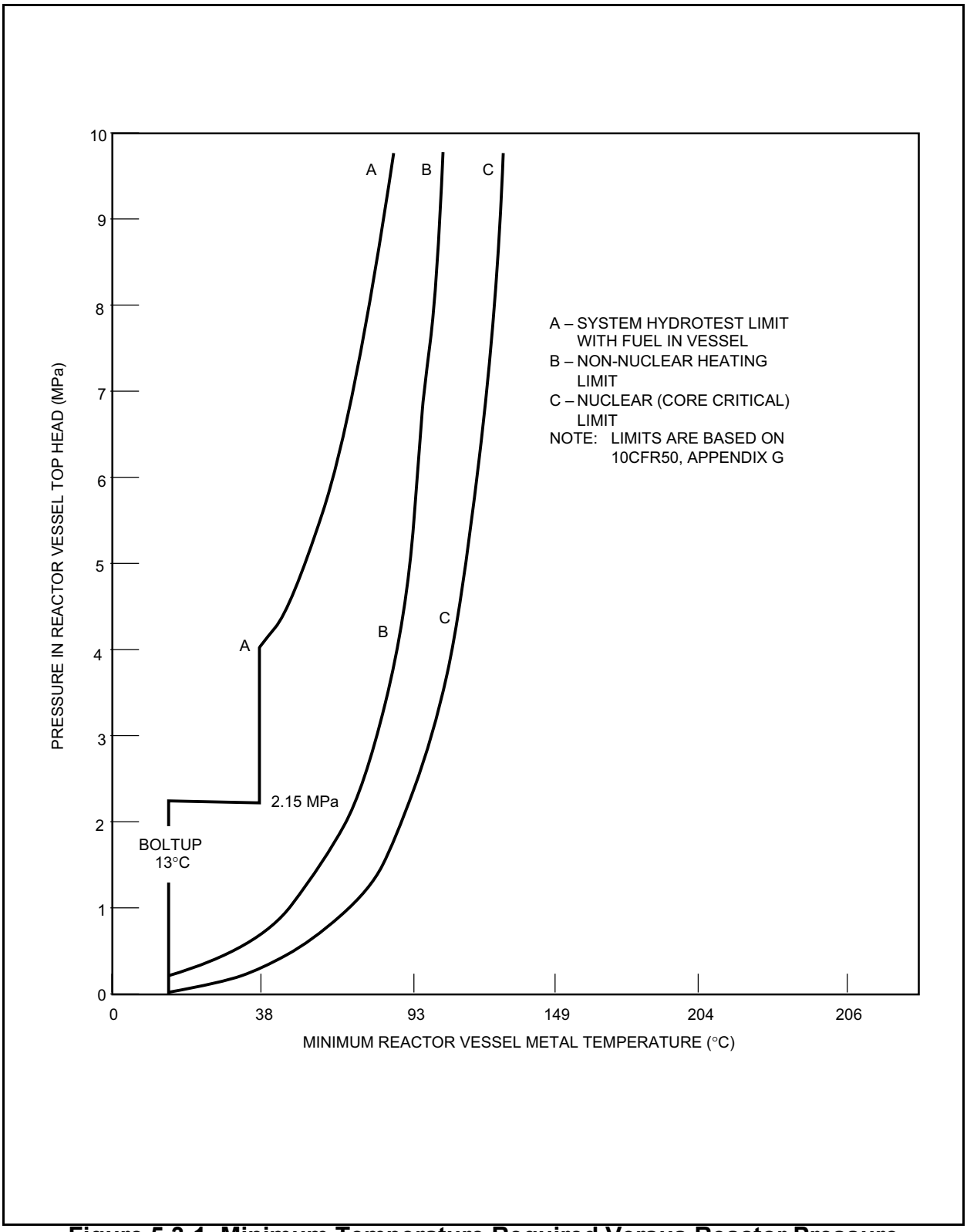

Figure 5.3-1 Minimum Temperature Required Versus Reactor Pressure

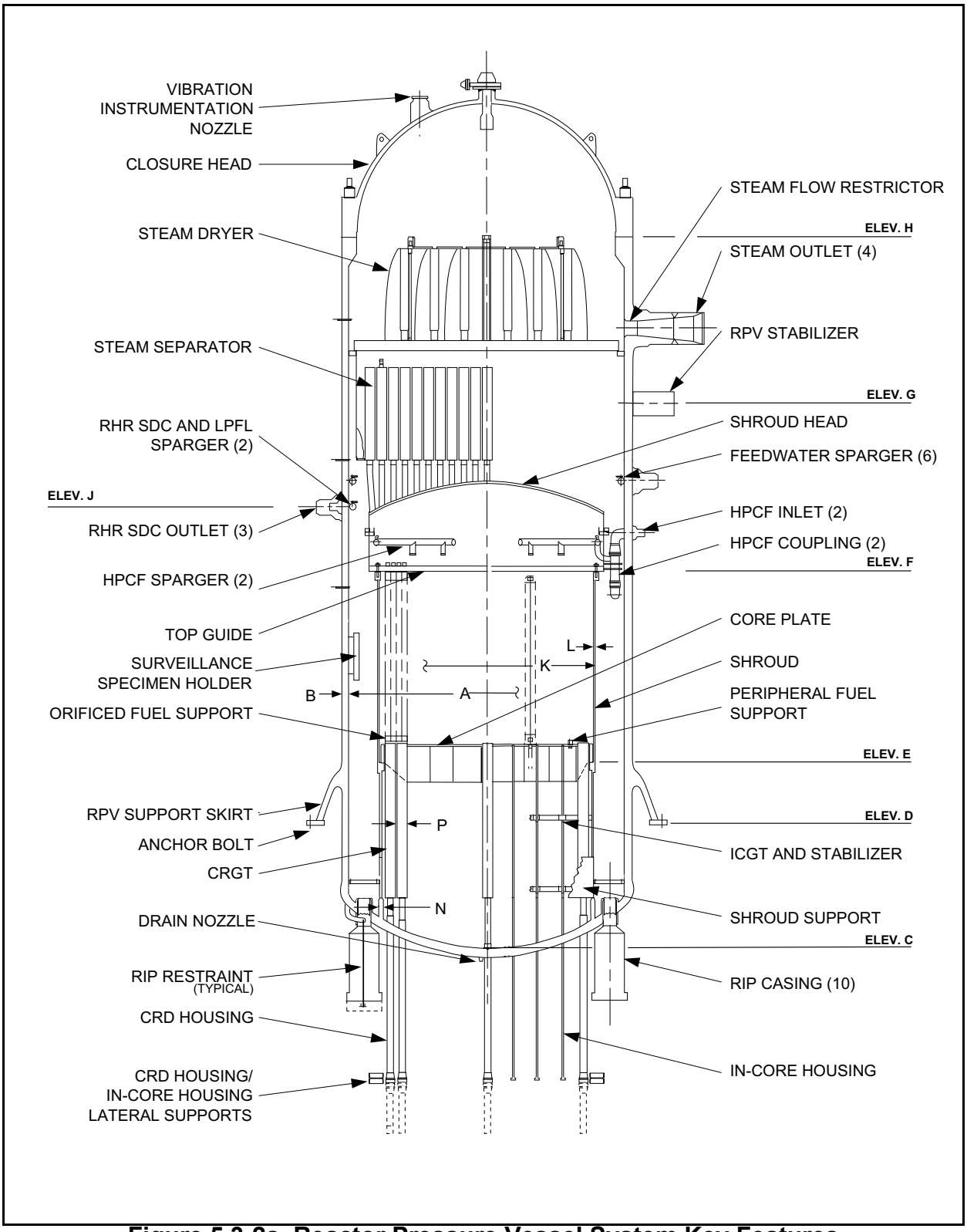

Figure 5.3-2a Reactor Pressure Vessel System Key Features

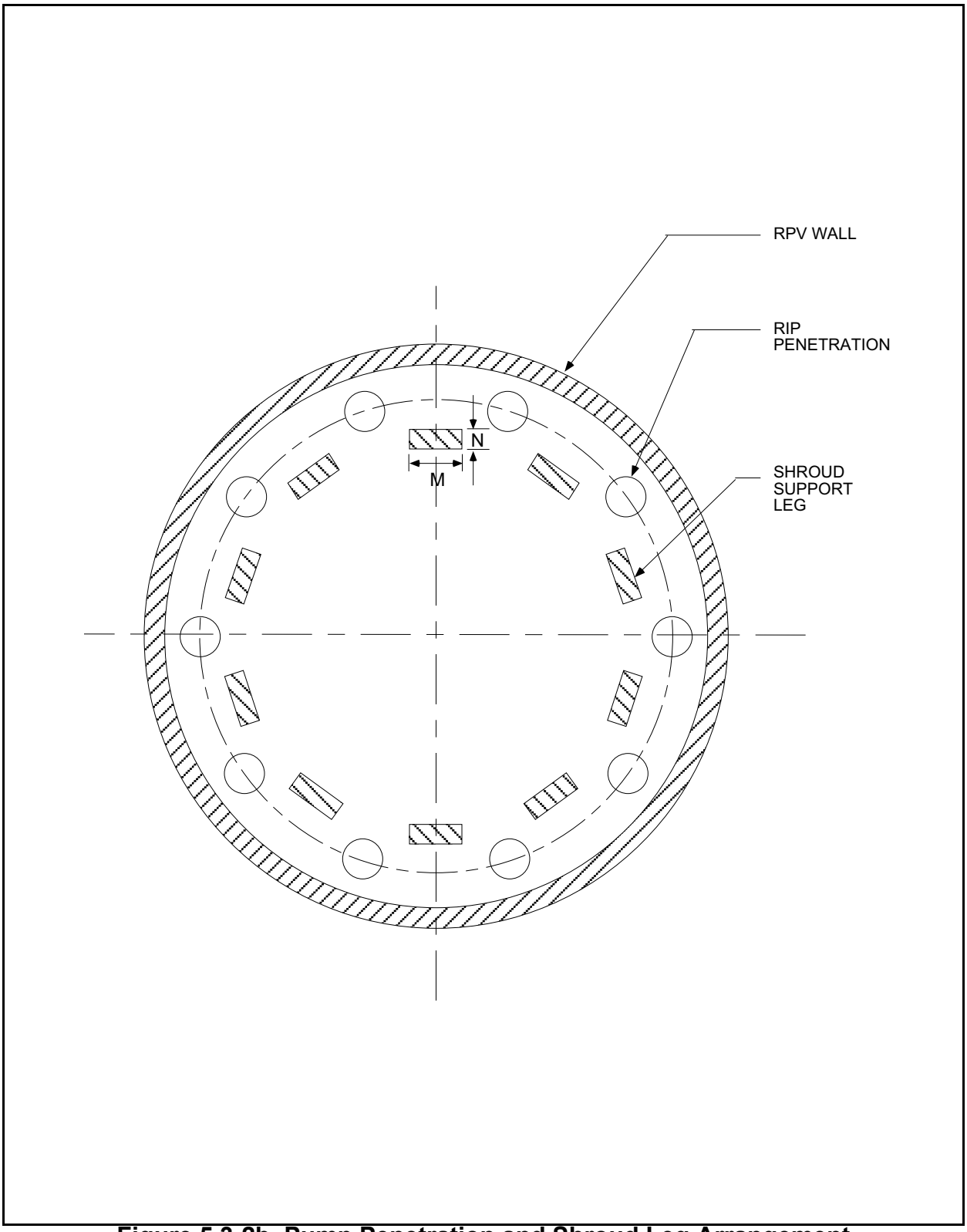

Figure 5.3-2b Pump Penetration and Shroud Leg Arrangement

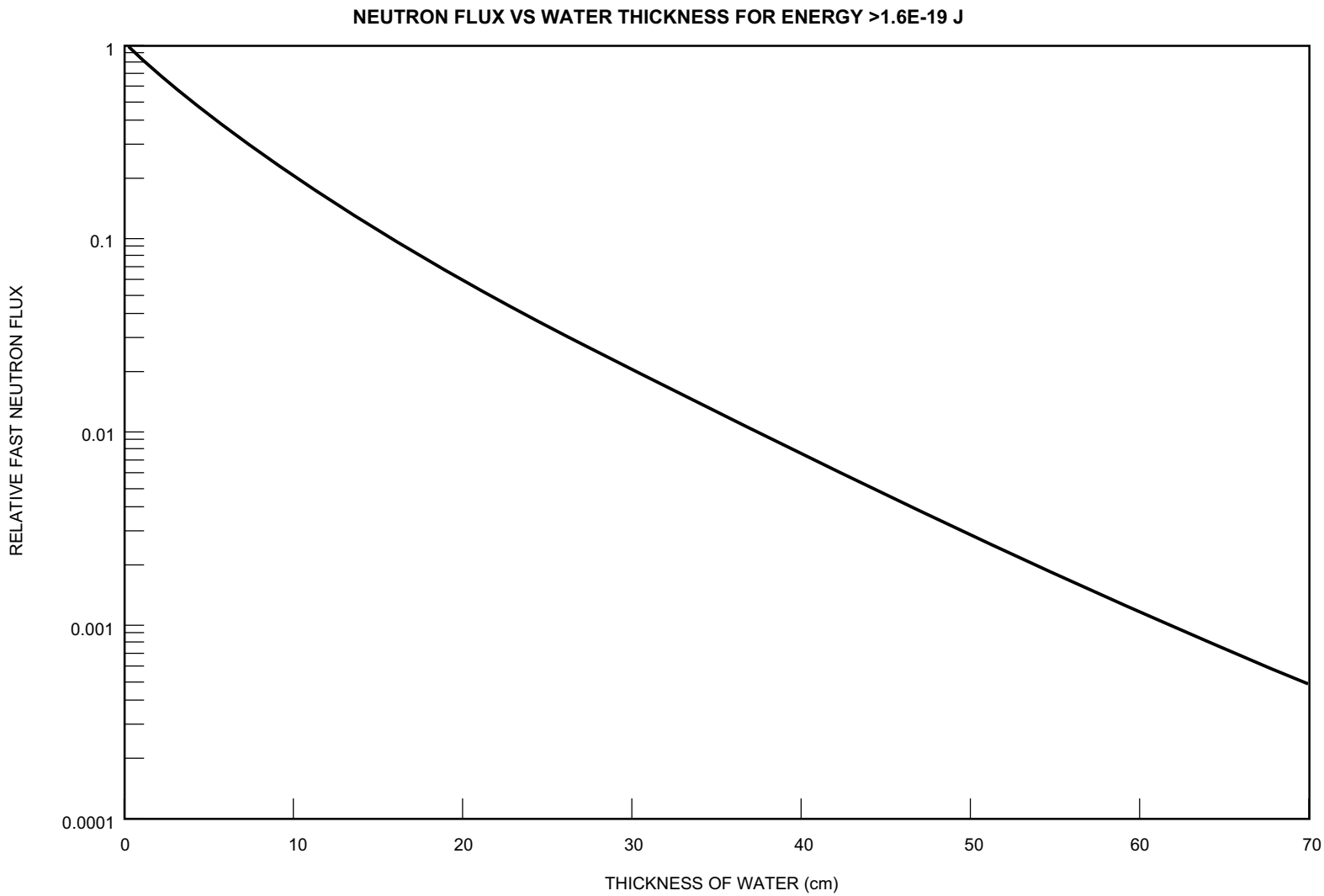

Figure 5.3-3 Fast Neutron Flux as Function of Water Thickness

5.4 Component and Subsystem Design

5.4.1 Reactor Recirculation System

5.4.1.1 Safety Design Bases

The Reactor Recirculation System (RRS) has been designed to meet the following safety design bases:

(1) An adequate fuel barrier thermal margin shall be assured during postulated transients.

(2) The system shall maintain pressure integrity during adverse combinations of loadings and forces occurring during abnormal, accident, and special event conditions.

5.4.1.2 Power Generation Design Bases

The RRS meets the following power generation design bases:

(1) The system shall provide sufficient flow to remove heat from the fuel.

(2) The system shall provide an automatic load following capability over the range of 70 to 100% rated power.

(3) System design shall minimize maintenance situations that would require core disassembly and fuel removal.

5.4.1.3 Description

The RRS features an arrangement of ten reactor coolant recirculation pump units commonly referred to as reactor internal pumps (RIPs). A cross section of a RIP is shown in Figure 5.4-1. Collectively, these provide forced circulation of the reactor coolant through the lower plenum of the reactor and up through the lower grid, the reactor core, steam separators, and back down the downcomer annulus (Figure 5.4-2). The recirculation flow rate is variable over a range—termed the flow control range—from minimum flow established by certain pump performance characteristics to above the maximum flow required to obtain rated reactor power as shown on Figure 5.4-3. Figure 5.4-3 shows typical RIP performance characteristics which have been used for steady state performance analysis. Regulation of reactor power output over an approximate power range (70% ≤ reactor power output ≤100% rated output), without need for moving control rods, is thus made possible by varying recirculation flow rate over the flow control range. The configuration of the RRS with 10 RIPs is shown on the RRS P&ID and Process Diagrams, (Figures 5.4-4 and 5.4-5, respectively). RRS design characteristics are presented in Table 5.4-1. Control of the reactor power through the flow control region is provided by the Recirculation Flow Control System (RFCS) as described in Section 7.7. The RFCS closely relates to the RRS in that it provides properly conditioned control and logic signals, which regulate the reactor coolant recirculation flow rate produced by the RRS under various steady-

state, transient, upset, and emergency modes of NSSS operation. The following three subsystems are designated as part of the RFCS (see Section 7.7 for details):

(1) Adjustable Speed Drive (ASD) Subsystem

(2) Recirculation Pump Trip (RPT) Subsystem

(3) Core Flow Measurement (CFM) Subsystem

In addition to the RIPs, several subsystems are included as part of the RRS to provide closely related, or closely supporting, functions to the RRS in composite or to the RIPs as individual components. These subsystems are as follows:

(1) Recirculation Motor Cooling (RMC) Subsystem

(2) Recirculation Motor Purge (RMP) Subsystem

(3) Recirculation Motor Inflatable Shaft Seal (RMISS) Subsystem

The RIPs, as well as each of these subsystems, are further described in later paragraphs.

The motor casing has a closure assembly, at its bottom-most end, termed a “motor cover”. The motor cover, in addition to its reactor pressure-boundary closure function, provides a foundation for the bearing assembly which holds the non-rotating bearing elements of the thrust bearings. The motor cover is sealed to the motor casing with a single, Flexitallic-type gasket and an O-ring. The recirc motor (RM) region surrounded by the inner surface of the motor casing and the inner surface of the motor cover, is termed the motor cavity.

The principal element of the stretch tube section is a thin-walled Inconel tube configured as a hollow bolt fitting around the pump shaft and within the pump nozzle. It has an external lip (bolt head) at its upper end and an external threaded section at its lower end. The stretch tube function is to achieve tight clamping of the internal pump diffuser to the gasketed, internal-mount end of the RPV pump nozzle, at the extremes of thermal transients and pump operating conditions. Clamping action is achieved by (1) capturing, with the stretch tube upper lip, a mating lip on the diffuser, and (2) a stretch tube nut threaded onto the stretch tube lower end where it projects into the upper region of the motor cavity. When the stretch tube is hydraulically pretensioned, the prescribed preload is exerted on the diffuser.

5.4.1.3.1 Recirculation Motor Cooling Subsystem

During RIP operation, heat is generated by the RM internals (windings and conductor electrical losses; viscous heating) and is also conducted from the vessel (RPV and primary coolant) to the motor cavity water and internals. Therefore, cooling is required for the RM.

These RM internals, including the water present in the motor cavity, are cooled by a circulating water process which cycles the water in the motor cavity out through the RMC Subsystem to a

recirculation motor heat exchanger (RMHX) and through return piping connections back to the RM. There is one RMHX per RIP located near the RM and within the reactor support pedestal. While the RIP is operating, flow circulation is powered principally by the RM auxiliary impeller shown in Figure 5.4-1. The RMHXs are positioned vertically such that should the RM stop during reactor operation, natural circulation through the RMC Subsystem piping will occur at flow rates sufficient to limit the RM temperature to acceptable values.

Heat pickup by the RMC Subsystem process coolant is rejected via the RMHX to the Reactor Building Cooling Water System as shown on Figure 5.4-4.

The RMHX is a vertically-oriented, shell-and-tube U-tube heat exchanger with a bottom water box, as shown schematically on Figure 5.4-4. Principal approximate sizing parameters feature a carbon steel shell outside diameter of approximately 400 mm and approximately 2700 mm length, 8.62 MPaG design pressure and 302°C design temperature. Tubes are stainless steel material designed for external pressure loading. Shell tube sheet and water box material is carbon steel. The RMHX stands taller than the RM motor casing, but the bottoms of each are located approximately at the same elevation. RMC Subsystem primary coolant from the RIP motor cavity flows outbound from a nozzle near the top of the motor casing, and through 63A stainless steel piping, which courses across and upward to the RMHX primary coolant inlet nozzle located near the top of the RMHX shell. This RMC flow proceeds downward, under the combined action of driving pressure head developed (when the RIP is running) by the RM auxiliary impeller and by buoyancy head developed by temperature (density) differences existing over the vertical closed-loop path lengths. In moving downward through the shell, this primary coolant sweeps back and fourth across the tube bundles guided by horizontal flow baffle/tube-support plates. Flow exits from the shell through a nozzle located just above the tube sheet and crosses, via 65A piping, directly back to the RIP motor casing on a piping run which is arranged primarily in a horizontal plane. Upon entering the RM casing, this primary coolant is drawn into the suction region of the RM auxiliary impeller, where it is then driven upward through the RM to begin another circuit around this RM-RMHX-RM flow loop.

5.4.1.3.2 Recirculation Motor Purge Subsystem

RIP maintenance radiation doses are minimized by preventing the buildup of reactor primary coolant impurities on RM components. Such prevention is provided by the recirculation motor purge (RMP) Subsystem, which supplies each RIP a flow of clean water to an RM shaft-stretch tube annular region located just above the RM upper journal bearing.

The Control Rod Drive (CRD) System is the source for pure water supply to the RMP Subsystem as shown on Figure 5.4-4. CRD water supply pressure is approximately 15.30 MPaG, and will range in temperature from just a few degrees above condensate storage tank temperature to a high temperature of about 60°C. At the connection from the RCS, the RMP Subsystem controls the 10 RIP purge flow to values shown for position 8 on Figure 5.4-5.

RMP flow then passes into a pipe header, outside the drywell wall, where the flow becomes distributed to an individual pipe to each RIP. Between the header and the containment pipe penetration, on each line a manual flow control valve is provided and an inline flow indicating switch. This permits the plant operator to regulate the RMP flow to each RIP within the range specified for position 7 on Figure 5.4-5.

The lower-bound flow rate value assures that a positive upward moving flow, around the pump shaft and into the reactor, will always be maintained. This action thus precludes contaminated reactor water from entering the motor cavity and, in turn, the RMC Subsystem piping and equipment. The upper-bound flow rate value is set to prevent conditions which might produce rapid temperature cycling (and thus produce high cycle fatigue) on the pump shaft.

In addition to the above bounds on RMP Subsystem flow rate into each RIP, upper and lower temperature bounds also apply. An upper temperature limit to the RMP water, at the inlet to the RIP, of 70°C has been established to preclude deterioration of the inflatable seal (resiliency), which could occur under prolonged high temperature operation. Since the maximum supply water temperature from the CRD System to the RMP subsystem interface is 60°C, and since fluid at this high temperature would experience only heat losses along the pipe run to the RIP, the RMP Subsystem design inherently assures that this upper temperature bound will not be exceeded.

Lower temperature bounds also apply, and the operative lower temperature limit depends on the reactor operating state. These lower temperature limits for RMP water at the entrance to the RIP are (1) 30°C whenever the reactor primary coolant water temperature is above 100°C; and (2) 10°C whenever the reactor primary coolant water temperature is 100°C or below. These limits are set to preclude excessive temperature cycling on the pump shaft in the region where the RMP water first encounters reactor primary coolant (i.e., the region from the top of the stretch tube to the joint with the impeller at the top of the pump shaft). The RMP water supply from the CRD system normally originates from the main demineralized condensate. The CRD system temperature ordinarily will be in the 40 to 60°C range at the point of delivery to the RMP Subsystem, as shown on Figure 5.4-5. Since the main run of RMP piping passes through the top of the lower drywell equipment airlock, across the drywell, and up to the RIPs, and since the flow rate is so low, heat pickup from drywell atmosphere will ensure that the temperature at the entrance to the RIPs will be above the required lower limit. Heaters for RMP Subsystem flow will not be required. This conclusion is consistent with European RIP experience, and is confirmed by detailed engineering analyses.

It is expected that a daily check by the plant operator, to confirm that flow rate to each RIP is within the required bounds, will be the only attention needed for this subsystem. Rarely will it be required for the operator to adjust the manual flow control valve.

Instrumentation is provided to monitor RMSP Subsystem performance and provide warning alarms for individual RIP high or low flow conditions.

5.4.1.3.3 Recirculation Motor Inflatable Shaft Seal Subsystem

An inflatable seal is designated as a secondary seal. A primary seal, preventing downflow of reactor water into the motor cavity, is provided by contact faces on the pump shaft and stretch tube. Ordinarily separated, this primary seal becomes functional when the RM and, in turn, the pump shaft is lowered during the RIP dismantling sequence.

The inflatable seal made from elastomeric material and housed inside the upper (neck) region of the motor cavity (below the stretch tube lower end) is provided. When activated, this seal functions to prevent downflow of reactor water from the RPV into the motor cavity. This allows the motor cavity to be drained and the RM to be removed from the motor casing for repair or maintenance work. The RMISS is the subsystem which enables manually activating the seal when the reactor is shutdown and the motor is stopped. The RMISS applies pressurizing water to the side of the seal closest to the motor casing inside surface. Such pressurization causes the seal member to inflate and press tightly against the pump shaft and motor casing, producing the sealing action. A pressure equalizing line is connected on the line which activates the seal and down to the motor casing drain takeoff point. This pressure equalizing line is open for normal operation of the RIP. The differential pressure that is produced by RIP auxiliary impeller action when the RIP is operating ensures that a small outward pressure assisting seal retraction will be present to assure that contact does not take place between the rotating pump shaft and the inflatable seal.

5.4.1.4 Operation

The RRS is required to operate during startup, normal operation, and hot standby. It is not required to operate during shutdown cooling. During various moderately frequent transient and certain infrequent transients, various RIP operating modes will be required, such as: (1) RIPs runback from loss of one reactor feed pump (2) trip of selected RIPs from current reactor protection conditions; or runback-to-30% speed and subsequent trip. These control actions are all produced through control actions of the RFCS, described in Subsection 7.7.1.3.

A description of system/component primary operational requirements is given below.

The RIPs are required to operate in the modes directed by the RFCS, without sustaining damage and without experiencing wear under normal operations—over the time period remaining until their normal scheduled removal from the reactor for refurbishment. The intended refurbishment interval is five years. An average of two of the ten RIPs is scheduled for removal for refurbishment, with these operations to be performed during the scheduled refueling outage.

The requirements on the RIPs apply equally to the RRS Subsystems. For the conditions when the RIPs are not required to operate, pressure integrity of the RCPB must be maintained.

The range of steady-state conditions over which RIP operation is required is indicated on the process diagram for the Reactor Recirculation System (Figure 5.4-5). Capabilities for the system with one RIP out of service are listed; this diagram states that the RRS shall provide

rated core flow with one RIP out of service. With seven or eight RIPs operating, plant operation is possible at reduced power.

The RMC Subsystem, including the RMHXs, is required to operate whenever the RIPs are operating. Additionally, this subsystem must function in the period following trip of any RIPs until such time as temperature of reactor primary coolant has been brought below the Mode D value listed on the RRS process diagram (Figure 5.4-5) representing the normal exit temperature of RMC Subsystem fluid leaving the motor cavity.

Moreover, the RMC Subsystem is required to function throughout all events in which electric power to the RIPs is lost. Loops A and B of the RCW, which are cooling water sources to the RMC Subsystem, are required to be immediately reconnected during this power event.

5.4.1.5 Safety Evaluation

RRS malfunctions that pose threats of damage to the fuel barrier are described and evaluated in Chapter 15, where it is shown that none of the malfunctions result in fuel damage. The recirculation system has sufficient flow coastdown characteristics to maintain fuel thermal margins during abnormal operational transients.

Piping and pump design pressures for the RRS are based on peak steam pressure in the reactor dome, appropriate pump head allowances, and the elevation head above the lowest point in the recirculation pump. Piping and related equipment pressure parts are chosen in accordance with applicable codes. Use of the listed code design criteria assures that a system designed, built, and operated within design limits has an extremely low probability of failure caused by any known failure mechanism. Purchase specifications require that integrity of the pump motor case be maintained through all normal and upset transients. The design of the motor bearings is required to be such that dynamic load capability at rated operating conditions is not exceeded during the design basis earthquake.

Pump overspeed will not occur during the course of a loss-of-coolant accident (LOCA) due to a anti-rotation device (ARD) which is located at the bottom of the RIP motor and prevents a backward rotation of the RIP. The ARD also prevents backward rotation during normal plant operation when one RIP is stopped and the other RIPs are operating. The ARD is designed to successfully withstand ≤ 7551 N·m reverse torque and prevent backward RIP rotation.

Each RIP is contained in a pressure boundary housing that is attached to the RPV by a weld to a RIP nozzle located in the RPV bottom head (Figure 5.4-1). Mitigation of a hypothetical failure of the weld is assured by the following:

(1) The weld is bridged by the stretch tube which is, in principle, a long hollow bolt. The normal function of the stretch tube is to hold the pump diffuser in place. In the event of weld failure, the stretch tube is the first member to resist ejection of the housing. The stresses in the stretch tube, resulting from a guillotine failure of the weld, would

be less than the minimum specified ultimate strength. Thus, the stretch tube may be reasonably considered to mitigate the event.

(2) In the event that the stretch tube also breaks, the RIP assembly will move downward a small amount until the impeller backseats. The backseat feature is used during RIP motor servicing to prevent leakage of reactor coolant when the motor cover is removed. In the event of weld and stretch tube failure, the backseating will result in the RIP shaft restraining the ejection load, with the load path being from the backseat through the shaft to the thrust bearing. The weak link in this path is the bearing to shaft bolt which is loaded to less than its ultimate strength by the ejection event and hence would not be expected to fail.

(3) If the weld fails, the stretch tube fails and the bearing to shaft bolt fails, and the shaft backseat fails, then the vertical restraints come in play. These restraints are stainless steel rods which connect lugs on the vessel to lugs on the motor cover. The restraints are designed specifically to preclude motor housing shootout and are designed to the same criteria used for pipe restraints.

A Failure Modes and Effects Analysis (FMEA) of the RIP is presented in Appendix 15B.

During normal RIP maintenance the following sequence is performed:

(1) The RIP motor, lower cover and impeller shaft are unbolted and lowered until the shaft backseats on the top of the stretch tube shown in Figure 5.4-1.

(2) The secondary inflatable seal is pressurized and the motor housing is drained.

(3) The motor and cover are removed from the motor housing.

(4) A maintenance cover is bolted to the bottom of the motor housing and the housing is pressurized with water until equilibrium with the RPV static head pressure is reached. The secondary seal is then depressurized.

(5) After it is confirmed that the bottom cover is properly installed, the impeller-shaft is lifted out of the RPV and a maintenance plug is installed on top of the stretch tube. During the shaft lifting or maintenance plug removal step, personnel will monitor visually for leakage down out of the housing. The requirement for the COL applicant administrative procedure is described in Subsection 5.4.15.4.

The refueling machine auxiliary hoist, used for handling the impeller-shaft, is equipped with a load cell interlock which interrupts the hoisting power if the load exceeds the setpoint. The setpoint is less than the sum of the impeller-shaft weight and the hydrostatic head on the impeller.

The maintenance RIP diffuser plug is designed with a break-away lifting lug so it can not be removed unless the RIP motor housing permanent or maintenance bottom cover is bolted in place and the housing pressure is in equilibrium with the RPV static pressure.

(6) With the maintenance RIP diffuser plug in place, the motor housing is again drained and the maintenance bottom cover is removed. With the impeller shaft removed, maintenance on the secondary seal and stretch tube inspection is performed.

(7) The bottom maintenance cover is again installed and the housing refilled and pressurized.

(8) The maintenance top plug is removed and reassembly of the impeller-shaft-motor is completed in reverse order of 1 - 6 above including housing draining and filling.

In summary, the auxiliary hoist load cell prevents lifting the impeller if a bottom cover is not installed. The break-away lifting lug on the maintenance plug prevents lifting the plug if the bottom cover is not installed. In addition, undervessel leakage monitoring is required during these operations. Therefore, the possibility of an inadvertent RPV drain down is extremely remote.

5.4.1.6 Inspection and Testing

Quality control methods are used during fabrication and assembly of the RRS to assure that design specifications are met (inspection and testing procedures are described in Chapter 3). The RRS is thoroughly cleaned and flushed before fuel is loaded initially.

During the pre-operational test program, the RRS is hydrostatically tested at 125% reactor vessel design pressure. Preoperational tests on the RRS also include checking operation of the pumps and flow control system, as discussed in Chapter 14.

During the startup test program, horizontal and vertical motion of the RIP motor casing is observed. RIP motor acoustic monitoring is provided.

Nuclear system responses to recirculation pump trips at rated temperatures and pressure are evaluated during the startup tests, and plant power response to recirculation flow control is determined.

5.4.2 Steam Generators (PWR)

Not applicable to this BWR.

5.4.3 Reactor Coolant Piping

Since the RIPs are located inside the RPV, there is no major external reactor coolant piping connected to the ABWR pressure vessel.

5.4.4 Main Steamline Flow Restrictors

5.4.4.1 Safety Design Bases

The main steamline flow restrictors were designed to:

(1) Limit the loss of coolant from the reactor vessel following a steamline rupture outside the containment to the extent that the reactor vessel water level remains high enough to provide cooling within the time required to close the main steamline isolation valves.

(2) Limit the maximum pressure differences expected across the reactor internal components following complete severance of a main steamline.

(3) Limit the amount of radiological release outside of the drywell prior to MSIV closure.

(4) Provide trip signals for MSIV closure.

5.4.4.2 Power Generation Design Basis

The main steamline flow restrictors were designed to provide signals for feedwater flow control and steam flow indication.

5.4.4.3 Description

A main steamline flow restrictor (Figure 5.4-6) is provided for each of the four main steamlines by giving the inside bore of each RPV steam outlet nozzle the shape of a flow restricting venturi.

The restrictor limits the coolant blowdown rate from the reactor vessel in the event that a main steamline break occurs outside the containment to a (choke) flow rate equal to or less than 200% of rated steam flow at 7.07 MPaG upstream pressure. The flow restrictor is designed and fabricated in accordance with ASME Code, Fluid Meters.

The flow restrictor has no moving parts. Its mechanical structure can withstand the velocities and forces associated with a main steamline break. The maximum differential pressure between inside and outside of the vessel is conservatively assumed to be 9.48 MPaG, the reactor vessel ASME Code limit pressure.

The venturi throat diameter is not greater than 355 mm. The ratio of venturi throat diameter to steamline inside diameter of approximately 0.5 results in a maximum pressure differential (unrecovered pressure) of about 0.069 MPaG at 100% of rated flow. This design limits the steam flow in a severed line to less than 200% rated flow, yet it results in negligible increase in steam moisture content during normal operation. The restrictor is also used to measure steam flow to initiate closure of the MSIVs when the steam flow exceeds preselected operational

limits. The vessel dome pressure and the venturi throat pressure are used as the high and low pressure sensing locations.

5.4.4.4 Safety Evaluation

In the event a main steamline should break outside the containment, the critical flow phenomenon would restrict the steam flow rate in the venturi throat to 200% of the rated value. Prior to isolation valve closure, the total coolant losses from the vessel are not sufficient to cause core uncovering, and the core is thus adequately cooled at all times.

Analysis of the steamline rupture accident (Subsection 15.6.4) shows that the core remains covered with water and that the amount of radioactive materials released to the environs through the main steamline break does not exceed the guideline values of published regulations.

The steam flow restrictor is exposed to steam of about 1/10% moisture flowing at velocities of 45 m/s (steam piping ID) to 180 m/s (steam restrictor throat). The flow restrictor is Type 308 weld overlay clad. This is similar to the Type 304 cast stainless steel used in previous flow restrictors. It has excellent resistance to erosion/corrosion in a high velocity steam atmosphere. The excellent performance of stainless steel in high velocity steam appears to be due to its resistance to corrosion. A protective surface film forms on the stainless steel which prevents any surface attack, and this film is not removed by the steam.

Hardness has no significant effect on erosion/corrosion. For example, hardened carbon steel or alloy steel will erode rapidly in applications where soft stainless steel is unaffected.

Surface finish has a minor effect on erosion/corrosion. If very rough surfaces are exposed, the protruding ridges or points will erode more rapidly than a smooth surface. Experience shows that a machined or a ground surface is sufficiently smooth and that no detrimental erosion will occur.

5.4.4.5 Inspection and Testing

Because the flow restrictor forms a permanent part of the RPV steam outlet nozzle and has no moving components, no testing program beyond the RPV inservice inspection is planned. Very slow erosion, which occurs with time, has been accounted for in the ASME Section III design analysis. Stainless steel resistance to erosion has been substantiated by turbine inspections at the Dresden Unit 1 facility. These inspections have revealed no noticeable effects from erosion on the stainless steel nozzle partitions. The Dresden inlet velocities are about 100 m/s and the exit velocities are 200 to 300 m/s. However, calculations show that, even if the erosion rates are as high as 0.1 mm per year, after 60 years of operation, the increase in restrictor-choked flow rate would be no more than 7.5%. A 7.5% increase in the radiological dose calculated for the postulated main steamline break accident is insignificant.

5.4.5 Main Steamline Isolation System

5.4.5.1 Safety Design Bases

The main steamline isolation valves, individually or collectively, shall:

(1) Close the main steamlines within the time established by DBA analysis to limit the release of reactor coolant.

(2) Close the main steamlines slowly enough that simultaneous closure of all steamlines will not induce transients that exceed the nuclear system design limits.

(3) Close the main steamline when required despite single failure in either valve or in the associated controls to provide a high level of reliability for the safety function.

(4) Use pneumatic (N_2 or air) pressure and/or spring force as the motive force to close the redundant isolation valves in the individual steamlines.

(5) Use local stored energy (pneumatic pressure and/or springs) to close at least one isolation valve in each steam pipeline without relying on the continuity of any variety of electrical power to furnish the motive force to achieve closure.

(6) Be able to close the steamlines, either during or after seismic loadings, to assure isolation if the nuclear system is breached.

(7) Have the capability for testing during normal operating conditions to demonstrate that the valves will function.

5.4.5.2 Description

Two isolation valves are welded in a horizontal run of each of the four main steam pipes; one valve is as close as possible to the inside of the drywell, and the other is just outside the containment.

Figure 5.4-7 shows a main steamline isolation valve (MSIV). Each MSIV is a Y-pattern, globe valve. Rated steam flow through each valve is 1.918 x 10^6 kg/h. The main disc or poppet is attached to the lower end of the stem. Normal steam flow tends to close the valve, and higher inlet pressure tends to hold the valve closed. The bottom end of the valve stem closes a small pressure balancing hole in the poppet. When the hole is open, it acts as a pilot valve to relieve differential pressure forces on the poppet. Valve stem travel is sufficient to give flow areas past the wide open poppet greater than the seat port area. The poppet travels approximately 90% of the valve stem travel to close the main steam port area; approximately the last 10% of the valve stem travel closes the pilot valve. The air cylinder actuator can open the poppet with a maximum differential pressure of1.38 MPaG across the isolation valve in a direction that tends to hold the valve closed.

A Y-pattern valve permits the inlet and outlet passages to be streamlined; this minimizes pressure drop during normal steam flow and helps prevent debris blockage.

The valve stem penetrates the valve bonnet through a stuffing box that has two sets of replaceable packing. A lantern ring and leakoff drain are located between the two sets of packing.

Attached to the upper end of the stem is an air cylinder that opens and closes the valve and a hydraulic dashpot that controls its speed. The speed is adjusted by a valve in the hydraulic return line bypassing the dashpot piston.

Valve quick-closing speed is 3-4.5 seconds when N_2 or air is admitted to the upper piston compartment. The valve can be test closed with a 45-60 second slow closing speed by admitting N_2 or air to both the upper and lower piston compartments.

The pneumatic cylinder is supported on the valve bonnet by actuator support and spring guide shafts. Helical springs around the spring guide shafts close the valve if gas pressure is not available. The motion of the spring seat member actuates switches in the near-open/near-closed valve positions.

The valve is operated by pneumatic pressure and by the action of compressed springs. The control unit is attached to the gas cylinder. This unit contains three types of control valves that open and close the main valve and exercise it at slow speed. Remote manual switches in the control room enable the operator to operate the valves.

Operating gas is supplied to the valves from the plant N_2 or instrument air system. A pneumatic accumulator between the control valve and a check valve provides backup operating gas.

Each valve is designed to accommodate saturated steam at plant operating conditions with a moisture content of approximately 0.3% an oxygen content of 30 ppm, and a hydrogen content of 4 ppm. The valves are furnished in conformance with a design pressure and temperature rating in excess of plant operating conditions to accommodate plant overpressure conditions.

In the worst case, if the main steamline should rupture downstream of the valve, steam flow would quickly increase to 200% of rated flow. Further increase is prevented by the venturi flow restrictor.

During approximately the first 75% of closing, the valve has little effect on flow reduction, because the flow is choked by the venturi restrictor. After the valve is approximately 75% closed, flow is reduced as a function of the valve area versus travel characteristic.

The design objective for the valve is a minimum of 60 years service at the specified operating conditions. Operating cycles are estimated to be 1500 in 60 years and 3750 exercise cycles in 60 years.

In addition to minimum wall thickness required by applicable codes, a corrosion allowance is added to provide for 60 years service.

Design specification ambient conditions for normal plant operation are 57°C normal temperature and 60% humidity in a radiation field of 2.02 Gy/h neutron plus gamma, continuous for design life. The inside valves are not continuously exposed to maximum conditions, particularly during reactor shutdown, and valves outside the primary containment and shielding are in ambient conditions that are considerably less severe.

The MSIVs are designed to close under accident environmental conditions of 171°C for one hour at drywell design pressure. In addition, they are designed to remain closed under the following post-accident environment conditions:

(1) 171°C for an additional 2 hours at drywell pressure of 0.31 MPaG

(2) 160°C for an additional 3 hours at drywell design pressure of 0.31 MPaG

(3) 121°C for an additional 18 hours at 0.18 MPaG maximum

(4) 93°C for an additional 99 days at 0.14 MPaG

To sufficiently resist the response motion from the safe shutdown earthquake (SSE), the MSIV installations are designed as Seismic Category I equipment. The valve assembly is manufactured to withstand the SSE forces applied at the mass center of the valve with the valve located in a horizontal run of pipe. The stresses caused by horizontal and vertical seismic forces are assumed to act simultaneously. The stresses caused by seismic loads are combined with the stresses caused by other live and dead loads including the operating loads. The allowable stress or this combination of loads is based on a percentage of the allowable yield stress for the material. The parts of the MSIVs that constitute a process fluid pressure boundary are designed, fabricated, inspected, and tested as required by ASME Code Section III.

5.4.5.3 Safety Evaluation

In a direct cycle nuclear power plant, the reactor steam goes to the turbine and to other equipment outside the containment. Radioactive materials in the steam are released to the environs through process openings in the steam system or escape from accidental openings. A large break in the steam system can drain the water from the reactor vessel faster than it is replaced by feedwater.

The analysis of a complete, sudden steamline break outside the containment is described in Subsection 15.6.4. The analysis shows that the fuel barrier is protected against loss of cooling if MSIV closure is within specified limits, including instrumentation delay to initiate valve closure after the break. The calculated radiological effects of the radioactive material assumed to be released with the steam are shown to be well within the guideline values for such an accident.

The shortest closing time (approximately 3 seconds) of the MSIVs is also shown to be satisfactory. The switches on the valves initiate reactor scram when specific conditions (extent of valve closure, number of pipe lines included, and reactor power level) are exceeded (Subsection 7.2.1). The pressure rise in the system from stored and decay heat may cause the nuclear SRVs to open briefly, but the rise in fuel cladding temperature will be insignificant. No fuel damage results.

The ability of this Y-pattern globe valve to close in a few seconds after a steamline break, under conditions of high pressure differentials and fluid flows with fluid mixtures ranging from mostly steam to mostly water, has been demonstrated in a series of dynamic tests. A full-size, 500A valve was tested in a range of steam/water blowdown conditions simulating postulated accident conditions (Reference 5.4-1).

The following specified hydrostatic, leakage, and stroking tests, as a minimum, are performed by the valve manufacturer in shop tests:

(1) To verify its capability to close at settings between 3 and 4.5 s (response time for full closure is set prior to plant operation at 3.0 s minimum, 4.5 s maximum), each valve is tested at rated pressure (6.97 MPaG) and no flow.

(2) Leakage is measured with the valve seated. The specified maximum seat leakage, using cold water at design pressure, is 0.079 cm^3/h/mm of nominal valve size. In addition, an air seat leakage test is conducted using 0.28 MPaG pressure upstream. Maximum permissible leakage is 0.029 cm^3/h/mm of nominal valve size.

(3) Each valve is hydrostatically tested in accordance with the requirements of the applicable edition and addenda of the ASME Code. During valve fabrication, extensive nondestructive tests and examinations are conducted. Tests include radiographic, liquid penetrant, or magnetic-particle examinations of casting, forgings, welds, hardfacings, and bolts.

After the valves are installed in the nuclear system, each valve is tested as discussed in Chapter 14.

Two isolation valves provide redundancy in each steamline, so either can perform the isolation function and either can be tested for leakage after the other is closed. The inside valve, the outside valve, and the respective control systems are separated physically.

The isolation valve is analyzed and tested for earthquake loading. The loading caused by the specified earthquake loading is required to be within allowable stress limits and with no malfunctions that would prevent the valve from closing as required.

Electrical equipment that is associated with the isolation valves and operated in an accident environment is limited to the wiring, solenoid valves, and position switches on the isolation

valves. The expected pressure and temperature transients following an accident are discussed in Chapter 15.

5.4.5.4 Inspection and Testing

The MSIVs can be functionally tested for operability during plant operation and refueling outages. The test provisions are listed below. During refueling outage, the MSIVs can be functionally tested, leak-tested, and visually inspected.

The MSIVs can be tested and exercised individually to the 90% open position and full closed position in the fast closing mode. The valves can also be test closed within 45 to 60 s in the slow closing mode.

Leakage from the valve stem packing is collected and measured by the drywell drain system. During shutdown, while the nuclear system is pressurized, the leak rate through the inner valve stem packing can be measured by collecting and timing the leakage.

The leak through the pipeline valve seats can be measured accurately during shutdown by the following suggested procedure:

(1) With the reactor at approximately 52°C and normal water level and decay heat being removed by the RHR System in the shutdown cooling mode, all MSIVs are closed, utilizing both spring force and air pressure on the operating cylinder.

(2) Nitrogen is introduced into the reactor vessel above normal water level and into the connecting main steamlines and pressure is raised to 0.14 to 0.21 MPaG. An alternate means of pressurizing the upstream side of the inside isolation valve is to utilize a steamline plug capable of accepting the 0.14 to 0.21 MPaG pressure acting in a direction opposite the hydrostatic pressure of the fully flooded reactor vessel.

(3) A pressure gauge and flow meter are connected to the test tap between each set of MSIVs. Pressure is held below 6.86 kPaG, and flow out of the space between each set of valves is measured to establish the leak rate of the inside isolation valve.

(4) To leak check the outer isolation valve, the reactor and connecting steamlines are flooded to a water level that gives a hydrostatic head at the inlet to the inner isolation valves slightly higher than the pneumatic test pressure to be applied between the valves. This assures essentially zero leakage through the inner valves. If necessary to achieve the desired water pressure at the inlet to the inner isolation valves, gas from a suitable pneumatic supply is introduced into the reactor vessel top head. Nitrogen pressure (0.14 to 0.21 MPaG) is then applied to the space between the isolation valves. The stem packing is checked for leak tightness. Once any detectable stem packing leakage to the drain system has been accounted for, the seat leakage test is conducted by shutting off the pressurizing gas and observing any pressure decay. The volume between the closed valves is accurately known. Corrections for temperature

variation during the test period are made, if necessary, to obtain the required accuracy. Pressure and temperature are recorded over a long enough period to obtain meaningful data. An alternate means of leak testing the outer isolation valve is to utilize the previously noted steamline plug and to determine leakage by pressure decay or by inflow of the test medium to maintain the specific test pressure.

During pre-startup tests following an extensive shutdown, the valves will receive the same hydro tests that are imposed on the primary system.

Such a test and leakage measurement program ensures that the valves are operating correctly.

See Subsection 15.4.15.1 for COL license information.

5.4.6 Reactor Core Isolation Cooling System

Evaluations of the Reactor Core Isolation Cooling (RCIC) System against the General design Criteria (GDC) 5, 29, 33, 34 and 54 are provided in Subsection 3.1.2. Evaluations against the ECCS GDC 2, 17, 27, 35, 36 and 37 are provided below.

Compliance with GDC 2—The RCIC System is housed within the reactor building, which provides protection against wind, floods, missiles and other natural phenomena. Also, the RCIC System and its components are designed to withstand earthquake and remain functional following a seismic event.

Compliance with GDC 17—The RCIC System is a part of the ECCS network. It is powered from a Class 1E source independent of the HPCF power sources. Although RCIC is a single loop system, it is redundant to the two HPCF loops which comprise the high pressure ECCS (1-RCIC and 2-HPCF). Since independent Class 1E power supplies are provided, redundancy and single failure criteria are met; thus, GDC 17 is satisfied.

Compliance with GDC 27—As discussed in Subsection 3.1.2.3.8.2, the design of the reactivity under postulated accident conditions with appropriate margin for stuck rods. The capability to cool the core is maintained under all postulated accident conditions by the RHR System. Thus, GDC 27 is satisfied without RCIC System.

Compliance with GDC 35—The RCIC System, in conjunction with HPCF, RHR and Auto Depressurization Systems, performs adequate core cooling to prevent excessive fuel clad temperature during LOCA event. Detailed discussion of the RCIC System meeting this GDC is described in Subsection 3.1.2.

Compliance with GDC 36—The RCIC System is designed such that inservice inspection of the system and its components is carried out in accordance with the intent of ASME Section XI. The RCIC design specification requires layout and arrangement of the containment penetrations, process piping, valves, and other critical equipment outside the reactor vessel, to the maximum practical extent, permit access by personnel and/or appropriate equipment for testing and inspection of system integrity.

Compliance with GDC 37—The RCIC System is designed such that the system and its components can be periodically tested to verify operability. System operability is demonstrated by preoperational and periodic testings in accordance with RG 1.68. Preoperational tests will ensure proper functioning of controls, instrumentation, pumps and valves. Periodic testings confirm systems availability and operability throughout the life of the plant. During normal plant operation, a full flow pump test is being performed periodically to assure systems design flow and head requirements are attained. All RCIC System components are capable of individual functional testings during plant operation. This includes sensors, instrumentation, control logics, pump, valves, and more. Should the need for RCIC operation occur while the system is being tested, the RCIC System and its components will automatically be re-aligned to provide cooling water into the reactor. The above test requirements satisfy GDC 37.

5.4.6.1 Design Basis

The Reactor Core Isolation Cooling (RCIC) System is a safety system consisting of a turbine, pump, piping, valves, accessories, and instrumentation designed to assure that sufficient reactor water inventory is maintained in the reactor vessel to permit adequate core cooling to take place. This prevents reactor fuel overheating during the following conditions:

(1) A loss-of-coolant (LOCA) event.

(2) Vessel isolated and maintained at hot standby.

(3) Vessel isolated and accompanied by loss of coolant flow from the reactor feedwater system.

(4) Complete plant shutdown with loss of normal feedwater before the reactor is depressurized to a level where the shutdown cooling system can be placed in operation.

(5) Loss of AC power (Station Blackout (SBO)).

The RCIC System is designed to perform its vessel water inventory control function without AC power for at least 2 hours. Supporting systems such as DC power and the RCIC water supply are designed to support the RCIC System during this time period. Without AC power, RCIC room cooling will not be available. However, room temperature during the 2 hour period will not reach the maximum temperature for which the RCIC equipment has been qualified.

Inspections and analyses of the as-built RCIC System and supporting auxiliaries will be performed to confirm compliance with the 2 hour SBO design commitment. These activities will include an inspection of design documentation associated with the RCIC System, the Division I Class IE DC power supply system and the RCIC water supply equipment to confirm that the 2 hour SBO capability is part of the design basis requirements for this equipment and has been incorporated in the installed systems. In addition, an evaluation will be performed of the regions of the Reactor Building housing the RCIC equipment to confirm that environmental

conditions during a 2 hour SBO event (for which HVAC systems will not be available) will not exceed the envelope of conditions used to qualify the RCIC equipment. These evaluations will be documented in an RCIC Two Hour Station Blackout Evaluation. Auxiliaries have the capability to operate for a period of 8 hours. Analyses to demonstrate this non-design basis capability utilize realistic, best-estimate assumptions and analysis methods. See Subsection 5.4.15.2 for COL license information requirements.

During loss of AC power, the RCIC System, when started at water Level 2, is capable of preventing water level from dropping below the level which ADS mitigates (Level 1). This accounts for decay heat boiloff and primary system leakages.

Following a reactor scram, steam generation will continue at a reduced rate due to the core fission product decay heat. At this time, the turbine bypass system will divert the steam to the main condenser, and the feedwater system will supply the makeup water required to maintain reactor vessel inventory.

In the event that the reactor vessel is isolated and the feedwater supply unavailable, relief valves are provided to automatically (or remote manually) maintain vessel pressure within desirable limits. The water level in the reactor vessel will drop due to continued steam generation by decay heat. Upon reaching a predetermined low level, the RCIC System will be initiated automatically. The turbine-driven pump will supply demineralized makeup water from (1) the condensate storage tank (CST) to the reactor vessel and (2) the suppression pool. Seismically installed level instrumentation is provided for automatic transfer of the water source with manual override from CST to suppression pool on receipt of either a low CST water level or high suppression pool level signals (CST water is primary source). The turbine will be driven with a portion of the decay heat steam from the reactor vessel and will exhaust to the suppression pool. Suppression pool water is not usually demineralized and hence should only be used in the event all sources of demineralized water have been exhausted.

During RCIC operation, the suppression pool shall act as the heat sink for steam generated by reactor decay heat. This will result in a rise in pool water temperature. RHR heat exchangers are used to maintain pool water temperature within acceptable limits by cooling the pool water.

5.4.6.1.1 Residual Heat and Isolation

5.4.6.1.1.1 Residual Heat

The RCIC System shall initiate and discharge, within 30 seconds, a specified constant flow into the reactor vessel over a specified pressure range. The RCIC water discharge into the reactor vessel varies between a temperature of 10°C up to and including a temperature of 77°C. The mixture of the cool RCIC water and the hot steam does the following:

(1) Quenches steam.

(2) Removes reactor residual heat.

(3) Replenishes reactor vessel inventory.

Redundantly, the HPCF System performs a similar function, hence providing single failure protection. Both systems use different reliable electrical power sources which permit operation with either onsite or offsite power. Additionally, the RHR System performs a residual heat removal function.

5.4.6.1.1.2 Isolation

Isolation valve arrangements include the following:

(1) Two RCIC lines penetrate the reactor coolant pressure boundary (RCPB). The first is the RCIC steamline, which branches off one of the main steamlines between the reactor vessel and the MSIVs. This line has two automatic motor-operated isolation valves, one located inside and the other outside the drywell. An automatic motor-operated inboard RCIC isolation bypass valve is used. The isolation signals noted earlier close these valves.

(2) The RCIC pump discharge line is the other line that penetrates the RCPB, which directs flow into a feedwater line just outboard of the primary containment. This line has a testable check valve and an automatic motor-operated valve located outside primary containment.

(3) The RCIC turbine exhaust line also penetrates the containment. Containment penetration is located about a meter above the suppression pool maximum water level. A vacuum breaking line with two vacuum breakers in series runs in the suppression pool air space and connects to the RCIC turbine exhaust line inside the containment. Located outside the containment in the turbine exhaust line is a remote-manually controlled motor-operated isolation valve.

(4) The RCIC pump suction line, minimum flow pump discharge line, and turbine exhaust line penetrate the containment and are submerged in the suppression pool. The isolation valves for these lines are outside the containment and require automatic isolation operation, except for the turbine exhaust line which has remote manual operation.

The RCIC System design includes interfaces with redundant leak detection devices, monitoring:

(1) A high pressure drop across a flow device in the steam supply line equivalent to 300% of the steady-state steam flow at 8.22 MPaA pressure.

(2) A high area temperature utilizing temperature switches as described in the leak detection system (high area temperature shall be alarmed in the control room).

(3) A low reactor pressure of 0.34 MPaG minimum.

(4) A high pressure in the RCIC turbine exhaust line.

These devices, activated by the redundant power supplies, automatically isolate the steam supply to the RCIC turbine and trip the turbine. The HPCF System provides redundancy for the RCIC System should it become isolated.

5.4.6.1.2 Reliability, Operability, and Manual Operation

5.4.6.1.2.1 Reliability and Operability

The RCIC System (Table 3.2-1) is designed commensurate with the safety importance of the system and its equipment. Each component is individually tested to confirm compliance with system requirements. The system as a whole is tested during both the startup and pre-operational phases of the plant to set a base mark for system reliability. To confirm that the system maintains this mark, functional and operability testing is performed at predetermined intervals throughout the life of the plant.

A design flow functional test of the RCIC System may be performed during normal plant operation by drawing suction from the suppression pool and discharging through a full flow test return line to the suppression pool. All components of the RCIC System are capable of individual functional testing during normal plant operation. System control provides automatic return from test to operating mode if system initiation is required, and the flow is automatically directed to the vessel (Subsection 5.4.6.2.4).

See Subsection 5.4.15.2 for COL license information.

5.4.6.1.2.2 Manual Operation

In addition to the automatic operational features, provisions are included for manual startup, operation, and shutdown of the RCIC System in the event initiation or shutdown signals do not exist or the control room is inaccessible.

5.4.6.1.3 Loss of Offsite Power

The RCIC System power is derived from a reliable source that is maintained by either onsite or offsite power.

5.4.6.1.4 Physical Damage

The system is designed to the requirements presented in Table 3.2-1 commensurate with the safety importance of the system and its equipment. The RCIC System is physically located in a different quadrant of the reactor building and utilizes different divisional power and separate electrical routings than its redundant system (Subsections 5.4.6.1.1.1 and 5.4.6.2.4).

5.4.6.1.5 Environment

The RCIC System operates for the time intervals and the environmental conditions specified in Section 3.11.

5.4.6.2 System Design

5.4.6.2.1 General

5.4.6.2.1.1 Description

The summary description of the RCIC System is presented in Subsection 5.4.6.1, which defines the general system functions and components. The detailed description of the system, its components, and operation is presented in the following subsections.

5.4.6.2.1.2 Diagrams

The following diagrams are included for the RCIC System:

(1) Figure is a schematic diagram showing components, piping, points where interface system and subsystems tie together, and instrumentation and controls associated with subsystem and component actuation.

(2) Figure is a schematic showing temperature, pressure and flows for RCIC operation and system process data hydraulic requirements.

5.4.6.2.1.3 Interlocks

The following defines the various electrical interlocks:

(1) Valves F039 and F047 are two key-locked open valves with individual keylocks.

(2) The F001 limit switch activates when not fully closed and closes F008 and F009.

(3) The F039 limit switch activates when fully open and clears the permissive for F037 and F045 to open.

(4) The F037 and turbine trip and throttle valve limit switches activate when not fully closed to initiate the turbine governor valve signal ramp generator and to clear permissives for F004 to open.

(5) The F037 limit switch activates when fully closed and permits F031, F032, F040 and F041 to open and closes F004 and F011.

(6) The turbine trip throttle valve (part of C002) limit switch activates when fully closed and closes F004 and F011.

(7) High reactor water level (Level 8) closes F037, F012, F045 and, subsequently, F004 and F011. This level signal is sealed in and must be manually reset. It will automatically clear if a low reactor water level (Level 2) reoccurs.

(8) High turbine exhaust pressure, low pump suction pressure, 110% turbine electrical overspeed, or an isolation signal actuates the turbine trip logic and closes the turbine trip and throttle valve. When the signal is cleared, the trip and throttle valve must be reset from the control room.

(9) Overspeed of 125% trips the mechanical trip, which is reset at the turbine.

(10) An isolation signal closes F035, F036, F048, and other valves as noted in Items (6) and (8).

(11) An initiation signal opens F001 and F004, F037, F012 and F045 when other permissives are satisfied, starts the gland seal system, and closes F008 and F009.

(12) High- and low-inlet RCIC steamline drain pot levels respectively open and close F058.

(13) The combined signal of low flow plus pump discharge pressure opens and, with increased flow, closes F011. Also see Items (5), (6) and (7).

5.4.6.2.2 Equipment and Component Description

5.4.6.2.2.1 Design Conditions

Operating parameters for the components of the RCIC System are shown in Figure . The RCIC components are:

(1) One 100% capacity turbine and accessories.

(2) One 100% capacity pump assembly and accessories.

(3) Piping, valves, and instrumentation for:

(a) Steam supply to the turbine

(b) Turbine exhaust to the suppression pool

(c) Makeup supply from the condensate storage tank to the pump suction

(d) Makeup supply from the suppression pool to the pump suction

(e) Pump discharge to the feedwater line, a full flow test return line, a minimum flow bypass line to the suppression pool, and a coolant water supply to accessory equipment

The basis for the design conditions is ASME B&PV Code Section III, Nuclear Power Plant Components.

Analysis of the net positive suction head (NPSH) available to the RCIC pump in accordance with the recommendations of Regulatory Guide 1.1 is provided in Table 5.4-1a.

5.4.6.2.2.2 Design Parameters

Design parameters for the RCIC System components are given in Table 5.4-2. See Figure for cross-reference of component numbers.

5.4.6.2.3 Applicable Codes and Classifications

The RCIC System components within the drywell, including the outer isolation valve, are designed in accordance with ASME Code Section III, Class 1, Nuclear Power Plant Components. The RCIC System is also designed to Seismic Category I.

The RCIC System component classifications and those for the condensate storage system are given in Table 3.2-1.

5.4.6.2.4 System Reliability Considerations

To assure that the RCIC System will operate when necessary and in time to prevent inadequate core cooling, the power supply for the system is taken from reliable immediately available energy sources. Added assurance is given by the capability for periodic testing during station operation.

Evaluation of reliability of the instrumentation for the RCIC System shows that no failure of a single initiating sensor either prevents or falsely starts the system.

In order to assure HPCF or RCIC availability for the operational events noted previously, certain design considerations are utilized in design of both systems.

(1) Physical Independence

The two systems are located in separate areas of the reactor building. Piping runs are separated and the water delivered from each system enters the reactor vessel via different nozzles.

(2) Prime Mover Diversity and Independence

Independence is achieved by using a steam turbine to drive the RCIC pump and an electric motor-driven pump for the HPCF System. The HPCF motor is supplied from either normal AC power or a separate diesel generator.

(3) Control Independence

Independence is secured by using different battery systems to provide control power to each unit. Separate detection/initiation logics are also used for each system.

(4) Environmental Independence

Both systems are designed to meet Safety Class 1 requirements. Environment in the equipment rooms is maintained by separate auxiliary systems.

(5) Periodic Testing

A design flow functional test of the RCIC System can be performed during plant operation by taking suction from the suppression pool and discharging through the full flow test return line back to the suppression pool. The discharge valve to the feedwater line remains closed during the test and reactor operation is undisturbed. All components of the RCIC System are capable of individual functional testing during normal plant operation. Control system design provides automatic return from test to operating mode if system initiation is required, and the flow is automatically directed to the vessel.

(6) General

Periodic inspections and maintenance of the turbine-pump unit are conducted in accordance with manufacturers instructions. Valve position indication and instrumentation alarms are displayed in the control room.

5.4.6.2.5 System Operation

Manual actions required for the various modes of RCIC are defined in the following subsections.

5.4.6.2.5.1 Standby Mode

During normal plant operation, the RCIC System is in a standby condition with the motor-operated valves in their normally open or normally closed positions as shown in the piping and instrumentation diagram (P&ID) included in Figure . In this mode, the RCIC pump discharge line is kept filled. The relief valve in the pump suction line protects against overpressure from backleakage through the pump discharge isolation valve and check valve.

5.4.6.2.5.2 Emergency Mode (Transient Events and LOCA Events)

Startup of the RCIC System occurs automatically either upon receipt of a reactor vessel low water level signal (Level 2) or a high drywell pressure signal. During startup, the turbine control system limits the turbine-pump speed to its maximum normal operating value, controls transient acceleration, and positions the turbine governor valve as required to maintain constant pump discharge flow over the pressure range of the system. Input to the turbine governor is

from the flow controller monitoring the pump discharge flow. During standby conditions, the flow controller output is saturated at its maximum value.

When the RCIC System is shut down, the low signal select feature of the turbine control system selects the idle setting of a speed ramp generator. The ramp generator output signal during shutdown corresponds to the low limit step and a turbine speed demand of 73.3 to 104.7 rad/s.

On RCIC System startup, bypass valve F045 (provided to reduce the frequency of turbine overspeed trips) opens to accelerate the turbine to an initial peak speed of approximately 157 rad/s; now under governor control, turbine speed is returned to the low limit turbine speed demand of 73.3 rad/s to 104.7 rad/s. After a predetermined delay (5 to 10 s), the steam supply valve leaves the full closed position and the ramp generator is released. The low signal select feature selects and sends this increasing ramp signal to the governor. The turbine increases in speed until the pump flow satisfies the controller setpoint. Then the controller leaves saturation, responds to the input error, and integrates the output signal to satisfy the input demand.

The operator has the capability to select manual control of the governor, and adjust speed and flow (within hardware limitations) to match decay heat steam generation during the period of RCIC operation.

The RCIC pump delivers the makeup water to the reactor vessel through the feedwater line, which distributes it to obtain mixing with the hot water or steam within the reactor vessel.

The RCIC turbine will trip automatically upon receipt of any signal indicating turbine overspeed, low pump suction pressure, high turbine exhaust pressure, or an auto-isolation signal. Automatic isolation occurs upon receipt of any signal indicating:

(1) A high pressure drop across a flow device in the steam supply line equivalent to 300% of the steady-state steam flow at 8.22 MPaA.

(2) A high area temperature.

(3) A low reactor pressure of 0.34 MPaG minimum.

(4) A high pressure in the turbine exhaust line.

The steam supply valve F037, steam supply bypass valve F045 and cooling water supply valve F012 will close upon receipt of signal indicating high water level (Level 8) in the reactor vessel. These valves will reopen (auto-restart) should an indication of low water level (Level 2) in the reactor vessel occur. Water Level 2 automatically resets the water level trip signal. The RCIC System can also be started, operated, and shut down remote-manually provided initiation or shutdown signals do not exist.

5.4.6.2.5.3 Test Mode

A design functional test of the RCIC System may be performed during normal plant operation by drawing suction from the suppression pool and discharging through a full flow test return line back to the suppression pool. The discharge valve to the vessel remains closed during test mode operation. The system will automatically return from test to operating mode if system initiation is required and the flow will be automatically directed to the vessel.

5.4.6.2.5.4 Limiting Single Failure

The most limiting single failure with the RCIC System and its HPCF system backup is the failure of HPCF. With an HPCF failure, if the capacity of the RCIC System is adequate to maintain reactor water level, the operator shall follow Subsection 5.4.6.2.5.2. However, if the RCIC capacity is inadequate, Subsection 5.4.6.2.5.2 still applies. Additionally, the operator may initiate the ADS described in Subsection 6.3.2.2.2.

5.4.6.3 Performance Evaluation

The analytical methods and assumptions in evaluating the RCIC System are presented in Chapter 15 and Appendix 15A. The RCIC System provides the flows required from the analysis (Figure) within a 30 second interval based upon considerations noted in Subsection 5.4.6.2.4.

5.4.6.4 Preoperational Testing

The preoperational and initial startup test program for the RCIC System is presented in Chapter 14.

5.4.7 Residual Heat Removal System

Evaluations of the Residual Heat Removal (RHR) System against the applicable General Design Criteria (GDC) are provided in Subsections 3.1.2 and 5.4.7.1.4.

5.4.7.1 Design Basis

The RHR System is composed of three electrical and mechanical independent divisions designated A, B, and C. Each division contains the necessary piping, pumps, valves and heat exchangers. In the low pressure flooder mode, suction is taken from the suppression pool and injected into the vessel outside the core shroud (via the feedwater line on Division A and via the low pressure flooder subsystem discharge return line on Divisions B and C).

The RHR System provides two independent containment spray cooling systems (on loops B and C), each having a common header in the wetwell and a common spray header in the drywell and sufficient capacity for containment depressurization.

Shutdown cooling suction is taken directly from the reactor via three shutdown cooling suction nozzles on the vessel. Shutdown cooling return flow is via the feedwater line on loop A and via low pressure flooder subsystem discharge return lines on loops B and C.

Connections are provided to the upper pools on two loops to return shutdown cooling flow to the upper pools during normal refueling activities if necessary. These connections also allow the RHR System to provide additional fuel pool cooling capacity as required by the Fuel Pool Cooling System during the initial stages of the refueling outage.

The RHR System provides an AC-independent water addition subsystem which consists of piping and manual valves connecting the fire protection system to the RHR pump discharge line on loop C downstream of the pump's discharge check valve. This flow path allows for injection of water into the reactor vessel and the drywell spray during severe accident conditions in which all AC power and all ECCS pumps are unavailable. Additionally, an external hookup outside the reactor building for connection of a fire truck pump to an alternate water source is provided.

As shown in Table 5.4-4, the RHR heat exchanger primary (tube) side design pressure is 3.43 MPaG and the secondary (shell) side design pressure is 1.37 MPaG. This pressure distribution is acceptable for the following reasons:

(1) Heat exchanger primary side leakage is accommodated by the surge tank of the pump loop of the reactor building cooling water system. The inlet to the secondary side of the heat exchanger is always open to this continuously running pump loop.

(2) The shell is an extension of the reactor building cooling water system's region. The reactor building cooling water system has a design pressure of 1.37 MPaG.

(3) The ABWR RHR heat exchanger has taken advantage of a design change that was made with respect to prior BWRs. ABWR has the reactor water flowing through the tube side of the heat exchanger, whereas, prior BWRs had the reactor water flowing through the shell side. The primary purpose for the change was to reduce radiation buildup in the heat exchanger by providing a more open geometry flow path through the center of the tubes, as apposed to the shell side construction of spacers, baffles, and low flow velocity locations, which can provide places for radioactive slug to accumulate. Also, the ABWR does not have a steam condensing mode, which needed reactor water or steam on the shell side. Tubes can accommodate a higher design pressure much more easily and effectively than the shell's large cylindrical structure; therefore, the shell can take advantage of the reactor building cooling water system's lower design pressure.

5.4.7.1.1 Functional Design Basis

The RHR System provides the following four principal functions:

(1) Core cooling water supply to the reactor to compensate for water loss beyond the normal control range from any cause up to and including the design basis (LOCA).

(2) Suppression pool cooling to remove heat released to the suppression pool (wetwell), as necessary, following heat inputs to the pool.

(3) Wetwell and drywell sprays to remove heat and condense steam in both the drywell and wetwell air volumes following a LOCA. In addition, the drywell sprays are intended to provide removal of fission products released during a LOCA.

(4) Shutdown cooling to remove decay and sensible heat from the reactor. This includes the safety-related requirements that the reactor must be brought to a cold shutdown condition using safety grade equipment as well as the non-safety functions associated with refueling and servicing operations.

Also, other secondary functions are provided, such as periodic testing, fuel pool cooling, pool draining and AC-independent water addition.

The RHR System has ten different operational configurations that are discussed separately to provide clarity.

5.4.7.1.1.1 Low Pressure Flooder (LPFL) Mode

Each loop in the Low Pressure Flooder Subsystem provides core cooling water supply to compensate for water loss beyond the normal control range from any cause up to and including the design basis (LOCA). This subsystem is initiated automatically by a low water level in the reactor vessel or high pressure in the drywell. Each loop in the system can also be placed in operation by means of a manual initiation pushbutton switch.

During the LPFL mode, water is pumped from the suppression pool initially and diverted through the minimum flow lines until the injection valve in the discharge line is signalled to open on low reactor pressure. As the injection valve opens on low reactor pressure, flow to the RPV comes from the suppression pool, through the RHR heat exchanger, and the injection valve. This creates a flow signal that closes the minimum flow line. The RHR System shall be capable of delivering flow into the reactor vessel within 36 seconds after receipt of the low pressure permissive signal following system initiation. This assumes a one-second delay for the instrumentation to detect the low pressure permissive and generate an initiation signal to the injection valve. Consequently, the 36-second RHR requirement is consistent with the 37-second injection time assumed in LOCA analyses. Additionally, the time for the pumps to reach rated speed, from the receipt of at least one actuation signal, is 29 seconds.

The system remains in this mode until manually stopped by the operator.

5.4.7.1.1.2 Test Mode

Full flow functional tests of the RHR System can be performed during normal plant operation or during plant shutdown by manual operation of the RHR System from the control room. For plant testing during normal plant operation, the pump is started and the return line to the suppression pool is opened. A reverse sequence is used to terminate this test. Upon receipt of an automatic initiation signal while in the flow testing mode, the RHR System is returned to automatic control.

5.4.7.1.1.3 Minimum Flow Mode

If the main discharge flow reaches a predetermined low value, the minimum flow valve in that loop will automatically open to provide some pump flow. During this mode, water is pumped from the suppression pool and returned to the suppression pool via the low flow bypass line. Sufficient main discharge flow will cause the minimum flow valve to close automatically.

5.4.7.1.1.4 Standby Mode

During normal plant operation, the RHR loops are in a standby condition with the motor-operated valves in the normally open or normally closed position. The valves on the suppression pool suction line are open and the minimum flow valves are open; the test valves and injection valves are closed. The RHR pumps are not running, while the water leg pumps (line fill pumps) are running to keep the pump discharge lines filled. The relief valves in the pump suction and pump discharge lines protect the lines against overpressure.

5.4.7.1.1.5 Suppression Pool Cooling

The Suppression Pool Cooling Subsystem provides means to remove heat released into the suppression pool, as necessary, following heat additions to the pool. During this mode of operation, water is pumped from the suppression pool through the RHR heat exchangers, and back to the suppression pool. Suppression pool (S/P) cooling mode is automatically initiated for the three loops from a S/P high temperature signal and no RHR initiation signal (LOCA signal) being present. The Reactor Building Cooling Water (RCW) System automatically provides support for automatic S/P cooling. Once S/P cooling has been started automatically, it is terminated manually. The S/P cooling mode is also terminated by the initiation (LOCA) signal so that the injection LPFL mode is not inhibited. Manually starting the individual S/P cooling loops is possible when the injection valve of that loop is closed. Manually stopping the individual S/P cooling loops is possible without restriction. The automatic suppression pool cooling feature is not taken into account in the safety analysis.

5.4.7.1.1.6 Wetwell and Drywell Spray Cooling

Two of the RHR loops provide containment spray cooling subsystems. Each subsystem provides both wetwell and drywell spray cooling. This subsystem provides steam condensation and primary containment atmospheric cooling following a small break LOCA by pumping water from the suppression pool, through the heat exchangers and into the wetwell and drywell spray spargers in the primary containment. The preferred method of containment spray is with both wetwell and drywell spray used simultaneously started by manual initiation. If wetwell spray is desired by itself, without drywell spray, it can be initiated by operator action, but must be used in conjunction with one of the full flow modes, which are either the suppression pool (S/P) cooling mode or the low pressure flooder (LPFL) mode. To accomplish this, a full flow mode must be initiated first, then its flow is throttled back to approximately one half flow. The wetwell spray valve would then be opened, followed by re-establishing rated flow for wetwell spray operation by opening the applicable full flow mode throttle valve as required. This mode of operation is only recommended for performance of periodic surveillance required by the

Technical Specifications, which would likely utilize S/P cooling for the full flow mode. The wetwell spray mode is terminated automatically by a LOCA signal. If desired, the drywell spray mode can be initiated by operator action of opening the drywell spray valves post-LOCA in the pressure of high drywell pressure. The drywell mode is terminated automatically as the RPV injection valve starts to open, which results from a LOCA and reactor depressurization. Both wetwell and drywell spray modes can also be terminated by operator action. The wetwell spray lines have a flow meter with indication in the control room.

5.4.7.1.1.7 Shutdown Cooling

The Shutdown Cooling Subsystem is manually activated by the operator following insertion of the control rods and normal blowdown to the main condenser. In this mode, the RHR System removes residual heat (decay and sensible) from the reactor vessel water at a rate sufficient to cool it to 60°C within 24 hours after the control rods are inserted. The conditions are achieved for normal operation where all three RHR loops are functioning together. The subsystem can maintain or reduce this temperature further so that the reactor can be refueled and serviced.

For emergency operation where one of the RHR loops has failed, the RHR System is capable of bringing the reactor to the cold shutdown condition of 100°C within 36 hours following reactor shutdown.

Reactor water is cooled by pumping it directly from the reactor shutdown cooling nozzles, through the RHR heat exchangers, and back to the vessel (via feedwater on one loop and via the low pressure flooder subsystem on the other two loops).

This subsystem is initiated and shut down by operator action.

The Branch Technical Position RSB 5-1, Section B.1.(b) and (c), of the RHR Standard Review Plan, SRP 5.4.7, requires the RHR suction side isolation valves to have independent diverse interlocks to prevent the valves from being opened unless the Reactor Coolant System (RCS) pressure is below the RHR System design pressure. While the ABWR RHR design does not explicitly meet this requirement for diversity, it does meet the intent of the requirement to provide high reliability against inadvertent opening of the valves. The pressure signal that provides the interlock function is supplied from 2-out-of-4 logic, which has four independent pressure sensor and transmitter inputs. The independence is provided by each being in a separate instrument division. Furthermore, the inboard and outboard valves of a common shutdown cooling suction line are operated by different electrical divisions.

5.4.7.1.1.8 Fuel Pool Cooling

Two of the RHR loops provide supplemental fuel pool cooling during normal refueling activities and any time the fuel pool heat load exceeds the cooling capacity of the fuel pool heat exchangers. For normal refueling activities where the reactor well is flooded and the fuel pool gates are open, water is drawn from the reactor shutdown suction lines, pumped through the RHR heat exchangers and discharged through the reactor well distribution spargers. For 100% core removal, if necessary, water is drawn from the Fuel Pool Cooling (FPC) System skimmer

surge tanks, pumped through the RHR heat exchangers and returned to the fuel via the FPC System cooling lines. These operations are initiated and shut down by operator action.

5.4.7.1.1.9 Reactor Well and Equipment Pool Drain

The RHR System provides routing and connections for emptying the reactor well and dryer/separator pit equipment pool to the suppression pool. Water is pumped or drained by gravity through the FPC System return lines to the RHR shutdown suction lines and then to the radwaste or the suppression pool.

5.4.7.1.1.10 AC-Independent Water Addition (ACIWA) Mode

The AC-independent water addition mode (Alternating Current independent) of the RHR System provides a means for introducing water from the Fire Protection System (FPS) directly into the reactor pressure vessel, or to the drywell spray header, or to the wetwell spray header under degraded plant conditions when AC power is not available from either onsite or offsite sources. The RHR System provides the piping and valves which connect the FPS piping with the RHR loop C pump discharge piping. The manual valves in this line permit adding water from the FPS to the RHR System if the RHR System is not operable. The primary means for supplying water through this connection is by use of the diesel-driven pump in the FPS. A backup to this pump is provided by a connection on the outside of the reactor building at grade level, which allows hookup of the ACIWA to a fire truck pump.

Figure 5.4-10 shows the connections from either the diesel-driven pumps or the fire truck to the RHR system. The connections to the diesel-driven pump are in the RHR valve room. Opening valves F101 and F102 allows water to flow from the FPS into the RHR piping. Periodic stroke testing of these valves is required by Table 3.9-8 to ensure valve operability. The fire truck connection is located outside the reactor building at grade level. Both connections to the RHR system are protected by a check valve (F100 and F104 for the diesel-driven pump and the fire truck, respectively) to insure that RCS pressurization does not result in a breach of the injection path. Detailed procedures for the operation of the ACIWA, including operation of the FPS valve in the yard, are required to be developed by the COL applicant. See Section 19.9.7.

It is likely that elevated radiation levels may exist in the areas where the valves to align the ACIWA System for vessel injection or drywell spray are located. Preliminary calculations indicate that dose rates could range from 2 to 10R/h in these areas depending on specific piping arrangements, shielding, and SGTS operation. The COL applicant is required to perform dose rate calculations in the ACIWA operating procedures. See Section 19.9.7. If contaminated water were circulated through specific ECCS lines following core damage, the areas where the ACIWA System valves are located would not be accessible. However, it is anticipated that ACIWA System operation will not be required following core damage and subsequent ECCS operation. Under these postulated conditions, operation of the ECCS will obviate the need for ACIWA operation.

5.4.7.1.1.10.1 Vessel Injection mode of ACIWA

The primary injection path for the ACIWA mode is into the vessel via the LPFL header. For injection to occur, the RPV must be at low pressure. The purpose of vessel injection is to prevent core damage or, if core damage has already occurred, to terminate melt progression. Melt progression can potentially be terminated in-vessel if the debris has not failed the bottom of the vessel. After vessel failure, initiation of the vessel injection mode of the ACIWA mode will cover the debris in the lower drywell with water.

If the vessel injection mode of the ACIWA mode is not initiated in time to prevent core damage, its use can mitigate the consequences of core damage by enhancing cooling, preventing radiative heating from the debris and adding thermal mass to the containment. If injection is initiated prior to vessel failure, melt progression can be arrested in-vessel. However, if vessel failure occurs, debris will relocate from the vessel. If vessel failure occurs at low pressure (less than approximately 1.37 MPaG), the debris will relocate only into the lower drywell. After vessel failure, water injected into the vessel will flow out of the vessel breach into lower drywell. Water flowing into the lower drywell will cover the core debris and enhance debris cooling.

Injection by the ACIWA mode is terminated during a severe accident when the water level in the containment reaches the bottom of the vessel. Higher water levels could lead to a situation in which the piping of the Containment Overpressure Protection System (COPS) could be jeopardized. COPS activation is expected in core damage scenarios in which containment heat removal is lost and not recovered. If the suppression pool water level is near the COPS elevation when rupture disk opens, water could potentially enter the COPS piping and impart significant water hammer loads. These loads are precluded by terminating water addition when the containment water level reaches the bottom of the RPV which is a few meters below the rupture disk. Another reason for terminating injection by the ACIWA mode is the reduction in free space available in the wetwell for non-condensables as the suppression pool level rises. Reducing the non-condensable volume increases containment pressure. Terminating injection at the bottom of the RPV approximately balances the pressure reduction due to heat absorption by the sprays and pressure increase due to non-condensable compression in the wetwell.

If vessel failure occurs with the RPV at an elevated pressure, high pressure melt injection could occur resulting in fragmented core debris being transported into the upper drywell. Water injection into the vessel by the ACIWA mode cannot reach this debris. In this scenario the drywell spray mode of the ACIWA mode must be used. The drywell spray mode is described in Subsection 5.4.7.1.1.10.2.

5.4.7.1.1.10.2 Drywell Spray Mode of ACIWA

The alternate injection path for the ACIWA mode is into the drywell spray header. The conditions in which drywell spray mode is used are described in the Emergency Procedure

Guidelines in Appendix 18A. The purpose of drywell spray injection is to mitigate the consequences of core damage and to supply water to ex-vessel debris.

The water sprayed into the upper drywell absorbs heat from the RPV outer surfaces and the debris which relocates into the upper drywell, if any, upon vessel failure at high pressure. Cooling of the upper drywell prevents overtemperature failure of the seals. Water which collects on the upper drywell floor is directed into the wetwell through the connecting vents. The suppression pool water level will eventually rise to the point of overflowing into the pedestal region. When overflow occurs, the debris in the lower drywell will be covered with water.

Drywell spray operation provides significant mitigation of suppression pool bypass events in which the bypass path includes the drywell. The incoming water absorbs heat and condenses steam. While the heat absorption is not as efficient nor as extensive as what would occur if the suppression pool was not bypassed, the time to COPS activation or containment failure can be delayed significantly. This delay results in a significant reduction in the radioactive release due to fission product decay and natural removal mechanisms.

The water sprayed into the upper drywell also scrubs fission products which are in the drywell airspace. Scrubbing reduces the amount of radioactive materials which are available for release from the containment.

Drywell spray injection is terminated when the containment water level reaches the bottom of the vessel. The basis for termination is the same as that for the vessel injection mode of the ACIWA system as described in Subsection 5.4.7.1.1.10.1.

5.4.7.1.1.10.3 ACIWA Flow Rate

The water flow rate of the ACIWA mode has been selected to optimize the containment pressurization after the onset of core damage. The flow rate supplied by the ACIWA mode of the RHR System using either the diesel-driven pump or the fire pump truck is between 0.04 m^3/s and 0.06 m^3/s for conditions between no containment backpressure and a back pressure equal to the COPS setpoint. This flow rate is sufficient to absorb decay heat while maximizing the time until water level reaches the bottom of the vessel, at which point water addition is terminated. The COL applicant shall perform analysis to determine if a flow reduction device (e.g., an orifice plate or a spool piece) is required to limit the flow from the diesel-driven pump and/or the fire pump truck to achieve the specified maximum flow. (See Subsection 5.4.15.3 for COL license information).

Flow rates outside the specified range will decrease the time to COPS actuation in situations in which containment heat removal is not recovered. Lower flow rates will result in some of the incoming water being vaporized, thereby increasing the rate of containment pressurization. Higher flow rates will decrease the length of time until the water level reaches the bottom of the RPV and flow is terminated. Containment pressurization ensues shortly after flow termination as the non-condensables are purged into the wetwell and net steam production begins. Therefore, the optimal injection flow rate is the amount that can just absorb the generated heat without exceeding saturated liquid conditions at containment pressure.

5.4.7.1.1.10.4 Containment Performance Without ACIWA

The ACIWA mode of the RHR System provides manual capability to prevent core damage when all emergency core cooling systems are lost. If core damage occurs and heat removal is not recovered, this system increases the time to COPS operation, provides cooling of the seals of the movable penetrations, and provides cooling of the seals of the drywell air space. Without ACIWA, the lower drywell would heat up after core damage and vessel failure until the passive flooder system actuates. Flooder actuation will provide water to the debris in the lower drywell in a similar manner as the ACIWA mode. However, the passive flooder does not add thermal mass to the containment, nor does it have the capability of mitigating suppression pool bypass.

Operation of the AC-independent water addition mode is entirely manual. All of the valves which must be opened or closed during fire water addition are located within the same ECCS valve room. The connection to add water using a fire truck pump is located outside the reactor building at grade level.

5.4.7.1.2 Design Basis for Isolation of RHR System from Reactor Coolant System

The low pressure portions of the RHR System are isolated from full reactor pressure whenever the primary system pressure is above the RHR System design pressure (see Subsection 5.4.7.1.3 for details). In addition, automatic isolation occurs for reasons of maintaining water inventory which are unrelated to line pressure rating. A low water level signal closes the RHR containment isolation valves that are provided for the shutdown cooling suction. Subsection 5.2.5 provides an explanation of the Leak Detection System and the isolation signal [see Subsection 5.2.5.2.1 (12) and Table 5.4-6].

The RHR pumps are protected against damage from a closed discharge valve by means of automatic minimum flow valves which open on low mainline flow and close on high mainline flow.

5.4.7.1.3 Design Basis for Pressure Relief Capacity

The relief valves in the RHR System are sized on the basis of thermal relief and valve bypass leakage only.

Redundant interlocks prevent opening valves to the low pressure suction piping when the reactor pressure is above the shutdown range. These same interlocks initiate valve closure on increasing reactor pressure.

Overpressure protection is achieved during system operation when the system is not isolated from the reactor coolant pressure. The RHR System is operational and not isolated from the Reactor Coolant System only when the reactor is depressurized. Two modes of operation are applicable: the flooder mode and the shutdown cooling mode. For the flooder mode, the injection valve opens through interlocks only for reactor pressure less than approximately 3.45 MPaG. For the shutdown cooling mode, the suction valves can be opened through interlocks only for reactor pressures less than approximately 0.93 MPaG. Once the system is operating in

these lower pressure modes, events are not expected that would cause the pressure to increase. If, for some unlikely event the pressure would increase, the pressure interlocks that allowed the valves to initially open would cause the valves to close on increasing pressure. The RHR System piping would then be protected from overpressure. The valves close at low pressure, and the rate of pressure increase would be low. During the time period while the valves are closing at these low pressure conditions, the RHR System design and margins that satisfy the interfacing system LOCA provide ample overpressure protection.

In addition, a high pressure check valve will close to prevent reverse flow if the pressure should increase. Relief valves in the discharge piping are sized to account for leakage past the check valve and are coded in accordance with ASME Boiler and Pressure Vessel Code, Section III.

5.4.7.1.4 Design Basis with Respect to General Design Criterion 5

The RHR System for this unit does not share equipment or structures with any other nuclear unit.

5.4.7.1.5 Design Basis for Reliability and Operability

The design basis for the shutdown cooling mode of the RHR System is that this mode is controlled by the operator from the control room. The only operations performed outside of the control room for a normal shutdown are manual operation of local flushing water admission valves, which are the means of providing clean water to the shutdown portions of the RHR System.

Three separate shutdown cooling loops are provided, and, although the three loops are required for shutdown under normal circumstances, the reactor coolant can be brought to 100°C in less than 36 hours with only two loops in operation. The RHR System is part of the ECCS and therefore is required to be designed with redundancy, piping protection, power separation, etc., as required of such systems (see Section 6.3 for an explanation of the design bases for ECCS Systems).

Shutdown suction and discharge valves are required to be powered from both offsite and standby emergency power for purposes of isolation and shutdown following a loss of offsite power.

5.4.7.1.6 Design Basis for Protection from Physical Damage

The design basis for protection from physical damage, such as internally generated missiles, pipe break, seismic effects, and fires, are discussed in Sections 3.5, 3.6, 3.7, and Subsection 9.5.1.

5.4.7.2 Systems Design

5.4.7.2.1 System Diagrams

All of the RHR System components are shown in the P&ID (Figure). A description of the controls and instrumentation is presented in Subsection 7.3.1.1.1.

Figure is the RHR process diagram and data. All of the sizing modes of the system are shown in the process data. The interlock block diagram (IBD) for the RHR System is provided in Section 7.3.

Interlocks are provided to prevent (1) drawing vessel water to the suppression pool, (2) opening vessel suction valves above the suction lines or the discharge line design pressure, (3) inadvertent opening of drywell spray valves during RHR operation where the injection valve to the reactor is open and when drywell pressure is not high enough to require the drywell spray for pressure reduction, and (4) pump start when suction valve(s) are not open. A description of the RHR System logic (i.e., interlocks, permissives) is presented in Table 5.4-3.

5.4.7.2.2 Equipment and Component Description

(1) System Main pumps

The main pumps must satisfy the following system performance requirements. The pump equipment performance requirements include additional margins so that the system performance requirements can be achieved. These margins are standard GEH equipment specification practice and are included in procurement specifications for flow and pressure measuring accuracy and for power source frequency variation.

Number of pumps	3
Pump type	Centrifugal
Drive unit type	Constant Speed Induction Motor
Design flow rate	954 m^3/h
Total discharge head at design flow rate	125m
Maximum bypass flow	147.6 m^3/h
Minimum total discharge head at maximum bypass flow rate	220m Max 195m Min
Maximum runout flow	1130 m^3/h

Maximum pump brake horsepower	550 kW
Net positive suction head (NPSH) at 1m above the pump floor setting	2.4m
Process fluid temperature range	10 to 182°C

(2) Heat Exchangers

The RHR heat exchangers have three major functional requirements imposed upon them, as follows:

(a) **Post-LOCA Containment Cooling—**The RHR System limits the peak bulk suppression pool temperature to less than 97°C by direct pool cooling with two out of the three divisions.

(b) **Reactor Shutdown—**The RHR System removes enough residual heat (decay and sensible) from the reactor vessel water to cool it to 60°C within 24 hours after the control rods are inserted. This mode shall be manually activated after a blowdown to the main condenser reduces the reactor pressure to below 0.93 MPaG with all three divisions in operation.

(c) **Safe Shutdown—**The RHR System brings the reactor to a cold shutdown condition of less than 100°C within 36 hours of control rod insertion with two out of the three divisions in operation. The RHR System is manually activated into the shutdown cooling mode below a nominal vessel pressure of 0.93 MPaG.

The RHR heat exchanger capacity is required to be sufficient to meet each of these functional requirements. The limiting function for the RHR heat exchanger capacity is post-LOCA containment cooling. The heat exchanger capacity, K, is 370.5kJ/°C-s per heat exchanger.

The performance characteristics of the heat exchangers are shown in Table 5.4-4.

(3) Valves

All of the directional valves in the RHR System are conventional gate, globe, and check valves designed for nuclear service. The injection valves are high speed valves, as operation for RHR injection requires. Valve pressure ratings are to provide the control or isolation function as necessary (i.e., all vessel isolation valves are treated as Class 1 nuclear valves at the same pressure as the primary system).

(4) ECCS Portions of the RHR System

The ECCS portions of the RHR System include those sections that inject water into the reactor vessel.

The route includes suppression pool suction strainers, suction piping, RHR pumps, discharge piping, RHR heat exchangers, injection valves, and drywell piping into the vessel nozzles and core region of the reactor vessel.

Pool-cooling components include pool suction strainers, piping, pumps, heat exchangers, and pool return lines.

Containment spray components are the same as pool cooling components except that the spray headers replace the pool return lines.

5.4.7.2.3 Controls and Instrumentation

Controls and instrumentation for the RHR System are described in Section 7.3.

The relief valve for the RHR System (E11) are listed in Table 5.4-5 and the operating characteristics of each valve (i.e., their relieving pressure) are tabulated. The RHR relief valve is Quality Group B, Safety Class 2, and Seismic Category I. All of the relief valves in Table 5.4-5 are standard configurations meeting all applicable codes and standards. None of these valves is air operated nor can their setpoint be changed by the operators.

5.4.7.2.3.1 Interlocks

(1) The valves requiring a keylock switch are F001, F012, F029, and F014B, C as indicated on the RHR P&ID (Figure 5.4-10).

(2) It is not possible to open the shutdown connection to the vessel in any given loop whenever the pool suction, pool discharge valve or wetwell spray valves are open in the same loop to prevent draining the vessel to the pool.

(3) Redundant interlocks prevent opening the shutdown connections to and from the vessel whenever the pressure is above the shutdown range. Increasing pressure trip shall cause closure of these valves.

(4) A timer is provided in each pump minimum flow valve control circuitry so that the pump has an opportunity to attain rated speed and flow before automatic control of the valve is activated. This time delay is necessary to prevent a reactor water dump to the suppression pool during the shutdown operation.

(5) It is not possible to operate the RHR main pumps without an open suction source because these pumps are used for core, vessel and containment cooling and their integrity must be preserved.

(6) Redundant interlocks prevent opening and automatically closes the shutdown suction connections to the vessel in any given loop whenever a low reactor level signal is present.

(7) In the absence of a valid LOCA signal without high drywell pressure and without the injection valve being fully closed, it is not possible to open the drywell spray valves in a loop when the corresponding containment isolation valve in the same loop is open (i.e., the two valves, in series, are both not to be open during shutdown or surveillance testing).

5.4.7.2.3.2 Heat Exchanger Leak Detection

A radiation detector is provided in the main loop of the Reactor Building Cooling Water (RCW) System, which cools the secondary side of the RHR heat exchanger. If radioactive water from the primary side of the heat exchanger leaks to the secondary side, the radiation detector will signal a radiation increase soon after the RHR System is started. Conformation is achieved through a sample port on the specific RHR pipeline of the RCW System.

5.4.7.2.4 Applicable Codes and Classifications

(1) Piping, Pumps, and Valves

(a) Process side ASME III Class 1/2

(b) Service water side ASME III Class 3

(2) Heat Exchangers

(a) Process side ASME III Class 2

TEMA Class C

(b) Service water side ASME III Class 3

TEMA Class C

(3) Electrical Portions

(a) IEEE-279

(b) IEEE-308

5.4.7.2.5 Reliability Considerations

The RHR System has included the redundancy requirements of Subsection 5.4.7.1.5. Three completely redundant loops have been provided to remove residual heat, each powered from a separate emergency bus. All mechanical and electrical components are separate. Two out of three are capable of shutting down the reactor within a reasonable length of time.

5.4.7.2.6 Manual Action

(1) Emergency Mode [Low pressure flooder (LPFL) mode]

Each loop in the subsystem is initiated automatically by a low water level in the reactor vessel or high pressure in the drywell. Each loop in the system can also be placed in operation by means of a Manual Initiation pushbutton switch.

During the LPFL mode, water is initially pumped from the suppression pool and diverted through the minimum flow lines until the injection valve in the discharge line is signalled to open on low reactor pressure. As the injection valve opens on low reactor pressure, flow to the RPV comes from the suppression pool, through the RHR heat exchanger, and the injection valve. This creates a flow signal that closes the minimum flow line.

The system remains in the operating mode until manually stopped by the operator.

(2) Test Mode

Full flow functional testing of the RHR System can be performed during normal plant operation or during plan shutdown by manual operation of the RHR System from the control room. For plant testing during normal plant operation, the pump is started and the return line to the suppression pool is opened. A reverse sequence is used to terminate this test. Upon receipt of an automatic initiation signal while in the flow testing mode, the RHR System is returned to automatic control.

(3) Suppression Pool Cooling

The suppression cooling (SPC) mode of RHR can be initiated and stopped manually. The SPC mode removes heat released into the suppression pool, as necessary, following heat additions to the pool. During this mode of operation, water is pumped from the suppression pool through the RHR heat exchangers, and back to the suppression pool. This RHR SPC mode is also initiated automatically as described in Subsection 5.4.7.1.1.5.

(4) Wetwell and Drywell Spray Cooling

Two of the RHR loops provide containment spray cooling subsystems. Each subsystem provides both wetwell and drywell spray cooling. This subsystem provides steam condensation and primary containment atmospheric cooling following a LOCA by pumping water from the suppression pool, through the heat exchangers and into the wetwell and drywell spray spargers in the primary containment. The drywell spray mode is initiated by manual operator action post-LOCA in the presence of high drywell pressure. The wetwell spray mode is initiated as required by manual operator action. If the wetwell spray is operated without

drywell spray, it will be in conjunction with suppression pool cooling to achieve rated flow through the RHR heat exchanger for containment cooling. The drywell spray mode is terminated automatically following a LOCA signal as the injection valve opens, and the wetwell spray is terminated automatically by a LOCA signal. Both drywell and wetwell spray can be terminated manually by operator action with no permissive interlocks to be satisfied.

(5) Shutdown Cooling

The Shutdown Cooling Subsystem is manually activated by the operator following insertion of the control rods and normal blowdown to the main condenser. In this mode, the RHR System removes residual heat (decay and sensible) from the reactor vessel water at a rate sufficient to cool it to 60°C within 24 hours after the control rods are inserted. The subsystem can maintain or reduce this temperature further so that the reactor can be refueled and serviced.

Reactor water is cooled by pumping it directly from the reactor shutdown cooling nozzles, through the RHR heat exchangers, and back to the vessel (via feedwater on loop A and via the LPFL Subsystem on the other two loops).

This system is initiated and shut down by manual operator action.

(6) Fuel Pool Cooling

Two of the RHR loops provide supplemental fuel pool cooling during normal refueling activities and any time the fuel pool heat load exceeds the cooling capacity of the fuel pool heat exchangers. For normal refueling activities where the reactor well is flooded and the fuel pool gates are open, water is drawn from the reactor shutdown suction lines, pumped through the RHR heat exchangers and discharged through the reactor well distribution spargers. For 100% core removal, if necessary, water is drawn from the Fuel Pool Cooling (FPC) System skimmer surge tanks, pumped through the RHR heat exchangers and returned to the fuel pool via the FPC System cooling lines. These operations are initiated and shut down by operator action.

(7) Reactor Well and Equipment Pool Drain

The RHR System provides routing and connections for emptying the reactor well and equipment pool to the suppression pool after servicing. Water is pumped or drained by gravity through the FPC System return lines to the RHR shutdown suction lines and then to the suppression pool.

(8) AC-Independent Water Addition

The RHR System is provided with piping and valves which connect the RHR loop C pump discharge piping to the Fire Protection System (FPS) and to a reactor building external fire truck pump hookup. These connections allow for addition of FPS water to the reactor pressure vessel, or the drywell spray header or wetwell spray header during events when AC power is unavailable from both onsite and offsite sources. Operation of the RHR System in the AC-independent water addition mode (Alternating Current-independent) is entirely manual. All valves required to be opened or closed for operation are located within the same loop C ECCS valve room to provide ease of operation.

5.4.7.3 Performance Evaluation

RHR System performance depends on sizing its heat exchanger and pumping flow rate characteristics with enough capacity to satisfy the most limiting events. The worst case transient established the heat exchanger size, given the pumping flow of 954 m^3/h for each RHR loop. The shutdown cooling mode requirements were satisfied within the RHR characteristics established by the worst case transient.

5.4.7.3.1 Shutdown with All Components Available

A typical curve is not included to show vessel cooldown temperatures versus time because of the infinite variety of such curves that is possible due to: (1) clean steam systems that may allow the main condenser to be used as the heat sink when nuclear steam pressure is insufficient to maintain steam air ejector performance; (2) the condition of fouling of the exchangers; (3) operator use of one or two cooling loops; (4) coolant water temperature; and (5) system flushing time. Since the exchangers are designed for the fouled condition with relatively high service water temperature, the units have excess capability to cool when first cut in at high vessel temperature. Total flow and mix temperature must be controlled to avoid exceeding a 55°C/hour cooldown rate. See Subsection 5.4.7.1.1.7 for minimum shutdown time to reach 100°C.

5.4.7.3.2 Worst Case Transient

Several limiting events were considered for RHR heat exchanger sizing. Those events were:

(1) Feedwater line break (FWLB)

(2) Main steamline break

(3) Inadvertent opening of a relief valve

(4) Normal shutdown

(5) Emergency shutdown

(6) ATWS

It was determined for post-LOCA suppression pool temperature control, that the FWLB is the most limiting event. The worst case conditions for the event assumes one RHR heat exchanger failure instead of one diesel generator failure. When one heat exchanger fails, the heat generated by the pump is still added to the containment, and also one additional pump flow carries the reactor decay heat more effectively to the suppression pool. Therefore, a single failure of a RHR heat exchanger is the most limiting single failure.

The heat exchanger size was established to limit the suppression pool peak temperature to 97°C. This is acceptable to the ABWR for the following reasons:

(1) The ABWR wetwell pressure becomes high, high enough to provide more than 11°C subcooling with 97°C pool temperature when the peak pool temperature occurs.

(2) Because it takes 4 to 6 hours to reach the peak pool temperature, shutdown cooling will be initiated before the peak pool temperature. The energy release from the reactor will be controlled by the shutdown cooling system, and there is no need to release the reactor energy to the pool.

5.4.7.3.3 Emergency Shutdown Cooling

The design requirements for ABWR emergency shutdown cooling capability are specified in Regulatory Guide 1.139, as follows:

> The reactor Shutdown Cooling System (SDCS) should be capable of bringing the reactor to a cold shutdown condition within 36 hours following reactor shutdown with only offsite power or onsite power available, assuming the most limiting single failure.

The limiting condition is for the case with loss of offsite power which would disable the forced circulation. The most limiting single failure is the loss of one RHR division (designated as N-1 case). Therefore, for the emergency shutdown cooling purpose, one of the bases of RHR heat exchanger sizing is to meet the following requirements:

> The ABWR RHR in the shutdown cooling mode should be capable of bringing the reactor to cold shutdown conditions (100°C) within 36 hours following reactor shutdown for N-1 case, with only onsite power available.

The ABWR selected design configuration meets all design requirements and is consistent with the heat exchanger size required for post-LOCA pool temperature control.

5.4.7.3.4 Normal Shutdown Cooling

After a normal blowdown to the main condenser, the Shutdown Cooling Subsystem is activated. In this mode of operation, the RHR System shall be capable of removing enough

residual heat (decay and sensible) from the reactor vessel water to cool it to 60°C within 24 hours after the control rods are inserted.

Normal shutdown cooling is a non-safety-related event and is therefore analyzed assuming that all three RHR loops are operational.

The design heat exchanger capacity is sufficient to meet the normal shutdown cooling criteria.

5.4.7.4 Pre-operational Testing

The pre-operational test program and startup tests program discussed in Chapter 14 are used to generate data to verify the operational capabilities of each piece of equipment in the system, including each instrument, setpoint, logic element, pump, heat exchanger, valve, and limit switch. In addition, these programs verify the capabilities of the system to provide the flows, pressures, cooldown rates, and reaction times required to perform all system functions as specified for the system or component in the system data sheets and process data.

Logic elements are tested electrically; valves, pumps, controllers, and relief valves are tested mechanically. Finally, the system is tested for total system performance against the design requirements using both the offsite power and standby emergency power. Preliminary heat exchanger performance can be evaluated by operating in the pool cooling mode, but a vessel shutdown is required for the final check due to the small temperature differences available with pool cooling. Appendix 5B outlines RHR injection flow and heat capacity analyses.

5.4.8 Reactor Water Cleanup System

The Reactor Water Cleanup (CUW) System is classified as a primary power generation system, a part of which forms a portion of the reactor coolant pressure boundary (RCPB). The remaining portion of the system is not part of the RCPB because it can be isolated from the reactor. The CUW System may be operated at any time during normal reactor operations.

5.4.8.1 Design Basis

The CUW System performs the following functions:

(1) Removes solid and dissolved impurities from the reactor coolant and measures the reactor water conductivity in accordance with Regulatory Guide 1.56, “Maintenance of Water Purity in Boiling Water Reactors”.

(2) Provides containment isolation that places the major portion of the CUW system outside the RCPB, limiting the potential for significant release of radioactivity from the primary system to the secondary containment.

(3) Discharges excess reactor water during startup, shutdown, and hot standby conditions to the radwaste or main condenser.

(4) Provides full system flow to the RPV head spray as required for rapid RPV cooldown and rapid refueling.

(5) Minimizes RPV temperature gradients by maintaining circulation in the bottom head of the RPV during periods when the reactor internal pumps are unavailable.

The CUW System is automatically removed from service upon SLCS actuation. This isolation prevents the standby liquid reactivity control material from being removed from the reactor water by the cleanup system. The design of the CUW system is in accordance with Regulatory Guides 1.26 and 1.29.

5.4.8.2 System Description

The CUW System is a closed-loop system of piping, circulation pumps, a regenerative heat exchanger, non-regenerative heat exchangers, reactor water pressure boundary isolation valves, a reactor water sampling station, (part of the sampling system) and two precoated filter-demineralizers. During blowdown of reactor water swell, the loop is open to the radwaste or main condenser. The single loop has two parallel pumps taking common suction through a regenerative heat exchanger (RHX) and two parallel non-regenerative heat exchangers (NRHX) from both the single bottom head drain line and the shutdown cooling suction line of the RHR loop “B”. A bypass line around the filter-demineralizer (F/D) units is also provided (see system P&ID in Figure 5.4-12). The IBD is provided in Figure 5.4-14.

The total capacity of the system, as shown on the process flow diagram in Figure , is equivalent to 2% of rated feedwater flow. Each pump, NRHX, and F/D is capable of 50% system capacity operation, with the one RHX capable of 100% system capacity operation.

The operating temperature of the filter-demineralizer units is limited by the ion exchange resins; therefore, the reactor coolant must be cooled before being processed in the F/D units. The regenerative heat exchanger (RHX) transfers heat from the tubeside (hot process inlet) to the shellside (cold process return). The shellside flow returns to the reactor. The non-regenerative heat exchanger (NRHX) cools the process further by transferring heat to the Reactor Building Cooling Water System. A temperature sensor is provided at the outlet of the NRHX to monitor and automatically isolate the F/D units if the temperature goes above the high-high setpoint. High-high temperature condition is also annunciated in the main control room. Following the high temperature isolation, the F/D bypass valve is automatically opened.

The F/D design is vendor specific. A typical design of the filter-demineralizer is discussed below. The F/D units are pressure precoat-type filters using powdered ion-exchange resins. Spent resins are not regenerated and are sluiced from the F/D unit to a backwash receiving tank from which they are transferred to the radwaste system for processing and disposal. To prevent resins from entering the reactor in the event of failure of a F/D resin support, a strainer is installed on the F/D unit. Each strainer and F/D vessel has a control room alarm that is energized

by high differential pressure. Upon further increase in differential pressure from the alarm point, the filter demineralizer will automatically isolate.

The backwash and precoat cycle for a F/D unit is automatic to minimize the need for operator intervention. The F/D piping configuration is arranged such that resin transfer is complete and resin traps are eliminated.

In the event of low flow or loss of flow in the system, the precoat is maintained on the septa by a holding pump. Sample points are provided in the common influent header and in each effluent line of the F/D units for continuous indication and recording of system conductivity. High conductivity is annunciated in the control room. The influent sample point is also used as the normal source of reactor coolant grab samples. Sample analysis also indicates the effectiveness of the F/D units.

Each F/D vessel is installed in an individual shielded compartment. The compartments do not require accessibility during operation of the F/D unit. Shielding is required due to the concentration of radioactive products in the F/D process system. Service space is provided for the filter-demineralizer for septa removal. All inlet, outlet, vent, drain, and other process valves are located outside the F/D compartment in a separate shielded area, together with the necessary piping, strainers, holding pumps and instrument elements. Process equipment and controls are arranged so that all normal operations are conducted at the panel from outside the vessel or valve and pump compartment shielding walls. Access to the F/D compartment is normally permitted only after removal of the precoat. Penetrations through compartment walls are located so as not to compromise radiation shielding requirements. Primarily, this affects nozzle locations on tanks so that wall penetrations do not “see” the tanks. Generally, this means piping through compartment walls are above, below, or to the side of F/D units. The local control panel is outside the vessel compartment and process valve cell, located convenient to the CUW System. The tank which receives backwash is located in a separate shielded room below the F/D units.

The F/D vents are piped to the backwash receiving tank. Piping vents and drains are directed to low conductivity collection in radwaste. System pressure relief valves are piped to radwaste (see Figure 5.4-12 for a typical configuration).

The suction line (RCPB portion) of the CUW System contains two motor-operated containment isolation valves which automatically close in response to signals from the LDS. LDS isolation signal for CUW consists of low reactor water level, high ambient main steam tunnel area temperature, high mass differential flow, high ambient CUW equipment area temperature, and activation of SLCS pump. Subsection 7.3.1.1.2 also describes the above isolation signals and are summarized in Table 5.2-6. This isolation prevents (1) loss of reactor coolant and release of radioactive material from the reactor, and (2) removal of liquid reactivity control material by the cleanup system should the SLCS be in operation. The RCPB isolation valves may be remote manually operated to isolate the system equipment for maintenance or servicing. Discussion of the RCPB is provided in Section 5.2.

A motor-operated valve, actuated by the LDS, on the return line to the feedwater lines provides long term leakage control. Instantaneous reverse flow isolation is provided by check valves in the CUW piping and feedwater line connection inside the steam tunnel.

CUW System operation is controlled from the main control room. Filter-demineralizing operations, which include backwashing and precoating, are controlled automatically from a process controller or manually from a local panel.

5.4.8.3 System Evaluation

The CUW System, in conjunction with the condensate treatment system and the FPCC System, maintains reactor water quality during all reactor operating modes (normal, hot standby, startup, shutdown, and refueling).

The CUW System has process interfaces with the RHR, control rod drive, nuclear boiler, radwaste, fuel pool cooling and cleanup (FPC), reactor building cooling water systems, RPV, and main condenser. The CUW suction is from the RHR “B” shutdown suction line and the RPV bottom head drain. The CUW main suction line is provided with a flow restrictor inside containment for flow monitoring and break flow restricting functions. The flow restrictor has a maximum throat diameter of 135 mm. A remote manually-operated shutoff valve (not a containment isolation valve) is also provided at the CUW suction line upstream of the containment valves. The RPV bottom head drain line is connected to the CUW main suction line by a “tee”. The center line of the “tee” connection is at an elevation of at least 460 mm above the center line of the variable leg nozzle of the RPV wide range water level instrument (or at least 389 mm above the top of active fuel). In the unlikely event of unisolated CUW line break the CUW suction shutoff valve will be used to isolate the break. If unsuccessful, the RPV water level will be maintained at the elevation of the “tee” connection. A more detailed discussion regarding CUW unisolated line break is provided in Section 19.9.1. The CUW System main process pump motor cavities are purged by water from the CRD System. CUW System return flow is directed to either the NBS (feedwater lines), directly to the RPV through the RPV head spray, main condenser or radwaste through the CUW dump line. CUW F/D backwash is to the backwash receiving tank (BWRT) located in the FPC (BWRT accommodates backwash from the CUW, the FPC, and the Suppression Pool Cleanup Systems). The NRHX is cooled by the Reactor Building Cooling Water (RCW) System. Other utility or support interfaces exist with the instrument air system and the condensate and plant air systems for the F/D backwash.

The type of pressure precoat cleanup system used in this system was first put into operation in 1971 and has been in use in all BWR plants brought online since then. Operating plant experience has shown that the CUW System, designed in accordance with these criteria, provides the required BWR water quality. The ABWR CUW System capacity has been increased to a nominal of 2% of rated feedwater from the original 1% size. This added capacity provides additional margin against primary system intrusions and component availability. The NHRX is sized to maintain the required process temperature for 100% system flow. During periods of water rejection to the main condenser or radwaste, CUW System flow may be

reduced slightly to compensate for the loss of cooling flow through the RPV return side of the RHX.

The CUW System is classified as a non-safety system. The RCPB isolation valves are classified as safety-related. System piping and components within the drywell, up to and including the outboard containment isolation valves, and interconnecting piping assembly, are Seismic Category I, Quality Group A. All other non-safety equipment is designed as Nonseismic, Quality Group C. Low pressure piping in the backwash and precoat area downstream of the high pressure block valves is designed to Quality Group D.

The carbon steel portion of the CUW piping will be CS-SA-333-Grade 6 material. This material is subject to ASME Code requirements and the material will be tested for nil ductility to -10°C. Refer also to Subsection 5.2.3.3.1 for fracture toughness testing requirements.

The CUW System containment isolation valves will be designed and tested to meet closure requirements under full flow, maximum blowdown differential pressure break configuration and flow instability conditions.

The manufacturer will be required to conduct factory or valve test lab demonstration test prior to their use in the plant.

The CUW System valving configurations between the system pump discharge piping and connections to the feedwater system will be designed and installed for various break locations. Specifically, breaks in the MS tunnel or in the system equipment compartment coincident with single active component failures (e.g. check valve failures) will not result in feedwater reverse flow into the CUW System compartments.

The CUW containment isolation valves power supplies are listed in Table 6.2-7. Each of the two CUW pumps receives its power from separate plant investment protection (PIP) buses, as depicted in Figure 8.3-1. Power to the CUW differential sensors is addressed in Section 7.3.1.1.2. All other CUW components receive power from their respective non-Class 1E load groups (i.e., from bus A or Bus B as appropriate).

A tabulation of CUW System equipment data, including temperature pressure and flow capacity, is provided in Table 5.4-6.

The CUW containment isolation valves power supplies are listed in Table 6.2-7. Each of the two CUW pumps receives its power from separate plant investment protection (PIP) buses, as depicted in Figure 8.3-1. Power to the CUW differential sensors is addressed in Section 7.3.1.1.2. All other CUW components receive power from their respective non-Class 1E load groups (i.e., from Bus A or Bus B as appropriate).

5.4.9 Main Steamlines and Feedwater Piping

5.4.9.1 Safety Design Bases

In order to satisfy the safety design bases, the main steam and feedwater lines are designed as follows:

(1) The main steam, feedwater, and associated drain lines are protected from potential damage due to fluid jets, missiles, reaction forces, pressures, and temperatures resulting from pipe breaks.

(2) The main steam, feedwater, and drain lines are designed to accommodate stresses from internal pressures and earthquake loads without a failure that could lead to the release of radioactivity in excess of the guideline values in published regulations.

(3) The main steam and feedwater lines are accessible for inservice testing and inspection.

(4) The main steamlines are analyzed for dynamic loadings due to fast closure of the turbine stop valves.

(5) The main steam and feedwater piping from the reactor through the seismic interface restraint is designed as Seismic Category I.

(6) The main steam and feedwater piping and smaller connected lines are designed in accordance with the requirements of Table 3.2-1.

5.4.9.2 Power Generation Design Bases

(1) The main steamlines are designed to conduct steam from the reactor vessel over the full range of reactor power operation.

(2) The feedwater lines are designed to conduct water to the reactor vessel over the full range of reactor power operation.

5.4.9.3 Description

The main steam piping is described in Section 10.3. The main steam and feedwater piping from the reactor through the containment isolation interfaces is diagrammed in Figure 5.1-3.

As discussed in Table 3.2-1 and shown in Figure 5.1-3, the main steamlines are Quality Group A from the reactor vessel out to and including the outboard MSIV and Quality Group B from the outboard MSIVs to the turbine stop valve. They are also Seismic Category I only from the reactor pressure vessel out to the seismic interface restraint.

The feedwater piping consists of two 550A diameter lines from the feedwater supply header to the reactor. On each of the feedwater lines from the common feedwater supply header, there shall be a seismic interface restraint. The seismic interface restraint shall serve as the boundary between the Seismic Category I piping and the non-seismic piping. Downstream of the seismic restraint, there is a remote manual, motor-operated valve powered by a non-safety-grade bus. These motor-operated valves serve as the shutoff valves for the feedwater lines. Isolation of each line is accomplished by two containment isolation valves, consisting of one check valve inside the drywell and one positive closing check valve outside the containment (Figure 5.1-3). The closing check valve outside the containment is a spring-closing check valve that is held open by air. These check valves will be qualified to withstand the dynamic effects of a feedwater line break outside containment. Inside the containment, downstream of the inboard FW line check valve, there is a manual maintenance valve (B21-F005).

The design temperature and pressure of the feedwater line is the same as that of the reactor inlet nozzle (i.e., 8.62 MPa and 302°C) for turbine-driven feedwater pumps.

As discussed in Table 3.2-1 and shown in Figure 5.1-3, the feedwater piping is Quality Group A from the reactor pressure vessel out to, and including, the outboard isolation valve, Quality Group B from the outboard isolation valve to and including the shutoff valve, and Quality Group D beyond the shutoff valve. The feedwater piping and all connected piping of 65A and larger size is Seismic Category I only from the reactor pressure vessel out to, and including, the seismic interface restraint.

The materials used in the piping are in accordance with the applicable design code and supplementary requirements described in Section 3.2. The valve between the outboard isolation valve and the shutoff valve upstream of the RHR entry to the feedwater line is to effect a closed loop outside containment (CLOC) for containment bypass leakage control (Subsections 6.2.6 and 6.5.3).

The general requirements of the feedwater system are described in Subsections 7.7.1.1, 7.7.1.4, 7.7.2.4, and 10.4.7.

5.4.9.4 Safety Evaluation

Differential pressure on reactor internals under the assumed accident condition of a ruptured steamline is limited by the use of flow restrictors and by the use of four main steamlines. All main steam and feedwater piping will be designed in accordance with the requirements defined in Section 3.2. Design of the piping in accordance with these requirements ensures meeting the safety design bases.

5.4.9.5 Inspection and Testing

Testing is carried out in accordance with Subsection 3.9.6 and Chapter 14. Inservice inspection is considered in the design of the main steam and feedwater piping. This consideration assures adequate working space and access for the inspection of selected components.

5.4.10 Pressurizer

Not applicable to BWR.

5.4.11 Pressurizer Relief Discharge System

Not applicable to BWR.

5.4.12 Valves

5.4.12.1 Safety Design Bases

Line valves, such as gate, globe, and check valves, are located in the fluid systems to perform a mechanical function. Valves are components of the system pressure boundary and, having moving parts, are designed to operate efficiently to maintain the integrity of this boundary.

The valves operate under the internal pressure/temperature loading as well as the external loading experienced during the various system transient operating conditions. The design criteria, the design loading, and acceptability criteria are as specified in Subsection 3.9.3 for ASME Class 1, 2, and 3 valves. Compliance with the ASME Code is discussed in Subsection 5.2.1.

5.4.12.2 Description

Line valves are manufactured standard types designed and constructed in accordance with the requirements of ASME Code Section III for Class 1, 2, and 3 valves. All materials, exclusive of seals, packing, and wearing components, shall endure the 60-year plant life under the environmental conditions applicable to the particular system when appropriate maintenance is periodically performed.

Power operators will be sized to operate successfully under the maximum differential pressure determined in the design specification.

5.4.12.3 Safety Evaluation

Line valves will be shop tested by the manufacturer for performability. Pressure-retaining parts are subject to the testing and examination requirements of Section III of the ASME Code. To minimize internal and external leakage past seating surfaces, maximum allowable leakage rates are stated in the design specifications for both back seat as well as the main seat for gate and globe valves.

Valve construction materials are compatible with the maximum anticipated radiation dosage for the service life of the valves.

5.4.12.4 Inspection and Testing

Valves serving as containment isolation valves which must remain closed or open during normal plant operation may be partially exercised during this period to assure their operability at the time of an emergency or faulted condition. Other valves, serving as a system block or throttling valves, may be exercised when appropriate.

Leakage from critical valve stems is monitored by use of double-packed stuffing boxes with an intermediate lantern leakoff connection for detection and measurement of leakage rates.

Motors used with valve actuators will be furnished in accordance with applicable industry standards. Each motor actuator will be assembled, factory tested, and adjusted on the valve for proper operation, position, torque switch setting, position transmitter function (where applicable), and speed requirements. Valves will be tested to demonstrate adequate stem thrust (or torque) capability to open or close the valve within the specified time at specified differential pressure. Tests will verify no mechanical damage to valve components during full stroking of the valve. Suppliers will be required to furnish assurance of acceptability of equipment for the intended service based on any combination of:

(1) Test stand data

(2) Prior field performance

(3) Prototype testing

(4) Engineering analysis

Pre-operational and operational testing performed on the installed valves consists of total circuit checkout and performance tests to verify speed requirements at specified differential pressure.

5.4.13 Safety/Relief Valves

The reactor component and subsystem SRVs are listed in Table 5.4-5. The RHR relief valve is discussed separately in Subsection 5.4.7.1.3.

5.4.13.1 Safety Design Bases

Overpressure protection is provided at isolatable portions of the SLC, RHR, HPCF, and RCIC Systems. The relief valves will be selected in accordance with the rules set forth in the ASME Code Section III, Class 1, 2, and 3 components. Other applicable sections of the ASME Code, as well as ANSI, API, and ASTM Codes, will be followed.

5.4.13.2 Description

Pressure relief valves have been designed and constructed in accordance with the same Code class as that of the line valves in the system.

Table 3.2-1 lists the applicable Code classes for valves. The design criteria, design loading, and design procedure are described in Subsection 3.9.3.

5.4.13.3 Safety Evaluation

The use of pressure-relieving devices will assure that overpressure will not exceed 10% above the design pressure of the system. The number of pressure-relieving devices on a system or portion of a system has been determined on this basis.

5.4.14 Component Supports

Support elements are provided for those components included in the RCPB and the connected systems.

5.4.14.1 Safety Design Bases

Design loading combinations, design procedures, and acceptability criteria are as described in Subsection 3.9.3. Flexibility calculations and seismic analysis for Class 1, 2, and 3 components are to be confirmed with the appropriate requirements of ASME Code Section III.

Support types and materials used for fabricated support elements are to conform with Sections NF-2000 and NF-3000 of ASME Code Section III. Pipe support spacing guidelines of Table NF-3611-1 in ASME Code Section III, are to be followed.

5.4.14.2 Description

The use and the location of rigid-type supports, variable or constant spring-type supports, snubbers, and anchors or guides are to be determined by flexibility and seismic/dynamic stress analyses. Component support elements are manufacturer standard items. Direct weldment to thin wall pipe is to be avoided where possible.

5.4.14.3 Safety Evaluation

The flexibility and seismic/dynamic analyses to be performed for the design of adequate component support systems include all temporary and transient loading conditions expected by each component. Provisions are to be made to provide spring-type supports for the initial dead weight loading due to hydrostatic testing of steam systems to prevent damage to this type support.

5.4.14.4 Inspection and Testing

After completion of the installation of a support system, all hangers and snubbers are to be visually examined to assure that they are in correct adjustment to their cold setting position.

Upon hot startup operations (Subsection 3.9.2.1.2), thermal growth will be observed to confirm that spring-type hangers will function properly between their hot and cold setting positions. Final adjustment capability is provided on all hangers and snubbers. Weld inspections and standards are to be in accordance with ASME Code Section III. Welder qualifications and welding procedures are in accordance with ASME Code Section IX and NF-4300 of ASME Code Section III.

5.4.15 COL License Information

5.4.15.1 Testing of Main Steam Isolation Valves

COL applicants will test the steam isolation valves in actual operating conditions (6.87 MPaG, 286°C).

5.4.15.2 Analysis of Non-Design Basis Loss of AC Coping Capability

5.4.15.2.1 Analysis to Demonstrate the Facility Has 8 Hour Non-Design SBO Capability

COL applicants shall provide the analyses for the as-built facility to demonstrate that the facility has the 8-hour non-design basis SBO capability discussed in Subsection 5.4.6. These analyses will utilize realistic, best-estimate assumptions and analysis methods. The analyses will consider:

- capability of the Class 1E DC power supply systems
- capacity of the RCIC water supply sources
- ability of required equipment to survive high temperature conditions in the region of the Reactor Building housing the RCIC equipment.

These evaluations will be documented in an RCIC Eight Hour Station Blackout Capability report.

5.4.15.2.2 Analysis to Demonstrate That the DC Batteries and SRV/ADS Pneumatics Have Sufficient Capacity

COL applicants shall provide the analyses for the as-built facility to demonstrate that the DC batteries and SRV/ADS pneumatics have sufficient capacity to open and maintain open SRVs necessary to depressurize the reactor coolant system (RCS) following RCIC failure due to battery failure (at about 8 hours) so that the ACIWA can inject to the core.

5.4.15.3 ACIWA Flow Reduction

The COL applicant shall perform an analysis to determine if a flow reduction device is required as specified in Subsection 5.4.7.1.1.10.3.

5.4.15.4 RIP Installation and Verification During Maintenance

The COL applicant shall develop procedures to ensure appropriate installation and verification of motor bottom cover, as well as visual monitoring of the potential leakage during impeller-shaft and maintenance plug removal have been considered. In addition, the COL applicant shall develop a contingency plan (e.g., close personnel access hatch, safety injection) which assures that core and spent fuel cooling can be provided in the event that a loss of coolant occurs during RIP maintenance.

5.4.16 References

5.4-1 "Design and Performance of General Electric Boiling Water Reactor Main Steamline Isolation Valves", General Electric Co., Atomic Power Equipment Department, March 1969 (APED-5750).

Table 5.4-1 Reactor Recirculation System Design Characteristics

Number of Reactor Internal Pumps (RIP) and Heat Exchangers–10

RIP Motor Housing and Heat Exchanger Shell	
Internal Design Pressure	8.62 MPaG
Internal Design Temperature	302°C
RIP Motor Heat Exchanger Tubes	
Design Pressure	
External	8.62 MPaG
Internal	1.37 MPaG
Design Temperature	
External	302°C
Internal	70°C

Single RIP Parameters at Rated Reactor Power and Rated Core Flow given below:

Pump	**10 RIPs Operating**	**9 RIPs Operating**
Flow (10^3 m^3/h)	6,912	8,291
Flow (10^6 kg/hr)	5.22	6.26
Total Developed Head (m)	32.6	35.8
Suction Pressure (MPaA)	7.25	7.25
Required NPSH (m)	5.6	10.2
Available NPSH (m)	134	134
Water Temperature (max °C)	278	278
Pump Brake Horsepower (MW)	~0.590	~0.777
Motor		
Motor Type	Wet Induction	
Rated Speed (rad/s)	~141.4	~157.1
Minimum Speed (rad/s)	47.1	47.1
Phase	3	3
Frequency (Hz) variable	0-50	0-50
Rotational Inertia (kg·m)	17.5-26.5	17.5-26.5
Rated Voltage	~3.3 kV	~3.3 kV

Table 5.4-1a Net Positive Suction Head (NPSH) Available to RCIC Pumps

A Suppression pool is at its minimum depth, El. –3740 mm.

B. Centerline of pump suction* is at El. –7200 mm.

C. Suppression pool water is at its maximum temperature for the given operating mode, 77°C.

D. Pressure is atmospheric above the suppression pool.

E. Minimum suction strainer area as committed to by Appendix 6C methods.

NPSH available = $H_{ATM} + H_S - H_{VAP} - H_F$

where:

H_{ATM}	=	Atmospheric head
H_S	=	Static head
H_{VAP}	=	Vapor pressure head
H_F	=	Maximum frictional head including strainer

Minimum Expected NPSH
RCIC pump flow is 182 m^3/h

Maximum suppression pool temperature is 77°C

H_{ATM}	=	10.62m
H_S	=	3.46m
H_{VAP}	=	4.33m
H_F	=	2.10m

NPSH available = 10.26 + 3.46 – 4.33 – 2.10 = 7.65m

NPSH required = 7.3m

Margin = 0.35m = $NPSH_{available} - NPSH_{required}$

* NPSH Reference Point

Table 5.4-2 Design Parameters for RCIC System Components

(1) RCIC Pump Operation (C001)		
Flow rate	Injection flow – 182 m^3/h	
	Cooling water flow – 4 to 6 m^3/h	
	Total pump discharge – 188 m^3/h (includes no margin for pump wear)	
Water temperature range	10° to 60°C, continuous duty 40° to 77°C, short duty	
NPSH	7.3m minimum	
Developed head	900m at 8.22 MPaA reactor pressure	
	186 m at 1.14 MPaA reactor pressure	
Maximum pump shaft power	675 kW at 900m developed head 125 kW at 186m developed head	
Design pressure	11.77 MPaG	
(2) RCIC Turbine Operation (C002)		
	High Pressure Condition	Low Pressure Condition
Reactor pressure (saturated temperature)	8.19 MPaA	1.14 MPaA
Steam inlet pressure	8.12 MPaA, minimum	1.03 MPaA, minimum
Turbine exhaust pressure	0.11 to 0.18 MPaA, maximum	0.11 to 0.18 MPaA, maximum
Design inlet pressure	8.62 MPaG at saturated temperature	
Design exhaust pressure	8.62 MPaG at saturated temperature	
(3) RCIC leakoff orifices (D017, D018)	Sized for 3.2 mm diameter minimum to 4.8 mm diameter maximum	
Flow element (FE007)		
Flow at full meter differential pressure	250 m^3/h	
Normal temperature	10 to 77°C	
System design pressure/temperature	8.62 MPaG/302°C	
Maximum unrecoverable loss at normal flow	0.031 MPa	
Installed combined accuracy (Flow element, Flow transmitter and Flow indicator)	±2.5% at normal flow and normal	

Table 5.4-2 Design Parameters for RCIC System Components (Continued)

(4) Valve Operation Requirements	
Steam supply valve (F037)	Open and/or close against full differential pressure of 8.12 MPa within 15 seconds
Pump discharge valve (F004)	Open and/or close against full differential pressure of 9.65 MPa within 15 seconds
Pump minimum flow bypass valve (F011)	Open and/or close against full differential pressure of 9.65 MPa within 5 seconds
RCIC steam isolation valve (F035&F036)	Open and/or close against full differential pressure of 8.12 MPa within 30 seconds
Cooling water pressure control valve (F013)	Self-contained downstream sensing control valve capable of maintaining constant downstream pressure of 0.52 MPa
Pump suction relief valve (F017)	1.48 MPaA setting; 2.3 m^3/h at 10% accumulation
Cooling water relief valve (F030)	Sized to prevent overpressuring piping, valves, and equipment in the coolant loop in the event of failure of pressure control valve F013
Pump test return valve (F008)	Capable of throttling control against differential pressures up to 7.58 MPa and closure against differential pressure at 9.65 MPa
Pump suction valve, suppression pool (F006)	Capable of opening and closing against 1.37 MPa differential pressure
Testable check valve equalizing valve (F026)	Open and/or close against full differential pressure of 8.12 MPa
Outboard check valve (F005)	Accessible during plant operation and capable of local testing
Turbine exhaust isolation valve (F039)	Opens and/or closes against 1.10 MPa differential pressure at a temperature of 170°C, physically located in the line on a horizontal run as close to the containment as practical
Isolation valve, steam warmup line (F048)	Opens and/or closes against differential pressure of 8.12 MPa
Barometric condenser condensate drain Line isolation valves (F031 & F032)	These valves operate only when RCIC System is shutdown, allowing drainage to CUW System and they must operate against a differential pressure of 0.52 MPa
Condensate storage tank isolation valve (F001)	This valve isolates the condensate storage tank so that suction may be drawn from the suppression pool; valve must operate against a differential pressure of 1.37 MPa

Table 5.4-2 Design Parameters for RCIC System Components (Continued)

Vacuum breaker check valves (F054 & F055)	Full flow and open with a minimum pressure drop (less than 3.92 kPa across the valves)
Steam inlet drain pot system isolation (F040 & F041)	These valves allow for drainage of the steam inlet drain pot and must operate against a differential pressure of 8.12 kPa
Steam inlet trip bypass valve (F058)	This valve bypasses the trap D008 and must operate against a differential pressure of 8.12 kPa
Cooling loop shutoff valve (F012)	This valve allows water to be passed through the auxiliary equipment coolant loop and must operate against a differential pressure of 9.65 MPa
Pump test return valve (F009)	This valve allows water to be returned to the suppression pool during RCIC system test and must operate against a differential pressure of 9.65 MPa
Steam supply bypass valve (F045)	Open and/or close against full differential of 8.12 MPa within 5 seconds
Turbine exhaust check valve (F038)	Capable of with standing impact loads due to “flapping” during startup.
Vacuum pump discharge isolation valve (F047)	Open and/or close against 0.314 MPa differential pressure at a temperature of 170°C.
Vacuum pump discharge check valve (F046)	Located at the highest point in the line.

(5) Instrumentation – For instruments and control definition, refer to Subsection 7.4.1.1.

(6) Condensate Storage Requirements

Total reserve storage for RCIC and HPCF System is 570 m^3.

(7) Piping RCIC Water Temperature
The maximum water temperature range for continuous system operation shall not exceed 60°C; however, due to potential short-term operation at higher temperatures, piping expansion calculations were based on 77°C.

(8) Turbine Exhaust Vertical Reactor Force
The turbine exhaust sparger is capable of withstanding a vertical pressure unbalance of 0.137 MPa. This pressure unbalance is due to turbine steam discharge below the suppression pool water level.

(9) Ambient Conditions	Relative Temperature	Humidity(%)
Normal plant operation	10 to 40°C	10 to 90

(10) Suction Strainer Sizing

The suppression pool suction shall be sized so that:

(a) Pump NPSH requirements are satisfied when strainer is 50% plugged; and particles over 2.4 mm diameter are restrained from passage into the pump and feedwater sparger.

Table 5.4-3 RHR Pump/Valve Logic

Valve Number	Valve Function	Normal Position	Automatic Logic or Permissives		
			Condition	Automatic Action	
C001 A,B,C	N/A	Stopped	Note A	Start	Automatic start also requires adequate bus power permissive and employs time delays as necessary to load standby power sources.
F001 A,B,C	Pump Suction Valves	Open			Permissives: To open requires F012 to be fully closed.
F012 A,B,C	Shutdown Suction Isolation Valves	Closed			Permissive: To open requires F001, F008, F018B, C, and F019B, C to be fully closed.
F004 A,B,C	Hx Tube Side Outlet Valves	Open	Note A	Open	
F013 A,B,C	Hx Bypass Valves	Closed	Note A	Close	
F010 A,B,C	Inboard Shutdown Cooling Suction Isolation	Closed	Note B	Close	To prevent the reactor from draining or filling.
F011 A,B,C	Outboard Shutdown Cooling Suction Isolation	Closed	Note B	Close	To prevent the reactor from draining or filling.
F008 A,B,C	S/P Return Valves	Closed	Note F Note G	Close Open	Permissive: To open requires F005 and F012 to be fully closed.
F021 A,B,C	Minimum Flow Valves	Open	Note C Note J	Open Close	
F005 A,B,C	Low Pressure Flooder Injection Valves	Closed	Note F Note G	Open Close	With low reactor pressure permissive of 3.01 MPaG.
F017 B,C	Drywell Spray Valves	Closed	Note D	Close	Permissive: To open requires high drywell pressure and F005 fully closed, or to open for test requires F018 fully closed.
F018 B,C	Drywell Spray Isolation Valves	Closed	Note H	Close	Permissive: To open requires high drywell pressure and F005 fully closed, or to open fully requires F017 fully closed.

Table 5.4-3 RHR Pump/Valve Logic (Continued)

Valve Number	Valve Function	Normal Position	Automatic Logic or Permissives		
			Condition	Automatic Action	
F019 B,C	Wetwell Spray Isolation Valves	Closed	Note A	Close	Permissive: To open requires F012 fully closed and either the absence of LOCA or F005 fully closed.
F006 A,B,C	Testable Check Valve	Closed			Permissive: To open for test requires F005 fully closed and F036, warmup valve, fully open.
C002	N/A	Run	Note A	Stop	
F029 A,B,C	Liquid Waste Flush Valve	Closed	Note E	Close	
F030 A,B,C	Liquid Waste Flush Valve	Closed	Note E	Close	

NOTES:

A. LOCA signal or high suppression pool temperature.

B. Low reactor water level (L3) or high vessel pressure or RHR equipment area high temperature trip.

C. Pump is running and low loop flow signal.

D. LOCA condition as indicated by a not-fully-closed injection valve F005, or high suppression pool temperature.

E. Low Reactor water level (L3) or high drywell pressure.

F. LOCA signal of low reactor water level (L1) or high drywell pressure.

G. High suppression pool temperature.

H. LOCA condition as indicated by a not-fully-closed injection valve F005.

J. High loop flow signal.

Table 5.4-4 RHR Heat Exchanger Design and Performance Data

Number of units	3
Seismic	Category I design and analysis
Types of exchangers	Horizontal U-Tube/Shell
Maximum Pressure Primary side Secondary side	 3.43 MPaG 1.37 MPaG
Design Point Function	Post-LOCA Containment
Primary side (tube side) performance data	
(1) Flow	954 m^3/h
(2) Inlet temperature	182°C maximum
(3) Allowable pressure drop (max)	0.069 MPa
(4) Type water	Suppression Pool or Reactor Water
(5) Fouling factor	$2.446 \times 10^{-5} m^2 h°C/kJ$
Secondary side (shell side) performance data	
(1) Flow	1200 m^3/h
(2) Inlet temperature	37.8°C
(3) Allowable pressure drop maximum	0.069 MPa
(4) Type water	Reactor Building Cooling
(5) Fouling factor	$2.446 \times 10^{-5} m^2 h°C/kJ$

Table 5.4-5 Component and Subsystem Relief Valves

MPL No.	Service	Relief Route*	Relief Pressure (MPaG)	Relief Flow (m^3/h)
C12-F004A-B	Condensate	B	1.37	
C12-F018	Condensate	B	1.37	
C41-F038A-B	SLC Liquid	C	10.76	
C41-F014	SLC Liquid	A	1.37	
E11-F028A-C	Reactor Water	A	3.44	
E11-F039A-C	Reactor Water	E	8.62	
E11-F042A-C	Reactor Water	A	1.37	
E11-F051A-C	Reactor Water	A	3.44	
E22-F020B-C	Condensate	A	1.37	2.3
E51-F017	Condensate	B	1.37	2.3
G31-F020	Reactor Water	G	10.00	
G31-F031A-B	Condensate	G	8.83	

* A—Suppression pool
B—Equipment drain sump
C—SLCS pump suction
D—Reactor vessel
E—Across a valve to same line
F—Floor drain sump
G—LCW collector tank

Table 5.4-6 Reactor Water Cleanup System Equipment Design Data

Pumps		
System Flow Rate (kg/h)	152,500	
Type	Vertical Sealless centrifugal pump	
Number Required	2	
Capacity (% of CUW System flow each)	50	
Design Temperature (°C)	66	
Design pressure (MPaG)	10.20	
Discharge head at shutoff (m)	160	
Heat Exchangers	**Regenerative**	**Nonregenerative**
Number Required	1 (3 shells per unit)	2 (2 shells per unit)
Capacity (% CUW System flow each)	100	50
Shell design pressure (MPaG)	10.20	1.37
Shell design temperature (°C)	302	85
Tube design pressure (MPaG)	8.83	8.83
Tube design temperature (°C)	302	302
Type	Horizontal U-tube	Horizontal U-tube
Exchange Capacity (kJ/h) (per unit)	1.15×10^8	2.01×10^7
Filter-Demineralizers		
Type	pressure precoat	
Number Required	2	
Capacity (% of CUW System flow each)	50	
Flow rate per unit (kg/h)	76,250	
Design Temperature (°C)	66	
Design pressure (MPaG)	10.20	
Linear velocity (m/h)	~2.5	
Differential Pressures (MPa)		
Clean	0.034	
Annunciate	0.17	
Backwash	0.21	
Containment Isolation Valves		
Closing time (s)	<30	
Maximum differential pressure (MPa)	8.62	

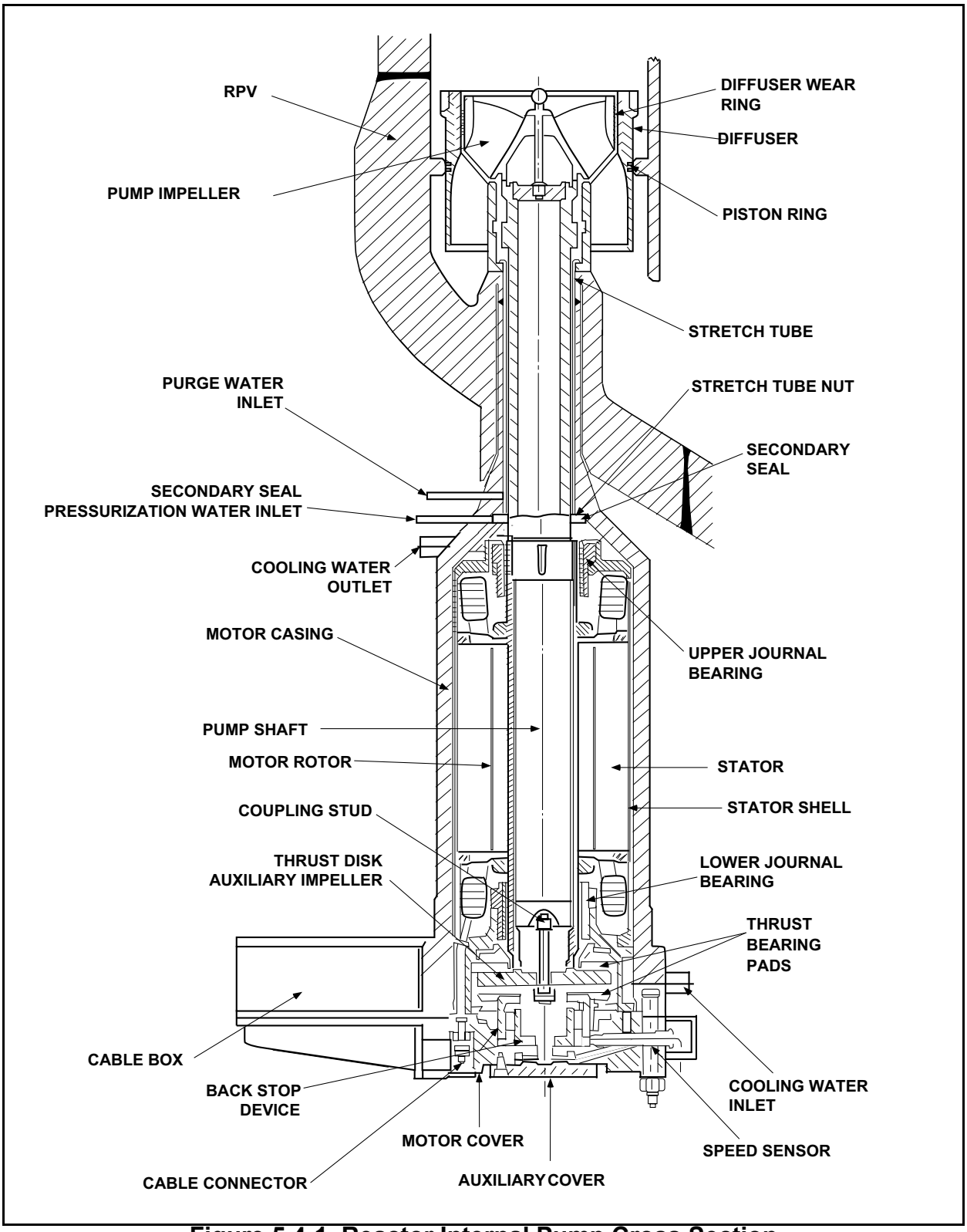

Figure 5.4-1 Reactor Internal Pump Cross Section

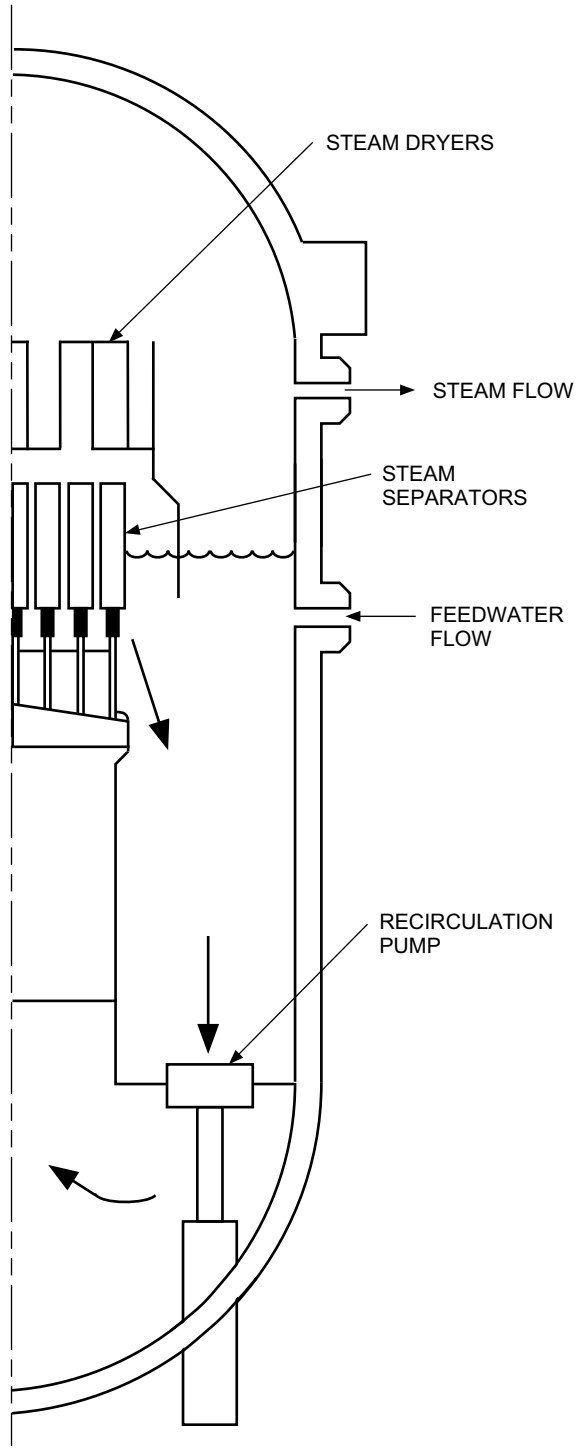

Figure 5.4-2 ABWR Recirculation Flow Path

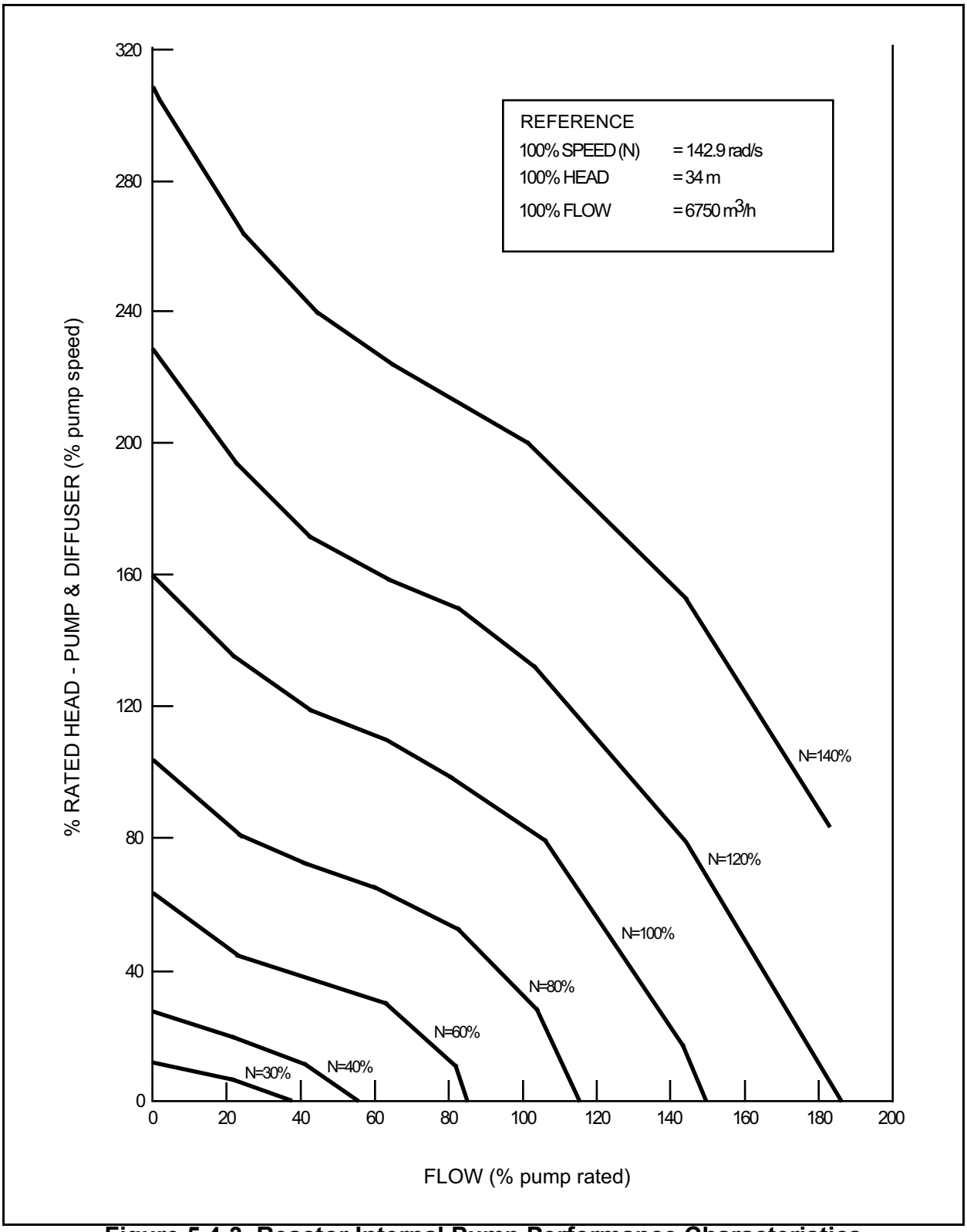

Figure 5.4-3 Reactor Internal Pump Performance Characteristics

The following figures are located in Chapter 21:

Figure 5.4-4 Reactor Recirculation System P&ID (Sheets 1-2)

Figure 5.4-5 Reactor Recirculation System PFD

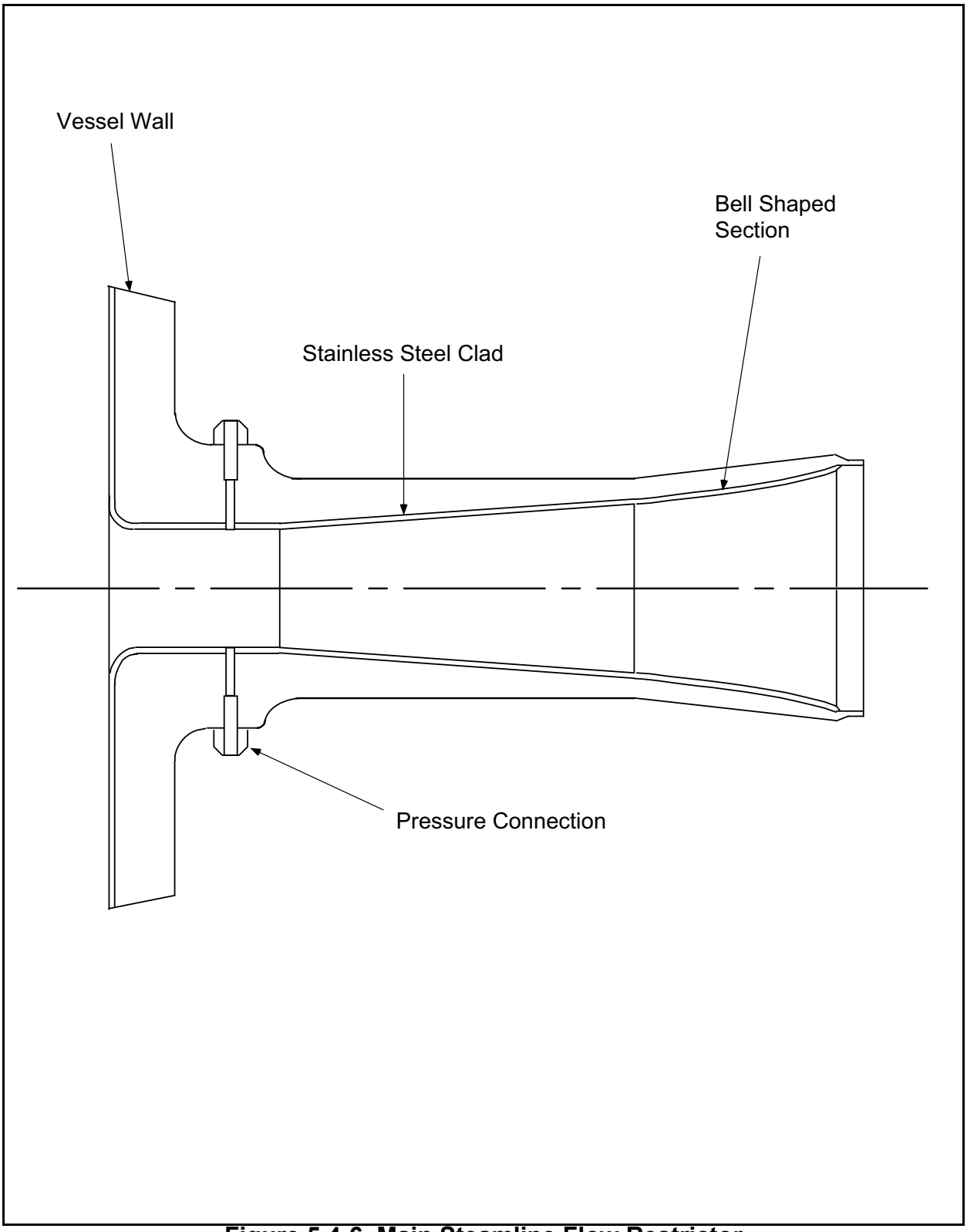

Figure 5.4-6 Main Steamline Flow Restrictor

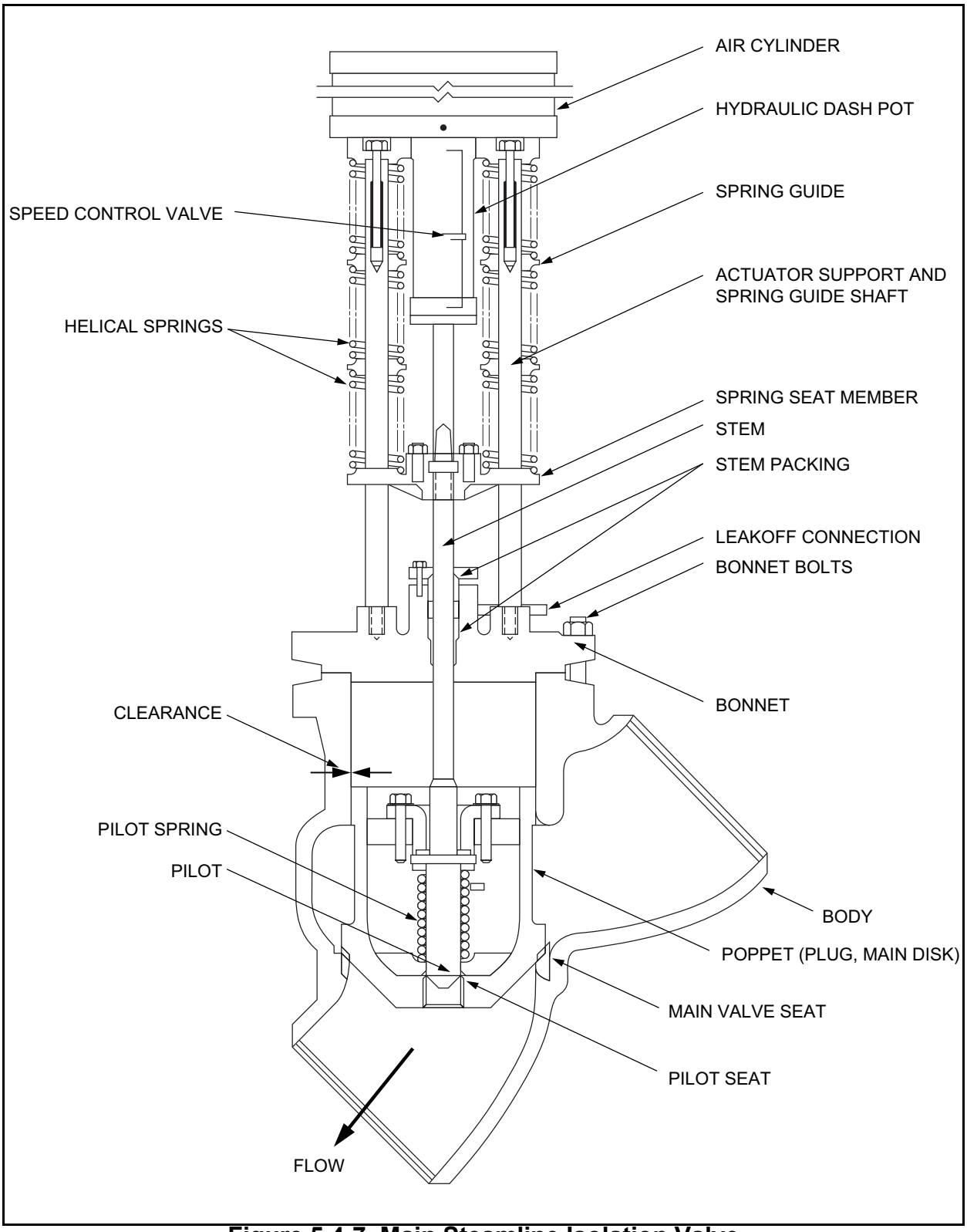

Figure 5.4-7 Main Steamline Isolation Valve

The following figures are located in Chapter 21:

Figure 5.4-8 Reactor Core Isolation Cooling System P&ID (Sheets 1-3)

Figure 5.4-9 Reactor Core Isolation Cooling System PFD (Sheets 1-2)

Figure 5.4-10 Residual Heat Removal System P&ID (Sheets 1-7)

Figure 5.4-11 Residual Heat Removal System PFD (Sheets 1-2)

Figure 5.4-12 Reactor Water Cleanup System P&ID (Sheets 1-4)

Figure 5.4-13 Reactor Water Cleanup System PFD (Sheets 1-2)

Figure 5.4-14 Reactor Water Cleanup System IBD (Sheets 1-11)

5A Method Of Compliance For Regulatory Guide 1.150

5A.1 Introduction

During the mid 1970's, the USNRC became concerned with the adequacy of ASME Section XI examinations performed on Reactor Pressure Vessel (RPV) assembly welds. These concerns were well founded since the examinations being performed were not consistent. Often large indications detected during preservice examinations could not even be detected during inservice examinations.

The USNRC did a study of NDE methods, procedures, ASME Section XI, PSI/ISI Data, and the results of both the PISC and PVRC programs. The results showed that some standardization of methods and recording criteria was required. In July of 1981, RG 1.150 was issued. Revision 1 of this Regulatory Guide, which allowed approved alternate methods of compliance, was issued in 1983. GEH has been complying with Revision 1, using the alternate method, since then.

RG 1.150 provided a much needed first step in the continuing improvement of RPV assembly weld examination techniques. These improved techniques, along with changes in the ASME Code, have rendered portions of the Reg Guide obsolete.

5A.2 Discussion

The following discussion constitutes GE's proposed alternate for compliance with RG 1.150 when GERIS-2000 system is used. The GERIS-2000 system and procedures offer capabilities that exceed the Regulatory Guide requirements.

The requirements of RG 1.150, Revision 1 alternate method, are listed below along with an explanation of how each one is, or will be met. In some instances, technically correct alternate methods are used in place of RG 1.150 requirements. Where alternate methods are used, the justification for the alternate is given. The requirements are numbered in accordance with the numbering used in Revision 1 alternate method.

5A.3 Inspection System Performance Checks

The checks listed in this section will be performed to satisfy the intent of the Regulatory Guide; however, the methodology may differ.

The GERIS-2000 System consists of transducers, pulsers, amplifiers, cables, connectors, and computer work station(s). All items, except for the work stations, will be characterized using ASME Section XI, Appendix VIII, Supplement 1, as a guideline.

5A.3.1 Pre-exam Performance Checks

These checks will not be performed. Checks performed up to six months prior to an examination do not meet GE's quality assurance requirements. The required RF waveform for

pre-exam conditions does not provide any information on transducer operation above that obtained in Subsection 5A.3.2 field performance check.

5A.3.2 Field Performance Checks

The checks will be performed both before and after performance of each inservice examination in accordance with the requirements of the GERIS-2000 examination procedure(s).

Instrument sensitivity shall be in accordance with the requirements of the GERIS-2000 examination procedure(s). These procedures define the following items regarding sensitivity.

(1) Each procedure shall ensure that all required information is entered into the Setup Menus and Calibration Administration Menu.

(2) The system gain is controlled by the computer and should be set to obtain a dynamic range that is adequate for the examination. All gain settings shall require approval by the responsible Level III.

(3) With its logarithmic amplifier, the GERIS-2000 has a design dynamic range of 85 dB or greater. It is designed to record UT signals down to the electronic and material noise levels.

The RF waveform from reference reflectors will be recorded both before and after performance of examinations. The waveforms will be documented by digitizing and recording them through the GERIS-2000 Ultrasonic Imaging System.

Frequency and amplitude data for the reference waveforms will be extracted using PC-TES or similar software. The reference reflectors and methodology is designed to provide consistent results. It should be noted that the GERIS-2000 System also records RF data for all indications detected during an examination. In the future, this will allow frequency and amplitude data to be extracted and compared to the reference reflectors during data analysis.

The RF data is extracted after being processed through the GERIS-2000 System. The digitized data meets the “before it has been rectified or conditioned for display” requirement of the Regulatory Guide because of the way the data is processed by the system. There is no distortion or rectification of signals by the system. More recent practices, such as those described in NUREG CR-2264 “Characterization Methods for Ultrasonic Test Systems”, indicate that this is a technically correct method for collecting the required RF data.

System linearity checks will be performed in accordance with the requirements of the GERIS-2000 examination procedure(s).

Angle beam profile information is recorded per GERIS-2000 examination procedure requirements, which are nominally influenced by the following conditions:

(1) After all search units/channels are calibrated, the responses from the reference reflectors (for each channel group) are checked to assure similarity.

(2) The beam spreads for each shear wave angle beam search unit will be determined by the GERIS-2000 as a part of the calibration. Beam spread shall be determined at the 50% and 20% DAC levels for each side-drilled hole reflector. As a minimum, these checks shall be performed before the start of examination, every ninety days during the examination and after the examinations are completed. The beam spreads should be completed at the same time as the initial and final DAC calibrations. Manual beam spread determination for each search unit and calibration block may be used with the approval of the Responsible Level III. The 70° RL search units do not require beam spreads.

5A.4 Calibration

The calibration portion of the GERIS-2000 examination procedure(s) is performed on ASME basic calibration blocks. The DAC is established during calibration, but it is not used for recording of indications. The system is operated at its maximum dynamic range, ensuring that all relevant data is recorded. During data post processing, indications are evaluated at the required amplitude levels, e.g., 50%, 20%, 1/2 max. amplitude, surface notch and so on. The data evaluation levels are documented separately, allowing comparisons of indications at the desired levels. Because the DAC is not used for data recording, Article 4 of Section V is not followed per se. Calibrations are performed as required by the examination procedure(s).

5A.4.1 Calibration for Manual Scanning

Not applicable to GERIS-2000.

5A.4.2 Calibration for Mechanized Scanning

(1) A mechanized calibration scanner is used. It duplicates the noted critical parameters.

(2) Calibration and scanning speeds are the same, in most cases. If necessary, scanning speed can be slowed to less than calibration speed; however, scanning speed shall never exceed calibration speed.

(3) Normally calibrations are performed in both (forward and backward) scan directions. Data maybe taken in only one direction, if required.

(4) Not applicable to GERIOS-2000.

5A.4.3 Calibration Confirmation

Calibration confirmations generally conform to ASME Section V, Article 4 requirements with equipment specific differences. Other methods, such as a block simulator or statistical analysis of data from an actual patch on the vessel, may also be used for interim sensitivity checks.

(1) No Electronic Block Simulator (EBS) is used with GERIS-2000 calibrations. When an off-site calibration is performed for an examination, it is verified on-site prior to use.

(2) Written calibration records are finished for each GERIS-2000 examination.

(3) Measures are taken to minimize shock and shipping damage.

5A.5 Examination

The scope and extent of ultrasonic examinations are as specified in the COL Applicant's examination plan.

Gates on GERIS-2000 include the complete material thickness. All data within the gate is digitized and recorded. Indications are extracted from the RF data during data processing.

Transducer overlap is as specified in the GERIS-2000 examination procedure(s). The minimum overlap is 25% of the smallest active element in the package.

5A.5.1 Internal Surface

The internal surface (cladding-to-base metal surface) capabilities were demonstrated on a mockup that contained undercald flaws. The mockup has 5 flaws parallel and 4 flaws transverse to the direction of the cladding. The depths of the flaws ranged from 0.381 cm to 1.857 cm, see Figure 5A-1. The flaws are similar to those specified in ASME Section XI, Appendix VII.

Detection of these flaws is considered to meet RG 1.150 requirements.

5A.5.2 Scanning Weld Metal Interface

The beam angles used with GERIS-2000 were shown to be capable of detecting unfavorable oriented planar flaws during system development. Demonstration was performed of a mockup with 3 midwall planar and 6 outside diameter (OD) flaws. In the sample, the 3 midwall flaws are unfavorable oriented planar flaws. The depth of the flaws ranged from 0.627 cm to 2.413 cm.

Detection of the these flaws is considered to meet RG 1.150 requirements.

5A.6 Beam Profile

See Subsection 5A.3.2.

5A.7 Scanning Weld Metal Interface

See Subsection 5A.3.2.

5A.8 Recording and Sizing

The capability of the GERIS-2000 examination equipment and procedure(s) to detect, record, and size the flaws delineated by ASME Section XI, IWB-3500 has been demonstrated. The underclad and weld interface flaws as described in Subsections 5A.5.1 and 5A.5.2 were detected and sized. The plotted data is referenced in Figure 5A-1. The mean deviation sizing error band of the data is:

(1) 0.224 cm for the underclad flaws.

(2) 1.575 cm for the midwall flaws.

(3) 0.168 cm for OD flaws.

5A.8.1 Geometric Indications

The determination that an indication is geometric in origin is made off-line, after the data is gathered. The determination is governed by the applicable GERIS-2000 examination procedure(s). The determination is documented and could include review of RPV assembly drawings, construction radiographs, previous examination data, or any other information that helps define the origin of an indication.

5A.8.2 Indications with Changing Metal Path

(1) GERIS-2000 records all RF data for each scan. The indications are recorded down to the level of electronic and material noise. The system amplifier is logarithmic rather than linear. The greater dynamic range allows extraction of indications much smaller than those considered relevant by RG 1.150.

(2) The recorded data is processed using amplitude level filtering (see Section 5A.4). This permits extraction of the data required by (1) above during post processing of examination data. No determination of reflector amplitudes or locations are made during scanning.

5A.8.3 Indications Without Changing Metal Path

See Subsection 5A.8.2.

5A.8.4 Additional Recording Criteria

(1) Indications are recorded at scan intervals of less than the stated 0.635 cm.

(2) GERIS-2000 meets these requirements.

5A.9 Reporting Of Results

Reporting of indications determined to be "abnormal degradation of the reactor pressure boundary" is the responsibility of the COL applicant.

(1) An analysis of the GERIS-2000 indication database is used to provide the estimate of tolerances in sizing of flaws (error band). The basis for the estimate is a statistical analysis similar to that shown in Appendix VIII.

(2) The description of the technique used to qualify the effectiveness of the GERIS-2000 examination procedure(s) is contained in GEH proprietary document, GEH 508-003-0492, Revision 1. This document is part of the GERIS-2000 Design Record File (DRF), A00-05139. Applicable portions of the DRF may be reviewed on a "need to know" basis. If such review is needed, it should be arranged through GEH Inspection Services.

(3) The estimate of the volume(s) not effectively examined is based on the results of the detection and sizing qualifications described above. The extent of examination coverage is calculated per ASME Section XI, Code case N-460 and Code Interpretation XI-89-32.

(4) The required sketches are supplied as a part of the report of examination results.

(5) It is not anticipated that any alternate NDE techniques will be used along with GERIS-2000. If techniques are used, they will be fully documented as a part of the report of examination results.

5A.10 Conclusion

When the USNRC issued RG 1.150, they served notice on the industry that improvements to RPV examinations and the reporting methods for examination results were required. The Regulatory Guide was the first step toward obtaining these improvements.

GEH has supported this philosophy since its inception. GE, however, also believes that the methodology outlined in ASME Section XI, Appendix VIII provides an opportunity to achieve further improvements in examination performance. Where Appendix VIII does not address an item addressed by the Regulatory Guide, the item becomes a requirement in the GERIS-2000 examination procedure(s). This assures compliance with the intent of RG 1.150.

The melding of portions of ASME Section XI, Appendix VIII with portions of RG 1.150, create the mechanism for performing a superior examination. This is the intent of RG 1.150.

It is the position of the GEH that this alternate method is in full compliance with the intent of USNRC Regulatory Guide 1.150.

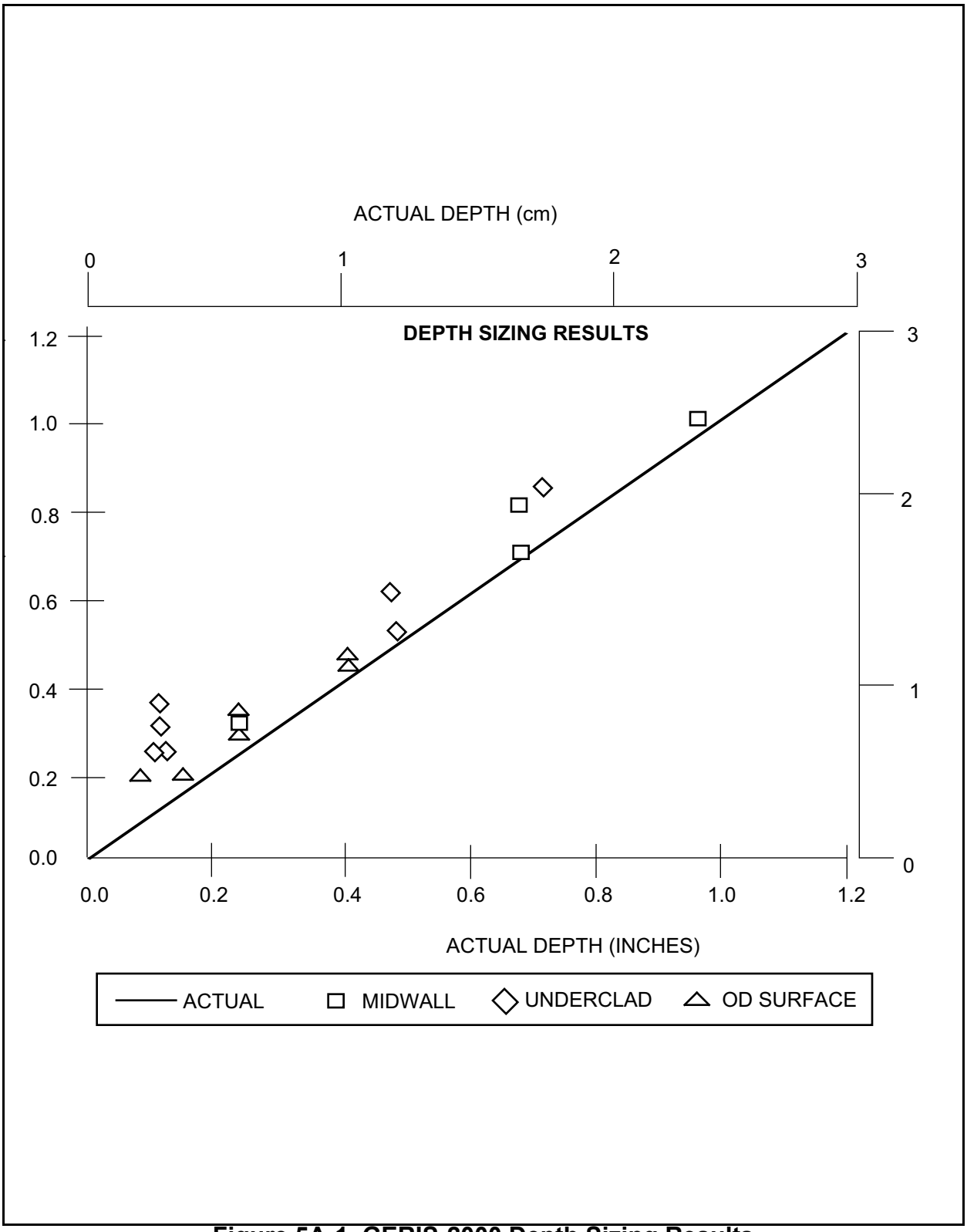

Figure 5A-1 GERIS-2000 Depth Sizing Results

5B RHR Injection Flow And Heat Capacity Analysis Outlines

5B.1 Introduction

This appendix provides procedure outlines of suggested methods to perform the inspections, tests, analyses and confirmations of the Residual Heat Removal System. These outlines use test data, plant geometry, and analyses to confirm requirements when the reactor is pressurized. They also use inspection of vendor information and analyses to confirm heat transfer conditions before there is a source of heat for actual tests.

5B.2 Outline For Injection Flow Confirmation

The RHR injection flow has two features. The first is for beginning injection flow, and the second is for rated injection flow (954 m^3/h).

5B.2.1 Input Data

RHR System functional tests shall be performed on the RHR LPFL mode. Analysis shall be performed to convert the test results to the conditions of the design commitment based upon the following criteria.

5B.2.1.1 Beginning Injection Flow

- loop flow and pump discharge and suction pressure data from the flooder mode with the reactor at atmospheric pressure
- pump discharge and suction pressure data in the minimum flow mode
- plant as-built dimensional data from suppression pool surface level to RPV normal water level
- calculation of vent pressure drop from drywell to wetwell
- supplier provided pump performance data.

5B.2.1.2 Rated Injection Flow

- loop flow and pump discharge and suction pressure data from the flooder mode with the reactor at atmospheric pressure
- pump discharge and suction pressure data in the test loop mode
- plant as-built dimensional data from suppression pool surface level to RPV normal water level
- calculation of vent pressure drop from drywell to wetwell
- supplier provided pump performance data.

5B.2.2 Preliminary

Determine the elevation distance between the suppression pool (S/P) water level and the reactor pressure vessel's (RPV) normal water level. Call this the static head, Hs. See Figure 5B-1 for illustration.

By analysis, determine the expected pressure difference between the drywell and the wetwell airspace resulting from the highest expected flow rate through the vents from the drywell into the S/P when RHR injection flow is needed. Call this the vent head, Hv.

Prepare the plant equipment related to each RHR loop for a flow test from the S/P into the RPV. The RPV head could be on or off for these tests. The following described test-analysis plan is applicable to the three RHR loops.

Perform a flow test from the suppression pool into the RPV; this is the LPFL line. Measure the flow rate, Q1, with the RHR flow element and the pressure head across the pump, H1, as the difference between the RHR pump suction to pump outlet. Q1 will be greater than 954 m^3/h.

5B.2.3 Beginning Injection Flow

Analysis — Determine the hydraulic head loss, Hmin, for the LPFL line for the minimum flow mode flowrate, QMin, from the head to flow-squared relationship as follows:

$$PMin = HMin + Hs + Hv + 11.55\ MPa + margin$$

Test — Using the minimum flow mode, measure the pressure head across the pump, Pmin, (outlet-suction) at the minimum flow rate, Qmin. The pump outlet pressure during the minimum flow mode is the highest pressure from the RHR System that is available for initiating injection into the RPV as the RPV depressurizes. Therefore, the minimum flow condition is equivalent to the pressure where "the LPFL injection flow for each loop begins" as stated by the design commitment.

Confirmation — (Convert all terms to consistent units)

$$PMin = HMin + Hs + Hv + 1.55\ MPa + margin$$

5B.2.4 Rated Injection Flow

Analysis — Determine the hydraulic head loss for the LPFL line at 954 m^3/h, H954, from the head to flow-acquired relationship as follows:

$$H954 + (H1 - Hs)(954/Q1)^2$$

Test — Using the full test loop (same as the S/P cooling mode) and its throttle valve, measure the pressure head across the pump, P954, (outlet - suction) at a flow rate greater than, but approximately equal to 954 m^3/h.

Confirmation — (Convert all terms to consistent units)

P954 + H954 + Hs + Hv + 0.27 MPa+ margin

5B.3 Outline For Heat Exchanger Confirmation

Analysis

(a) Sizing of the RHR heat exchanger was based on the S/P cooling needed during a feedwater line break LOCA to maintain the S/P temperature below 97°C with any two of three RHR loops operating. The result was each loop having the same identical heat exchanger, each characterized within an overall heat removal capacity of 370.5 kJ/s°C for each loop.

(b) The heat removal capacity is specified as 370.5 kJ/sec °C, which is a constant in the following equation.

Q, kJ/s = (370.5)(Ti - Tu)

where Ti = Temperature from the S/P or into the RHR heat exchanger

Tu = Ultimate heat sink temperature

(c) For the system design sizing analysis, the heat exchanger capacity was assumed constant over the range of analysis, which covered the S/P temperature range of 43.3°C to 97°C. Water from the S/P is the input to the RHR heat exchanger, or Ti. The heat exchanger flow rate (S/P side, tube side) was assumed constant at 954 m^3/h.

(d) The 370.5 kJ/s °C constant characterizes the combined performance of the following equipment, flow conditions, and peripheral heat loads.

- RHR heat exchanger thermal design,
- RHR pump at constant flow rate,
- RCW partial flow through the RHR heat exchanger (shell side),
- RCW (Reactor Building Cooling Water System) heat exchangers thermal design (3 per division),
- RCW pumps at constant flow (2 per division),
- RCW heat loads other than RHR applicable during the design basis event,
- RSW (Reactor Service Water System) pumps at constant flow rate (2 per division)

(e) A detailed analytical heat exchanger and pump design that incorporates the features of 4 above in an overall integrated solution will be available by the applicant. This detailed analytical model will produce heat removal capacity values equal to or greater than 370.5 kJ/s°C over the same temperature operating range used for the system analysis (43.3°C to 97°C). This may be a combination of the applicants own analysis plus the analysis of equipment vendors.

(f) The detailed analytical design of the heat exchangers will develop geometric and material features that are used in the manufacture of the heat exchangers. These geometric and material features are available in the procurement documents for the equipment.

(g) A document must be prepared that extracts features from the detailed RHR and RCW heat exchanger analyses, which identifies the heat transfer dependent geometric and material design features of the heat exchangers. This document will identify the heat transfer features developed by the analyst that the fabrication documents must incorporate.

Confirmation

Confirmation will be satisfied by the acceptable inspections of the following documentation.

- The overall integrated detailed analysis of the features in paragraphs (d) and (e) above must incorporate the correct input characteristic parameters from all interfacing systems.
- The heat transfer dependent geometric and material design features of paragraph (g) above are fully extracted from the overall integrated detailed analysis of paragraphs (d) and(e) above.
- The fabrication documents for the plant installed RHR and RCW heat exchangers incorporate the heat transfer dependent geometric and material design features of paragraph (g) above.
- The RCW performance is satisfied.
- The RSW performance is satisfied.

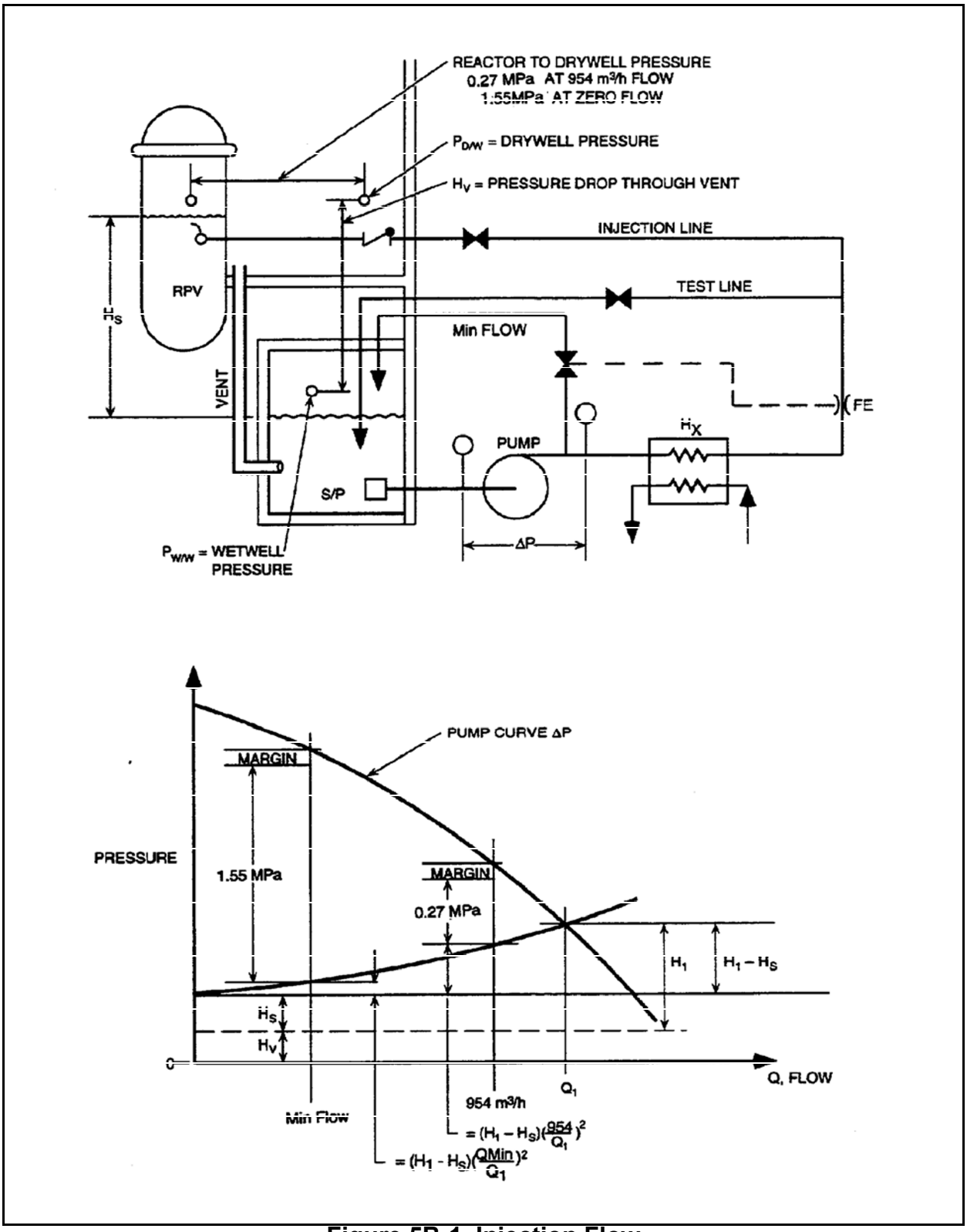

Figure 5B-1 Injection Flow