Facility:	Turkey Point	Task No:	01046046100
Task Title:	Calculate a Manual Makeup to the VCT	JPM No:	R.A.1
K/A Reference:	2.1.25 RO 3.9 SRO 4.2		
Examinee:		NRC Examiner:	
Facility Evaluator:		Date:	

Method of testing:

Simulated Performance _____ Actual Performance _____

Classroom X Simulator _____ Plant _____

Read to the examinee:

I will explain the initial conditions, which steps to simulate or discuss, and provide initiating cues. When you complete the task successfully, the objective for this job performance measure will be satisfied.

Initial Conditions:

- Unit 3 is in MODE1 100%
- VCT level is 20%
- RCS boron concentration is 874 ppm
- Boric Acid Flow Controller, **FC-3-113A is to be set at 11 gpm**
- The Boric Acid Storage Tank concentration is at 5687 ppm

Task Standard:

- Examinee calculates a manual makeup to the VCT at 240.5 ± 4 gallons **and** a Primary Water flow rate of 60.5 ± 1gpm. The totalizers should be set at the following values: BA at 37 ± 2 gallons and PW at 203 ± 2 gallons.

Required Materials:

- 0-OP-046, CVCS - Boron Concentration Control
- 3-OSP-041.1-Reactor Coolant System Leak Rate Calculation
- Unit 3 Plant Curve Book Section 3
- Calculator

General References:

- 0-OP-046, CVCS - Boron Concentration Control
- Unit 3 Plant Curve Book Section 3

Initiating Cue:

- You have been directed to perform a calculation, using Method 2 as presented in the PCB, Section III, for a manual blend to the VCT to raise VCT level from 20% to 37% and maintain RCS boron concentration constant using section 5.4 of 0-OP-046, CVCS - Boron Concentration Control. The calculation should include the BA and PW flow rates and totalizer settings to add the required volumes of water to the VCT.

- All applicable procedure prerequisites satisfied

Time Critical Task: No

Validation Time: 15 minutes

HAND JPM BRIEFING SHEET TO EXAMINEE AT THIS TIME!

SIMULATOR SETUP

Reset to IC #

Load Lesson

Ensure Simulator Operator Checklist is complete

N/A

Denote critical steps with a check mark(√)

Start Time _____

STEP 1 :	Obtain a copy of 0-OP-046, CVCS - Boron Concentration Control and the Unit 3 Plant Curve Book Section 3	____ SAT ____ UNSAT
Standard:	0-OP-046, CVCS - Boron Concentration Control and Unit 3 Plant Curve Book Section 3 are obtained.	
Cue	Provide a copy of 0-OP-046, CVCS - Boron Concentration Control and Unit 3 Plant Curve Book Section 3 or allow the operator to use LOTUS Notes.	
Comment		
NOTE:		

PROCEDURE CAUTION	**CAUTION** *Instrument uncertainties for the Boric Acid and Primary Water flow transmitters can result in the actual amount of Boric Acid or Primary Water added to be either more or less than the amount calculated. Thus, care is needed to ensure that excessive reduction in RCS boron concentration does not occur due to the uncertainties.*	
STEP 2 :	Determine the required boric acid flow rate.	____ SAT ____ UNSAT
Standard:	Examinee determines the required boric acid flow of 11 gpm from the initial conditions sheet.	
Cue		
Comment		
NOTE:	**11 gpm** was given in the initial conditions	

STEP 3 : √	Determine the required primary water flow rate	___ SAT ___ UNSAT
Standard:	Examinee determines the required primary water flow of 60.5 ± 1 gpm	
Cue		
Comment		
NOTE:	Example in the Plant Curve Book solves for the primary water flow as follows: $\frac{ACID_{gpm} \times BAST_{ppm}}{BORON_{ppm}} - ACID_{gpm} = WATER_{gpm}$ $\frac{12\ gpm \times 5675\ ppm}{1200\ ppm} - 12\ gpm = 44.75\ gpm$	
NOTE:	Boric Acid Storage Tank concentration was given at 5687 ppm	
NOTE:	11gpm * 5687 ppm/874 ppm -11gpm=60.5 ± 1 gpm	

PROCEDURE NOTE	**NOTE** *VCT level is 14.15 gallons per percent level indication.*	
STEP 4 : √	Determine amount of blended volume to raise VCT level from 20% to 37%.	____ SAT ____ UNSAT
Standard:	Examinee determines 240.5 ± 4 gallons of blended water needed to be added to raise VCT level from 20% to 37%. BA Totalizer Setting = 240.5 gallons (11/71.5)= 37 ±2 gallon PW Totalizer Setting = 240.5 gallons (60.51/71.5)= 203 ± 2 gallon Or BA Totalizer= 11gpm* 240.5/71.5= 37 ±2 gallon PW Totalizer = 60.5 gpm* 240.5/71.5= 203.0 ±2 gallon	
Cue		
Comment	Candidate may request 3-OSP-041.1,Reactor Coolant Leak Rate Calculation for VCT level data.	
NOTE:	17% VCT level change X 14.15 gal/% in the VCT 240.5 ± 4 gallons	
NOTE:	BA Totalizer Settings = 240.5 gallons (11/71.5)= 37 ±2 gallon PW Totalizer Setting = 240.5 gallons (60.51/71.5)= 203 ± 2 gallon	

Terminating Cue:	**The task is complete when the Examinee returns the cue sheet to the examiner.**	**STOP**

Stop Time _____

Verification of Completion

Job Performance Measure No. R.A.1

Examinee's Name: _____

Examiner's Name: _____

Date Performed: _____

Facility Evaluator: _____

Number of Attempts: _____

Time to Complete: _____

Question Documentation:

Question:

_____

_____

_____

_____

_____

Response:

_____

_____

_____

_____

_____

Result: Satisfactory/Unsatisfactory

Examiner's signature and date: _____ _____

JPM BRIEFING SHEET

The examiner will explain the initial conditions, which steps to simulate or discuss, and provide initiating cues. When you complete the task successfully, the objective for this job performance measure will be satisfied.

INITIAL CONDITIONS:

- Unit 3 is in MODE1 100%
- VCT level is 20%
- RCS boron concentration is 874 ppm
- Boric Acid Flow Controller, **FC-3-113A is to be set at 11 gpm**
- The Boric Acid Storage Tank concentration is at 5687 ppm

INITIATING CUE:

- You have been directed to perform a calculation, using Method 2 as presented in the PCB, Section III, for a manual blend to the VCT to raise VCT level from 20% to 37% and maintain RCS boron concentration constant using section 5.4 of 0-OP-046, CVCS - Boron Concentration Control. The calculation should include the BA and PW flow rates and totalizer settings to add the required volumes of water to the VCT.
- All applicable procedure prerequisites satisfied

Acknowledge to the examiner when you are ready to begin.

HAND THIS PAPER BACK TO YOUR EVALUATOR WHEN YOU HAVE SATISFACTORILY COMPLETED THE ASSIGNED TASK.

Facility: Turkey Point
Task No: _____
Task Title: Determine Shift Manning Requirements
JPM No: R.A.1.a/S.A.1.a
K/A Reference: 2.1.4 (3.3/3.8) Knowledge of shift staffing requirements
REVISED ANSWER KEY 11/3/10
Examinee: _____
NRC Examiner: _____
Facility Evaluator: _____
Date: _____
Method of testing: _____
Simulated Performance _____
Actual Performance X
Classroom X
Simulator _____
Plant _____

Read to the examinee:
I will explain the initial conditions, which steps to simulate or discuss, and provide initiating cues. When you complete the task successfully, the objective for this job performance measure will be satisfied.

Initial Conditions:
- Both Units are at 100% power
- The following operators are available at the beginning of shift.(See Table)
- Assume all operators are clean shaven
- Assume all operators are in service
- 2 RP Technicians are assigned to the Fire Brigade

Qualifications or Licenses Held

Operator	Fire Brigade	Fire Brigade Leader	SNPO	ANPO	TO	Qualifying	SM	US	RO	STA Licensed
Barney							√			
Bosch								√		
Chester								√		
Furthermore								√		√
Owens									√	
Garza									√	
Hoffman									√	
Klink		√						√ (FS)		
James				√						
Marino			√							
Robertson	√				√					
Wade			√							
Woods						√				

Determine if the shift manning, 0-ONOP-105, and fire brigade requirements are met.

Task Standard:

- Determine that shift manning requirements are not met. Need to verify manning requirements in accordance with Technical Specifications, Conduct of Operations, and Control Room Evacuation., Fire Brigade Program (RO)
- SRO determines that operators must be held over for a period not to exceed two hours until a replacement is called in.

Required Materials:
- Technical Specifications
- 0-ADM-202, Shift Relief and Turnover
- 0-ONOP-105,Control Room Evacuation
- 0-ADM-200,Conduct of Operations
- 0-ADM-016.2, Fire Brigade Program
- NAP-402, Conduct of Operations

General References:
- Technical Specifications
- 0-ADM-202, Shift Relief and Turnover
- 0-ONOP-105,Control Room Evacuation
- 0-ADM-200,Conduct of Operations
- 0-ADM-016.2, Fire Brigade Program

Initiating Cue:

Determine if the shift manning, 0-ONOP-105, and fire brigade requirements are met.

Time Critical Task: NO

Validation Time: 20 minutes

HAND JPM BRIEFING SHEET TO EXAMINEE AT THIS TIME!

SIMULATOR SETUP

N/A

Denote critical steps with a check mark(√)

Start Time _____

STEP 1 : √	Obtains a copy of Technical Specifications and review the required license positions that must be satisfied.	____ SAT ____ UNSAT
Standard:	Determines that the Technical Specification requirements are **NOT** met. One Shift Manager (Barney) 1 Unit Supervisors (Bosch or Chester) 1STA (Furthermore) 3 Reactor Operators (Owens, Garza, Hoffman) 1 SNPO/1ANPO/1TO (Marino or Wade, James, Robertson)***(Not Met)**	
Cue		
Comment		
NOTE:		

***Although there are 4 AOs listed, they are not properly qualified to meet the minimum shift compliment per TS table 6.2-1 which requires only 3 AOs but has an asterisk that requires one AO to be assigned to each unit. During normal operations, each crew assigns one NPO (TO) to each unit. ADM-202 has relief checklists for a Unit 3 and a Unit 4 NPO (TO). One of which is designated at the ONOP-105 NPO while the other could be on the fire brigade or not. Only one SNPO is required in addition to the two NPOs to meet the 3 AOs per the table.**

STEP 2 : √	Obtains a copy of 0-ONOP-105 and determines if the ONOP-105 positions can be filled?	____ SAT ____ UNSAT
Standard:	Determines that adequate staffing **MAY** exist for the 0-ONOP-105 positions **depending on certain assumptions.**	
Cue		
Comment	Fire Brigade members shall not include the Shift manager and other members of the minimum shift crew necessary for the safe shutdown of the unit.	
NOTE:	Safe Shutdown Positions (Attachments in ONOP-105) SM- Barney (Att. 1) Unit Sup-Bosch or Chester (Att. 2) 3 ROs Owens, Garza, Hoffman (Att. 3, 4 or 5) *Non Fire Brigade NPO-James (Att. 6) – **Cannot assume James is qualified to be an NPO as he is checked ANPO only** Non Fire Brigade SNPO-Marino (Att. 7 or 8) Non Fire Brigade SNPO-Wade (Att. 7 or 8)	

During normal operations, each crew assigns one NPO (TO) to each unit. One of which is designated as the ONOP-105 NPO while the other could be on the fire brigade but not both fire brigade and ONOP-105. With the shift compliment listed on the turn over page, only one NPO (TO) (Robertson) qualified operator existed and he was part of the fire brigade team. Several options exist here. If you leave Robertson on the fire brigade team, then you are still one short on the fire brigade requirement for the next critical element. If you make Robertson the ONOP-105 NPO (TO) (Attachment 6), then you can satisfy the ONOP-105 requirement but you will be two people short on the fire brigade in the next critical step. Since you have two SNPOs, they could take Attachments 7 & 8 as listed.

Therefore, if you assume that Robertson is the ONOP-105 NPO (TO) and not part of the fire brigade (even though he is qualified) you would meet the ONOP-105 staffing requirements.

Depending on the assumptions and explanations made by the candidate, adequate staffing may or may not exist for this crew compliment related to ONOP-105.

Both answers should be considered with the proper explanation.

STEP 3 : √	Obtains a copy of 0-ADM-200 to determine if all the fire brigade positions can be filled.	____ SAT ____ UNSAT
Standard:	Fire Brigade position requirements are not met because only four positions are filled: • SNPO/FS-Fire Brigade Leader (Klink) • Only one other Operations Member Fire Brigade qualified (Robertson) • Operator not filled • RP Technician 1 • RP Technician 2	
Cue		
Comment	Fire Brigade members shall not include the Shift manager and other members of the minimum shift crew necessary for the safe shutdown of the unit.	
NOTE:		

Terminating Cue:	**If the Applicant is an RO, the task is complete when the Examinee returns the cue sheet to the Examiner.** B. Ceballos 11/3/10	**STOP**

***Although there are 4 AOs only ~~two~~ one of them ~~are~~ is qualified for fire brigade. Depending on how the NPO was previously used in the last step, the applicant may determine that the fire brigade is one or two personnel short. One short if the previous step left the NPO as the fire brigade member and determined that ONOP-105 was not met or two short if the previous step moved the NPO (TO) from fire brigade to the ONOP-105 position since they were already short on the fire brigade.**

Therefore, the examiner should accept that the fire brigade is short one or two people depending on previous assumptions and it would be acceptable to leave one position open for up to two hours while a replacement is called in.

STEP 4 : √	What compensatory actions are required?	____ SAT ____ UNSAT
Standard:	**For Fire Brigade** The Fire brigade is not adequately manned. Hold over one **(OR TWO DEPENDING ON EARLIER ASSUMPTIONS WITH THE NPO (TO) POSITION)** qualified member of the fire brigade for two hours until a replacement can be called in. 0-ADM-016.2, Fire Brigade Program section 4.2. **It is permissible to be short on the fire brigade for up to two hours while a replacement is located**. **For plant Staffing** **HOLD OVER ONE NPO (TO) QUALIFIED OPERATOR TO BE THE SECOND UNIT ASSIGNED NPO (TO). THIS WILL MEET THE 3* IN THE TS TABLE. You will still need to meet the fire brigade requirements above.**	
Cue	Ask the Candidate to determine what compensatory actions are required.	
Comment	Fire Brigade members shall not include the Shift manager and other members of the minimum shift crew necessary for the safe shutdown of the unit.	
NOTE:	**This is only for SRO Applicants**	

Terminating Cue:	**The task is complete when the Examinee returns the cue sheet to the Examiner.**	**STOP**

Stop Time _____

Verification of Completion

Job Performance Measure No. R.A.1.a/S.A.1.a

Examinee's Name: _____

Examiner's Name: _____

Date Performed: _____

Facility Evaluator: _____

Number of Attempts: _____

Time to Complete: _____

Question Documentation:

Question:

_____

_____

_____

_____

_____

Response:

_____

_____

_____

_____

_____

Result: Satisfactory/Unsatisfactory

Examiner's signature and date: _____ _____

JPM BRIEFING SHEET

The examiner will explain the initial conditions, which steps to simulate or discuss, and provide initiating cues. When you complete the task successfully, the objective for this job performance measure will be satisfied.

INITIAL CONDITIONS:

- Both Units are at 100% power
- The following operators are available at the beginning of shift.(See Table)
- Assume all operators are clean shaven
- Assume all operators are in service
- 2 RP Technicians are assigned to the Fire Brigade

Qualifications or Licenses Held

Operator	Fire Brigade	Fire Brigade Leader	SNPO	ANPO	TO	Qualifying	SM	US	RO	STA Licensed
Barney							√			
Bosch								√		
Chester								√		
Furthermore								√		√
Owens									√	
Garza									√	
Hoffman									√	
Klink		√						√ (FS)		
James				√						
Marino			√							
Robertson	√				√					
Wade			√							
Woods						√				

Initiating cue:
Determine if the shift manning, 0-ONOP-105, and fire brigade requirements are met.

Acknowledge to the examiner when you are ready to begin.

HAND THIS PAPER BACK TO YOUR EVALUATOR WHEN YOU HAVE SATISFACTORILY COMPLETED THE ASSIGNED TASK.

Facility:	Turkey Point	Task No:	02023013300
Task Title:	Determine Contingency Actions Required During Reduced Inventory Operations	JPM No:	S.A.1.b
K/A Reference:	2.1.2 SRO 4.4		
Examinee:		NRC Examiner:	
Facility Evaluator:		Date:	

Method of testing:

Simulated Performance X Actual Performance

Classroom X Simulator Plant

Read to the examinee:

I will explain the initial conditions, which steps to simulate or discuss, and provide initiating cues. When you complete the task successfully, the objective for this job performance measure will be satisfied.

Initial Conditions:

- Unit 4 is in Mode 5
- Unit 4 was shutdown 11 days ago.
- RCS Level on LIS-4-6421 and LIS-4-6423 indicate 35%.
- Unit 4 is in normal electrical alignment for the shutdown conditions.
- A failure was discovered on the Unit 4A EDG and the EDG was declared OOS.
- Plant conditions do not allow for realignment of plant electrical buses.

Task Standard:

- Examinee correctly identifies the minimum required contingency actions in 0-ADM-051, Outage Risk Assessment and Control.

Required Materials:

- 0-ADM-051, Outage Risk Assessment and Control
- PCB-Section 5, Figure 9 and Figure 12 A

General References:

- NAP-402 Conduct of Operations
- 0-ADM-200 Conduct of Operations

Initiating Cue:

You have been directed to identify the minimum required contingency action (s) (if any) by circling the appropriate actions contained in 0-ADM-051, Outage Risk Assessment and Control.

Time Critical Task: No

Validation Time: 15 minutes

HAND JPM BRIEFING SHEET TO EXAMINEE AT THIS TIME!

SIMULATOR SETUP

Reset to IC #

Load Lesson

Ensure Simulator Operator Checklist is complete

Denote critical steps with a check mark(√)

Start Time _____

STEP 1 :	Obtain 0-ADM-051, Outage Risk Assessment and Control. (From the initiating cue.)	____ SAT ____ UNSAT
Standard:	0-ADM-051, Outage Risk Assessment and Control is obtained.	
Cue	Provide a copy of 0-ADM-051, Outage Risk Assessment and Control.	
Comment		
NOTE:		

STEP 2 : √	Identify the correct enclosure of ADM-051 to implement based on plant conditions.	____ SAT ____ UNSAT
Standard:	Examinee identifies Enclosure 5 as the correct enclosure to implement based on the following: • Phase II is applicable due to the time following unit shutdown given in the initiating cue. • RCS temperature <200°F given in the initiating cue. • RCS Loops not available given in the initiating cue. • RCS is in reduced inventory base on Level Indications.	
Cue		
Comment		
NOTE:	4.12 Phase II 4.12.1 The later stages of an outage in which the decay heat load is reduced and relaxations of Functional equipment requirements are allowed. It is defined as greater than 240 hours following unit shutdown, or start of fuel reload to the reactor vessel as part of a full core offload, whichever occurs first.	
NOTE:	4.13 Reduced Inventory 4.13.1 A condition with fuel in the reactor vessel and the Reactor Coolant System drained down lower than three feet below the vessel flange.	

STEP 3 : √	Review Enclosure 5 requirements.	____ SAT ____ UNSAT
Standard:	Examinee reviews Enclosure 5 and identifies two EDG's required for Reduced Inventory are not available.	
Cue		
Comment		
NOTE:	ENCLOSURE 5 (Page 5 of 9) MINIMUM REQUIRED EQUIPMENT, PHASE II, REDUCED DECAY HEAT LOAD AND RCS TEMP LESS THAN 200 DEGREES WITHOUT RCS LOOPS AVAILABLE Function | Required Equipment | Contingency Action | Color Code One Emergency Diesel Generator on the Associated Unit* | 1. Take action to restore the unavailable EDG to service. 2. Suspend activities that may risk the Off-site power sources. 3. Verify availability of the station blackout tie. 4. Verify the ability to power A OR B from one C Bus transformer. | 0 - ORANGE * Two EDGs required if RCS level lower than 3 feet below the vessel flange. [Commitment Step – 2.3.1]	
NOTE:	4.13 Reduced Inventory 4.13.1 A condition with fuel in the reactor vessel and the Reactor Coolant System drained down lower than three feet below the vessel flange.	

STEP 4 : ✓	Determine required contingency actions.	____ SAT ____ UNSAT
Standard:	Examinee identifies the following contingency actions: • Take action to restore the unavailable EDG to service. • Suspend activities that may risk the Off-site power sources. • Verify availability of the station blackout tie. • Verify the ability to power A OR B from one C Bus transformer.	
Cue		
Comment		
NOTE:	ENCLOSURE 5 (Page 5 of 9) MINIMUM REQUIRED EQUIPMENT, PHASE II, REDUCED DECAY HEAT LOAD AND RCS TEMP LESS THAN 200 DEGREES WITHOUT RCS LOOPS AVAILABLE	

Function	Required Equipment	Contingency Action	Color Code
	One Emergency Diesel Generator on the Associated Unit*	1. Take action to restore the unavailable EDG to service. 2. Suspend activities that may risk the Off-site power sources. 3. Verify availability of the station blackout tie. 4. Verify the ability to power A OR B from one C Bus transformer.	0 - ORANGE

Terminating Cue:	**The task is complete when the Examiner returns the cue sheet to the examiner.**	**STOP**

Stop Time _____

Verification of Completion

Job Performance Measure No. S.A.1.b

Examinee's Name: _____

Examiner's Name: _____

Date Performed: _____

Facility Evaluator: _____

Number of Attempts: _____

Time to Complete: _____

Question Documentation:

Question:

_____

_____

_____

_____

_____

Response:

_____

_____

_____

_____

_____

Result: Satisfactory/Unsatisfactory

Examiner's signature and date: _____ _____

JPM BRIEFING SHEET

The examiner will explain the initial conditions, which steps to simulate or discuss, and provide initiating cues. When you complete the task successfully, the objective for this job performance measure will be satisfied.

INITIAL CONDITIONS:

- Unit 4 is in Mode 5
- Unit 4 was shutdown 11 days ago.
- RCS level on LIS-4-6421 and LIS-4-6423 indicate 35%.
- Unit 4 is in normal electrical alignment for the shutdown conditions.
- A failure was discovered on the Unit 4A EDG and the EDG was declared OOS.
- Plant conditions do not allow for realignment of plant electrical buses.

Initiating Cue:

You have been directed to identify the minimum required contingency action (s) (if any) by circling the appropriate actions contained in 0-ADM-051, Outage Risk Assessment and Control.

Acknowledge to the examiner when you are ready to begin.

HAND THIS PAPER BACK AND YOUR CIRCLED ACTIONS, IF ANY, FROM 0-ADM-051 TO YOUR EVALUATOR WHEN YOU HAVE SATISFACTORILY COMPLETED THE ASSIGNED TASK.

RCS LEVEL CROSS REFERENCE

CONT (FT)	LI-6422 (FT)	LI- 6422 FT	LI- 6422 IN	LI-6421 (%)	LI-462 (%)	LI-459 (%)
44.0	18.37	18	4.4	H	23.36	28.63
43.9	18.27	18	3.2	H	23.03	27.97
43.8	18.17	18	2.0	H	22.70	27.32
43.7	18.07	18	0.8	H	22.38	26.67
43.6	17.97	17	11.6	H	22.05	26.01
43.5	17.87	17	10.4	H	21.73	25.36
43.4	17.77	17	9.2	H	21.40	24.71
43.3	17.67	17	8.0	H	21.08	24.05
43.2	17.57	17	6.8	H	20.74	23.40
43.1	17.47	17	5.6	H	20.42	22.75
43.0	17.37	17	4.4	H	20.10	22.09
42.9	17.27	17	3.2	H	19.78	21.44
42.8	17.17	17	2.0	H	19.45	20.78
42.7	17.07	17	0.8	H	19.12	20.13
42.6	16.97	16	11.6	H	18.80	19.48
42.5	16.87	16	10.4	H	18.47	18.82
42.4	16.77	16	9.2	H	18.14	18.17
42.3	16.67	16	8.0	H	17.82	17.52
42.2	16.57	16	6.8	H	17.49	16.86
42.1	16.47	16	5.6	H	17.17	16.21
42.0	16.37	16	4.4	H	16.84	15.56
41.9	16.27	16	3.2	H	16.52	14.90
41.8	16.17	16	2.0	H	16.19	14.25
41.7	16.07	16	0.8	H	15.86	13.60
41.6	15.97	15	11.6	H	15.54	12.94
41.5	15.87	15	10.4	H	15.21	12.29
41.4	15.77	15	9.2	H	14.89	11.63
41.3	15.67	15	8.0	H	14.56	10.98
41.2	15.57	15	6.8	H	14.24	10.33
41.1	15.47	15	5.6	H	13.91	9.67
41.0	15.37	15	4.4	H	13.58	9.02
40.9	15.27	15	3.2	H	13.26	8.37
40.8	15.17	15	2.0	H	12.93	7.71
40.7	15.07	15	0.8	H	12.61	7.06
40.6	14.97	14	11.6	H	12.28	6.41
40.5	14.87	14	10.4	H	11.95	5.75
40.4	14.77	14	9.2	H	11.63	5.10
40.3	14.67	14	8.0	H	11.30	4.44
40.2	14.57	14	6.8	H	10.98	3.79
40.1	14.47	14	5.6	H	10.65	3.14
40.0	14.37	14	4.4	H	10.33	2.48
39.9	14.27	14	3.2	H	10.00	1.83
39.8	14.17	14	2.0	H	9.67	1.18
39.7	14.07	14	0.8	H	9.35	0.53
39.6	13.97	13	11.6	H	9.02	-0.13
39.5	13.87	13	10.4	H	8.70	L
39.4	13.77	13	9.2	H	8.35	L

CONT (FT)	LI-6422 (FT)	LI- 6422 FT	LI- 6422 IN	LI-6421 (%)	LI-462 (%)	LI-459 (%)
39.3	13.67	13	8.0	H	8.05	L
39.2	13.57	13	6.8	100.48	7.72	L
39.1	13.47	13	5.6	99.89	7.39	L
39.0	13.37	13	4.4	99.29	7.07	L
38.9	13.27	13	3.2	98.69	6.74	L
38.8	13.17	13	2.0	98.09	6.42	L
38.7	13.07	13	0.8	97.49	6.09	L
38.6	12.97	12	11.6	96.89	5.77	L
38.5	12.87	12	10.4	96.29	5.44	L
38.4	12.77	12	9.2	95.69	5.11	L
38.3	12.67	12	8.0	95.09	4.79	L
38.2	12.57	12	6.8	94.49	4.46	L
38.1	12.47	12	5.6	93.89	4.14	L
38.0	12.37	12	4.4	93.29	3.81	L
37.9	12.27	12	3.2	92.69	3.49	L
37.8	12.17	12	2.0	92.09	3.16	L
37.7	12.07	12	0.8	91.49	2.83	L
37.6	11.97	11	11.6	90.89	2.51	L
37.5	11.87	11	10.4	90.30	2.18	L
37.4	11.77	11	9.2	89.70	1.86	L
37.3	11.67	11	8.0	89.10	1.53	L
37.2	11.57	11	6.8	88.50	1.21	L
37.1	11.47	11	5.6	87.90	0.88	L
37.0	11.37	11	4.4	87.31	0.55	L
36.9	11.27	11	3.2	86.71	0.23	L
36.8	11.17	11	2.0	86.11	-0.10	L
36.7	11.07	11	0.8	85.51	L	L
36.6	10.97	10	11.6	84.91	L	L
36.5	10.87	10	10.4	84.31	L	L
36.4	10.77	10	9.2	83.71	L	L
36.3	10.67	10	8.0	83.11	L	L
36.2	10.57	10	6.8	82.52	L	L
36.1	10.47	10	5.6	81.92	L	L
36.0	10.37	10	4.4	81.32	L	L
35.9	10.27	10	3.2	80.72	L	L
35.8	10.17	10	2.0	80.12	L	L
35.7	10.07	10	0.8	79.52	L	L
35.6	9.97	9	11.6	78.92	L	L
35.5	9.87	9	10.4	78.32	L	L
35.4	9.77	9	9.2	77.73	L	L
35.3	9.67	9	8.0	77.13	L	L
35.2	9.57	9	6.8	76.53	L	L
35.1	9.47	9	5.6	75.93	L	L
35.0	9.37	9	4.4	75.33	L	L
34.9	9.27	9	3.2	74.73	L	L
34.8	9.17	9	2.0	74.13	L	L
34.7	9.07	9	0.8	73.53	L	L

* -Bottom of Hot Leg. LI-6421 and LI-6422 will not indicate RCS level lower than this level
H - Off scale high
L - Off scale low

Unit 4
Section V
Figure 9
13 AUG 90

LEVEL INDICATORS VS. RCS COMPONENT ELEVATIONS FOR USE IN MODE 5 & 6 ONLY (THIS IS FOR INFORMATION ONLY)

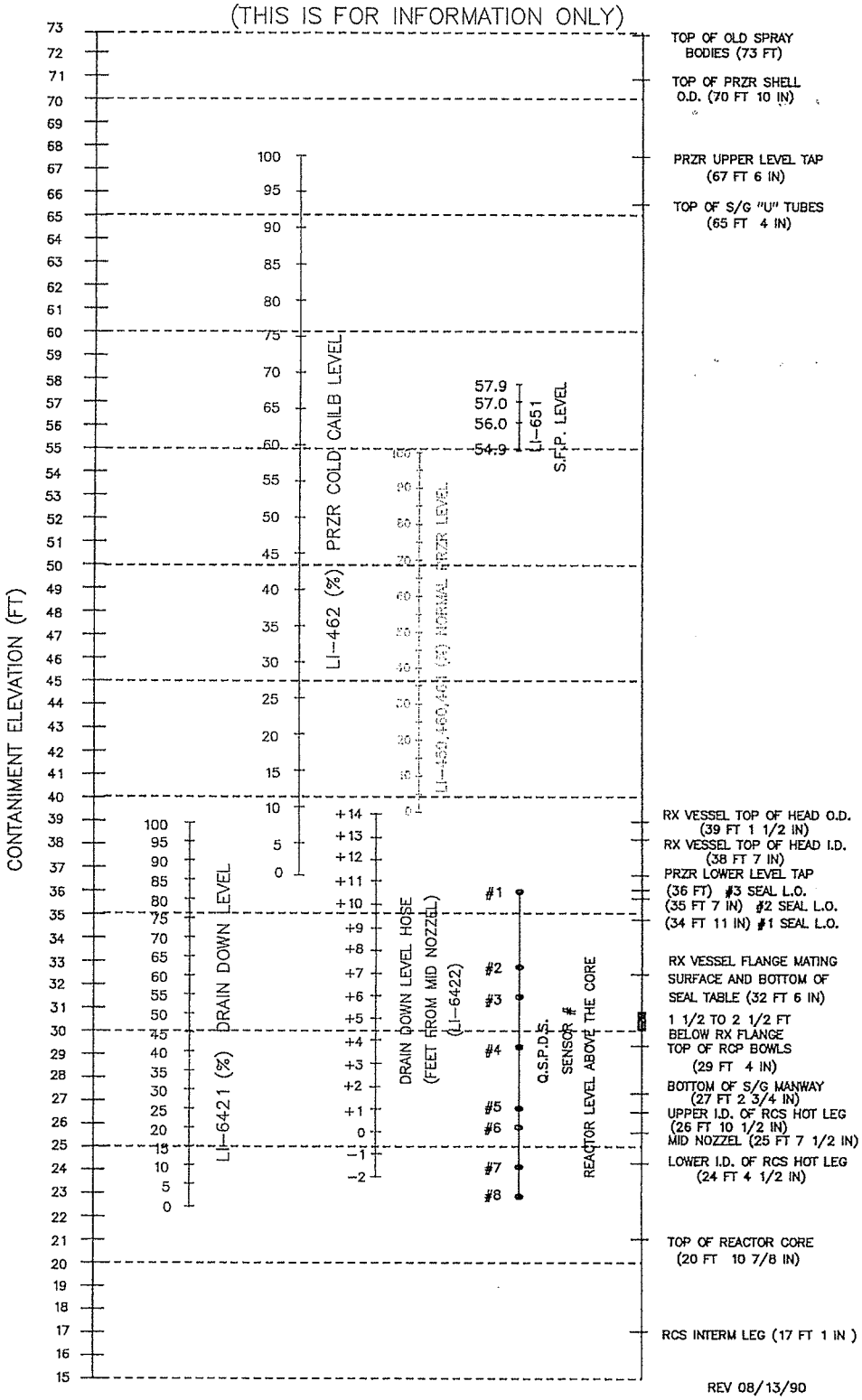

CONTROLLED DOCUMENT

Florida Power & Light Company

Turkey Point Nuclear Plant

This procedure may be affected by an O.T.S.C. (On The Spot Change) verify information prior to use
Date verified_____ Initials_____

0-ADM-051

Title:

Outage Risk Assessment and Control

(Information Use)

Responsible Department:	Operations
Revision Approval Date:	3/11/10

PCRs *09-0220, 09-0231, 08-3909, 09-0660, 09-0664, 09-2314, 09-3139, 09-3321, 09-3334, 09-3412, 10-0718*
RTSs *92-1335, 94-0210, 94-0439, 94-1167, 95-0224, 95-0543P, 95-0868P, 95-1250, 96-0675P, 96-0817, 97-0798P, 98-1017, 99-0095, 00-0043, 00-0525, 00-0720P, 01-0784P, 02-0592P, 02-0732, 03-0099P, 04-0057, 04-0789, 05-0099, 05-0846, 05-0852P, 06-0669P, 06-0798P, 06-0845, 07-0058P, 07-0230, 07-0703P, 07-0709P, 08-0307*
OTSCs *10719*
PC/Ms *94-059, 95-060*

W97:DJT/cls/nw/cls

LIST OF EFFECTIVE PAGES

Page	Revision Date	Page	Revision Date	Page	Revision Date
1	03/11/10	36	02/16/09	71	09/24/09
2	03/11/10	37	09/24/09	72	03/27/08
3	03/11/10	38	09/24/09	73	09/24/09
4	09/24/09	39	08/29/07	74	09/24/09
5	09/24/09	40	03/27/08	75	03/27/08
6	03/11/10	41	03/27/08	76	03/27/08
7	09/24/09	42	03/27/08	77	03/27/08
8	09/24/09	43	03/27/08	78	10/27/09
9	01/26/09	44	03/27/08	79	02/16/09
10	12/10/07	45	03/27/08	80	09/24/09
11	09/24/09	46	03/27/08	81	09/24/09
12	09/24/09	47	03/27/08	82	09/24/09
13	03/11/10	48	03/27/08	83	03/27/08
14	03/11/10	49	03/27/08	84	03/27/08
15	03/11/10	50	09/24/09	85	03/27/08
16	03/11/10	51	03/27/08	86	03/27/08
17	08/29/07	52	10/27/09	87	09/24/09
18	08/29/07	53	09/24/09	88	09/24/09
19	08/29/07	54	03/27/08	89	03/27/08
20	09/24/09	55	02/16/09	90	09/24/09
21	09/24/09	56	09/24/09	91	09/24/09
22	09/24/09	57	09/24/09	92	03/27/08
23	09/24/09	58	03/27/08	93	09/24/09
24	08/29/07	59	03/27/08	94	03/27/08
25	09/24/09	60	03/27/08	95	10/27/09
26	09/24/09	61	03/27/08	96	09/24/09
27	08/29/07	62	09/24/09	97	03/27/08
28	09/24/09	63	02/16/09	98	02/16/09
29	12/10/07	64	03/27/08	99	09/24/09
30	09/24/09	65	09/24/09	100	09/24/09
31	03/27/08	66	09/24/09	101	09/24/09
32	10/27/09	67	03/27/08C	102	09/24/09
33	02/16/09	68	03/27/08	103	03/27/08
34	09/24/09	69	03/27/08	104	03/27/08
35	02/16/09	70	10/27/09	105	03/27/08

LIST OF EFFECTIVE PAGES

Page	Revision Date	Page	Revision Date	Page	Revision Date
106	03/27/08	141	02/16/09	176	09/24/09
107	02/16/09	142	02/16/09	177	09/24/09
108	03/11/10	143	09/24/09	178	09/24/09
109	02/16/09	144	09/24/09	179	11/03/09
110	09/24/09	145	11/03/09	180	11/03/09
111	03/11/10	146	11/03/09	181	09/24/09
112	03/27/08	147	09/24/09	182	11/03/09
113	03/27/08	148	11/03/09	183	11/03/09
114	03/27/08	149	03/11/10	184	03/11/10
115	03/27/08	150	09/24/09	185	09/24/09
116	09/24/09	151	09/24/09	186	09/24/09
117	09/24/09	152	09/24/09	187	09/24/09
118	09/24/09	153	09/24/09	188	09/24/09
119	03/11/10	154	09/24/09	189	09/24/09
120	03/11/10	155	09/24/09	190	09/24/09
121	03/11/10	156	09/24/09	191	09/24/09
122	03/11/10	157	09/24/09	192	09/24/09
123	03/11/10	158	09/24/09	193	09/24/09
124	03/11/10	159	09/24/09	194	09/24/09
125	03/11/10	160	09/24/09	195	09/24/09
126	03/11/10	161	09/24/09	196	11/06/09
127	03/11/10	162	09/24/09	197	11/06/09
128	03/11/10	163	11/06/09	198	11/06/09
129	03/11/10	164	11/06/09	199	11/06/09
130	03/27/08	165	11/06/09	200	09/24/09
131	09/24/09	166	11/06/09	201	09/24/09
132	09/24/09	167	09/24/09	202	09/24/09
133	09/24/09	168	09/24/09	203	03/11/10
134	09/24/09	169	09/24/09	204	09/24/09
135	02/16/09	170	09/24/09	205	09/24/09
136	09/24/09	171	09/24/09	206	09/24/09
137	09/24/09	172	09/24/09	207	03/11/10
138	09/24/09	173	09/24/09		
139	09/24/09	174	09/24/09		
140	02/16/09	175	09/24/09		

TABLE OF CONTENTS

	Section	Page
1.0	PURPOSE	8
2.0	REFERENCES/RECORDS REQUIRED/COMMITMENT DOCUMENTS	8
3.0	RESPONSIBILITIES	12
4.0	DEFINITIONS	19
5.0	PROCEDURE	24
	FIGURES/ENCLOSURES/ATTACHMENTS	
	Figure 1	
	Typical Heat Up Rates w/Vessel Full	39
	Figure 2	
	Time to Saturation w/Loss of RHR with RCS Level 2 Feet Below RX Vessel Flange	40
	Figure 3	
	Typical RCS Heat Up Rates for Reduced Inventory	44
	Figure 4	
	Typical Heat Up Rates in SFP w/Full Offload	45
	Figure 5	
	Time to Core Uncovery from Mid-Loop	48
	Enclosure 1	
	Minimum Required Equipment, Phase I, Large Decay Heat Load and RCS Temp Less Than 200 Degrees with RCS Loops Filled	49
	Enclosure 2	
	Minimum Required Equipment, Phase I, Large Decay Heat Load and RCS Temp Less Than 200 Degrees without RCS Loops Available	58
	Enclosure 3	
	Minimum Required Equipment, Phase I, Large Decay Heat Load and Reactor Cavity Flooded Greater Than 23 Feet Above the Vessel Flange	67

TABLE OF CONTENTS

Section **Page**

Enclosure 4

Minimum Required Equipment, Phase II, Reduced Decay Heat Load and Reactor Cavity Flooded Greater Than 23 Feet Above the Vessel Flange 75

Enclosure 5

Minimum Required Equipment, Phase II, Reduced Decay Heat Load and RCS Temp Less Than 200 Degrees without RCS Loops Available..... 83

Enclosure 6

Minimum Required Equipment, Phase II, Reduced Decay Heat Load and RCS Temp Less Than 200 Degrees with RCS Loops Filled..... 92

Enclosure 7

Minimum Required Equipment Spent Fuel Pool During Refueling Outages.... 101

Enclosure 8

Unit 4 2000 Refueling Outage Overview 103

Enclosure 9

Sample Outage Communications Tool 104

Enclosure 10

Modes 5, 6, and Defueled Active Shutdown Cooling Equipment Protected Train Concept 106

Enclosure 11

Outage Activity Review Checklist..... 110

Enclosure 12

Component Availability Screening Checklist..... 111

Enclosure 13

Containment Closure Time Limits..... 112

TABLE OF CONTENTS

Section **Page**

Attachment 1

Intentionally Left Blank 113

Attachment 2

Temporary Change Notification 114

Attachment 3

Containment Penetration Exceptions 116

Attachment 4

Outage Risk Assessment and Protected Train Posting Verification 119

Attachment 5

Temporary Change Index 130

Attachment 6

Approval of Work on Protected/Operating Train 131

Attachment 7

Risk Significant Schedule Change (RSSC) 133

Attachment 8

Unit 3 Protected Equipment Postings During Enclosure 1 135

Attachment 9

Unit 3 Protected Equipment Postings During Enclosure 2 and 5 (Pressurizer Drained <10%) 140

Attachment 10

Unit 3 Protected Equipment Postings During Enclosure 3 and 4 Cavity Flooded >23' Above the Vessel Flange 144

Attachment 11

Unit 3 Protected Equipment Postings During Enclosure 5 (Pressurizer Filled >10%) 151

TABLE OF CONTENTS

Section **Page**

Attachment 12

Unit 3 Protected Equipment Postings During Enclosure 6 157

Attachment 13

Unit 3 Protected Equipment Postings During Enclosure 7 RCS Defueled..... 162

Attachment 14

Unit 4 Protected Equipment Postings During Enclosure 1 168

Attachment 15

Unit 4 Protected Equipment Posting During Enclosure 2 and 5 (Pressurizer Drained <10%)..... 174

Attachment 16

Unit 4 Protected Equipment Postings During Enclosure 3 and 4 Cavity Flooded >23' Above the Vessel Flange 178

Attachment 17

Unit 4 Protected Equipment Postings During Enclosure 5 (Pressurizer Filled >10%) 185

Attachment 18

Unit 4 Protected Equipment Postings During Enclosure 6 190

Attachment 19

Unit 4 Protected Equipment Postings During Enclosure 7 RCS Defueled..... 195

Attachment 20

Unit 3 Protected Equipment Postings Restoration..... 201

Attachment 21

Unit 4 Protected Equipment Postings Restoration..... 204

1.0 PURPOSE

1.1 This procedure provides the recommended equipment to be maintained when in Modes 5, 6 and defueled. The objective is to maintain the following Key Safe Shutdown Functions: Decay Heat Removal, Inventory Control, Power Availability, Reactivity Control, Containment Integrity Control, and Instrumentation.

1.2 This procedure provides a Defense-In-Depth approach for those planned situations and equipment outages that are identified as high risk to maintaining the Key Safe Shutdown Functions. Emergency response by the Operations staff on shift does not require the use of this procedure.

1.3 This procedure provides the method of and direction for notification to the Operations staff on changes to the plant configuration that would affect the Key Safe Shutdown Functions.

1.4 This procedure provides the shutdown risk assessments which shall be performed when planning and conducting shutdown activities. The goal of these reviews and planning is to minimize undue risk and to maintain Key Safe Shutdown Functions thereby enhancing shutdown safety.

1.5 This procedure provides for qualitative assessments to balance unavailability of equipment against reliability of the key Safe Shutdown Functions to meet Maintenance Rule requirements.

2.0 REFERENCES/RECORDS REQUIRED/COMMITMENT DOCUMENTS

2.1 References:

2.1.1 FSAR

1. Section 9.3, Appendix 14D, High Density Spent Fuel Storage Racks

2.1.2 Plant Procedures

1. 0-ADM-003, Outage Management
2. 0-ADM-068, Work Week Management
3. 0-ADM-217, Conduct of Infrequently Performed Tests or Evolutions
4. 0-ADM-225, On Line Risk Assessment and Management
5. 0-GMM-051.2, Containment Equipment Hatch
6. 3/4-GOP-305, Hot Standby to Cold Shutdown
7. 3/4-GOP-503, Cold Shutdown to Hot Standby
8. 3/4-ONOP-004, Loss of Off-site Power
9. 3/4-ONOP-004.2, Loss of A 4KV Bus
10. 3/4-ONOP-004.3, Loss of B 4KV Bus
11. 3/4-ONOP-004.4, Loss of C 4KV Bus

2.1.2 (Cont'd)

12. 3/4-ONOP-004.5, Loss of D 4KV Bus
13. 3/4-ONOP-004.10, Loss Of Offsite Power While On Backfeed
14. 3/4-ONOP-004.11, System Restoration Following Loss Of Offsite Power While On Backfeed
15. 3/4-ONOP-004.12, Loss Of *A 4KV Bus While On Backfeed
16. 3/4-ONOP-004.13, Loss Of *B 4KV Bus While On Backfeed
17. 3/4-ONOP-019, Intake Cooling Water Malfunction
18. 3/4-ONOP-030, Component Cooling Water Malfunction
19. 3/4-ONOP-033.1, Spent Fuel Pit Cooling System Malfunction
20. 3/4-ONOP-092.3, Startup Transformer Malfunction
21. 3/4-ONOP-092.4, C Bus Transformer Malfunction
22. 0-ONOP-105, Control Room Evacuation
23. 3/4-OP-038.9, Refueling Activities Checkoff List
24. 3/4-OP-041.8, Filling and Venting the Reactor Coolant System
25. 3/4-OP-041.9, Reduced Inventory Operations
26. 3/4-OP-050, Residual Heat Removal System
27. 3/4-OP-092.1, Main/Auxiliary Transformer Backfeed
28. 3/4-OSP-201.1, RO Daily Logs
29. NP-909, Shutdown Risk
30. AD-AA-101-1004, Work Hour Controls
31. NAP-415, Maintenance Rule Program Administration

2.1.3 Miscellaneous Documents (i.e., PC/M, Correspondence)

1. NUMARC 91-06, Guidelines for Industry Actions to Assess Shutdown Management
2. NUREG-1410, Loss of Vital AC Power and RHR During Mid-Loop Operation at Vogtle Unit 1
3. NRC Information Notice 93-72, Observations From Recent Shutdown Risk and Outage Management Pilot Team Inspections
4. JPN-PTN-SEMS-94-049
5. PC/M 94-059, Diesel Engine Driver for Standby Steam Gen Feedwater Pp P82B
6. PC/M 95-060, Blackstart Diesel Generator Elimination
7. JPN-NR 96-009, Dated February 9, 1996
8. PTN-BFSM-97-018, Spent Fuel Pool and Reactor Coolant System Heatup Following Loss of Cooling
9. INPO SER 1-98, Recurring Inadvertent Reductions of RCS Inventory
10. CR 98-127, OEF 98-005 for INPO SER 1-98
11. CR 98-1373, Containment Closure Requirements of 0-ADM-051
12. CR 98-1657, Less than Adequate Compliance with Requirements and Responsibilities Contained in 0-ADM-051.
13. Calculation PTN-BFJF-99-041, Time to Reach Boiling Conditions after a Loss of RHR
14. CR 02-0608, Curves included in this procedure not accurate
15. Evaluation PTN-ENG-SEMS-03-003, Rev. 0
16. L-2003-021, Dated 2/1/03
17. CR 04-1947, Incorrect Volume used in SFP Time to Boil Calculation
18. CR 2006-7472, Loss of Shutdown Cooling During Restoration of 3C 480V Load Center
19. Evaluation PTN-ENG-SEFJ-07-003, Rev 0, Time to Core Uncovery from Mid Loop RCS after EOC with Loss of RHR
20. CR 2006-10277, CA #9, Add a Curve to 0-ADM-051 for Time to Core Uncovery
21. PTN-ENG-SEMS-03-003 Rev. 3, Implementation of Core Offload to 72 hours.
22. PTN-ENG-SENS-07-032, Rev 0, RHR System Operation with the reactor cavity filled and the vessel upper internals in place.

2.2 Records Required

2.2.1 Advanced notification shall be provided to the Shift Manager for Temporary Changes to the system alignments of Key Safe Shutdown Systems/Components when the minimum required equipment of Enclosures 1 through 7 will not be met. This includes scheduled equipment outages of equipment for maintenance or modification.

2.2.2 A log of all active Temporary Change Notices shall be maintained on Forms 368, similar to Attachment 5.

2.2.3 A mark up of plant operating drawings shall be provided to the Shift Manager whenever Temporary Changes are made on Key Safe Shutdown Systems.

2.2.4 Copies of forms similar to Attachments 1 through 21 shall be maintained in an Outage Risk Assessment Notebook. Two copies of this notebook should be provided, one in the Unit 3 and 4 Control Room; and one in the Work Control Center (WCC) or designated Electronic Risk Assessment Notebook folder.

2.2.5 Completed copies of the below listed items constitute Quality Assurance records, they shall be transmitted to QA Records for retention in accordance with the Quality Assurance Records Program requirements:

1. None

2.3 Commitment Documents

2.3.1 NRC Generic Letter 88-017, Loss of Decay Heat Removal, Dated October 17, 1988

2.3.2 L-2001-201, FPL & NRC, Proposed License Amendments; Response to Request for Additional Selective Implementation of Alternate Source Term; Containment Equipment Door Open During Core Alterations, August 30, 2001

3.0 RESPONSIBILITIES

3.1 Work Controls Manager Organization

3.1.1 The Work Controls Manager is responsible for the following:

1. Overall management of the outage organization.

2. Development of Outage Activities such that the interaction with all involved departments and the planning, scheduling, and execution of the outage schedule provides for Defense In Depth throughout the outage.

3. Obtaining Risk Assessment Team review and Plant Manager approval for all schedule changes that may occur before and during the outage when these changes may impact the Key Safe Shutdown Functions as follows:

   a. During the outage, when daily schedule changes affect risk ties (R Logic), obtaining prior approvals as required using a form similar to Attachment 7.

   b. Before the outage, after freeze of the schedule from a risk perspective, when schedule changes affect risk ties (R Logic), obtaining prior approvals as required using a form similar to Attachment 7.

4. Communication of current plant status and Safety System availability to plant personnel during the course of the outage. Higher Risk Evolutions and any Contingency Plans should also be conveyed to all appropriate plant personnel.

   a. This information should be disseminated via a form similar to Enclosure 9 at least once each OCC shift.

5. Ensuring that the schedule is sufficiently detailed to convey the impact on Key Safe Shutdown Equipment availability.

6. Ensuring that activities scheduled during Higher Risk Evolutions are limited and strictly controlled.

7. Establishing an outage overtime policy, in accordance with AD-AA-101-1004, Work Hour Controls, that ensures personnel involved in Higher Risk Evolutions are alert.

8. Scheduling to maximize Key Safe Shutdown System availability.

9. Assigning and tracking corrective action items from the post outage critique.

10. Assigning personnel to be responsible for closure of the equipment and personnel hatches.

3.1.1 (Cont'd)

11. Obtaining a list of outage clearance boundaries which affect equipment related to the operating unit and assessing the risk associated with that effect using PSA Development, or other means as appropriate.

12. Providing a page in the Plan of the Day that identifies upcoming TCNs for both the shutdown unit and the operating unit. This page should also include TSAs and LCOs for both units. (N/A if OCC is utilized)

13. Provide in writing the names if any, of individuals who have been delegated signature authority for the approval of TCNs and Protected Train Work, Attachment 6.

3.1.2 Risk Assessment Team

1. The Risk Assessment Team Leader is responsible for the following:

NOTE

Enclosure 11 should be used as an aid in determining higher risk activities.

a. Reviewing the outage schedule to ensure that Key Safe Shutdown Functions are optimized and that Key Safe Shutdown Equipment availability is being maintained as follows:

(1) Prior to the outage, reviewing the outage schedule for higher risk activities, and ensuring those activities are clearly identified in the schedule (R Logic).

(2) Prior to the outage, ensuring the higher risk activities are properly tied to maximize Defense In Depth.

(3) Prior to the outage, ensuring the outage schedule and higher risk activities are to be developed so as to minimize or eliminate work on protected/operating shutdown cooling equipment.

(4) During the outage, reviewing schedule updates when R Logic risk ties are changed or broken for impact on risk using a form similar to Attachment 7.

b. Reviewing proposed switchyard work to assure that the reliability of the off-site power source is maintained. Go to 0-ADM-216 for Shared Systems and Switchyard Access Controls.

c. Reviewing of all Contingency Plans for Higher Risk Evolutions and for those periods when Defense In Depth as defined in this procedure is not met. Request a discretionary TCN when minimum equipment for defense-in-depth is met; however, heightened awareness and contingencies are needed to permit a higher risk activity.

d. Assigning and tracking Action Items that are required to implement approved Contingency Plans.

3.1.2 (Cont'd)

e. Reviewing the non-outage unit activities and combination of activities that may affect Key Safe Shutdown Functions on the shutdown unit.

f. Conducting a weekly audit of the Outage Risk Assessment Notebook in the Control Room and the Work Control Center.

g. Within 72 hours of the start of a planned outage, review emergent issues of equipment unavailability and ensure TCNs written if required out-of-service equipment will not be returned to service by the planned outage start date.

h. When unavoidable, prior to, and during, the outage, reviewing, approving, and making recommendations to the senior management team for work on protected/operating train using a form similar to Attachment 6.

i. Schedule meetings and assemble risk assessment team members to review the shutdown risk plan prior to the review and approval by senior management. The team members are those delegated by department managers, knowledgeable of the requirements of this procedure and independent from those who developed the risk logic and shutdown risk plan.

2. The Risk Assessment Team is responsible for the following:

a. Reviewing the outage schedule to ensure that Key Safe Shutdown Functions are optimized and that Key Safe Shutdown Equipment availability is being maintained as follows:

1. Prior to the outage, ensuring the higher risk activities are properly tied to maximize Defense In Depth.

2. Prior to the outage, ensuring the outage schedule is developed so as to minimize or eliminate work on protected/operating shutdown cooling equipment.

3. Review proposed switchyard work to assure that the reliability of the off-site power source is maintained.

4. Reviewing of all Contingency Plans for Higher Risk Evolutions and for those periods when Defense In Depth as defined in this procedure is not met.

5. Review the shutdown risk plan to ensure the periods the plant has reduced defenses is kept as short as possible and contingency plans are clearly established.

b. During the outage, attend team meetings to review the outage schedule to ensure the risk profile is maintained in order to maximize availability of key safe shutdown functions. Review revisions to the shutdown safety plan that result from risk significant schedule changes or emergent work when needed.

3.2 Operations Management Organization

3.2.1 The Operations Manager is responsible for the following:

1. Providing the Work Controls organization input and oversight in the development of Outage Activities such that the execution of the outage schedule provides for Defense In Depth throughout the outage.

2. Conducting a post outage critique that assesses the outage from a safety perspective.

3. Ensuring the Risk Assessment Team Chairperson submits an annual report to the Chief Nuclear Officer in accordance with NP-909, Shutdown Risk.

4. Approving the performance of all Higher Risk Evolutions.

5. Assuring that all Operations personnel are cognizant of the configuration of Key Safe Shutdown Systems.

6. Assuring that Operations personnel are knowledgeable of the requirement to operate in a conservative manner when conducting shutdown and infrequent evolutions. Tailboard Meetings should normally be utilized for these evolutions.

7. Supervising activities of the Risk Assessment Team.

8. Requesting Contingency Plans from the System Engineers when the minimum equipment recommendations will not be met.

9. Provide in writing the names if any, of individuals who have been delegated signature authority for the approval of TCNs and Protected Train Work, Attachment 6.

3.2.2 Shift Manager

1. The Shift Manager is responsible for the following:

   a. Maintaining the Minimum Required Equipment configuration as identified in Enclosures 1 through 7.

   b. Assuring that all shift operating personnel are cognizant of the current plant configuration, Key Safe Shutdown Equipment availability, Contingency Plans in affect, and times to core boiling.

   c. Maintaining control of plant switchyard access.

   d. Assuring compliance with plant Technical Specifications.

   e. Ensuring that the Control Room copy of the Outage Risk Assessment Notebook is being properly maintained.

   f. Ensuring that Key Safe Shutdown System availability is maximized and that equipment outages are kept to minimum duration.

3.2.1 (Cont'd)

g. Controlling activities on Containment penetrations to be able to close all open penetrations in the event of a loss of RHR cooling in accordance with Enclosure 13. [Commitment Step 2.3.1]

h. Shut down cooling and plant control. Control Room evacuation may be necessary at any time. Procedure 0-ONOP-105, Control Room Evacuation, is written for the plant initially in Mode 1, 2, 3. When one or both units are in Mode 4, 5, or 6 only those steps to restore shutdown cooling and stabilize the plant systems after evacuation are necessary.

NOTE

Enclosure 12 may be used as an aid in determining component availability.

i. When the availability of a component is in question, assessing component availability.

j. Ensure protected equipment signs are installed and removed, as required, when entering/exiting Enclosures 1 through 7, in accordance with Attachments 8 through 21 as applicable.

3.2.3 Shift Technical Advisor (STA)

1. Each on-shift STA is responsible for the following:

a. Review plant status and provide Attachment 4 to Work Controls for update of Risk Status of the POD.

b. Review plant status to identify the color code of safe shutdown functions and update the Risk Assessment Notebooks.

c. Look ahead on the schedule for planned changes in risk and planned changes in the applicable enclosure. Update and distribute Attachment 4 at the time of the planned change.

3.3 Engineering Manager Organization

3.3.1 Engineering Manager

1. The Engineering Manager is responsible for the following:

a. Assuring that appropriate department personnel are well informed of Higher Risk Evolutions and reduced safe shutdown equipment availability.

b. Reviewing all Contingency Plans for Higher Risk Evolutions.

c. Conducting a weekly audit of the Outage Risk Assessment Notebook in the Control Room and the WCC.

d. Provide in writing the names if any, of individuals who have been delegated signature authority for the approval of TCNs and Protected Train Work, Attachment 6.

3.3.2 System Engineer

1. Each plant System Engineer whose system is associated with the minimum Required Equipment is responsible for the following:

   a. Notifying the Shift Manager in writing of all Temporary Changes in configuration to Key Safe Shutdown Equipment.

   b. Providing evaluations as required by the Risk Assessment Team.

   c. Taking the lead in resolution of problems and conflicts pertaining to maintaining an acceptable configuration of their system.

   d. Performing a periodic (minimum of weekly) walkdowns to verify system configuration and condition prior to Higher Risk Evolutions and prior to update of the Outage Risk Assessment Notebook.

   e. Developing Contingency Plans as requested by the Work Controls Manager or the Shift Manager. These plans shall be documented on a form similar to Attachment 2 and filed in the Outage Risk Assessment Notebooks.

   f. Ensuring that personnel involved with Contingency Plans have been identified and are familiar with the plan.

   g. Ensuring the inclusion of contingency plan actions are incorporated into PWOs as necessary and presenting these plans to the Risk Assessment Team.

   h. Ensuring that work plans for their system minimize equipment unavailability to the maximum extent practical.

   i. Ensuring that the Defense In Depth concept is maintained for their system.

   j. Checking EOOS Book and equipment clearances for the systems they are responsible for.

   k. Removal of Temporary Change Notices from the Outage Risk Assessment Notebook in the Control Room and the WCC when they no longer are applicable. Temporary Change Notices shall be retained for the post outage critique.

   l. Performing a qualitative assessment of total equipment out of service when preparing a Temporary Change Notice. The assessment compares unavailability of equipment versus reliability of maintaining the Key Safe Shutdown Functions.

3.4 Training Manager Organization

3.4.1 Training Manager

1. The Training Manager is responsible for the following:

   a. Providing training briefs, special training, etc., as required to support Operations and Maintenance in Higher Risk Evolutions. This training should emphasize maintenance of the Key Safe Shutdown Functions and Equipment.

   b. Ensuring that operator training provides knowledge of the Key Safe Shutdown Functions.

3.5 Maintenance Manager

3.5.1 The Maintenance Manager is responsible for the following:

1. Ensuring that resources are allocated in such a fashion as to minimize the duration of unavailability of Key Safe Shutdown Equipment.

2. Controlling and pre-approving all overtime for personnel involved in work that could affect Key Safe Shutdown Functions.

3. Ensuring that material, documentation, and tooling for work being performed during Higher Risk Evolutions is pre-staged in order to minimize the duration of the evolution.

4. Ensuring that equipment is promptly returned to Operations on the completion of maintenance activities.

5. Ensuring that applicable maintenance personnel and any temporary contractors are adequately trained and knowledgeable of activities that could affect Key Safe Shutdown Functions and that controls are adequate to ensure that work activities do not affect in-service equipment.

6. Ensuring that emergent outage work added to the schedule per 0-ADM-003, OUTAGE MANAGEMENT, is reviewed for impact on the Key Safe Shutdown Functions.

7. Provide and maintain personnel at the equipment hatch and airlocks of the containment building to be able to close the equipment hatch with a minimum of 4 bolts, and the personnel hatch as follows: (Ref. Plant procedure 0-GMM-051.2, Containment Equipment Hatch.)

   a. In accordance with Enclosure 13.

   b. Provide for the potential unavailability of AC power and the environmental conditions expected.

8. Assigning personnel to monitor the number of lines and hoses that block closure of the containment hatch and airlocks and assuring quick disconnect devices are utilized.

4.0 DEFINITIONS

4.1 Available

NOTE

Enclosure 12 may be used as an aid in determining component availability.

4.1.1 The status of a system, required support systems, structure or component that is in service or can be placed in service in a Functional or Operable state by immediate manual, local-manual, or automatic action.

4.2 Containment Closure

4.2.1 The action to secure containment and its associated structures, systems, and components as a Functional barrier to fission product release.

4.3 Contingency Plan

4.3.1 An approved plan of compensatory actions or measures:

1. To maintain Defense In Depth by alternate means when pre-outage planning reveals that specified systems, structures, or components will not be available, or have significant potential to be lost.

2. To restore Defense In Depth when planned system, structure, or component availability drops below the planned level.

3. To minimize the likelihood of loss of Key Safe Shutdown Functions during Higher Risk Evolutions.

4.4 Decay Heat Removal Capability

4.4.1 The ability to maintain Reactor Coolant System temperature and pressure, and Spent Fuel Pool (SFP) temperature below the specified limits following plant shutdown.

4.5 Defense In Depth

4.5.1 For the purpose of managing risk during unit shutdown, Defense In Depth is the concept of:

1. Providing systems, structures and components to ensure backup of Key Safe Shutdown Functions using redundant, alternate or diverse methods;
2. Planning and scheduling outage activities in a manner that optimizes safety system availability;
3. Providing administrative controls and Contingency Plans that support and/or supplement the above elements.

4.6 Functional

4.6.1 A system, and required support systems, or component is capable of performing the function for which it is intended to be used for to maintain the Key Safe Shutdown Function. The component or system may not have all of its associated support equipment available and temporary supporting systems may be used.

4.7 Higher Risk Evolutions

4.7.1 Outage activities, plant configurations or conditions during shutdown where the plant is more susceptible to an event causing the loss of a Key Safe Shutdown Function. These are defined as activities that can affect the minimum required equipment of Enclosures 1 through 7.

4.8 Key Safe Shutdown Function

4.8.1 Decay heat removal, inventory control, on-site and off-site power availability, reactivity control, Containment Closure, and shutdown monitoring instrumentation.

4.9 Key Safe Shutdown Systems

4.9.1 Those systems, and required support systems, necessary to maintain the plant in a safe condition while in cold or refueling shutdown conditions. This includes systems necessary to maintain spent fuel cooling, Decay Heat Removal Capability, inventory control, off-site and on-site power capability, reactivity control, and containment integrity instrumentation.

4.10 Partial Draindown

4.10.1 The Reactor Coolant System level is lower than 10 percent in the Pressurizer.

4.11 Phase I

4.11.1 The initial portion of an outage in which the decay heat load is high and additional equipment is maintained Functional. This provides for a better Defense In Depth. It is defined as the first 240 hours following unit shutdown or completion of fuel offload to the Spent Fuel Pit, whichever occurs first.

4.12 Phase II

4.12.1 The later stages of an outage in which the decay heat load is reduced and relaxations of Functional equipment requirements are allowed. It is defined as greater than 240 hours following unit shutdown, or start of fuel reload to the reactor vessel as part of a full core offload, whichever occurs first.

4.13 Reduced Inventory

4.13.1 A condition with fuel in the reactor vessel and the Reactor Coolant System drained down lower than three feet below the vessel flange.

4.14 Probabilistic Safety Assessment (PSA):

4.14.1 An organized methodology for determining and establishing the likelihood of what combination of system and component failures will lead to a catastrophic event resulting in undue risk to the public. Probabilistic Safety Assessments are performed in the Risk and Reliability Assessment Group (RRAG).

4.15 Risk Assessment Team

4.15.1 A team whose charter is to review the outage plan, revisions to the outage plan and Higher Risk Activities to ensure that Key Safe Shutdown Functions are being maintained at the highest practical levels. The Team is composed of managers or senior designees from the following departments:

- Work Controls
- Operations Department
- Maintenance Department
- Engineering Department
- Site Licensing
- On-Line Scheduling Supervisor
- RRAG (Juno Beach via Telcon)

4.15.2 The chairperson is appointed by the Operations Manager. The chairman determines the minimum quorum required to hold a meeting. This determination considers the subject matter to be reviewed and may include additional experts brought in to review specific items.

4.15.3 The Chairperson is responsible for submitting an annual report to the Chief Nuclear Officer in accordance with NP-909, Shutdown Risk.

4.16 Risk Significant Support Equipment

4.16.1 The term applied to equipment necessary to support Key Safe Shutdown Equipment Functions.

4.16.2 This equipment may affect the opposite unit if it is operating.

4.17 Tailboard Meeting

4.17.1 The common term applied to a pre-job briefing held with the personnel involved in an evolution.

4.18 Temporary Change

4.18.1 A change to the system, and required support systems, alignments of the Key Safe Shutdown Systems when this change results in the following condition:

1. The minimum equipment requirements of Enclosures 1 through 7 not being met. This includes equipment outages for maintenance, testing, or modifications.

4.19 Safe Shutdown Function Color Code

4.19.1 Each Safe Shutdown Function is assigned a color code based on the decrease of our defense in depth as noted on Enclosures 1 through 7. A reduction in equipment availability is graded on a critical function that is supported by that equipment, a color code is assigned.

4.19.2 Each key safe shutdown function shall be assigned with a color code based on the equipment available to support that function. Although it may be acceptable to issue a TCN to cover a condition where reduced equipment is available, color coding of key safe shutdown functions is completed on an absolute basis.

4.19.3 Color coding is completed on a daily basis for the following key safe shutdown functions, systems, and support equipment:

1. Decay Heat Removal
2. Inventory Control
3. Power Availability
4. Containment Integrity
5. Instrumentation
6. Risk Significant Equipment
7. SFP Cooling

4.19.4 As part of the daily outage meeting discussion of Outage Risk Assessment, identification of plant conditions and defense in depth plans will be related to a color code based on effect on safe shutdown function equipment status.

4.20 Color Code Definitions

GREEN: Acceptable levels of performance of key safe shutdown functions are being maintained. There is no adverse affect on outage risk.

WHITE: Acceptable levels of performance of key safe shutdown functions are being maintained. Shutdown monitoring instrumentation is less than listed in the required equipment column; however, our defense-in-depth strategy is not compromised.

YELLOW: A degradation of a key safe shutdown function has occurred. The level of degradation may affect our defense in depth strategy. Heightened awareness is desired for this condition. Additional degrees of defense remain and operation at this condition is acceptable considering the risk and scheduler considerations.

ORANGE: A significant degradation of a key safe shutdown function has occurred. Our defense in depth strategy has been compromised. Heightened management awareness is required for the duration of the configuration.

RED: All barriers of our defense in depth strategy have been broken. Equipment is in an unacceptable condition. All efforts are to be focused on the restoration.

5.0 PROCEDURE

NOTE

In the event of Control Room evacuation during refueling activities, 0-ONOP-105, Control Room Evacuation, shall be followed in accordance with notations addressing unit mode (see note prior to Section 4.0 in 0-ONOP-105, Control Room Evacuation, for example).

5.1 General Precautions and Instructions

5.1.1 The following items are general precautions and limitations that should be observed when operating either unit in a shutdown condition:

1. The figures and notes provided by this procedure in the Outage Risk Assessment Notebook are not to be used by Operations or any other plant personnel in lieu of controlled plant procedures, design documents and Technical Specifications. The purpose of this information is to provide adequate information to assist Operations in recognizing and responding to abnormal configurations that may impact the Key Safe Shutdown Functions and Equipment. They may be used also as a guideline for outage planning.

CAUTION

The RCS loops can not be considered a valid coolant loop once RCS pressure has been decreased below 100 psig until Substep 5.1.1.2 has been completed.

2. The RCS loops shall not be considered filled per Tech Spec 3.4.1.4.1 unless the following conditions are met:

   a. The RCS has been filled and vented with no intervening evolutions that could introduce air into the steam generators (e.g., RCS level has remained above the reactor vessel nozzles)

   AND

   b. The RCS is pressurized (either water solid or with a pressurizer steam bubble) and above 100 psig.

   AND

   c. At least two steam generators are filled to greater than 10 percent Narrow Range Level.

3. Entering a Reduced Inventory condition shall be prior approved by the Operations Manager and Plant Manager.

5.1.1 (Cont'd)

4. The activities described herein need only be performed for those systems required to maintain the Key Safe Shutdown Functions. Activities described that impact Spent Fuel Pool cooling need only be performed for the first 100 days after unit shutdown for refueling.

5. To support Spent Fuel Pool Cooling heat removal system the following systems shall be monitored and supported by their individual System Engineers:

   a. Spent Fuel Pool Cooling (SFP Cooling)

   b. Spent Fuel Storage System (SFP Storage)

   c. Component Cooling Water System (CCW)

   d. Intake Cooling Water System (ICW)

   e. Emergency Diesel Generators (EDG)

   f. Spent Fuel Building Ventilation (SFP HVAC)

   g. On-site and Off-site Power Availability Functions (ref. Substep 5.1.1.8).

      (1) When the Reactor is defueled, System Engineers shall monitor the requirements of Enclosure 7 for On-site **AND** Off-site Power.

6. To support the Decay Heat Removal Capability function the following systems shall be monitored and supported by their individual System Engineers.

   a. Residual Heat Removal (RHR)

   b. Steam Generator (SG)

   c. Reactor Coolant System (RCS)

   d. Component Cooling Water (CCW)

   e. Intake Cooling Water (ICW)

   f. Chemical and Volume Control System (CVCS)

   g. Safety Injection and RWST (SI)

   h. Spent Fuel Pool Cooling (SFP Cooling) - See Substep 5.1.1.4.

   i. On-site and Off-site Power Availability Functions (ref. Substep 5.1.1.8).

      (1) When the Reactor is defueled, System Engineers shall monitor the requirements of Enclosure 7 for On-site **AND** Off-site Power and Decay Heat Removal.

5.1.1 (Cont'd)

7. To support the Inventory control capability function the following systems shall be monitored and supported by their individual System Engineers:

   a. Chemical and Volume Control System (CVCS)

   b. Primary Water System (PW)

   c. CVCS Boric Acid Storage System (BAST)

   d. Safety Injection and RWST (SI)

   e. Reactor Coolant System (RCS)

   f. Residual Heat Removal (RHR)

8. To support the On-site and Off-site Power Availability Function the following systems shall be monitored and supported by their individual System Engineers:

   a. Switchyard (SWYD)

   b. Startup Transformer (SU)

   c. Main and Aux Transformer (MAIN & AUX XFMR)

   d. C Bus Transformer (C BUS XFMR)

   e. 4160 Volt Busses, including Station Blackout Tie (4KV Dist)

   f. Emergency Diesel Generators (EDG)

   g. 480 Volt Distribution (480V Dist)

   h. 125 Volt DC System (125VDC Dist)

   i. 120 Volt Vital AC System (120VAC Dist)

9. To support the Reactivity Control Function the following systems shall be monitored and supported by their individual System Engineers:

   a. Rod Control System (CRDM)

   b. Chemical and Volume Control System (CVCS)

   c. CVCS Boric Acid Storage System (BAST)

5.1.1.9 (Cont'd)

d. Primary Water System (PW)

e. Safety Injection and RWST (SI)

f. Reactor Coolant System (RCS)

g. Residual Heat Removal (RHR)

h. Steam Generator System (SG)

10. To support the Shutdown Monitoring Instrumentation Function the following systems and components shall be monitored and supported by their individual System/Component Engineers:

a. Nuclear Instrumentation (NIS)

b. Area Radiation Monitoring System (ARMS)

c. Process Radiation Monitoring System (PRMS)

d. Core Exit Thermocouples (CET)

e. Reactor Vessel Level System (QSPDS HJTC)

f. RCS Draindown Level System (RCSDDLIS)

g. Containment Water Level System (Wide Range)

h. Containment Sump level Systems (Narrow Range and Pneumatic)

i. Pressurizer Level System (PZR LVL)

j. RCS Pressure Instrumentation (RCS PRES)

k. RCS Wide Range Temperature Instrument (RCS TEMP)

l. OMS Actuation circuits (OMS)

m. RCS Pressure Control Instruments (RCS PRES CONT)

n. Fire Detection Instrumentation (FIRE DET)

o. Containment Pressure System

5.1.1 (Cont'd)

11. To support Fire Protection Systems the following systems shall be monitored by their individual System Engineers:

    a. Raw Water Storage Tanks (RWT)

    b. Fire Water pumps and Water Distribution Systems (FIRE DIST)

    c. Automatic and Manual Deluge Systems (FIRE SUPPRESSION)

    d. Halon Systems (HALON SYS)

    e. Fire Extinguishers (FIRE EXT)

    f. Fire Detection Systems (FIRE DET)

    g. Fire Barriers and Doors (FIRE BARRIERS)

12. To support Risk Significant Support Equipment, the following systems and components shall be monitored and supported by their individual System Engineers/Component Engineers:

    a. Auxiliary Building HVAC

    b. Instrument Air

    c. DC Equipment Room HVAC

    d. Service Water

    e. Load Center/Switchgear Room HVAC

13. Refueling outages are performed with some consistency of activities. Enclosure 8 contains a typical refueling outage overview. Also shown is the relationship of the outage chronology to the specific enclosures of this procedure.

14. When the unit is depressurized in Enclosure 2 of the outage, work should not be permitted on the Units 3 and 4 side of the switchyard or in the Cable Spreading Room Generator Lockout Panels until the water level in the refueling cavity is 23 feet or greater than the Reactor Vessel Flange. If work is required during this time, Attachment 6 must be completed.

15. In Enclosure 5, work should not be permitted on the Unit 3 and 4 side of the switchyard or in the Cable Spreading Room Generator Lockout Panels until water level is ≥10% in the pressurizer following reactor head installation. If work is required during this time, Attachment 6 must be completed.

5.1.1 (Cont'd)

16. When restoring power to the Startup Transformer from a backfeed alignment, work (restoration) should not be permitted until the refueling cavity is greater than or equal to 23 ft above the reactor vessel flange, and the core is reloaded to avoid challenging SFP cooling with the core offloaded unless an alternate means of SFP cooling is available.

17. During Enclosures 2 and 5, the secondary side of at least two steam generator levels should be maintained above 10% NR to support reflux cooling in the event of a loss of RHR.

18. The alternate RHR flow path through MOV-*-872 should be maintained available during Enclosures 1, 2, 5, and 6 to provide additional defense in depth and support the contingencies used in off normal operating procedures.

19. When entering a Partial Draindown condition the following shall apply:

    a. During Phase 1 of an outage, both Emergency Diesel Generators on the affected unit shall remain available until the water level in the refueling cavity is 23 feet or greater than the Reactor Vessel Flange.

    b. Two RHR, two CCW, and two ICW pumps shall remain available until the water level in the refueling cavity is 23 feet or greater than the Reactor Vessel Flange.

    c. The RCS vent path shall be at least the area equivalent to the removal of a pressurizer safety.

    d. At least 2 CETs shall be available. CETs may be rendered unavailable when reactor vessel head detensioning has commenced.

20. It is permissible for only one train of RHR to be operable and in operation in Mode 6 with the refueling cavity flooded to greater than or equal to 23 feet, without regard to whether the reactor vessel upper internals assembly is in place or removed provided the reactor has been subcritical for at least 72 hours. (Ref: PTN-ENG-SENS-07-032)

5.1.1 (Cont'd)

21. Hoses and equipment which prevents closure of the equipment hatch and personnel airlock doors should be kept to a minimum when fuel is in the reactor vessel.

    a. The Work Controls Manager shall assign personnel to periodically monitor the number of lines.

    b. Lines and hoses should be equipped with quick disconnects at the hatch or airlock.

    c. When large equipment is fouling the hatches a specific plan shall be in place to clear the hatch in the event Containment Closure needs to be established. The equipment hatch (with a minimum of four bolts) and the personnel hatch shall be capable of closure following a loss of RHR cooling as follows:

        (1) In accordance with Enclosure 13.

        (2) Figures 1, 2 and 3 provide RCS heat-up rate information for planning purposes. Personnel required should be in place and dressed out, but may be assigned other duties that would not interfere with their ability to close the hatch.

        (3) The capability for containment closure includes provisions for unavailability of AC power, and the environmental conditions expected.

        (4) Activities which would prevent equipment hatch closure within the required time, will be included in the R-logic to ensure the ability to meet containment closure is maintained.

22. At least one process valve in each penetration that is NOT pressurized should be kept closed or capable of being closed whenever fuel is in the Reactor Vessel. Exceptions may be taken under administrative controls for testing, surveillance, and maintenance.

    a. If an exception is taken, and at least one valve in the penetration is capable of closure either manually from the Control Room or locally, the penetration shall be logged on a form similar to Attachment 3. The log entry shall identify the actions necessary to close the penetration.

    b. If an exception is taken, and the penetration is NOT capable of being closed by at least one valve, a TCN with a contingency plan to achieve closure is required PRIOR to authorizing work on the penetration.

    c. If an exception is taken while RCS level is lower than 3 feet below the vessel flange, and the penetration is NOT capable of being closed by at least one valve, a TCN with a contingency plan to achieve closure and meet 20 psi containment pressure is required PRIOR to authorizing work on the penetration. [Commitment Step – 2.3.1]

5.1.1 (Cont'd)

23. **IF** the Containment Equipment Hatch is maintained open, **THEN** the individual responsible for Fast Closure of the Equipment Hatch shall sign Part B of Attachment 3 . The Equipment Hatch is required to be closed and held in place with a minimum of four bolts upon direction from the Shift Manager as follows: [Commitment Step 2.3.1]

    a. In accordance with Enclosure 13.

    b. The capability for containment closure includes provisions for unavailability of AC power, and the environmental conditions expected.

24. **IF** the Personnel Airlock Door is maintained open, **THEN** the individual responsible to close at least one Containment Personnel Airlock Door shall sign Part C of Attachment 3. This individual is required to close at least one airlock door if directed by the Shift Manager in accordance with Enclosure 13. [Commitment Step 2.3.1]

25. For U3 Cycle 22 Offload during U3RF023, Engineering concurrence is required prior to commencing full core offload (minimum 72 hrs after shutdown) to the spent fuel pool. Once fuel unload to the SFP has commenced, unload SHALL be suspended if Spent Fuel Pool temperature is greater than or equal to 145°F.

    For Unit 4, a minimum of 72 hours after shutdown is required prior to commencing full core offload to the Spent Fuel Pool. Engineering concurrence should be obtained prior to commencing full core offload to the spent fuel pool based on actual core power history, canal temperature etc. Additionally, there is an administrative limit of ≤ 140°F SFP temperature for fuel offload to occur.

26. ANYTIME the Reactor Coolant System is to be drained to less than 70% Pressurizer Level (Cold Cal. LT-*-462) INSTALL a Reactor Vessel Head Vent path **AND** a Pressurizer Vessel Vent path using *-OP-041.7, Draining the Reactor Coolant System, Subsection 5.1.
    (Refer to Substeps 2.1.3.10 and 2.1.3.11.)

27. If the Reactor Coolant System is to be drained lower than 3 feet below the Reactor Vessel Flange with fuel in the reactor vessel, the following requirements are applicable: [Commitment Step – 2.3.1]

    a. All prerequisites are met in accordance with 3 (4)-OP-041.9, Reduced Inventory Operations.

    b. Two CETs are in operation with continuous Control Room read out if the reactor head is on the flange.

    c. Both RCS level indications are available in the Control Room with continuous readout and the level hose is in service with an operator stationed locally in containment or monitoring from the Control Room via a camera and monitor with an Uninterruptible Power Supply (UPS).

5.1.1.27 (Cont'd)

d. Containment Closure will meet the requirements listed in the Precautions and Limitations of 3 (4)-OP-041.9, Reduced Inventory Operations.

e. One train of RHR in service and the other train of RHR operable.

f. 0-ADM-217, Conduct of Infrequently Performed Tests or Evolutions, Brief

g. Sufficient, non-hand held lighting available on L1-3-6422.

h. 2 of 4 Source Range NI with one audible count rate.

28. The requirements of Enclosures 1 through 7 are verified shiftly using 3/4-OSP-201.1, RO Daily Logs. If revisions are made to Enclosures 1 through 7, then 3/4-OSP-201.1 should be reviewed to determine if it also needs to be revised.

29. During A **OR** B 4kv Bus outages, grounds may be installed at *AC13 cubicle. The following requirements must be satisfied:

    a. The specific steps for removal of grounds, and restoration of the *AC13 cubicle shall be provided in the associated A **OR** B 4kv Bus TCN.

    b. The time that grounds are installed should be minimized.

5.2 Advanced Notification of Temporary Changes

5.2.1 The System Engineer should communicate and interact with cognizant and responsible Projects Supervisor, Operations, Maintenance, and Scheduling personnel to determine those upcoming (24 hours to 7 Days) activities which may effect the configuration of systems included in this procedure.

5.2.2 When the minimum equipment requirements of Enclosures 1 through 7 will not be met and results in a yellow, orange, or red risk color, or a discretionary TCN is requested by the Risk Assessment Team, the System Engineer shall complete a Temporary Change Notification along with a markup of applicable plant operating drawings. This notice shall also address any special notes, precautions, training briefs, procedural references, or Contingency Plans as necessary to adequately address the proposed change and maintain the Defense In Depth approach.

5.2.3 The System Engineer shall review the Temporary Change Notice with the Shift Manager to determine if sufficient detail is provided to adequately control the change and to inform the operations staff of the change.

5.2.4 The Shift Manager shall approve the change in plant status.

5.2.5 Temporary change notifications shall be approved/accepted by Plant Management as defined by the scope of the change. If a department is unaffected by the temporary change, it is acceptable to mark N/A on their respective signature line.

5.2.6 A Risk Assessment Team Member shall update the Outage Risk Assessment Notebook in the Control Room and the Work Control Center.

5.2.7 The Shift Manager is responsible through the shift turnover process to notify the oncoming shift of all new Temporary Changes received since the last time they stood shift.

5.2.8 A Risk Assessment Team Member shall notify the Shift Manager and revise the Outage Risk Assessment Notebook to reflect restoration of all Temporary Changes. This should be done within one working day of restoration. The Temporary Change Notice shall be removed from the Outage Risk Assessment Notebook in the Control Room and the WCC and a copy be retained for the post outage critique.

5.2.9 Emergent evolutions shall be performed as directed by the Shift Manager with follow up RSSC forms or TCNs, if required, completed and recorded in the Outage Risk Assessment Notebook in the Control Room and the WCC within 72 hours.

5.2.10 The Temporary Change Notice shall include a qualitative or quantitative (PSA Evaluation) of the total equipment that is out of service during the evolution. Equipment unavailability should be assessed against the reliability of maintaining the Key Safe Shutdown Functions.

5.3 Outage Schedule Risk Assessment

5.3.1 During development of the outage schedule, the Work Controls Manager shall perform the following activities:

1. Using input from Operations, Higher Risk Evolutions shall be identified.
2. Key Safe Shutdown Equipment maintenance windows should be kept to a minimum practical duration.
3. Obtain Risk Assessment Team review of the schedule.
4. Ensure that activities scheduled during Higher Risk Evolutions are kept to a minimum.
5. Establish the outage work schedules.

5.3.1 (Cont'd)

6. Obtain a thorough independent review of the schedule with emphasis on maintaining Key Safe Shutdown Functions.

7. Ensure that the schedule is distributed to all plant personnel who are required to perform or support activities in the schedule.

8. Identify activities that could result in open containment penetrations with fuel in the Reactor Vessel.

9. When it is determined that work on the protected/operating train is unavoidable, ensuring that prior approval is obtained using a form similar to Attachment 6.

5.3.2 During the outage the Work Controls Manager/OCC Outage Manager shall perform the following risk assessment activities:

1. Obtain prior risk review and prior approval as required for schedule changes that affect the Key Safe Shutdown Functions (R Logic) using a form similar to Attachment 7.

2. Risk Assessment Team meetings should be held at least weekly.

3. Contingency Plans for Higher Risk Evolutions shall be communicated to appropriate plant personnel.

4. Unavailability of Key Safe Shutdown Equipment shall be conveyed to appropriate plant personnel. An individual responsible for returning the equipment to Available status should normally be assigned. Means which should be used to communicate status include any of the following:

   a. Plant television monitors

   b. The Plan of the Day

   c. Weekly site newsletter

   d. Outage Communications Tool (see Enclosure 9)

5. The Work Controls OCC Outage Manager shall obtain Operations Manager, Maintenance Manager, Engineering Manager, and Plant Manager review and approval of all Contingency Plans developed. This shall be done when minimum equipment is not available or when Higher Risk Evolutions are planned.

6. Ensure that the Fire Protection Department performed a weekly overall assessment of impaired fire protection features and transient combustibles.

5.3.2 (Cont'd)

7. Ensure that activities are scheduled and performed in a manner in which Containment Closure can be achieved following a loss of cooling as follows:

   a. In accordance with Enclosure 13

   b. The capability for containment closure includes provisions for unavailability of AC power, and the environmental conditions expected.

   c. Figures 1, 2 and 3 provide RCS heat-up rate information for planning purposes.

8. When fuel is in the reactor vessel and RCS inventory will be lower than 3 feet below the vessel flange, equipment requirements will be controlled via plant procedure 3/4-OP-041.9, Reduced Inventory Operations. If minimum equipment requirements cannot be met, evolutions will be stopped or secured by the most expedient actions and RCS level will be restored to higher than 3 feet below the vessel flange.
   [Commitment Step – 2.3.1]

5.4 Minimum Required Equipment

5.4.1 Typical post shutdown unit heat up rates following a loss of cooling are shown in Figures 1, 2 and 3. The time frames for operator action prior to heating above 200°F at the core outlet can be derived from these curves.

NOTES

- *Enclosures 1 through 7 contain suggested preplanned contingency actions which the Shift Manager can evaluate for implementation when minimum equipment requirements are not met. The Shift Manager shall determine which contingencies are to be implemented for any given situation.*
- *Steps 5.4.2 through 5.4.4 only apply when fuel is in the Containment Building. When the reactor is defueled spent fuel pool status and required support systems should be as specified in the RO logs and Enclosure 7 and monitored by the System Engineers.*
- *If a loss of Spent Fuel Pit Cooling occurs when the reactor is defueled, take actions to restore the required systems as specified in 3/4-ONOP-033.1, Spent Fuel Pit Cooling System Malfunction, 3/4-ONOP-030, Component Cooling Water System Malfunction, 3/4-ONOP-019, Intake Cooling Water System Malfunction, and/or applicable TCNs. Typical reactor defueled Spent Fuel Pit heat up rates are provided in Figure 4, and can be utilized to estimate available repair/action time.*

5.4.2 During Phase I of an outage, the equipment listed in Enclosures 1 through 3 should be maintained Available. When the minimum equipment recommendations are not met, the Shift Manager shall determine the appropriate contingencies to be implemented.

5.4.3 During Phase II of an outage, the Equipment listed in Enclosures 4 through 6 should be maintained Available. When the minimum equipment recommendations are not met, the Shift Manager shall determine the appropriate contingencies to be implemented.

5.4.4 Except for approved testing, surveillances, and operating evolutions, which are screened per Enclosure 12, to reduce equipment below levels required in Enclosures 1 through 7, the following shall be accomplished:

1. The time of the equipment outage shall be minimized.
2. A Contingency Plan shall be developed and approved by the Work Controls Manager, Operations Manager, Maintenance Manager, Engineering Manager, and Plant Manager when work on the equipment results in yellow, orange or red color code. An exception to this is RCS level yellow condition in Enclosures 2 and 5; a TCN is not required.
3. The Risk Assessment Team shall review the deviation and any Contingency Plan.
4. A form similar to Attachment 2 shall be completed and filed in the Outage Risk Assessment Notebook in the Control Room and the WCC.
5. The Shift Manager may waive the above requirements for emergency problems arising on shift, however the Operations Manager and Plant Manager shall be notified as soon as practical, and the above requirements shall be performed within 72 working hours..

5.4.5 When the containment penetration status is reduced below that required in Substep 5.1.1.22, the deviation shall be recorded by the Unit Supervisor on a form similar Attachment 3 in the Outage Risk Assessment Notebook in the WCC.

5.5 Protection of Required Equipment

NOTES

- *Enclosure 10 depicts the general concept for protection of required equipment in active support of shutdown cooling.*
- *Specific guidance for placement and removal of signs and/or physical barriers is provided in Attachments 8 through 21.*

5.5.1 The strategy for protection of shutdown cooling includes the concept that the designated operating shutdown cooling train, and its power supplies, shall always be protected.

5.5.2 In addition, when a single train of shutdown cooling is protected, it shall also be in operation. In cases where both shutdown cooling trains are protected, only one train is required to be operating.

5.5.3 Required equipment that actively supports shutdown cooling shall be protected by means of signs and/or physical barriers.

5.5.4 Required equipment not in active support of shutdown cooling should be protected by other administrative means which includes the following:

1. Schedule logic ties
2. Outage communication tools
3. Shift turnovers and turnover meetings
4. Periodic required equipment verifications performed by operations personnel

NOTES

For the purposes of this procedure, the following activities are not considered work:

- *Non-intrusive activities (e.g., walk-downs, Routine Security and Firewatch roves, etc.) that do not involve component manipulations*
- *Emergency response actions*
- *Chemistry sampling of the SFP in the SFP Heat Exchanger room*
- *Routine operator rounds*

Verbal permission to enter, as specified on the posted sign or barrier, is still required for the non-routine walkdowns.

5.5.5 In the attachments that post the protected train barriers, the D 4kv Bus Room is protected when the C ICW or CCW Pump is required to support operability on the protected RHR Train or SFP Cooling Train (i.e., B RHR train in service and protected with the B ICW Pump unavailable and C ICW Pump running with the D 4kv Bus aligned to the B 4kv Bus).

5.5.6 To maximize effectiveness of protected equipment signs and/or barriers work should not be scheduled or allowed on required equipment that is posted as protected unless plant design or emergent conditions make the work unavoidable.

5.5.7 When work on required equipment that is posted as protected is unavoidable due to plant design or emergent conditions, then the activity shall be reviewed by the Risk Assessment Team, and approved by the Senior Management Team. A form similar to Attachment 6 shall be used to document the deviation and approval.

5.5.8 A copy of the approved Attachment 6 shall be in hand at the job site prior to commencing work.

5.6 Outage Emergent Work Review

5.6.1 Emergent work shall be evaluated for addition to the outage per 0-ADM-003, Outage Planning, Scheduling and Implementation.

5.6.2 When emergent work and/or changing conditions impacts the outage schedule the Work Controls Manager, or OCC Outage Manager on shift, shall determine if the Key Safe Shutdown Functions are affected.

1. The Work Controls Manager shall use Operations Department input to make this determination.

2. A Temporary Change Notice is processed as required by Subsection 5.2 and 5.4.

NOTE

A minor change to a R flagged activity is when NO adverse risk significant change occurs due to the requested change having obvious inconsequential degradation to outage or shutdown safety risk. Review of Enclosure 1 through 7 and 11 should be considered to verify no adverse impact to risk. Ensure the basis is adequately documented.

3. If R Logic ties are impacted and the changes are not deemed as minor by the Risk Assessment Team leader, prior approval to break R Logic ties shall be obtained using a form similar to Attachment 7.

4. If R Logic ties are impacted, and the changes are deemed as minor by the Risk Assessment Team Leader, breaking R Logic ties may be done with the verbal approval of the Risk Assessment Team Leader provided such approval is documented using a form similar to Attachment 7.

5. If emergent conditions require work on protected/operating shutdown cooling train, approvals shall be obtained using a form similar to Attachment 6.

5.7 Post Outage Critique

5.7.1 The Operations Manager shall conduct a post outage critique of the outage activities from a risk perspective.

5.7.2 The post outage critique shall be approved by the Plant Manager.

5.7.3 Corrective action items from the critique shall be assigned to the responsible department head and tracked until closure.

END OF TEXT

FIGURE 1
(Page 1 of 1)

TYPICAL HEAT UP RATES W/VESSEL FULL

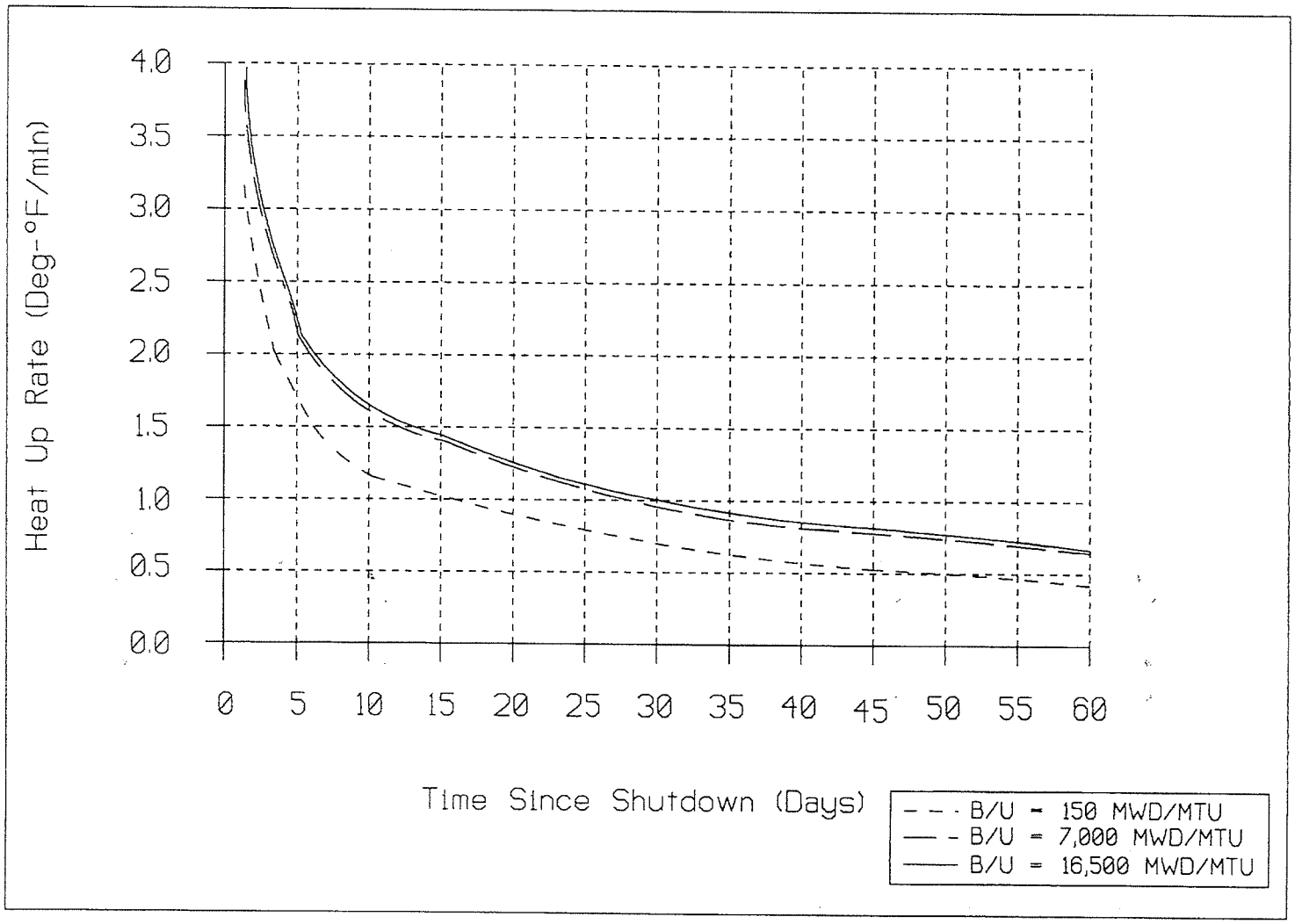

FIGURE 2
(Page 1 of 4)

TIME TO SATURATION W/LOSS OF RHR WITH RCS LEVEL 2 FEET BELOW RX VESSEL FLANGE

RCS Temperature (°F)

Time after Shutdown (Hours)

	60	65	70	75	80	85	90	95	100	105	110	115
24	19.53	18.88	18.24	17.59	16.94	16.29	15.64	14.99	14.34	13.70	13.05	12.41
28	20.25	19.58	18.91	18.24	17.57	16.89	16.22	15.55	14.87	14.20	13.53	12.87
32	20.97	20.28	19.58	18.89	18.19	17.50	16.80	16.10	15.40	14.71	14.02	13.33
36	21.70	20.98	20.26	19.54	18.82	18.10	17.38	16.66	15.94	15.22	14.50	13.79
40	22.42	21.67	20.93	20.19	19.45	18.70	17.95	17.21	16.47	15.73	14.98	14.25
44	23.14	22.37	21.61	20.84	20.07	19.30	18.53	17.77	17.00	16.23	15.47	14.71
48	23.86	23.07	22.28	21.49	20.70	19.91	19.11	18.32	17.53	16.74	15.95	15.17
52	24.51	23.70	22.89	22.08	21.26	20.45	19.63	18.82	18.01	17.20	16.39	15.58
56	25.17	24.33	23.50	22.66	21.83	20.99	20.16	19.32	18.49	17.66	16.82	15.99
60	25.82	24.96	24.11	23.25	22.39	21.54	20.68	19.83	18.97	18.12	17.26	16.41
64	26.45	25.58	24.70	23.82	22.94	22.06	21.19	20.31	19.43	18.56	17.68	16.81
68	27.09	26.19	25.29	24.39	23.49	22.59	21.69	20.80	19.90	19.00	18.11	17.21
72	27.72	26.80	25.88	24.96	24.04	23.12	22.20	21.28	20.36	19.45	18.53	17.62
76	28.32	27.38	26.44	25.50	24.56	23.62	22.68	21.74	20.80	19.87	18.93	18.00
80	28.92	27.96	27.00	26.04	25.08	24.12	23.16	22.20	21.24	20.29	19.33	18.38
84	29.53	28.55	27.57	26.59	25.61	24.63	23.65	22.67	21.69	20.71	19.74	18.76
88	30.13	29.13	28.13	27.13	26.13	25.13	24.13	23.13	22.13	21.13	20.14	19.14
92	30.71	29.69	28.68	27.66	26.64	25.62	24.60	23.58	22.56	21.54	20.53	19.52
96	31.28	30.24	29.21	28.17	27.13	26.09	25.05	24.01	22.98	21.94	20.91	19.88
100	31.85	30.79	29.74	28.68	27.62	26.56	25.50	24.45	23.39	22.34	21.29	20.24
104	32.40	31.32	30.25	29.17	28.10	27.02	25.94	24.87	23.79	22.73	21.66	20.58
108	32.93	31.84	30.74	29.65	28.56	27.46	26.37	25.28	24.18	23.10	22.01	20.92
112	33.46	32.35	31.24	30.13	29.02	27.91	26.79	25.68	24.57	23.47	22.37	21.26
116	33.99	32.86	31.73	30.61	29.48	28.35	27.22	26.09	24.96	23.84	22.72	21.60
120	34.52	33.38	32.23	31.09	29.94	28.79	27.64	26.50	25.35	24.22	23.08	21.94
124	35.01	33.85	32.69	31.53	30.37	29.20	28.04	26.88	25.71	24.56	23.41	22.25
128	35.51	34.33	33.15	31.97	30.79	29.61	28.43	27.26	26.08	24.91	23.74	22.56
132	36.00	34.81	33.61	32.42	31.22	30.03	28.83	27.64	26.44	25.26	24.07	22.88
136	36.46	35.25	34.04	32.83	31.62	30.41	29.20	27.99	26.78	25.58	24.38	23.17
140	36.93	35.70	34.48	33.25	32.03	30.80	29.58	28.35	27.13	25.91	24.69	23.47
144	37.39	36.15	34.91	33.67	32.43	31.19	29.95	28.71	27.47	26.24	25.00	23.77
148	37.75	36.50	35.25	34.00	32.75	31.49	30.24	28.99	27.74	26.49	25.24	24.00
152	38.12	36.85	35.59	34.33	33.06	31.80	30.53	29.27	28.00	26.75	25.49	24.23
156	38.48	37.21	35.93	34.65	33.38	32.10	30.82	29.55	28.27	27.00	25.73	24.46
160	38.85	37.56	36.27	34.98	33.69	32.40	31.12	29.83	28.54	27.26	25.97	24.69
164	39.21	37.91	36.61	35.31	34.01	32.71	31.41	30.11	28.81	27.51	26.21	24.92

FIGURE 2
(Page 2 of 4)

TIME TO SATURATION W/LOSS OF RHR WITH RCS LEVEL 2 FEET BELOW RX VESSEL FLANGE

RCS Temperature (°F)

Time after Shutdown (Hours)

	60	65	70	75	80	85	90	95	100	105	110	115
168	39.57	38.26	36.95	35.64	34.32	33.01	31.70	30.39	29.07	27.77	26.46	25.15
172	39.94	38.61	37.29	35.96	34.64	33.31	31.99	30.66	29.34	28.02	26.70	25.38
176	40.30	38.96	37.63	36.29	34.95	33.62	32.28	30.94	29.61	28.28	26.94	25.61
180	40.66	39.32	37.97	36.62	35.27	33.92	32.57	31.22	29.87	28.53	27.19	25.84
184	41.03	39.67	38.31	36.95	35.58	34.22	32.86	31.50	30.14	28.79	27.43	26.07
188	41.39	40.02	38.65	37.27	35.90	34.53	33.15	31.78	30.41	29.04	27.67	26.30
192	41.76	40.37	38.99	37.60	36.22	34.83	33.45	32.06	30.68	29.30	27.92	26.54
196	42.12	40.72	39.32	37.93	36.53	35.13	33.74	32.34	30.94	29.55	28.16	26.77
200	42.48	41.07	39.66	38.26	36.85	35.44	34.03	32.62	31.21	29.81	28.40	27.00
204	42.85	41.43	40.00	38.58	37.16	35.74	34.32	32.90	31.48	30.06	28.64	27.23
208	43.21	41.78	40.34	38.91	37.48	36.04	34.61	33.18	31.74	30.32	28.89	27.46
212	43.57	42.13	40.68	39.24	37.79	36.35	34.90	33.46	32.01	30.57	29.13	27.69
216	43.94	42.48	41.02	39.57	38.11	36.65	35.19	33.74	32.28	30.83	29.37	27.92
220	44.30	42.83	41.36	39.89	38.42	36.95	35.48	34.01	32.54	31.08	29.62	28.15
224	44.67	43.18	41.70	40.22	38.74	37.26	35.78	34.29	32.81	31.34	29.86	28.38
228	45.03	43.54	42.04	40.55	39.05	37.56	36.07	34.57	33.08	31.59	30.10	28.61
232	45.39	43.89	42.38	40.88	39.37	37.86	36.36	34.85	33.35	31.85	30.34	28.84
236	45.76	44.24	42.72	41.20	39.68	38.17	36.65	35.13	33.61	32.10	30.59	29.07
240	46.12	44.59	43.06	41.53	40.00	38.47	36.94	35.41	33.88	32.36	30.83	29.31

FIGURE 2
(Page 3 of 4)

TIME TO SATURATION W/LOSS OF RHR WITH RCS LEVEL 2 FEET BELOW RX VESSEL FLANGE

RCS Temperature (°F)

Time after Shutdown (Hours)	120	125	130	135	140	145	150	155	160
24	11.76	11.12	10.48	9.83	9.19	8.55	7.92	7.28	6.64
28	12.20	11.53	10.86	10.20	9.53	8.87	8.21	7.55	6.89
32	12.63	11.94	11.25	10.56	9.87	9.19	8.50	7.82	7.13
36	13.07	12.36	11.64	10.93	10.21	9.50	8.79	8.08	7.38
40	13.51	12.77	12.03	11.29	10.55	9.82	9.09	8.35	7.62
44	13.94	13.18	12.42	11.65	10.89	10.13	9.38	8.62	7.87
48	14.38	13.59	12.81	12.02	11.23	10.45	9.67	8.89	8.11
52	14.77	13.96	13.15	12.35	11.54	10.74	9.94	9.13	8.33
56	15.16	14.33	13.50	12.67	11.84	11.02	10.20	9.38	8.56
60	15.55	14.70	13.85	13.00	12.15	11.31	10.47	9.62	8.78
64	15.93	15.06	14.19	13.32	12.45	11.58	10.72	9.86	8.99
68	16.32	15.42	14.53	13.64	12.74	11.86	10.98	10.09	9.21
72	16.70	15.79	14.87	13.96	13.04	12.14	11.23	10.33	9.42
76	17.06	16.13	15.19	14.26	13.32	12.40	11.48	10.55	9.63
80	17.42	16.47	15.52	14.56	13.61	12.67	11.72	10.78	9.83
84	17.79	16.81	15.84	14.87	13.89	12.93	11.97	11.00	10.04
88	18.15	17.16	16.16	15.17	14.18	13.20	12.21	11.23	10.25
92	18.50	17.49	16.48	15.47	14.45	13.45	12.45	11.45	10.45
96	18.84	17.81	16.78	15.75	14.72	13.70	12.68	11.66	10.64
100	19.18	18.13	17.08	16.04	14.99	13.95	12.91	11.87	10.83
104	19.51	18.44	17.38	16.31	15.25	14.19	13.13	12.07	11.01
108	19.83	18.75	17.66	16.58	15.50	14.42	13.35	12.27	11.19
112	20.15	19.05	17.95	16.85	15.75	14.65	13.56	12.47	11.38
116	20.47	19.35	18.23	17.12	16.00	14.89	13.78	12.67	11.56
120	20.79	19.66	18.52	17.39	16.25	15.12	14.00	12.87	11.74
124	21.09	19.94	18.78	17.63	16.48	15.34	14.19	13.05	11.91
128	21.38	20.22	19.05	17.88	16.71	15.55	14.39	13.23	12.07
132	21.68	20.50	19.31	18.13	16.94	15.77	14.59	13.42	12.24
136	21.96	20.76	19.56	18.36	17.16	15.97	14.78	13.59	12.40
140	22.25	21.03	19.81	18.60	17.38	16.17	14.97	13.76	12.55
144	22.53	21.30	20.07	18.83	17.60	16.38	15.16	13.93	12.71
148	22.75	21.50	20.26	19.02	17.77	16.54	15.30	14.07	12.83
152	22.97	21.71	20.46	19.20	17.94	16.70	15.45	14.20	12.96
156	23.19	21.92	20.65	19.38	18.11	16.86	15.60	14.34	13.08
160	23.41	22.13	20.85	19.57	18.29	17.02	15.75	14.48	13.21
164	23.62	22.33	21.04	19.75	18.46	17.17	15.89	14.61	13.33

FIGURE 2
(Page 4 of 4)

TIME TO SATURATION W/LOSS OF RHR WITH
RCS LEVEL 2 FEET BELOW RX VESSEL FLANGE

RCS Temperature (°F)

Time after Shutdown (Hours)

	120	125	130	135	140	145	150	155	160
168	23.84	22.54	21.24	19.93	18.63	17.33	16.04	14.75	13.45
172	24.06	22.75	21.43	20.11	18.80	17.49	16.19	14.88	13.58
176	24.28	22.95	21.63	20.30	18.97	17.65	16.34	15.02	13.70
180	24.50	23.16	21.82	20.48	19.14	17.81	16.48	15.15	13.82
184	24.72	23.37	22.02	20.66	19.31	17.97	16.63	15.29	13.95
188	24.94	23.57	22.21	20.85	19.48	18.13	16.78	15.42	14.07
192	25.16	23.78	22.41	21.03	19.66	18.29	16.93	15.56	14.20
196	25.37	23.99	22.60	21.21	19.83	18.45	17.07	15.70	14.32
200	25.59	24.19	22.80	21.40	20.00	18.61	17.22	15.83	14.44
204	25.81	24.40	22.99	21.58	20.17	18.77	17.37	15.97	14.57
208	26.03	24.61	23.19	21.76	20.34	18.93	17.52	16.10	14.69
212	26.25	24.81	23.38	21.95	20.51	19.09	17.66	16.24	14.81
216	26.47	25.02	23.58	22.13	20.68	19.25	17.81	16.37	14.94
220	26.69	25.23	23.77	22.31	20.85	19.41	17.96	16.51	15.06
224	26.91	25.44	23.97	22.50	21.03	19.57	18.11	16.65	15.19
228	27.12	25.64	24.16	22.68	21.20	19.72	18.25	16.78	15.31
232	27.34	25.85	24.36	22.86	21.37	19.88	18.40	16.92	15.43
236	27.56	26.06	24.55	23.04	21.54	20.04	18.55	17.05	15.56
240	27.78	26.26	24.75	23.23	21.71	20.20	18.70	17.19	15.68

FIGURE 3
(Page 1 of 1)

TYPICAL RCS HEAT UP RATES FOR REDUCED INVENTORY

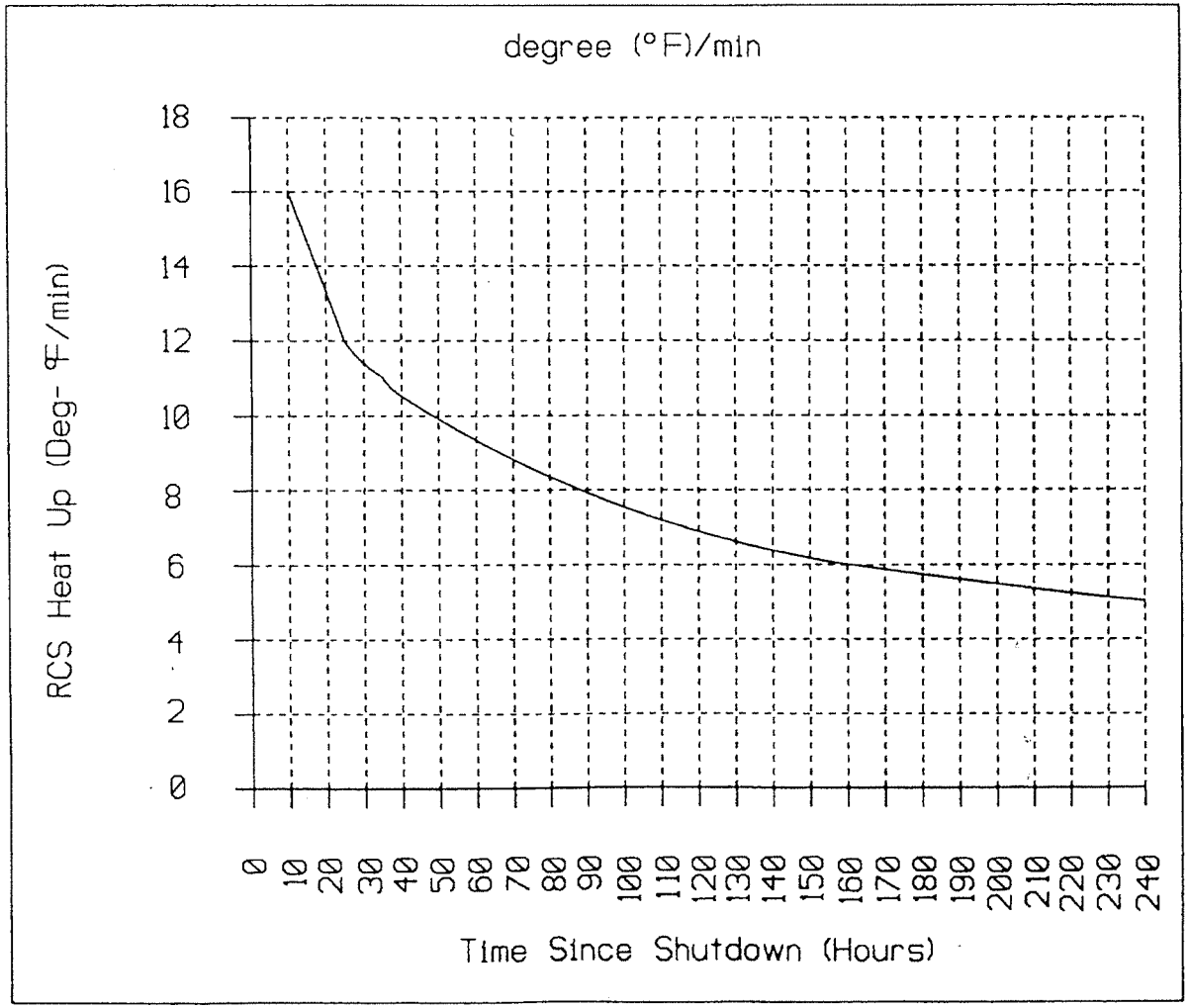

FIGURE 4
(Page 1 of 3)

TYPICAL HEAT UP RATES IN SFP
W/FULL OFFLOAD

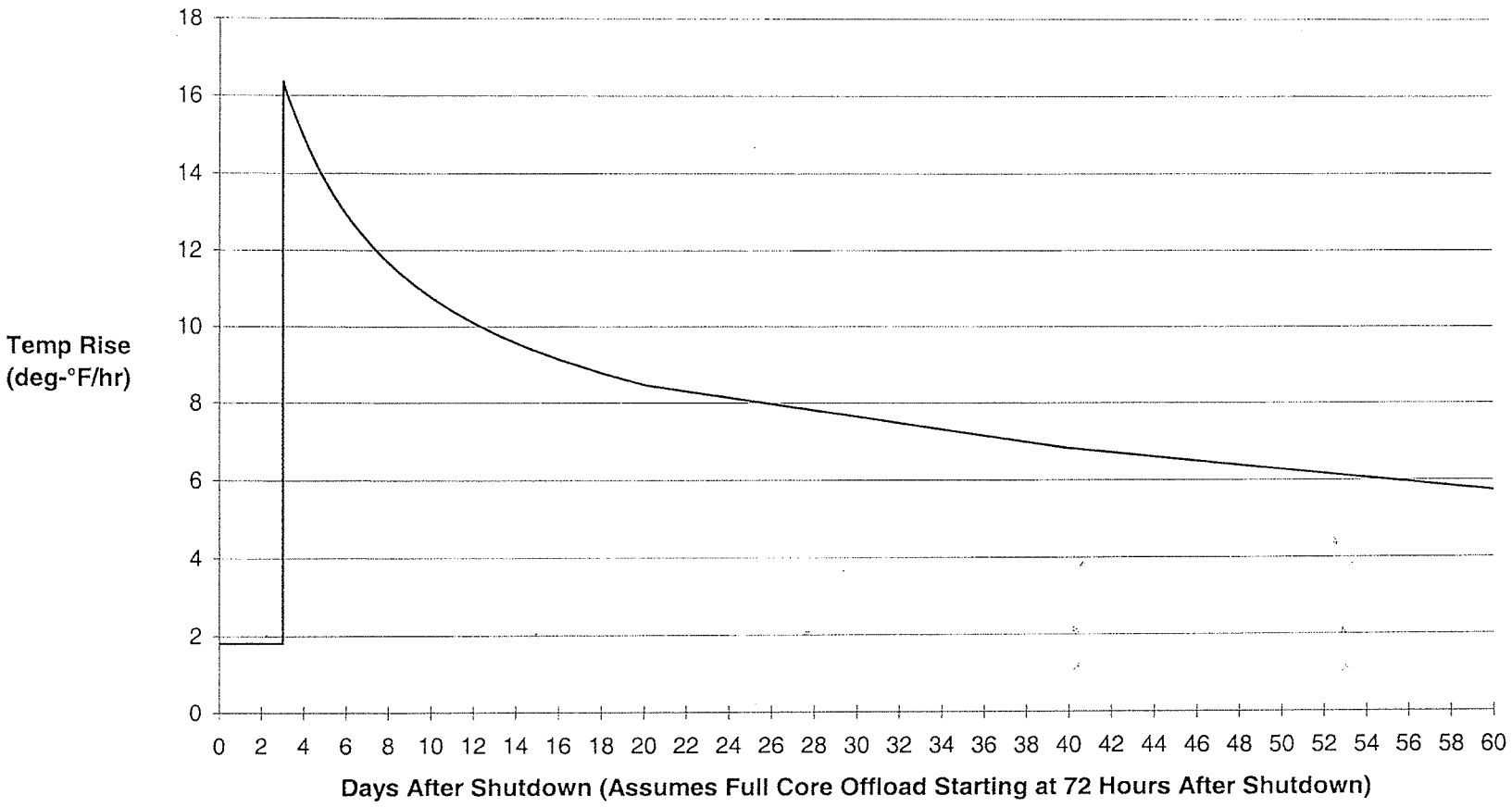

FIGURE 4
(Page 2 of 3)

TYPICAL HEAT UP RATES IN SFP
W/FULL OFFLOAD

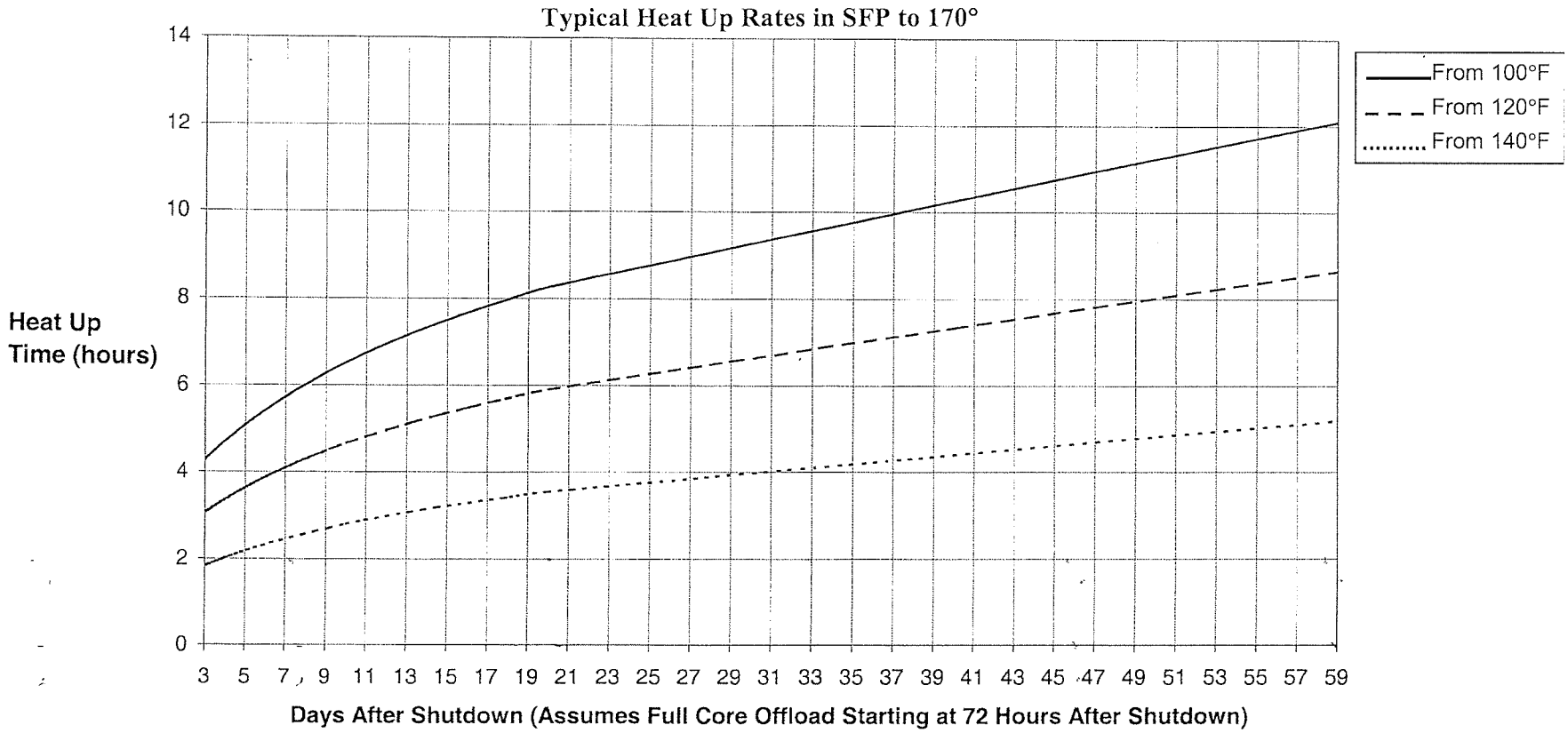

FIGURE 4
(Page 3 of 3)

TYPICAL HEAT UP RATES IN SFP
W/FULL OFFLOAD
(Time to Boil SFP)

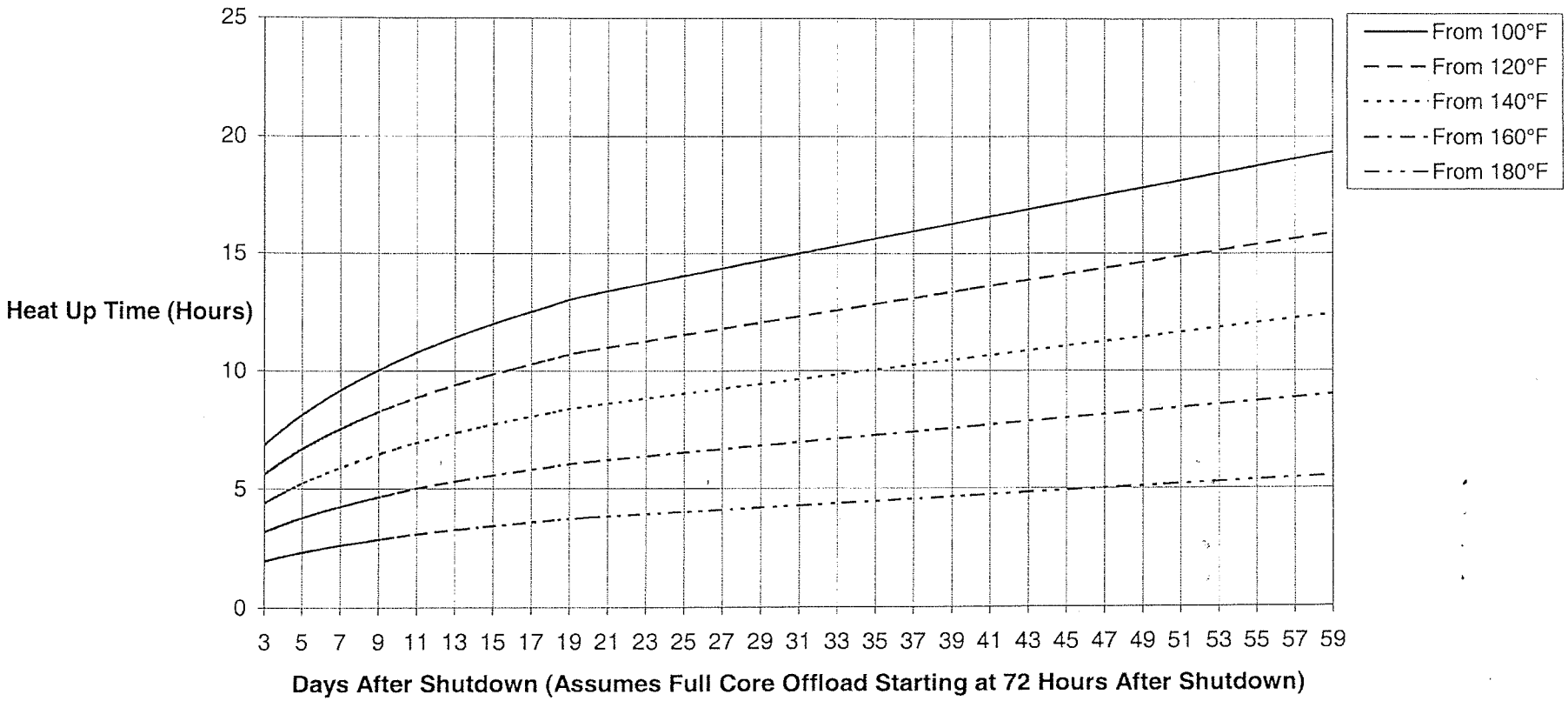

FIGURE 5
(Page 1 of 1)

TIME TO CORE UNCOVERY FROM MID-LOOP
(Assuming Adequate Vent to Atmospheric Pressure)

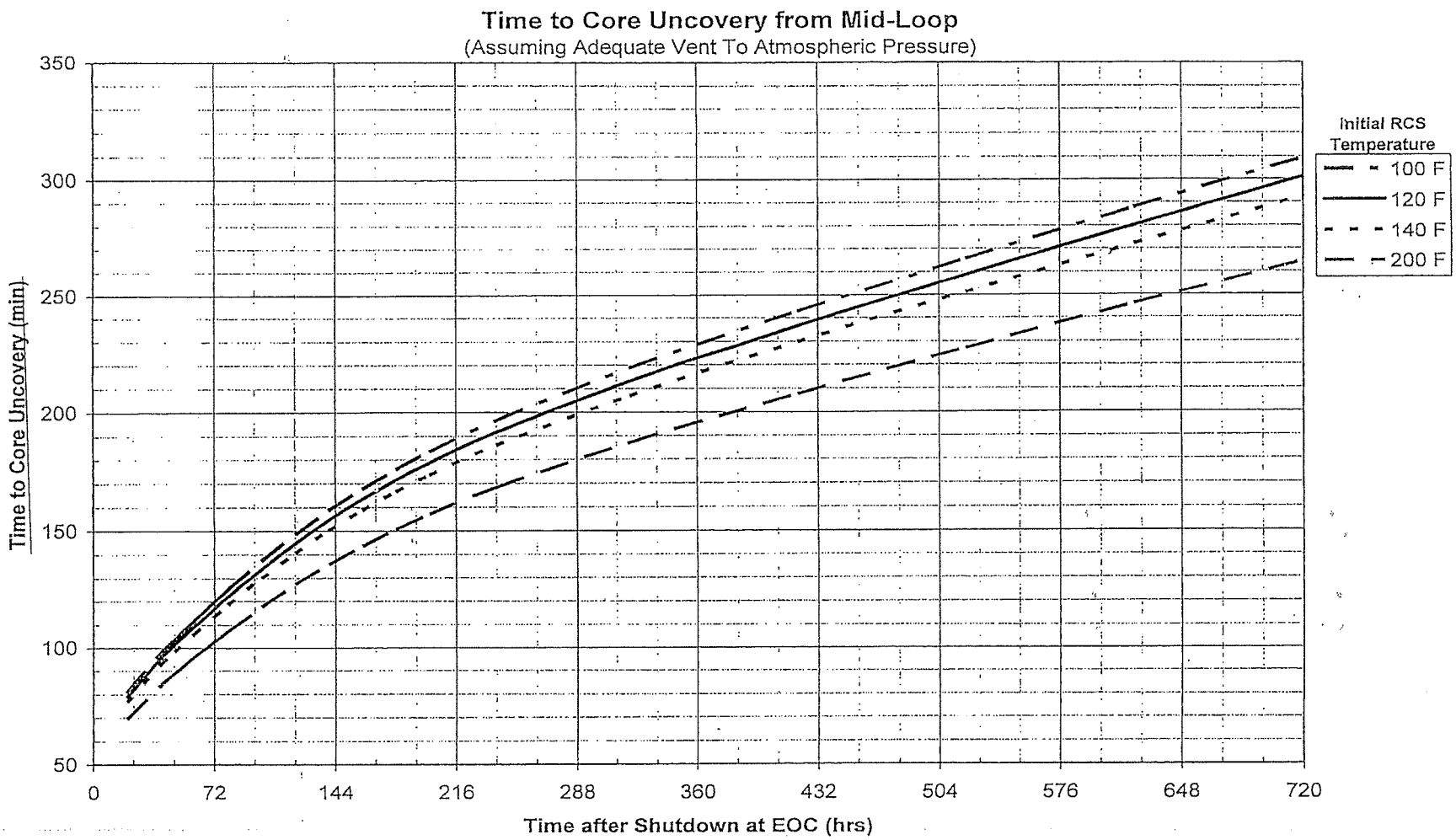

ENCLOSURE 1
(Page 1 of 9)

MINIMUM REQUIRED EQUIPMENT, PHASE I, LARGE DECAY HEAT LOAD AND RCS TEMP LESS THAN 200 DEGREES WITH RCS LOOPS FILLED

Function	Required Equipment	Contingency Action	Color Code
Decay Heat Removal	Two RHR Pumps	1. Take immediate action to repair the failed pump. 2. Go to 3/4-ONOP-050, LOSS OF RHR, for loss of RHR. 3. Maximize RCS inventory as much as is achievable. 4. Maintain RCS pressurized to 100 psig to meet loops filled criteria. 5. Maintain RCS temperature as low as possible. 6. Ensure Feed and Bleed Decay Heat Removal capability, using the HHSI pumps, is available. 7. Maintain Decay Heat Removal capability with at least two Steam Generators, including a source of feedwater. 8. Suspend any activities that would risk the remaining RHR, ICW, or CCW Pumps; EDG; and 4KV Bus. 9. Upon loss of both pumps, initiate actions to establish Containment Closure except for the equipment hatch. 10. Verify that the equipment hatch can be closed within the time frame to heat up to Mode 4 following a loss of shutdown cooling as predicted using the heatup rates of Figure 1. Station the necessary personnel at the hatch with direct communications to the RO.	1 – ORANGE 0 - RED
	Two RHR Heat Exchangers	1. Take action as described for RHR Pumps.	1 – ORANGE 0 - RED
	Two CCW Pumps	1. Go to 3/4-ONOP-030, COMPONENT COOLING WATER MALFUNCTION, for loss of CCW. 2. Carry out other actions per RHR pumps above.	1 – ORANGE 0 - RED

ENCLOSURE 1
(Page 2 of 9)

MINIMUM REQUIRED EQUIPMENT, PHASE I, LARGE DECAY HEAT LOAD AND RCS TEMP LESS THAN 200 DEGREES WITH RCS LOOPS FILLED

Function	Required Equipment	Contingency Action	Color Code
Decay Heat Removal (Cont'd)	Two CCW Heat Exchangers	1. Go to 3/4-ONOP-030, COMPONENT COOLING WATER MALFUNCTION, for loss of CCW. 2. Take action to restore the unavailable component to service. 3. Take other actions as described for RHR Pumps.	1 Hx – ORANGE 0 - RED
	Two ICW Pumps	1. Go to 3/4-ONOP-019, INTAKE COOLING WATER MALFUNCTION, for loss of ICW. 2. Suspend activities that may risk the remaining ICW pumps. 3. CCW cross-tie to the other unit may be appropriate. 4. Notify the Work Controls Manager, Operations Manager, Maintenance Manager, and Plant Manager.	1 – ORANGE 0 - RED
	Two ICW Headers	1. Verify that at least two ICW pumps and two CCW heat exchangers are aligned to the remaining ICW header. 2. Prior to removing an ICW header from service, verify that the basket strainer associated with the remaining header is clean. 3. Have a contingency plan, with responsible individuals designated, in place to restore the header to service.	1 – YELLOW 0 - RED
	Source of feedwater and a flowpath from one of the following: SGFP SSGFP Condensate PP Condensate Transfer PP SGWL PP	1. Take action to restore the unavailable component. 2. Restrict Activities that could potentially threaten RHR	0 - YELLOW
	2 Steam Dump to Atmosphere Valves	1. Take action to restore the unavailable component. 2. Restrict Activities that could potentially threaten RHR	0 – YELLOW

ENCLOSURE 1
(Page 3 of 9)

MINIMUM REQUIRED EQUIPMENT, PHASE I, LARGE DECAY HEAT LOAD AND RCS TEMP LESS THAN 200 DEGREES WITH RCS LOOPS FILLED

Function	Required Equipment	Contingency Action	Color Code
Inventory control	Two Charging Pumps (one with an available EDG power source to meet the requirement below).	1. Initiate action to repair the unavailable charging pump. 2. Notify the Operations, Work Controls, Maintenance and Plant Managers. 3. Verify the availability of at least two HHSI Pumps with suction aligned to an RWST with at least 20,000 gallons of water **AND** an available flowpath to the RCS. 4. Do not reduce RCS inventory, if possible take action to maximize RCS inventory. 5. Maintain RCS temperature as low as possible. 6. Suspend activities that would place any remaining charging pump and its power supply at risk.	1 – YELLOW 0 - ORANGE
	Flowpath from the Charging Pumps to the RCS (Regen Hx or RCP seals) and suction capability from BAST or RWST	1. Initiate action to repair the unavailable components. 2. Notify the Operations, Work Controls, Maintenance, and Plant Managers. 3. Verify the availability of two HHSI Pumps with suction aligned to an RWST with at least 20,000 gallons of water **AND** a flowpath available to the RCS.	0 – ORANGE 0 – RED, if no HHSI flowpath
	Two of four Primary Water Pumps	1. Initiate action to repair the unavailable components. 2. Notify Operations, Work Controls, Maintenance, and Plant Managers. 3. Verify capability to cross connect Primary Water from the opposite unit. 4. Verify the availability of the charging pump suction from the RWST.	1 – YELLOW 0 - ORANGE
	Two of four Boric Acid Pumps	1. Initiate action to repair the unavailable components. 2. Notify Operations, Work Controls, Maintenance, and Plant Managers. 3. Verify the availability of the charging pump suction from the RWST. 4. Verify the availability of two HHSI pumps with suction aligned to an RWST with at least 20,000 gallons of water **AND** an available flowpath to the RCS.	1 – YELLOW 0 - ORANGE

ENCLOSURE 1
(Page 4 of 9)

MINIMUM REQUIRED EQUIPMENT, PHASE I, LARGE DECAY HEAT LOAD AND RCS TEMP LESS THAN 200 DEGREES WITH RCS LOOPS FILLED

Function	Required Equipment	Contingency Action	Color Code
Inventory Control (Cont'd)	Two of four HHSI Pumps each with an emergency power supply and suction capability from an RWST with at least 20,000 gallons of water **AND** an available flowpath to the RCS.	1. Initiate action to restore the unavailable components. 2. Verify the availability of at least two charging pumps. 3. Maximize RCS inventory. 4. Maintain RCS temperature as low as possible. 5. Notify the Operations, Work Controls, Maintenance, and Plant Managers.	1 – YELLOW 0 - ORANGE
On-site and Off-site Power	Two Transformers capable of the below powering A or B 4KV Bus * • Startup • AUX on backfeed • Opposite unit startup transformer to **A** Bus • One **C** Bus transformer to **A** or **B** Bus	1. Go to 3/4-ONOP-004, LOSS OF OFF-SITE POWER, for loss of off-site power. 2. Go to 3/4-ONOP-092.3, STARTUP TRANSFORMER MALFUNCTION, for S/U transformer malfunction. 3. Initiate actions to return the required transformer to service. 4. Verify the availability of both EDGs. 5. Verify the availability of the station blackout tie. 6. Suspend activities that would risk the remaining power supplies. 7. Verify the availability of one C Bus to power A or B 4KV Bus. 8. Notify the Operations, Work Controls, Maintenance, and Plant Managers.	1 xfmr with SBO tie - YELLOW 1 xfmr without SBO tie - ORANGE 0 xfrm - RED

* Reference Step 5.1.1.29

ENCLOSURE 1
(Page 5 of 9)

MINIMUM REQUIRED EQUIPMENT, PHASE I, LARGE DECAY HEAT LOAD AND RCS TEMP LESS THAN 200 DEGREES WITH RCS LOOPS FILLED

Function	Required Equipment	Contingency Action	Color Code
On-site and Off-site Power	A, B and D 4KV Busses	1. Take action to restore the out-of-service components. Go to appropriate procedure below: 3/4-ONOP-004.2, LOSS OF A 4KV BUS 3/4-ONOP-004.3, LOSS OF B 4KV BUS 3/4-ONOP-004.5, LOSS OF D 4KV BUS 2. Verify at least two on-site sources of AC power are available. 3. For loss of Off-site power go to 3/4-ONOP-004, LOSS OF OFF-SITE POWER. 4. With A, B, or D 4KV Busses unavailable, verify the ability to power A or B Bus from one C Bus transformer. 5. With D 4KV Bus unavailable, maintain both associated unit EDGs available.	Loss of D Bus - YELLOW Loss of A or B Bus - ORANGE 1 - RED
	Two Emergency Diesel Generators on the Associated Unit	1. Take action to restore the unavailable EDG to service. 2. Suspend activities that may risk the Off-site power sources. 3. Verify availability of the station blackout tie. 4. Verify the ability to power A or B Bus from one C Bus transformer.	1 – YELLOW 0 - ORANGE
	Station Blackout Tie	1. Verify availability of both associated unit EDGs. 2. Suspend activities that may risk the Off-site power supplies. 3. Verify the ability to power A or B Bus from one C Bus transformer.	0 w/ C bus tie – YELLOW 0 w/o C bus tie – ORANGE

ENCLOSURE 1
(Page 6 of 9)

MINIMUM REQUIRED EQUIPMENT, PHASE I, LARGE DECAY HEAT LOAD AND RCS TEMP LESS THAN 200 DEGREES WITH RCS LOOPS FILLED

Function	Required Equipment	Contingency Action	Color Code
Reactivity Control	C_B> 0-OP-028.2 SDM Calculation	1. Take action to restore boron concentration (C_B) to > 0-OP-028.2 SDM Calculation. 2. Verify NO primary water additions in progress.	RED if C_B < 0-OP-028.2 SDM Calculation
Shutdown Monitoring Instrumentation	Two of four Source Range Instruments	1. Take action to restore the failed components. 2. Suspend activities that could reduce the available Shutdown Margin. 3. Notify the Operations, Work Controls, Maintenance, and Plant Managers.	1 – WHITE 0 - YELLOW
	ARMS Channels: Three Inside Containment #	1. Take action to restore the failed components. 2. Install temporary monitoring equipment in the affected area. 3. Suspend activities that may increase radiation levels in the affected area.	Loss of 1 or more - WHITE
	PRMS Channels: R-11, R-12, R-14, R-19	1. Take action to secure releases via the unmonitored pathway **OR** take action to continue releases as allowed by Technical Specifications. 2. Consider installation of temporary monitoring equipment.	Loss of 1 or more – WHITE
	2 Core Exit Thermocouples	1. Arrange with I&C for alternate readouts or monitoring of CETs if possible. 2. Verify that two channels of wide range T_{HOT} are available. 3. Maintain RCS greater than 10 percent Wide Range Pressurizer Level.	0 - YELLOW

One at a time may be OOS for calibration.

ENCLOSURE 1
(Page 7 of 9)

MINIMUM REQUIRED EQUIPMENT, PHASE I, LARGE DECAY HEAT LOAD AND RCS TEMP LESS THAN 200 DEGREES WITH RCS LOOPS FILLED

Function	Required Equipment	Contingency Action	Color Code
Shutdown Monitoring Instrumentation (Cont'd)	One Channel of Reactor Vessel Level HJTC (QSPDS)	1. Take action to restore at least one channel as soon as possible. 2. Maximize RCS inventory as much as is allowed by plant conditions. 3. Maintain RCS greater than 10 percent Wide Range Pressurizer Level.	0 - WHITE
	One Channel of Containment Water Level Indication	1. Take action to restore one channel to service as soon as possible.	0 - WHITE
	Two Channels of Containment Sump Level Indication	1. Restore two channels to service as soon as possible. 2. Suspend activities that may result in increased sump level. 3. Verify that any temporary drain hoses are not resulting in loss of RCS inventory at least once per shift.	1 – WHITE 0 - YELLOW
	One of Four Channels of Pressurizer Level Indication	1. Suspend activities which may result in RCS inventory loss.	0 - WHITE
	RCS Pressure Instruments PT-402, PT-403, and PT-405	1. Verify sufficient OMS trains are still available. 2. Secure power to any MOV which could result in RHR loss due to unwanted action from the unavailable pressure channel. (N/A if interlocks defeated.) 3. Notify the Operations, Work Controls, Maintenance, and Plant Managers.	0 – WHITE
	RCS Wide Range T_{HOT} and T_{COLD}: At least one channel per loop	1. Verify the availability of two CETs. 2. Verify that OMS controls are not affected by the unavailable channel.	Per loop, only T_{HOT} or T_{COLD} – WHITE

ENCLOSURE 1
(Page 8 of 9)

MINIMUM REQUIRED EQUIPMENT, PHASE I, LARGE DECAY HEAT LOAD AND RCS TEMP LESS THAN 200 DEGREES WITH RCS LOOPS FILLED

Function / Support Equipment	Required Equipment	Contingency Action	Color Code
Containment Closure	Equipment Hatch (capable of being closed with four bolts in accordance with Enclosure 13.) *	1. Suspend activities that risk required Decay Heat Removal Equipment. 2. Initiate action to restore the capability to close the hatch in the required time frame. 3. Notify the Maintenance, Operations, Work Controls, and Plant Managers.	Required Time Met - GREEN Required Time Not Met (TCN Required) - YELLOW
	Personnel Hatch (capable of being closed in accordance with Enclosure 13.) *	1. Suspend activities that risk required Decay Heat Removal Equipment. 2. Initiate action to restore the capability to close the hatch in the required time frame. 3. Notify the Maintenance, Operations, Work Controls, and Plant Managers.	
	Containment Penetrations (At least one valve in each penetration that is **NOT** pressurized should be kept closed, or capable of being closed in accordance with Enclosure 13.) Exceptions may be taken under administrative controls for testing, surveillance, and maintenance.	1. If an exception is taken, and at least one valve in the penetration is capable of closure, either manually from the Control Room or locally, the penetration shall be logged on Attachment 3. The log entry shall identify the actions necessary to close the penetration. 2. If an exception is taken, and the penetration is **NOT** capable of being closed by at least one valve, a **TCN** with a contingency plan to achieve closure is required **PRIOR** to authorizing work on the penetration. 3. Initiate action to restore closure capability. 4. Suspend activities that would risk required Decay Heat Removal Equipment. 5. Notify the Maintenance, Operations, Work Controls, and Plant Managers.	
Risk Significant Equipment	One Auxiliary Building Exhaust Fan	1. **IF** out-of-service time is to exceed 119 hours, **THEN** notify the Work Controls Manager and Plant Manager. 2. Assess the impact on the operating unit. 3. Assess the impact on the running RHR Pump.	0 - YELLOW

* Capability includes provisions for the unavailability of AC power and environmental conditions expected.

ENCLOSURE 1
(Page 9 of 9)

MINIMUM REQUIRED EQUIPMENT, PHASE I, LARGE DECAY HEAT LOAD AND RCS TEMP LESS THAN 200 DEGREES WITH RCS LOOPS FILLED

Support Equipment	Required Equipment	Contingency Action	Color Code
Risk Significant Equipment (Cont'd)	One Diesel Driven Instrument Air Compressor **AND** the Instrument Air Cross Tie Lines	1. Verify the availability of a portable Instrument Air Compressor. 2. Verify the availability of the Instrument Air Cross Tie. 3. **IF** out-of-service time is to exceed 548 hours, **THEN** notify the Work Controls Manager and Plant Manager. 4. Assess the impact on the operating unit.	0 – YELLOW
	Vital DC Room HVAC - two of three units required E16D, E16E, E16F	1. Monitor temperature in the Inverter and DC Equipment Rooms. 2. Install portable fans **OR** verify availability of portable fans. 3. Assess the impact on the operating unit.	1 – WHITE 0 - YELLOW
	Service Water Pumps - One Electric pump **AND** one Diesel driven pump	1. Assess the impact on the operating unit.	Loss of 1 or more - WHITE

ENCLOSURE 2
(Page 1 of 9)

MINIMUM REQUIRED EQUIPMENT, PHASE I, LARGE DECAY HEAT LOAD AND RCS TEMP LESS THAN 200 DEGREES WITHOUT RCS LOOPS AVAILABLE

Function	Required Equipment	Contingency Action	Color Code
Decay Heat Removal	Two RHR Pumps	1. Take immediate action to repair the failed pump. 2. Go to 3/4-ONOP-050, LOSS OF RHR, for loss of RHR. 3. Establish or maintain Reactor Vessel level higher than three feet below the vessel flange. Maximize RCS inventory as much as is achievable. 4. Maintain RCS temperature as low as possible. 5. Ensure Feed and Bleed decay heat removal capability, using the HHSI pumps, is available. 6. Suspend any activities that would risk the remaining RHR, ICW, or CCW Pumps; EDG; **AND** 4KV Bus. 7. Upon loss of both pumps, initiate actions to establish Containment Closure except for the equipment hatch. 8. Verify that the equipment hatch can be closed within the time frame to heat up to Mode 4 following a loss of shutdown cooling as time to saturation predicted using the Figure 2. Station the necessary personnel at the hatch with direct communications to the RO. 9. Investigate the possibility of flooding the Reactor Cavity to a height of 23 feet above the Reactor Vessel Flange. 10. If RCS inventory is at Mid-Loop, then refer to Figure 5, Time to Core Uncovery from Mid-Loop.	1 – ORANGE 0 - RED
	Two RHR Heat Exchangers	1. Take action as described for RHR Pumps.	1 Hx – ORANGE 0 Hx – RED
	Two CCW Pumps*	1. Go to 3/4-ONOP-030, COMPONENT COOLING WATER MALFUNCTION, for loss of CCW. 2. Carry out other actions as described per RHR pumps above.	1 – ORANGE 0 - RED

* Powered from independent power sources if RCS level lower than 3 feet below the vessel flange. [Commitment Step – 2.3.1]

ENCLOSURE 2
(Page 2 of 9)

MINIMUM REQUIRED EQUIPMENT, PHASE I, LARGE DECAY HEAT LOAD AND RCS TEMP LESS THAN 200 DEGREES WITHOUT RCS LOOPS AVAILABLE

Function	Required Equipment	Contingency Action	Color Code
Decay Heat Removal (Cont'd)	Two CCW Heat Exchangers	1. Go to 3/4-ONOP-030, COMPONENT COOLING WATER MALFUNCTION, for loss of CCW. 2. Take action to restore the unavailable component to service. 3. Take other actions as described for RHR Pumps.	1 Hx – ORANGE 0 Hx - RED
	Two ICW Pumps*	1. Go to 3/4-ONOP-019, INTAKE COOLING WATER MALFUNCTION, for loss of ICW. 2. Suspend activities that may risk the remaining ICW Pumps. 3. CCW cross-tie to the other unit may be appropriate. 4. Notify the Work Controls Manager, Operations Manager, Maintenance Manager, and Plant Manager.	1 – ORANGE 0 - RED
	Two ICW Headers	1. Verify at least two ICW pumps **AND** two CCW heat exchangers are aligned to the remaining ICW header. 2. Prior to removing an ICW header from service, verify that the basket strainer associated with the remaining header is clean. 3. Have a contingency plan, with responsible individuals designated, in place to restore the header to service.	1 – YELLOW 0 - RED

* Powered from independent power sources if RCS level lower than 3 feet below the vessel flange. [Commitment Step – 2.3.1]

ENCLOSURE 2
(Page 3 of 9)

MINIMUM REQUIRED EQUIPMENT, PHASE I, LARGE DECAY HEAT LOAD AND RCS TEMP LESS THAN 200 DEGREES WITHOUT RCS LOOPS AVAILABLE

Function	Required Equipment	Contingency Action	Color Code
Inventory Control	Two Charging Pumps (One with an available EDG power source. Both with an available EDG to meet the requirement below.*)	1. Initiate action to repair the unavailable charging pump. 2. Notify the Operations, Work Controls, Maintenance and Plant Managers. 3. Verify the availability of two HHSI Pumps with suction aligned to an RWST with at least 20,000 gallons of water **AND** an available flowpath to the RCS. 4. Do not reduce RCS inventory; if possible, take action to maximize RCS inventory. 5. Maintain RCS temperature as low as possible. 6. Suspend activities that would place any remaining charging pump and its power supply at risk.	1 – ORANGE 0 - RED
	Flowpath from the charging pump to the RCS (Regen Hx or RCP seals) and suction capability from BAST or RWST	1. Initiate action to repair the unavailable components. 2. Notify the Operations, Work Controls, Maintenance, and Plant Managers. 3. Verify the availability of two HHSI Pumps with suction aligned to an RWST with at least 20,000 gallons of water **AND** an available flowpath to the RCS.	0 – ORANGE 0 – RED if no HHSI flowpath
	Two of four Primary Water Pumps	1. Initiate action to repair the unavailable components. 2. Notify Operations, Work Controls, Maintenance, and Plant Managers. 3. Verify capability to cross connect Primary Water from opposite unit. 4. Verify the availability of the charging pump suction from the RWST.	1 – YELLOW 0 - ORANGE
	Two of four Boric Acid Pumps	1. Initiate action to repair the unavailable components. 2. Notify Operations, Work Controls, Maintenance, and Plant Managers. 3. Verify the availability of the charging pump suction from the RWST. 4. Verify the availability of two HHSI pumps with suction aligned to an RWST with at least 20,000 gallons of water **AND** an available flowpath to the RCS.	1 – YELLOW 0 - ORANGE

* Two charging pumps are required with available EDG power source, if RCS level is lower than 3 feet below the vessel flange.
[Commitment Step - 2.3.1]

ENCLOSURE 2
(Page 4 of 9)

MINIMUM REQUIRED EQUIPMENT, PHASE I, LARGE DECAY HEAT LOAD AND RCS TEMP LESS THAN 200 DEGREES WITHOUT RCS LOOPS AVAILABLE

Function	Required Equipment	Contingency Action	Color Code
Inventory Control (Cont'd)	Two of four HHSI Pumps each with an emergency power supply and suction capability from an RWST with at least 20,000 gallons of water **AND** an available flowpath to the RCS*	1. Initiate action to restore the unavailable components. 2. Verify the availability of at least two charging pumps. 3. Maximize RCS inventory. 4. Maintain RCS temperature as low as possible. 5. Notify the Operations, Work Controls, Maintenance, and Plant Managers.	1–YELLOW 0-ORANGE
	RCS Inventory at or above 5% level in pressurizer. (Color code determination only)	N/A	YELLOW drained to higher than 3 feet below flange ORANGE Drained hot leg mid nozzle
On-site and Off-site Power	Two of the below listed Transformers capable of powering A **OR** B 4KV Bus • Startup • AUX on backfeed • Opposite unit startup transformer to A Bus • Either unit's C Bus transformer to **A OR B** Bus	1. Go to 3/4-ONOP-004, LOSS OF OFF-SITE POWER, for loss of off-site power. 2. Go to 3/4-ONOP-092.3, STARTUP TRANSFORMER MALFUNCTION, for S/U transformer malfunction. 3. Initiate actions to return the required transformer to service. 4. Verify the availability of both EDGs. 5. Verify the availability of the station blackout tie. 6. Suspend activities that would risk the remaining power supplies. 7. Verify the ability of one C Bus to power A **OR** B 4KV Bus. 8. Notify the Operations, Work Controls, Maintenance, and Plant Managers.	1 trf – ORANGE 0 trf – RED

* Both hot and cold leg injection path are required if RCS level is lower than 3 feet below the vessel flange.
[Commitment Step – 2.3.1]

ENCLOSURE 2
(Page 5 of 9)

MINIMUM REQUIRED EQUIPMENT, PHASE I, LARGE DECAY HEAT LOAD AND RCS TEMP LESS THAN 200 DEGREES WITHOUT RCS LOOPS AVAILABLE

Function	Required Equipment	Contingency Action	Color Code
On-site and Off-site Power	A, B **AND** D 4KV Busses	1. Take action to restore the out-of-service components. Go to appropriate procedure below: 3/4-ONOP-004.2, LOSS OF A 4KV BUS 3/4-ONOP-004.3, LOSS OF B 4KV BUS 3/4-ONOP-004.5, LOSS OF D 4KV BUS 2. Verify at least two on-site sources of AC power are available. 3. For loss of Off-site power go to 3/4-ONOP-004, LOSS OF OFF-SITE POWER. 4. With A, B, or D 4KV Busses unavailable, verify the ability to power A or B Bus from one C Bus transformer. 5. With D 4KV Bus unavailable, maintain both associated unit EDGs available.	Loss of D bus – YELLOW Loss of A or B Bus – ORANGE 1 - RED
	Two Emergency Diesel Generators on the Associated Unit	1. Take action to restore the unavailable EDG to service. 2. Suspend activities that may risk the Off-site power sources. 3. Verify availability of the station blackout tie. 4. Verify the ability to power A **OR** B Bus from one C Bus transformer.	1 – YELLOW 0 – ORANGE
	Station Blackout Tie	1. Verify availability of both associated unit EDGs. 2. Suspend activities that may risk the Off-site power supplies. 3. Verify the ability to power A **OR** B Bus from one C Bus transformer.	0 w/ C bus tie – YELLOW 0 w/o C bus tie – ORANGE

ENCLOSURE 2
(Page 6 of 9)

MINIMUM REQUIRED EQUIPMENT, PHASE I, LARGE DECAY HEAT LOAD AND RCS TEMP LESS THAN 200 DEGREES WITHOUT RCS LOOPS AVAILABLE

Function	Required Equipment	Contingency Action	Color Code
Reactivity Control	C_B > 0-OP-028.2 SDM Calculation for Mode 5, or > Required Refueling C_B for Mode 6	1. Take action to restore boron concentration (C_B) to > 0-OP-028.2 SDM Calculation, or > Required Refueling C_B as applicable. 2. Verify NO primary water additions in progress.	RED if C_B < the required conc
Shutdown Monitoring Instrumentation	Two of Four Source Range Instruments (1 with Audible Count Rate in Mode 6)	1. Take action to restore the failed components. 2. Suspend activities that could reduce the available Shutdown Margin. 3. Notify the Operations, Work Controls, Maintenance, and Plant Managers.	1/4 - WHITE 0/4 - YELLOW
	ARMS Channels: Three Inside Containment #	1. Take action to restore the failed components. 2. Install temporary monitoring equipment in the affected area. 3. Suspend activities that may increase radiation levels in the affected area.	Loss of 1 or more - WHITE
	PRMS Channels: R-11, R-12, R-14	1. Take action to secure releases via the unmonitored pathway **OR** take action to continue releases as allowed by Technical Specifications. 2. Consider installation of temporary monitoring equipment.	Loss of 1 or more - WHITE
	2 Core Exit Thermocouples (Required when the reactor vessel head is fully tensioned.)*	1. Arrange with I&C for alternate readouts or monitoring of CETs if possible. 2. Verify that two channels of wide range T_{HOT} are available. 3. Maintain RCS greater than 10 percent Wide Range Pressurizer Level.	0 YELLOW
	One Channel of Reactor Vessel Level HJTC (QSPDS) (Required when the reactor vessel head is fully tensioned.)	1. Take action to restore at least one channel as soon as possible. 2. Maximize RCS inventory as much as is allowed by plant conditions. 3. Maintain RCS greater than 10 percent Wide Range Pressurizer Level. 4. If OOS as part of reactor disassembly, verify two channels of the reactor vessel draindown level indication available, one with control room readout. **IF** <2 channels available, maintain RCS level higher than 3 feet below the vessel flange.	0 - WHITE

* A minimum of two (2) CETs are required whenever RCS level is lower than 3 feet below the vessel flange.
[Commitment Step – 2.3.1]

\# In containment, one at a time may be OOS for calibration, if RCS level is NOT lower than 3 feet below the vessel flange.
[Commitment Step – 2.3.1]

ENCLOSURE 2
(Page 7 of 9)

MINIMUM REQUIRED EQUIPMENT, PHASE I, LARGE DECAY HEAT LOAD AND RCS TEMP LESS THAN 200 DEGREES WITHOUT RCS LOOPS AVAILABLE

Function	Required Equipment	Contingency Action	Color Code
Shutdown Monitoring Instrumentation (Cont'd)	One Channel of Containment Water Level Indication	1. Take action to restore one channel to service as soon as possible.	0 - WHITE
	Two Channels of Containment Sump Level Indication*	1. Restore two channels to service as soon as possible. 2. Suspend activities that may result in increased sump level. 3. Verify that any temporary drain hoses are not resulting in loss of RCS inventory at least once per shift.	1 – WHITE 0 - YELLOW
	One Pressurizer Cold Calibrated Level Indication ##, **	1. Suspend activities which may result in RCS inventory loss. 2. Monitor temporary drain hoses for loss of RCS inventory at least once per shift. 3. Consider installation of temporary level hose as appropriate for plant conditions.	0 - WHITE
	RCS Pressure Instruments PT-402, PT-403, **AND** PT-405	1. Verify sufficient OMS trains are still available. 2. Notify the Operations, Work Controls, Maintenance, and Plant Managers.	1 – WHITE 0 – YELLOW
	RCS Wide Range T_{HOT} and T_{COLD}: At least one channel per loop	1. Verify the availability of two CETs. 2. Verify that OMS controls are not affected by the unavailable channel.	For each loop only T_{HOT} or T_{COLD} – WHITE None – YELLOW
	Reactor Vessel Draindown Level Indication: Two of three channels available, (includes level hose) one with Control Room indication #, ***	1. Maintain RCS level higher than three (3) feet below the vessel flange. 2. Do not reduce RCS inventory until two channels are available. 3. Investigate the possibility of verifying Reactor Vessel Level via some other means, (i.e., level hose or QSPDS).	1 – YELLOW 0 – ORANGE requires Control Room indication

\# The level hose **AND** both draindown level indicators are required for RCS level lower than 3 feet below the vessel flange.
[Commitment Step – 2.3.1]

May be OOS during depressurization of RCS for refill of reference leg.

* Two channels are required if RCS level is lower than 3 feet below the vessel flange.
[Commitment Step 2.3.1]

** **IF** RCS level is on scale in reactor vessel draindown level instruments, **THEN** pressurizer cold calibrated level instrument not required.

*** **IF** pressurizer cold calibrated level indication is greater than 10%, **THEN** reactor vessel draindown level indication is not required.

ENCLOSURE 2
(Page 8 of 9)

MINIMUM REQUIRED EQUIPMENT, PHASE I, LARGE DECAY HEAT LOAD AND RCS TEMP LESS THAN 200 DEGREES WITHOUT RCS LOOPS AVAILABLE

Function / Support Equipment	Required Equipment	Contingency Action	Color Code
Containment Closure	Equipment Hatch (capable of being closed with four bolts in accordance with Enclosure 13) * +	1. Suspend activities that risk required Decay Heat Removal Equipment. 2. Initiate action to restore the capability to close the hatch in the required time frame. 3. Notify the Maintenance, Operations, Work Controls, and Plant Managers.	Required Time Met - GREEN Required Time Not Met (TCN Required) - YELLOW Required Time Not Met During Reduced Inventory - ORANGE
	Personnel Hatch (capable of being closed in accordance with Enclosure 13) * +	1. Suspend activities that risk required Decay Heat Removal Equipment. 2. Initiate action to restore the capability to close the hatch in the required time frame. 3. Notify the Maintenance, Operations, Work Controls, and Plant Managers.	
	Containment Penetrations (At least one valve in each penetration that is **NOT** pressurized should be kept closed or capable of being closed in accordance with Enclosure 13) # Exceptions may be taken under administrative controls for testing, surveillance, and maintenance. *	1. If an exception is taken, and at least one valve in the penetration is capable of closure, either manually from the Control Room or locally, the penetration shall be logged on Attachment 3. The log entry shall identify the actions necessary to close the penetration. 2. If an exception is taken, and the penetration is **NOT** capable of being closed by at least one valve, a **TCN** with a contingency plan to achieve closure is required **PRIOR** to authorizing work on the penetration. 3. If an exception is taken while RCS level is lower than 3' below the vessel flange, and the penetration is NOT capable of being closed by at least one valve, a TCN with a contingency plan to achieve closure and meet 20 psi containment pressure is required PRIOR to authorizing work on the penetration. 4. Initiate action to restore closure capability. 5. Suspend activities that would risk required Decay Heat Removal Equipment. 6. Notify the Maintenance, Operations, Work Controls, and Plant Managers.	
Risk Significant Equipment	One Auxiliary Building Exhaust Fan	1. **IF** out-of-service time is to exceed 119 hours, **THEN** notify the Work Controls Manager and Plant Manager. 2. Assess the impact on the operating unit. 3. Assess the impact on the running RHR pump.	0 - YELLOW

* If RCS level lower than 3 feet below the vessel flange prior to fuel offload, control in accordance with 3/4-OP-041.9, until RCS level returns above 3 feet below the vessel flange. [Commitment Step – 2.3.1]

\# See Substep 5.1.1.19.c for requirements if RCS level lower than 3 feet below the vessel flange. [Commitment Step – 2.3.1]

\+ Capability includes provisions for the unavailability of AC power and environmental conditions expected.

ENCLOSURE 2
(Page 9 of 9)

MINIMUM REQUIRED EQUIPMENT, PHASE I, LARGE DECAY HEAT LOAD AND RCS TEMP LESS THAN 200 DEGREES WITHOUT RCS LOOPS AVAILABLE

Support Equipment	Required Equipment	Contingency Action	Color Code
Risk Significant Equipment (Cont'd)	One Diesel Driven Instrument Air Compressor **AND** the Instrument Air Cross Tie Lines	1. Verify the availability of a portable Instrument Air Compressor. 2. Verify the availability of the Instrument Air Cross Tie. 3. If out-of-service time is to exceed 548 hours, notify the Work Controls Manager and Plant Manager. 4. Assess the impact on the operating unit.	0 – YELLOW
	Vital DC Room HVAC - two of three units required E16D E16E E16F	1. Monitor temperature in the Inverter and DC Equipment Rooms. 2. Install portable fans or verify availability of portable fans. 3. Assess the impact on the operating unit.	1 – WHITE 0 – YELLOW
	Service Water Pumps - One Electric pump **AND** one Diesel driven pump	1. Assess the impact on the operating unit.	Loss of 1 or more - WHITE

ENCLOSURE 3
(Page 1 of 8)

MINIMUM REQUIRED EQUIPMENT, PHASE I, LARGE DECAY HEAT LOAD AND REACTOR CAVITY FLOODED GREATER THAN 23 FEET ABOVE THE VESSEL FLANGE

Function	Required Equipment	Contingency Action	Color Code
Decay Heat Removal	Two RHR Pumps	1. Take immediate action to repair the failed pump. 2. Go to 3/4-ONOP-050, LOSS OF RHR, for loss of RHR. 3. Maintain Reactor Cavity level greater than 23 feet above the vessel flange. 4. Maintain RCS temperature as low a possible. 5. Suspend any activities that would risk the remaining RHR, ICW, or CCW Pumps; EDG; and 4KV Bus. 6. Upon loss of both pumps, initiate actions to establish Containment Closure except for the equipment hatch. 7. Verify that the equipment hatch can be closed within the time frame specified in Enclosure 13. Station the necessary personnel at the hatch with direct communications to the RO.	1 – YELLOW 0 - RED
	Two RHR Heat Exchangers	1. Take action as described for RHR Pumps.	1 – YELLOW 0 - RED
	Two CCW Pumps	1. Go to 3/4-ONOP-030, COMPONENT COOLING WATER MALFUNCTION, for loss of CCW. 2. Carry out other actions per RHR pumps above.	1 – YELLOW 0 – RED

ENCLOSURE 3
(Page 2 of 8)

MINIMUM REQUIRED EQUIPMENT, PHASE I, LARGE DECAY HEAT LOAD AND REACTOR CAVITY FLOODED GREATER THAN 23 FEET ABOVE THE VESSEL FLANGE

Function	Required Equipment	Contingency Action	Color Code
Decay Heat Removal (Cont'd)	Two CCW Heat Exchangers	1. Go to 3/4-ONOP-030, COMPONENT COOLING WATER MALFUNCTION, for loss of CCW. 2. Take action to restore the unavailable component to service. 3. Take other actions as described for RHR Pumps.	1 – ORANGE 0 - RED
	Two ICW Pumps	1. Go to 3/4-ONOP-019, INTAKE COOLING WATER MALFUNCTION, for loss of ICW. 2. Suspend activities that may risk the remaining ICW Pumps. 3. CCW cross-tie to the other unit may be appropriate. 4. Notify the Work Controls Manager, Operations Manager, Maintenance Manager, and Plant Manager.	1 – YELLOW 0 - RED
	Two ICW Headers	1. Verify that at least two ICW pumps **AND** two CCW heat exchangers are aligned to the remaining ICW header. 2. Prior to removing an ICW header from service, verify that the basket strainer associated with the remaining header is clean. 3. Have a contingency plan, with responsible individuals designated, in place to restore the header to service.	1 – YELLOW 0 – RED

ENCLOSURE 3
(Page 3 of 8)

MINIMUM REQUIRED EQUIPMENT, PHASE I, LARGE DECAY HEAT LOAD AND REACTOR CAVITY FLOODED GREATER THAN 23 FEET ABOVE THE VESSEL FLANGE

Function	Required Equipment	Contingency Action	Color Code
Inventory Control	Two Charging Pumps (one with an available EDG power source).	1. Initiate action to repair the unavailable charging pump. 2. Notify the Operations, Work Controls, Maintenance and Plant Managers. 3. Verify the availability of two HHSI Pumps with suction aligned to an RWST with at least 20,000 gallons of water **AND** an available flowpath to the RCS. 4. Do not reduce RCS inventory; if possible, take action to maximize RCS inventory. 5. Maintain RCS temperature as low as possible. 6. Suspend activities that would place any remaining charging pump and its power supply at risk.	1 – YELLOW 0 - ORANGE
	Flowpath from the charging pump to the RCS (Regen Hx or RCP seals) and suction capability from BAST or RWST	1. Initiate action to repair the unavailable components. 2. Notify the Operations, Work Controls, Maintenance, and Plant Managers. 3. Verify the availability of two HHSI Pumps with suction aligned to an RWST with at least 20,000 gallons of water **AND** an available flowpath to the RCS.	0- ORANGE 0 – RED if no HHSI flowpath
	One of four Primary Water Pump	1. Initiate action to repair the unavailable component. 2. Notify Operations, Work Controls, Maintenance, and Plant Managers. 3. Verify capability to cross connect Primary Water from opposite unit. 4. Verify the availability of the charging pump suction from the RWST.	0 – YELLOW
	Two of four Boric Acid Pumps	1. Initiate action to repair the unavailable components. 2. Notify Operations, Work Controls, Maintenance, and Plant Managers. 3. Verify the availability of the charging pump suction from the RWST. 4. Verify the availability of two HHSI pumps with suction aligned to an RWST with at least 20,000 gallons of water **AND** an available flowpath to the RCS.	1 – YELLOW 0 – ORANGE

ENCLOSURE 3
(Page 4 of 8)

MINIMUM REQUIRED EQUIPMENT, PHASE I, LARGE DECAY HEAT LOAD AND REACTOR CAVITY FLOODED GREATER THAN 23 FEET ABOVE THE VESSEL FLANGE

Function	Required Equipment	Contingency Action	Color Code
Inventory Control (Cont'd)	Two of four HHSI Pumps each with an emergency power supply and suction capability from an RWST with at least 20,000 gallons of water **AND** an available flowpath to the RCS.	1. Initiate action to restore the unavailable components. 2. Verify the availability of at least two charging pumps. 3. Maximize RCS inventory. 4. Maintain RCS temperature as low as possible. 5. Notify the Operations, Work Controls, Maintenance, and Plant Managers.	1 – YELLOW 0 – ORANGE
On-site and Off-site Power	Two Transformers capable of powering A **OR** B 4KV Bus * • Startup • AUX on backfeed • Opposite unit startup transformer to A Bus • One C Bus transformer to **A OR B** Bus	1. Go to 3/4-ONOP-004, LOSS OF OFF-SITE POWER, for loss of off-site power. 2. Go to 3/4-ONOP-092.3, STARTUP TRANSFORMER MALFUNCTION, for S/U transformer malfunction. 3. Initiate actions to return the required transformer to service. 4. Verify the availability of both EDGs. 5. Verify the availability of the station blackout tie. 6. Suspend activities that would risk the remaining power supplies. 7. Verify the availability of one C Bus to power A or B 4KV Bus 8. Notify the Operations, Work Controls, Maintenance, and Plant Managers.	1 xfmr with SBO tie - YELLOW 1 xfmr without SBO tie - ORANGE 0 xfrm - RED

* Reference Step 5.1.1.29

ENCLOSURE 3
(Page 5 of 8)

MINIMUM REQUIRED EQUIPMENT, PHASE I, LARGE DECAY HEAT LOAD AND REACTOR CAVITY FLOODED GREATER THAN 23 FEET ABOVE THE VESSEL FLANGE

Function	Required Equipment	Contingency Action	Color Code
On-site and Off-site Power (Cont'd)	A, B **AND** D 4KV Busses	1. Except during refueling outage, scheduled bus outages (one bus at a time), take action to restore the out-of-service components. Go to the appropriate procedure below: 3/4-ONOP-004.2, LOSS OF A 4KV BUS 3/4-ONOP-004.3, LOSS OF B 4KV BUS 3/4-ONOP-004.5, LOSS OF D 4KV BUS 2. Verify at least two on-site sources of AC power are available. 3. For loss of Off-site power go to 3/4-ONOP-004, LOSS OF OFF-SITE POWER. 4. With A, B, **OR** D 4KV Busses unavailable, verify the ability to power A or B Bus from one C Bus transformer. 5. With D 4KV Bus unavailable, maintain both associated unit EDGs available.	2 – YELLOW Loss of D Bus and A or B - ORANGE Loss of A and B Busses - RED
	Two Emergency Diesel Generators on the Associated Unit	1. Take action to restore the unavailable EDG to service. 2. Suspend activities that may risk the Off-site power sources. 3. Verify availability of the station blackout tie. 4. Verify the ability to power A **OR** B Bus from one C Bus transformer.	1 – YELLOW 0 - ORANGE
	Station Blackout Tie	1. Verify availability of both associated unit EDGs. 2. Suspend activities that may risk the Off-site power supplies. 3. Verify the ability to power A **OR** B Bus from one C Bus transformer.	0 w/ C bus tie – YELLOW 0 w/o C bus tie - ORANGE

ENCLOSURE 3
(Page 6 of 8)

**MINIMUM REQUIRED EQUIPMENT, PHASE I,
LARGE DECAY HEAT LOAD AND REACTOR CAVITY
FLOODED GREATER THAN 23 FEET ABOVE THE VESSEL FLANGE**

Function	Required Equipment	Contingency Action	Color Code
Reactivity Control	C_B > Required Refueling C_B	1. Take actions to increase boron concentration (C_B). 2. Suspend core alterations if in progress until C_B > Required Refueling C_B 3. Verify NO primary water additions to the refueling cavity in progress.	RED if < Required Refueling C_B
Shutdown Monitoring Instrumentation	Two of four Source Range Instruments 1 with Audible Count Rate	1. Take action to restore the failed components. 2. Suspend activities that could reduce the available Shutdown Margin. 3. Notify the Operations, Work Controls, Maintenance, and Plant Managers.	1/4 - WHITE 0/4 - YELLOW Audible CR may be inoperable if no fuel movement in progress
	ARMS Channels: Three Inside Containment One Spent Fuel Pool #	1. Take action to restore the failed components. 2. Install temporary monitoring equipment in the affected area. 3. Suspend activities that may increase radiation levels in the affected area.	Loss of 1 or more - WHITE
	PRMS Channels: R-11, R-12, R-14	1. Take action to secure releases via the unmonitored pathway **OR** take action to continue releases as allowed by Technical Specifications. 2. Consider installation of temporary monitoring equipment.	Loss of 1 or more - WHITE
	One Channel of Containment Water Level Indication	1. Take action to restore one channel to service as soon as possible.	0 - WHITE
	Two Channels of Containment Sump Level Indication	1. Restore two channels to service as soon as possible. 2. Suspend activities that may result in increased sump level. 3. Verify that any temporary drain hoses are not resulting in loss of RCS inventory at least once per shift.	1 – WHITE 0 - YELLOW

In containment, one at a time may be OOS for calibration.

ENCLOSURE 3
(Page 7 of 8)

MINIMUM REQUIRED EQUIPMENT, PHASE I, LARGE DECAY HEAT LOAD AND REACTOR CAVITY FLOODED GREATER THAN 23 FEET ABOVE THE VESSEL FLANGE

Function / Support Equipment	Required Equipment	Contingency Action	Color Code
Containment Closure	Equipment Hatch (capable of being closed with four bolts in accordance with Enclosure 13)*	1. Suspend activities that risk required Decay Heat Removal Equipment. 2. Initiate action to restore the capability to close the hatch in the required time frame. 3. Notify the Maintenance, Operations, Work Controls, and Plant Managers.	Required Time Met - GREEN Required Time Not Met, Core Alts NOT in Progress (TCN Required) - YELLOW Required Time Not Met, During Core Alts - ORANGE
	Personnel Hatch (capable of being closed in accordance with Enclosure 13)*	1. Suspend activities that risk required Decay Heat Removal Equipment. 2. Initiate action to restore the capability to close the hatch in the required time frame. 3. Notify the Maintenance, Operations, Work Controls, and Plant Managers.	
	Containment Penetrations (At least one valve in each penetration that is **NOT** pressurized should be kept closed or capable of being closed in accordance with Enclosure 13) Exceptions may be taken under administrative controls for testing, surveillance, and maintenance.	1. If an exception is taken, and at least one valve in the penetration is capable of closure, either manually from the Control Room or locally, the penetration shall be logged on Attachment 3. The log entry shall identify the actions necessary to close the penetration. 2. If an exception is taken, and the penetration is **NOT** capable of being closed by at least one valve, a **TCN** with a contingency plan to achieve closure is required **PRIOR** to authorizing work on the penetration. 3. Initiate action to restore closure capability. 4. Suspend activities that would risk required Decay Heat Removal Equipment. 5. Notify the Maintenance, Operations, Work Controls, and Plant Managers.	
Risk Significant Equipment	One Auxiliary Building Exhaust Fan	1. **IF** out-of-service time is to exceed 119 hours, **THEN** notify the Work Controls Manager and Plant Manager. 2. Assess the impact on the operating unit. 3. Assess the impact on the running RHR pump.	0 - YELLOW

* Capability includes provisions for the unavailability of AC power and environmental conditions expected.

ENCLOSURE 3
(Page 8 of 8)

MINIMUM REQUIRED EQUIPMENT, PHASE I, LARGE DECAY HEAT LOAD AND REACTOR CAVITY FLOODED GREATER THAN 23 FEET ABOVE THE VESSEL FLANGE

System / Support Equipment	Required Equipment	Contingency Action	Color Code
Risk Significant Equipment (Cont'd)	One Diesel Driven Instrument Air Compressor **AND** the Instrument Air Cross Tie Lines	1. Verify the availability of a portable Instrument Air Compressor. 2. Verify the availability of the Instrument Air Cross Tie. 3. If out-of-service time is to exceed 548 hours, notify the Work Controls Manager and Plant Manager. 4. Assess the impact on the operating unit.	0 – YELLOW
	Vital DC Room HVAC - two of three units required E16D, E16E, E16F	1. Monitor temperature in the Inverter **AND** DC Equipment Rooms. 2. Install portable fans or verify availability of portable fans. 3. Assess the impact on the operating unit.	1 – WHITE 0 – YELLOW
	Service Water Pumps - One Electric pump **AND** one Diesel driven pump	1. Assess the impact on the operating unit.	Loss of 1 or more - WHITE
Spent Fuel Cooling (N/A if the reactor core is fully loaded)	SFP Cooling Pump A and B	1. Take immediate action to repair the failed pump, or switch to the other pump. 2. Establish Emergency SFP Cooling Pump operation per 3/4-ONOP-033.1, Spent Fuel Pit (SFP) Cooling System Malfunction. 3. Notify the Operations, Work Controls, Maintenance, and Plant Managers. 4. Monitor Spent Fuel Pool temperature and level frequently. 5. Suspend any activities that would risk remaining equipment required (ICW, CCW, Electrical, Makeup). 6. Go to 3/4-ONOP-033.1, SPENT FUEL PIT (SFP) COOLING SYSTEM MALFUNCTION.	1- YELLOW *0 - ORANGE
	Spent Fuel Pit Exhaust Fan	1. Initiate action to restore exhaust fan to service. 2. Notify the Operations, Work Controls, Maintenance, and Plant Managers. 3. Suspend any activities that would risk Spent Fuel Pool Cooling capabilities.	0 - WHITE
	C 480 Volt Load Center	1. Initiate action to restore power to C load center. 2. Notify Operations, Maintenance, Work Controls, and Plant Managers. 3. Verify the ability to power the Emergency SFP Cooling Pump IAW 3/4-OP-033, Spent Fuel Pit Cooling System. 4. Monitor SFP temperature and level frequently. 5. Go to 3/4-ONOP-033.1, SPENT FUEL PIT (SFP) COOLING SYSTEM MALFUNCTION.	De-energized - YELLOW* De-energized ORANGE**
SFP Water Makeup Sources (N/A if the reactor core is fully loaded)	2 of following water sources: - RWST and RWST purification pump - PWT and PW pump - CVS Holdup Tank and Recirc Pump	1. Initiate actions to restore SFP makeup source in accordance with 3/4-OP-033. 2. Consider Fire Protection System and dual hose station. 3. Notify Operations, Maintenance, Work Controls and Plant Managers. 4. Monitor SFP level and temperature frequently. 5. Suspend all activities that would risk spent fuel cooling capabilities.	1 – YELLOW 0 – ORANGE

* With Alt SFP cooling system available.
** With Alt SFP cooling system unavailable.

ENCLOSURE 4
(Page 1 of 8)

MINIMUM REQUIRED EQUIPMENT, PHASE II, REDUCED DECAY HEAT LOAD AND REACTOR CAVITY FLOODED GREATER THAN 23 FEET ABOVE THE VESSEL FLANGE

Function	Required Equipment	Contingency Action	Color Code
Decay Heat Removal	Two RHR Pumps	1. Take immediate action to repair the failed pump. 2. Go to 3/4-ONOP-050, LOSS OF RHR, for loss of RHR. 3. Maintain Reactor Cavity level greater than 23 feet above the vessel flange. 4. Maintain RCS temperature as low as possible. 5. Suspend any activities that would risk the remaining RHR, ICW, or CCW Pumps; EDG; and 4KV Bus. 6. Upon loss of both pumps, initiate actions to establish Containment Closure except for the equipment hatch. 7. Verify that the equipment hatch can be closed within the time frame specified in Enclosure 13. Station the necessary personnel at the hatch with direct communications to the RO.	1 – YELLOW 0 - RED
	Two RHR Heat Exchangers	1. Take action as described for RHR Pumps.	1 – YELLOW 0 - RED
	Two CCW Pumps	1. Go to 3/4-ONOP-030, COMPONENT COOLING WATER MALFUNCTION, for loss of CCW. 2. Carry out other actions per RHR pumps above.	1 – YELLOW 0 - RED

ENCLOSURE 4
(Page 2 of 8)

MINIMUM REQUIRED EQUIPMENT, PHASE II, REDUCED DECAY HEAT LOAD AND REACTOR CAVITY FLOODED GREATER THAN 23 FEET ABOVE THE VESSEL FLANGE

Function	Required Equipment	Contingency Action	Color Code
Decay Heat Removal (Cont'd)	Two CCW Heat Exchangers	1. Go to 3/4-ONOP-030, COMPONENT COOLING WATER MALFUNCTION, for loss of CCW. 2. Take action to restore the unavailable component to service. 3. Take other actions as described for RHR Pumps. 4. With only one CCW Heat Exchanger available, suspend activities that would risk the remaining heat exchanger.	1 – ORANGE 0 - RED
	Two ICW Pumps	1. Go to 3/4-ONOP-019, INTAKE COOLING WATER MALFUNCTION, for loss of ICW. 2. Suspend activities that may risk the remaining ICW Pumps. 3. CCW cross-tie to the other unit may be appropriate. 4. Notify the Work Controls Manager, Operations Manager, Maintenance Manager, and Plant Manager.	1 – YELLOW 0 - RED
	One ICW Header	1. Verify that at least two ICW pumps **AND** two CCW heat exchangers are aligned to the remaining ICW header. 2. Prior to removing an ICW header from service, verify that the basket strainer associated with the remaining header is clean. 3. Have a contingency plan, with responsible individuals designated, in place to restore the header to service.	0 - RED

ENCLOSURE 4
(Page 3 of 8)

MINIMUM REQUIRED EQUIPMENT, PHASE II, REDUCED DECAY HEAT LOAD AND REACTOR CAVITY FLOODED GREATER THAN 23 FEET ABOVE THE VESSEL FLANGE

Function	Required Equipment	Contingency Action	Color Code
Inventory Control	One Charging Pump (one with an available EDG power source)	1. Initiate action to repair the unavailable charging pump. 2. Notify the Operations, Work Controls, Maintenance and Plant Managers. 3. Verify the availability of one HHSI Pump with suction aligned to an RWST with at least 20,000 gallons of water **AND** an available flowpath to the RCS. 4. Do not reduce RCS inventory; if possible, take action to maximize RCS inventory. 5. Maintain RCS temperature as low as possible.	0 – ORANGE
	Flowpath from the charging pump to the RCS (Regen Hx or RCP seals) and suction capability from the BAST or RWST	1. Initiate action to repair the unavailable components. 2. Notify the Operations, Work Controls, Maintenance, and Plant Managers. 3. Verify the availability of one HHSI Pump with suction aligned to an RWST with at least 20,000 gallons of water **AND** an available flowpath to the RCS.	0 – ORANGE 0 – RED if no HHSI flowpath
	One of four Primary Water Pumps	1. Initiate action to repair the unavailable component. 2. Notify Operations, Work Controls, Maintenance, and Plant Managers. 3. Verify capability to cross connect Primary Water from opposite unit. 4. Verify the availability of the charging pump suction from the RWST.	0 - YELLOW
	One of four Boric Acid Pumps	1. Initiate action to repair the unavailable components. 2. Notify Operations, Work Controls, Maintenance, and Plant Managers. 3. Verify the availability of the charging pump suction from the RWST. 4. Verify the availability of one HHSI pump with suction aligned to an RWST with at least 20,000 gallons of water **AND** an available flowpath to the RCS.	0 - ORANGE

ENCLOSURE 4
(Page 4 of 8)

MINIMUM REQUIRED EQUIPMENT, PHASE II, REDUCED DECAY HEAT LOAD AND REACTOR CAVITY FLOODED GREATER THAN 23 FEET ABOVE THE VESSEL FLANGE

Function	Required Equipment	Contingency Action	Color Code
Inventory Control (Cont'd)	One of four HHSI Pumps each with an emergency power supply and suction capability from an RWST with at least 20,000 gallons of water **AND** an available flowpath to the RCS.	1. Initiate action to restore the unavailable components. 2. Verify the availability of at least one charging pump. 3. Maximize RCS inventory. 4. Maintain RCS temperature as low as possible. 5. Notify the Operations, Work Controls, Maintenance, and Plant Managers.	0 – YELLOW
On-site and Off-site Power	Two of the below listed Transformers capable of powering the A **OR** B 4KV Bus * • Startup • AUX on backfeed • Opposite unit startup transformer to A Bus • One C Bus transformer to A **OR** B Bus	1. Go to 3/4-ONOP-004, LOSS OF OFF-SITE POWER, for loss of off-site power. 2. Go to 3/4-ONOP-092.3, STARTUP TRANSFORMER MALFUNCTION, for S/U transformer malfunction. 3. Initiate actions to return the required transformer to service. 4. Verify the availability of both EDGs. 5. Verify the availability of the station blackout tie. 6. Suspend activities that would risk the remaining power supplies. 7. Verify the availability of one C Bus to power A OR B 4KV Bus. 8. Notify the Operations, Work Controls, Maintenance, and Plant Managers.	1 xfmr with SBO tie - YELLOW 1 xfmr without SBO tie - ORANGE 0 xfrm - RED

* Reference Step 5.1.1.29

ENCLOSURE 4
(Page 5 of 8)

MINIMUM REQUIRED EQUIPMENT, PHASE II, REDUCED DECAY HEAT LOAD AND REACTOR CAVITY FLOODED GREATER THAN 23 FEET ABOVE THE VESSEL FLANGE

Function	Required Equipment	Contingency Action	Color Code
On-site and Off-site Power (Cont'd)	A, B **AND** D 4KV Busses	1. Except during refueling outage, scheduled bus outages (one bus at a time), take action to restore the out-of-service components. Go to appropriate procedure below: 3/4-ONOP-004.2, LOSS OF A 4KV BUS 3/4-ONOP-004.3, LOSS OF B 4KV BUS 3/4-ONOP-004.5, LOSS OF D 4KV BUS 2. Verify at least two on-site sources of AC power are available. 3. For loss of Off-site power go to 3/4-ONOP-004, LOSS OF OFF-SITE POWER. 4. With A, B, **OR** D 4KV Busses unavailable, verify the ability to power A or B Bus from one C Bus transformer. 5. With D 4KV Bus unavailable, maintain both associated unit EDGs available.	2 – YELLOW Loss of D Bus and A or B Busses - ORANGE Loss of A and B Busses - RED
	One Emergency Diesel Generator on the Associated Unit	1. Take action to restore the unavailable EDG to service. 2. Suspend activities that may risk the Off-site power sources. 3. Verify availability of the station blackout tie. 4. Verify the ability to power A **OR** B Bus from one C Bus transformer.	0 - ORANGE
	Station Blackout Tie	1. Verify availability of both associated unit EDGs. 2. Suspend activities that may risk the Off-site power supplies. 3. Verify the ability to power A **OR** B Bus from one C Bus transformer.	0 w/ C bus tie – YELLOW 0 w/o C bus tie - ORANGE

ENCLOSURE 4
(Page 6 of 8)

MINIMUM REQUIRED EQUIPMENT, PHASE II, REDUCED DECAY HEAT LOAD AND REACTOR CAVITY FLOODED GREATER THAN 23 FEET ABOVE THE VESSEL FLANGE

Function	Required Equipment	Contingency Action	Color Code
Reactivity Control	C_B > Required Refueling C_B	1. Take action to increase boron concentration (C_B) to > Required Refueling C_B. 2. Suspend core alterations until C_B > Required Refueling C_B. 3. Verify NO primary water additions to the refueling cavity in progress.	RED if C_B < Required Refueling C_B
Shutdown Monitoring Instrumentation	Two of four Source Range Instruments 1 w/ Audible Count Rate	1. Take action to restore the failed components. 2. Suspend activities that could reduce the available Shutdown Margin. 3. Notify the Operations, Work Controls, Maintenance, and Plant Managers.	1/4 - WHITE 0/4 – YELLOW Audible CR may be inoperable if no fuel movement.
	ARMS Channels: Three Inside Containment One Spent Fuel Pool #	1. Take action to restore the failed components. 2. Install temporary monitoring equipment in the affected area. 3. Suspend activities that may increase radiation levels in the affected area.	Loss of 1 or more - WHITE
	PRMS Channels: R-11, R-12, R-14	1. Take action to secure releases via the unmonitored pathway **OR** take action to continue releases as allowed by Technical Specifications. 2. Consider installation of temporary monitoring equipment.	Loss of 1 or more - WHITE
	One Channel of Containment Water Level Indication	1. Take action to restore one channel to service as soon as possible.	0 – WHITE
	Two Channels of Containment Sump Level Indication	1. Restore two channels to service as soon as possible. 2. Suspend activities that may result in increased sump level. 3. Verify that any temporary drain hoses are not resulting in loss of RCS inventory at least once per shift.	1 – WHITE 0 - YELLOW

In containment, one at a time may be OOS for calibration.

ENCLOSURE 4
(Page 7 of 8)

MINIMUM REQUIRED EQUIPMENT, PHASE II, REDUCED DECAY HEAT LOAD AND REACTOR CAVITY FLOODED GREATER THAN 23 FEET ABOVE THE VESSEL FLANGE

Function / Support Equipment	Required Equipment	Contingency Action	Color Code
Containment Closure	Equipment Hatch (capable of being closed with four bolts in accordance with Enclosure 13) *	1. Suspend activities that risk required Decay Heat Removal Equipment. 2. Initiate action to restore the capability to close the hatch in the required time frame. 3. Notify the Maintenance, Operations, Work Controls, and Plant Managers.	Required Time Met - GREEN Required Time Not Met, Core Alts NOT in Progress (TCN Required) - YELLOW Required Time Not Met, During Core Alts - ORANGE
	Personnel Hatch (capable of being closed in accordance with Enclosure 13) *	1. Suspend activities that risk required Decay Heat Removal Equipment. 2. Initiate action to restore the capability to close the hatch in the required time frame. 3. Notify the Maintenance, Operations, Work Controls, and Plant Managers.	
	Containment Penetrations (At least one valve in each penetration that is **NOT** pressurized should be kept closed or capable of being closed in accordance with Enclosure 13.) Exceptions may be taken under administrative controls for testing, surveillance, and maintenance.	1. If an exception is taken, and at least one valve in the penetration is capable of closure, either manually from the Control Room or locally, the penetration shall be logged on Attachment 3. The log entry shall identify the actions necessary to close the penetration. 2. If an exception is taken, and the penetration is **NOT** capable of being closed by at least one valve, a **TCN** with a contingency plan to achieve closure is required **PRIOR** to authorizing work on the penetration. 3. Initiate action to restore closure capability. 4. Suspend activities that would risk required Decay Heat Removal Equipment. 5. Notify the Maintenance, Operations, Work Controls, and Plant Managers.	
Risk Significant Equipment	One Auxiliary Building Exhaust Fan	1. **IF** out-of-service time is to exceed 119 hours, **THEN** notify the Work Controls Manager and Plant Manager. 2. Assess the impact on the operating unit. 3. Assess the impact on the running RHR pump.	0 - YELLOW

* Capability includes provisions for unavailability of AC power and environmental conditions expected.

ENCLOSURE 4
(Page 8 of 8)

MINIMUM REQUIRED EQUIPMENT, PHASE II, REDUCED DECAY HEAT LOAD AND REACTOR CAVITY FLOODED GREATER THAN 23 FEET ABOVE THE VESSEL FLANGE

System / Support Equipment	Required Equipment	Contingency Action	Color Code
Risk Significant Equipment (Cont'd)	One Diesel Driven Instrument Air Compressor **AND** the Instrument Air Cross Tie Lines	1. Verify the availability of a portable Instrument Air Compressor. 2. Verify the availability of the Instrument Air Cross Tie. 3. **IF** out-of-service time is to exceed 548 hours, **THEN** notify the Work Controls Manager and Plant Manager. 4. Assess the impact on the operating unit.	0 – YELLOW
	Vital DC Room HVAC - Two of three units required E16D E16E E16F	1. Monitor temperature in the Inverter and DC Equipment Rooms. 2. Install portable fans or verify availability of portable fans. 3. Assess the impact on the operating unit.	1 – WHITE 0 - YELLOW
	Service Water Pumps - One Electric pump **AND** one Diesel driven pump	1. Assess the impact on the operating unit.	Loss of 1 or more - WHITE
Spent Fuel Cooling (N/A if the reactor core is fully loaded)	SFP Cooling Pump A and B	1. Take immediate action to repair the failed pump or switch to other pump. 2. Establish Emergency SFP Cooling Pump operation per 3/4-O-NOP-033.1, Spent Fuel Pit (SFP) Cooling System Malfunction. 3. Notify the Operations, Work Controls, Maintenance, and Plant Managers. 4. Monitor Spent Fuel Pool temperature and level frequently. 5. Suspend any activities that would risk remaining equipment required (ICW, CCW, Electrical, Makeup). 6. Go to 3/4-ONOP-033.1, SPENT FUEL PIT (SFP) COOLING SYSTEM MALFUNCTION.	1 - YELLOW 0 - ORANGE
	Spent Fuel Pit Exhaust Fan	1. Initiate action to restore exhaust fan to service. 2. Notify the Operations, Work Controls, Maintenance, and Plant Managers. 3. Suspend any activities that would risk Spent Fuel Pool Cooling capabilities.	0 - WHITE
	C 480 Volt Load Center	1. Initiate action to restore power to C load center. 2. Notify Operations, Maintenance, Work Controls, and Plant Managers. 3. Verify the ability to power the Emergency SFP Cooling Pump IAW 3/4-OP-033, Spent Fuel Pit Cooling System. 4. Monitor SFP temperature and level frequently. 5. Go to 3/4-ONOP-033.1, SPENT FUEL PIT (SFP) COOLING SYSTEM MALFUNCTION.	De-energized - YELLOW * De-energized – ORANGE**
SFP Water Makeup Sources (N/A if the reactor core is fully loaded)	2 of following water sources: - RWST and RWST purification pump - PWT and PW pump - CVS Holdup Tank and Recirc Pump	1. Initiate actions to restore SFP makeup source in accordance with 3/4–OP-033. 2. Consider Fire Protection System and dual hose station. 3. Notify Operations, Maintenance, Work Controls and Plant Managers. 4. Monitor SFP level and temperature frequently. 5. Suspend all activities that would risk spent fuel cooling capabilities.	1 or less – YELLOW

* With Alt SFP cooling system available.

** With Alt SFP cooling system unavailable.

ENCLOSURE 5
(Page 1 of 9)

MINIMUM REQUIRED EQUIPMENT, PHASE II, REDUCED DECAY HEAT LOAD AND RCS TEMP LESS THAN 200 DEGREES WITHOUT RCS LOOPS AVAILABLE

Function	Required Equipment	Contingency Action	Color Code
Decay Heat Removal	Two RHR Pumps	1. Take immediate action to repair the failed pump. 2. Go to 3/4-ONOP-050, LOSS OF RHR, for loss of RHR. 3. Establish or maintain Reactor Vessel level higher than three feet below the vessel flange. Maximize RCS inventory as much as is achievable. 4. Maintain RCS temperature as low as possible. 5. Ensure Feed and Bleed decay heat removal capability, using the HHSI pumps, is available. 6. Suspend any activities that would risk the remaining RHR, ICW, or CCW Pumps; EDG; **AND** 4KV Bus. 7. Upon loss of both pumps, initiate actions to establish Containment Closure, except for the equipment hatch. 8. Verify that the equipment hatch can be closed within the time frame to heat up to Mode 4 following a loss of shutdown cooling as predicted using the time to saturation of Figure 2. Station the necessary personnel at the hatch with direct communications to the RO. 9. Investigate the possibility of flooding the Reactor Cavity to a height of 23 feet above the Reactor Vessel Flange. 10. If RCS inventory is at Mid-Loop, then refer to Figure 5, Time to Core Uncovery from Mid-Loop.	1 – ORANGE 0 - RED
	Two RHR Heat Exchangers	1. Take action as described for RHR Pumps.	1 – ORANGE 0 - RED
	Two CCW Pumps*	1. Go to 3/4-ONOP-030, COMPONENT COOLING WATER MALFUNCTION, for loss of CCW. 2. Carry out other actions as described per RHR pumps above.	1 – ORANGE 0 - RED

* Powered from independent power sources if RCS level lower than 3 feet below the vessel flange. [Commitment Step – 2.3.1]

ENCLOSURE 5
(Page 2 of 9)

MINIMUM REQUIRED EQUIPMENT, PHASE II, REDUCED DECAY HEAT LOAD AND RCS TEMP LESS THAN 200 DEGREES WITHOUT RCS LOOPS AVAILABLE

Function	Required Equipment	Contingency Action	Color Code
Decay Heat Removal (Cont'd)	Two CCW Heat Exchangers	1. Go to 3/4-ONOP-030, COMPONENT COOLING WATER MALFUNCTION, for loss of CCW. 2. Take action to restore the unavailable component to service. 3. With only one CCW heat exchanger available, suspend operations that would risk the remaining heat exchanger. 4. Take other actions as described for RHR Pumps.	1 – ORANGE 0 - RED
	Two ICW Pumps*	1. Go to 3/4-ONOP-019, INTAKE COOLING WATER MALFUNCTION, for loss of ICW. 2. Suspend activities that may risk the remaining ICW Pumps. 3. CCW cross-tie to the other unit may be appropriate. 4. Notify the Work Controls Manager, Operations Manager, Maintenance Manager, and Plant Manager.	1 – ORANGE 0 - RED
	Two ICW Headers	1. Verify that at least two ICW pumps **AND** two CCW heat exchangers are aligned to the remaining ICW header. 2. Prior to removing an ICW header from service, verify that the basket strainer associated with the remaining header is clean. 3. Have a contingency plan, with responsible individuals designated, in place to restore the header to service.	1 – YELLOW 0 - RED

* Powered from independent power sources if RCS level lower than 3 feet below the vessel flange. [Commitment Step – 2.3.1]

ENCLOSURE 5
(Page 3 of 9)

MINIMUM REQUIRED EQUIPMENT, PHASE II, REDUCED DECAY HEAT LOAD AND RCS TEMP LESS THAN 200 DEGREES WITHOUT RCS LOOPS AVAILABLE

Function	Required Equipment	Contingency Action	Color Code
Inventory Control	Two Charging Pumps (One with an available EDG power source. Both with an available EDG to meet the requirement below #)	1. Initiate action to repair the unavailable charging pump. 2. Notify the Operations, Work Controls, Maintenance and Plant Managers. 3. Verify the availability of two HHSI Pumps with suction aligned to an RWST with at least 20,000 gallons of water **AND** an available flowpath to the RCS. 4. Do not reduce RCS inventory; if possible, take action to maximize RCS inventory. 5. Maintain RCS temperature as low as possible. 6. Suspend activities that would place any remaining charging pump and its power supply at risk.	1 – ORANGE 0 - RED
	Flowpath from the charging pump to the RCS (Regen Hx or RCP seals) and suction capability from the BAST or RWST	1. Initiate action to repair the unavailable components. 2. Notify the Operations, Work Controls, Maintenance, and Plant Managers. 3. Verify the availability of two HHSI Pumps with suction aligned to an RWST with at least 20,000 gallons of water **AND** available flowpath to the RCS.	0 - ORANGE 0 – RED if no HHSI Flowpath
	One of four Primary Water Pumps	1. Initiate action to repair the unavailable components. 2. Notify Operations, Work Controls, Maintenance, and Plant Managers. 3. Verify capability to cross connect Primary Water from the opposite unit. 4. Verify the availability of the charging pump suction from the RWST.	0 – YELLOW
	Two of four Boric Acid Pumps	1. Initiate action to repair the unavailable components. 2. Notify Operations, Work Controls, Maintenance, and Plant Managers. 3. Verify the availability of the charging pump suction from the RWST. 4. Verify the availability of two HHSI pumps with suction aligned to an RWST with at least 20,000 gallons of water **AND** an available flowpath to the RCS.	1 – YELLOW 0 – ORANGE

Two charging pumps required with available EDG power source if RCS level is lower than 3 feet below the vessel flange.

[Commitment Step 2.3.1]

ENCLOSURE 5
(Page 4 of 9)

MINIMUM REQUIRED EQUIPMENT, PHASE II, REDUCED DECAY HEAT LOAD AND RCS TEMP LESS THAN 200 DEGREES WITHOUT RCS LOOPS AVAILABLE

Function	Required Equipment	Contingency Action	Color Code
Inventory Control (Cont'd)	Two of four HHSI Pumps each with an emergency power supply and suction capability from an RWST with at least 20,000 gallons of water **AND** an available flowpath to the RCS.*	1. Initiate action to restore the unavailable components. 2. Verify the availability of at least two charging pumps. 3. Maximize RCS inventory. 4. Maintain RCS temperature as low as possible. 5. Notify the Operations, Work Controls, Maintenance, and Plant Managers.	1 – YELLOW 0 - ORANGE
	RCS Inventory at or above 5% in pressurizer. (Color Code Determination Only)	N/A	YELLOW drained to higher than 3' below flange ORANGE Drained to hot leg mid nozzle
On-site and Off-site Power	Two of the below listed Transformers capable of powering A **OR** B 4KV Bus • Startup • AUX on backfeed • Opposite unit startup transformer to **A** Bus • Either unit's **C** Bus transformer to **A** or **B** Bus	1. Go to 3/4-ONOP-004, LOSS OF OFF-SITE POWER, for loss of off-site power. 2. Go to 3/4-ONOP-092.3, STARTUP TRANSFORMER MALFUNCTION, for S/U transformer malfunction. 3. Initiate actions to return the required transformer to service. 4. Verify the availability of both EDGs. 5. Verify the availability of the station blackout tie. 6. Suspend activities that would risk the remaining power supplies. 7. Verify the availability of one C Bus to power A **OR** B 4KV Bus. 8. Notify the Operations, Work Controls, Maintenance, and Plant Managers.	1 trf – ORANGE 0 - RED

* Both hot and cold leg injection paths are required if RCS level is lower than 3 feet below the vessel flange.
[Commitment Step – 2.3.1]

ENCLOSURE 5
(Page 5 of 9)

MINIMUM REQUIRED EQUIPMENT, PHASE II, REDUCED DECAY HEAT LOAD AND RCS TEMP LESS THAN 200 DEGREES WITHOUT RCS LOOPS AVAILABLE

Function	Required Equipment	Contingency Action	Color Code
On-site and Off-site Power (Cont'd)	A, B **AND** D 4KV Busses	1. Take action to restore the out-of-service components. Go to appropriate procedure below: 3/4-ONOP-004.2, LOSS OF A 4KV BUS 3/4-ONOP-004.3, LOSS OF B 4KV BUS 3/4-ONOP-004.5, LOSS OF D 4KV BUS 2. Verify at least two on-site sources of AC power are available. 3. For loss of Off-site power go to 3/4-ONOP-004, LOSS OF OFF-SITE POWER. 4. With A, B **OR** D 4KV Busses unavailable, verify the ability to power A **OR** B Bus from one C Bus transformer. 5. With D 4KV Bus unavailable, maintain both associated unit EDGs available.	Loss of D Bus - YELLOW Loss of A or B Bus – ORANGE 1 - RED
	One Emergency Diesel Generator on the Associated Unit*	1. Take action to restore the unavailable EDG to service. 2. Suspend activities that may risk the Off-site power sources. 3. Verify availability of the station blackout tie. 4. Verify the ability to power A **OR** B from one C Bus transformer.	0 - ORANGE
	Station Blackout Tie	1. Verify availability of both associated unit EDGs. 2. Suspend activities that may risk the Off-site power supplies. 3. Verify the ability to power A **OR** B from one C Bus transformer.	0 w/ C bus tie – YELLOW 0 w/o C bus tie - ORANGE

* Two EDGs required if RCS level lower than 3 feet below the vessel flange. [Commitment Step – 2.3.1]

ENCLOSURE 5
(Page 6 of 9)

MINIMUM REQUIRED EQUIPMENT, PHASE II, REDUCED DECAY HEAT LOAD AND RCS TEMP LESS THAN 200 DEGREES WITHOUT RCS LOOPS AVAILABLE

Function	Required Equipment	Contingency Action	Color Code
Reactivity Control	C_B > 0-OP-028.2 SDM Calculation for Mode 5, or > Required Refueling C_B for Mode 6	1. Take action to restore boron concentration (C_B) to > 0-OP-028.2 SDM Calculation, or > Required Refueling C_B as applicable. 2. Verify NO primary water additions in progress.	RED if C_B < the required conc
Shutdown Monitoring Instrumentation	Two of Four Source Range Instruments (1 w/ Audible Count Rate in Mode 6)	1. Take action to restore the failed components. 2. Suspend activities that could reduce the available Shutdown Margin. 3. Notify the Operations, Work Controls, Maintenance, and Plant Managers.	1/4 - WHITE 0/4 - YELLOW
	ARMS Channels: Three Inside Containment One Spent Fuel Pool #	1. Take action to restore the failed components. 2. Install temporary monitoring equipment in the affected area. 3. Suspend activities that may increase radiation levels in the affected area.	Loss of 1 or more - WHITE
	PRMS Channels: R-11, R-12, R-14	1. Take action to secure releases via the unmonitored pathway **OR** take action to continue releases as allowed by Technical Specifications. 2. Consider installation of temporary monitoring equipment.	Loss of 1 or more - WHITE
	2 Core Exit Thermocouples (Required when the reactor vessel head is fully tensioned.)*	1. Arrange with I&C for alternate readouts or monitoring of CETs if possible. 2. Verify that two channels of wide range T_{HOT} are available. 3. Maintain RCS greater than 10 percent Wide Range Pressurizer Level.	0 – YELLOW
	One Channel of Reactor Vessel Level HJTC (QSPDS) (Required when the reactor vessel head is fully tensioned.)	1. Take action to restore at least one channel as soon as possible. 2. Maximize RCS inventory as much as is allowed by plant conditions. 3. Maintain RCS greater than 10 percent Wide Range Pressurizer Level. 4. If OOS as part of reactor disassembly, verify two channels of the reactor vessel draindown level indication available, one with control room readout. **IF** <2 channels available, maintain RCS level higher than 3 feet below the vessel flange.	0 – WHITE

* A minimum of two (2) CETs are required whenever RCS level is lower than 3 feet below the vessel flange. [Commitment Step – 2.3.1]

\# One at a time may be OOS for calibration.

ENCLOSURE 5
(Page 7 of 9)

MINIMUM REQUIRED EQUIPMENT, PHASE II, REDUCED DECAY HEAT LOAD AND RCS TEMP LESS THAN 200 DEGREES WITHOUT RCS LOOPS AVAILABLE

Function	Required Equipment	Contingency Action	Color Code
Shutdown Monitoring Instrumentation (Cont'd)	One Channel of Containment Water Level Indication	1. Take action to restore one channel to service as soon as possible.	0 - WHITE
	Two Channels of Containment Sump Level Indication	1. Restore two channels to service as soon as possible. 2. Suspend activities that may result in increased sump level. 3. Verify that any temporary drain hoses are not resulting in loss of RCS inventory at least once per shift.	1 – WHITE 0 - YELLOW
	One Pressurizer Cold Calibrated Level Indication **	1. Suspend activities which may result in RCS inventory loss. 2. Monitor temporary drain hoses for loss of RCS inventory at least once per shift. 3. Consider installation of a temporary level hose as appropriate for plant conditions.	0 - WHITE
	RCS Pressure Instruments PT-402, PT-403, and PT-405	1. Verify sufficient OMS trains are still available. 2. Notify the Operations, Work Controls, Maintenance, and Plant Managers.	0 – WHITE
	RCS Wide Range T_{HOT} and T_{COLD}: At least one channel per loop	1. Verify the availability of two CETs. 2. Verify that OMS controls are not affected by the unavailable channel.	None –WHITE
	Reactor Vessel Draindown Level Indication: Two of three channels available, (includes level hose) one with Control Room indication*#	1. Maintain RCS level higher than 3 feet below the vessel flange. 2. Do not reduce RCS inventory until two channels are available. 3. Investigate the possibility of verifying Reactor Vessel Level via some other means, (i.e., level hose or QSPDS).	1 available – YELLOW 0 – ORANGE requires Control Room Indication

* The level hose **AND** both draindown level indicators are required for RCS level lower than 3 feet below the vessel flange. [Commitment Step – 2.3.1]

** **IF** RCS level is on scale in reactor vessel draindown instruments, **THEN** pressurizer cold calibrated level instrument is not required.

\# **IF** pressurizer cold calibrated level indication is greater than 10%, **THEN** reactor vessel draindown level indication is not required.

ENCLOSURE 5
(Page 8 of 9)

MINIMUM REQUIRED EQUIPMENT, PHASE II, REDUCED DECAY HEAT LOAD AND RCS TEMP LESS THAN 200 DEGREES WITHOUT RCS LOOPS AVAILABLE

Function / Support Equipment	Required Equipment	Contingency Action	Color Code
Containment closure	Equipment Hatch (capable of being closed with four bolts in accordance with Enclosure 13)* +	1. Suspend activities that risk required Decay Heat Removal Equipment. 2. Initiate action to restore the capability to close the hatch in the required time frame. 3. Notify the Maintenance, Operations, Work Controls, and Plant Managers.	Required Time Met - GREEN Required Time Not Met (TCN Required) - YELLOW Required Time Not Met During Reduced Inventory - ORANGE
	Personnel Hatch (capable of being closed in accordance with Enclosure 13)* +	1. Suspend activities that risk required Decay Heat Removal Equipment. 2. Initiate action to restore the capability to close the hatch in the required time frame. 3. Notify the Maintenance, Operations, Work Controls, and Plant Managers.	
	Containment Penetrations (At least one valve in each penetration that is **NOT** pressurized should be kept closed or capable of being closed in accordance with Enclosure 13) # Exceptions may be taken under administrative controls for testing, surveillance, and maintenance.	1. If an exception is taken, and at least one valve in the penetration is capable of closure, either manually from the Control Room or locally, the penetration shall be logged on Attachment 3. The log entry shall identify the actions necessary to close the penetration. 2. If an exception is taken, and the penetration is **NOT** capable of being closed by at least one valve, a **TCN** with a contingency plan to achieve closure is required **PRIOR** to authorizing work on the penetration. 3. If an exception is taken while RCS level is lower than 3' below the vessel flange, and the penetration is NOT capable of being closed by at least one valve, a TCN with a contingency plan to achieve closure and meet 20 psi containment pressure is required PRIOR to authorizing work on the penetration. 4. Initiate action to restore closure capability. 5. Suspend activities that would risk required Decay Heat Removal Equipment. 6. Notify the Maintenance, Operations, Work Controls, and Plant Managers.	
Risk Significant Equipment	One Auxiliary Building Exhaust Fan	1. **IF** out-of-service time is to exceed 119 hours, **THEN** notify the Work Controls Manager and Plant Manager. 2. Assess the impact on the operating unit. 3. Assess the impact on the running RHR pump.	0 – YELLOW

* If RCS level lower than 3 feet below the vessel flange prior to fuel offload, control in accordance with 3/4-OP-041.9, until RCS level returns above 3 feet below the vessel flange. [Commitment Step – 2.3.1]

\# See Substep 5.1.1.22.c for requirements if RCS level lower than 3 feet below the vessel flange. [Commitment Step – 2.3.1]

\+ Capability includes provisions for unavailability of AC power and environmental conditions expected.

ENCLOSURE 5
(Page 9 of 9)

MINIMUM REQUIRED EQUIPMENT, PHASE II, REDUCED DECAY HEAT LOAD AND RCS TEMP LESS THAN 200 DEGREES WITHOUT RCS LOOPS AVAILABLE

Support Equipment	Required Equipment	Contingency Action	Color Code
Risk Significant Equipment (Cont'd)	One Diesel Driven Instrument Air Compressors and the Instrument Air Cross Tie Lines	1. Verify the availability of a portable Instrument Air Compressor. 2. Verify the availability of the Instrument Air Cross Tie. 3. If out-of-service time is to exceed 548 hours, notify the Work Controls Manager and Plant Manager. 4. Assess the impact on the operating unit.	0 – YELLOW
	Vital DC Room HVAC - Two of three units required E16D E16E E16F	1. Monitor temperature in the Inverter and DC Equipment Rooms. 2. Install portable fans or verify availability of portable fans. 3. Assess the impact on the operating unit.	1 – WHITE 0 - YELLOW
	Service Water Pumps - One Electric pump **AND** one Diesel driven pump	1. Assess the impact on the operating unit.	Loss of 1 or more - WHITE

ENCLOSURE 6
(Page 1 of 9)

MINIMUM REQUIRED EQUIPMENT, PHASE II, REDUCED DECAY HEAT LOAD AND RCS TEMP LESS THAN 200 DEGREES WITH RCS LOOPS FILLED

Function	Required Equipment	Contingency Action	Color Code
Decay Heat Removal	Two RHR Pumps	1. Take immediate action to repair the failed pump. 2. Go to 3/4-ONOP-050, LOSS OF RHR, for loss of RHR. 3. Maximize RCS inventory as much as is achievable. 4. Maintain RCS pressurized to 100 psig to meet loops filled criteria. 5. Maintain RCS temperature as low as possible. 6. Ensure Feed and Bleed decay heat removal capability, using the HHSI pumps, is available. 7. Maintain Decay Heat Removal capability with at least two Steam Generators, including a source of feedwater. 8. Suspend any activities that would risk the remaining RHR, ICW, or CCW Pumps; EDG; **AND** 4KV Bus. 9. Upon loss of both pumps, initiate actions to establish Containment Closure except for the equipment hatch. 10. Verify that the equipment hatch can be closed within the time frame to heat up to Mode 4 following a loss of shutdown cooling as predicted using the heatup rates of Figure 1. Station the necessary personnel at the hatch with direct communications to the RO.	1 – YELLOW 0 – RED
	Two RHR Heat Exchangers	1. Take action as described for RHR Pumps.	1 – ORANGE 0 - RED
	Two CCW Pumps	1. Go to 3/4-ONOP-030, COMPONENT COOLING WATER MALFUNCTION, for loss of CCW. 2. Carry out other actions as described per RHR pumps above.	1 – ORANGE 0 - RED

ENCLOSURE 6
(Page 2 of 9)

MINIMUM REQUIRED EQUIPMENT, PHASE II, REDUCED DECAY HEAT LOAD AND RCS TEMP LESS THAN 200 DEGREES WITH RCS LOOPS FILLED

Function	Required Equipment	Contingency Action	Color Code
Decay Heat Removal (Cont'd)	Two CCW Heat Exchangers	1. Go to 3/4-ONOP-030, COMPONENT COOLING WATER MALFUNCTION, for loss of CCW. 2. Take action to restore the unavailable component to service. 3. Take other actions as described for RHR Pumps.	1 – ORANGE 0 - RED
	Two ICW Pumps	1. Go to 3/4-ONOP-019, INTAKE COOLING WATER MALFUNCTION, for loss of ICW. 2. Suspend activities that may risk the remaining ICW Pumps. 3. CCW cross-tie to the other unit may be appropriate. 4. Notify the Work Controls Manager, Operations Manager, Maintenance Manager, and Plant Manager.	1 – ORANGE 0 - RED
	Two ICW Headers	1. Verify at least two ICW pumps **AND** two CCW heat exchangers are aligned to the remaining ICW header. 2. Prior to removing an ICW header from service, verify that the basket strainer associated with the remaining header is clean. 3. Have a contingency plan, with responsible individuals designated, in place to restore the header to service.	1 – YELLOW 0 - RED
	Source of feedwater and a flowpath from one of the following: SGFP SSGFP Condensate PP Condensate Transfer PP SGWL PP	1. Take action to restore the unavailable component. 2. Restrict Activities that could potentially threaten RHR	0 - YELLOW
	2 Steam Dump to Atmosphere Valves	1. Take action to restore the unavailable component. 2. Restrict Activities that could potentially threaten RHR	0 - YELLOW

ENCLOSURE 6
(Page 3 of 9)

MINIMUM REQUIRED EQUIPMENT, PHASE II, REDUCED DECAY HEAT LOAD AND RCS TEMP LESS THAN 200 DEGREES WITH RCS LOOPS FILLED

Function	Required Equipment	Contingency Action	Color Code
Inventory Control	Two Charging Pumps (one with an available EDG power source)	1. Initiate action to repair the unavailable charging pump. 2. Notify the Operations, Work Controls, Maintenance and Plant Managers. 3. Verify the availability of two HHSI Pumps with suction aligned to an RWST with at least 20,000 gallons of water **AND** an available flowpath to the RCS. 4. Do not reduce RCS inventory; if possible, take action to maximize RCS inventory. 5. Maintain RCS temperature as low as possible. 6. Suspend activities that would place any remaining charging pump and its power supply at risk.	1 – YELLOW 0 - ORANGE
	Flowpath from the charging pump to the RCS (Regen Hx or RCP seals) and suction capability from BAST or RWST	1. Initiate action to repair the unavailable components. 2. Notify the Operations, Work Controls, Maintenance, and Plant Managers. 3. Verify the availability of two HHSI Pumps with suction aligned to an RWST with at least 20,000 gallons of water **AND** an available flowpath to the RCS.	0 – ORANGE
	One of four Primary Water Pumps	1. Initiate action to repair the unavailable components. 2. Notify Operations, Work Controls, Maintenance, and Plant Managers. 3. Verify capability to cross connect Primary Water from the opposite unit. 4. Verify the availability of the charging pump suction from the RWST.	0 – YELLOW
	One of four Boric Acid Pumps	1. Initiate action to repair the unavailable components. 2. Notify Operations, Work Controls, Maintenance, and Plant Managers. 3. Verify the availability of the charging pump suction from the RWST. 4. Verify the availability of two HHSI pumps with suction aligned to an RWST with at least 20,000 gallons of water **AND** an available flowpath to the RCS.	0 - ORANGE

ENCLOSURE 6
(Page 4 of 9)
MINIMUM REQUIRED EQUIPMENT, PHASE II, REDUCED DECAY HEAT LOAD AND RCS TEMP LESS THAN 200 DEGREES WITH RCS LOOPS FILLED

Function	Required Equipment	Contingency Action	Color Code
Inventory Control (Cont'd)	Two of four HHSI Pumps each with an emergency power supply and suction capability from an RWST with at least 20,000 gallons of water **AND** an available flowpath to the RCS.	1. Initiate action to restore the unavailable components. 2. Verify the availability of at least two charging pumps. 3. Maximize RCS inventory. 4. Maintain RCS temperature as low as possible. 5. Notify the Operations, Work Controls, Maintenance, and Plant Managers.	1 – YELLOW 0 - ORANGE
On-site and Off-site Power	Two of the below listed Transformers capable of powering A **OR** B 4KV Bus * • Startup • AUX on backfeed • Opposite unit startup transformer to **A** Bus • Either Unit's C Bus transformer to **A OR B** Bus	1. Go to 3/4-ONOP-004, LOSS OF OFF-SITE POWER, for loss of off-site power. 2. Go to 3/4-ONOP-092.3, STARTUP TRANSFORMER MALFUNCTION, for S/U transformer malfunction. 3. Initiate actions to return the required transformer to service. 4. Verify the availability of both EDGs. 5. Verify the availability of the station blackout tie. 6. Suspend activities that would risk the remaining power supplies. 7. Verify the availability of one C Bus to power A or B 4KV Bus 8. Notify the Operations, Work Controls, Maintenance, and Plant Managers.	1 xfmr with SBO tie - YELLOW 1 xfmr without SBO tie - ORANGE 0 xfrm - RED

* Reference Step 5.1.1.29

ENCLOSURE 6
(Page 5 of 9)

MINIMUM REQUIRED EQUIPMENT, PHASE II, REDUCED DECAY HEAT LOAD AND RCS TEMP LESS THAN 200 DEGREES WITH RCS LOOPS FILLED

Function	Required Equipment	Contingency Action	Color Code
On-site and Off-site Power (Cont'd)	A, B **AND** D 4KV Busses	1. Take action to restore the out-of-service components. Go to appropriate procedure below: 3/4-ONOP-004.2, LOSS OF A 4KV BUS 3/4-ONOP-004.3, LOSS OF B 4KV BUS 3/4-ONOP-004.5, LOSS OF D 4KV BUS 2. Verify at least two on-site sources of AC power are available. 3. For loss of Off-site power go to 3/4-ONOP-004, LOSS OF OFF-SITE POWER. 4. With A, B, **OR** D 4KV Busses unavailable, verify the ability to power A **OR** B Bus from one C Bus transformer. 5. With D 4KV Bus unavailable maintain both associated unit EDGs available.	Loss of D Bus - YELLOW Loss of A or B Bus – ORANGE 1 - RED
	One Emergency Diesel Generator on the Associated Unit	1. Take action to restore the unavailable EDG to service. 2. Suspend activities that may risk the Off-site power sources. 3. Verify availability of the station blackout tie. 4. Verify the ability to power A or B Bus from one C Bus transformer.	0 - ORANGE
	Station Blackout Tie	1. Verify availability of both associated unit EDGs. 2. Suspend activities that may risk the Off-site power supplies. 3. Verify the ability to power A **OR** B Bus from one C Bus transformer.	0 w/ C bus tie – YELLOW 0 w/o C bus tie - ORANGE

ENCLOSURE 6
(Page 6 of 9)

MINIMUM REQUIRED EQUIPMENT, PHASE II, REDUCED DECAY HEAT LOAD AND RCS TEMP LESS THAN 200 DEGREES WITH RCS LOOPS FILLED

Function	Required Equipment	Contingency Action	Color Code
Reactivity Control	C_B > 0-OP-028.2 SDM Calculation	1. Take action to restore boron concentration (C_B) to > 0-OP-028.2 SDM Calculation. 2. Verify NO primary water additions in progress.	RED if C_B < 0-OP-028.2 SDM Calculation
Shutdown Monitoring Instrumentation	Two of Four Source Range Instruments 1 w/ Audible Count Rate	1. Take action to restore the failed components. 2. Suspend activities that could reduce the available Shutdown Margin. 3. Notify the Operations, Work Controls, Maintenance, and Plant Managers.	1/4 - WHITE 0/4 - YELLOW
	ARMS Channels: Three Inside Containment #	1. Take action to restore the failed components. 2. Install temporary monitoring equipment in the affected area. 3. Suspend activities that may increase radiation levels in the affected area.	Loss of 1 or more - WHITE
	PRMS Channels R-11, R-12, R-14, R-19	1. Take action to secure releases via the unmonitored pathway **OR** take action to continue releases as allowed by Technical Specifications. 2. Consider installation of temporary monitoring equipment.	Loss of 1 or more - WHITE
	2 Core Exit Thermocouples	1. Arrange with I&C for alternate readouts or monitoring of CETs if possible. 2. Verify that two channels of wide range T_{HOT} are available. 3. Maintain RCS greater than 10 percent Wide Range Pressurizer Level.	0 –YELLOW

One at a time may be OOS for calibration.

ENCLOSURE 6
(Page 7 of 9)

MINIMUM REQUIRED EQUIPMENT, PHASE II, REDUCED DECAY HEAT LOAD AND RCS TEMP LESS THAN 200 DEGREES WITH AT LEAST TWO RCS LOOPS FILLED

Function	Required Equipment	Contingency Action	Color Code
Shutdown Monitoring Instrumentation (Cont'd)	One Channel of Reactor Vessel Level HJTC (QSPDS)	1. Take action to restore at least one channel as soon as possible. 2. Maximize RCS inventory as much as is allowed by plant conditions. 3. Maintain RCS greater than 10 percent Wide Range Pressurizer Level.	0 - WHITE
	One Channel of Containment Water Level Indication	1. Take action to restore one channel to service as soon as possible.	0 - WHITE
	Two Channels of Containment Sump Level Indication	1. Restore two channels to service as soon as possible. 2. Suspend activities that may result in increased sump level. 3. Verify that any temporary drain hoses are not resulting in loss of RCS inventory at least once per shift.	1 – WHITE 0 - YELLOW
	One of four channels of Pressurizer Level Indication +	1. Suspend activities which may result in RCS inventory loss.	0 - WHITE
	RCS Pressure Instruments PT-402, PT-403, and PT-405	1. Verify sufficient OMS trains are still available. 2. Secure power to any MOV which could result in RHR loss due to unwanted action from an unavailable pressure channel. (N/A if interlocks defeated.) 3. Notify the Operations, Work Controls, Maintenance, and Plant Managers.	1 – YELLOW 0 – ORANGE
	RCS Wide Range T_{HOT} and T_{COLD}: At least one channel per loop	1. Verify the availability of two CETs. 2. Verify that OMS controls are not affected by the unavailable channel.	Per Loop only T_{HOT} or T_{COLD} – WHITE NONE – YELLOW

ENCLOSURE 6
(Page 8 of 9)

MINIMUM REQUIRED EQUIPMENT, PHASE II, REDUCED DECAY HEAT LOAD AND RCS TEMP LESS THAN 200 DEGREES WITH RCS LOOPS FILLED

Function / Support Equipment	Required Equipment	Contingency Action	Color Code
Containment Closure	Equipment Hatch (capable of being closed with four bolts in accordance with Enclosure 13) *	1. Suspend activities that risk required Decay Heat Removal Equipment. 2. Initiate action to restore the capability to close the hatch in the required time frame. 3. Notify the Maintenance, Operations, Work Controls, and Plant Managers.	Required Time Met - GREEN Required Time Not Met (TCN Required) - YELLOW
	Personnel Hatch (capable of being closed in accordance with Enclosure 13) *	1. Suspend activities that risk required Decay Heat Removal Equipment. 2. Initiate action to restore the capability to close the hatch in the required time frame. 3. Notify the Maintenance, Operations, Work Controls, and Plant Managers.	
	Containment Penetrations (At least one valve in each penetration that is **NOT** pressurized should be kept closed or capable of being closed in accordance with Enclosure 13) Exceptions may be taken under administrative controls for testing, surveillance, and maintenance.	1. If an exception is taken, and at least one valve in the penetration is capable of closure, either manually from the Control Room or locally, the penetration shall be logged on Attachment 3. The log entry shall identify the actions necessary to close the penetration. 2. If an exception is taken, and the penetration is **NOT** capable of being closed by at least one valve, a **TCN** with a contingency plan to achieve closure is required **PRIOR** to authorizing work on the penetration. 3. Initiate action to restore closure capability. 4. Suspend activities that would risk required Decay Heat Removal Equipment. 5. Notify the Maintenance, Operations, Work Controls, and Plant Managers.	
Risk Significant Equipment	One Auxiliary Building Exhaust Fan	1. **IF** out-of-service time is to exceed 119 hours, **THEN** notify the Work Controls Manager and Plant Manager. 2. Assess the impact on the operating unit. 3. Assess the impact on the Operating RHR pump.	0 - YELLOW

* Capability includes provisions for unavailability of AC power and environmental conditions expected.

ENCLOSURE 6
(Page 9 of 9)

MINIMUM REQUIRED EQUIPMENT, PHASE II, REDUCED DECAY HEAT LOAD AND RCS TEMP LESS THAN 200 DEGREES WITH RCS LOOPS FILLED

Support Equipment	Required Equipment	Contingency Action	Color Code
Risk Significant Equipment (Cont'd)	One Diesel Driven Instrument Air Compressor **AND** the Instrument Air Cross Tie Lines	1. Verify the availability of a portable Instrument Air Compressor. 2. Verify the availability of the Instrument Air Cross Tie. 3. **IF** out-of-service time is to exceed 548 hours, **THEN** notify the Work Controls Manager and Plant Manager. 4. Assess the impact on the operating unit.	0 – YELLOW
	Vital DC Room HVAC - Two of three units required E16D E16E E16F	1. Monitor temperature in the Inverter and DC Equipment Rooms. 2. Install portable fans or verify availability of portable fans. 3. Assess the impact on the operating unit.	1 – WHITE 0 - YELLOW
	Service Water Pumps - One Electric pump **AND** one Diesel driven pump	1. Assess the impact on the operating unit.	Loss of 1 or more - WHITE

ENCLOSURE 7
(Page 1 of 2)

MINIMUM REQUIRED EQUIPMENT SPENT FUEL POOL DURING REFUELING OUTAGES

System	Required Equipment	Contingency Action	Color Code
Spent Fuel Cooling	SFP Cooling Pump A **AND** B	1. Take immediate action to repair the failed pump, or switch to the other pump. 2. Establish Emergency SFP Cooling Pump operation per 3/4-ONOP-033.1, Spent Fuel Pit (SFP) Cooling System Malfunction. 3. Notify the Operations, Work Controls, Maintenance, and Plant Managers. 4. Monitor Spent Fuel Pool temperature and level frequently. 5. Suspend any activities that would risk remaining equipment required (ICW, CCW, Electrical, Makeup). 6. Go to 3/4-ONOP-033.1, SPENT FUEL PIT (SFP) COOLING SYSTEM MALFUNCTION.	1 - YELLOW 0 – RED
	Two ICW Pumps	1. Go to 3/4-ONOP-019, INTAKE COOLING WATER MALFUNCTION, for loss of ICW. 2. Initiate action to restore at least one (1) ICW Pump to service. 3. Monitor SFP temperature and level periodically. 4. Notify the Operations, Maintenance, Work Controls, and Plant Managers. 5. Go to 3/4-ONOP-033.1, SPENT FUEL PIT (SFP) COOLING SYSTEM MALFUNCTION.	1 - YELLOW 0 - RED
	One ICW Header	1. Obtain Operations and Plant Manager permission prior to removing an ICW Header from service. 2. Verify one ICW pump **AND** one CCW Heat Exchanger are aligned to the functional header. 3. Verify functional header basket strainer is clean. 4. Initiate actions to restore at least one header to functional status. 5. Take actions as described for ICW Pump.	0 - RED
	Two CCW Pumps	1. Take action to restore at least one pump to service. 2. Go to 3/4-ONOP-030, COMPONENT COOLING WATER MALFUNCTION, for loss of CCW. 3. Notify Operations, Maintenance, Work Controls, and Plant Managers. 4. Monitor SFP temperature and level frequently. 5. Go to 3/4-ONOP-033.1, SPENT FUEL PIT (SFP) COOLING SYSTEM MALFUNCTION.	1 - YELLOW 0 - RED
	One CCW Heat Exchanger	1. Take actions as described for CCW pump.	0 - RED

ENCLOSURE 7
(Page 2 of 2)

MINIMUM REQUIRED EQUIPMENT SPENT FUEL POOL DURING REFUELING OUTAGES

Function / System	Required Equipment	Contingency Action	Color Code
Spent Fuel Cooling	A **AND** B 4KV Bus	1. Go to 3/4-ONOP-004, LOSS OF OFF-SITE POWER, for loss of off-site power. 2. Take action to restore out-of-service components. 3. Notify Operations, Maintenance, Work Controls, and Plant Managers. 4. Go to appropriate procedure below: 3/4-ONOP-004.2, LOSS OF A 4KV BUS 3/4-ONOP-004.3, LOSS OF B 4KV BUS	1 - YELLOW 0 bus - RED
	Spent Fuel Pit Exhaust Fan	1. Initiate action to restore exhaust fan to service. 2. Notify the Operations, Work Controls, Maintenance, and Plant Managers. 3. Suspend any activities that would risk Spent Fuel Pool Cooling capabilities.	0 - WHITE
Onsite/ Offsite Power Function	One Emergency Diesel Generator on the Associated Unit	1. Take action to restore the unavailable EDG to service. 2. Suspend activities that may risk the off-site power sources. 3. Verify the availability of the Station Blackout Ties. 4. Verify the ability to energize A **OR** B 4KV Bus from either unit C Bus.	0 - ORANGE
	C 480 Volt Load Center	1. Initiate action to restore power to C load center. 2. Notify Operations, Maintenance, Work Controls, and Plant Managers. 3. Verify the ability to power the Emergency SFP Cooling Pump IAW 3/4-OP-033, Spent Fuel Pit Cooling System. 4. Monitor SFP temperature and level frequently. 5. Go to 3/4-ONOP-033.1, SPENT FUEL PIT (SFP) COOLING SYSTEM MALFUNCTION.	0 - YELLOW W/ALT SFP COOLING 0 - RED W/NO ALT SFP COOLING
SFP Water Makeup Sources	2 of following water sources: - RWST and RWST purification pump - PWT and PW pump - CVS Holdup Tank and Recirc Pump	1. Initiate actions to restore SFP makeup source in accordance with 3/4-OP-033. 2. Consider Fire Protection System and dual hose station. 3. Notify Operations, Maintenance, Work Controls and Plant Managers. 4. Monitor SFP level and temperature frequently. 5. Suspend all activities that would risk spent fuel cooling capabilities.	1 or less – YELLOW

ENCLOSURE 8
(Page 1 of 1)

UNIT 4 2000
REFUELING OUTAGE OVERVIEW

UNIT 4 2000
REFUELING OUTAGE OVERVIEW

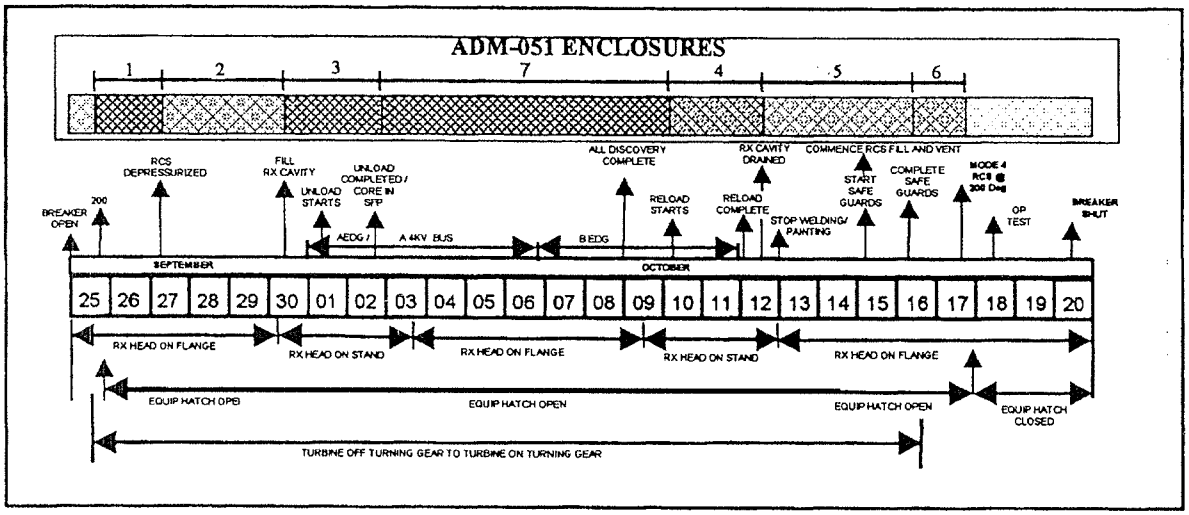

ENCLOSURE 9
(Page 1 of 2)

SAMPLE OUTAGE COMMUNICATIONS TOOL

03/28/05 12:40 PM

Turkey Point Nuclear XX/XX/XX
PT4-22 – OCC Turnover (Nights to Days)

Industrial Safety & Human Performance

Injuries In Last 24 Hours : 0
TOTALS: 0 MINOR 0 OSHA RECORDABLES
Injuries: None
Near Misses: None

SAFETY NEVER TAKES A DAY OFF!

Outage Dose Status

Last 12 Hours: Actual – 0.000 Rem Estimate - 0.000 Rem
Outage Total: Actual – 0.0000 Rem Estimate - 0.000 Rem
PCR's last 12 Hours: 0
PCR's Outage Total : 0 Level I
0 Level II
Posting Changes:

Unit 3 Areas Of Focus

Unit 4 Status: Mode 3

Outage Unit Risk

Risk Status:
Critical Equipment:
Evolutions in Progress: None
Evolutions planned for next 24 hours:

Major Ops Evolutions

Critical Path & Priority Activity Status:

•

Expected Upcoming Milestones

•
•

Major Work Completed in Last 24 hours

•
•
•
•
•
•

Major Maintenance Activities

•
•
•
•
•
•

Major Engineering Activities

•
•
•

Parts Issues

•
•
•
•

Outage Paper Work Status

Total in Sched:		Total Scheduled To Date	Total Received
Total WO's:	0	0	0
Red WO's:	0	0	0
Yellow WO's:	0	0	0
WA's:	0	0	0
ks:	0	0	0
DL's:	0	0	0
A's:	0	0	0
GL91-18:	0	0	0
Tops:	0	0	0

Major Projects Activities

•
•
•
•
•
•

Turbine Activities

Working Complete

G\WC\Common\OCC\U3 Cyc 21 – 2004\PT3-21 Turnover Sheets\Turnover (date days/nights or nights to days)

ENCLOSURE 9
(Page 2 of 2)

SAMPLE OUTAGE COMMUNICATIONS TOOL

03/28/05 12:40 PM

Protected Equipment

FUNCTION	REQUIRED EQUIPMENT
DECAY HEAT REMOVAL	3A & 3B RHR Pumps/ CCW/ ICW Pp – SEE ENCLOSURE 6 0-ADM-051 FOR LIST OF EQUIPMENT
INVENTORY CONTROL	2 Chg Pumps with Boron Flow path – SEE ENCLOSURE 6 0-ADM-051 FOR LIST OF EQUIPMENT
ON-SITE , OFF-SITE POWER	A, B, C & D 4KV Busses/One EDG – SEE ENCLOSURE 6 0-ADM-051 FOR LIST OF EQUIPMENT
REACTIVITY CONTROL	Boron Concentration meets Plant Curve Book – SEE ENCL. 6 0-ADM-051 FOR LIST OF EQUIPMENT
SHUTDOWN MONITOR INSTRUMENTATION	2 Source Range Inst. - SEE ENCLOSURE 6 0-ADM-051 FOR LIST OF EQUIPMENT
CONTAINMENT CLOSURE	30 Minute Closure – SEE ENCLOSURE 6 0-ADM-051 FOR LIST OF EQUIPMENT
RISK SIGNIFICANT EQUIPMENT	2 Aux. Bldg. Exh. Fans / One Diesel I. Air Comp. - SEE ENCLOSURE 6 0-ADM-051 FOR LIST OF EQUIPMENT

ENCLOSURE 10
(Page 1 of 4)

MODES 5, 6, AND DEFUELED ACTIVE SHUTDOWN COOLING EQUIPMENT PROTECTED TRAIN CONCEPT

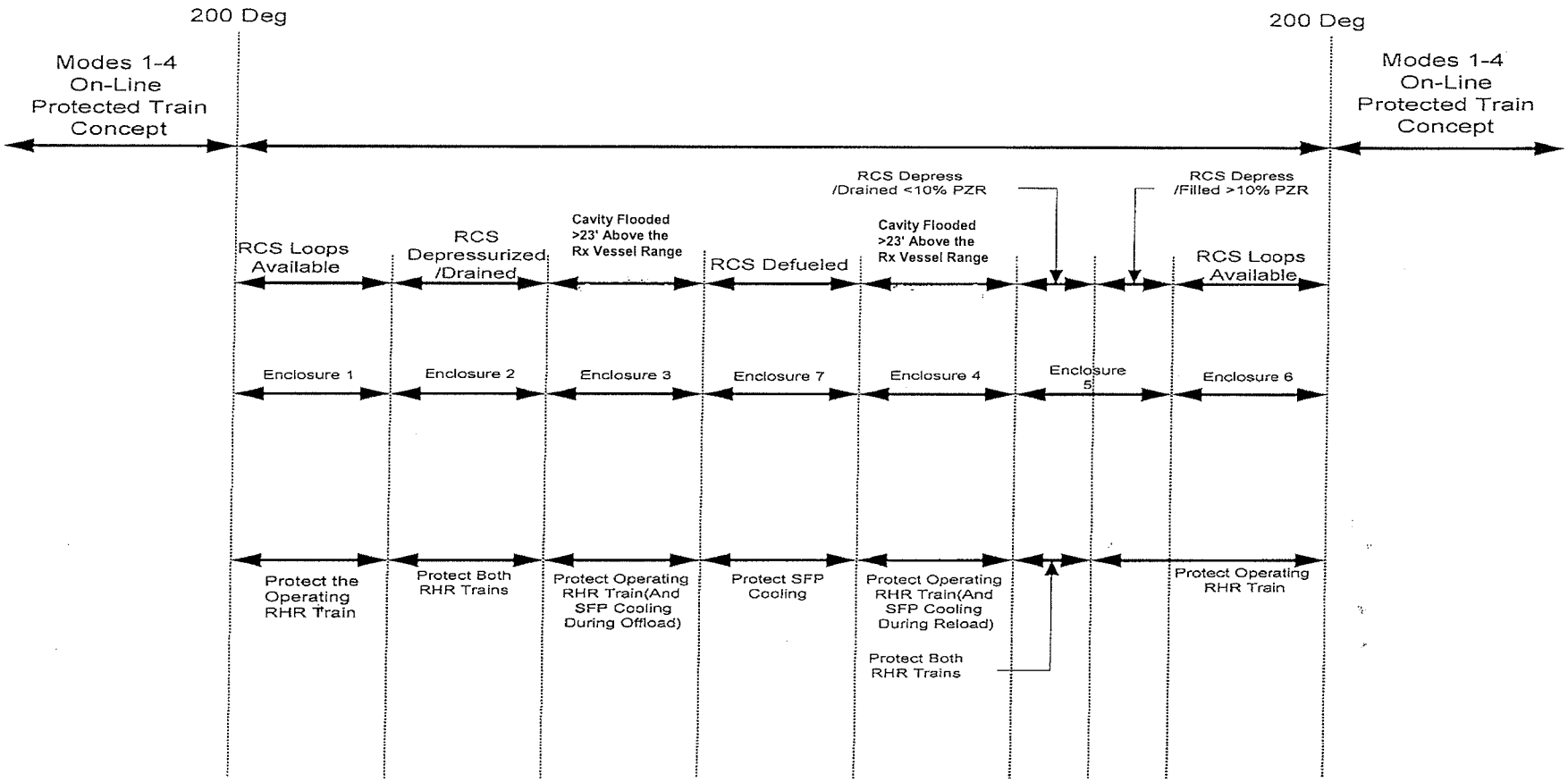

ENCLOSURE 10
(Page 2 of 4)

MODES 5, 6, AND DEFUELED ACTIVE SHUTDOWN COOLING EQUIPMENT PROTECTED TRAIN CONCEPT

NOTE

Specific procedural guidance for the placement and removal of signs and barriers is provided in Attachments 8 through 21.

Enclosure 1 RCS Loops Available

Protect the following equipment with signs and/or barriers:

- Switchyard bay for the transformer (Startup or Main) supplying the safety related 4 kv buses.
- Transformer (Startup or Main & Aux) supplying the safety related 4 kv buses.
- Operating RHR train 4kv switchgear
- Operating RHR train vital 480v load centers
- Operating RHR train EDG rooms
- 3A MCC Vital Section (3A Train only)
- D bus room (if C CCW pump or C ICW pump is required for the operating RHR Train)
- Operating RHR pump room
- Operating RHR train CCW pump
- Operating RHR train ICW pump
- 2 of 3 CCW Hx

Enclosure 2 and 5 (Pressurizer Drained <10%) Without RCS Loops Available

Protect the following equipment with signs and/or barriers:

- Switchyard bay for the transformer (Startup or Main) supplying the safety related 4 kv buses.
- Transformer (Startup or Main & Aux) supplying the safety related 4 kv buses.
- Both A&B 4kv switchgear
- Vital 480v load centers
- Both EDG rooms
- 3A MCC Vital Section (3A Train only)
- D bus room (if C CCW pump or C ICW pump is required for the protected RHR Train)
- Both RHR pump rooms
- Operating RHR train CCW pump
- Operating RHR train ICW pump
- 1 non-operating RHR train CCW pump
- 1 non-operating RHR train ICW pump
- 2 of 3 CCW Hx

ENCLOSURE 10
(Page 3 of 4)

MODES 5, 6, AND DEFUELED ACTIVE SHUTDOWN COOLING EQUIPMENT PROTECTED TRAIN CONCEPT

Enclosure 3 and 4 Cavity Flooded >23' Above the Vessel Flange

Protect the following equipment with signs and/or barriers:

- Switchyard bay for the transformer (Startup or Main) supplying the safety related 4 kv buses
- Transformer (Startup or Main & Aux) supplying the safety related 4 kv buses
- Operating RHR train 4kv switchgear
- Operating RHR train vital 480v load centers or all vital 480v load centers when cross-tied
- C 480v load center (if core less than fully loaded)
- SFP cooling equipment room and heat exchanger (if core less than fully loaded)
- Operating RHR train EDG rooms
- 3A MCC Vital Section (3A Train only)
- D bus room (if C CCW pump or C ICW pump is required for the operating RHR Train)
- Operating RHR pump room
- Operating RHR train CCW pump
- Operating RHR train ICW pump
- 2 of 3 CCW Hx

Enclosure 5 (Pressurizer Filled >10%) Without RCS Loops Available

Protect the following equipment with signs and/or barriers:

- Switchyard bay for the transformer (Startup or Main) supplying the safety related 4 kv buses
- Transformer (Startup or Main & Aux) supplying the safety related 4 kv buses
- Operating RHR train 4kv switchgear
- Operating RHR train vital 480v load centers
- Operating RHR train EDG rooms
- 3A MCC Vital Section (3A Train only)
- D bus room (if C CCW pump or C ICW pump is required for the operating RHR Train)
- Operating RHR pump room
- Operating RHR train CCW pump
- Operating RHR train ICW pump
- 2 of 3 CCW Hx

Enclosure 6 RCS Loops Available

Protect the following equipment with signs and/or barriers:

- Switchyard bay for the transformer (Startup or Main) supplying the safety related 4 kv buses
- Transformer (Startup or Main & Aux) supplying the safety related 4 kv buses
- Operating RHR train 4kv switchgear
- Operating RHR train vital 480v load centers
- Operating RHR train EDG rooms
- 3A MCC Vital Section (3A Train only)
- D bus room (if C CCW pump or C ICW pump is required for the protected RHR Train)
- Operating RHR pump room
- Operating RHR train CCW pump
- Operating RHR train ICW pump
- 2 of 3 CCW Hx

ENCLOSURE 10
(Page 4 of 4)

MODES 5, 6, AND DEFUELED ACTIVE SHUTDOWN COOLING EQUIPMENT PROTECTED TRAIN CONCEPT

Enclosure 7 RCS Defueled

Protect the following equipment with signs and/or barriers:

- Switchyard bay for the transformer (Startup or Main) supplying the safety related 4 kv buses.
- Transformer (Startup or Main & Aux) supplying the safety related 4 kv buses.
- If C 480v load center fed from A 4kv bus:
  - A 4kv switchgear
  - A EDG rooms
  - 3A MCC Vital Section
  - A 480v load center
  - 1 A train CCW pump
  - 1 A train ICW pump
- If C 480v load center fed from D 480v load center:
  - B 4kv switchgear
  - B EDG rooms
  - B and D 480v load centers
  - 1 B train CCW pump
  - 1 B train ICW pump
- C 480v load center or all vital 480v load centers when cross-tied
- SFP cooling equipment room
- D bus room (if C CCW pump or C ICW pump is required for the operating SFP cooling loop)
- 1 of 3 CCW Hx

ENCLOSURE 11
(Page 1 of 1)

OUTAGE ACTIVITY REVIEW CHECKLIST

1.	Does the activity involve work in or affecting the Switchyard?	Yes ☐	No ☐
2.	Does the activity affect, or have the potential to effect, required equipment listed in Enclosures 1 through 7 (Even if not reducing below the minimum Required)?	Yes ☐	No ☐
3.	Does the activity involve configuration, or changing configuration of operating shutdown cooling trains?	Yes ☐	No ☐
4.	Does the activity involve work on or near protected/operating shutdown cooling equipment?	Yes ☐	No ☐
5.	Does the activity challenge containment closure or provide a direct path to atmosphere that does not meet the requirements of Attachment 3?	Yes ☐	No ☐
6.	Does the activity involve a freeze seal that threatens inventory control?	Yes ☐	No ☐
7.	Does the activity involve the potential introduction of hazards (e.g., fire, flooding, etc.) *	Yes ☐	No ☐
8.	Does the activity or evolution have the potential to result in a rapid loss of RCS or SFP inventory in the event of an active failure or personnel error.	Yes ☐	No ☐

A **Yes** answer indicates that the activity should be considered a **R-logic** activity in the outage schedule unless further review concludes the activity is adequately controlled by other existing processes or procedures.

* Evaluate hot work performed in areas that risk Key Safe Shutdown Functions. Determine if contingency plans are required.

ENCLOSURE 12
(Page 1 of 1)

COMPONENT AVAILABILITY SCREENING CHECKLIST

NOTE

A conservative approach should be employed when assessing component availability.

1. If the component is ECO tagged, is it under operations control, or capable of being placed under operations control, in a reasonable time frame? (i.e., the component is not under a danger tag) Yes ☐ No ☐
2. Can the component be restored in a time frame consistent with the anticipated need for the component? Yes ☐ No ☐
3. Is the component intact and can be made functional by automatic or simple manual action? Yes ☐ No ☐
4. Is the contingency plan for the restoration of the component well communicated and understood by all groups involved? Yes ☐ No ☐
5. Is the contingency plan for restoration of the component adequate and reasonably expected to be accomplished? Yes ☐ No ☐
6. Is the component under a non-intrusive surveillance not requiring extensive efforts(i.e., filling and venting of systems, etc) to restore? Yes ☐ No ☐
7. If the component or function is temporary, has the component been tested? Yes ☐ No ☐

All **Yes** answers support considering the component available. Any **No** answers indicate the component should be considered unavailable.

ENCLOSURE 13
(Page 1 of 1)

CONTAINMENT CLOSURE TIME LIMITS

0-ADM-051 Enclosure	Ctmt Closure Time Limit	May be extended with TCN?	Comments
1	30 minutes	Y	
2 (Not RI, time to core boil <30 minutes)	Time to core boiling	N	NUMARC 91-06 Guidelines
2 (Not RI, time to core boil >30 minutes)	30 minutes	Y	Still limited to time to core boiling (NUMARC 91-06)
2 (RI, time to core boil <30 minutes)	Time to core boiling	N	NUMARC 91-06 Guidelines
2 (RI, time to core boil >30 minutes)	30 minutes	N	NRC Commitment (GL88-17)
3 (no core alts)	30 minutes	Y	Time to core boiling is assumed to be >30 minutes in this enclosure. Still limited to time to core boiling. NUMARC 91-06 Guidelines
3 (During core alts)	30 minutes	N	NUMARC 93-01 Guidelines [Commitment 2.3.2]
4 (no core alts)	30 minutes	Y	Time to core boiling is assumed to be >30 minutes in this enclosure. Still limited to time to core boiling. NUMARC 91-06 Guidelines
4 (During core alts)	30 minutes	N	NUMARC 93-01 Guidelines [Commitment 2.3.2]
5 (Not RI, time to core boil <30 minutes)	Time to core boiling	N	NUMARC 91-06 Guidelines
5 (Not RI, time to core boil >30 minutes)	30 minutes	Y	Still limited to time to core boiling. NUMARC 91-06 Guidelines
5 (RI, time to core boil <30 minutes)	Time to core boiling	N	NUMARC 91-06 Guidelines
5 (RI, time to core boil >30 minutes)	30 minutes	N	NRC Commitment (GL88-17)
6	30 minutes	Y	
7	N/A		
RI - Reduced Inventory			

ATTACHMENT 1
(Page 1 of 1)

INTENTIONALLY LEFT BLANK

ATTACHMENT 2
(Page 1 of 2)

TEMPORARY CHANGE NOTIFICATION

Temporary Change Number _____ _____ _____
UNIT CYCLE or **SNO** NUMBER

System Number _____ System Name _____

Initiating Document _____

Description:

_____

_____

_____

_____

_____

_____

Expected Date and Duration of Change _____

Plant Contact _____

Work Phone _____ Home Phone _____ Beeper _____

KEY SAFE SHUTDOWN FUNCTION(S) AFFECTED:

Decay Heat Removal	Inventory Control	Power Availability	Reactivity Control	Containment Integrity	Instrumen-tation	Fire Protection	Risk Significant Support Equipment

Evaluation/Assessment of Key Safe Shutdown Functions

_____

_____

_____

_____

_____

_____

Note: Evaluation should include:

1. Consideration of common or unit specific equipment that affects the other unit.
2. Review of all TCNs in effect during the duration of this TCN to ensure the total impact of all equipment out of service is considered.

SAMPLE

ATTACHMENT 2
(Page 2 of 2)

TEMPORARY CHANGE NOTIFICATION

Temporary Change Number _____ _____ _____

Affected Drawings and Procedures (Attach Markups and OTSCs)

_____

_____

_____

_____

_____

_____

_____

Special Notes/Off Normal Guidance/Contingencies:

_____

_____

_____

_____

_____

_____

_____

☐ YES ☐ NO PWO requires contingency actions

If YES, then verify PWO contingencies are incorporated and reviewed as acceptable.

Approval/Acceptance

Risk Assessment Team Chairperson _____ Date _____

System Engineer _____ NPS _____ Date _____

Operations Manager _____ Plant General Manager _____

Engineering Manager _____ Work Controls Manager _____

Maintenance Manager _____

SAMPLE

ATTACHMENT 3
(Page 1 of 3)

CONTAINMENT PENETRATION EXCEPTIONS

Part A

Penetration	Actions Required For Closure	Department Responsible For Closure	Estimated Time to Close	Date Entered	Date Closed

SAMPLE

ATTACHMENT 3
(Page 2 of 3)

CONTAINMENT PENETRATION EXCEPTIONS
EQUIPMENT HATCH DOOR

Date:_____

Part B

Date and Time Accepted	Containment Coordinator/Designee Name (Print)	Signature*	Notify SM/US Ext 6493

* Signature - Indicates designated individual accepts responsibility to close the Containment Equipment Hatch with a minimum of 4 bolts in accordance with 0-ADM-051, Enclosure 13, when and if directed by the Shift Manager. The designated person has an assigned crew of individuals and has verified the necessary equipment to close the Equipment Hatch is staged in accordance with 0–GMM–051.2, including provisions for unavailability of AC power and environmental conditions expected.

Reviewed by:_____
Shift Manager or SRO Designee

SAMPLE

ATTACHMENT 3
(Page 3 of 3)

CONTAINMENT PENETRATION EXCEPTIONS
PERSONNEL AIRLOCK DOOR

Date:_____

Part C

Date and Time Accepted	Name (Print)	Signature*

* Signature – Indicates designated individual accepts responsibility to close in an expeditious manner within 30 minutes, or prior to time to core boiling, (whichever is less) at least one Containment Personnel Airlock Door when directed by the Shift Manager. If RCS level lower than 3 feet below the vessel prior to fuel offload, control in accordance with 3/4-OP-041.9 until RCS level returns above 3 feet below the vessel. [Commitment Step-2.3.1]

Reviewed by: _____
Shift Manager or SRO Designee

SAMPLE

ATTACHMENT 4
(Page 1 of 11)

OUTAGE RISK ASSESSMENT AND PROTECTED TRAIN POSTING VERIFICATION

INSTRUCTIONS FOR COMPLETING OUTAGE RISK ASSESSMENT FORMS

NOTES

- *Complete Parts A and B at the following times:*
  - *Prior to shift turnover and to be available for the crew meetings.*
  - *When changing enclosures or minimum equipment as used to determine risk color.*
  - *Upon commencing or completing fuel movement in containment or the SFP.*
- *Part B should be completed each shift when swapping protected train equipment*
- *Updates to Attachment 4, Part A and B should be provided as soon as reasonably possible.*
- *Part C is a daily verification of protected train postings and should be performed each dayshift and documented in the RCO logs when completed.*

Completion of Part A

1. Evaluate color determination using the current enclosure based on plant conditions.
2. Obtain review of Attachment 4 Part A from the Shift Manager or designee.
3. Provide copy to the OCC Manager.
4. Update the Risk Assessment Books in the Control Room and the WCC.

NOTE

Part B will be maintained electronically and the following pages provide an example of the information contained in the electronic version.

Completion of Part B

1. Open the electronic version of the Risk Control Form.
2. Obtain a copy of the latest revision to the outage schedule from the Work Controls web site.
3. Open the Risk Control Form worksheet tab corresponding to the applicable enclosure of 0-ADM-051.

ATTACHMENT 4
(Page 2 of 11)

OUTAGE RISK ASSESSMENT AND PROTECTED TRAIN POSTING VERIFICATION

INSTRUCTIONS FOR COMPLETING OUTAGE RISK ASSESSMENT FORMS

4. Update the Risk Control Form for the current plant conditions. Identify the status of components by the following convention:
   a. Protected or required components per 0-ADM-51 will be shaded a light gray.
   b. Running or energized equipment will be bolded.
5. Update the top of the form with current date, time and risk color determination.
6. Calculate and record the time to boil for the reactor and the SFP.
7. Include the applicable TCNs number and title if currently in affect.
8. **IF** risk color is less than white due to an equipment failure or unanticipated change in plant condition and a TCN has not been completed, **THEN** provide information identifying the at risk components.
9. Provide the completed copy to the Shift Manager or SRO designee for review.
10. Insert the name of the preparer and the reviewer on the bottom of the form.
11. Save a copy of the completed form on the G:\Wc\DeptShares.
12. Print out four copies of the completed Attachment 4, Part B.
13. Using the appropriate colored Highlighter, highlight (in the appropriate color) the risk status line for each of the four copies.
14. Post one of each of the four copies at the following locations:
    - Control Room
    - Inside the OCC
    - WCC
    - Operations Support Group (N/A if not in operation for a SNO)
15. When the update is posted at each location, obtain an acceptance signature from the manager or supervisor of that area at the bottom of the form acknowledging that they are aware that the Attachment 4 has been updated.

Completion of Part C

1. Obtain a copy of the current protected train posting attachment in the risk assessment book.
2. Perform a check of the protected train postings:
   a. Ensure the proper placement of postings and barriers has been maintained to adequately identify protected equipment or areas.
   b. Ensure no unauthorized work is occurring in these protected areas.
3. Document completion of this walk down in the appropriate RCO logbook.

ATTACHMENT 4
(Page 3 of 11)

OUTAGE RISK ASSESSMENT AND PROTECTED TRAIN POSTING VERIFICATION

COLOR CODE DETERMINATION WORKSHEET

PART A

KEY SAFE SHUTDOWN FUNCTION	EQUIPMENT	EQUIPMENT COLOR CODE	FUNCTION COLOR CODE
Decay Heat Removal	RHR Pumps	G Y O R	
	RHR Hx	G Y O R	
	CCW Pumps	G Y O R	
	CCW Hx	G Y O R	
	ICW Pumps	G Y O R	
	ICW Headers	G Y O R	
	Feed Source/Flow Path	G Y	
	SDTA	G Y	
Inventory Control	Charging Pumps	G Y O R	
	Chg Flowpath	G O R	
	Primary Wtr Pmp	G Y O	
	BA Trf Pumps	G Y O R	
	HHSI Pumps	G Y O R	
	RCS Inventory	G Y O	
Power Availability	Transformers	G Y O R	
	A, B, D Busses	G Y O R	
	EDG	G Y O	
	Sta Blkout Tie	G Y O	
Reactivity Control	Boron Conc	G R	
Instrumentation	Source Range	G W Y	
	ARMs Channels	G W	
	PRMS Channels	G W	
	CETs	G Y O R	
	RVLIS	G W Y 0	
	Cont Water Ind	G W	
	Cont Sump Ind	G W Y	
	PRZ Lvl Ind	G W Y	
	RCS Press Ind	G W Y O	
	RCS Wde Rng Temp	G W Y	
	Rx Drndwn Lvl	G Y O R	

ATTACHMENT 4
(Page 4 of 11)

OUTAGE RISK ASSESSMENT AND PROTECTED TRAIN POSTING VERIFICATION

COLOR CODE DETERMINATION WORKSHEET

PART A

KEY SAFE SHUTDOWN FUNCTION / SYSTEM / SUPPORT EQUIPMENT	EQUIPMENT	EQUIPMENT COLOR CODE	FUNCTION COLOR CODE
Containment Integrity	Penetration Isolation	G Y O	
Risk Significant Equipment	Aux Bldg Exh Fan	G Y	
	IAC – Diesel D	G Y	
	DC Room HVAC	G W Y	
	Svc Water Pumps	G W	
Spent Fuel Cooling	SFP Cooling Pump A and B	G Y O R	
	Two ICW Pumps	G Y R	
	One ICW Header	G R	
	Two CCW Pumps	G Y R	
	One CCW Hx	G R	
	A and B SWGR	G Y R	
	One EDG	G O	
	C Load Center	G Y O R	
	SFP Exh Fan	G W	
SF Makeup WTR	2 of four	G Y	

Dayshift/Nightshift (circle one)

Prepared by:_____ Enclosure_____

Date:_____ Time:_____

Risk:_____

Reviewed by:_____ _____
Shift Manager/SRO Designee *Date*

ATTACHMENT 4
(Page 5 of 11)

OUTAGE RISK ASSESSMENT AND PROTECTED TRAIN POSTING VERIFICATION
PART B - RISK CONTROL

PART B - RISK CONTROL - Enclosure 1

Phase 1, Fuel in Reactor, RCS Temperature < 200 F, At Least Two RCS Loops Available

Status: COLOR

Date: xx/xx/xx Time: xxxx

Designation: Shaded = Protected Bold = Running or Energized

Protected Train	4A	4B			
RHR Pumps	4A	4B			
RHR Heat Exchangers	4A	4B			
CCW Pumps	4A	4B	4C		
CCW Heat Exchangers	4A	4B	4C		
ICW Pumps	4A	4B	4C		
ICW Headers	A	B			
Source of Feedwater					
SGFP	4A	4B			
SSGFP	A	B			
Condensate Pump	4A	4B	4C		
Condensate Transfer Pump	Unit 3	Unit 4			
SGWL Pump	4A	4B	4C		
Steam Dump to Atmosphere	CV-4-1606	CV-4-1607	CV-4-1608		
Charging Pumps	4A	4B	4C		
Boration Source	BAST	RWST	Tank Level =		
Primary Water Pumps	4A	4B	3A	3B	
Boric Acid Pumps	4A	4B	3A	3B	
HHSI Pumps	4A	4B	3A	3B	
Offsite Power Source	U4 Startup Xfmr	U4 Aux Xfmr Backfeed	U3 Startup Xfmr	C Bus Xfmr	
4160 Bus	4A	4B	4C	4D	
Emergency Diesels	4A	4B			
Station Blackout Tie	4AD07	3AD07			
Shutdown Boron Concentration Adequate	Yes	No	Actual =	Required =	
Source Range	N-31	N-32	"A" Gamma metrics	"B" Gamma metrics	
ARMS Channels	R1404	R1405	R1406	R1408	R1422
PRMS Channels	R-11	R-12	R-14	R-19	
Two Core Exit Thermocouples	Yes	No			
QSPDS Channel Reactor Vessel HJTC	A	B	Reactor Disassembled		
Containment Water Level	LI-4-6309A	LI-4-6309B			
Containment Sump Level	LI-4-6308A	LI-4-6308B	LT-4-1546		
Pressurizer Level	LT-4-459	LT-4-460	LT-4-461	LT-4-462	
RCS Pressure	PT-4-402	PT-4-403	PT-4-405		
RCS Wide Range THOT	TI-4-412	TI-4-422	TI-4-432		
RCS Wide Range TCOLD	TI-4-410	TI-4-420	TI-4-430		
Equipment Hatch	Open	Closed			
Personnel Hatch	Open	Closed			
Aux Bldg Exhaust Fan	A	B			
Instrument Air CD	3CD	4CD			
Instrument Air Crosstie	Yes	No			
Vital D/C Room HVAC	E16D	E16E	E16F		
Service Water Pumps	A	B	C	D	
Reactor Time to Boil	xx	Minutes			
Spent Fuel Pool Time to Boil	xxx	Minutes			

Applicable TCNs

Reason for Reduced Risk

Performed By Reviewed By:

Accepted By _____ _____/_____

Cont Room, OSC, WCC, OSG Date / Time

ATTACHMENT 4
(Page 6 of 11)

OUTAGE RISK ASSESSMENT AND PROTECTED TRAIN POSTING VERIFICATION
PART B - RISK CONTROL

PART B - RISK CONTROL - Enclosure 2

Phase 1, Fuel in Reactor, RCS Temperature < 200 F, No RCS Loops Available

Status: COLOR

Date: xx/xx/xx Time: xxxx

Designation: Shaded = Protected Bold = Running or Energized

Protected Train	4A	4B			
RHR Pumps	4A	4B			
RHR Heat Exchangers	4A	4B			
CCW Pumps	4A	4B	4C		
CCW Heat Exchangers	4A	4B	4C		
ICW Pumps	4A	4B	4C		
ICW Headers	A	B			
Charging Pumps	4A	4B	4C		
Boration Source	BAST	RWST	Tank Level =		
Primary Water Pumps	4A	4B	3A	3B	
Boric Acid Pumps	4A	4B	3A	3B	
HHSI Pumps	4A	4B	3A	3B	
RCS Inventory at or above 5% PRZ Level	Yes	No			
Offsite Power Source	U4 Startup Xfmr	U4 Aux Xfmr Backfeed	U3 Startup Xfmr	Unit 4 C Bus Xfmr	Unit 3 C Bus Xfmr
4160 Bus	4A	4B	4C	4D	
Emergency Diesels	4A	4B			
Station Blackout Tie	4AD07	3AD07			
480 Volt Load Centers	A, C, H	B, D, H			
Shutdown Boron Concentration Adequate	Yes	No	Actual =	Required =	
Source Range	N-31	N-32	"A" Gamma metrics	"B" Gamma metrics	
ARMS Channels	R1404	R1405	R1406	R1408	R1422
PRMS Channel	R-11	R-12	R-14	R-19	
Two Core Exit Thermocouples	Yes	No	Reactor Disassembled		
QSPDS Channel Reactor Vessel HJTC	A	B	Reactor Disassembled		
Containment Water Level	LI-4-6309A	LI-4-6309B			
Containment Sump Level	LI-4-6308A	LI-4-6308B	LT-4-1546		
Pressurizer Cold Cal Level	LT-4-462				
RCS Pressure	PT-4-402	PT-4-403	PT-4-405		
RCS Wide Range THOT	TI-4-412	TI-4-422	TI-4-432		
RCS Wide Range TCOLD	TI-4-410	TI-4-420	TI-4-430		
RCS Drain Down Level	LIS-4-6421	LI-4-6422	LIS-4-6423		
Equipment Hatch	Open	Closed			
Personnel Hatch	Open	Closed			
Aux Bldg Exhaust Fan	A	B			
Instrument Air CD	3CD	4CD			
Instrument Air Crosstie	Yes	No			
Vital DC Room HVAC	E16D	E16E	E16F		
Service Water Pumps	A	B	C	D	
Reactor Time to Boil	xx	Minutes			
Spent Fuel Pool Time to Boil	xxx	Minutes			

Applicable TCNs

Reason for Reduced Risk

Performed By: Reviewed By:

Accepted By: _____ _____/_____
Cont Room, OSC, WCC, OSG Date / Time

ATTACHMENT 4
(Page 7 of 11)

OUTAGE RISK ASSESSMENT AND PROTECTED TRAIN POSTING VERIFICATION
PART B - RISK CONTROL

PART B - RISK CONTROL - Enclosure 3

Phase 1, Fuel in Reactor, Reactor Cavity Flooded > 23 Feet Above Flange

Status: COLOR

Date: xx/xx/xx Time: xxxx

Designation: Shaded = Protected Bold = Running or Energized

Protected Train	4A	4B			
RHR Pumps	4A	4B			
RHR Heat Exchangers	4A	4B			
CCW Pumps	4A	4B	4C		
CCW Heat Exchangers	4A	4B	4C		
ICW Pumps	4A	4B	4C		
ICW Headers	A	B			
Charging Pumps	4A	4B	4C		
Boration Source	BAST	RWST	Tank Level =		
Primary Water Pumps	4A	4B	3A	3B	
Boric Acid Pumps	4A	4B	3A	3B	
HHSI Pumps	4A	4B	3A	3B	
Offsite Power Source	U4 Startup Xfmr	U4 Aux Xfmr Backfeed	U3 Startup Xfmr	Unit 4 C Bus Xfmr	Unit 3 C Bus Xfmr
4160 Bus	4A	4B	4C	4D	
Emergency Diesels	4A	4B			
Station Blackout Tie	4AD07	3AD07			
Shutdown Boron Concentration Adequate	Yes	No	Actual =	Required =	
Source Range	N-31	N-32	"A" Gamma metrics	"B" Gamma metrics	
ARMS Channels	R1404	R1405	R1406	R1408	R1422
PRMS Channel	R-11	R-12	R-14		
Containment Water Level	LI-4-6309A	LI-4-6309B			
Containment Sump Level	LI-4-6308A	LI-4-6308B	LT-4-1548		
Equipment Hatch	Open	Closed			
Personnel Hatch	Open	Closed			
Aux Bldg Exhaust Fan	A	B			
Instrument Air CD	3CD	4CD			
Instrument Air Crosstie	Yes	No			
Vital DC Room HVAC	E16D	E16E	E16F		
Service Water Pumps	A	B	C	D	
SFP Cooling Pump	A	B			
SFP Exhaust Fan	On	Off			
480 Volt LC 'C' Energized	Yes	No			
SFP Make-up Water Source	RWST & purification pump	PWST & PW pump	CVCS Hold-up Tank & Recirc Pmp		
Reactor Time to Boil	xx	Minutes			
Spent Fuel Pool Time to Boil	xxx	Minutes			

Applicable TCNs

Reason for Reduced Risk

Performed By Reviewed By

Accepted By _____ _____ / _____
Cont Room, OSC, WCC, OSG Date / Time

ATTACHMENT 4
(Page 8 of 11)

OUTAGE RISK ASSESSMENT AND PROTECTED TRAIN POSTING VERIFICATION
PART B - RISK CONTROL

PART B - RISK CONTROL - Enclosure 4

Phase 2, Fuel in Reactor, Reactor Cavity Flooded > 23 Feet Above Flange

Status: COLOR

Date: xx/xx/xx Time: xxxx

Designation: Shaded = Protected Bold = Running or Energized

Protected Train	4A	4B			
RHR Pumps	4A	4B			
RHR Heat Exchangers	4A	4B			
CCW Pumps	4A	4B	4C		
CCW Heat Exchangers	4A	4B	4C		
ICW Pumps	4A	4B	4C		
ICW Header	A	B			
Charging Pump	4A	4B	4C		
Boration Source	BAST	RWST	Tank Level =		
Primary Water Pumps	4A	4B	3A	3B	
Boric Acid Pumps	4A	4B	3A	3B	
HHSI Pumps	4A	4B	3A	3B	
Offsite Power Source	U4 Startup Xfmr	U4 Aux Xfmr Backfeed	U3 Startup Xfmr	Unit 4 C Bus Xfmr	Unit 3 C Bus Xfmr
4160 Bus	4A	4B	4C	4D	
Emergency Diesels	4A	4B			
Station Blackout Tie	4AD07	3AD07			
Shutdown Boron Concentration Adequate	Yes	No	Actual =	Required =	
Source Range	N-31	N-32	"A" Gamma metrics	"B" Gamma metrics	
ARMS Channels	R1404	R1405	R1406	R1408	R1422
PRMS Channel	R-11	R-12	R-14		
Containment Water Level	LI-4-6309A	LI-4-6309B			
Containment Sump Level	LI-4-6308A	LI-4-6308B	LT-4-1546		
Equipment Hatch	Open	Closed			
Personnel Hatch	Open	Closed			
Aux Bldg Exhaust Fan	A	B			
Instrument Air CD	3CD	4CD			
Instrument Air Crosstie	Yes	No			
Vital DC Room HVAC	E16D	E16E	E16F		
Service Water Pumps	A	B	C	D	
SFP Cooling Pump	A	B			
SFP Exhaust Fan	On	Off			
480 Volt LC 'C' Energized	Yes	No			
SFP Make-up Water Source	RWST & purification pump	PWST & PW pump	CVCS Hold-up Tank & Recirc Pmp		
Reactor Time to Boil	xx	Minutes			
Spent Fuel Pool Time to Boil	xxx	Minutes			

Applicable TCNs

Reason for Reduced Risk

Performed By Reviewed By

Accepted By: _____ _____/_____

Cont Room, OSC, WCC, OSG Date / Time

ATTACHMENT 4
(Page 9 of 11)

OUTAGE RISK ASSESSMENT AND PROTECTED TRAIN POSTING VERIFICATION
PART B - RISK CONTROL

PART B - RISK CONTROL - Enclosure 5

Phase 2, Fuel in Reactor, RCS Temperature < 200 F, No RCS Loops Available

Status: COLOR

Date: xx/xx/xx Time: xxxx

Designation: Shaded = Protected Bold = Running or Energized

Protected Train	4A	4B			
RHR Pumps	4A	4B			
RHR Heat Exchangers	4A	4B			
CCW Pumps	4A	4B	4C		
CCW Heat Exchangers	4A	4B	4C		
ICW Pumps	4A	4B	4C		
ICW Headers	A	B			
Charging Pumps	4A	4B	4C		
Boration Source	BAST	RWST	Tank Level =		
Primary Water Pumps	4A	4B	3A	3B	
Boric Acid Pumps	4A	4B	3A	3B	
HHSI Pumps	4A	4B	3A	3B	
RCS Inventory at or above 5% PRZ Level	Yes	No			
Offsite Power Source	U4 Startup Xfmr	U4 Aux Xfmr Backfeed	U3 Startup Xfmr	Unit 4 C Bus Xfmr	Unit 3 C Bus Xfmr
4160 Bus	4A	4B	4C	4D	
Emergency Diesels	4A	4B			
Station Blackout Tie	4AD07	3AD07			
Shutdown Boron Concentration Adequate	Yes	No	Actual =	Required =	
Source Range	N-31	N-32	"A" Gamma metrics	"B" Gamma metrics	
ARMS Channels	R1404	R1405	R1406	R1408	R1422
PRMS Channel	R-11	R-12	R-14		
Two Core Exit Thermocouples	Yes	No	Reactor Disassembled		
QSPDS Channel Reactor Vessel HJTC	A	B	Reactor Disassembled		
Containment Water Level	LI-4-6309A	LI-4-6309B			
Containment Sump Level	LI-4-6308A	LI-4-6308B	LT-4-1546		
Pressurizer Cold Cal Level	LT-4-462				
RCS Pressure	PT-4-402	PT-4-403	PT-4-405		
RCS Wide Range THOT	TI-4-412	TI-4-422	TI-4-432		
RCS Wide Range TCOLD	TI-4-410	TI-4-420	TI-4-430		
RCS Drain Down Level	LIS-4-6421	LI-4-6422	LIS-4-6423		
Equipment Hatch	Open	Closed			
Personnel Hatch	Open	Closed			
Aux Bldg Exhaust Fan	A	B			
Instrument Air CD	3CD	4CD			
Instrument Air Crosstie	Yes	No			
Vital DC Room HVAC	E16D	E16E	E16F		
Service Water Pumps	A	B	C	D	
Reactor Time to Boil	xx	Minutes			
Spent Fuel Pool Time to Boil	xxx	Minutes			

Applicable TCNs

Reason for Reduced Risk

Performed By Reviewed By

Accepted By _____ _____ / _____

Cont Room, OSC, WCC, OSG Date / Time

ATTACHMENT 4
(Page 10 of 11)

OUTAGE RISK ASSESSMENT AND PROTECTED TRAIN POSTING VERIFICATION
PART B - RISK CONTROL

PART B - RISK CONTROL - Enclosure 6

Phase 2, Fuel in Reactor, RCS Temperature < 200 F, At Least Two RCS Loops Available

Status: COLOR

Date: xx/xx/xx Time: xxxx

Designation Shaded = Protected Bold = Running or Energized

Protected Train	4A	4B			
RHR Pumps	4A	4B			
RHR Heat Exchangers	4A	4B			
CCW Pumps	4A	4B	4C		
CCW Heat Exchangers	4A	4B	4C		
ICW Pumps	4A	4B	4C		
ICW Headers	A	B			
Source of Feedwater					
SGFP	4A	4B			
SSGFP	A	B			
Condensate Pump	4A	4B	4C		
Condensate Transfer Pump	Unit 3	Unit 4			
SGWL Pump	4A	4B	4C		
Steam Dump to Atmosphere	CV-4-1606	CV-4-1607	CV-4-1608		
Charging Pumps	4A	4B	4C		
Boration Source	BAST	RWST	Tank Level =		
Primary Water Pumps	4A	4B	3A	3B	
Boric Acid Pumps	4A	4B	3A	3B	
HHSI Pumps	4A	4B	3A	3B	
Offsite Power Source	U4 Startup Xfmr	U4 Aux Xfmr Backfeed	U3 Startup Xfmr	Unit 4 C Bus Xfmr	Unit 3 C Bus Xfmr
4160 Bus	4A	4B	4C	4D	
Emergency Diesels	4A	4B			
Station Blackout Tie	4AD07	3AD07			
Shutdown Boron Concentration Adequate	Yes	No	Actual =	Required =	
Source Range	N-31	N-32	"A" Gamma metrics	"B" Gamma metrics	
ARMS Channels	R1404	R1405	R1406	R1408	R1422
PRMS Channels	R-11	R-12	R-14	R-19	
Two Core Exit Thermocouples	Yes	No			
QSPDS Channel Reactor Vessel HJTC	A	B	Reactor Disassembled		
Containment Water Level	LI-4-6309A	LI-4-6309B			
Containment Sump Level	LI-4-6308A	LI-4-6308B	LT-4-1546		
Pressurizer Level	LT-4-459	LT-4-460	LT-4-461	LT-4-462	
RCS Pressure	PT-4-402	PT-4-403	PT-4-405	-	
RCS Wide Range THOT	TI-4-412	TI-4-422	TI-4-432		
RCS Wide Range TCOLD	TI-4-410	TI-4-420	TI-4-430		
Equipment Hatch	Open	Closed			
Personnel Hatch	Open	Closed			
Aux Bldg Exhaust Fan	A	B			
Instrument Air CD	3CD	4CD			
Instrument Air Crosstie	Yes	No			
Vital DC Room HVAC	E16D	E16E	E16F		
Service Water Pumps	A	B	C	D	
Reactor Time to Boil	xx	Minutes			
Spent Fuel Pool Time to Boil	xxx	Minutes			

Applicable TCNs

Reason for Reduced Risk

Performed By Reviewed By

Accepted By _____ _____/_____
Cont Room, OSC, WCC, OSG Date / Time

ATTACHMENT 4
(Page 11 of 11)

OUTAGE RISK ASSESSMENT AND PROTECTED TRAIN POSTING VERIFICATION
PART B - RISK CONTROL

PART B - RISK CONTROL - Enclosure 7

Spent Fuel Pool Minimum Required Equipment

Status: COLOR

Date: xx/xx/xx Time: xxxx

Designation: Shaded = Protected Bold = Running or Energized

Protected Train	4A	4B			
SFP Cooling Pump	A	B			
ICW Pump	4A	4B	4C		
ICW Header	A	B			
CCW Pump	4A	4B	4C		
CCW Heat Exchanger	4A	4B	4C		
4160 Bus	4A	4B			
SFP Exhaust Fan	On	Off			
Emergency Diesels	4A	4B			
480 Volt LC 4C	Yes	No			
SFP Make-up Water Source	RWST & purification pump	PWST & PW pump	CVCS Hold-up Tank & Recirc Pmp	Tank Level =	
Spent Fuel Pool Time to Boil	XX	Minutes			

Applicable TCNs

Reason for Reduced Risk

Performed By: Reviewed By:

Accepted By: _____ _____/_____
Cont Room, OSC, WCC, OSG Date / Time

ATTACHMENT 5
(Page 1 of 1)

TEMPORARY CHANGE INDEX

TEMPORARY CHANGE INDEX

Number	Key Function	Description	Date Entered	Date Restored

SAMPLE

ATTACHMENT 6
(Page 1 of 2)

APPROVAL OF WORK ON PROTECTED/OPERATING TRAIN

Description of Activity

Justification For Work on Protected/Operating Train (i.e., plant design, emergent condition, etc)

Risk Assessment Team Review

Required equipment will be reduced below the level of Enclosures 1 through 7 (i.e., TCN is required) Yes ☐ No ☐

Required equipment not reduced below the level of Enclosures 1 through 7, but TCN recommended? Yes ☐ No ☐

Additional protected equipment signs or barriers required as a result of the work? If Yes, list specific components/locations. Yes ☐ No ☐

Any additional recommended compensatory actions? If Yes, list below. Yes ☐ No ☐

Recommendation by the Risk Assessment Team: Yes ☐ No ☐ _____
RAT Leader (Ops)

SAMPLE

ATTACHMENT 6
(Page 2 of 2)

APPROVAL OF WORK ON PROTECTED/OPERATING TRAIN

SAMPLE

NOTES

- *Approval by the below individuals must be in a **face to face** or per telecom group discussion.*
- *Delegation of signature authority for the individuals below must be in writing to the Risk Assessment Team Leader. Delegation of that authority is allowable only when the individual is not on site.*
- *Review by the Shift Manager is required prior to performing activity permitted by this attachment.*
- *A copy of this approved attachment shall be in hand at the job site prior to commencing work.*

Approved by: _____
Engineering Manager

Approved by: _____
Work Controls Manager

Approved by: _____
Operations Manager

Approved by: _____
Plant General Manager

Approval Expires: _____
(Date/Time or specific plant condition)

Reviewed by: _____
Shift Manager

Restoration

If additional protected equipment signs and barriers used, verify removed upon completion of activity.

_____
Shift Manager or SRO Designee

ATTACHMENT 7
(Page 1 of 2)

RISK SIGNIFICANT SCHEDULE CHANGE (RSSC)

NOTES

- *Submittal of this form is the responsibility of the department or project lead requesting an R-Logic or potentially risk significant schedule change.*
- *A minor change to a R flagged activity is when NO adverse risk significant change occurs due to the requested change having obvious inconsequential degradation to outage or shutdown safety risk. Review of Enclosures 1 through 7 and 11 should be considered to verify no adverse impact to risk. Ensure the basis is adequately documented.*
- *Complete only Section 1 or 2 as applicable and retain the approved copy in the Outage Risk Assessment Notebook.*
- *A Condition Report must be attached to all Risk Significant Schedule Changes not deemed as minor.*

Section 1: Minor Change Yes ☐ No ☐ (See Section 2)

1. Describe the change:

2. Describe impact or reason determined as minor change:

3. Approval as Minor RSSC

_____ _____
Risk Assessment Team Lead *Date*

4. Schedule changes processed: _____
WC Initials

5. Retain this form in the Outage Risk Assessment Notebook.

SAMPLE

ATTACHMENT 7
(Page 2 of 2)

RISK SIGNIFICANT SCHEDULE CHANGE (RSSC)

SAMPLE

Section 2: Risk Significant Schedule Change Yes ☐ No ☐

1. Describe Risk Significant Schedule Change and Activities:

2. Discuss overall benefits and risk of change in terms of nuclear safety/outage risk including the impact on required equipment in Enclosures 1 through 7.

3. Approval of RSSC: Yes ☐ No ☐

   Remarks: _____

   _____ _____
   Risk Assessment Team Lead *Date*

   _____ _____
   Operations Manager *Date*

   _____ _____
   Plant General Manager *Date*

4. RAT member delineate risk logic ties for the approved change.

5. Schedule changes processed: _____ *WC Initials*

6. WC and/or OCC Outage Managers apprised of changes: _____ *Initials*

7. Document in Condition Report and attach copy of CR.

8. Retain this form in the Outage Risk Assessment Notebook.

ATTACHMENT 8
(Page 1 of 5)

UNIT 3 PROTECTED EQUIPMENT POSTINGS DURING ENCLOSURE 1

NOTES

- *The steps in this attachment may be performed in any order.*
- *Due to the size of the switchyard bay, the size of the area around the transformers, and the size of the area around the CCW Heat Exchangers, those specified postings are not intended to provide a physical barrier, rather, to provide information and heightened awareness.*
- *If the operating train is swapped, or if components within a train are swapped, protected equipment postings should be placed or removed as necessary to maintain the postings and equipment status consistent. The new alignment should be posted prior to deposting the previously protected equipment*

1. **IF** offsite power is from the startup transformer, **THEN** perform the following:

   a. In the switchyard, install barriers around the startup transformer bay as follows:

   ____ (1) Install a barrier on the east side of the bay facing east.

   ____ (2) Install a barrier on the north side facing north.

   ____ (3) Install a barrier on the west side facing west

   ____ (4) Install a barrier on the south side facing south.

   ____ b. At the startup transformer, install barriers around the startup transformer.

2. **IF** offsite power is from backfeed, **THEN** perform the following:

   a. In the switchyard, install barriers around the main transformer bay as follows:

   ____ (1) Install a barrier on the east side of the bay facing east.

   ____ (2) Install a barrier on the north side facing north.

   ____ (3) Install a barrier on the west side facing west

   ____ (4) Install a barrier on the south side facing south.

   ____ b. At the main and aux transformers, install barriers around the main and aux transformers.

ATTACHMENT 8
(Page 2 of 5)

UNIT 3 PROTECTED EQUIPMENT POSTINGS DURING ENCLOSURE 1

3. **IF** 3A Train is the designated operating train, **THEN** post signs and/or barriers as follows:

   a. Install barriers in the 3A 4kv bus room at the following locations:

   _____ (1) East side of the 3A switchgear bus from the north wall to the south wall

   _____ (2) West side of the 3A switchgear bus from the north wall to the south wall (Allow access to LP34.)

   b. Install barriers and sign in the U3 480v load center rooms:

   _____ (1) Install barriers in front of 3A and 3C 480v LCs.

   _____ (2) Install protected equipment signs at their respective undervoltage relay panels located on the south wall of the 480v load center rooms.

   c. Install barriers at the following entry doors to 3A EDG rooms:

   _____ (1) Door 073-1

   _____ (2) Door 072-2

   _____ (3) Door 131-1 to the 3A EDG radiator area

   _____ (4) Door 075-1to the 3A EDG Daytank room

   d. Post 3A MCC 480v MCC Vital Section as follows:

   _____ (1) At 3A 480v MCC Vital Section (east side of Turbine Bldg walkway, immediately above condensate pumps), place magnetic **STOP** signs on each cabinet door of 3A 480v MCC Vital Section (8 signs total).

   _____ (2) At 3A 480v MCC Vital Section (east side of Turbine Bldg walkway, immediately above condensate pumps), place a magnetic **STOP** sign on the north side facing north.

   _____ (3) At 3A 480v MCC Vital Section (east side of Turbine Bldg walkway, immediately above condensate pumps), place a magnetic **STOP** sign on the south side facing south.

   e. **IF** the 3A ICW or CCW pump is unavailable and the 3D bus is aligned to the 3A bus, **THEN** install barriers at the following entry doors to 3D 4kv bus room:

   _____ (1) Door 134-1

   _____ (2) Door 134-2

ATTACHMENT 8
(Page 3 of 5)

UNIT 3 PROTECTED EQUIPMENT POSTINGS DURING ENCLOSURE 1

3. (Cont'd)

f. In the control room, place unique information tags on the following pump control switches identifying them as the protected/operating train:

_____ (1) 3A RHR Pump

(2) Select one: (N/A pump not operating)

_____ i. 3A CCW Pump

OR

_____ ii. 3C CCW Pump

(3) Select one: (N/A pump not operating)

_____ i. 3A ICW Pump

OR

_____ ii. 3C ICW Pump

4. **IF** 3B Train is the designated operating train, **THEN** post signs and/or barriers as follows:

a. Install barriers in the 3B 4kv bus room at the following locations:

_____ (1) East side of the 3B switchgear bus from the north wall to the south wall (Permit access to the ASD panel.)

_____ (2) West side of the 3B switchgear bus from the north wall to the south wall

b. Install barriers and signs in the U3 480v load center rooms:

_____ (1) Install barriers in front of 3B and 3D 480v LCs.

_____ (2) Install protected equipment signs at their respective undervoltage relay panels located on the south wall of the 480v load center rooms.

c. Install barriers at the following entry doors to 3B EDG rooms:

_____ (1) Door 072-1

_____ (2) Door 072-2

_____ (3) Vital area door 3EDG3131 to the 3B EDG radiator area

_____ (4) Door 074-1 to the 3B EDG Daytank room.

ATTACHMENT 8
(Page 4 of 5)

UNIT 3 PROTECTED EQUIPMENT POSTINGS DURING ENCLOSURE 1

4. (Cont'd)

d. **IF** the 3B ICW or CCW pump is unavailable and the 3D bus is aligned to the 3B bus, **THEN** install barriers at the following entry doors to 3D 4kv bus room:

____ (1) Door 134-1

____ (2) Door 134-2

e. In the control room, place unique information tags on the following pump control switches identifying them as the protected/operating train:

____ (1) 3B RHR Pump

(2) Select one: (N/A pump not operating)

____ i. 3B CCW Pump

OR

____ ii. 3C CCW Pump

(3) Select one: (N/A pump not operating)

____ i. 3B ICW Pump

OR

____ ii. 3C ICW Pump

5. In the 3A 4kv bus room, install signs as follows:

____ a. Place a protected equipment sign on the front of 3C23A (Old Sequencer Cabinet) located on the north wall of the 3A 4kv bus room.

NOTE

The C bus tie breaker cubicle contains an HGA relay that if mechanically agitated could cause a bus lockout.

____ b. Place a protected equipment sign on the cubicle door for breaker 3AA09

____ c. Place a protected equipment sign on the 3AA04 cubicle door.

ATTACHMENT 8
(Page 5 of 5)

UNIT 3 PROTECTED EQUIPMENT POSTINGS DURING ENCLOSURE 1

6. In the 3B 4kv bus room, install signs as follows:

_____ a. Place a protected equipment sign on the front of 3C23B (Old Sequencer Cabinet) located on the north wall of the 3B 4kv bus room.

NOTE

The C bus tie breaker cubicle contains an HGA relay that if mechanically agitated could cause a bus lockout.

_____ b. Place a protected equipment sign on the cubicle door for breaker 3AB22

_____ c. Place a protected equipment sign on the 3AB04 cubicle door.

_____ 7. In the CCW room, install barriers around the CCW pump whose 4kv power supply is protected above.

_____ a. Record pump protected _____

_____ 8. Install barriers at the top of stairway to running protected RHR Pump Room (10 ft).

_____ a. Record RHR Pump Room protected _____

_____ 9. Install barriers on the south end of 2 of 3 CCW Hxs.

_____ a. Record Hxs protected _____

_____ 10. At the Intake, install barriers around the ICW pump whose 4kv power supply is protected above.

_____ a. Record pump protected _____

Date/Time Completed:_____/_____

PERFORMED BY (Print)	INITIALS
_____	_____
_____	_____
_____	_____

ATTACHMENT 9
(Page 1 of 4)

UNIT 3 PROTECTED EQUIPMENT POSTINGS DURING ENCLOSURE 2 AND 5 (PRESSURIZER DRAINED <10%)

NOTE

- *The steps in this attachment may be performed in any order.*
- *Due to the size of the switchyard bay, the size of the area around the transformers, and the size of the area around the CCW Heat Exchangers, those specified postings are not intended to provide a physical barrier, rather, to provide information and heightened awareness.*
- *If the operating train is swapped, or if components within a train are swapped, protected equipment postings should be placed or removed as necessary to maintain the postings and equipment status consistent. The new alignment should be posted prior to deposting the previously protected equipment*

1. IF offsite power is from the startup transformer, THEN perform the following:

   a. In the switchyard, install barriers around the startup transformer bay as follows:

   ____ (1) Install a barrier on the east side of the bay facing east.

   ____ (2) Install a barrier on the north side facing north.

   ____ (3) Install a barrier on the west side facing west

   ____ (4) Install a barrier on the south side facing south.

   ____ b. At the startup transformer, install barriers around the startup transformer.

2. IF offsite power is from backfeed, THEN perform the following:

   a. In the switchyard, install barriers around the main transformer bay as follows:

   ____ (1) Install a barrier on the east side of the bay facing east.

   ____ (2) Install a barrier on the north side facing north.

   ____ (3) Install a barrier on the west side facing west

   ____ (4) Install a barrier on the south side facing south.

   ____ b. At the main and aux transformers, install barriers around the main and aux transformers.

ATTACHMENT 9
(Page 2 of 4)

UNIT 3 PROTECTED EQUIPMENT POSTINGS DURING ENCLOSURE 2 AND 5 (PRESSURIZER DRAINED <10%)

3. Install barriers in the 3A 4KV Bus room at the following locations:

_____ a. East side of the 3A switchgear bus from the north wall to the south wall

_____ b. West side of the 3A switchgear bus from the north wall to the south wall (Permit access to LP34.)

4. Install barriers in the 3B 4KV Bus room at the following locations:

_____ a. East side of the 3B switchgear bus from the north wall to the south wall (Permit access to the ASD panel.)

_____ b. West side of the 3B switchgear bus from the north wall to the south wall.

5. Install barriers and signs at the U3 LC rooms:

_____ a. Install barriers in front of 3A, 3B and 3C, 3D 480v LCs.

_____ b. Install protected equipment signs at their respective undervoltage relay panels located on the south wall of the 480v load center rooms.

6. Install barriers at the following entry doors to 3A and 3B EDG rooms:

_____ a. Door 073-1

_____ b. Door 075-1to the 3A EDG Daytank room

_____ c. Door 072-1

_____ d. Vital area door 3EDG3131 to the 3B EDG radiator area

_____ e. Door 074-1 to the 3B EDG Daytank room.

7. Post 3A MCC 480v MCC Vital Section as follows:

_____ a. At 3A 480v MCC Vital Section (east side of Turbine Bldg walkway, immediately above condensate pumps), place magnetic **STOP** signs on each cabinet door of 3A 480v MCC Vital Section (8 signs total).

_____ b. At 3A 480v MCC Vital Section (east side of Turbine Bldg walkway, immediately above condensate pumps), place a magnetic **STOP** sign on the north side facing north.

_____ c. At 3A 480v MCC Vital Section (east side of Turbine Bldg walkway, immediately above condensate pumps), place a magnetic **STOP** sign on the south side facing south.

ATTACHMENT 9
(Page 3 of 4)

UNIT 3 PROTECTED EQUIPMENT POSTINGS DURING ENCLOSURE 2 AND 5 (PRESSURIZER DRAINED <10%)

8. In the 3A 4kv bus room, install signs as follows:

____ a. Place a protected equipment sign on the front of 3C23A (Old Sequencer Cabinet) located on the north wall of the 3A 4kv bus room.

NOTE

The C bus tie breaker cubicle contains an HGA relay that if mechanically agitated could cause a bus lockout.

____ b. Place a protected equipment sign on the cubicle door for breaker 3AA09

____ c. Place a protected equipment sign on the 3AA04 cubicle door.

9. In the 3B 4kv bus room, install signs as follows:

____ a. Place a protected equipment sign on the front of 3C23B (Old Sequencer Cabinet) located on the north wall of the 3B 4kv bus room.

NOTE

The C bus tie breaker cubicle contains an HGA relay that if mechanically agitated could cause a bus lockout.

____ b. Place a protected equipment sign on the cubicle door for breaker 3AB22

____ c. Place a protected equipment sign on the 3AB04 cubicle door.

10. **IF** 3C CCW pump, OR 3C ICW pump, is required to support operability of either RHR train (i.e., any A or B ICW/CCW pump is unavailable), **THEN** install barriers at the following entry doors to 3D 4kv bus room:

____ a. Door 134-1

____ b. Door 134-2

____ 11. In the CCW room, install barriers around the CCW pumps whose 4kv power supplies were protected above.

____ a. Record pumps protected _____

____ 12. Install barriers at the top of stairway to the 3A RHR Pump Room (10 ft).

____ 13. Install barriers at the top of stairway to the 3B RHR Pump Room (10 ft).

ATTACHMENT 9
(Page 4 of 4)

UNIT 3 PROTECTED EQUIPMENT POSTINGS DURING ENCLOSURE 2 AND 5 (PRESSURIZER DRAINED <10%)

_____ 14. Install barriers on the south end of 2 of 3 CCW Hxs.

_____ a. Record Hxs protected _____

_____ 15. At the Intake, install barriers around the ICW pumps whose 4kv power supplies were protected above.

_____ a. Record pumps protected _____

16. In the control room, place unique information tags on the following Pump control switches identifying them as the protected/operating Train: (N/A pumps not operating)

_____ a. 3A RHR Pump

_____ b. 3B RHR Pump

_____ c. 3A CCW Pump

_____ d. 3B CCW Pump

_____ e. 3C CCW Pump

_____ f. 3A ICW Pump

_____ g. 3B ICW Pump

_____ h. 3C ICW Pump

_____ i. Record operating train _____

Date/Time Completed:_____/_____

PERFORMED BY (Print)	INITIALS
_____	_____
_____	_____
_____	_____

ATTACHMENT 10
(Page 1 of 7)

UNIT 3 PROTECTED EQUIPMENT POSTINGS DURING ENCLOSURE 3 AND 4 CAVITY FLOODED >23' ABOVE THE VESSEL FLANGE

NOTES

- *The steps in this attachment may be performed in any order.*
- *Due to the size of the switchyard bay, the size of the area around the transformers, and the size of the area around the CCW Heat Exchangers, those specified postings are not intended to provide a physical barrier, rather, to provide information and heightened awareness.*
- *If the operating train is swapped, or if components within a train are swapped, protected equipment postings should be placed or removed as necessary to maintain the postings and equipment status consistent. The new alignment should be posted prior to deposting the previously protected equipment*

1. **IF** offsite power is from the startup transformer, **THEN** perform the following:

   a. In the switchyard, install barriers around the startup transformer bay as follows:

   ____ (1) Install a barrier on the east side of the bay facing east.

   ____ (2) Install a barrier on the north side facing north.

   ____ (3) Install a barrier on the west side facing west

   ____ (4) Install a barrier on the south side facing south.

   ____ b. At the startup transformer, install barriers around the startup transformer.

2. **IF** offsite power is from backfeed, **THEN** perform the following:

   a. In the switchyard, install barriers around the main transformer bay as follows:

   ____ (1) Install a barrier on the east side of the bay facing east.

   ____ (2) Install a barrier on the north side facing north.

   ____ (3) Install a barrier on the west side facing west

   ____ (4) Install a barrier on the south side facing south.

   ____ b. At the main and aux transformers, install barriers around the main and aux transformers.

ATTACHMENT 10
(Page 2 of 7)

UNIT 3 PROTECTED EQUIPMENT POSTINGS DURING ENCLOSURE 3 AND 4 CAVITY FLOODED >23' ABOVE THE VESSEL FLANGE

3. **IF** 3A Train is the designated operating train, **THEN** post signs and/or barriers as follows:

   a. Install barriers in the 3A 4kv bus room at the following locations:

   _____ (1) East side of the 3A switchgear bus from the north wall to the south wall

   _____ (2) West side of the 3A switchgear bus from the north wall to the south wall (Allow access to LP34.)

   b. In the 3A 4kv bus room, install signs as follows:

   _____ (1) Place a protected equipment sign on the front of 3C23A (Old Sequencer Cabinet) located on the north wall of the 3A 4kv bus room.

NOTE

The C bus tie breaker cubicle contains an HGA relay that if mechanically agitated could cause a bus lockout.

   _____ (2) Place a protected equipment sign on the cubicle door for breaker 3AA09

   _____ (3) Place a protected equipment sign on the 3AA04 cubicle door.

   _____ c. In the 3B 4kv bus room, place a protected equipment sign on the 3AB04 cubicle door.

   d. **IF** the 480v LCs are split, **THEN:**

   _____ (1) Install barriers in front of 3A and 3C 480v LCs.

   _____ (2) Install protected equipment signs at their respective undervoltage relay panels located on the south wall of the 480v load center rooms.

   e. Install barriers at the following entry doors to 3A EDG rooms:

   _____ (1) Door 073-1

   _____ (2) Door 072-2

   _____ (3) Door 131-1 to the 3A EDG radiator area

   _____ (4) Door 075-1 to the 3A EDG Daytank room

ATTACHMENT 10
(Page 3 of 7)

UNIT 3 PROTECTED EQUIPMENT POSTINGS DURING ENCLOSURE 3 AND 4 CAVITY FLOODED >23' ABOVE THE VESSEL FLANGE

3. (Cont'd)

f. Post 3A MCC 480v MCC Vital Section as follows:

____ (1) At 3A 480v MCC Vital Section (east side of Turbine Bldg walkway, immediately above condensate pumps), place magnetic **STOP** signs on each cabinet door of 3A 480v MCC Vital Section (8 signs total).

____ (2) At 3A 480v MCC Vital Section (east side of Turbine Bldg walkway, immediately above condensate pumps), place a magnetic **STOP** sign on the north side facing north.

____ (3) At 3A 480v MCC Vital Section (east side of Turbine Bldg walkway, immediately above condensate pumps), place a magnetic **STOP** sign on the south side facing south.

g. **IF** the 3A ICW or CCW pump is unavailable and the 3D bus is aligned to the 3A bus, **THEN** install barriers at the following entry doors to 3D 4kv bus room:

____ (1) Door 134-1

____ (2) Door 134-2

____ h. Install barriers at the top of stairway to the 3A RHR Pump Room (10 ft).

i. In the Control Room, place unique information tags on the following pump control switches identifying them as the protected/operating train:

____ (1) 3A RHR Pump

(2) Select one: (N/A pump not operating)

____ i. 3A CCW Pump

OR

____ ii. 3C CCW Pump

(3) Select one: (N/A pump not operating)

____ i. 3A ICW Pump

OR

____ ii. 3C ICW Pump

ATTACHMENT 10
(Page 4 of 7)

UNIT 3 PROTECTED EQUIPMENT POSTINGS DURING ENCLOSURE 3 AND 4 CAVITY FLOODED >23' ABOVE THE VESSEL FLANGE

4. **IF** 3B Train is the designated operating train, **THEN** post signs and/or barriers as follows:

   a. Install barriers in the 3B 4kv bus room at the following locations:

   _____ (1) East side of the 3B switchgear bus from the north wall to the south wall (Permit access to the ASD panel.)

   _____ (2) West side of the 3B switchgear bus from the north wall to the south wall

   b. In the 3B 4kv bus room, install signs as follows:

   _____ (1) Place a protected equipment sign on the front of 3C23B (Old Sequencer Cabinet) located on the north wall of the 3B 4kv bus room.

NOTE

The C bus tie breaker cubicle contains an HGA relay that if mechanically agitated could cause a bus lockout.

   _____ (2) Place a protected equipment sign on the cubicle door for breaker 3AB22

   _____ (3) Place a protected equipment sign on the 3AB04 cubicle door.

   c. **IF** the 480v LCs are split, **THEN:**

   _____ (1) Install barriers in front of 3B and 3D 480v LCs.

   _____ (2) Install protected equipment signs at their respective undervoltage relay panels located on the south wall of the 480v load center rooms.

   d. Install barriers at the following entry doors to 3B EDG rooms:

   _____ (1) Door 072-1

   _____ (2) Door 072-2

   _____ (3) Vital area door 3EDG3131 to the 3B EDG radiator area

   _____ (4) Door 074-1 to the 3B EDG Daytank room.

   e. **IF** 3B ICW or CCW pump is unavailable and the 3D bus is aligned to the 3B bus, **THEN** install barriers at the following entry doors to 3D 4kv bus room:

   _____ (1) Door 134-1

   _____ (2) Door 134-2

ATTACHMENT 10
(Page 5 of 7)

UNIT 3 PROTECTED EQUIPMENT POSTINGS DURING ENCLOSURE 3 AND 4 CAVITY FLOODED >23' ABOVE THE VESSEL FLANGE

4. (Cont'd)

f. **IF** the reactor core is less than fully loaded, **THEN** perform the following:

(1) **IF** 3C 480v LC is fed from 3A 4kv bus, then post signs and/or barriers as follows:

a) Install barriers in the 3A 4KV Bus room at the following locations:

____ 1) East side of the 3A switchgear bus from the north wall to the south wall

____ 2) West side of the 3A switchgear bus from the north wall to the south wall (Allow access to LP34.)

b) In the 3A 4kv bus room, install signs as follows:

____ 1) Place a protected equipment sign on the front of 3C23A (Old Sequencer Cabinet) located on the north wall of the 3A 4kv bus room.

NOTE

The C bus tie breaker cubicle contains an HGA relay that if mechanically agitated could cause a bus lockout.

____ 2) Place a protected equipment sign on the cubicle door for breaker 3AA09

c) Install barriers at the Unit 3 480v load center rooms:

____ 1) Install barriers in front of 3A and 3C 480v LCs.

____ 2) Install protected equipment signs at their respective undervoltage relay panels located on the south wall of the 480v load center rooms.

d) Install barriers at the following entry doors to 3A EDG rooms:

____ 1) Door 073-1

____ 2) Door 075-1 to the 3A EDG Daytank room

____ g. In the 3A 4kv bus room, place a protected equipment sign on the 3AA04 cubicle door.

____ h. Install barriers at the top of stairway to the 3B RHR Pump Room (10 ft).

ATTACHMENT 10
(Page 6 of 7)

UNIT 3 PROTECTED EQUIPMENT POSTINGS DURING ENCLOSURE 3 AND 4 CAVITY FLOODED >23' ABOVE THE VESSEL FLANGE

4. (Cont'd)

i. In the Control Room, place unique information tags on the following pump control switches identifying them as the protected/operating train:

____ (1) 3B RHR Pump

(2) Select one: (N/A pump not operating)

____ i. 3B CCW Pump

OR

____ ii. 3C CCW Pump

(3) Select one: (N/A pump not operating)

____ i. 3B ICW Pump

OR

____ ii. 3C ICW Pump

5. **IF** the 480v LCs are cross-tied, **THEN** post signs and/or barriers as follows:

a. Install barriers and signs at the following locations in Unit 3 480v load center rooms:

____ (1) Install barriers in front of 3A, 3B and 3C, 3D 480v LCs.

____ (2) Install protected equipment signs at their respective undervoltage relay panels located on the south wall of the 480v load center rooms.

____ 6. In the CCW room, install barriers around the CCW pump whose 4kv power supply is protected above.

____ a. Record pump protected _____

____ 7. Install barriers on the south end of 2 of 3 CCW Hxs.

____ a. Record Hxs protected _____

8. **IF** the reactor core is less than fully loaded, **THEN** perform the following:

____ a. Install a barrier at the SFP Pump and Hx Room entry door.

____ b. Install a barrier at the SFP Cooling Heat Exchanger.

____ c. Place a magnetic stop sign on 480 V LC Breaker Cubicle 30309, SFP Cooling Pump (3P212 A/B).

ATTACHMENT 10
(Page 7 of 7)

UNIT 3 PROTECTED EQUIPMENT POSTINGS DURING ENCLOSURE 3 AND 4 CAVITY FLOODED >23' ABOVE THE VESSEL FLANGE

____ 9. At the Intake, install barriers around the ICW pump whose 4kv power supply is protected above.

____ a. Record pump protected _____

____ 10. **IF** offsite power is from backfeed, **THEN** place a protected equipment sign at the safeguards racks to protect the Aux Transformer breaker.

a. 3QR42

b. 3QR43

c. 3QR44

d. 3QR45

Date/Time Completed:_____/_____

PERFORMED BY (Print)	INITIALS
_____	_____
_____	_____
_____	_____

ATTACHMENT 11
(Page 1 of 6)

UNIT 3 PROTECTED EQUIPMENT POSTINGS DURING ENCLOSURE 5 (PRESSURIZER FILLED >10%)

NOTES

- *The steps in this attachment may be performed in any order.*
- *Due to the size of the switchyard bay, the size of the area around the transformers, and the size of the area around the CCW Heat Exchangers, those specified postings are not intended to provide a physical barrier, rather, to provide information and heightened awareness.*
- *If the operating train is swapped, or if components within a train are swapped, protected equipment postings should be placed or removed as necessary to maintain the postings and equipment status consistent. The new alignment should be posted prior to deposting the previously protected equipment.*

1. **IF** offsite power is from the startup transformer, **THEN** perform the following:

   a. In the switchyard, install barriers around the startup transformer bay as follows:

   _____ (1) Install a barrier on the east side of the bay facing east.

   _____ (2) Install a barrier on the north side facing north.

   _____ (3) Install a barrier on the west side facing west

   _____ (4) Install a barrier on the south side facing south.

   _____ b. At the startup transformer, install barriers around the startup transformer.

2. **IF** offsite power is from backfeed, **THEN** perform the following:

   a. In the switchyard, install barriers around the main transformer bay as follows:

   _____ (1) Install a barrier on the east side of the bay facing east.

   _____ (2) Install a barrier on the north side facing north.

   _____ (3) Install a barrier on the west side facing west

   _____ (4) Install a barrier on the south side facing south.

   _____ b. At the main and aux transformers, install barriers around the main and aux transformers.

ATTACHMENT 11
(Page 2 of 6)

UNIT 3 PROTECTED EQUIPMENT POSTINGS DURING ENCLOSURE 5 (PRESSURIZER FILLED >10%)

3. **IF** 3A Train is the designated operating train, **THEN** post signs and/or barriers as follows:

   a. Install barriers in the 3A 4kv bus room at the following locations:

   _____ (1) East side of the 3A switchgear bus from the north wall to the south wall

   _____ (2) West side of the 3A switchgear bus from the north wall to the south wall (Permit access to LP34.)

   b. In the 3A 4kv bus room, install signs as follows:

   _____ (1) Place a protected equipment sign on the front of 3C23A (Old Sequencer Cabinet) located on the north wall of the 3A 4kv bus room.

NOTE

The C bus tie breaker cubicle contains an HGA relay that if mechanically agitated could cause a bus lockout.

   _____ (2) Place a protected equipment sign on the cubicle door for breaker 3AA09

   _____ (3) Place a protected equipment sign on the 3AA04 cubicle door.

   c. Install barriers and signs at the U3 480v load center rooms:

   _____ (1) Install barriers in front of 3A and 3C 480v LCs.

   _____ (2) Install protected equipment signs at their respective undervoltage relay panels located on the south wall of the 480v load center rooms.

   d. Install barriers at the following entry doors to 3A EDG rooms:

   _____ (1) Door 073-1

   _____ (2) Door 072-2

   _____ (3) Door 131-1 to the 3A EDG radiator area

   _____ (4) Door 075-1 to the 3A EDG Daytank room

ATTACHMENT 11
(Page 3 of 6)

UNIT 3 PROTECTED EQUIPMENT POSTINGS DURING ENCLOSURE 5 (PRESSURIZER FILLED >10%)

3 (Cont'd)

e. Post 3A MCC 480v MCC Vital Section as follows:

_____ (1) At 3A 480v MCC Vital Section (east side of Turbine Bldg walkway, immediately above condensate pumps), place magnetic **STOP** signs on each cabinet door of 3A 480v MCC Vital Section (8 signs total).

_____ (2) At 3A 480v MCC Vital Section (east side of Turbine Bldg walkway, immediately above condensate pumps), place a magnetic **STOP** sign on the north side facing north.

_____ (3) At 3A 480v MCC Vital Section (east side of Turbine Bldg walkway, immediately above condensate pumps), place a magnetic **STOP** sign on the south side facing south.

_____ f. Install barriers at top of stairway to the 3A RHR Pump Room (10 ft).

g. In the control room, place unique information tags on the following pump control switches identifying them as the protected/operating train:

_____ (1) 3A RHR Pump

(2) Select one: (N/A pump not operating)

_____ i. 3A CCW Pump

OR

_____ ii. 3C CCW Pump

(3) Select one: (N/A pump not operating)

_____ i. 3A ICW Pump

OR

_____ ii. 3C ICW Pump

ATTACHMENT 11
(Page 4 of 6)

UNIT 3 PROTECTED EQUIPMENT POSTINGS DURING ENCLOSURE 5 (PRESSURIZER FILLED >10%)

4. **IF** 3B Train is the designated operating train, **THEN** post signs and/or barriers as follows:

   a. Install barriers in the 3B 4kv bus room at the following locations:

   ____ (1) East side of the 3B switchgear bus from the north wall to the south wall (Permit access to the ASD panel.)

   ____ (2) West side of the 3B switchgear bus from the north wall to the south wall

   b. In the 3B 4kv bus room, install signs as follows:

   ____ (1) Place a protected equipment sign on the front of 3C23B (Old Sequencer Cabinet) located on the north wall of the 3B 4kv bus room.

> **NOTE**
>
> *The C bus tie breaker cubicle contains an HGA relay that if mechanically agitated could cause a bus lockout.*

   ____ (2) Place a protected equipment sign on the cubicle door for breaker 3AB22

   ____ (3) Place a protected equipment sign on the 3AB04 cubicle door.

   c. Install barriers and signs in the U3 480v load center rooms as follows:

   ____ (1) Install barriers in front of 3B and 3D 480v LCs.

   ____ (2) Install protected equipment signs at their respective undervoltage relay panels located on the south wall of the 480v load center rooms.

   d. Install barriers at the following entry doors to 3B EDG rooms:

   ____ (1) Door 072-1

   ____ (2) Door 072-2

   ____ (3) Vital area door 3EDG3131 to the 3B EDG radiator area

   ____ (4) Door 074-1 to the 3B EDG Daytank room.

   ____ e. Install barriers at top of stairway to the 3B RHR Pump Room (10 ft).

ATTACHMENT 11
(Page 5of 6)

UNIT 3 PROTECTED EQUIPMENT POSTINGS DURING ENCLOSURE 5 (PRESSURIZER FILLED >10%)

4. (Cont'd)

f. In the control room, place unique information tags on the following pump control switches identifying them as the protected/operating train:

_____ (1) 3B RHR Pump

(2) Select one: (N/A pump not operating)

_____ i. 3B CCW Pump

OR

_____ ii. 3C CCW Pump

(3) Select one: (N/A pump not operating)

_____ i. 3B ICW Pump

OR

_____ ii. 3C ICW Pump

_____ 5. **IF** the 3C CCW or ICW pump is running and required for operability of the protected RHR train, **THEN** install barriers at the following entry doors to the 3D 4kv bus room.

a. Door 134-1

b. Door 134-2

ATTACHMENT 11
(Page 6 of 6)

UNIT 3 PROTECTED EQUIPMENT POSTINGS DURING ENCLOSURE 5 (PRESSURIZER FILLED >10%)

_____ 6. In the CCW room, install barriers around the CCW pump whose 4kv power supply is protected above.

_____ a. Record pump protected _____

_____ 7. Install barriers on the south end of 2 of 3 CCW Hxs.

_____ a. Record Hxs protected _____

_____ 8. At the intake, install barriers around the ICW pump whose 4kv power supply is protected above.

_____ a. Record pump protected _____

Date/Time Completed:_____/_____

PERFORMED BY (Print)	INITIALS
_____	_____
_____	_____
_____	_____

ATTACHMENT 12
(Page 1 of 5)

UNIT 3 PROTECTED EQUIPMENT POSTINGS DURING ENCLOSURE 6

NOTES

- *The steps in this attachment may be performed in any order.*
- *Due to the size of the switchyard bay, the size of the area around the transformers, and the size of the area around the CCW Heat Exchangers, those specified postings are not intended to provide a physical barrier, rather, to provide information and heightened awareness.*
- *If the operating train is swapped, or if components within a train are swapped, protected equipment postings should be placed or removed as necessary to maintain the postings and equipment status consistent. The new alignment should be posted prior to deposting the previously protected equipment.*

1. **IF** offsite power is from the startup transformer, **THEN** perform the following:

   a. In the switchyard, install barriers around the startup transformer bay as follows:

   ____ (1) Install a barrier on the east side of the bay facing east.

   ____ (2) Install a barrier on the north side facing north.

   ____ (3) Install a barrier on the west side facing west

   ____ (4) Install a barrier on the south side facing south.

   ____ b. At the startup transformer, install barriers around the startup transformer.

2. **IF** offsite power is from backfeed, **THEN** perform the following:

   a. In the switchyard, install barriers around the main transformer bay as follows:

   ____ (1) Install a barrier on the east side of the bay facing east.

   ____ (2) Install a barrier on the north side facing north.

   ____ (3) Install a barrier on the west side facing west

   ____ (4) Install a barrier on the south side facing south.

   ____ b. At the main and aux transformers, install barriers around the main and aux transformers.

ATTACHMENT 12
(Page 2 of 5)

UNIT 3 PROTECTED EQUIPMENT POSTINGS DURING ENCLOSURE 6

3. **IF** 3A Train is the designated operating train, **THEN** post signs and/or barriers as follows:

   a. Install barriers in the 3A 4kv bus room at the following locations:

   _____ (1) East side of the 3A switchgear bus from the north wall to the south wall

   _____ (2) West side of the 3A switchgear bus from the north wall to the south wall (Permit access to LP34.)

   b. In the 3A 4kv bus room, install signs as follows:

   _____ (1) Place a protected equipment sign on the front of 3C23A (Old Sequencer Cabinet) located on the north wall of the 3A 4kv bus room.

NOTE

The C bus tie breaker cubicle contains an HGA relay that if mechanically agitated could cause a bus lockout.

   _____ (2) Place a protected equipment sign on the cubicle door for breaker 3AA09

   _____ (3) Place a protected equipment sign on the 3AA04 cubicle door.

   c. Install barriers and signs in the U3 480v load center rooms as follows:

   _____ (1) Install barriers in front of 3A and 3C 480v LCs.

   _____ (2) Install protected equipment signs at their respective undervoltage relay panels located on the south wall of the 480v load center rooms.

   d. Install barriers at the following entry doors to 3A EDG rooms:

   _____ (1) Door 073-1

   _____ (2) Door 072-2

   _____ (3) Door 131-1 to the 3A EDG radiator area

   _____ (4) Door 075-1to the 3A EDG Daytank room

   e. Post 3A MCC 480v MCC Vital Section as follows:

   _____ (1) At 3A 480v MCC Vital Section (east side of Turbine Bldg walkway, immediately above condensate pumps), place magnetic **STOP** signs on each cabinet door of 3A 480v MCC Vital Section (8 signs total).

   _____ (2) At 3A 480v MCC Vital Section (east side of Turbine Bldg walkway, immediately above condensate pumps), place a magnetic **STOP** sign on the north side facing north.

   _____ (3) At 3A 480v MCC Vital Section (east side of Turbine Bldg walkway, immediately above condensate pumps), place a magnetic **STOP** sign on the south side facing south.

ATTACHMENT 12
(Page 3 of 5)

UNIT 3 PROTECTED EQUIPMENT POSTINGS DURING ENCLOSURE 6

3. (Cont'd)

f. **IF** the 3A ICW or CCW pump is unavailable and the 3D bus is aligned to the 3A bus, **THEN** install barriers at the following entry doors to 3D 4kv bus room:

____ (1) Door 134-1

____ (2) Door 134-2

g. In the control room, place unique information tags on the following pump control switches identifying them as the protected/operating train:

____ (1) 3A RHR Pump

(2) Select one: (N/A pump not operating)

____ i. 3A CCW Pump

OR

____ ii. 3C CCW Pump

(3) Select one: (N/A pump not operating)

____ i. 3A ICW Pump

OR

____ ii. 3C ICW Pump

4. **IF** 3B Train is the designated operating train, **THEN** post signs and/or barriers as follows:

a. Install barriers in the 3B 4kv bus room at the following locations:

____ (1) East side of the 3B switchgear bus from the north wall to the south wall (Permit access to the ASD panel.)

____ (2) West side of the 3B switchgear bus from the north wall to the south wall

b. In the 3B 4kv bus room, install signs as follows:

____ (1) Place a protected equipment sign on the front of 3C23B (Old Sequencer Cabinet) located on the north wall of the 3B 4kv bus room.

ATTACHMENT 12
(Page 4 of 5)

UNIT 3 PROTECTED EQUIPMENT POSTINGS DURING ENCLOSURE 6

4.b. (Cont'd)

NOTE

The C bus tie breaker cubicle contains an HGA relay that if mechanically agitated could cause a bus lockout.

____ (2) Place a protected equipment sign on the cubicle door for breaker 3AB22

____ (3) Place a protected equipment sign on the 3AB04 cubicle door.

c. Install barriers and signs in the U3 480v load center rooms:

____ (1) Install barriers in front of 3B and 3D 480v LCs.

____ (2) Install protected equipment signs at their respective undervoltage relay panels located on the south wall of the 480v load center rooms.

d. Install barriers at the following entry doors to 3B EDG rooms:

____ (1) Door 072-1

____ (2) Door 072-2

____ (3) Vital area door 3EDG3131 to the 3B EDG radiator area

____ (4) Door 074-1 to the 3B EDG Daytank room.

e. **IF** the 3B ICW or CCW pump is unavailable and the 3D bus is aligned to the 3B bus, **THEN** install barriers at the following entry doors to 3D 4kv bus room:

____ (1) Door 134-1

____ (2) Door 134-2

f. In the control room, place unique information tags on the following pump control switches identifying them as the protected/operating train:

____ (1) 3B RHR Pump

(2) Select one: (N/A pump not operating)

____ i. 3B CCW Pump

OR

____ ii. 3C CCW Pump

ATTACHMENT 12
(Page 5 of 5)

UNIT 3 PROTECTED EQUIPMENT POSTINGS DURING ENCLOSURE 6

4.f. (Cont'd)

(3) Select one: (N/A pump not operating)

____ i. 3B ICW Pump

OR

____ ii. 3C ICW Pump

____ 5. In the CCW room, install barriers around the CCW pump whose 4kv power supply is protected above.

____ a. Record pump protected _____

____ 6. Install barriers at the top of the stairway to the running protected RHR pump room (10 ft).

____ a. Record RHR Pump Room protected _____

____ 7 Install barriers on the south end of 2 of 3 CCW Hxs.

____ a. Record Hxs protected _____

____ 8 At the Intake, install barriers around the ICW pump whose 4kv power supply is protected above.

____ a. Record pump protected _____

Date/Time Completed:_____/_____

PERFORMED BY (Print)	INITIALS
_____	_____
_____	_____
_____	_____

ATTACHMENT 13
(Page 1 of 6)

UNIT 3 PROTECTED EQUIPMENT POSTINGS DURING ENCLOSURE 7 RCS DEFUELED

NOTE

- *The steps in this attachment may be performed in any order.*
- *Due to the size of the switchyard bay, the size of the area around the transformers, and the size of the area around the CCW Heat Exchangers, those specified postings are not intended to provide a physical barrier, rather, to provide information and heightened awareness.*
- *If the operating train is swapped, or if components within a train are swapped, protected equipment postings should be placed or removed as necessary to maintain the postings and equipment status consistent. The new alignment should be posted prior to deposting the previously protected equipment.*

1. **IF** offsite power is from the startup transformer, **THEN** perform the following:

   a. In the switchyard, install barriers around the startup transformer bay as follows:

   ____ (1) Install a barrier on the east side of the bay facing east.

   ____ (2) Install a barrier on the north side facing north.

   ____ (3) Install a barrier on the west side facing west

   ____ (4) Install a barrier on the south side facing south.

   ____ b. At the startup transformer, install barriers around the startup transformer.

2. **IF** offsite power is from backfeed, **THEN** perform the following:

   a. In the switchyard, install barriers around the main transformer bay as follows:

   ____ (1) Install a barrier on the east side of the bay facing east.

   ____ (2) Install a barrier on the north side facing north.

   ____ (3) Install a barrier on the west side facing west

   ____ (4) Install a barrier on the south side facing south.

   ____ b. At the main and aux transformers, install barriers around the main and aux transformers.

ATTACHMENT 13
(Page 2 of 6)

UNIT 3 PROTECTED EQUIPMENT POSTINGS DURING ENCLOSURE 7 RCS DEFUELED

3. **IF** 3C 480v LC is fed from 3A 4kv bus, **THEN** post signs and/or barriers as follows:

   a. Install barriers in the 3A switchgear bus room at the following locations:

   ____ (1) East side of the 3A switchgear bus from the north wall to the south wall

   ____ (2) West side of the 3A switchgear bus from the north wall to the south wall (Permit access to LP34.)

   b. In the 3A 4kv bus room, install signs as follows:

   ____ (1) Place a protected equipment sign on the front of 3C23A (Old Sequencer Cabinet) located on the north wall of the 3A 4kv bus room.

NOTE

The C bus tie breaker cubicle contains an HGA relay that if mechanically agitated could cause a bus lockout.

   ____ (2) Place a protected equipment sign on the cubicle door for breaker 3AA09.

   ____ (3) Place a protected equipment sign on the 3AA04 cubicle door.

   ____ c. In the 3B 4kv Bus Room, place a Protected Equipment sign on the 3AB04 Cubicle Door.

   d. Install barriers and signs in the U3 480v load center rooms as follows:

   ____ (1) Install barriers in front of 3A and 3C 480v LCs.

   ____ (2) Install protected equipment signs at their respective undervoltage relay panels located on the south wall of the 480v load center rooms.

   ____ (3) If load centers are cross-tied, then install barriers in front of 3B and 3D 480v LCs.

   ____ e. Place a magnetic stop sign on the 480V LC Breaker Cubicle 30309, SFP Cooling Pump (3P212A/B).

   f. Install barriers at the following entry doors to 3A EDG rooms:

   ____ (1) Door 073-1

   ____ (2) Door 072-2

   ____ (3) Door 131-1 to the 3A EDG radiator area

   ____ (4) Door 075-1to the 3A EDG Daytank room

ATTACHMENT 13
(Page 3 of 6)

UNIT 3 PROTECTED EQUIPMENT POSTINGS DURING ENCLOSURE 7 RCS DEFUELED

3. (Cont'd)

g. Post 3A MCC 480v MCC Vital Section as follows:

_____ (1) At 3A 480v MCC Vital Section (east side of Turbine Bldg walkway, immediately above condensate pumps), place magnetic **STOP** signs on each cabinet door of 3A 480v MCC Vital Section (8 signs total).

_____ (2) At 3A 480v MCC Vital Section (east side of Turbine Bldg walkway, immediately above condensate pumps), place a magnetic **STOP** sign on the north side facing north.

_____ (3) At 3A 480v MCC Vital Section (east side of Turbine Bldg walkway, immediately above condensate pumps), place a magnetic **STOP** sign on the south side facing south.

h. **IF** the 3A ICW or CCW pump is unavailable and the 3D bus is aligned to the 3A bus, **THEN** install barriers at the following entry doors to 3D 4kv bus room:

_____ (1) Door 134-1

_____ (2) Door 134-2

i. In the control room, place unique information tags on the following pump control switches identifying them as the protected/operating train:

(1) Select one: (N/A pump not operating)

_____ i. 3A CCW Pump

OR

_____ ii. 3C CCW Pump

(2) Select one: (N/A pump not operating)

_____ i. 3A ICW Pump

OR

_____ ii. 3C ICW Pump

ATTACHMENT 13
(Page 4 of 6)

UNIT 3 PROTECTED EQUIPMENT POSTINGS DURING ENCLOSURE 7 RCS DEFUELED

4. **IF** 3C 480v LC is fed from 3D LC, **THEN** post signs and/or barriers as follows:

   a. Install barriers in the 3B 4KV Bus room at the following locations:

   ____ (1) East side of the 3B switchgear bus from the north wall to the south wall (Permit access to the ASD panel.)

   ____ (2) West side of the 3B switchgear bus from the north wall to the south wall

   b. In the 3B 4kv bus room, install signs as follows:

   ____ (1) Place a protected equipment sign on the front of 3C23B (Old Sequencer Cabinet) located on the north wall of the 3B 4kv bus room.

NOTE

The C bus tie breaker cubicle contains an HGA relay that if mechanically agitated could cause a bus lockout.

   ____ (2) Place a protected equipment sign on the cubicle door for breaker 3AB22

   ____ (3) Place a protected equipment sign on the 3AB04 cubicle door.

   ____ c. In the 3A 4kv Bus Room, place a Protected Equipment sign on the 3AA04 Cubicle Door.

   d. Install barriers and signs in the U3 480v load center rooms:

   ____ (1) Install barriers in front of 3A, 3B, and 3C, 3D 480v LCs.

   ____ (2) Install protected equipment signs at their respective undervoltage relay panels located on the south wall of the 480v load center rooms.

   ____ e. Place a magnetic stop sign on the 480V LC Breaker Cubicle 30309, SFP Cooling Pump (3P212A/B).

   f. Install barriers at the following entry doors to 3B EDG rooms:

   ____ (1) Door 072-1

   ____ (2) Door 072-2

   ____ (3) Vital area door 3EDG3131 to the 3B EDG radiator area

   ____ (4) Door 074-1 to the 3B EDG Daytank room.

ATTACHMENT 13
(Page 5 of 6)

UNIT 3 PROTECTED EQUIPMENT POSTINGS DURING ENCLOSURE 7 RCS DEFUELED

4. (Cont'd)

g. **IF** 3B ICW or CCW pump is unavailable and the 3D bus is aligned to the 3B bus, **THEN** install barriers at the following entry doors to 3D 4kv bus room:

____ (1) Door 134-1

____ (2) Door 134-2

h. In the control room, place unique information tags on the following pump control switches identifying them as the protected/operating train:

(1) Select one: (N/A pump not operating)

____ i. 3B CCW Pump

OR

____ ii. 3C CCW Pump

(2) Select one: (N/A pump not operating)

____ i. 3B ICW Pump

OR

____ ii. 3C ICW Pump

____ 5. In the CCW room, install barriers around the CCW pump whose 4kv power supply is protected above.

____ a. Record pump protected _____

____ 6. Install barriers on the south end of 1 of 3 CCW Hxs.

____ a. Record Hxs protected _____

ATTACHMENT 13
(Page 6 of 6)

UNIT 3 PROTECTED EQUIPMENT POSTINGS DURING ENCLOSURE 7 RCS DEFUELED

_____ 7. At the SFP pump and Hx room, install a barrier at the entry door.

_____ 8. At the Intake, install barriers around the ICW pump whose 4kv power supply is protected above.

_____ a. Record pump protected _____

_____ 9. **IF** offsite power is from backfeed, **THEN** place a protected equipment sign at the safeguards racks to protect the Aux Transformer breaker.

a. 3QR42

b. 3QR43

c. 3QR44

d. 3QR45

Date/Time Completed:_____/_____

PERFORMED BY (Print)	INITIALS
_____	_____
_____	_____
_____	_____

ATTACHMENT 14
(Page 1 of 6)

UNIT 4 PROTECTED EQUIPMENT POSTINGS DURING ENCLOSURE 1

NOTES

- *The steps in this attachment may be performed in any order.*
- *Due to the size of the switchyard bay, the size of the area around the transformers, and the size of the area around the CCW Heat Exchangers, those specified postings are not intended to provide a physical barrier, rather, to provide information and heightened awareness.*
- *If the operating train is swapped, or if components within a train are swapped, protected equipment postings should be placed or removed as necessary to maintain the postings and equipment status consistent. The new alignment should be posted prior to deposting the previously protected equipment.*

1. **IF** offsite power is from the startup transformer, **THEN** perform the following:

   a. In the switchyard, install barriers around the startup transformer bay as follows:

   ____ (1) Install a barrier on the east side of the bay facing east.

   ____ (2) Install a barrier on the north side facing north.

   ____ (3) Install a barrier on the west side facing west

   ____ (4) Install a barrier on the south side facing south.

   ____ b. At the startup transformer, install barriers around the startup transformer.

2. **IF** offsite power is from backfeed, **THEN** perform the following:

   ____ a. In the switchyard, install barriers around the main transformer bay as follows:

   ____ (1) Install a barrier on the east side of the bay facing east.

   ____ (2) Install a barrier on the north side facing north.

   ____ (3) Install a barrier on the west side facing west

   ____ (4) Install a barrier on the south side facing south.

   ____ b. At the main and aux transformers, install barriers around the main and aux transformers.

ATTACHMENT 14
(Page 2 of 6)

UNIT 4 PROTECTED EQUIPMENT POSTINGS DURING ENCLOSURE 1

3. **IF** 4A Train is the designated operating train , **THEN** post signs and/or barriers as follows:

   a. Install barriers in the 4A 4KV bus room at the following locations:

   _____ (1) East side of the 4A switchgear bus from the north wall to the south wall

   _____ (2) West side of the 4A switchgear bus from the north wall to the south wall (Permit access to LP44.)

   b. Install barriers and signs in the U4 480v load center rooms:

   _____ (1) Install barriers in front of 4A and 4C 480v LCs.

   _____ (2) Install protected equipment signs at their respective undervoltage relay panels located on the south wall of the 480v load center rooms.

   c. Install barriers at the following entry doors to 4A EDG rooms:

   _____ (1) Door 138-1

   _____ (2) Door 133-2

   _____ (3) Door 141-1 to the 4A EDG DOTP area

   _____ (4) Door 138-2

   _____ (5) Door 140-1

   _____ (6) Door 139-2

   _____ d. **IF** the 4A ICW or CCW pump is unavailable and the 4D bus is aligned to 4A bus, **THEN** install barriers at the following entry doors to 4D 4kv bus room:

   _____ (1) Door 139-1

   _____ (2) Door 139-2

   _____ (3) Door 135-2

ATTACHMENT 14
(Page 3 of 6)

UNIT 4 PROTECTED EQUIPMENT POSTINGS DURING ENCLOSURE 1

3. (Cont'd)

e. In the control room, place unique information tags on the following pump control switches identifying them as the protected/operating train:

_____ (1) 4A RHR Pump

(2) Select one: (N/A pump not operating)

_____ i. 4A CCW Pump

OR

_____ ii. 4C CCW Pump

(3) Select one: (N/A pump not operating)

_____ i. 4A ICW Pump

OR

_____ ii. 4C ICW Pump

4. **IF** 4B Train is the designated operating train, **THEN** post signs and/or barriers as follows:

a. Install barriers in the 4B 4KV bus room at the following locations:

_____ (1) East side of the 4B switchgear bus from the north wall to the south wall (Permit access to the ASD panel.)

_____ (2) West side of the 4B switchgear bus from the north wall to the south wall

b. Insert barriers and signs in the U4 480v load center rooms:

_____ (1) Install barriers in front of 4B and 4D 480v LCs.

_____ (2) Install protected equipment signs at their respective undervoltage relay panels located on the south wall of the 480v load center rooms.

ATTACHMENT 14
(Page 4 of 6)

UNIT 4 PROTECTED EQUIPMENT POSTINGS DURING ENCLOSURE 1

4. (Cont'd)

c. Install barriers at the following entry doors to 4B EDG rooms:

_____ (1) Door 133-1

_____ (2) Door 133-2

_____ (3) Door 136-1 to the 4B EDG DOTP area

_____ (4) Door 133-3

_____ (5) Door 135-2

_____ (6) Door 135-1

_____ (7) Door 134-2

_____ d. **IF** the 4B ICW or CCW pump is unavailable and the 4D bus is aligned to 4B bus, **THEN** install barriers at the following entry doors to 4D 4kv bus room:

_____ (1) Door 139-1

_____ (2) Door 139-2

_____ (3) Door 135-2

e. In the control room, place unique information tags on the following pump control switches identifying them as the protected/operating train:

_____ (1) 4B RHR Pump

(2) Select one: (N/A pump not operating)

_____ i. 4B CCW Pump

OR

_____ ii. 4C CCW Pump

(3) Select one: (N/A pump not operating)

_____ i. 4B ICW Pump

OR

_____ ii. 4C ICW Pump

ATTACHMENT 14
(Page 5 of 6)

UNIT 4 PROTECTED EQUIPMENT POSTINGS DURING ENCLOSURE 1

5. In the 4A 4KV Bus room, install signs as follows:

_____ a. Place a protected equipment sign on the front of 4C23A (Old Sequencer Cabinet) located on the north wall of the 4A 4KV Bus room.

NOTE

The C bus tie breaker cubicle contains an HGA relay that if mechanically agitated could cause a bus lockout.

_____ b. Place a protected equipment sign on the cubicle door for breaker 4AA09.

_____ c. Place a protected equipment sign on the 4AA04 cubicle door.

6. In the 4B 4KV Bus room, install barriers and signs as follows:

_____ a. Place a protected equipment sign on the front of 4C23B (Old Sequencer Cabinet) located on the north wall of the 4B 4KV Bus room.

NOTE

The C bus tie breaker cubicle contains an HGA relay that if mechanically agitated could cause a bus lockout.

_____ b. Place a protected equipment sign on the cubicle door for breaker 4AB22

_____ c. Place a protected equipment sign on the 4AB04 cubicle door.

ATTACHMENT 14
(Page 6 of 6)

UNIT 4 PROTECTED EQUIPMENT POSTINGS DURING ENCLOSURE 1

_____ 7. In the CCW room, install barriers around the CCW pump whose 4kv power supply is protected above.

_____ a. Record pump protected _____

_____ 8. Install barriers at the top of stairway to running protected RHR Pump Room (10 ft)

_____ a. Record RHR Pump Room protected _____

_____ 9. Install barriers on the north end of 2 of 3 CCW Hxs.

_____ a. Record Hxs protected _____

_____ 10. At the Intake, install barriers around the ICW pump whose 4kv power supply is protected above.

_____ a. Record pump protected _____

Date/Time Completed:_____/_____

PERFORMED BY (Print)	INITIALS
_____	_____
_____	_____
_____	_____

ATTACHMENT 15
(Page 1 of 4)

UNIT 4 PROTECTED EQUIPMENT POSTING DURING ENCLOSURE 2 AND 5 (PRESSURIZER DRAINED <10%)

NOTES

- *The steps in this attachment may be performed in any order.*
- *Due to the size of the switchyard bay, the size of the area around the transformers, and the size of area around the CCW Heat Exchangers, those specified postings are not intended to provide a physical barrier, rather, to provide information and heightened awareness.*
- *If the operating train is swapped, or if components within a train are swapped, protected equipment postings should be placed or removed as necessary to maintain the postings and equipment status consistent. The new alignment should be posted prior to deposting the previously protected equipment.*

1. IF offsite power is from the startup transformer, THEN perform the following:

   a. In the switchyard, install barriers around the startup transformer bay as follows:

   ____ (1) Install a barrier on the east side of the bay facing east.

   ____ (2) Install a barrier on the north side facing north.

   ____ (3) Install a barrier on the west side facing west

   ____ (4) Install a barrier on the south side facing south.

   ____ b. At the startup transformer, install barriers around the startup transformer.

2. IF offsite power is from backfeed, THEN perform the following:

   a. In the switchyard, install barriers around the main transformer bay as follows:

   ____ (1) Install a barrier on the east side of the bay facing east.

   ____ (2) Install a barrier on the north side facing north.

   ____ (3) Install a barrier on the west side facing west

   ____ (4) Install a barrier on the south side facing south.

   ____ b. At the main and aux transformers, install barriers around the main and aux transformers.

ATTACHMENT 15
(Page 2 of 4)

UNIT 4 PROTECTED EQUIPMENT POSTING DURING ENCLOSURE 2 AND 5 (PRESSURIZER DRAINED <10%)

3. Install barriers in the 4A and 4B 4KV Bus rooms as follows:

   a. Install barriers in the 4A 4KV Bus room at the following locations:

   _____ (1) East side of the 4A switchgear bus from the north wall to the south wall

   _____ (2) West side of the 4A switchgear bus from the north wall to the south wall (Permit access to LP44.)

   b. Install barriers in the 4B 4KV Bus room at the following locations:

   _____ (1) East side of the 4B switchgear bus from the north wall to the south wall (Permit access to the ASD panel.)

   _____ (2) West side of the 4B switchgear bus from the north wall to the south wall

4. Install barriers and signs at U4 LC rooms:

   _____ a. Install barriers in front of 4A, 4B and 4C, 4D 480v LCs.

   _____ b. Install protected equipment signs at their respective undervoltage relay panels located on the south wall of the 480v load center rooms.

5. Install barriers at the following entry doors to 4A and 4B EDG rooms:

   _____ a. Door 138-1

   _____ b. Door 133-1

   _____ c. Door 141-1 to the 4A EDG DOTP area

   _____ d. Door 136-1 to the 4B EDG DOTP area

   _____ e. Door 138-2

   _____ f. Door 133-3

ATTACHMENT 15
(Page 3 of 4)

UNIT 4 PROTECTED EQUIPMENT POSTING DURING ENCLOSURE 2 AND 5 (PRESSURIZER DRAINED <10%)

6. In the 4A 4KV Bus room, install signs as follows:

_____ a. Place a protected equipment sign on the front of 4C23A (Old Sequencer Cabinet) located on the north wall of the 4A 4KV Bus room.

NOTE

The C bus tie breaker cubicle contains an HGA relay that if mechanically agitated could cause a bus lockout.

_____ b. Place a protected equipment sign on the 4AA09 cubicle door.

_____ c. Place a protected equipment sign on the 4AA04 cubicle door.

7. In the 4B 4KV Bus room, install signs as follows:

_____ a. Place a protected equipment sign on the front of 4C23B (Old Sequencer Cabinet) located on the north wall of the 4B 4KV Bus room.

NOTE

The C bus tie breaker cubicle contains an HGA relay that if mechanically agitated could cause a bus lockout.

_____ b. Place a protected equipment sign on the cubicle door for breaker 4AB22

_____ c. Place a protected equipment sign on the 4AB04 cubicle door.

8. **IF** 4C CCW pump, **OR** 4C ICW pump, is required to support operability of either RHR train (i.e., any A or B ICW/CCW pump is unavailable), **THEN** install barriers at the following entry doors to 4D 4kv bus room:

_____ a. Door 139-1

_____ b. Door 139-2

_____ c. Door 135-2

ATTACHMENT 15
(Page 4 of 4)

UNIT 4 PROTECTED EQUIPMENT POSTING DURING ENCLOSURE 2 AND 5 (PRESSURIZER DRAINED <10%)

_____ 9. In the CCW room, install barriers around the CCW pumps whose 4kv power supplies were protected above.

_____ a. Record pumps protected _____

_____ 10. Install barriers at the top of stairway to the 4A RHR Pump Room (10 ft).

_____ 11. Install barriers at the top of stairway to the 4B RHR Pump Room (10 ft).

_____ 12. Install barriers on the north end of 2 of 3 CCW Hxs.

_____ a. Record Hxs protected _____

_____ 13. At the Intake, install barriers around the ICW pumps whose 4kv power supplies were protected above.

_____ a. Record pumps protected _____

14. In the control room, place unique information tags on the following pump control switches identifying them as the protected/operating train: (N/A pumps not operating)

_____ a. 4A RHR Pump

_____ b. 4B RHR Pump

_____ c. 4A CCW Pump

_____ d. 4B CCW Pump

_____ e. 4C CCW Pump

_____ f. 4A ICW Pump

_____ g. 4B ICW Pump

_____ h. 4C ICW Pump

_____ i. Record operating train _____

Date/Time Completed:_____/_____

PERFORMED BY (Print)	INITIALS
_____	_____
_____	_____
_____	_____

ATTACHMENT 16
(Page 1 of 7)

UNIT 4 PROTECTED EQUIPMENT POSTINGS DURING ENCLOSURE 3 AND 4 CAVITY FLOODED >23' ABOVE THE VESSEL FLANGE

NOTES

- *The steps in this attachment may be performed in any order.*
- *Due to the size of the switchyard bay, the size of the area around the transformers, and the size of the area around the CCW Heat Exchangers, those specified postings are not intended to provide a physical barrier, rather, to provide information and heightened awareness.*
- *If the operating train is swapped, or if components within a train are swapped, protected equipment postings should be placed or removed as necessary to maintain the postings and equipment status consistent. The new alignment should be posted prior to deposting the previously protected equipment.*

1. **IF** offsite power is from the startup transformer, **THEN** perform the following:

   a. In the switchyard, install barriers around the startup transformer bay as follows:

   ____ (1) Install a barrier on the east side of the bay facing east.

   ____ (2) Install a barrier on the north side facing north.

   ____ (3) Install a barrier on the west side facing west

   ____ (4) Install a barrier on the south side facing south.

   ____ b. At the startup transformer, install barriers around the startup transformer.

2. **IF** offsite power is from backfeed, **THEN** perform the following:

   a. In the switchyard, install barriers around the main transformer bay as follows:

   ____ (1) Install a barrier on the east side of the bay facing east.

   ____ (2) Install a barrier on the north side facing north.

   ____ (3) Install a barrier on the west side facing west

   ____ (4) Install a barrier on the south side facing south.

   ____ b. At the main and aux transformers, install barriers around the main and aux transformers.

ATTACHMENT 16
(Page 2 of 7)

UNIT 4 PROTECTED EQUIPMENT POSTINGS DURING ENCLOSURE 3 AND 4 CAVITY FLOODED >23' ABOVE THE VESSEL FLANGE

3. **IF** 4A train is the designated operating train, **THEN** post signs and/or barriers as follows:

   a. Install barriers in the 4A 4KV Bus room at the following locations:

   _____ (1) East side of the 4A switchgear bus from the north wall to the south wall

   _____ (2) West side of the 4A switchgear bus from the north wall to the south wall (Permit access to LP44.)

   b. In the 4A 4KV bus room, install signs as follows:

   _____ (1) Place a protected equipment sign on the front of 4C23A (Old Sequencer Cabinet) located on the north wall of the 4A 4KV bus room.

> **NOTE**
>
> *The C bus tie breaker cubicle contains an HGA relay that if mechanically agitated could cause a bus lockout.*

   _____ (2) Place a protected equipment sign on the cubicle door for breaker 4AA09.

   _____ (3) Place a protected equipment sign on the 4AA04 cubicle door.

   _____ c. In the 4B 4kv bus room, place a protected equipment sign on the 4AB04 cubicle door.

   d. **IF** the 480v LCs are split, **THEN:**

   _____ (1) Install barriers in front of 4A and 4C 480v LCs.

   _____ (2) Install protected equipment signs at their respective undervoltage relay panels located on the south wall of the 480v load center rooms.

   _____ e. **IF** the reactor core is less than fully loaded, **THEN** place a magnetic stop sign on 480V LC Breaker Cubicle 40309, SFP Cooling Pumps (4P212A/B).

   f. Install barriers at the following entry doors to 4A EDG rooms:

   _____ (1) Door 138-1

   _____ (2) Door 133-2

   _____ (3) Door 141-1 to the 4A EDG DOTP area

   _____ (4) Door 138-2

   _____ (5) Door 140-1

   _____ (6) Door 139-2

ATTACHMENT 16
(Page 3 of 7)

UNIT 4 PROTECTED EQUIPMENT POSTINGS DURING ENCLOSURE 3 AND 4 CAVITY FLOODED >23' ABOVE THE VESSEL FLANGE

3. (Cont'd)

g. **IF** the 4A ICW or CCW pump is unavailable and the 4D bus is aligned to the 4A bus, **THEN** install barriers at the following entry doors to 4D 4kv bus room:

____ (1) Door 139-1

____ (2) Door 139-2

____ (3) Door 135-2

____ h. Install barriers at the top of stairway to the 4A RHR pump room.

i. In the Control Room, place unique information tags on the following pump control switches identifying them as the protected/operating train:

____ (1) 4A RHR Pump

(2) Select one: (N/A pump not operating)

____ i. 4A CCW Pump

OR

____ ii. 4C CCW Pump

(3) Select one: (N/A pump not operating)

____ i. 4A ICW Pump

OR

____ ii. 4C ICW Pump

ATTACHMENT 16
(Page 4 of 7)

UNIT 4 PROTECTED EQUIPMENT POSTINGS DURING ENCLOSURE 3 AND 4 CAVITY FLOODED >23' ABOVE THE VESSEL FLANGE

4. **IF** 4B Train is the designated operating train, **THEN** post signs and/or barriers as follows:

   a. Install barriers in the 4B 4KV Bus room at the following locations:

   _____ (1) East side of the 4B switchgear bus from the north wall to the south wall (Permit access to the ASD panel.)

   _____ (2) West side of the 4B switchgear bus from the north wall to the south wall

   b. In the 4B 4KV Bus room, install signs as follows:

   _____ (1) Place a protected equipment sign on the front of 4C23B (Old Sequencer Cabinet) located on the north wall of the 4B 4KV Bus room.

NOTE

The C bus tie breaker cubicle contains an HGA relay that if mechanically agitated could cause a bus lockout.

   _____ (2) Place a protected equipment sign on the cubicle door for breaker 4AB22

   _____ (3) Place a protected equipment sign on the 4AB04 cubicle door.

   c. **IF** the 480v LCs are split, **THEN:**

   _____ (1) Install barriers in front of 4B and 4D 480v LCs.

   _____ (2) Install protected equipment signs at their respective undervoltage relay panels located on the south wall of the 480v load center rooms.

   d. Install barriers at the following entry doors to 4B EDG rooms:

   _____ (1) Door 133-1

   _____ (2) Door 133-2

   _____ (3) Door 136-1 to the 4B EDG DOTP area.

   _____ (4) Door 133-3

   _____ (5) Door 135-2

   _____ (6) Door 134-2

   _____ (7) Door 135-1

ATTACHMENT 16
(Page 5 of 7)

UNIT 4 PROTECTED EQUIPMENT POSTINGS DURING ENCLOSURE 3 AND 4 CAVITY FLOODED >23' ABOVE THE VESSEL FLANGE

4. (Cont'd)

e. **IF** the 4B ICW or CCW pump is unavailable and the 4D bus is aligned to the 4B bus, **THEN** install barriers at the following entry doors to 4D 4kv bus room:

_____ (1) Door 139-1

_____ (2) Door 139-2

_____ (3) Door 135-2

f. **IF** the reactor core is less than fully loaded, **THEN** perform the following:

(1) **IF** 4C 480v LC is fed from 4A 4kv bus, then post signs and/or barriers as follows:

a) Install barriers in the 4A 4KV bus room at the following locations:

_____ 1) East side of the 4A switchgear bus from the north wall to the south wall

_____ 2) West side of the 4A switchgear bus from the north wall to the south wall (Permit access to LP44.)

NOTE

The C bus tie breaker cubicle contains an HGA relay that if mechanically agitated could cause a bus lockout.

b) In the 4A 4KV bus room, install signs as follows:

_____ 1) Place a protected equipment sign on the front of 4C23A (Old Sequencer Cabinet) located on the north wall of the 4A 4KV bus room.

_____ 2) Place a protected equipment sign on the cubicle door for breaker 4AA09.

c) Install barriers at the following locations in the Unit 4 480v load center rooms:

_____ 1) Install barriers in front of 4A, 4B and 4C, 4D 480v LCs.

_____ 2) Install protected equipment signs at their respective undervoltage relay panels located on the south wall of the 480v load center rooms.

ATTACHMENT 16
(Page 6 of 7)

UNIT 4 PROTECTED EQUIPMENT POSTINGS DURING ENCLOSURE 3 AND 4 CAVITY FLOODED >23' ABOVE THE VESSEL FLANGE

4.f.(1) (Cont'd)

d) Install barriers at the following entry doors to 4A EDG rooms:

_____ 1) Door 138-1

_____ 2) Door 141-1 to the 4A EDG DOTP area

_____ 3) Door 138-2

_____ 4) Door 139-2

_____ g. In the 4A 4kv bus room, place a protected equipment sign on the 4AA04 cubicle door.

_____ h. Install barriers at the top of stairway to the 4B RHR pump room.

i. In the Control Room, place unique information tags on the following pump control switches identifying them as the protected/operating train:

_____ (1) 4B RHR Pump

(2) Select one: (N/A pump not operating)

_____ i. 4B CCW Pump

OR

_____ ii. 4C CCW Pump

(3) Select one: (N/A pump not operating)

_____ i. 4B ICW Pump

OR

_____ ii. 4C ICW Pump

5. **IF** the 480v LCs are cross-tied, **THEN** post signs and/or barriers as follows:

a. Install barriers at the following locations in the Unit 4 480v load center rooms:

_____ (1) Install barriers in front of 4A, 4B and 4C, 4D 480v LCs.

_____ (2) Install protected equipment signs at their respective undervoltage relay panels located on the south wall of the 480v load center rooms.

ATTACHMENT 16
(Page 7 of 7)

UNIT 4 PROTECTED EQUIPMENT POSTINGS DURING ENCLOSURE 3 AND 4 CAVITY FLOODED >23' ABOVE THE VESSEL FLANGE

_____ 6. In the CCW room, install barriers around the CCW pump whose 4kv power supply is protected above.

_____ a. Record pump protected _____

_____ 7. Install barriers on the north end of 2 of 3 CCW Hxs.

_____ a. Record Hxs protected _____

_____ 8. **IF** the reactor core is less than fully loaded, **THEN** perform the following:

_____ a. Install a barrier at the SFP pump and Hx room entry door.

_____ b. Install a barrier at the SFP Cooling Heat Exchanger.

_____ c. Place a magnetic stop sign on 480V LC Breaker Cubicle 40309, SFP Cooling Pumps (4P212A/B)

_____ 9. At the Intake, install barriers around the ICW pump whose 4kv power supply is protected above.

_____ a. Record pump protected _____

_____ 10. **IF** offsite power is from backfeed, **THEN** place a protected equipment sign at the safeguards racks to protect the Aux Transformer breaker.

a. 4QR42

b. 4QR43

c. 4QR44

d. 4QR45

Date/Time Completed:_____/_____

PERFORMED BY (Print)	INITIALS
_____	_____
_____	_____
_____	_____

ATTACHMENT 17
(Page 1 of 5)

UNIT 4 PROTECTED EQUIPMENT POSTINGS DURING ENCLOSURE 5 (PRESSURIZER FILLED >10%)

NOTES

- *The steps in this attachment may be performed in any order.*
- *Due to the size of the switchyard bay, the size of the area around the transformers, and the size of the area around the CCW Heat Exchangers, those specified postings are not intended to provide a physical barrier, rather, to provide information and heightened awareness.*
- *If the operating train is swapped, or if components within a train are swapped, protected equipment postings should be placed or removed as necessary to maintain the postings and equipment status consistent. The new alignment should be posted prior to deposting the previously protected equipment.*

1. IF offsite power is from the startup transformer, THEN perform the following:

   a. In the switchyard, install barriers around the startup transformer bay as follows:

   _____ (1) Install a barrier on the east side of the bay facing east.

   _____ (2) Install a barrier on the north side facing north.

   _____ (3) Install a barrier on the west side facing west

   _____ (4) Install a barrier on the south side facing south.

   _____ b. At the startup transformer, install barriers around the startup transformer.

2. IF offsite power is from backfeed, THEN perform the following:

   a. In the switchyard, install barriers around the main transformer bay as follows:

   _____ (1) Install a barrier on the east side of the bay facing east.

   _____ (2) Install a barrier on the north side facing north.

   _____ (3) Install a barrier on the west side facing west

   _____ (4) Install a barrier on the south side facing south.

   _____ b. At the main and aux transformers, install barriers around the main and aux transformers.

ATTACHMENT 17
(Page 2 of 5)

UNIT 4 PROTECTED EQUIPMENT POSTINGS DURING ENCLOSURE 5 (PRESSURIZER FILLED >10%)

3. IF 4A Train is the designated operating train, THEN post signs and/or barriers as follows:

   a. Install barriers at in the 4A 4KV Bus room at the following locations:

   ____ (1) East side of the 4A switchgear bus from the north wall to the south wall

   ____ (2) West side of the 4A switchgear bus from the north wall to the south wall (Permit access to LP44.)

   b. In the 4A 4KV Bus room, install signs as follows:

   ____ (1) Place a protected equipment sign on the front of 4C23A (Old Sequencer Cabinet) located on the north wall of the 4A 4KV Bus room.

NOTE

The C bus tie breaker cubicle contains an HGA relay that if mechanically agitated could cause a bus lockout.

   ____ (2) Place a protected equipment sign on the cubicle door for breaker 4AA09

   ____ (3) Place a protected equipment sign on the 4AA04 cubicle door.

   c. Install barriers and signs at the U4 480v load center rooms:

   ____ (1) Install barriers in front of 4A and 4C 480v LCs.

   ____ (2) Install protected equipment signs at their respective undervoltage relay panels located on the south wall of the 480v load center rooms.

   d. Install barriers at the following entry doors to 4A EDG rooms:

   ____ (1) Door 138-1

   ____ (2) Door 133-2

   ____ (3) Door 141-1 to the 4A EDG DOTP area

   ____ (4) Door 138-2

   ____ (5) Door 140-1

   ____ (6) Door 139-2

   ____ e. Install barriers at the top of stairway to the 4A RHR Pump Room (10 ft).

ATTACHMENT 17
(Page 3 of 5)

UNIT 4 PROTECTED EQUIPMENT POSTINGS DURING ENCLOSURE 5 (PRESSURIZER FILLED >10%)

3. (Cont'd)

f. In the control room, place unique information tags on the following pump control switches identifying them as the protected/operating train:

____ (1) 4A RHR Pump

(2) Select one: (N/A pump not operating)

____ i. 4A CCW Pump

OR

____ ii. 4C CCW Pump

(3) Select one: (N/A pump not operating)

____ i. 4A ICW Pump

OR

____ ii. 4C ICW Pump

4. **IF** 4B Train is the designated operating train, **THEN** post signs and/or barriers as follows:

a. Install barriers in the 4B 4KV Bus room at the following locations:

____ (1) East side of the 4B switchgear bus from the north wall to the south wall (Permit access to the ASD panel.)

____ (2) West side of the 4B switchgear bus from the north wall to the south wall

b. In the 4B 4KV Bus room, install signs as follows:

____ (1) Place a protected equipment sign on the front of 4C23B (Old Sequencer Cabinet) located on the north wall of the 4B 4KV Bus room.

NOTE

The C bus tie breaker cubicle contains an HGA relay that if mechanically agitated could cause a bus lockout.

____ (2) Place a protected equipment sign on the cubicle door for breaker 4AB22

____ (3) Place a protected equipment sign on the 4AB04 cubicle door.

ATTACHMENT 17
(Page 4 of 5)

UNIT 4 PROTECTED EQUIPMENT POSTINGS DURING ENCLOSURE 5 (PRESSURIZER FILLED >10%)

4. (Cont'd)

c. Install barriers and signs in the U4 480v load center rooms:

_____ (1) Install barriers in front of 4B and 4D 480v LCs.

_____ (2) Install protected equipment signs at their respective undervoltage relay panels located on the south wall of the 480v load center rooms.

d. Install barriers at the following entry doors to 4B EDG rooms:

_____ (1) Door 133-1

_____ (2) Door 133-2

_____ (3) Door 136-1 to the 4B EDG DOTP area

_____ (4) Door 133-3

_____ (5) Door 135-2

_____ (6) Door 134-2

_____ (7) Door 135-1

_____ e. Install barriers at the top of stairway to the 4B RHR Pump Room (10 ft).

f. In the control room, place unique information tags on the following pump control switches identifying them as the protected/operating train:

_____ (1) 4B RHR Pump

(2) Select one: (N/A pump not operating)

_____ i. 4B CCW Pump

OR

_____ ii. 4C CCW Pump

(3) Select one: (N/A pump not operating)

_____ i. 4B ICW Pump

OR

_____ ii. 4C ICW Pump

ATTACHMENT 17
(Page 5 of 5)

UNIT 4 PROTECTED EQUIPMENT POSTINGS DURING ENCLOSURE 5 (PRESSURIZER FILLED >10%)

_____ 5. **IF** the 4C CCW or 4C ICW pump is running and required for operability of the protected RHR train, **THEN** install barriers at the following entry doors to the 4D 4kv bus room.

a. Door 139-1

b. Door 139-2

c. Door 135-2

_____ 6. In the CCW room, install barriers around the CCW pump whose 4kv power supply is protected above.

_____ a. Record pump protected _____

_____ 7. Install barriers on the north end of 2 of 3 CCW Hxs.

_____ a. Record Hxs protected _____

_____ 8 At the Intake, install barriers around the ICW pump whose 4kv power supply is protected above.

_____ a. Record pump protected _____

Date/Time Completed:_____/_____

PERFORMED BY (Print)	INITIALS
_____	_____
_____	_____
_____	_____

ATTACHMENT 18
(Page 1 of 5)

UNIT 4 PROTECTED EQUIPMENT POSTINGS DURING ENCLOSURE 6

NOTES

- *The steps in this attachment may be performed in any order.*
- *Due to the size of the switchyard bay, the size of the area around the transformers, and the size of the area around the CCW Heat Exchangers, those specified postings are not intended to provide a physical barrier, rather, to provide information and heightened awareness.*
- *If the operating train is swapped, or if components within a train are swapped, protected equipment postings should be placed or removed as necessary to maintain the postings and equipment status consistent. The new alignment should be posted prior to deposting the previously protected equipment.*

1. **IF** offsite power is from the startup transformer, **THEN** perform the following:

   a. In the switchyard, install barriers around the startup transformer bay as follows:

   ____ (1) Install a barrier on the east side of the bay facing east.

   ____ (2) Install a barrier on the north side facing north.

   ____ (3) Install a barrier on the west side facing west

   ____ (4) Install a barrier on the south side facing south.

   ____ b. At the startup transformer, install barriers around the startup transformer.

2. **IF** offsite power is from backfeed, **THEN** perform the following:

   a. In the switchyard, install barriers around the main transformer bay as follows:

   ____ (1) Install a barrier on the east side of the bay facing east.

   ____ (2) Install a barrier on the north side facing north.

   ____ (3) Install a barrier on the west side facing west

   ____ (4) Install a barrier on the south side facing south.

   ____ b. At the main and aux transformers, install barriers around the main and aux transformers.

ATTACHMENT 18
(Page 2 of 5)

UNIT 4 PROTECTED EQUIPMENT POSTINGS DURING ENCLOSURE 6

3. **IF** 4A Train is the designated operating train, **THEN** post signs and/or barriers as follows:

   a. Install barriers in the 4A 4KV Bus room at the following locations:

   ____ (1) East side of the 4A switchgear bus from the north wall to the south wall

   ____ (2) West side of the 4A switchgear bus from the north wall to the south wall (Permit access to LP44.)

   b. In the 4A 4KV Bus room, install signs as follows:

   ____ (1) Place a protected equipment sign on the front of 4 (Old Sequencer Cabinet) located on the north wall of the 4A 4KV Bus room.

NOTE

The C bus tie breaker cubicle contains an HGA relay that if mechanically agitated could cause a bus lockout.

   ____ (2) Place a protected equipment sign on the cubicle door for breaker 4AA09.

   ____ (3) Place a protected equipment sign on the 4AA04 cubicle door.

   c. Install barriers and signs in the U4 480v load center rooms:

   ____ (1) Install barriers in front of 4A and 4C 480v LCs.

   ____ (2) Install protected equipment signs at their respective undervoltage relay panels located on the south wall of the 480v load center rooms.

   d. Install barriers at the following entry doors to 4A EDG rooms:

   ____ (1) Door 138-1

   ____ (2) Door 133-2

   ____ (3) Door 141-1 to the 4A EDG DOTP area

   ____ (4) Door 138-2

   ____ (5) Door 140-1

   ____ (6) Door 139-2

ATTACHMENT 18
(Page 3 of 5)

UNIT 4 PROTECTED EQUIPMENT POSTINGS DURING ENCLOSURE 6

3. Cont'd)

e. **IF** the 4A ICW or CCW pump is unavailable and the 4D bus is aligned to the 4A bus, **THEN** install barriers at the following entry doors to 4D 4kv bus room:

____ (1) Door 139-1

____ (2) Door 139-2

____ (3) Door 135-2

f. In the control room, place unique information tags on the following pump control switches identifying them as the protected/operating train:

____ (1) 4A RHR Pump

(2) Select one: (N/A pump not operating)

____ i. 4A CCW Pump

OR

____ ii. 4C CCW Pump

(3) Select one: (N/A pump not operating)

____ i. 4A ICW Pump

OR

____ ii. 4C ICW Pump

4. **IF** 4B Train is the designated operating train, **THEN** post signs and/or barriers as follows:

a. Install barriers in the 4B 4KV Bus room at the following locations:

____ (1) East side of the 4B switchgear bus from the north wall to the south wall (Permit access to the ASD panel.)

____ (2) West side of the 4B switchgear bus from the north wall to the south wall

b. In the 4B 4KV Bus room, install signs as follows:

____ (1) Place a protected equipment sign on the front of 4C23B (Old Sequencer Cabinet) located on the north wall of the 4B 4KV Bus room.

ATTACHMENT 18
(Page 4 of 5)

UNIT 4 PROTECTED EQUIPMENT POSTINGS DURING ENCLOSURE 6

4.b. (Cont'd)

NOTE

The C bus tie breaker cubicle contains an HGA relay that if mechanically agitated could cause a bus lockout.

_____ (2) Place a protected equipment sign on the cubicle door for breaker 4AB22

_____ (3) Place a protected equipment sign on the 4AB04 cubicle door.

_____ c. Install barriers and signs in the 480v load center rooms:

_____ (1) Install barriers in front of 4B and 4D 480v LCs.

_____ (2) Install protected equipment signs at their respective undervoltage relay panels located on the south wall of the 480v load center rooms.

d. Install barriers at the following entry doors to 4B EDG rooms:

_____ (1) Door 133-1

_____ (2) Door 133-2

_____ (3) Door 136-1 to the 4B EDG DOTP area

_____ (4) Door 133-3

_____ (5) Door 135-2

_____ (6) Door 134-2

_____ (7) Door 135-1

e. **IF** the 4B ICW or CCW pump is unavailable and the 4D bus is aligned to the 4B bus, **THEN** install barriers at the following entry doors to 4D 4kv bus room:

_____ (1) Door 139-1

_____ (2) Door 139-2

_____ (3) Door 135-2

ATTACHMENT 18
(Page 5 of 5)

UNIT 4 PROTECTED EQUIPMENT POSTINGS DURING ENCLOSURE 6

4. (Cont'd)

f. In the control room, place unique information tags on the following pump control switches identifying them as the protected/operating train:

____ (1) 4B RHR Pump

(2) Select one: (N/A pump not operating)

____ i. 4B CCW Pump

OR

____ ii. 4C CCW Pump

(3) Select one: (N/A pump not operating)

____ i. 4B ICW Pump

OR

____ ii. 4C ICW Pump

____ 5. In the CCW room, install barriers around the CCW pump whose 4kv power supply is protected above.

____ a. Record pump protected _____

____ 6. Install barriers at the top of the stairway to the running protected RHR pump room (10 ft).

____ a. Record RHR pump room protected _____

____ 7 Install barriers on the north side of 2 of 3 CCW Hxs.

____ a. Record Hxs protected _____

____ 8 At the Intake, install barriers around the ICW pump whose 4kv power supply is protected above.

____ a. Record pump protected _____

Date/Time Completed:_____/_____

PERFORMED BY (Print)	INITIALS
_____	_____
_____	_____
_____	_____

ATTACHMENT 19
(Page 1 of 6)

UNIT 4 PROTECTED EQUIPMENT POSTINGS DURING ENCLOSURE 7 RCS DEFUELED

NOTES

- *The steps in this attachment may be performed in any order.*
- *Due to the size of the switchyard bay, the size of the area around the transformers, and the size of the area around the CCW Heat Exchangers, those specified postings are not intended to provide a physical barrier, rather, to provide information and heightened awareness.*
- *If the operating train is swapped, or if components within a train are swapped, protected equipment postings should be placed or removed as necessary to maintain the postings and equipment status consistent. The new alignment should be posted prior to deposting the previously protected equipment.*

1. **IF** offsite power is from the startup transformer, **THEN** perform the following:

   a. In the switchyard, install barriers around the startup transformer bay as follows:

   ____ (1) Install a barrier on the east side of the bay facing east.

   ____ (2) Install a barrier on the north side facing north.

   ____ (3) Install a barrier on the west side facing west

   ____ (4) Install a barrier on the south side facing south.

   ____ b. At the startup transformer, install barriers around the startup transformer.

2. **IF** offsite power is from backfeed, **THEN** perform the following:

   a. In the switchyard, install barriers around the main transformer bay as follows:

   ____ (1) Install a barrier on the east side of the bay facing east.

   ____ (2) Install a barrier on the north side facing north.

   ____ (3) Install a barrier on the west side facing west

   ____ (4) Install a barrier on the south side facing south.

   ____ b. At the main and aux transformers, install barriers around the main and aux transformers.

ATTACHMENT 19
(Page 2 of 6)

UNIT 4 PROTECTED EQUIPMENT POSTINGS DURING ENCLOSURE 7 RCS DEFUELED

3. **IF** 4C 480v LC is fed from 4A 4kv bus, **THEN** post signs and/or barriers as follows:

   a. Install barriers in the 4A 4KV Bus room at the following locations:

   _____ (1) East side of the 4A switchgear bus from the north wall to the south wall

   _____ (2) West side of the 4A switchgear bus from the north wall to the south wall (Permit access to LP44.)

   b. In the 4A 4KV Bus room, install signs as follows:

   _____ (1) Place a protected equipment sign on the front of 4C23A (Old Sequencer Cabinet) located on the north wall of the 4A 4KV Bus room.

> **NOTE**
>
> *The C bus tie breaker cubicle contains an HGA relay that if mechanically agitated could cause a bus lockout.*

   _____ (2) Place a protected equipment sign on the 4AA09 cubicle door.

   _____ (3) Place a protected equipment sign on the 4AA04 cubicle door.

   _____ c. In the 4B 4kv Bus Room, place a Protected Equipment sign on the 4AB04 Cubicle Door.

   _____ d. Install barriers and signs in the U4 480v load center rooms:

   _____ (1) Install barriers in front of 4A and 4C 480v LCs.

   _____ (2) Install protected equipment signs at their respective undervoltage relay panels located on the south wall of the 480v load center rooms.

   _____ (3) **IF** load centers are cross-tied, **THEN** install barriers in front of 4B and 4D 480v LCs.

   e. Install barriers at the following entry doors to 4A EDG rooms:

   _____ (1) Door 138-1

   _____ (2) Door 133-2

   _____ (3) Door 141-1 to the 4A EDG DOTP area

   _____ (4) Door 138-2

   _____ (5) Door 140-1

   _____ (6) Door 139-2

ATTACHMENT 19
(Page 3 of 6)

UNIT 4 PROTECTED EQUIPMENT POSTINGS DURING ENCLOSURE 7 RCS DEFUELED

3. (Cont'd)

f. **IF** the 4A ICW or CCW pump is unavailable and the 4D bus is aligned to the 4A bus, **THEN** install barriers at the following entry doors to 4D 4kv bus room:

_____ (1) Door 139-1

_____ (2) Door 139-2

_____ (3) Door 135-2

g. In the control room, place unique information tags on the following pump control switches identifying them as the protected/operating train:

(1) Select one: (N/A pump not operating)

_____ i. 4A CCW Pump

OR

_____ ii. 4C CCW Pump

(2) Select one: (N/A pump not operating)

_____ i. 4A ICW Pump

OR

_____ ii. 4C ICW Pump

4. **IF** 4C 480v LC is fed from 4D LC, **THEN** post signs and/or barriers as follows:

a. Install barriers in the 4B 4KV Bus room at the following locations:

_____ (1) East side of the 4B switchgear bus from the north wall to the south wall (Permit access to the ASD panel.)

_____ (2) West side of the 4B switchgear bus from the north wall to the south wall

b. In the 4B 4KV Bus room, install signs as follows:

_____ (1) Place a protected equipment sign on the front of 4C23B (Old Sequencer Cabinet) located on the north wall of the 4B 4KV Bus room.

ATTACHMENT 19
(Page 4 of 6)

UNIT 4 PROTECTED EQUIPMENT POSTINGS DURING ENCLOSURE 7 RCS DEFUELED

4.b. (Cont'd)

NOTE

The C bus tie breaker cubicle contains an HGA relay that if mechanically agitated could cause a bus lockout.

_____ (2) Place a protected equipment sign on the cubicle door for breaker 4AB22

_____ (3) Place a protected equipment sign on the 4AB04 cubicle door.

_____ c. In the 4A 4kv Bus Room, place a Protected Equipment sign on the 4AA04 Cubicle Door.

d. Install barriers at the following locations in the Unit 4 480v load center rooms:

_____ (1) Install barriers in front of 4A, 4B and 4C, 4D 480v LCs.

_____ (2) Install protected equipment signs at their respective undervoltage relay panels located on the south wall of the 480v load center rooms.

e. Install barriers at the following entry doors to 4B EDG rooms:

_____ (1) Door 133-1

_____ (2) Door 133-2

_____ (3) Door 136-1 to the 4B EDG DOTP area

_____ (4) Door 133-3

_____ (5) Door 135-2

_____ (6) Door 134-2

_____ (7) Door 135-1

f. **IF** the 4B ICW or CCW pump is unavailable and the 4D bus is aligned to the 4B bus, **THEN** install barriers at the following entry doors to 4D 4kv bus room:

_____ (1) Door 139-1

_____ (2) Door 139-2

_____ (3) Door 135-2

ATTACHMENT 19
(Page 5 of 6)

UNIT 4 PROTECTED EQUIPMENT POSTINGS DURING ENCLOSURE 7 RCS DEFUELED

4. (Cont'd)

g. In the control room, place unique information tags on the following pump control switches identifying them as the protected/operating train:

(1) Select one: (N/A pump not operating)

_____ i. 4B CCW Pump

OR

_____ ii. 4C CCW Pump

(2) Select one: (N/A pump not operating)

_____ i. 4B ICW Pump

OR

_____ ii. 4C ICW Pump

_____ 5. In the CCW room, install barriers around the CCW pump whose 4kv power supply is protected above.

_____ a. Record pump protected _____

ATTACHMENT 19
(Page 6 of 6)

UNIT 4 PROTECTED EQUIPMENT POSTINGS DURING ENCLOSURE 7 RCS DEFUELED

_____ 6. Install barriers on the north end of 1 of 3 CCW Hxs.

_____ a. Record Hxs protected _____

_____ 7. At the SFP pump and Hx room, install a barrier at the entry door.

_____ 8. Place a magnetic stop sign at 480V LC Breaker Cubicle 40309, SFP Cooling Pump 4P212A/B.

_____ 9. At the Intake, install barriers around the ICW pump whose 4kv power supply is protected above.

_____ a. Record pump protected _____

_____ 10. **IF** offsite power is from backfeed, **THEN** place a protected equipment sign at the safeguards racks to protect the Aux Transformer breaker.

a. 4QR42

b. 4QR43

c. 4QR44

d. 4QR45

Date/Time Completed:_____/_____

PERFORMED BY (Print)	INITIALS
_____	_____
_____	_____
_____	_____

ATTACHMENT 20
(Page 1 of 3)

UNIT 3 PROTECTED EQUIPMENT POSTINGS RESTORATION

_____ 1. Ensure Unit 3 RCS temperature is above 200 deg.

NOTE

The remainder of this attachment may be completed in any order.

2. In switchyard, perform the following:

   a. In the startup transformer bay, ensure the following barriers are removed:

_____ (1) Barrier on the east side of the bay facing east.

_____ (2) Barrier on the north side facing north.

_____ (3) Barrier on the west side facing west

_____ (4) Barrier on the south side facing south.

   b. In the main transformer bay, ensure the following barriers are removed:

_____ (1) Barrier on the east side of the bay facing east.

_____ (2) Barrier on the north side facing north.

_____ (3) Barrier on the west side facing west

_____ (4) Barrier on the south side facing south.

_____ 3. At the startup transformer, ensure all barriers around the startup transformer are removed.

_____ 4. At the main and aux transformers, ensure all barriers around the main and aux transformers are removed.

5. At the 4kv bus rooms, perform the following:

   a. Ensure barriers are removed from the following entry locations:

_____ (1) East side of the 3A switchgear bus from the north wall to the south wall

_____ (2) West side of the 3A switchgear bus from the north wall to the south wall

_____ (1) East side of the 3B switchgear bus from the north wall to the south wall

_____ (2) West side of the 3B switchgear bus from the north wall to the south wall

ATTACHMENT 20
(Page 2 of 3)

UNIT 3 PROTECTED EQUIPMENT POSTINGS RESTORATION

5. (Cont'd)

b. In the 3A 4kv bus room, ensure protected equipment signs and barriers are removed at the following locations:

_____ (1) Breaker 3AA09, Cross-tie to 3C Bus breaker

_____ (2) Cubicle door 3AA04

_____ (3) 3C23A (old sequencer panel)

c. In the 3B 4kv bus room, ensure protected equipment signs and barriers are removed at the following locations:

_____ (1) Breaker 3AB22, Cross-tie to 3C Bus breaker

_____ (2) Cubicle door 3AB04

_____ (3) 3C23B (old sequencer panel)

6. At the 480v load center rooms, perform the following:

a. Ensure barriers removed from the following locations:

_____ (1) In front of 3A, 3B and 3C, 3D 480v LCs

_____ (2) Remove protected equipment signs at their respective undervoltage relay panels located on the south wall of the 480v load center rooms.

7. At the EDG rooms ensure barriers are removed from the following entry doors:

_____ a. Door 073-1

_____ b. Door 072-2

_____ c. Door 131-1 to the 3A EDG radiator area

_____ d. Door 075-1to the 3A EDG Daytank room

_____ e. Door 072-1

_____ f. Vital area door 3EDG3131 to the 3B EDG radiator area

_____ g. Door 074-1 to the 3B EDG Daytank room

ATTACHMENT 20
(Page 3 of 3)

UNIT 3 PROTECTED EQUIPMENT POSTINGS RESTORATION

8. Remove 3A MCC 480v MCC Vital Section as follows:

_____ a. At 3A 480v MCC Vital Section (east side of Turbine Bldg walkway, immediately above condensate pumps), remove magnetic **STOP** signs on each cabinet door of 3A 480v MCC Vital Section (8 signs total).

_____ b. At 3A 480v MCC Vital Section (east side of Turbine Bldg walkway, immediately above condensate pumps), remove a magnetic **STOP** sign on the north side facing north.

_____ c. At 3A 480v MCC Vital Section (east side of Turbine Bldg walkway, immediately above condensate pumps), remove a magnetic **STOP** sign on the south side facing south.

9. At the 3D 4kv bus room, ensure barriers at the following entry doors are removed:

_____ (1) Door 134-1

_____ (2) Door 134-2

_____ 10. In the Control Room, ensure any information tags on the RHR, CCW, or ICW pump control switches for designated operating and protected trains are removed.

_____ 11. In the Control Room, ensure any protected equipment signs are removed from safeguards racks 3QR42/43/44/45.

_____ 12. In the CCW room, ensure all barriers around the CCW pumps are removed.

_____ 13. At the RHR pump rooms, ensure all barriers to 3A and 3B RHR pumps are removed.

_____ 14. In the CCW room, ensure all barriers around CCW Hxs are removed.

_____ 15. At the Intake, ensure all barriers around the ICW pumps are removed.

_____ 16. At the U3 SFP pump room, ensure all barriers are removed from the entrance door and SFP Cooling Heat Exchanger.

_____ 17. At 480V LC Breaker Cubicle 30309 SFP Cooling Pump remove stop sign.

Date/Time Completed:_____/_____

PERFORMED BY (Print)	INITIALS
_____	_____
_____	_____
_____	_____

ATTACHMENT 21
(Page 1 of 4)

UNIT 4 PROTECTED EQUIPMENT POSTINGS RESTORATION

_____ 1. Ensure Unit 4 RCS temperature is above 200 deg.

NOTE

The remainder of this attachment may be completed in any order.

2. In switchyard, perform the following:

   a. In the startup transformer bay, ensure the following barriers are removed:

   _____ (1) Barrier on the east side of the bay facing east.

   _____ (2) Barrier on the north side facing north.

   _____ (3) Barrier on the west side facing west

   _____ (4) Barrier on the south side facing south.

   b. In the main transformer bay, ensure the following barriers are removed:

   _____ (1) Barrier on the east side of the bay facing east.

   _____ (2) Barrier on the north side facing north.

   _____ (3) Barrier on the west side facing west

   _____ (4) Barrier on the south side facing south.

_____ 3. At the startup transformer, ensure all barriers around the startup transformer are removed.

_____ 4. At the main and aux transformers, ensure all barriers around the main and aux transformers are removed.

5. At the 4kv bus rooms, perform the following:

   a. Ensure barriers are removed from the following entry locations:

   _____ (1) East side of 4A switchgear bus from north to south wall

   _____ (2) West side of 4A switchgear bus from north to south wall

   _____ (3) East side of 4B switchgear bus from north to south wall

   _____ (4) West side of 4B switchgear bus from north to south wall

ATTACHMENT 21
(Page 2 of 4)

UNIT 4 PROTECTED EQUIPMENT POSTINGS RESTORATION

5. (Cont'd)

b. In the 4A 4KV Bus room, ensure protected equipment signs are removed from the following cubicle doors:

_____ (1) Breaker 4AA09, Cross-tie to 4C Bus breaker

_____ (2) Cubicle door 4AA04

_____ (3) 4C23A (old sequencer panel)

c. In the 4B 4KV Bus room, ensure protected equipment signs are removed from the following cubicle doors:

_____ (1) Breaker 4AB22, Cross-tie to 4C Bus breaker

_____ (2) Cubicle door 4AB04

_____ (3) 4C23B (old sequencer panel)

a. Ensure barriers removed from the following locations:

_____ (1) In front of 4A and 4B 480v load centers

_____ (2) In front of 4C and 4D 480v load centers

_____ b. Remove protected equipment signs at their respective undervoltage relay panels located on the south wall of the 480v load center rooms.

ATTACHMENT 21
(Page 3 of 4)

UNIT 4 PROTECTED EQUIPMENT POSTINGS RESTORATION

7. At the EDG rooms ensure barriers are removed from the following entry doors:

_____ a. Door 138-1

_____ b. Door 133-2

_____ c. Door 141-1 to the 4A EDG DOTP area

_____ d. Door 138-2

_____ e. Door 139-1

_____ f. Door 139-2

_____ g. Door 133-1

_____ h. Door 136-1 to the 4B EDG DOTP area

_____ i. Door 133-3

_____ j. Door 135-2

_____ k. Door 134-2

_____ l. Door 140-1

_____ 8. In the control room, ensure any information tags on the RHR, CCW, or ICW pump control switches for designated operating and protected trains are removed.

ATTACHMENT 21
(Page 4 of 4)

UNIT 4 PROTECTED EQUIPMENT POSTINGS RESTORATION

_____ 9. In the Control Room, ensure any protected equipment signs are removed from safeguards racks 4QR42/43/44/45.

_____ 10. In the CCW room, ensure all barriers around the CCW pumps are removed.

_____ 11. At the RHR pump rooms, ensure all barriers to 4A and 4B RHR pumps are removed.

_____ 12. In the CCW room, ensure all barriers around CCW Hxs are removed.

_____ 13. At the Intake, ensure all barriers around the ICW pumps are removed.

_____ 14. At door to the U4 SFP pump room, ensure all barriers are removed from the entrance door and SFP Cooling Heat Exchanger.

_____ 15. At 480V LC Breaker Cubicle 40309 SFP Cooling Pump 4P212A/B, remove stop sign.

Date/Time Completed:_____/_____

PERFORMED BY (Print)	INITIALS
_____	_____
_____	_____
_____	_____

FINAL PAGE

Facility:	Turkey Point	Task No:	
Task Title:	Prepare an ECO for 3C Charging Pump	Job Performance Measure No:	R.A.2
K/A Reference:	G2.2.13 (4.1/4.3)		
Applicant:		NRC Examiner:	
Facility Evaluator:		Date:	

Method of testing: Classroom

Simulated Performance Yes Actual Performance

Classroom Yes Simulator Plant

Read to the applicant:

I will explain the initial conditions, which steps to simulate or discuss, and provide initiating cues. When you complete the task successfully, the objective for this job performance measure will be satisfied.

Initial Conditions:

The plant is in Mode 1. The 3C Charging Pump has developed a significant leak from the suction stabilizer. Maintenance has requested an "Emergency Repair" tagout to repair the leak. The computer is unavailable for generating ECOs.

Task Standard:

The ECO form is completed to the following criteria:

1. All steps marked as critical on the answer key are included on the applicant's form.
2. The step for rackout of breaker 35008 precedes all other steps requiring manipulation of valves.
3. The correct positions of all components on critical steps are included on the applicant's form.
4. At least one vent path and one drain path are properly identified and tagged.

The following listed items are not critical to completion of this ECO:

1. The order of steps following the rackout step of 35008.
2. Equipment Description and Equipment Location wording do not have to exactly match the answer key.
3. The identification of valve 3-275C as being "Lock" close. "Close" will suffice.

Note that valves with "Danger" tags that are not marked critical on the answer key may be included by the applicant to provide vent and drain paths in preparation for maintenance.

Required Materials:

1. PTN Dwg 5613-M-3047, Sheet 2, "Chemical and Volume Control System Charging and Letdown"
2. 0-ADM-212, "In-Plant Equipment Clearance Orders"
3. 0-ADM-212.1, "Operations In-Plant Equipment Clearance Orders"
4. 3-OP-047, CVCS - Charging and Letdown
5. Blank ECO Form
6. Pencil

General References:

1. PTN Dwg 5613-M-3047, Sh 1, CVCS Charging and Letdown
2. PTN Breaker Book
3. ECO 3-047-0001

Initiating Cue:

The Shift Manager has directed you to generate a clearance (ECO) for the 3C Charging Pump to facilitate repairing the leak on the suction stabilizer. Restoration steps are not required.

NOTES: 1. Access to the computer based ECO generating system (NOMS) is not allowed while performing this task.

2. The only materials that may be made available by computer are plant procedures, breaker book and drawings subject to evaluator approval.

3. Provide copies of Required Materials listed above along with JPM Briefing Sheet.

Time Critical Task: No

Validation Time: 30 minutes

INSTRUCTIONS TO APPLICANT

READ TO APPLICANT:
WHEN I TELL YOU TO BEGIN, YOU ARE TO PERFORM THE ACTIONS AS DIRECTED IN THE INITIATING CUES. I WILL DESCRIBE THE GENERAL CONDITIONS UNDER WHICH THIS TASK IS TO BE PERFORMED AND PROVIDE THE NECESSARY TOOLS WITH WHICH TO PERFORM THIS TASK. BEFORE STARTING, I WILL EXPLAIN THE INITIAL CONDITIONS, WHICH STEPS TO SIMULATE OR DISCUSS, AND PROVIDE INITIATING CUES. WHEN YOU COMPLETE THE TASK SUCCESSFULLY, THE OBJECTIVE FOR THIS JOB PERFORMANCE MEASURE WILL BE SATISFIED.

HAND JPM BRIEFING SHEET TO APPLICANT AT THIS TIME!

INITIAL CONDITIONS:

The plant is in Mode 1. The 3C Charging Pump has developed a significant leak from the suction stabilizer. Maintenance has requested an "Emergency Repair" tagout to repair the leak. The computer is unavailable for generating ECOs.

INITIATING CUE:

The Shift Manager has directed you to generate a clearance (ECO) for the 3C Charging Pump to facilitate repairing the leak on the suction stabilizer. Restoration steps are not required.

NOTES:
1. **Access to the computer based ECO generating system (NOMS) is not allowed while performing this task.**
2. **Only computer access of plant procedures, breaker book and drawings is allowed subject to evaluator approval.**
3. **Access to or copies of Required Materials listed above shall be provided along with the JPM Briefing Sheet.**

TERMINATION CUE:

When you feel that you have satisfactorily completed the assigned task, hand your JPM briefing sheet back to me.

Do you have any questions?

You may begin.

Denote critical steps with a check mark (√)

Start Time _____

STEP 1 :	Identify/obtain the necessary reference materials.	____ SAT ____ UNSAT
STANDARDS:	Obtains the requisite reference materials. 1. POD 5613-M-3047, Sheet 2, "Chemical and Volume Control System Charging and Letdown" 2. 0-ADM-212, "In-Plant Equipment Clearance Orders" 3. 0-ADM-212.1, "Operations In-Plant Equipment Clearance Orders" 4. 3-OP-047 5. Blank ECO Form 6. Pencil	

STEP 2 :	Enter 3P201C Control Switch on ECO form.	____ SAT ____ UNSAT
STANDARDS:	1. Enters **"3P201C Control Switch"** in *Equipment ID* Column. 2. Enters **"3C Charging Pump Control Switch"** in *Equipment Description* column. 3. Enters **"Control Room Unit 3 Console"** in *Equipment Location* column. 4. Enters " - " in *Tag Serial Number* column. 5. Enters **"Info. Tag"** in *Tag Type* column. 6. Enters value in *Place Seq.* column. 7. Enters **"Hang Info Tag"** in *Place Config.* column.	
NOTES:	1. *Standards 2, 3, 4 and 6 are not critical to this Step.* 2. *Entries can be done in any order.* 3. *The exact wording shown is not important.*	

STEP 3 : ✓	Enter breaker 35008 on ECO form.	___ SAT ___ UNSAT
STANDARDS:	1. Enters **"35008"** in *Equipment ID* Column. 2. Enters **"480V Breaker (LC 3H) to 3C Charging Pump"** in *Equipment Description* column. 3. Enters **"3H 480V LC - New Electrical Equipment Room "** in *Equipment Location* column. 4. Enters **"1"** in *Tag Serial Number* column. 5. Enters **"Danger"** in *Tag Type* column. 6. Enters value in *Place Seq.* column. 7. Enters **"Rack Breaker Out"** in *Place Config.* column.	
NOTES:	*1. Standards 2, 3 and 4 are not critical to this Step.* *2. Standard 6 is only critical in that sequence should show breaker 35008 racked out before any ECO boundary valves are closed.* *3. Entries can be done in any order.* *4. The exact wording shown is not important.*	

STEP 4 : ✓	Enter valve 3-290 on ECO form	___ SAT ___ UNSAT
STANDARDS:	1. Enters **"3-290"** in *Equipment ID* Column. 2. Enters **"Chg Pmp C Disch Iso Vlv"** in *Equipment Description* column. 3. Enters **"Unit 3 Charging Pump Room"** in *Equipment Location* column. 4. Enters **"2"** in *Tag Serial Number* column. 5. Enters **"Danger"** in *Tag Type* column. 6. Enters value in *Place Seq.* column. 7. Enters **"Close"** in *Place Config.* column.	
NOTES:	*1. Standards 2, 3 and 4 are not critical to this Step.* *2. Entries can be done in any order.* *3. The exact wording shown is not important.* *4. Standard 6 is only critical in that sequence must be after step 3 (rack out breaker) and before step 9 (open vent valve).*	

STEP 5 : ✓	Enter valve 3-291A on ECO form	___ SAT ___ UNSAT
STANDARDS:	1. Enters **"3-291A"** in *Equipment ID* Column. 2. Enters **"Chg Pmp C Disch to Seal Water Inj Iso Vlv"** in *Equipment Description* column. 3. Enters **"Unit 3 Charging Pump Room"** in *Equipment Location* column. 4. Enters **"3"** in *Tag Serial Number* column. 5. Enters **"Danger"** in *Tag Type* column. 6. Enters value in *Place Seq.* column. 7. Enters **"Close"** in *Place Config.* column.	
NOTES:	*1. Standards 2, 3 and 4 are not critical to this Step.* *2. Entries can be done in any order.* *3. The exact wording shown is not important.* *4. Standard 6 is only critical in that sequence must be after step 3 (rack out breaker) and before step 9 (open vent valve).*	

STEP 6 : ✓	Enter valve 3-1317 on ECO form.	___ SAT ___ UNSAT
STANDARDS:	1. Enters **"3-1317"** in *Equipment ID* Column. 2. Enters **"Charging Pump C Recirc Isolation Valve"** in *Equipment Description* column. 3. Enters **"Unit 3 Charging Pump Room"** in *Equipment Location* column. 4. Enters **"4"** in *Tag Serial Number* column. 5. Enters **"Danger"** in *Tag Type* column. 6. Enters value in *Place Seq.* column. 7. Enters **"Close"** in *Place Config.* column.	
NOTES:	*1. Standards 2, 3 and 4 are not critical to this Step.* *2. Entries can be done in any order.* *3. The exact wording shown is not important.* *4. Standard 6 is only critical in that sequence must be after step 3 (rack out breaker) and before step 9 (open vent valve).*	

STEP 7 : ↓	Enter valve 3-275C on ECO form.	___ SAT ___ UNSAT
STANDARDS:	1. Enters **"3-275C"** in *Equipment ID* Column. 2. Enters **"Chg Pmp Relief Line Iso Vlv"** in *Equipment Description* column. 3. Enters **"Unit 3 Charging Pump Room"** in *Equipment Location* column. 4. Enters **"5"** in *Tag Serial Number* column. 5. Enters **"Danger"** in *Tag Type* column. 6. Enters value in *Place Seq.* column. 7. Enters **"Lock Close"** in *Place Config.* column.	
NOTES:	*1. Standards 2, 3 and 4 are not critical to this Step.* *2. Entries can be done in any order.* *3. The exact wording shown is not important.* *4. Standard 6 is only critical in that sequence must be after step 3 (rack out breaker) and before step 9 (open vent valve).*	

STEP 8 : ↓	Enter valve 3-270 on ECO form.	___ SAT ___ UNSAT
STANDARDS:	1. Enters **"3-270"** in *Equipment ID* Column. 2. Enters **"Chg Pmp C Inlet Iso Vlv"** in *Equipment Description* column. 3. Enters **"Unit 3 Charging Pump Room"** in *Equipment Location* column. 4. Enters **"6"** in *Tag Serial Number* column. 5. Enters **"Danger"** in *Tag Type* column. 6. Enters value in *Place Seq.* column. 7. Enters **"Close"** in *Place Config.* column.	
NOTES:	*1. Standards 2, 3 and 4 are not critical to this Step.* *2. Entries can be done in any order.* *3. The exact wording shown is not important.* *4. Standard 6 is only critical in that sequence must be after step 3 (rack out breaker) and before step 9 (open vent valve).*	

STEP 9 :	Enter valve 3-1314 on ECO form.	____ SAT ____ UNSAT
STANDARDS:	1. Enters **"3-1314"** in *Equipment ID* Column. 2. Enters **"Chg Pmp C Suct Stabilizer Vent Iso Vlv"** in *Equipment Description* column. 3. Enters **"Unit 3 Charging Pump Room"** in *Equipment Location* column. 4. Enters **"7"** in *Tag Serial Number* column. 5. Enters **"Danger"** in *Tag Type* column. 6. Enters value in *Place Seq.* column. 7. Enters **"Open"** in *Place Config.* column.	
NOTES:	*1. Standards 2, 3, 4 are not critical to this Step.* *2. Entries can be done in any order.* *3. The exact wording shown is not important.* *4. It is critical that one vent path be danger tagged open. Either steps 9 & 10 OR 11 & 12 must be performed to establish a vent path.* *5. Standard 6 is only critical in that sequence must reflect that this step must occur after steps 2 through 8 have been completed.*	

STEP 10 :	Enter valve 3-3411C on ECO form.	___ SAT ___ UNSAT
STANDARDS:	1. Enters **"3-3411C"** in *Equipment ID* Column. 2. Enters **"Charging Pump C Suction Stabilizer Vent"** in *Equipment Description* column. 3. Enters **"Unit 3 Charging Pump Room"** in *Equipment Location* column. 4. Enters **"8"** in *Tag Serial Number* column. 5. Enters **"Danger"** in *Tag Type* column. 6. Enters value in *Place Seq.* column. 7. Enters **"Open"** in *Place Config.* column.	
NOTES:	*1. Standards 2, 3, 4 and 6 are not critical to this Step.* *2. Entries can be done in any order.* *3. The exact wording shown is not important.* *4. It is critical that one vent path be danger tagged open. Either steps 9 & 10 OR 11 & 12 must be performed to establish a vent path.* *5. Standard 6 is only critical in that sequence must reflect that this step must occur after steps 2 through 8 have been completed.*	

STEP 11 : ↓	Enter valve 3-276C on ECO form.	___ SAT ___ UNSAT
STANDARDS:	1. Enters **"3-276C"** in *Equipment ID* Column. 2. Enters **"Chg Pmp C Disch PI-153 Root Vlv"** in *Equipment Description* column. 3. Enters **"Unit 3 Charging Pump Room"** in *Equipment Location* column. 4. Enters **"9"** in *Tag Serial Number* column. 5. Enters **"Danger"** in *Tag Type* column. 6. Enters value in *Place Seq.* column. 7. Enters **"Open"** in *Place Config.* column.	
NOTES:	*1. Standards 2, 3, 4 and 6 are not critical to this Step.* *2. Entries can be done in any order.* *3. The exact wording shown is not important.* *4. It is critical that one vent path be danger tagged open. Either steps 9 & 10 OR 11 & 12 must be performed to establish a vent path.* *5. Standard 6 is only critical in that sequence must reflect that this step must occur after steps 2 through 8 have been completed.*	

STEP 12 :	Enter valve 3-276F on ECO form.	____ SAT ____ UNSAT
STANDARDS:	1. Enters **"3-276F"** in *Equipment ID* Column. 2. Enters **"Chg Pmp C Disch Line Vnt Vlv"** in *Equipment Description* column. 3. Enters **"Unit 3 Charging Pump Room"** in *Equipment Location* column. 4. Enters **"10"** in *Tag Serial Number* column. 5. Enters **"Danger"** in *Tag Type* column. 6. Enters value in *Place Seq.* column. 7. Enters **"Open"** in *Place Config.* column.	
NOTES:	*1. Standards 2, 3, 4 and 6 are not critical to this Step.* *2. Entries can be done in any order.* *3. The exact wording shown is not important.* *4. It is critical that one vent path be danger tagged open. Either steps 9 & 10 OR 11 & 12 must be performed to establish a vent path.* *5. Standard 6 is only critical in that sequence must reflect that this step must occur after steps 2 through 8 have been completed.*	

STEP 13 :	Enter 3-270B drain line on ECO form.	____ SAT ____ UNSAT
STANDARDS:	1. Enters **"3-270B Hose"** in *Equipment ID* Column. 2. Enters **"Chg Pmp C Suct Stabilizer Drain Hose"** in *Equipment Description* column. 3. Enters **"Unit 3 Charging Pump Room"** in *Equipment Location* column. 4. Enters **" - "** in *Tag Serial Number* column. 5. Enters **"No Tag"** in *Tag Type* column. 6. Enters value in *Place Seq.* column. 7. Enters **"Remove Cap, Install Hose"** in *Place Config.* column.	
NOTES:	*1. Entries can be done in any order.* *2. The exact wording shown is not important.*	

STEP 14 :	Enter valve 3-270B throttled on ECO form.	____ SAT ____ UNSAT
STANDARDS:	1. Enters **"3-270B Throttle"** in *Equipment ID* Column. 2. Enters **"3C Chrg Pump Suct Stab Drn"** in *Equipment Description* column. 3. Enters **"Unit 3 Charging Pump Room"** in *Equipment Location* column. 4. Enters **" - "** in *Tag Serial Number* column. 5. Enters **"No Tag"** in *Tag Type* column. 6. Enters value in *Place Seq.* column. 7. Enters **"Throttle"** in *Place Config.* column. 8. Enters **"Open slowly, don't exceed capacity of drain system"**	
NOTES:	*1. Entries can be done in any order.* *2. The exact wording shown is not important.*	

STEP 15 : ↓	Enter valve 3-270B on ECO form.	___ SAT ___ UNSAT
STANDARDS:	1. Enters **"3-270B"** in *Equipment ID* Column. 2. Enters **"Chg Pmp C Suct Stabilizer Drain Valve"** in *Equipment Description* column. 3. Enters **"Unit 3 Charging Pump Room"** in *Equipment Location* column. 4. Enters **"11"** in *Tag Serial Number* column. 5. Enters **"Danger"** in *Tag Type* column. 6. Enters value in *Place Seq.* column. 7. Enters **"Open"** in *Place Config.* column.	
NOTES:	*1. Standards 2, 3 and 4 are not critical to this Step.* *2. Entries can be done in any order.* *3. The exact wording shown is not important.* *4. Standard 6 is critical only in that it must show this ECO step occurring after the tags for ECO boundary valves and 3C Charging Pump breaker have been hung. The exact number is not critical.*	

Termination Cue:	Applicant returns all completed materials.	**STOP**

Stop Time _____

Verification of Completion

Job Performance Measure No. R.A.2

Applicant's Name: _____

Examiner's Name: _____

Date Performed: _____

Facility Evaluator: _____

Number of Attempts: _____

Time to Complete: _____

Question Documentation:

Question:

_____

_____

_____

_____

_____

Response:

_____

_____

_____

_____

_____

Result: Satisfactory/Unsatisfactory

Examiner's signature and date: _____ _____

JPM BRIEFING SHEET

INITIAL CONDITIONS:

The plant is in Mode 1. The 3C Charging Pump has developed a significant leak from the suction stabilizer. Maintenance has requested an "Emergency Repair" tagout to repair the leak. The computer is unavailable for generating ECOs.

INITIATING CUE:

The Shift Manager has directed you to generate a clearance (ECO) for the 3C Charging Pump to facilitate repairing the leak on the suction stabilizer. Restoration steps are not required.

NOTE: Access to the computer based ECO generating system (NOMS) is not allowed while performing this task.

HAND THIS PAPER BACK TO YOUR EVALUATOR WHEN YOU FEEL THAT YOU HAVE SATISFACTORILY COMPLETED THE ASSIGNED TASK.

ECO FORM

TAG HANG LIST FOR ECO

Equipment ID	Equipment Description	Equipment Location	Tag Serial Number	Tag Type	Place Seq	Place Config	1st	2nd	Notes

ECO FORM

TAG HANG LIST FOR ECO

Equipment ID	Equipment Description	Equipment Location	Tag Serial Number	Tag Type	Place Seq	Place Config	1st	2nd	Notes

ECO FORM

TAG HANG LIST FOR ECO

Equipment ID	Equipment Description	Equipment Location	Tag Serial Number	Tag Type	Place Seq	Place Config	1st	2nd	Notes

ECO FORM - ANSWER KEY

TAG HANG LIST FOR ECO

Equipment ID	Equipment Description	Equipment Location	Tag Serial Number	Tag Type	Place Seq	Place Config	1st	2nd	Notes
3P201C Control Switch	3C CHG PP CNTRL SW	UNIT 3 CONTROL ROOM CONSOLE		INFO TAG	1	HANG INFO TAG			
35008	480V BKR (LC 3H) TO CHG PMP 3C (3P201C)	NEW ELECTRICAL EQUIPMENT ROOM	1	DANGER	2	RACK BREAKER OUT			
3-290	CHG PMP C DISCH ISO VLV	UNIT 3 CHARGING PUMP ROOM	2	DANGER	3	CLOSE			
3-291A	CHG PMP C DISCH TO SEAL WTR INJ ISO VLV	UNIT 3 CHARGING PUMP ROOM	3	DANGER	4	CLOSE			
3-1317	CHARGING PUMP C RECIRC ISOLATION VALVE	UNIT 3 CHARGING PUMP ROOM	4	DANGER	5	CLOSE			
3-275C	CHG PMP C RELIEF LINE ISO VLV	UNIT 3 CHARGING PUMP ROOM	5	DANGER	6	LOCK CLOSE			
3-270	CHG PMP C INLET ISO VLV	UNIT 3 CHARGING PUMP ROOM	6	DANGER	7	CLOSE			
3-1314 *	CHG PMP C SUCT STABLIZER VENT ISO VLV	UNIT 3 CHARGING PUMP ROOM	7	DANGER	8	OPEN			
3-3411C *	CHARGING PUMP C SUCTION STABILIZER VENT	UNIT 3 CHARGING PUMP ROOM	8	DANGER	9	OPEN			
3-276C **	CHG PMP C DISCH PI-153 ROOT VLV	UNIT 3 CHARGING PUMP ROOM	9	DANGER	10	OPEN			
3-276F **	CHG PMP C DISCH LINE VNT VLV	UNIT 3 CHARGING PUMP ROOM	10	DANGER	11	OPEN			
3-270B - HOSE	CHG PMP C SUCT STABILIZER DRAIN HOSE	UNIT 3 CHARGING PUMP ROOM	-	NO TAG	12	REM CAP INS HOSE			
3-270B - THROTTLE	CHG PMP C SUCT STABLIZER DRAIN	UNIT 3 CHARGING PUMP ROOM	-	NO TAG	13	THROTTLE			
3-270B ***	CHG PMP C SUCT STABLIZER DRAIN VALVE	UNIT 3 CHARGING PUMP ROOM	11	DANGER	14	OPEN			

*** At least one vent path (***) and one drain path (***) must be properly identified. Any vent or drain path is allowable and is critical.**

Facility:	Turkey Point	Task No:	02030038300
Task Title:	Determine Required Action For CCW Test	JPM No:	S.A.2
K/A Reference:	2.2.12 SRO 4.1		
Examinee:		NRC Examiner:	
Facility Evaluator:		Date:	

Method of testing: _____

Simulated Performance _____ Actual Performance _____

Classroom X Simulator _____ Plant _____

Read to the examinee:

I will explain the initial conditions, which steps to simulate or discuss, and provide initiating cues. When you complete the task successfully, the objective for this job performance measure will be satisfied.

Initial Conditions:

- Unit 3 and 4 are both Mode 1 100% power.
- No equipment is OOS
- The Quarterly Group A test 3-OSP-030.1 CCW Pump Test has been completed.

Task Standard:

- Determination that the acceptance criteria for 3-OSP-30.1 "Component Cooling Water Pump Inservice Test" is NOT met.
- Determination that 3A CCW pump is INOPERABLE.
- Determination that entry into Technical Specification LCO 3.7.2 a. Action b is required.

Required Materials:

- 3-OSP-030.1 Component Cooling Water Pump Inservice Test

General References:

- Technical Specifications TURKEY POINT - UNITS 3 & 4
- 0-ADM-536 Technical Specification Bases Control Program

Initiating Cue:

- You are an SRO and are required to:

  1.) Complete step 7.1.32.

  2.) Determine any required Technical Specification actions, if any.

  3.) Determine any required notifications and specify any administrative actions, if any.

Time Critical Task: No

Validation Time: 15 minutes

HAND JPM BRIEFING SHEET TO EXAMINEE AT THIS TIME!

SIMULATOR SETUP

Reset to IC #

Load Lesson

Ensure Simulator Operator Checklist is complete

Denote critical steps with a check mark(√)

Start Time _____

STEP 1 :	Obtain a copy of 3-OSP-030.1 Component Cooling Water Pump Inservice Test	___ SAT ___ UNSAT
Standard:	Copy 3-OSP-030.1 Component Cooling Water Pump Inservice Test is obtained.	
Cue	Provide a copy of 3-OSP-030.1 Component Cooling Water Pump Inservice Test	
Comment		
NOTE:		

NOTE:	4.0 PRECAUTIONS/LIMITATIONS 4.1 The Shift Manager shall be notified immediately if any acceptance criteria are not met or any malfunction or abnormal conditions occur. This information shall also be recorded in the Remarks Section of the applicable attachment.	
STEP 2 :	7.1.19 Record the following CCW Pump 3A operating data: 1. A CCW Header Flowrate, FI-3-613A _____ gpm 2. Pump Suction Pressure, IST-3-40 _____ psig 3. Pump Discharge Pressure, IST-3-45 _____ psig 4. Pump Inboard Seal Leakage _____ drops/min 5. Pump Outboard Seal Leakage _____ drops/min 6. Pump Motor Amps (Control Room Panel) _____ amps	____ SAT ____ UNSAT
Standard:	Examinee reviews CCW Pump 3A operating data in step 7.1.19	
Cue		
Comment		
EXAMINER NOTE	See exam key for correct answers.	

NOTE:	**NOTE** *Mounting pads are installed at all points and should be used with a magnet mounted accelerometer.*	
STEP 3 : √	7.1.20 Record the following bearing casing vibration data below at the designated points as shown in Enclosure 1: 1. Pump Outboard Horizontal Vibration _____ in/sec ☐ Acceptable Range: Less than or equal to 0.30 in/sec ☐ Alert Range: Greater than 0.30 to 0.70 in/sec ☐ Required Action Range: Greater than 0.70 in/sec	____ SAT ____ UNSAT
Standard:	Examinee reviews data for 3A CCW Pump Outboard Horizontal Vibration and concurs with the determination that it is outside the Required Action Range	
Cue		
Comment		
EXAMINER NOTE	Outboard Horizontal Vibration is greater than 0.70 in/sec which is outside the Required Action Range of 0.70 in/sec.	
EXAMINER NOTE	See exam key for correct answers.	

STEP 4 :	7.1.20 Record the following bearing casing vibration data below at the designated points as shown in Enclosure 1: 2. Pump Outboard Vertical Vibration _____ in/sec ☐ Acceptable Range: Less than or equal to 0.25 in/sec ☐ Alert Range: Greater than 0.25 to 0.60 in/sec ☐ Required Action Range: Greater than 0.60 in/sec	____ SAT ____ UNSAT
Standard:	Examinee reviews data for 3A CCW Pump Outboard Vertical Vibration as outside the required action range.	
Cue		
Comment		
EXAMINER NOTE	See exam key for correct answers.	

STEP 5 :	7.1.20 Record the following bearing casing vibration data below at the designated points as shown in Enclosure 1: 3. Pump Outboard (Axial) Vibration _____ in/sec ☐ Acceptable Range: Less than or equal to 0.22 in/sec ☐ Alert Range: Greater than 0.22 to 0.54 in/sec ☐ Required Action Range: Greater than 0.54 in/sec	____ SAT ____ UNSAT
Standard:	Examinee reviews data for 3A CCW Pump Outboard Axial Vibration as Acceptable.	
Cue		
Comment		
EXAMINER NOTE	See exam key for correct answers.	

STEP 6 :	7.1.20 Record the following bearing casing vibration data below at the designated points as shown in Enclosure 1: 4. Pump Inboard Horizontal Vibration _____ in/sec ☐ Acceptable Range: Less than or equal to 0.27 in/sec ☐ Alert Range: Greater than 0.27 to 0.66 in/sec ☐ Required Action Range: Greater than 0.66 in/sec	____ SAT ____ UNSAT
Standard:	Examinee reviews data for 3A CCW Pump Inboard Horizontal Vibration as Acceptable.	
Cue		
Comment		
EXAMINER NOTE	See exam key for correct answers.	

STEP 7 : √	7.1.20 Record the following bearing casing vibration data below at the designated points as shown in Enclosure 1: 5. Pump Inboard Vertical Vibration _____ in/sec ☐ Acceptable Range: Less than or equal to 0.30 in/sec ☐ Alert Range: Greater than 0.30 to 0.70 in/sec ☐ Required Action Range: Greater than 0.70 in/sec	____ SAT ____ UNSAT
Standard:	Examinee reviews 3A CCW Pump Inboard Vertical Vibration and makes concurs with determination is in the Alert Range.	
Cue		
Comment		
EXAMINER NOTE	Pump Inboard Vertical Vibration is greater than 0.30 and less than 0.70 in/sec which is in the Alert Range.	
EXAMINER NOTE	See exam key for correct answers.	

STEP 8 :	7.1.20 Record the following bearing casing vibration data below at the designated points as shown in Enclosure 1: 6. Motor Inboard Horizontal _____ in/sec 7. Motor Inboard Vertical _____ in/sec 8. Motor Outboard Horizontal _____ in/sec 9. Motor Outboard Vertical _____ in/sec 10. Motor Outboard Axial _____ in/sec	____ SAT ____ UNSAT
Standard:	Examinee reviews data for 3A CCW Motor vibration in step 7.1.20	
Cue		
Comment		
EXAMINER NOTE	See exam key for correct answers.	

STEP 9 :	7.1.21 Calculate pump differential pressure (dP) as follows: Pump Discharge Pressure IST-3-45 - Pump Suction Pressure IST-3-40 = Pump Differential Pressure psig - psig = psid	____ SAT ____ UNSAT
Standard:	Examinee reviews pump differential pressure (dP) calculation for the 3A CCW pump	
Cue		
Comment		
EXAMINER NOTE	See exam key for correct answers.	

STEP 10 : √	7.1.22 Compare the Pump Total Head to the Acceptance Criteria. (N/A if reference value test.) a. IF this is a Group A test and NOT a reference value test, THEN check the range which applies for the Total Pump Head: ☐ Acceptable Range: 78.93 psid to 96.47 psid ☐ Required Action Range: Less than 78.93 psid or greater than 96.47 psid	____ SAT ____ UNSAT
Standard:	Examinee reviews the Pump Total Head to the acceptance criteria and concurs that the acceptance criteria is NOT met	
Cue		
Comment		
EXAMINER NOTE	Pump Total Head is 78 psid which is outside the acceptable range. Range: Less than 78.93 psid or greater than 96.47 psid	
EXAMINER NOTE	See exam key for correct answers.	

NOTE:	4.0 PRECAUTIONS/LIMITATIONS 4.1 The Shift Manager shall be notified immediately if any acceptance criteria are not met or any malfunction or abnormal conditions occur. This information shall also be recorded in the Remarks Section of the applicable attachment.	
STEP 11 :	Shift Manager notification.	___ SAT ___ UNSAT
Standard:	Examinee notifies Shift Manager.	
Cue	If the examinee notifies Shift Manager, acknowledge communication.	
Comment		

STEP 12 : √	Unsatisfactory Test Verification	___ SAT ___ UNSAT
Standard:	Examinee determines the test completion as unsatisfactory	
Cue	If the Examinee stops the performance of the surveillance to address administrative functions, (generating a WO, CR, etc...) acknowledge the communication and inform the Examinee "Complete the remaining portions of the surveillance."	
Comment		

NOTE:

6.0 ACCEPTANCE CRITERIA

6.1 The required actions as a function of the measured pump test parameter are as follows for all tests except a reference value test which will establish new ranges.

Test Parameter	Required Actions
In the Acceptable Range	• Test is SAT.
In the Alert Range	• Generate CR. • Double the testing frequency.
In the Required Action Range	• Declare the pump inoperable. • Generate WR to correct deficiency. • Generate CR to determine maintenance rule implications

STEP 13 : √

Acceptance Criteria Verification:

Alert Range : Generate a CR

Required Action Range:

Declare the pump inoperable.

Generate a Work request

Generate a CR to determine Maintenance Rule Implications

___ SAT

___ UNSAT

Standard: Examinee determines the test is in the required action range.

Cue: If the Examinee stops the performance of the surveillance to address administrative functions, (generating a WO, CR, etc…) acknowledge the communication and inform the Examinee "Complete the remaining portions of the surveillance."

Comment:

STEP 14 : √	Declare 3A CCW pump INOPERABLE and enter LCO 3.7.2 Action b	___ SAT ___ UNSAT
Standard:	Examinee declares 3A CCW pump INOPERABLE and enters LCO 3.7.2 Action b.	
Cue		
Comment		
NOTE:	3.7.2 The Component Cooling Water System (CCW) shall be OPERABLE with: a. Three CCW pumps, and b. Two CCW heat exchangers. APPLICABILITY: MODES 1, 2, 3, and 4. ACTION: b. With only one CCW pump OPERABLE or with two CCW pumps OPERABLE but not from independent power supplies, restore two pumps from independent power supplies to OPERABLE status within 72 hours or be in HOT STANDBY within the next 6 hours and in COLD SHUTDOWN within the following 30 hours.	

STEP 15 : √	Determine the 0-ADM-115 Reporting requirements	___ SAT ___ UNSAT
Standard:	Determines the reporting requirements for entry into a 72 hr LCO is An Enclosure 2 notification of plant management and the NRC.	
Cue		
Comment	Required by 0-ADM-115, Enclosure 2, item 8.	

Terminating Cue:	The task is complete when the Examinee returns the cue sheet to the examiner.	STOP

Stop Time _____

Verification of Completion

Job Performance Measure No. S.A.2.a

Examinee's Name: _____

Examiner's Name: _____

Date Performed: _____

Facility Evaluator: _____

Number of Attempts: _____

Time to Complete: _____

Question Documentation:

Question:

_____

_____

_____

_____

_____

Response:

_____

_____

_____

_____

_____

Result: Satisfactory/Unsatisfactory

Examiner's signature and date: _____ _____

JPM BRIEFING SHEET

The examiner will explain the initial conditions, which steps to simulate or discuss, and provide initiating cues. When you complete the task successfully, the objective for this job performance measure will be satisfied.

INITIAL CONDITIONS:

- Unit 3 and 4 are both Mode 1 100% power.
- No equipment is OOS
- All 3-OSP-30.1 "Component Cooling Water Pump Inservice Test" prerequisites have been met.

INITIATING CUE:

Initiating Cue:

- You are an SRO and are required to:

    1.) Complete step 7.1.32.

    2.) Determine any required Technical Specification actions, if any.

    3.) Determine any required notifications and specify any administrative actions, if any.

Acknowledge to the examiner when you are ready to begin.

HAND THIS PAPER BACK TO YOUR EVALUATOR WHEN YOU HAVE SATISFACTORILY COMPLETED THE ASSIGNED TASK.

Florida Power & Light Company

Turkey Point Nuclear Plant

Unit 3

This procedure may be affected by an O.T.S.C. (On The Spot Change) verify information prior to use.
Date verified 10/24/10 *Initials* [illegible]

3-OSP-030.1

CAUTION

Performance of this procedure may affect core reactivity.

Title:

Component Cooling Water Pump Inservice Test

(Continuous Use)

Safety Related Procedure

Responsible Department:	Engineering
Revision Approval Date:	5/4/10

PCRs *09-0429, 08-3722, 09-3816, 10-1264, 10-1438*
RTSs *87-0292, 87-1865, 88-2038, 89-1795, 89-2961, 90-1297, 90-1257, 90-2336, 92-0815, 93-1572P, 94-0120P, 95-0993, 96-1009, 96-0358P, 97-0833P, 98-1283, 02-0201P, 02-0468P, 03-0782P, 03-0843, 04-0013P, 04-0543P, 05-0014P, 06-0554P, 07-0288P, 07-0916P*
OTSCs *7510, 9093, 9795, 9848, 10125, 10358, 0442-93, 0567-93, 0275-95, 0774-95, 0197-98, 0243-00, 0290-00, 0214-01, 0219-03, 0201-06*

W97:JRM/ln/cls/cls

LIST OF EFFECTIVE PAGES

Page	Revision Date	Page	Revision Date
1	05/04/10	26	05/04/10
2	05/04/10	27	05/04/10
3	12/18/06	28	06/08/09
4	04/26/10	29	06/08/09
5	12/07/04C	30	12/07/04
6	04/26/10	31	12/07/04
7	04/26/10	32	12/18/06
8	12/18/06	33	12/07/04
9	12/18/06	34	12/07/04
10	12/07/04	35	06/08/09
11	06/08/09	36	12/18/06
12	12/07/04	37	03/09/09
13	12/07/04	38	03/09/09
14	06/08/09	39	06/08/09
15	12/18/06	40	06/08/09
16	12/03/07	41	12/07/04
17	04/30/07	42	12/07/04
18	12/07/04	43	12/07/04
19	06/08/09	44	12/07/04
20	12/07/04	45	12/07/04
21	12/18/06	46	12/07/04
22	12/07/04	47	12/01/09
23	12/07/04	48	05/04/10
24	06/08/09	49	03/09/09
25	12/18/06	50	12/18/06

TABLE OF CONTENTS

	Section	Page
1.0	PURPOSE	4
2.0	REFERENCES/RECORDS REQUIRED/ COMMITMENT DOCUMENTS	4
3.0	PREREQUISITES	6
4.0	PRECAUTIONS/LIMITATIONS	7
5.0	SPECIAL TOOLS/EQUIPMENT	8
6.0	ACCEPTANCE CRITERIA	8
7.0	PROCEDURE	
	7.1 CCW Pump 3A Test	9
	7.2 CCW Pump 3B Test	21
	7.3 CCW Pump 3C Test	32
	ENCLOSURE/ATTACHMENTS	
	Enclosure 1	
	Component Cooling Water Pump Vibration Monitoring Locations	43
	Attachment 1	
	Pump Reference Value Evaluation Sheet	47
	Attachment 2	
	Temporary Modification for Performing CCW Pump 3B Test	50

1.0 PURPOSE

1.1 This procedure provides instructional guidance for the inservice testing or post maintenance pump test of the Component Cooling Water Systems to meet the surveillance requirements of References 2.1.1 and 2.1.2.

1.2 This procedure performs the required Group A tests of the Component Cooling Water pumps in accordance with the ASME OM Code, Subsection ISTB.

1.3 This procedure performs the required valve exercise tests in accordance with the ASME OM Code, Subsection ISTC.

2.0 REFERENCES/RECORDS REQUIRED/COMMITMENT DOCUMENTS

2.1 References

2.1.1 Technical Specifications

1. Section 4.0.5
2. Section 3.7.2

2.1.2 FSAR

1. Section 6, Engineered Safety Features
2. Section 9, Auxiliary and Emergency Systems

2.1.3 Operating Diagrams

1. 5613-M-3030, Sht 1, 2, 3, 4, and 5, Unit 3 Component Cooling Water System

2.1.4 Operating Procedures

1. 0-ADM-215, Plant Surveillance Tracking Program
2. 0-ADM-737, Post Maintenance Testing
3. 3-NOP-030, Component Cooling Water System
4. 3-OP-050, Residual Heat Removal System
5. 0-OSP-200.1, Schedule of Plant Checks and Surveillances

2.1.5 Miscellaneous Documents (i.e., PC/Ms, Correspondence)

1. Condition Report 95-935
2. JPN-PTN-SENP-95-026, Rev 2, Safety Evaluation for CCW Flow Balance and Post-Accident Alignment Requirements to Support Current and Uprated Conditions
3. Fourth Ten-Year Inservice Inspection Interval Inservice Testing Program for Pumps and Valves

2.1.5 (Cont'd)

4. CR 02-0121, PM 02-03-002, Incorporate Acceptance Criteria into all procedures used to Test Pumps in the IST Program.

2.1.6 Regulatory Guidelines

1. ASME OM Code 1998 Edition through 2000 Addenda, Subsection ISTB, Inservice Testing of Pumps in Light-Water Reactor Nuclear Power Plants

2. ASME OM Code 1998 Edition through 2000 Addenda, Subsection ISTC, Inservice Testing of Valves in Light-Water Reactor Nuclear Power Plants

2.2 Records Required

2.2.1 The date, time and section completed shall be entered in the Unit Narrative Log. Also, problems encountered while performing the procedure should be entered; i.e., malfunctioning equipment, delays due to changes in plant conditions, etc.

2.2.2 Prior to routing to QA Records, completed Subsections 7.1, 7.2 and 7.3 and Attachment 1 shall be routed to the IST Coordinator for analysis and evaluation.

2.2.3 Completed copies of the below listed items document compliance with Technical Specification surveillance requirements and shall be transmitted to QA Records for retention in accordance with Quality Assurance Records Program requirements:

1. Subsection 7.1

2. Subsection 7.2

3. Subsection 7.3

4. Attachment 1

5. Attachment 2

2.3 Commitment Documents

2.3.1 FPL letter from T. F. Plunkett to NRC L-90-389 dated November 13, 1990 LER 250-90-021, CCW System Split Header Configuration.

2.3.2 JPN-PTN-SENP-95-026, Safety Evaluation for CCW Flow Balance and Post Accident Alignment Requirements to Support Current and Uprated Conditions (LER 250/95-006)

2.3.3 FPL letter from T.O. Jones to NRC L-2003-226 dated September 17, 2003, LER 2003-009-00, Component Cooling Water System Configuration Outside Technical Specifications

3.0 PREREQUISITES

3.1 The Component Cooling Water System is aligned for normal operation per 3-NOP-030, Component Cooling Water System.

3.2 No major activities are in progress or planned that would affect the ability to perform this test.

3.3 All instruments and control devices are in service for the CCW System operation with no surveillances required and no outstanding PWOs, clearances, or Temporary System Alterations that affect system operability as per the following:

3.3.1 0-ADM-215 Plant Surveillance Tracking Program and 0-OSP-200.1, Schedule of Plant Checks and Surveillances. (No surveillances have exceeded the date required on the surveillance use of grace sheet.)

3.3.2 Temporary System Alterations (TSA) Log

3.3.3 Clearance Log

3.3.4 Out-of-Service Log

3.4 The test equipment required to perform this test is available.

3.5 Notifications have been made to ensure this test has been included in planning per 0-ADM-215, Plant Surveillance Tracking Program.

3.6 The 3A, 3B, and 3C Component Cooling Water Heat Exchangers are in service. [Commitment - Step 2.3.2]

3.7 Component Cooling Water Pumps 3A, 3B, and 3C are operable (except where test is performed following pump maintenance).

3.8 All Unit 3 Emergency Containment Coolers are operable.

3.9 Both Emergency Diesel Generators are operable.

3.10 Unit 3 is in Mode 1, 2, or 3 prior to commencing this test.

4.0 PRECAUTIONS/LIMITATIONS

4.1 The Shift Manager shall be notified immediately if any acceptance criteria are not met or any malfunction or abnormal conditions occur. This information shall also be recorded in the Remarks Section of the applicable attachment.

4.2 A dedicated operator shall be assigned to assist with this test to restore the system to normal at the direction of the test coordinator or the Shift Manager in the case of an emergency, abnormal temperatures associated with the CCW System, or any other reason to abort the test.

4.3 The CCW System shall be operable with two CCW pumps aligned to independent 4160 Volt power supplies, a third CCW pump aligned to either of those 4160 Volt power supplies and 3 CCW Heat Exchangers in Modes 1 through 4. When CCW Pump 3B is not operable and Subsection 7.2 is being performed to demonstrate operability of CCW Pump 3B, the 3D 4160V Bus shall be aligned to 3B 4160V Bus.

4.4 With the CCW System headers split in Modes 1 through 4, either the 3B or 3C CCW pump must remain operable to ensure Technical Specification 3.7.2, Limiting Condition for Operation, is met. This requirement is based on two CCW Heat Exchangers along with the 3B and 3C CCW pumps being aligned to the B CCW header. [Commitment – Step 2.3.3]

4.5 CCW flowrate through any one CCW heat exchanger shall not exceed 6840 gpm, as indicated by FI-3-613A and FI-3-613B. (Refer to JPN-PTN-SENP-95-026.)

4.6 CCW pump operation at less than 3235 gpm per pump should be minimized.

4.7 During operation of two pumps with the headers cross-tied, ECC single unit operation should be avoided to prevent unacceptable high flow through the ECC.

4.8 System alignments should be performed as specified to prevent unintentional or accidental isolation of components.

4.9 Pump operation shall be maintained within the limits as specified in the body of the procedure.

4.10 After a pump has been replaced, a new set or sets of reference values shall be determined from the results of the first inservice test. When a reference value or set of values may have been affected by repair or routine servicing of the pump, a new reference value or set of reference values shall be determined or the previous value reconfirmed by an inservice test run prior to returning the pump to normal service.

4.11 When performing valve manipulations for splitting the CCW Headers, the applicable Technical Specification action statement for one inoperable emergency containment cooler and one RHR Heat Exchanger should be entered. Refer to Technical Specifications for appropriate LCO requirements. [Commitment - Step 2.3.1]

4.12 Swapping of the CCW pumps should be performed in accordance with 3-NOP-030, Component Cooling Water System.

4.13 RCP Thermal Barrier Cooling Water Low Flow (A-1/3) and RCP Motor Bearing Cooling Water Low Flow (H-9/5) may be received when either MOV-3-749A or MOV-3-749B is open or during the operation of an ECC outlet valve with only one CCW pump running on the aligned header. No operability concern exists.

4.14 3A CCW pump should be tested first if 3B and 3C CCW pumps are operable. This will avoid unnecessary valve manipulations if another CCW pump is to be tested.

4.15 In the event of a valid SI signal, MOV-3-749A and MOV-3-749B shall be returned to the CLOSED position, CCW headers cross-tied as soon as practical, and the control switch for the 3A ECC placed in the required position.

5.0 SPECIAL TOOLS/EQUIPMENT

5.1 Calibrated Vibration Instrument and Probe

6.0 ACCEPTANCE CRITERIA

6.1 The required actions as a function of the measured pump test parameter are as follows for all tests except a reference value test which will establish new ranges.

Test Parameter	Required Actions
In the Acceptable Range	• Test is SAT.
In the Alert Range	• Generate CR. • Double the testing frequency.
In the Required Action Range	• Declare the pump inoperable. • Generate WR to correct deficiency. • Generate CR to determine maintenance rule implications.

6.2 The IST Coordinator or designee shall provide appropriate pump acceptance criteria.

6.3 When new reference values are being determined, the test data shall be evaluated and deviations between the previous and new set of reference values identified and verification that the new values represent acceptable pump operation shall be documented. (See Attachment 1.)

7.0 PROCEDURE

CAUTION

If CCW Pump 3A is to be tested following a satisfactory test of CCW Pump 3B or 3C, ensure the CCW System is cross-tied to preclude an auto start signal of the idle CCW pump.

7.1 CCW Pump 3A Test

INITIALS
CK'D VERIF

Date/Time Started: 10/24/10 / 10:30

7.1.1 Pump test acceptance criteria based on reference test performed on 3-15-01.

KO 7.1.2 Obtain permission from the Shift Manager to perform this test.

MM 7.1.3 Inform the RO of the intent to test the CCW Pump 3A.

7.1.4 Indicate below the reason for performing this test

✓ Quarterly Group A Pump IST Test
____ Increased Surveillance
____ Reference Value Test
____ Biannual Comprehensive Test
____ Other (Specify)_____
____ Post Maintenance Test (WO #) _____
____ Maintenance Performed: _____

7.1.5 Record the test equipment numbers and calibration due dates below:

Instrument	Test Equipment No.	Cal Due Date
CCW Pump 3A Suct. Press	IST-3-40	10-31-10
CCW Pump 3A Disch. Press	IST-3-45	01-17-11
A CCW Header Flow	FI-3-613A	10-31-10
B CCW Header Flow	FI-3-613B	10-31-10
Vibration Instrument	T957 A	12-5-10
Vibration Probe	T 957 5A	12-5-10

MM 7.1.6 Verify the calibrations of all Test Instruments are current.

INITIALS
CK'D VERIF

7.1.7 Open or verify open the following valves:

1. CCW Pump A Inlet, 3-701A
2. CCW Pump A Discharge, 3-703A
3. CCW Pump B Inlet, 3-701B
4. CCW Pump B Discharge, 3-703B
5. CCW Pump C Inlet, 3-701C
6. CCW Pump C Discharge, 3-703C
7. CCW Hx A Inlet, 3-712A
8. CCW Hx A Outlet, 3-713A
9. CCW Hx B Inlet, 3-712B
10. CCW Hx B Outlet, 3-713B
11. CCW Hx C Inlet, 3-712C
12. CCW Hx C Outlet, 3-713C
13. CCW Pump Suction Hdr Sectionalizing, 3-787B
14. CCW Pump Discharge Hdr Sectionalizing, 3-787D
15. CCW Hx Outlet Hdr Sectionalizing, 3-787G
16. CCW Hx Outlet Hdr Sectionalizing, 3-787H
17. CCW Hx Outlet Hdr Sectionalizing, 3-787E
18. CCW Pump Discharge Sectionalizing, 3-787C

INITIALS
CK'D VERIF

7.1.8 Verify three heat exchangers are in service.

NOTES

Verification that CCW Pump 3A total flow is greater than or equal to 8000 gpm satisfies the full-stroke exercise requirement for the CCW Pump 3A Discharge Check Valve, 3-702A.

To prevent exceeding the maximum flowrates on the CCW Heat Exchangers, the number of operating CCW pumps should be one less than the number of operable CCW Heat Exchangers.

7.1.9 Perform the full-stroke exercise of CCW Pump 3A Discharge Check Valve, 3-702A, as follows:

1. Verify that the 3A, 3B, and 3C Emergency Containment Coolers are not running.
2. Verify closed CCW to RHR HX 3A Isol Vlv, MOV-3-749A.
3. Verify closed CCW to RHR HX 3B Isol Vlv, MOV-3-749B.
4. Start or verify CCW Pump 3A running in accordance with 3-NOP-030, Component Cooling Water System.
5. Stop or verify not running CCW Pump 3B.
6. Stop or verify not running CCW Pump 3C.
7. Obtain CCW Pump 3A total flow as follows:

   FI-3-613A/ERDADS 6500 gpm
   FI-3-613B/ERDADS _____ gpm

   CCW Pump 3A Total Flow = 6500 gpm

8. Verify total flow is greater than or equal to 8000 gpm. (N/A if 8000 gpm cannot be obtained.)

INITIALS
CK'D VERIF

7.1.9 (Cont'd)

9. **IF** 8000 gpm cannot be obtained, **THEN** perform the following:

a. Manually throttle open CCW to RHR HX 3B Isol Vlv, MOV-3-749B to obtain a total CCW Header flow of 8000 gpm.

b. Record CCW Pump 3A total flow as follows:

FI-3-613A/ERDADS 8050 gpm
FI-3-613B/ERDADS _____ gpm

CCW Pump 3A Total Flow = 8050 gpm

c. Verify total flow is greater than or equal to 8000 gpm.

d. Close CCW to RHR HX 3B Isol Vlv, MOV-3-749B, using the control switch.

7.1.10 Open or verify open the following valves:

1. CCW Pump A Suction Pressure Root Vlv to PI-3-1095A and IST-3-40, 3-701D
2. IST-3-40 Isol, 3-701R
3. IST-3-45 Isol, 3-704F

7.1.11 Vent CCW Pump 3A suction (IST-3-40) pressure gauges as follows:

1. Verify IST-3-40 Vent Valve, 3-1012, closed.
2. Uncap IST-3-40 Vent Valve, 3-1012.
3. Vent IST-3-40 by opening IST-3-40 Vent Valve, 3-1012, until a steady stream of water is emitted.
4. Close IST-3-40 Vent Valve, 3-1012.
5. Replace cap on IST-3-40 Vent Valve, 3-1012.
6. Record suction pressure (IST-3-40) 49.5 psig.

INITIALS
CK'D VERIF

CAUTION

Total Flow on CCW Header A shall not exceed 6500 gpm during this test.

7.1.12 Perform the following to verify or align the Charging Pumps, Spent Fuel Pit Hx, Non-Regen Hx, and Seal Water Hx to the **A** CCW Header:

1. Open or verify open CCW Hdr **A** Supply to Charging Pumps, Spent Fuel Pit Hx, Non-Regen Hx, and Seal Water Hx, 3-835F.
2. Open or verify open CCW Hdr **A** Return from Charging Pumps, Spent Fuel Pit Hx, Non-Regen Hx, and Seal Water Hx, 3-835G.
3. Close or verify closed CCW Hdr **B** Return from Charging Pumps, Spent Fuel Pit Hx, Non-Regen Hx, and Seal Water Hx, 3-835H
4. Close or verify closed CCW Hdr **B** Supply to Charging Pumps, Spent Fuel Pit Hx, Non-Regen Hx, and Seal Water Hx, 3-835E.

CAUTION

MOV-3-749A shall be closed prior to splitting CCW Headers.

7.1.13 Verify RHR is **NOT** required for cooldown, **THEN** perform the following steps:

1. Verify RCS temperature is greater than 350°F.
2. Verify closed MOV-3-749A.
3. Verify closed MOV-3-749B.

INITIALS
CK'D VERIF

NOTE

To prevent exceeding the maximum flowrates on the CCW Heat Exchangers, the number of operating CCW pumps should be one less than the number of operable CCW Heat Exchangers.

7.1.14 Align the CCW Pump 3A to the **A** Header and CCW Pumps 3B and 3C to the **B** CCW header as follows:

NH 1. Open or verify open CCW Pump Suction Hdr Sectionalizing, 3-787B.

NH 2. Open or verify open CCW Pump Discharge Hdr Sectionalizing, 3-787D.

NH 3. Open or verify open CCW Hx Outlet Hdr Sectionalizing, 3-787G.

NH 4. Open or verify open CCW Hx Outlet Hdr Sectionalizing, 3-787H.

NH 5. Start or verify CCW Pump 3A running in accordance with 3-NOP-030, Component Cooling Water System.

NH 6. Start or verify CCW Pump 3B or 3C running in accordance with 3-NOP-030, Component Cooling Water System.

NH 7. Stop or verify the other CCW Pump (3B or 3C) aligned to the **B** header is not running.

NH 8. Notify the Shift Manager that the following Substeps 7.1.14.9 and 7.1.14.10 will place the Unit in a Technical Specification action statement for the **3A** ECC and **3A** RHR Hx being inoperable **AND** should be logged in the EOOS Logbook. (N/A if notified during performance of Subsection 7.2 or 7.3.)

NH 9. Close or verify closed CCW Hx Outlet Hdr Sectionalizing, 3-787E.

NH 10. Close or verify closed CCW Pump Discharge Sectionalizing, 3-787C.

INITIALS
CK'D VERIF

7.1.14 (Cont'd)

NOTE

The Shift Manager shall be notified for appropriate action if A CCW Header flowrate is greater than 6500 gpm.

11. Start the 3A ECC.

12. Verify A CCW Header flowrate, as indicated on a CCW Hdr flow indicator, FI-3-613A, is less than 6500 gpm.

7.1.15 Manually throttle open 3A RHR Hx Comp Cooling Outlet, MOV-749A, to obtain 6500 gpm flowrate indicated on A CCW Hdr Flow, FI-3-613A.

7.1.16 Record the time 6500 gpm flowrate was established. 16:45 AM/PM

7.1.17 Verify 5 minutes have elapsed since 6500 gpm flowrate was established.

7.1.18 Verify open CCW Pump A Discharge Pressure Root Valve to PI-3-640A and IST-3-45, 3-704A, just prior to recording CCW Pump 3A operating data (Step 7.1.19) to ensure adequate communications with the respective flow stream.

7.1.19 Record the following CCW Pump 3A operating data:

1. A CCW Header Flowrate, FI-3-613A	6500 gpm
2. Pump Suction Pressure, IST-3-40	49.5 psig
3. Pump Discharge Pressure, IST-3-45	127.5 psig
4. Pump Inboard Seal Leakage	15 drops/min
5. Pump Outboard Seal Leakage	14 drops/min
6. Pump Motor Amps (Control Room Panel)	48 amps

INITIALS
CK'D VERIF

NOTE

Mounting pads are installed at all points and should be used with a magnet mounted accelerometer.

7.1.20 Record the following bearing casing vibration data below at the designated points as shown in Enclosure 1:

1. Pump Outboard Horizontal Vibration — .76652 in/sec
   - ☐ Acceptable Range: Less than or equal to 0.30 in/sec
   - ☐ Alert Range: Greater than 0.30 to 0.70 in/sec
   - ☑ Required Action Range: Greater than 0.70 in/sec
2. Pump Outboard Vertical Vibration — .06958 in/sec
   - ☐ Acceptable Range: Less than or equal to 0.25 in/sec
   - ☐ Alert Range: Greater than 0.25 to 0.60 in/sec
   - ☑ Required Action Range: Greater than 0.60 in/sec
3. Pump Outboard (Axial) Vibration — .06675 in/sec
   - ☑ Acceptable Range: Less than or equal to 0.22 in/sec
   - ☐ Alert Range: Greater than 0.22 to 0.54 in/sec
   - ☐ Required Action Range: Greater than 0.54 in/sec
4. Pump Inboard Horizontal Vibration — 0.1025 in/sec
   - ☑ Acceptable Range: Less than or equal to 0.27 in/sec
   - ☐ Alert Range: Greater than 0.27 to 0.66 in/sec
   - ☐ Required Action Range: Greater than 0.66 in/sec
5. Pump Inboard Vertical Vibration — 0.3897 in/sec
   - ☐ Acceptable Range: Less than or equal to 0.30 in/sec
   - ☑ Alert Range: Greater than 0.30 to 0.70 in/sec
   - ☐ Required Action Range: Greater than 0.70 in/sec
6. Motor Inboard Horizontal — 0.1065 in/sec
7. Motor Inboard Vertical — .04832 in/sec
8. Motor Outboard Horizontal — 0.06944 in/sec
9. Motor Outboard Vertical — 0.03119 in/sec
10. Motor Outboard Axial — 0.03125 in/sec

INITIALS
CK'D VERIF

7.1.21 Calculate pump differential pressure (dP) as follows:

Pump Discharge Pressure IST-3-45	-	Pump Suction Pressure IST-3-40	=	Pump Differential Pressure
127.5 psig	-	49.5 psig	=	78 psid

7.1.22 Compare the Pump Total Head to the Acceptance Criteria. (N/A if reference value test.)

a. **IF** this is a Group A test and NOT a reference value test, **THEN** check the range which applies for the Total Pump Head:

- ☐ Acceptable Range: 78.93 psid to 96.47 psid
- ☑ Required Action Range: Less than 78.93 psid or greater than 96.47 psid

b. **IF** this is a Comprehensive test and NOT a reference value test, **THEN** check the range which applies for the Total Pump Head:

- ☐ Acceptable Range: 81.57 psid to 90.33 psid
- ☐ Alert Level Range: 78.93 psid to less than 81.57 psid
- ☐ Required Action Range: Less than 78.93 psid or greater than 90.33 psid

7.1.23 **IF** this is a reference value test, **THEN** complete Attachment 1 **AND** have the test data/results evaluated by the IST Coordinator or designee to ensure they are reasonable and represent acceptable pump operation prior to declaring pump operable.

7.1.24 Close or verify closed, the following valves to isolate the IST gauges:

1. IST-3-40 Isol, 3-701R
2. IST-3-45 Isol, 3-704F

7.1.25 Open or verify open, the following valves to ensure the Pump Instrumentation gauges are in service:

1. PI-3-1095A Isol, 3-701P
2. PI-3-1095A and IST-3-40 Isol, 3-701D
3. PI-3-640A Isol, 3-704E

INITIALS
CK'D VERIF

7.1.26 Restore CCW A Header as follows:

1. Close 3A RHR Hx Comp Cooling Outlet, MOV-749A, with the Control Switch.
2. Stop the 3A ECC by placing the control switch STOP.
3. Place the control switch for 3A ECC in AUTO.
4. Verify 3A RHR Hx Comp Cooling Outlet MOV-749A, closed.

7.1.27 Return RHR System to required configuration using 3-OP-050, RESIDUAL HEAT REMOVAL SYSTEM, **OR** as required by the remainder of this procedure.

NOTE

To avoid unnecessary valve manipulations if another CCW pump is to be tested at this time, the following restoration steps (Steps 7.1.28, 7.1.29 and 7.1.30) should be omitted and marked N/A.

7.1.28 Restore the CCW System to normal configuration as follows:

1. Open or verify open, CCW Hx Outlet Hdr Sectionalizing, 3-787E.
2. Open or verify open, CCW Hx Outlet Hdr Sectionalizing, 3-787G.
3. Open or verify open, CCW Pump Discharge Sectionalizing, 3-787C.
4. Open or verify open, CCW Pump Discharge Sectionalizing, 3-787D.

INITIALS
CK'D VERIF

7.1.29 Perform the closure test of CCW Pump **3A** Discharge Check Valve, 3-702A as follows:

1. Verify open CCW Pump Discharge Sectionalizing Valve, 3-787C.
2. Verify open CCW Pump Discharge Sectionalizing Valve, 3-787D.
3. Verify running or start CCW Pump 3B or 3C in accordance with 3-NOP-030, Component Cooling Water System.
4. Stop or verify CCW Pump 3A, OFF.

> **NOTE**
>
> *Verification that CCW Pump 3A is not rotating satisfies the exercise closure test of CCW Pump 3A Discharge Check Valve, 3-702A.*

5. Observe no rotation of the CCW Pump 3A shaft to verify closure of CCW Pump **3A** Discharge Check Valve, 3-702A.

7.1.30 Re-align the non-essential loads to the **B** CCW header as follows: (Mark N/A if not applicable)

1. Open CCW Hdr B Supply to Charging Pumps, Spent Fuel Pit Hx, Non-Regen Hx, and Seal Water Hx, 3-835E.
2. Open CCW Hdr B Return from Charging Pumps, Spent Fuel Pit Hx, Non-Regen Hx, and Seal Water Hx, 3-835H.
3. Close CCW Hdr A Return from Charging Pumps, Spent Fuel Pit Hx, Non-Regen Hx, and Seal Water Hx, 3-835G.
4. Close CCW Hdr A Supply to Charging Pumps, Spent Fuel Pit Hx, Non-Regen Hx, and Seal Water Hx, 3-835F.

7.1.31 Obtain names and initials of all personnel involved in test performance thus far in the PERFORMED BY blanks of this subsection.

INITIALS
CK'D VERIF

NOTE

If another pump test is required, the applicable subsection should be started at this time to prevent prolonged system operation with the test configuration.

7.1.32 Complete the following:

Testing of CCW Pump 3A and related valves is complete and tested components are

Satisfactory _____ Unsatisfactory _____

____ 7.1.33 Inform the RO that the testing of CCW Pump 3A and related valves (Subsection 7.1) is complete **AND** to log the test as specified in Subsection 2.2.

____ 7.1.34 Notify the Shift Manager of completion of the CCW Pump 3A test and the results of the data analysis.

____ 7.1.35 Verify Log entries specified in Subsection 2.2, have been recorded.

REMARKS: _____

Date/Time Completed: _____

PERFORMED BY (Print)	INITIALS
D. Drinkard	DD
Harlow Cameron	HC
A. Grace	AG

REVIEWED BY: _____ _____
Shift Manager *Date*

REVIEWED BY: _____ _____
IST Coordinator *Date*

SA2 KEY

Florida Power & Light Company

Turkey Point Nuclear Plant

Unit 3

This procedure may be affected by an O.T.S.C. (On The Spot Change) verify information prior to use.
Date verified 10/24/10 Initials [illegible]

3-OSP-030.1

CAUTION

Performance of this procedure may affect core reactivity.

Title:

Component Cooling Water Pump Inservice Test

(Continuous Use)

Safety Related Procedure

Responsible Department:	Engineering
Revision Approval Date:	5/4/10

PCRs *09-0429, 08-3722, 09-3816, 10-1264, 10-1438*
RTSs *87-0292, 87-1865, 88-2038, 89-1795, 89-2961, 90-1297, 90-1257, 90-2336, 92-0815, 93-1572P, 94-0120P, 95-0993, 96-1009, 96-0358P, 97-0833P, 98-1283, 02-0201P, 02-0468P, 03-0782P, 03-0843, 04-0013P, 04-0543P, 05-0014P, 06-0554P, 07-0288P, 07-0916P*
OTSCs *7510, 9093, 9795, 9848, 10125, 10358, 0442-93, 0567-93, 0275-95, 0774-95, 0197-98, 0243-00, 0290-00, 0214-01, 0219-03, 0201-06*

W97:JRM/ln/cls/cls

LIST OF EFFECTIVE PAGES

Page	Revision Date	Page	Revision Date
1	05/04/10	26	05/04/10
2	05/04/10	27	05/04/10
3	12/18/06	28	06/08/09
4	04/26/10	29	06/08/09
5	12/07/04C	30	12/07/04
6	04/26/10	31	12/07/04
7	04/26/10	32	12/18/06
8	12/18/06	33	12/07/04
9	12/18/06	34	12/07/04
10	12/07/04	35	06/08/09
11	06/08/09	36	12/18/06
12	12/07/04	37	03/09/09
13	12/07/04	38	03/09/09
14	06/08/09	39	06/08/09
15	12/18/06	40	06/08/09
16	12/03/07	41	12/07/04
17	04/30/07	42	12/07/04
18	12/07/04	43	12/07/04
19	06/08/09	44	12/07/04
20	12/07/04	45	12/07/04
21	12/18/06	46	12/07/04
22	12/07/04	47	12/01/09
23	12/07/04	48	05/04/10
24	06/08/09	49	03/09/09
25	12/18/06	50	12/18/06

TABLE OF CONTENTS

	Section	Page
1.0	PURPOSE	4
2.0	REFERENCES/RECORDS REQUIRED/ COMMITMENT DOCUMENTS	4
3.0	PREREQUISITES	6
4.0	PRECAUTIONS/LIMITATIONS	7
5.0	SPECIAL TOOLS/EQUIPMENT	8
6.0	ACCEPTANCE CRITERIA	8
7.0	PROCEDURE	
	7.1 CCW Pump 3A Test	9
	7.2 CCW Pump 3B Test	21
	7.3 CCW Pump 3C Test	32
	ENCLOSURE/ATTACHMENTS	
	Enclosure 1	
	Component Cooling Water Pump Vibration Monitoring Locations	43
	Attachment 1	
	Pump Reference Value Evaluation Sheet	47
	Attachment 2	
	Temporary Modification for Performing CCW Pump 3B Test	50

1.0 PURPOSE

1.1 This procedure provides instructional guidance for the inservice testing or post maintenance pump test of the Component Cooling Water Systems to meet the surveillance requirements of References 2.1.1 and 2.1.2.

1.2 This procedure performs the required Group A tests of the Component Cooling Water pumps in accordance with the ASME OM Code, Subsection ISTB.

1.3 This procedure performs the required valve exercise tests in accordance with the ASME OM Code, Subsection ISTC.

2.0 REFERENCES/RECORDS REQUIRED/COMMITMENT DOCUMENTS

2.1 References

2.1.1 Technical Specifications

1. Section 4.0.5
2. Section 3.7.2

2.1.2 FSAR

1. Section 6, Engineered Safety Features
2. Section 9, Auxiliary and Emergency Systems

2.1.3 Operating Diagrams

1. 5613-M-3030, Sht 1, 2, 3, 4, and 5, Unit 3 Component Cooling Water System

2.1.4 Operating Procedures

1. 0-ADM-215, Plant Surveillance Tracking Program
2. 0-ADM-737, Post Maintenance Testing
3. 3-NOP-030, Component Cooling Water System
4. 3-OP-050, Residual Heat Removal System
5. 0-OSP-200.1, Schedule of Plant Checks and Surveillances

2.1.5 Miscellaneous Documents (i.e., PC/Ms, Correspondence)

1. Condition Report 95-935
2. JPN-PTN-SENP-95-026, Rev 2, Safety Evaluation for CCW Flow Balance and Post-Accident Alignment Requirements to Support Current and Uprated Conditions
3. Fourth Ten-Year Inservice Inspection Interval Inservice Testing Program for Pumps and Valves

2.1.5 (Cont'd)

4. CR 02-0121, PM 02-03-002, Incorporate Acceptance Criteria into all procedures used to Test Pumps in the IST Program.

2.1.6 Regulatory Guidelines

1. ASME OM Code 1998 Edition through 2000 Addenda, Subsection ISTB, Inservice Testing of Pumps in Light-Water Reactor Nuclear Power Plants

2. ASME OM Code 1998 Edition through 2000 Addenda, Subsection ISTC, Inservice Testing of Valves in Light-Water Reactor Nuclear Power Plants

2.2 Records Required

2.2.1 The date, time and section completed shall be entered in the Unit Narrative Log. Also, problems encountered while performing the procedure should be entered; i.e., malfunctioning equipment, delays due to changes in plant conditions, etc.

2.2.2 Prior to routing to QA Records, completed Subsections 7.1, 7.2 and 7.3 and Attachment 1 shall be routed to the IST Coordinator for analysis and evaluation.

2.2.3 Completed copies of the below listed items document compliance with Technical Specification surveillance requirements and shall be transmitted to QA Records for retention in accordance with Quality Assurance Records Program requirements:

1. Subsection 7.1

2. Subsection 7.2

3. Subsection 7.3

4. Attachment 1

5. Attachment 2

2.3 Commitment Documents

2.3.1 FPL letter from T. F. Plunkett to NRC L-90-389 dated November 13, 1990 LER 250-90-021, CCW System Split Header Configuration.

2.3.2 JPN-PTN-SENP-95-026, Safety Evaluation for CCW Flow Balance and Post Accident Alignment Requirements to Support Current and Uprated Conditions (LER 250/95-006)

2.3.3 FPL letter from T.O. Jones to NRC L-2003-226 dated September 17, 2003, LER 2003-009-00, Component Cooling Water System Configuration Outside Technical Specifications

3.0 PREREQUISITES

3.1 The Component Cooling Water System is aligned for normal operation per 3-NOP-030, Component Cooling Water System.

3.2 No major activities are in progress or planned that would affect the ability to perform this test.

3.3 All instruments and control devices are in service for the CCW System operation with no surveillances required and no outstanding PWOs, clearances, or Temporary System Alterations that affect system operability as per the following:

3.3.1 0-ADM-215 Plant Surveillance Tracking Program and 0-OSP-200.1, Schedule of Plant Checks and Surveillances. (No surveillances have exceeded the date required on the surveillance use of grace sheet.)

3.3.2 Temporary System Alterations (TSA) Log

3.3.3 Clearance Log

3.3.4 Out-of-Service Log

3.4 The test equipment required to perform this test is available.

3.5 Notifications have been made to ensure this test has been included in planning per 0-ADM-215, Plant Surveillance Tracking Program.

3.6 The 3A, 3B, and 3C Component Cooling Water Heat Exchangers are in service. [Commitment - Step 2.3.2]

3.7 Component Cooling Water Pumps 3A, 3B, and 3C are operable (except where test is performed following pump maintenance).

3.8 All Unit 3 Emergency Containment Coolers are operable.

3.9 Both Emergency Diesel Generators are operable.

3.10 Unit 3 is in Mode 1, 2, or 3 prior to commencing this test.

4.0 PRECAUTIONS/LIMITATIONS

4.1 The Shift Manager shall be notified immediately if any acceptance criteria are not met or any malfunction or abnormal conditions occur. This information shall also be recorded in the Remarks Section of the applicable attachment.

4.2 A dedicated operator shall be assigned to assist with this test to restore the system to normal at the direction of the test coordinator or the Shift Manager in the case of an emergency, abnormal temperatures associated with the CCW System, or any other reason to abort the test.

4.3 The CCW System shall be operable with two CCW pumps aligned to independent 4160 Volt power supplies, a third CCW pump aligned to either of those 4160 Volt power supplies and 3 CCW Heat Exchangers in Modes 1 through 4. When CCW Pump 3B is not operable and Subsection 7.2 is being performed to demonstrate operability of CCW Pump 3B, the 3D 4160V Bus shall be aligned to 3B 4160V Bus.

4.4 With the CCW System headers split in Modes 1 through 4, either the 3B or 3C CCW pump must remain operable to ensure Technical Specification 3.7.2, Limiting Condition for Operation, is met. This requirement is based on two CCW Heat Exchangers along with the 3B and 3C CCW pumps being aligned to the B CCW header. [Commitment – Step 2.3.3]

4.5 CCW flowrate through any one CCW heat exchanger shall not exceed 6840 gpm, as indicated by FI-3-613A and FI-3-613B. (Refer to JPN-PTN-SENP-95-026.)

4.6 CCW pump operation at less than 3235 gpm per pump should be minimized.

4.7 During operation of two pumps with the headers cross-tied, ECC single unit operation should be avoided to prevent unacceptable high flow through the ECC.

4.8 System alignments should be performed as specified to prevent unintentional or accidental isolation of components.

4.9 Pump operation shall be maintained within the limits as specified in the body of the procedure.

4.10 After a pump has been replaced, a new set or sets of reference values shall be determined from the results of the first inservice test. When a reference value or set of values may have been affected by repair or routine servicing of the pump, a new reference value or set of reference values shall be determined or the previous value reconfirmed by an inservice test run prior to returning the pump to normal service.

4.11 When performing valve manipulations for splitting the CCW Headers, the applicable Technical Specification action statement for one inoperable emergency containment cooler and one RHR Heat Exchanger should be entered. Refer to Technical Specifications for appropriate LCO requirements. [Commitment - Step 2.3.1]

4.12 Swapping of the CCW pumps should be performed in accordance with 3-NOP-030, Component Cooling Water System.

4.13 RCP Thermal Barrier Cooling Water Low Flow (A-1/3) and RCP Motor Bearing Cooling Water Low Flow (H-9/5) may be received when either MOV-3-749A or MOV-3-749B is open or during the operation of an ECC outlet valve with only one CCW pump running on the aligned header. No operability concern exists.

4.14 3A CCW pump should be tested first if 3B and 3C CCW pumps are operable. This will avoid unnecessary valve manipulations if another CCW pump is to be tested.

4.15 In the event of a valid SI signal, MOV-3-749A and MOV-3-749B shall be returned to the CLOSED position, CCW headers cross-tied as soon as practical, and the control switch for the 3A ECC placed in the required position.

5.0 SPECIAL TOOLS/EQUIPMENT

5.1 Calibrated Vibration Instrument and Probe

6.0 ACCEPTANCE CRITERIA

6.1 The required actions as a function of the measured pump test parameter are as follows for all tests except a reference value test which will establish new ranges.

Test Parameter	Required Actions
In the Acceptable Range	• Test is SAT.
In the Alert Range	• Generate CR. • Double the testing frequency.
In the Required Action Range	• Declare the pump inoperable. • Generate WR to correct deficiency. • Generate CR to determine maintenance rule implications.

6.2 The IST Coordinator or designee shall provide appropriate pump acceptance criteria.

6.3 When new reference values are being determined, the test data shall be evaluated and deviations between the previous and new set of reference values identified and verification that the new values represent acceptable pump operation shall be documented. (See Attachment 1.)

7.0 PROCEDURE

CAUTION

If CCW Pump 3A is to be tested following a satisfactory test of CCW Pump 3B or 3C, ensure the CCW System is cross-tied to preclude an auto start signal of the idle CCW pump.

7.1 CCW Pump 3A Test

INITIALS
CK'D VERIF

Date/Time Started: 10/24/10 / 16:30

7.1.1 Pump test acceptance criteria based on reference test performed on 3-15-01.

7.1.2 Obtain permission from the Shift Manager to perform this test.

7.1.3 Inform the RO of the intent to test the CCW Pump 3A.

7.1.4 Indicate below the reason for performing this test

- ✓ Quarterly Group A Pump IST Test
- ____ Increased Surveillance
- ____ Reference Value Test
- ____ Biannual Comprehensive Test
- ____ Other (Specify)____
- ____ Post Maintenance Test (WO #) ____
- ____ Maintenance Performed: ____

7.1.5 Record the test equipment numbers and calibration due dates below:

Instrument	Test Equipment No.	Cal Due Date
CCW Pump 3A Suct. Press	IST-3-40	10-31-10
CCW Pump 3A Disch. Press	IST-3-45	01-17-11
A CCW Header Flow	FI-3-613A	10-31-10
B CCW Header Flow	FI-3-613B	10-31-10
Vibration Instrument	T957 A	12-5-10
Vibration Probe	T 957 5A	12-5-10

7.1.6 Verify the calibrations of all Test Instruments are current.

INITIALS
CK'D VERIF

7.1.7 Open or verify open the following valves:

1. CCW Pump A Inlet, 3-701A
2. CCW Pump A Discharge, 3-703A
3. CCW Pump B Inlet, 3-701B
4. CCW Pump B Discharge, 3-703B
5. CCW Pump C Inlet, 3-701C
6. CCW Pump C Discharge, 3-703C
7. CCW Hx A Inlet, 3-712A
8. CCW Hx A Outlet, 3-713A
9. CCW Hx B Inlet, 3-712B
10. CCW Hx B Outlet, 3-713B
11. CCW Hx C Inlet, 3-712C
12. CCW Hx C Outlet, 3-713C
13. CCW Pump Suction Hdr Sectionalizing, 3-787B
14. CCW Pump Discharge Hdr Sectionalizing, 3-787D
15. CCW Hx Outlet Hdr Sectionalizing, 3-787G
16. CCW Hx Outlet Hdr Sectionalizing, 3-787H
17. CCW Hx Outlet Hdr Sectionalizing, 3-787E
18. CCW Pump Discharge Sectionalizing, 3-787C

INITIALS
CK'D VERIF

7.1.8 Verify three heat exchangers are in service.

NOTES

Verification that CCW Pump 3A total flow is greater than or equal to 8000 gpm satisfies the full-stroke exercise requirement for the CCW Pump 3A Discharge Check Valve, 3-702A.

To prevent exceeding the maximum flowrates on the CCW Heat Exchangers, the number of operating CCW pumps should be one less than the number of operable CCW Heat Exchangers.

7.1.9 Perform the full-stroke exercise of CCW Pump 3A Discharge Check Valve, 3-702A, as follows:

1. Verify that the 3A, 3B, and 3C Emergency Containment Coolers are not running.
2. Verify closed CCW to RHR HX 3A Isol Vlv, MOV-3-749A.
3. Verify closed CCW to RHR HX 3B Isol Vlv, MOV-3-749B.
4. Start or verify CCW Pump 3A running in accordance with 3-NOP-030, Component Cooling Water System.
5. Stop or verify not running CCW Pump 3B.
6. Stop or verify not running CCW Pump 3C.
7. Obtain CCW Pump 3A total flow as follows:

FI-3-613A/ERDADS	6500	gpm
FI-3-613B/ERDADS		gpm
CCW Pump 3A Total Flow =	6500	gpm

8. Verify total flow is greater than or equal to 8000 gpm. (N/A if 8000 gpm cannot be obtained.)

INITIALS
CK'D VERIF

7.1.9 (Cont'd)

9. **IF** 8000 gpm cannot be obtained, **THEN** perform the following:

a. Manually throttle open CCW to RHR HX 3B Isol Vlv, MOV-3-749B to obtain a total CCW Header flow of 8000 gpm.

b. Record CCW Pump 3A total flow as follows:

FI-3-613A/ERDADS 8050 gpm
FI-3-613B/ERDADS _____ gpm

CCW Pump 3A Total Flow = 8050 gpm

c. Verify total flow is greater than or equal to 8000 gpm.

d. Close CCW to RHR HX 3B Isol Vlv, MOV-3-749B, using the control switch.

7.1.10 Open or verify open the following valves:

1. CCW Pump A Suction Pressure Root Vlv to PI-3-1095A and IST-3-40, 3-701D
2. IST-3-40 Isol, 3-701R
3. IST-3-45 Isol, 3-704F

7.1.11 Vent CCW Pump 3A suction (IST-3-40) pressure gauges as follows:

1. Verify IST-3-40 Vent Valve, 3-1012, closed.
2. Uncap IST-3-40 Vent Valve, 3-1012.
3. Vent IST-3-40 by opening IST-3-40 Vent Valve, 3-1012, until a steady stream of water is emitted.
4. Close IST-3-40 Vent Valve, 3-1012.
5. Replace cap on IST-3-40 Vent Valve, 3-1012.
6. Record suction pressure (IST-3-40) 49.5 psig.

INITIALS
CK'D VERIF

CAUTION

Total Flow on CCW Header A shall not exceed 6500 gpm during this test.

7.1.12 Perform the following to verify or align the Charging Pumps, Spent Fuel Pit Hx, Non-Regen Hx, and Seal Water Hx to the **A** CCW Header:

1. Open or verify open CCW Hdr **A** Supply to Charging Pumps, Spent Fuel Pit Hx, Non-Regen Hx, and Seal Water Hx, 3-835F.
2. Open or verify open CCW Hdr **A** Return from Charging Pumps, Spent Fuel Pit Hx, Non-Regen Hx, and Seal Water Hx, 3-835G.
3. Close or verify closed CCW Hdr **B** Return from Charging Pumps, Spent Fuel Pit Hx, Non-Regen Hx, and Seal Water Hx, 3-835H
4. Close or verify closed CCW Hdr **B** Supply to Charging Pumps, Spent Fuel Pit Hx, Non-Regen Hx, and Seal Water Hx, 3-835E.

CAUTION

MOV-3-749A shall be closed prior to splitting CCW Headers.

7.1.13 Verify RHR is **NOT** required for cooldown, **THEN** perform the following steps:

1. Verify RCS temperature is greater than 350°F.
2. Verify closed MOV-3-749A.
3. Verify closed MOV-3-749B.

INITIALS
CK'D VERIF

NOTE

To prevent exceeding the maximum flowrates on the CCW Heat Exchangers, the number of operating CCW pumps should be one less than the number of operable CCW Heat Exchangers.

7.1.14 Align the CCW Pump 3A to the **A** Header and CCW Pumps 3B and 3C to the **B** CCW header as follows:

1. Open or verify open CCW Pump Suction Hdr Sectionalizing, 3-787B.
2. Open or verify open CCW Pump Discharge Hdr Sectionalizing, 3-787D.
3. Open or verify open CCW Hx Outlet Hdr Sectionalizing, 3-787G.
4. Open or verify open CCW Hx Outlet Hdr Sectionalizing, 3-787H.
5. Start or verify CCW Pump 3A running in accordance with 3-NOP-030, Component Cooling Water System.
6. Start or verify CCW Pump 3B or 3C running in accordance with 3-NOP-030, Component Cooling Water System.
7. Stop or verify the other CCW Pump (3B or 3C) aligned to the **B** header is not running.
8. Notify the Shift Manager that the following Substeps 7.1.14.9 and 7.1.14.10 will place the Unit in a Technical Specification action statement for the **3A** ECC and **3A** RHR Hx being inoperable **AND** should be logged in the EOOS Logbook. (N/A if notified during performance of Subsection 7.2 or 7.3.)
9. Close or verify closed CCW Hx Outlet Hdr Sectionalizing, 3-787E.
10. Close or verify closed CCW Pump Discharge Sectionalizing, 3-787C.

INITIALS
CK'D VERIF

7.1.14 (Cont'd)

NOTE

The Shift Manager shall be notified for appropriate action if A CCW Header flowrate is greater than 6500 gpm.

11. Start the 3A ECC.

12. Verify A CCW Header flowrate, as indicated on a CCW Hdr flow indicator, FI-3-613A, is less than 6500 gpm.

7.1.15 Manually throttle open 3A RHR Hx Comp Cooling Outlet, MOV-749A, to obtain 6500 gpm flowrate indicated on A CCW Hdr Flow, FI-3-613A.

7.1.16 Record the time 6500 gpm flowrate was established. 16:45 AM/PM

7.1.17 Verify 5 minutes have elapsed since 6500 gpm flowrate was established.

7.1.18 Verify open CCW Pump A Discharge Pressure Root Valve to PI-3-640A and IST-3-45, 3-704A, just prior to recording CCW Pump 3A operating data (Step 7.1.19) to ensure adequate communications with the respective flow stream.

7.1.19 Record the following CCW Pump 3A operating data:

1. A CCW Header Flowrate, FI-3-613A	6500 gpm
2. Pump Suction Pressure, IST-3-40	49.5 psig
3. Pump Discharge Pressure, IST-3-45	127.5 psig
4. Pump Inboard Seal Leakage	15 drops/min
5. Pump Outboard Seal Leakage	14 drops/min
6. Pump Motor Amps (Control Room Panel)	48 amps

INITIALS
CK'D VERIF

NOTE

Mounting pads are installed at all points and should be used with a magnet mounted accelerometer.

7.1.20 Record the following bearing casing vibration data below at the designated points as shown in Enclosure 1:

1. Pump Outboard Horizontal Vibration — .76652 in/sec
   - ☐ Acceptable Range: Less than or equal to 0.30 in/sec
   - ☐ Alert Range: Greater than 0.30 to 0.70 in/sec
   - ☑ Required Action Range: Greater than 0.70 in/sec
2. Pump Outboard Vertical Vibration — .06988 in/sec
   - ☐ Acceptable Range: Less than or equal to 0.25 in/sec
   - ☐ Alert Range: Greater than 0.25 to 0.60 in/sec
   - ☑ Required Action Range: Greater than 0.60 in/sec
3. Pump Outboard (Axial) Vibration — .06675 in/sec
   - ☑ Acceptable Range: Less than or equal to 0.22 in/sec
   - ☐ Alert Range: Greater than 0.22 to 0.54 in/sec
   - ☐ Required Action Range: Greater than 0.54 in/sec
4. Pump Inboard Horizontal Vibration — 0.1025 in/sec
   - ☑ Acceptable Range: Less than or equal to 0.27 in/sec
   - ☐ Alert Range: Greater than 0.27 to 0.66 in/sec
   - ☐ Required Action Range: Greater than 0.66 in/sec
5. Pump Inboard Vertical Vibration — 0.3897 in/sec
   - ☐ Acceptable Range: Less than or equal to 0.30 in/sec
   - ☑ Alert Range: Greater than 0.30 to 0.70 in/sec
   - ☐ Required Action Range: Greater than 0.70 in/sec
6. Motor Inboard Horizontal — 0.1065 in/sec
7. Motor Inboard Vertical — .04832 in/sec
8. Motor Outboard Horizontal — 0.00944 in/sec
9. Motor Outboard Vertical — 0.03119 in/sec
10. Motor Outboard Axial — 0.03125 in/sec

INITIALS
CK'D VERIF

7.1.21 Calculate pump differential pressure (dP) as follows:

Pump Discharge Pressure IST-3-45	-	Pump Suction Pressure IST-3-40	=	Pump Differential Pressure
127.5 psig	-	49.5 psig	=	78 psid

7.1.22 Compare the Pump Total Head to the Acceptance Criteria. (N/A if reference value test.)

a. **IF** this is a Group A test and NOT a reference value test, **THEN** check the range which applies for the Total Pump Head:

- ☐ Acceptable Range: 78.93 psid to 96.47 psid
- ☑ Required Action Range: Less than 78.93 psid or greater than 96.47 psid

b. **IF** this is a Comprehensive test and NOT a reference value test, **THEN** check the range which applies for the Total Pump Head:

- ☐ Acceptable Range: 81.57 psid to 90.33 psid
- ☐ Alert Level Range: 78.93 psid to less than 81.57 psid
- ☐ Required Action Range: Less than 78.93 psid or greater than 90.33 psid

7.1.23 **IF** this is a reference value test, **THEN** complete Attachment 1 **AND** have the test data/results evaluated by the IST Coordinator or designee to ensure they are reasonable and represent acceptable pump operation prior to declaring pump operable.

7.1.24 Close or verify closed, the following valves to isolate the IST gauges:

1. IST-3-40 Isol, 3-701R
2. IST-3-45 Isol, 3-704F

7.1.25 Open or verify open, the following valves to ensure the Pump Instrumentation gauges are in service:

1. PI-3-1095A Isol, 3-701P
2. PI-3-1095A and IST-3-40 Isol, 3-701D
3. PI-3-640A Isol, 3-704E

INITIALS
CK'D VERIF

7.1.26 Restore CCW A Header as follows:

1. Close 3A RHR Hx Comp Cooling Outlet, MOV-749A, with the Control Switch.
2. Stop the 3A ECC by placing the control switch STOP.
3. Place the control switch for 3A ECC in AUTO.
4. Verify 3A RHR Hx Comp Cooling Outlet MOV-749A, closed.

7.1.27 Return RHR System to required configuration using 3-OP-050, RESIDUAL HEAT REMOVAL SYSTEM, **OR** as required by the remainder of this procedure.

NOTE

To avoid unnecessary valve manipulations if another CCW pump is to be tested at this time, the following restoration steps (Steps 7.1.28, 7.1.29 and 7.1.30) should be omitted and marked N/A.

7.1.28 Restore the CCW System to normal configuration as follows:

1. Open or verify open, CCW Hx Outlet Hdr Sectionalizing, 3-787E.
2. Open or verify open, CCW Hx Outlet Hdr Sectionalizing, 3-787G.
3. Open or verify open, CCW Pump Discharge Sectionalizing, 3-787C.
4. Open or verify open, CCW Pump Discharge Sectionalizing, 3-787D.

INITIALS
CK'D VERIF

7.1.29 Perform the closure test of CCW Pump **3A** Discharge Check Valve, 3-702A as follows:

1. Verify open CCW Pump Discharge Sectionalizing Valve, 3-787C.
2. Verify open CCW Pump Discharge Sectionalizing Valve, 3-787D.
3. Verify running or start CCW Pump 3B or 3C in accordance with 3-NOP-030, Component Cooling Water System.
4. Stop or verify CCW Pump 3A, OFF.

NOTE

Verification that CCW Pump 3A is not rotating satisfies the exercise closure test of CCW Pump 3A Discharge Check Valve, 3-702A.

5. Observe no rotation of the CCW Pump 3A shaft to verify closure of CCW Pump **3A** Discharge Check Valve, 3-702A.

7.1.30 Re-align the non-essential loads to the **B** CCW header as follows: (Mark N/A if not applicable)

1. Open CCW Hdr B Supply to Charging Pumps, Spent Fuel Pit Hx, Non-Regen Hx, and Seal Water Hx, 3-835E.
2. Open CCW Hdr B Return from Charging Pumps, Spent Fuel Pit Hx, Non-Regen Hx, and Seal Water Hx, 3-835H.
3. Close CCW Hdr A Return from Charging Pumps, Spent Fuel Pit Hx, Non-Regen Hx, and Seal Water Hx, 3-835G.
4. Close CCW Hdr A Supply to Charging Pumps, Spent Fuel Pit Hx, Non-Regen Hx, and Seal Water Hx, 3-835F.

7.1.31 Obtain names and initials of all personnel involved in test performance thus far in the PERFORMED BY blanks of this subsection.

INITIALS
CK'D VERIF

NOTE

If another pump test is required, the applicable subsection should be started at this time to prevent prolonged system operation with the test configuration.

7.1.32 Complete the following:

Testing of CCW Pump 3A and related valves is complete and tested components are

Satisfactory _____ Unsatisfactory ✓

7.1.33 Inform the RO that the testing of CCW Pump 3A and related valves (Subsection 7.1) is complete **AND** to log the test as specified in Subsection 2.2.

7.1.34 Notify the Shift Manager of completion of the CCW Pump 3A test and the results of the data analysis.

7.1.35 Verify Log entries specified in Subsection 2.2, have been recorded.

REMARKS: _____

Date/Time Completed: 10/24/10 20:00

PERFORMED BY (Print)	INITIALS
D. Dunkerd	D.D
A. Grace	A.G.
Harlow Cameron	H.C.

REVIEWED BY: _____ *Shift Manager* _____ *Date*

REVIEWED BY: _____ *IST Coordinator* _____ *Date*

Facility: Turkey Point | Task No: 02203001100

Task Title: Determine the Dose Rate, Dose Limit, and the number of people to perform the task | JPM No: S.A.3

K/A Reference: 2.3.4 (2.5/3.1)

Examinee: _____ | NRC Examiner: _____

Facility Evaluator: _____ | Date: _____

Method of testing: _____

Simulated Performance _____ | Actual Performance _____

Classroom X | Simulator _____ | Plant _____

Read to the examinee:
I will explain the initial conditions, which steps to simulate or discuss, and provide initiating cues. When you complete the task successfully, the objective for this job performance measure will be satisfied.

Initial Conditions:
- A large break LOCA has occurred and a Site Area Emergency was declared.
- Cold leg recirculation is in operation using the 3A RHR pump.
- RHR pump 3B showed evidence of gas binding and was stopped in E-1.
- The OSC in the EOF has determined that the 3B RHR pump should be vented to ensure a backup RHR pump is available.
- The General Radiation level in the area is 16 R/hr.
- The OSC estimates that the total time to vent the 3B RHR in the radiation area is 45 minutes.
- The Emergency Coordinator has authorized exposures in excess of 10CFR20 limits; however, he also specifies exposures shall be maintained ALARA.

- The site emergency workers listed in the table below are available.

Site Emergency Worker	Accumulated TEDE Dose this year
A	800 mr
B	1000 mr
C	1200 mr
D	1400 mr
E	1600 mr

Task Standard:

Examinee determines the minimum required number of people to vent the RHR pump and their maximum allowed stay time.

Required Materials:
- Calculator

General References:
- 0-ADM-600, Radiation Protection Manual
- Emergency exposure Limits in 0- EPIP- 1102,or 0-EPIP-20111

Initiating Cue:

Determine the minimum required workers to vent the 3B RHR Pump, including the maximum allowed stay time for each required worker.

Assume no dose in transit.

Time Critical Task: No

Validation Time: 20 minutes

HAND JPM BRIEFING SHEET TO EXAMINEE AT THIS TIME!

SIMULATOR SETUP

N/A

Denote critical steps with a check mark(✓)

Start Time _____

STEP 1 :	Determine the total estimated dose for the task	____ SAT ____ UNSAT
Standard:	16Rem/hr x 0.75 hrs= 12 Rem	
Cue		
Comment		
NOTE:		

STEP 2 : √	Determine the dose limit for site emergency workers;	____ SAT ____ UNSAT
Standard:	Determines the limit is 5 Rem from 0-EPIP-20111,Re-entry,Enclosure 1 or from 0-EPIP-1102, Duties of the Recovery Manager, Enclosure 2. Applicant determines venting the 3B RHR pump is equivalent to "performance of activities that would not directly mitigate the event, minimizes escalation, or minimizes effluent releases."	
Cue		
Comment		
NOTE:		

STEP 3 : √	Determines the minimum number of people required	____ SAT ____ UNSAT
Standard:	Applicant determines that a minimum of three people are required to vent the pump because: • 12 REM is required for the task • Each person is limited to 5 REM emergency exposure	
Cue		
Comment		
NOTE:	*0-EPIP-20111 step 5.1.1.3 – Exposures to emergency workers shall be maintained as low as reasonably achievable (ALARA) and if possible be maintained within site specific radiological exposure guidelines and/or limits identified in 10 CFR 20.*	

STEP 4 : √	Determines Stay time for each worker	____ SAT ____ UNSAT
Standard:	A: 4200mrem/16000mr/hr X 60 min/hr=15.75 minutes B: 4000/16000X60=15 minutes C: 3800/16000x60= 14.25 minutes	
Cue		
Comment		
NOTE:		

Terminating Cue:	**The task is complete when the Examinee returns the cue sheet to the examiner.**	**STOP**

Stop Time _____

Verification of Completion

Job Performance Measure No. S.A.3

Examinee's Name: _____

Examiner's Name: _____

Date Performed: _____

Facility Evaluator: _____

Number of Attempts: _____

Time to Complete: _____

Question Documentation:

Question:

_____

_____

_____

_____

_____

Response:

_____

_____

_____

_____

_____

Result: Satisfactory/Unsatisfactory

Examiner's signature and date: _____ _____

JPM BRIEFING SHEET

The examiner will explain the initial conditions, which steps to simulate or discuss, and provide initiating cues. When you complete the task successfully, the objective for this job performance measure will be satisfied.

Initial Conditions:

- A large break LOCA has occurred and a Site Area Emergency was declared.
- Cold leg recirculation is in operation using the 3A RHR pump.
- RHR pump 3B showed evidence of gas binding and was stopped in E-1.
- The OSC in the EOF has determined that the 3B RHR pump should be vented to ensure a backup RHR pump is available.
- The General Radiation level in the area is 16 R/hr.
- The OSC estimates that the total time to vent the 3B RHR in the radiation area is 45 minutes.
- The Emergency Coordinator has authorized exposures in excess of 10CFR20 limits; however, he also specifies exposures shall be maintained ALARA.

- The site emergency workers listed in the table below are available.

Site Emergency Worker	Accumulated TEDE Dose this year
A	800 mr
B	1000 mr
C	1200 mr
D	1400 mr
E	1600 mr

Initiating Cue:

Determine the minimum required workers to vent the 3B RHR Pump, including the maximum allowed stay time for each required worker.

Assume no dose in transit.

Acknowledge to the examiner when you are ready to begin.

HAND THIS PAPER BACK TO YOUR EVALUATOR WHEN YOU HAVE SATISFACTORILY COMPLETED THE ASSIGNED TASK.

Florida Power & Light Company

Turkey Point Nuclear Plant

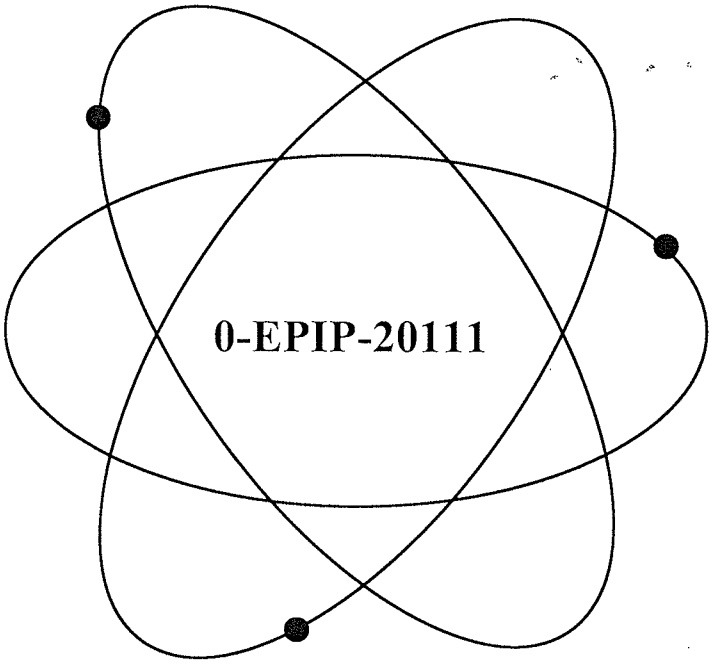

Title:

Re-Entry

(Reference Use)

Safety Related Procedure

Responsible Department:	Emergency Preparedness
Revision Approval Date:	7/30/09

PCRs *09-1429*
RTSs *97-0887P, 99-0568, 02-0089P, 04-0996P*

W97:JR/ev/ev/ln

LIST OF EFFECTIVE PAGES

Page	Revision Date
1	07/30/09
2	07/30/09
3	10/28/04
4	03/14/02
5	09/29/99
6	10/28/04
7	10/28/04
8	09/29/99
9	07/30/09
10	09/29/99
11	09/29/99
12	09/29/99
13	09/29/99
14	03/14/02
15	10/28/04
16	10/28/04
17	10/28/04
18	10/28/04
19	10/28/04
20	10/28/04
21	10/28/04
22	10/28/04

TABLE OF CONTENTS

	Section	Page
1.0	PURPOSE	4
2.0	REFERENCES/RECORDS REQUIRED/ COMMITMENT DOCUMENTS	4
3.0	RESPONSIBILITIES	6
4.0	DEFINITIONS	7
5.0	PROCEDURE	8
	ENCLOSURE/ATTACHMENTS	
	Enclosure 1	
	Emergency Worker Exposure Limits	15
	Enclosure 2	
	Guidelines For Issuing Emergency Dosimetry	18
	Attachment 1	
	Team Briefing/Debriefing Form	19
	Attachment 2	
	Emergency Exposure Authorization Form	21
	Attachment 3	
	Potassium Iodide (KI) Distribution Log	22

1.0 PURPOSE

1.1 This procedure provides guidelines for the formation of Emergency Response Teams during an emergency or recovery phase and provides instructions on emergency exposure controls during re-entry.

2.0 REFERENCES/RECORDS REQUIRED/COMMITMENT DOCUMENTS

2.1 References

2.1.1 Plant Procedures

1. 0-ADM-600, Radiation Protection Manual
2. 0-EPIP-20101, Duties of Emergency Coordinator
3. 0-EPIP-20129, Emergency Response Team, Radiological Monitoring
4. 0-EPIP-20132, Technical Support Center (TSC) Activation and Operation
5. 0-EPIP-20133, Operations Support Center (OSC) Activation and Operation
6. 3/4-EOP-FR-Z.1, Response to High Containment Pressure
7. 3/4-NCZP-051.1, Obtaining a Containment Air Sample During Emergency Conditions
8. 3/4-NCZP-094.1, Obtaining a Unit 3 (Unit 4) PASS Sample During Emergency Conditions
9. 3/4-OP-094, Containment Post Accident Monitoring Systems

2.1.2 Regulatory Guidelines

1. 10 CFR 20, Standards for Protection Against Radiation
2. 10 CFR 50.47, Emergency Plans

2.1.3 Miscellaneous Documents (PC/M, Correspondence, etc.)

1. Turkey Point Plant Radiological Emergency Plan
2. JNS-HP-93-037, Radiological Exposure Control - Emergency Worker Dose Limits
3. JPN-PTN-SENJ-90-073, Safety Evaluation Related to Operation of the Post Accident Containment Ventilation System at Turkey Point Units 3 and 4, Revision 1
4. JNO-HP-94-056, Revision to Policy Statement Concerning Emergency Exposure Limits

2.2 Records Required

2.2.1 Completed copies of the below listed item(s) constitute Quality Assurance Records and shall be transmitted to QA Records for retention in accordance with Quality Assurance Records Program requirements:

1. None

2.2.2 Upon deactivation of the OSC, the following completed documents shall be transmitted to the EP Coordinator who shall review and retain for archival purposes:

1. Copies of the emergency responders bound logs.
2. Copies of Emergency Response Team radiological survey records.
3. Other records developed to record emergency response activities.

2.2.3 Personnel exposure records and radiological survey records are retained by Health Physics in accordance with QA Records requirements.

2.3 Commitment Documents

2.3.1 None

3.0 RESPONSIBILITIES

3.1 The Emergency Coordinator is responsible for:

3.1.1 Authorizing emergency exposures to exceed 10 CFR 20 limits.

3.1.2 Authorizing all re-entry activities.

3.2 The TSC Health Physics Supervisor is responsible for:

3.2.1 Ensuring that exposure limits are followed by Emergency Response Team members.

3.2.2 Coordinating all Health Physics response activities.

3.2.3 Distribution of Potassium Iodide (KI) to TSC personnel and offsite monitoring teams.

3.3 The OSC Manager is responsible for coordinating the activities of all Emergency Response Teams.

3.4 OSC Health Physics Supervisor is responsible for the following:

3.4.1 Ensuring that Emergency Response Teams receive a radiological briefing.

3.4.2 Ensuring all Health Physics activities in the OSC are coordinated with the OSC Manager and other discipline supervisors.

3.4.3 Distribution of Potassium Iodide (KI) to OSC personnel as directed by the TSC HP Supervisor.

3.5 The OSC Mechanical Coordinator, OSC Electrical Coordinator, OSC I&C Coordinator, OSC Chemistry Supervisor, OSC Health Physics Supervisor, and OSC Operations Supervisor are responsible for:

3.5.1 Planning re-entry activities and assigning qualified personnel to the Emergency Response Teams as determined by the OSC Manager.

3.5.2 Ensuring Emergency Response Team members are briefed and debriefed for re–entry activities.

4.0 DEFINITIONS

4.1 Committed Dose Equivalent (CDE): The dose equivalent to organs or tissue that will be received from an intake of radioactive material by an individual during the 50 year period following the intake.

4.2 Deep Dose Equivalent (DDE): Applies to external whole body exposure, is the dose equivalent at a tissue depth of 1 cm.

4.3 Emergency Exposure: Radiation exposures during a declared emergency to individuals involved in mitigating or life saving actions which may exceed 10 CFR 20 limits.

4.4 Emergency Re-entry Actions: Actions taken within the Protected Area to mitigate an emergency.

4.5 Recovery Re-entry Actions: Actions taken within the Protected Area to return the plant to its pre-accident conditions.

4.6 Total Effective Dose Equivalent (TEDE): The sum of the deep dose equivalent and the committed effective dose equivalent for internal exposures. The terminology Total Dose is equivalent to TEDE.

4.7 Total Organ Dose Equivalent (TODE): The sum of the deep dose equivalent and the committed dose equivalent to an organ.

4.8 Potassium Iodide (KI): A radio-protective drug that blocks the uptake of radioiodine by saturating the thyroid with stable iodine.

5.0 PROCEDURE

5.1 General

5.1.1 The following guidelines for emergency exposure of personnel shall be followed during the re-entry operation:

1. Re-entry personnel that have been authorized to exceed regulatory exposure limits should be volunteers, familiar with the risks involved (radiosensitivity of fetuses, effects of acute exposures, etc.), and whose normal duties have trained them for such missions.

2. Declared pregnant adults should not be used as on-site emergency workers.

3. Exposures to emergency workers shall be maintained as low as reasonably achievable (ALARA) and if possible be maintained within site specific radiological exposure guidelines and/or limits identified in 10 CFR 20.

4. Conditions may warrant re-entry into high radiation areas leading to exposure in excess of the regulatory limit. Except for rescue of personnel from a life threatening situation, authorization must be given in advance by the Emergency Coordinator (EC) in consultation with the TSC HP Supervisor (or alternate). If the EOF is operational and as time permits, the EC should obtain concurrence from the Recovery Manager (RM). In any case where regulatory limits have been exceeded, the EC shall notify the RM of the event.

5. If obtaining EC approval for exposure in excess of the regulatory limit will result in leaving the accident scene or decrease the victim(s) chance of survival, life-saving actions may be performed without obtaining EC approval. The EC shall be notified immediately following the rescue operation.

6. Emergency exposures requiring immediate action are not planned and are not controlled as a Planned Special Exposure. Dose received from exposure under emergency conditions will be added to the dose received during the current year, prior to the emergency, to determine compliance with the occupational dose limits in 10 CFR 20.

5.1.1 (Cont'd)

7. Doses above regulatory limits will require reporting pursuant to 10 CFR 20.2202 and 10 CFR 20.2203. Any dose in excess of the annual limits specified in Section 10 CFR 20.1201(a) will be accounted for in accordance with 10 CFR 20.1206(e). If an individual exceeds any of these limits, then that individual will not be available for additional dose under 10 CFR 20.1201(a)

8. Emergency worker exposure limits are provided in Enclosure 1.

9. Potassium Iodide (KI) should be distributed to emergency workers when a projected or actual CDE of greater than or equal to 5 rem is expected.

10. Guidelines for issuing emergency dosimetry are provided in Enclosure 2.

11. Some Emergency Response Team activities, such as personnel rescue, may require that Emergency Response Teams be dispatched from the OSC quickly without the benefit of protective clothing and extensive briefings. Such activities shall be carefully evaluated and monitored to maximize personnel safety.

NOTE

Individual Operators may be sent into the plant for EOP or emergency actions as needed unless deemed unsafe to do so (i.e., adverse radiological or security conditions). Others may be exempted if specifically authorized by the Emergency Coordinator.

5.1.2 Upon OSC activation, an Emergency Response Team dispatched from the OSC shall consist of at least two persons.

5.1.3 The Emergency Coordinator has the authority to waive an individuals emergency response training requirements.

5.1.4 Re-entry actions shall be either emergency or recovery actions and be authorized by the Emergency Coordinator.

5.1.5 As deemed necessary, Emergency Response Teams may be dispatched to perform re-entry activities including accident damage assessment and mitigation, and/or PASS sample gathering.

5.1.6 Silver zeolite cartridges shall be disposed of as follows:

1. **IF** non-radioactive, **THEN** handle the cartridge as a characteristic hazardous waste.

2. **IF** radioactively contaminated, **THEN** handle the cartridge as a mixed waste.

5.2 Upon receiving a team request from the TSC, the OSC Manager should:

5.2.1 Assign an OSC discipline Supervisor/Coordinator responsibility for each organized Emergency Response Team based on the task to be completed.

5.2.2 Ensure the OSC discipline Supervisor/Coordinator responsible for the Emergency Response Team completes the appropriate sections of a form similar to Attachment 1.

1. The completion of team briefing forms shall not delay the dispatch of the Emergency Response Team.

2. Teams may be briefed and dispatched prior to the completion of the forms.

5.2.3 Ensure the OSC Health Physics Supervisor has completed the following tasks:

1. Completed the appropriate sections of a form similar to Attachment 1.

NOTES

- *Radiological briefings should be commensurate with current and potential radiological conditions in the plant.*
- *During the initial phases of an event, radiological information may not be available until after teams have been dispatched. In such cases, the teams should be updated as information is received.*

2. As radiological conditions warrant, the Emergency Response Team should be given a radiological briefing that includes the following:

   a. The maximum allowable dose that may be received by the Emergency Response Team members.

   b. The stay times for the Emergency Response Team.

   c. Possible travel routes for the Emergency Response Team in order to minimize radiological exposures and contamination.

3. Issued dosimetry capable of measuring the anticipated maximum exposure and type of exposure, as required.

4. Guidelines for issuing emergency dosimetry are provided in Enclosure 2.

5. Issued protective clothing and respiratory protection, as necessary.

5.2.3 (Cont'd)

6. Issued adequate survey instrumentation and equipment.

7. For those emergency exposures that may exceed 10 CFR 20 limits, the following shall apply:

   a. Personnel authorized to receive exposures in excess of 10 CFR 20 limits should be volunteers who are familiar with the risks involved and the tasks to be completed and who shall attest to their volunteer status by completing and signing their individual section of a form similar to Attachment 2.

   b. Except for rescue of personnel from a life threatening situation, EC authorization shall be obtained for emergency exposures that may exceed 10 CFR 20 limits and shall be documented on a form similar to Attachment 2.

   c. Declared pregnant adults should not be used as on-site emergency workers.

   d. The emergency exposure limits for personnel performing actions are provided in Enclosure 1.

   e. When the emergency condition is terminated, ensure the Nuclear Division Medical Review Officer is notified to perform a medical review of any emergency exposure.

5.2.4 Ensure the Emergency Response Team has received necessary radiological and task briefings.

1. The completion of team briefing forms shall not delay the dispatch of the Emergency Response Team.

2. Teams may be briefed and dispatched prior to the completion of the forms.

5.3 Upon dispatching the Emergency Response Team, the OSC Supervisor/ Coordinator responsible for the Emergency Response Team should:

5.3.1 Maintain communications with the Emergency Response Team.

5.3.2 Update the Emergency Response Team to changing conditions.

5.3.3 Periodically update the OSC Manager and OSC Status Boards to reflect current status and new information.

5.3.4 Periodically assess the need for additional manpower or equipment support.

5.3.5 Assess physical strain on the Emergency Response Team due to factors such as heat, time in respirator or SCBA, and type of work being done.

5.3.6 If SCBA was required, estimate the time left on the bottled air.

5.4 Emergency Response Team members shall perform the following:

5.4.1 Attend pre-job briefings prior to dispatch to the emergency scene.

5.4.2 Utilize protective equipment prescribed by the cognizant supervisors.

5.4.3 Follow instructions for maintaining Emergency Response Facility accountability.

5.4.4 Follow instructions of the Health Physics Emergency Response Team member regarding radiological conditions during travel and task performance.

5.4.5 Follow suggested travel paths to the work location, if possible, without endangering personnel.

5.4.6 Note environmental and radiological conditions for recording and reporting to cognizant supervisors.

5.4.7 Perform assigned tasks at the work scene quickly and efficiently with special attention to industrial and radiological safety measures.

5.4.8 Periodically update the discipline supervisor on the progress of the assigned task(s).

5.4.9 Report and record information on the assigned task to the appropriate OSC Supervisor/Coordinator and on a form similar to Attachment 1.

5.4.10 Report significant occurrences to cognizant supervisors/coordinators via hand held radios or other available Communication Systems.

5.4.11 Following completion of assigned tasks, report back to the OSC for personnel accountability, monitoring, debriefing, and completion of records.

5.5 Upon the return of the Emergency Response Team, the OSC Supervisor/Coordinator responsible for the Emergency Response Team should perform the following:

5.5.1 Debrief the Emergency Response Team by completing their form similar to Attachment 1.

5.5.2 Ensure that any significant changes or new observations are reported to the appropriate supervisors and the OSC Manager.

5.5.3 Ensure that new or revised information obtained by the Emergency Response Team is displayed and logged appropriately.

5.5.4 Inform the OSC Manager of the status of the Emergency Response Team and task results.

5.5.5 Ensure that status boards are updated to reflect Emergency Response Team status and task results.

5.5.6 Restrict further exposure and if necessary, ensure the provision of medical care to individuals receiving emergency exposures.

5.6 Operation of the Post Accident Sampling System

5.6.1 Following an accident, a grab sample from the Post Accident Sampling System (PASS) may be obtained to determine the condition of the plant. Samples should be obtained using the instructions in procedures 3/4-NCZP-094.1, OBTAINING A UNIT 3 (OR UNIT 4) PASS SAMPLE DURING EMERGENCY CONDITIONS, 3/4-NCZP-051.1, OBTAINING A CONTAINMENT AIR SAMPLE DURING EMERGENCY CONDITIONS and 3/4-OP-094, CONTAINMENT POST ACCIDENT MONITORING SYSTEMS, as necessary.

END OF TEXT

ENCLOSURE 1
(Page 1 of 3)

EMERGENCY WORKER EXPOSURE LIMITS

NOTE

Consult 0-EPIP-20129, Emergency Response Team, Radiological Monitoring for off-site monitoring exposure guidelines.

For the following missions, the exposure limits are (Note 1):	TOTAL DOSE(Note 2) (TEDE)	THYROID(Note 3) (CDE)
Performance of actions that would not directly mitigate the event, minimize escalation, or minimize effluent releases	5 REM	50 REM
Performance of actions that mitigate the escalation of the event, rescue persons from a non-life threatening situation, minimize exposures or minimize effluent releases.	10 REM	100 REM
Performance of actions that: decrease the severity of the event, or terminate the processes causing the event in an attempt to control effluent releases to avoid extensive exposure of large populations. Also rescue of persons from a life-threatening situation.	25 REM	250 REM
Rescue of persons from a life threatening situation. (Volunteers should be above the age of 45.) (Note 4)	(Note 5)	(Note 5)

NOTES

- *Both Total Dose (TEDE) and Thyroid Dose (CDE) should be used for purposes of controlling exposure.*
- *Protective clothing, including respirators, should be used where appropriate.*

(Note 1) Exposure limits to the lens of the eye are three times the Total Dose (TEDE) values listed.

(Note 2) Total Dose (TEDE) is the total dose from both external and internal (weighted) sources - Total Effective Dose Equivalent.

(Note 3) Thyroid dose (CDE) commitment from internal sources - Committed Dose Equivalent. The same dose limits also apply to other organs (CDE), skin (Shallow Dose Equivalent), and extremities (Extremity Dose Equivalent).

(Note 4) Volunteers with full awareness of risks involved, including numerical levels of dose at which acute effects of radiation will be incurred and numerical estimates of the risk of delayed effects.

ENCLOSURE 1
(Page 2 of 3)

EMERGENCY WORKER EXPOSURE LIMITS

(Note 5) No upper limit for Total Dose (TEDE) and/or Thyroid Dose (CDE) dose has been established because it is not possible to pre-judge the risks that one person should be allowed to take to save the life of another. Also, no specific limit is given for the thyroid, since in the extreme case, complete thyroid loss might be acceptable sacrifice for a life saved. This should not be necessary, if respirators and/or thyroid protection for rescue personnel are available as the result of adequate planning.

ENCLOSURE 1
(Page 3 of 3)

EMERGENCY WORKER EXPOSURE LIMITS

Guidance for the use of Potassium Iodide (KI) – A Thyroid Blocking Agent

1. The EOF HP Manager in consultation with the TSC HP Supervisor will determine the need to dispense Potassium Iodide (KI) based upon a projected or actual thyroid Committed Dose Equivalent (CDE) of greater than or equal to 5 rem. (The thyroid CDE of greater than or equal to 5 rem is based on the FDA recommended threshold for ingestion of KI by pregnant and lactating women).

2. The TSC HP Supervisor and the OSC HP Supervisor will coordinate KI distribution once a decision for use has been determined.

3. The TSC HP Supervisor is responsible for KI distribution to personnel in the Unit 3 and 4 Control Room and the TSC and Field Monitoring Teams and to Security personnel not assigned to the OSC.

4. The OSC HP Supervisor is responsible for distribution in the OSC.

5. KI should be administered and ingested within 2 hours after the determination is made that thyroid CDE is greater than or equal to 5 rem.

6. When KI is issued, thyroid intakes will be estimated by whole body counts.

7. Administering KI after an uptake may limit thyroid CDE depending on time after exposure.

8. Caution emergency response personnel of potential KI side effects if they are allergic to shellfish or iodide. Emergency response personnel who know they have such allergies should be replaced in lieu of directing them to ingest KI.

9. All KI tablets are stored in the HP kits in the Unit 3 and 4 Control Room, TSC, OSC and Field Monitoring Team Kits.

ENCLOSURE 2
(Page 1 of 1)

GUIDELINES FOR ISSUING EMERGENCY DOSIMETRY

- One exposure guideline shall be utilized for ALL Emergency Response Team members when issuing emergency dosimetry:

DEEP DOSE EQUIVALENT (DDE)	COMMITTED DOSE EQUIVALENT (CDE)
3 REM	**25 REM**

- Emergency responders that do not have an active TLD shall be issued dosimetry with the following exposure guideline:

TOTAL EFFECTIVE DOSE EQUIVALENT
(TEDE)

100 MREM

- Emergency responders that bring their TLD with them to the emergency facilities **DO NOT** need to be issued an additional emergency TLD, however, depending on their particular emergency response function they may require additional emergency dosimetry.

- Emergency responders required to stay in the field during and after the activation of the emergency facilities may not have a form of dosimetry. **ALL** field teams shall be required to have some form of emergency dosimetry. Arrangements shall be made to supply those field teams with dosimetry. The only exception to this requirement would be plant conditions that prohibit the transport of dosimetry to those teams because it would pose a greater risk to the personnel involved.

ATTACHMENT 1
(Page 1 of 2)
TEAM BRIEFING/DEBRIEFING FORM

I. Team Number:_____ **Date:**_____

Team Members:

_____ _____

_____ _____

_____ _____

Task Description:_____

_____

Location /Travel Route

_____

_____

_____

OSC Mgr	X-6480
OSC Chem Supv	X-6978
OSC HP Supv	X-6575
OSC HPSS	X-6988
OSC HP Comm.	X-6103
OSC Ops Supv	X-7168
OSC Mech Coor'd	X-6680
OSC Elect Coor'd	X-6681
OSC I&C Coor'd	X-6682
OSC Security	X-6779
OSC Recorder	X-6657
OSC Re-entry Coor'd	X-6794
OSC Supv	X-6659

II. ANTICIPATED RADIOLOGICAL CONDITIONS:

NOTE: Initially, this information may not be available. The completion of this form should not delay the dispatch of the team. If non-applicable, continue with section III.

Exposure Levels: Average General Area:_____ mrem/hr
Hot Spots: Yes ☐ No ☐ Intensity: _____mrem/hr
Maximum Allowable Dose:_____mrem
Stay Time:_____ Extremity or Multibadging (Circle One)

Surface Contamination: Surface (dpm/100 cm^2): _____ β / γ _____ α
Is contamination wet? Yes ☐ No ☐ Plastics? Yes ☐ No ☐

Airborne Activity: _____ DAC _____ μCi/ml
Respiratory Protection? Yes ☐ No ☐
If Yes, type: PC FA BH SCBA (Circle)
If No, Faceshield?: Yes ☐ No ☐

Meteorological Conditions: Wind Direction (from - to): _____Wind Speed: _____
On-site or Off-site Areas Evacuated or Sheltered: _____

III. TEAM BRIEFING INFORMATION:

System / Component:_____ Isolation Required: Yes ☐ No ☐
Safety: _____
Equipment/Instrumentation: _____
Communications Method/Backup/Frequency: _____
Special Instructions (keys required, SCBA stay times, etc.): _____

_____

_____

_____

IV. SIGNATURES / APPROVAL:

Assignment Briefing By:_____ Time:_____
Responsible OSC Supervisor/Coordinator

Radiological Briefing By:_____ Time:_____
Health Physics

Team Dispatch Approved:_____ Time Team Out:_____
OSC Manager

NOTE: A COPY OF THIS FORM SHOULD ACCOMPANY THE TEAM.

ATTACHMENT 1
(Page 2 of 2)
TEAM BRIEFING/DEBRIEFING FORM

Team Number:_____ **Date:**_____

V. Task Report:

(Record chronology of actions taken, measurement and test data, system responses, observations, etc.)

_____

_____

_____

_____

_____

_____

_____

_____

_____

_____

_____

_____

_____

_____

_____

_____

Task Report Completed By:_____ Time:_____

VI. Team Debriefing Information:

Time Team In:

Task Completed:..... Yes ☐ .. No ☐

Additional Entry Required: ..... Yes ☐ .. No ☐

Shielding/Isolation Removed: ..... Yes ☐ .. No ☐ .. N/A ☐

Keys Returned: ..... Yes ☐ .. No ☐ .. N/A ☐

Problems encountered/safety hazards:_____

_____

_____

_____

Debriefing Completed By:_____ Time:_____

Responsible OSC Supervisor/Coordinator

ATTACHMENT 2
(Page 1 of 1)

EMERGENCY EXPOSURE AUTHORIZATION FORM

Date:_____

I have been briefed on the radiological consequences and hazards associated with the authorized emergency exposure, and I have volunteered to perform the task described below:

Name of Individual(s)	Social Security Number	TLD Number	Signature	Time

Brief Description of Task:_____

Authorization Limit:_____

Briefing Completed By:_____ Time:_____
(Signature)

OSC Health Physics
Supervisor:_____ Time:_____
(Signature)

OR

TSC Health Physics
Supervisor:_____ Time:_____
(Signature)

Emergency Exposure Authorized by:

Emergency Coordinator:_____ Time:_____
(Signature)

NOTE: Signatures required by TSC personnel may be authorized by phone or fax.

ATTACHMENT 3
(Page 1 of 1)

POTASSIUM IODIDE (KI) DISTRIBUTION LOG

This form is to be used in the TSC and OSC to record the names of individuals that received Potassium Iodide (KI) tablets.

Date:______________________________

Name	Signature

FINAL PAGE

Facility: Turkey Point Task No: 01200002500

Task Title: Perform a Critical Safety Function Assessment JPM No: R.A.4

K/A Reference: 2.4.21

Examinee: _____ NRC Examiner: _____

Facility Evaluator: _____ Date: _____

Method of testing: _____

Simulated Performance _____ Actual Performance _____

Classroom _____ Simulator _____ Plant _____

Read to the examinee:

I will explain the initial conditions, which steps to simulate or discuss, and provide initiating cues. When you complete the task successfully, the objective for this job performance measure will be satisfied.

Initial Conditions:

- Unit 3 is in MODE 3 following an event, 3-EOP-E-1, Loss of Reactor or Secondary Coolant is in progress.
- The following indications are present

TE-3-6700 = 272 °	TE-3-6701 = 272 °	TE-3-6702 = 272 °
N-3-41/43= 0%	N-3-42/44= 0%	
N-3-35= 1x 10E -11	N-3-36= 1x 10E -11	
N-3-35 SUR= -0.0 DPM	N-3-36 SUR= -0.0 DPM	
N-3-31= 4000 cps and decreasing	N-3-32= 4000 cps and decreasing	
Gamma-Metrics NI-3-6649A= 1000cps and 10E-5 % PWR and decreasing	Gamma-Metrics NI-3-6649B= 1000cps and 10E-5 % PWR and decreasing	
5 Hottest CETs are approx 261 °	CET Subcooling is 0°	Auxiliary Feedwater Flow = 400 gpm
A S/G NR = 15%	B S/G NR = 17%	C S/G NR = 18%
A S/G Press = 650 psig	B S/G Press = 650 psig	C S/G Press = 650 psig
Current RCS Cold Leg A Temperature = 305°F	Current RCS Cold Leg B Temperature = 480°F	Current RCS Cold Leg C Temperature = 480°F
Containment Pressure = 22.7 psig	Containment Recirculation Sump = 324 inches	Cold Leg Decrease in the last 60 min = 242 °
Pressurizer Level = 0%	RVLMS =0% in the outlet plenum	Lowest RCS Cold leg Temperature was 305°F

Task Standard:

- Examinee determines transitioning to 3-EOP-FR-P.1 Response to Imminent Pressurized Thermal Shock Condition, is required

Required Materials:

- 3-EOP-F-0, Critical Safety Function Status Trees

General References:

- 3-EOP-F-0, Critical Safety Function Status Trees
- 0-ADM-211 Emergency and Off-Normal Operating Procedure Usage

Initiating Cue:

- You have been directed to perform 3-EOP-F-0, Critical Safety Function Status Trees and report any Red or Orange Paths.
- Notify the SRO of any required actions and priorities by writing them down on Attachment 2 and presenting them to the Examiner.

Time Critical Task: No

Validation Time: 10 minutes

HAND JPM BRIEFING SHEET TO EXAMINEE AT THIS TIME!

SIMULATOR SETUP

Reset to IC #

Load Lesson

Ensure Simulator Examinee Checklist is complete

Denote critical steps with a check mark(√)

Start Time _____

STEP 1 :	Obtain 3-EOP-F-0, Critical Safety Function Status Trees. (From the initiating cue.)	____ SAT ____ UNSAT
Standard:	3-EOP-F-0, Critical Safety Function Status Trees is obtained.	
Cue	Provide a copy of 3-EOP-F-0, Critical Safety Function Status Trees.	
Comment		

Procedure Note	**NOTES** • *Critical Safety Function Status Trees are normally monitored by the Shift Technical Advisor. Performance of this procedure may be assigned to other qualified personnel with Nuclear Plant Supervisor approval.* • *A form similar to ATTACHMENT 2 may be used to report each performance of Steps 1 and 2.*	
STEP 2 :	**1** **Determine Containment Conditions** a. Check containment temperature - LESS THAN 180°F • TE-3-6700 • TE-3-6701 • TE-3-6702 a. Use adverse containment setpoints **AND** go to Step 2.	____ SAT ____ UNSAT
Standard:	From Initial Conditions Examinee observes Containment Temperature to be 272 ° Examinee concludes Containment atmosphere is adverse and proceeds to Step 2.	
Cue		
Comment		
NOTE:		

STEP 3 :	2 Monitor Critical Safety Functions Using Rules Of Usage Provided In ATTACHMENT 1	___ SAT ___ UNSAT
Standard:	Examinee proceeds to Attachment 1 of 3-EOP-F-0, Critical Safety Function Status Trees.	
Cue		
Comment		
NOTE:		

STEP 4 :	Review Critical Safety Functions 1. Critical Safety Function Status Trees shall be monitored in the following order of priority: a. Subcriticality using Enclosure 1 b. Core Cooling using Enclosure 2 c. Heat Sink using Enclosure 3 d. Integrity using Enclosure 4 e. Containment using Enclosure 5 f. Inventory: 1) IF RVLMS in service, THEN use Enclosure 6. 2) IF RVLMS NOT in service, THEN use Enclosure 7.	____ SAT ____ UNSAT
Standard:	Examinee reviews Critical Safety Functions using guidance provided in Attachment 1 of 3-EOP-F-0, Critical Safety Function Status Trees.	
Cue		
Comment		
NOTE:		

STEP 5	Monitor Subcriticality using Enclosure 1 **NOTE** *When adverse containment conditions exist, use Gamma-Metrics indication.* 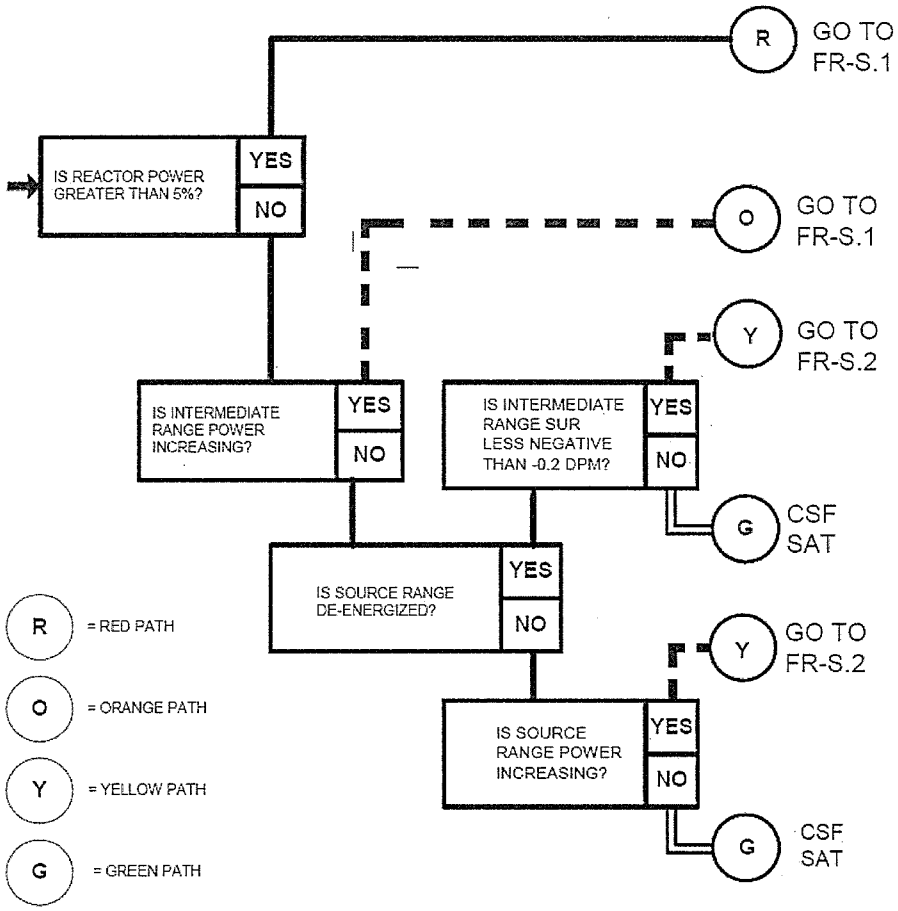 	___ SAT ___ UNSAT
Standard:	Examinee monitors Subcriticality using Enclosure 1, determines CSF for Subcriticality to be (SAT) Green and proceeds to Enclosure 2	
Cue		
Comment		
NOTE:		

STEP 6 :	Monitor Core Cooling using Enclosure 2 **NOTE** *Obtain core exit temperature using at least five of the hottest core exit thermocouples.*	___ SAT ___ UNSAT

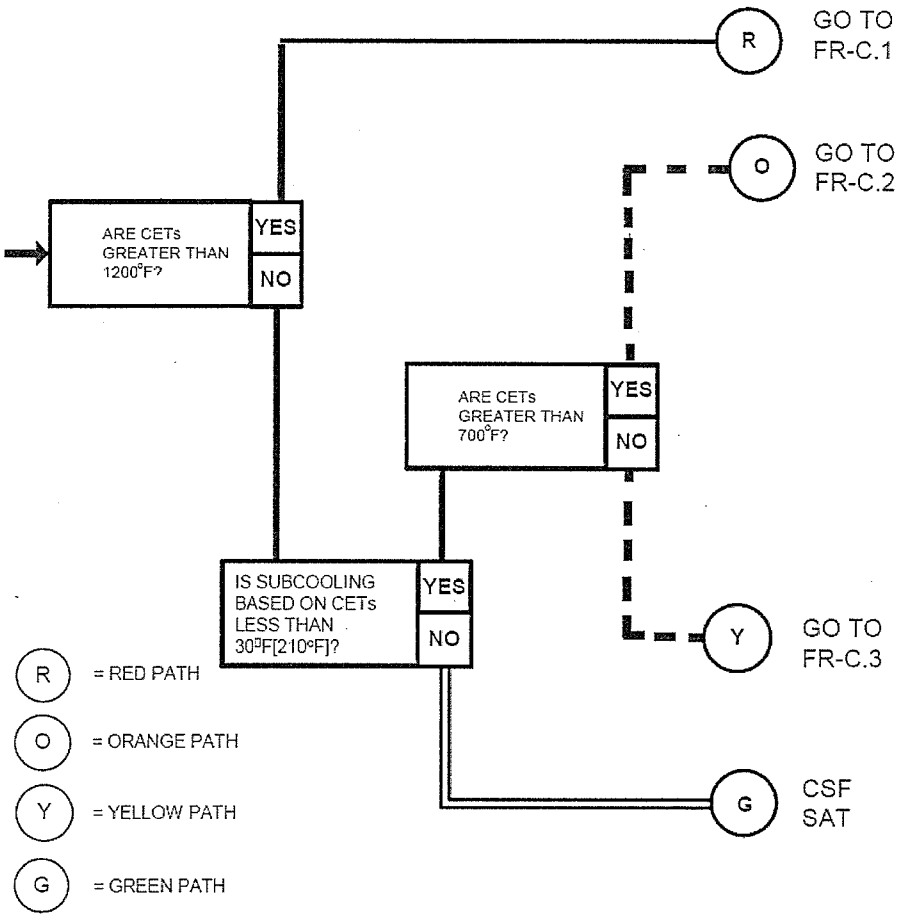

Standard:	Examinee monitors Core Cooling Monitored using Enclosure 2 using Enclosure 2, determines CSF for Core Cooling to be Yellow FR-C.3 and proceeds to Enclosure 3	
Cue		
Comment		
NOTE:	IF a NOT satisfied condition (YELLOW PATH) is diagnosed, THEN the operator shall continue to check the status of all remaining critical safety functions. IF no extreme or severe challenges exist, THEN it is the operator's option to continue optimal recovery procedures OR to initiate functional restoration of the affected critical safety function challenge.	

STEP 7 :	Monitor Heat Sink using Enclosure 3	____ SAT ____ UNSAT

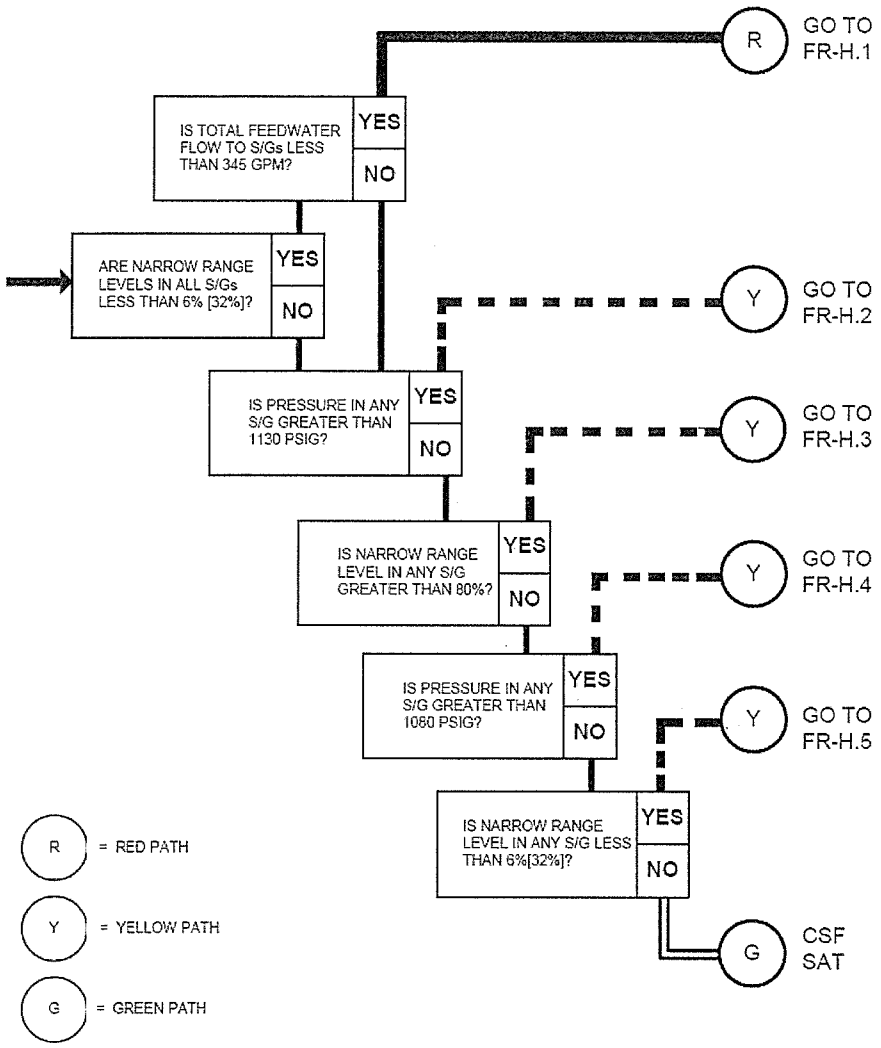

Standard:	Examinee monitors Heat Sink using Enclosure 3, determines CSF for Heat Sink to be Yellow FR-H.5 and proceeds to Enclosure 4	
Cue		
Comment		
NOTE:	IF a NOT satisfied condition (YELLOW PATH) is diagnosed, THEN the operator shall continue to check the status of all remaining critical safety functions. IF no extreme or severe challenges exist, THEN it is the operator's option to continue optimal recovery procedures OR to initiate functional restoration of the affected critical safety function challenge.	

STEP 8 : ✓	Monitor Integrity using Enclosure 4	___ SAT ___ UNSAT
Standard:	Examinee monitors Integrity using Enclosure 4, determines CSF for Integrity to be Orange FR-P.1 and proceeds to Enclosure 5	
Cue		
Comment		
NOTE:	IF a severe challenge (ORANGE PATH) is diagnosed, THEN the operator shall continue to check the status of all remaining critical safety functions. IF no extreme challenges exist, THEN the operator shall stop procedure in effect AND initiate functional restoration to restore the highest priority critical safety function under severe challenge.	

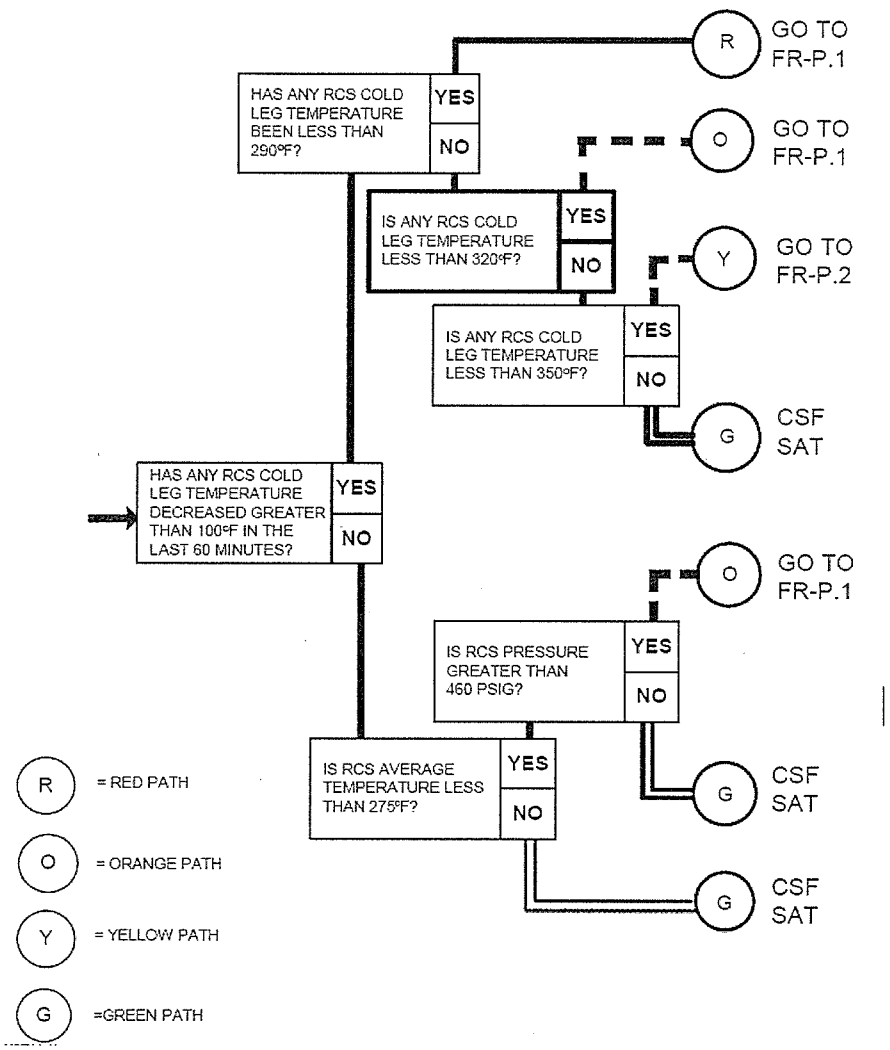

STEP 9 : ✓	Monitor Containment using Enclosure 5	___ SAT ___ UNSAT

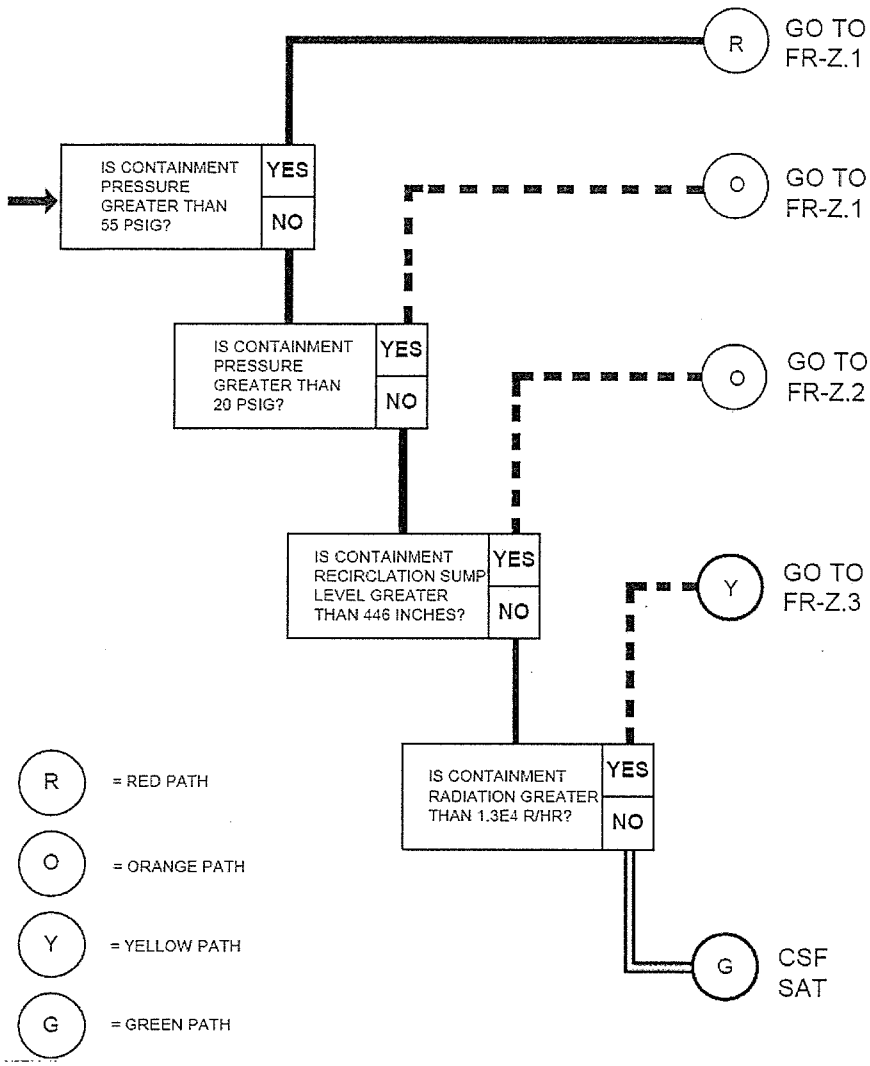

Standard:	Examinee monitors Containment using Enclosure 5, determines CSF for Containment to be Orange FR-Z.1 and proceeds to Enclosure 6	
Cue		
Comment		
NOTE:	IF a severe challenge (ORANGE PATH) is diagnosed, THEN the operator shall continue to check the status of all remaining critical safety functions. IF no extreme challenges exist, THEN the operator shall stop procedure in effect AND initiate functional restoration to restore the highest priority critical safety function under severe challenge.	

STEP 10 :	Monitor Inventory with RVLMS using Enclosure 6	___ SAT ___ UNSAT

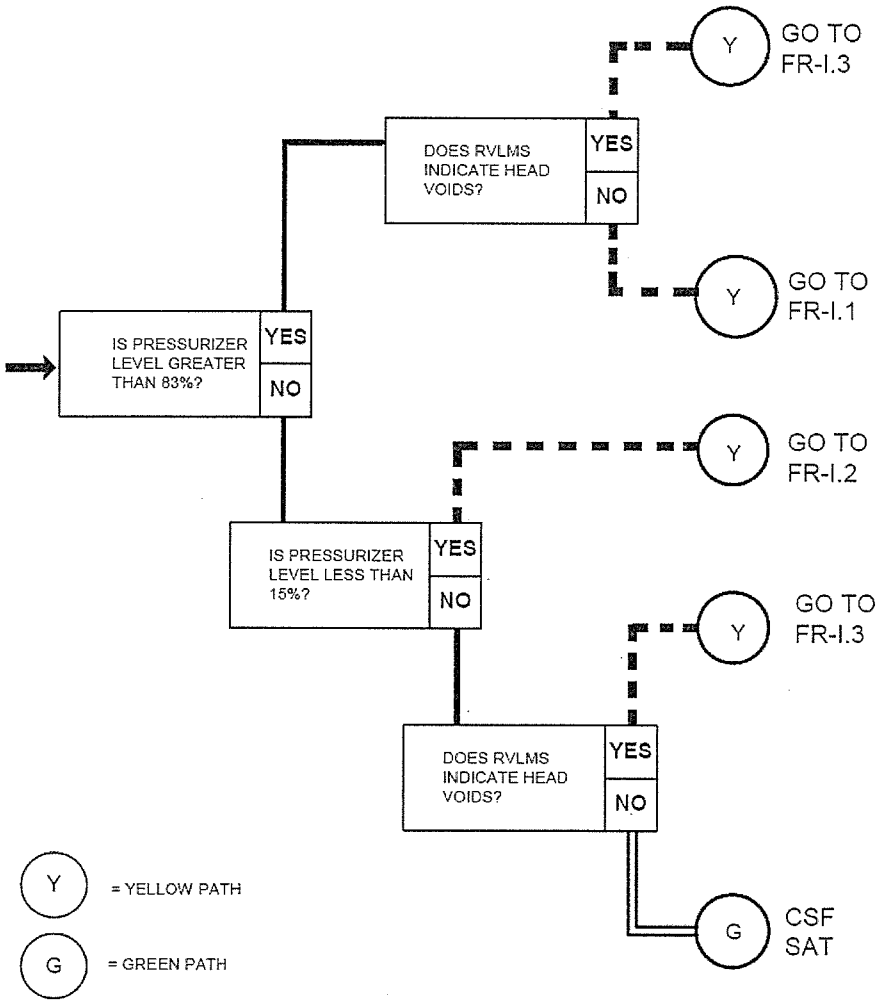

Standard:	Examinee monitors Inventory using Enclosure 6, determines CSF for Containment to be Yellow FR-I.2 and refers to Attachment 1	
Cue		
Comment		
NOTE:	IF a NOT satisfied condition (YELLOW PATH) is diagnosed, THEN the operator shall continue to check the status of all remaining critical safety functions. IF no extreme or severe challenges exist, THEN it is the operator's option to continue optimal recovery procedures OR to initiate functional restoration of the affected critical safety function challenge.	

STEP 11 : √	Evaluate Critical Safety Functions using Attachment 1 and record results on Attachment 2 and recommend transition to functional restoration procedure.	____ SAT ____ UNSAT
Standard:	Examinee determines no severe (Red Path) challenges exist. **AND** Examinee determines extreme (Orange Path) challenge exists for the INTEGRITY safety function. **AND** Examinee recommends transitioning to 4-EOP-FR-P.1 Response to Imminent Pressurized Thermal Shock Condition.	
Cue		
Comment		
NOTE:	IF a severe challenge (ORANGE PATH) is diagnosed, THEN the operator shall continue to check the status of all remaining critical safety functions. IF no extreme challenges exist, THEN the operator shall stop procedure in effect AND initiate functional restoration to restore the highest priority critical safety function under severe challenge. Critical Safety Function Status Trees shall be monitored in the following order of priority: a. Subcriticality using Enclosure 1 b. Core Cooling using Enclosure 2 c. Heat Sink using Enclosure 3 d. Integrity using Enclosure 4 e. Containment using Enclosure 5 f. Inventory:	
Terminating Cue:	**The task is complete when the Examinee returns the cue sheet to the examiner.**	**STOP**

Stop Time _____

Verification of Completion

Job Performance Measure No. R.A.4

Examinee's Name: _____

Examiner's Name: _____

Date Performed: _____

Facility Evaluator: _____

Number of Attempts: _____

Time to Complete: _____

Question Documentation:

Question:

_____

_____

_____

_____

_____

Response:

_____

_____

_____

_____

_____

Result: Satisfactory/Unsatisfactory

Examiner's signature and date: _____ _____

R.A. 4 KEY

STEP	ACTION/EXPECTED RESPONSE	RESPONSE NOT OBTAINED

NOTES

- *Critical Safety Function Status Trees are normally monitored by the Shift Technical Advisor. Performance of this procedure may be assigned to other qualified personnel with Nuclear Plant Supervisor approval.*
- *A form similar to ATTACHMENT 2 may be used to report each performance of Steps 1 and 2.*

1 Determine Containment Conditions

a. Check containment temperature - LESS THAN 180°F

- TE-3-6700
- TE-3-6701
- TE-3-6702

NO →

a. Use adverse containment setpoints AND go to Step 2.

b. Check containment radiation - HAS REMAINED LESS THAN 1.3×10^5 R/HR

b. Perform the following:

1) IF containment radiation is currently greater than or equal to 1.3×10^5 R/hr, THEN use adverse containment setpoints AND go to Step 2.

2) Consult with TSC staff to determine integrated dose to containment.

3) IF integrated dose is greater than or equal to 10^6 Rads OR integrated dose is NOT known, THEN use adverse containment setpoints AND go to Step 2.

c. Use normal containment setpoints

2 Monitor Critical Safety Functions Using Rules Of Usage Provided In ATTACHMENT 1

3 Report Results To Control Room Operators AND TSC Staff

STEP	ACTION/EXPECTED RESPONSE	RESPONSE NOT OBTAINED
4	Determine If Critical Safety Function Monitoring Can Be Stopped * The emergency condition has been corrected AND a transition to the appropriate plant procedure has been performed OR * The plant is stable in Cold Shutdown with RHR cooling established OR * TSC staff has determined that Critical Safety Function monitoring is no longer required	WHEN additional Critical Safety Function monitoring is required by ATTACHMENT 1, THEN observe NOTES prior to Step 1 AND return to Step 1. Continue with procedure AND step in effect.
5	Return To Procedure AND Step In Effect	

END OF TEXT

STEP	ACTION/EXPECTED RESPONSE	RESPONSE NOT OBTAINED

ENCLOSURE 1
(Page 1 of 1)
CSF F-0.1 SUBCRITICALITY

NOTE

When adverse containment conditions exist, use Gamma-Metrics indication.

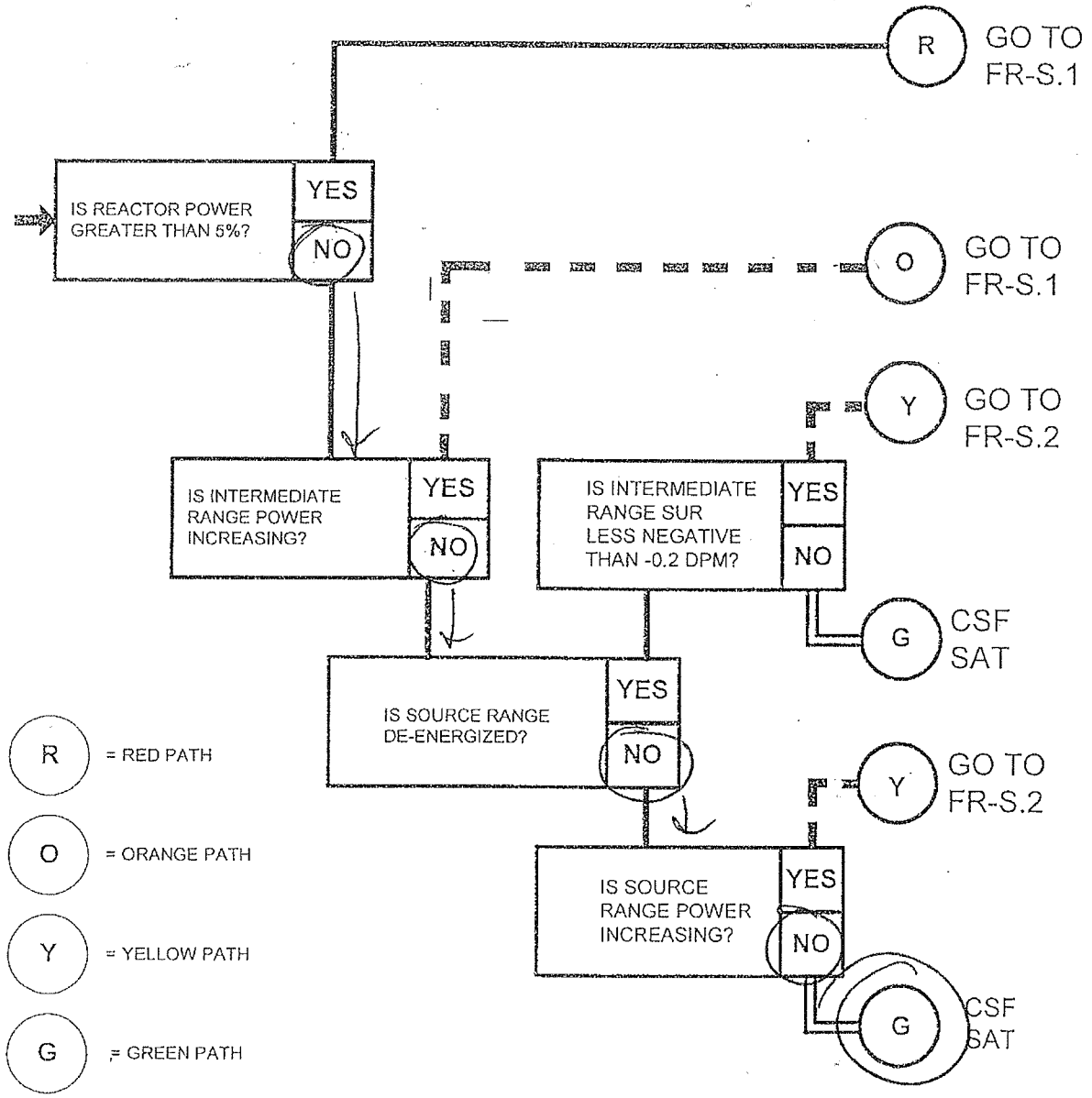

W97/daj/nw

STEP	ACTION/EXPECTED RESPONSE	RESPONSE NOT OBTAINED

ENCLOSURE 2
(Page 1 of 1)
CSF F-0.2 CORE COOLING

NOTE

Obtain core exit temperature using at least five of the hottest core exit thermocouples.

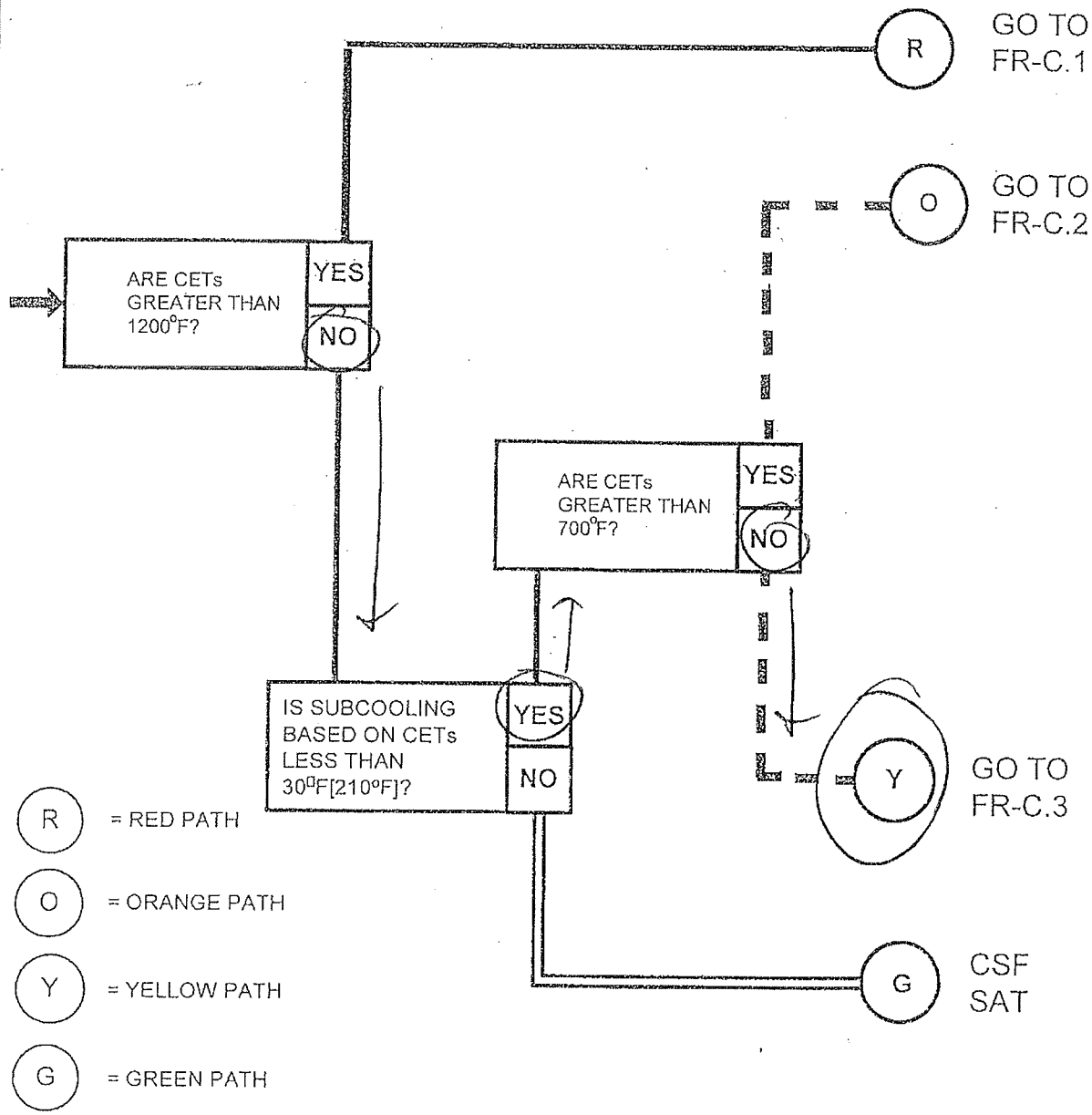

W97/daj/nw

STEP	ACTION/EXPECTED RESPONSE	RESPONSE NOT OBTAINED

ENCLOSURE 3
(Page 1 of 1)

CSF F-0.3 HEAT SINK

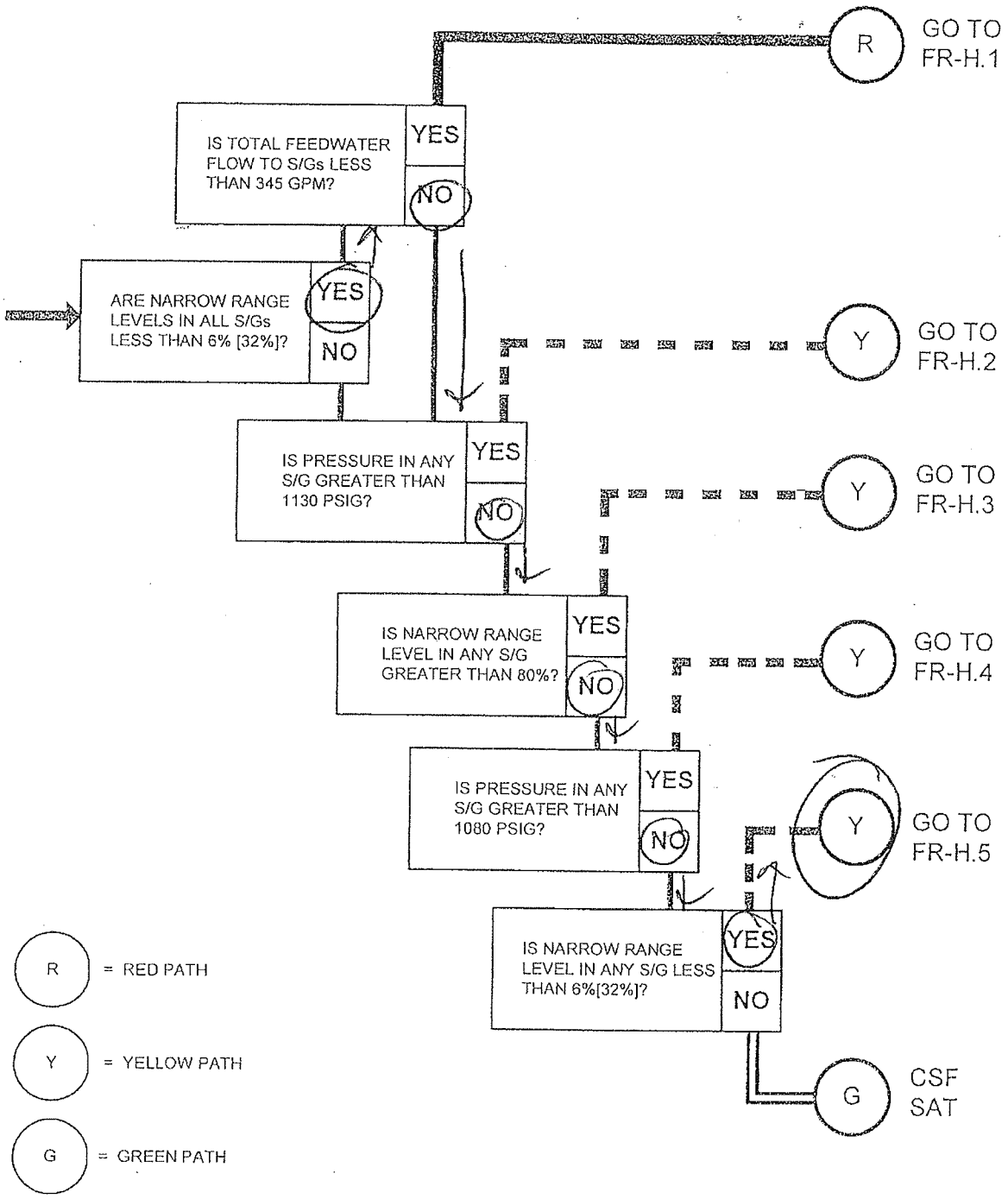

STEP	ACTION/EXPECTED RESPONSE	RESPONSE NOT OBTAINED

ENCLOSURE 4
(Page 1 of 1)

CSF F-0.4 INTEGRITY

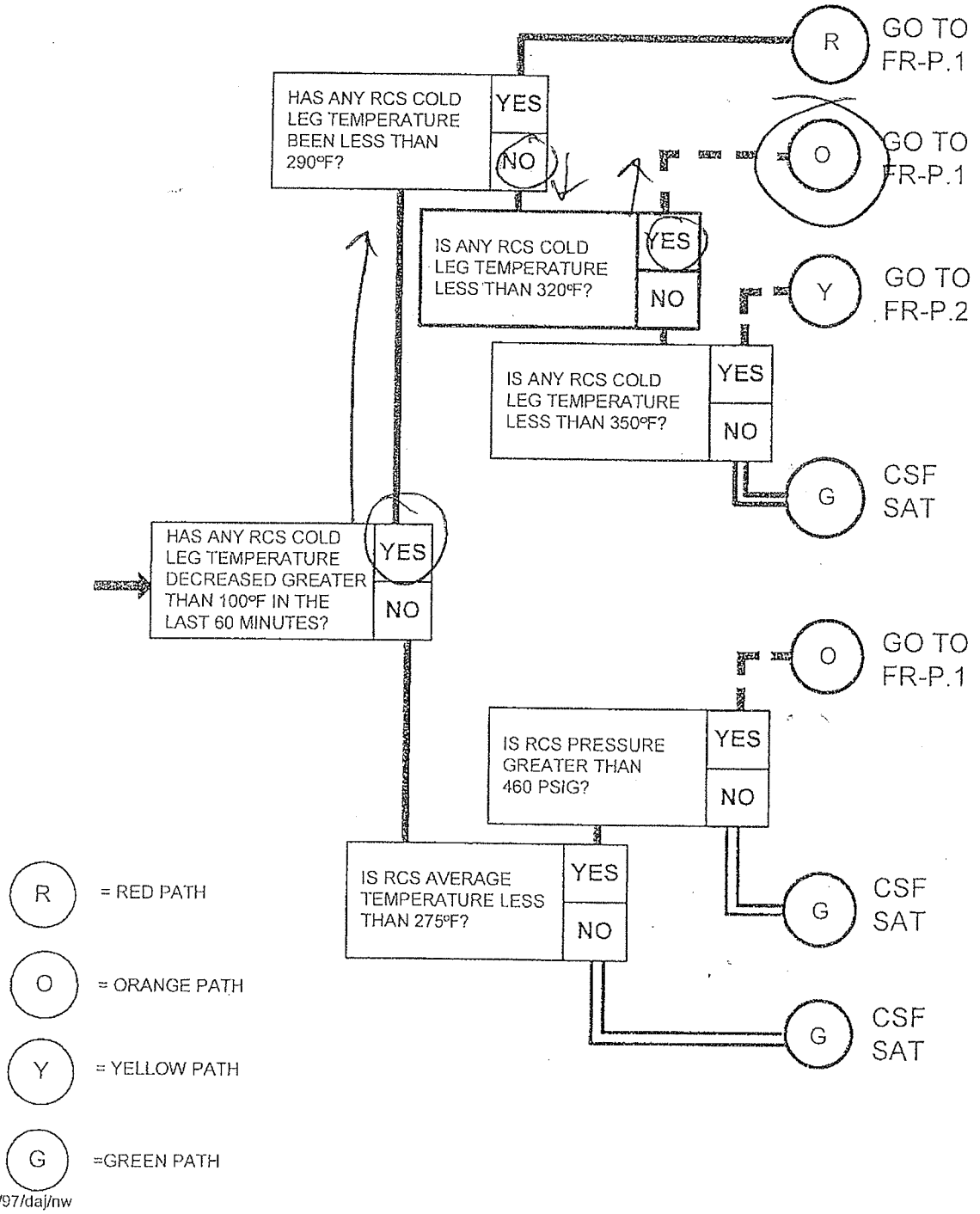

W97/daj/nw

STEP	ACTION/EXPECTED RESPONSE	RESPONSE NOT OBTAINED

ENCLOSURE 5
(Page 1 of 1)

CSF F-0.5 CONTAINMENT

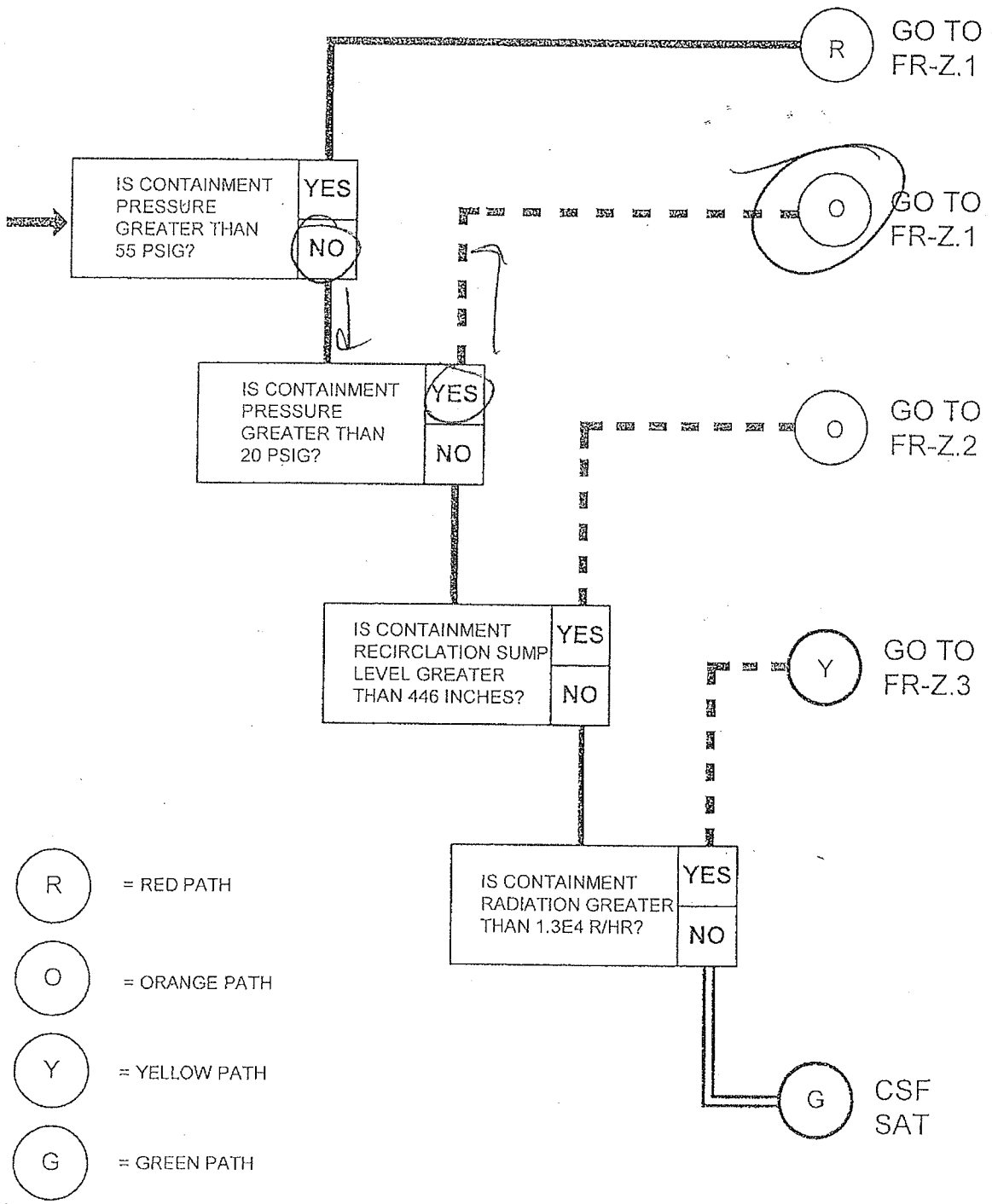

W97/daj/nw

STEP	ACTION/EXPECTED RESPONSE	RESPONSE NOT OBTAINED

ENCLOSURE 6
(Page 1 of 1)

CSF F-0.6 INVENTORY (WITH RVLMS)

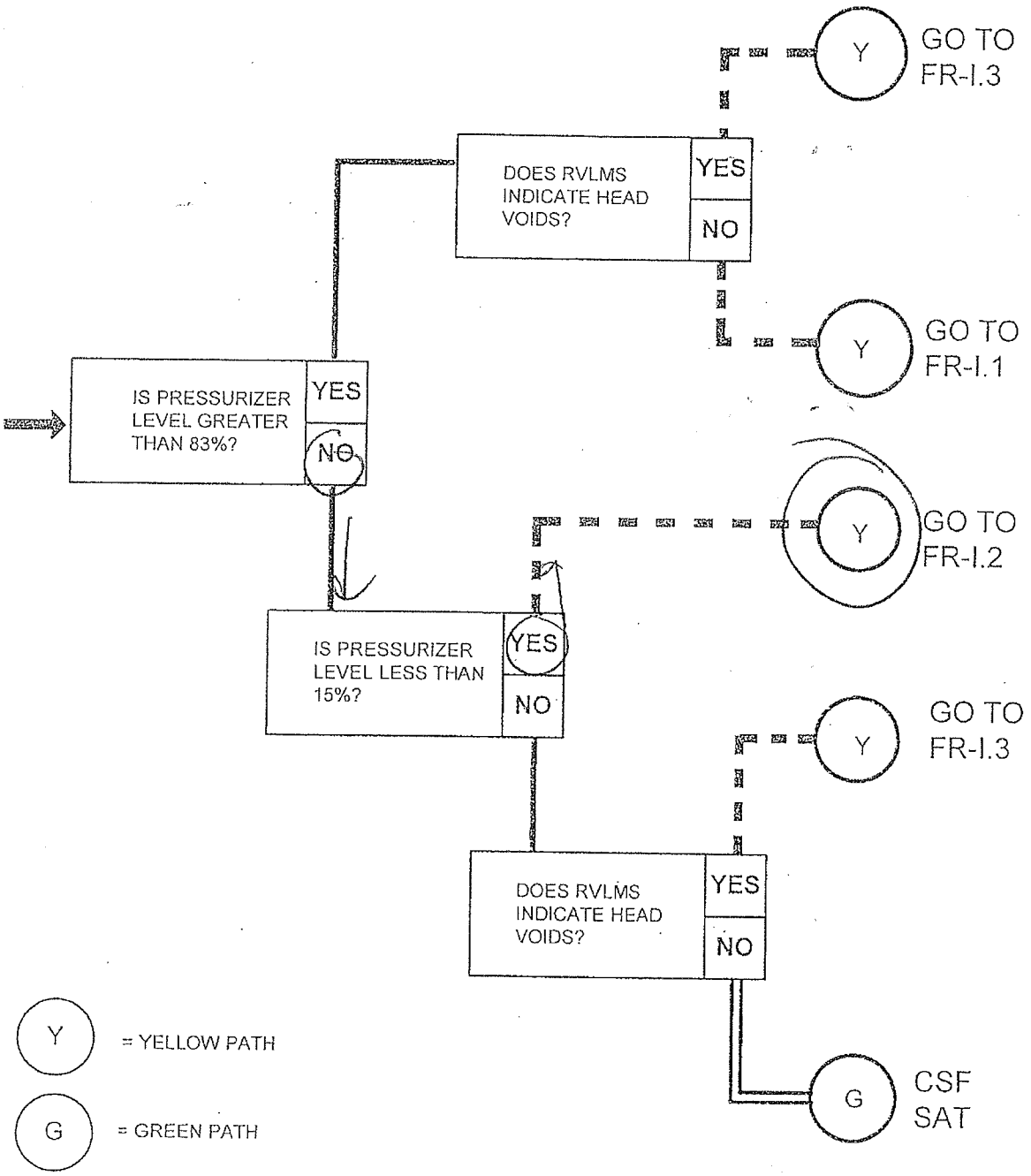

STEP	ACTION/EXPECTED RESPONSE	RESPONSE NOT OBTAINED

ENCLOSURE 7
(Page 1 of 1)

CSF F-0.7 INVENTORY (WITHOUT RVLMS)

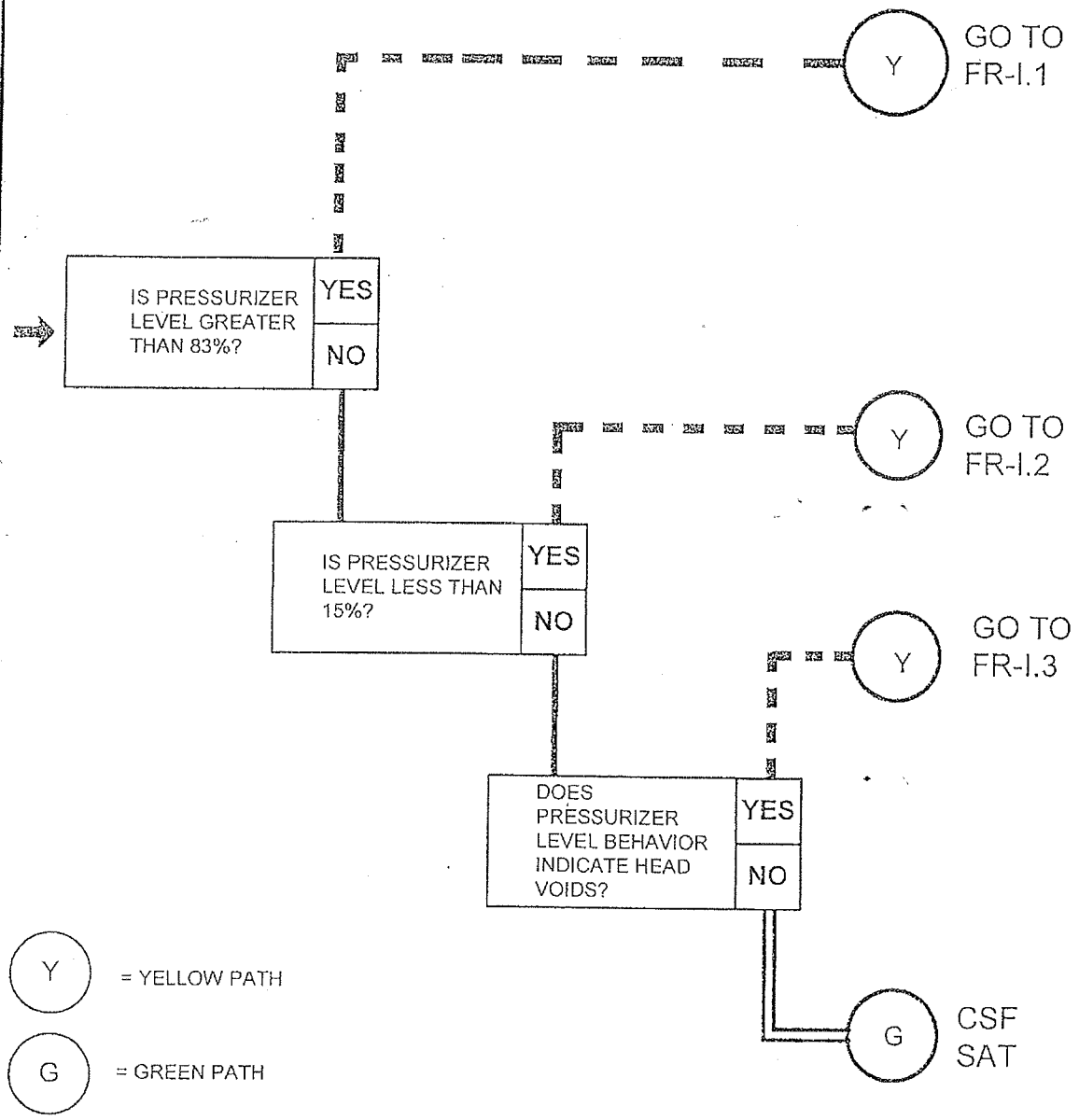

STEP	ACTION/EXPECTED RESPONSE	RESPONSE NOT OBTAINED

ATTACHMENT 1
(Page 1 of 2)

RULES OF USAGE FOR CRITICAL SAFETY FUNCTION STATUS TREES

1. Critical Safety Function Status Trees shall be monitored in the following order of priority:

   a. Subcriticality using Enclosure 1

   b. Core Cooling using Enclosure 2

   c. Heat Sink using Enclosure 3

   d. Integrity using Enclosure 4

   e. Containment using Enclosure 5

   f. Inventory:

      1) IF RVLMS in service, THEN use Enclosure 6.

      2) IF RVLMS NOT in service, THEN use Enclosure 7.

NOTE

Notes or cautions within EOPs which prohibit the use of functional restoration procedures shall take precedence over the following rules.

2. IF an extreme challenge (RED PATH) is diagnosed, THEN the operator shall immediately stop procedure in effect AND initiate functional restoration to restore the critical safety function under extreme challenge.

3. IF a severe challenge (ORANGE PATH) is diagnosed, THEN the operator shall continue to check the status of all remaining critical safety functions. IF no extreme challenges exist, THEN the operator shall stop procedure in effect AND initiate functional restoration to restore the highest priority critical safety function under severe challenge.

4. IF a NOT satisfied condition (YELLOW PATH) is diagnosed, THEN the operator shall continue to check the status of all remaining critical safety functions. IF no extreme or severe challenges exist, THEN it is the operator's option to continue optimal recovery procedures OR to initiate functional restoration of the affected critical safety function challenge.

STEP	ACTION/EXPECTED RESPONSE	RESPONSE NOT OBTAINED

ATTACHMENT 1
(Page 2 of 2)

RULES OF USAGE FOR CRITICAL SAFETY FUNCTION STATUS TREES

5. IF a satisfied condition (GREEN PATH) is diagnosed, THEN no challenge exists for the affected critical safety function and the operator shall continue to check the status of all remaining critical safety functions.

6. IF during function restoration to address a critical safety function challenge, a higher priority challenge is diagnosed, THEN the operator should terminate the ongoing response AND initiate function restoration to address the higher priority critical safety function challenge.

7. IF an extreme challenge (RED PATH) exists OR a severe challenge (ORANGE PATH) exists OR plant conditions are changing rapidly, THEN critical safety function status trees shall be monitored continuously.

8. IF an extreme challenge (RED PATH) does NOT exist AND a severe challenge (ORANGE PATH) does NOT exist AND plant conditions are NOT changing rapidly, THEN critical safety function status trees shall be monitored every 10 to 20 minutes.

STEP	ACTION/EXPECTED RESPONSE	RESPONSE NOT OBTAINED

ATTACHMENT 2
(Page 1 of 1)

CRITICAL SAFETY FUNCTION REVIEW

1. Today's Date: MM DD YY 09 / 30 / 10

2. Time Monitoring Started: 2:00 am pm

3. Containment Conditions: (Circle current status) NORMAL ADVERSE

4. Critical Safety Function Summary: (Circle current status)

	CRITICAL SAFETY FUNCTION	RED	ORANGE	YELLOW	GREEN
S	Subcriticality	FR-S.1	FR-S.1	FR-S.2	SAT
C	Core Cooling	FR-C.1	FR-C.2	FR-C.3	SAT
H	Heat Sink	FR-H.1		FR-H.2 FR-H.3 FR-H.4 FR-H.5	SAT
P	Integrity	FR-P.1	FR-P.1	FR-P.2	SAT
Z	Containment	FR-Z.1	FR-Z.1 FR-Z.2	FR-Z.3	SAT
I	Inventory			FR-I.1 FR-I.2 FRI.3	SAT

5. Time Monitoring Completed: am pm

FINAL PAGE

Facility:	Turkey Point	Task No:	02201019400
Task Title:	Classify the Event	JPM No:	S.A.4
K/A Reference:	2.4.41 SRO 4.6		
Examinee:		NRC Examiner:	
Facility Evaluator:		Date:	

Method of testing:

Simulated Performance X Actual Performance

Classroom X Simulator Plant

Read to the examinee:

I will explain the initial conditions, which steps to simulate or discuss, and provide initiating cues. When you complete the task successfully, the objective for this job performance measure will be satisfied.

Initial Conditions:

- Unit 3 was manually tripped based on 3-ONOP-071.2 Steam Generator Tube Leakage FOLDOUT PAGE criteria on 3A SG.
- Safety Injection and Containment Isolation Phase A were manually actuated based on 3-ONOP-071.2, Steam Generator Tube Leakage, FOLDOUT PAGE criteria.
- Containment Pressure is 0 psig and stable
- 3-EOP-E-2, Faulted Steam Generator Isolation has been completed.
- 3A Steam Generator Pressure continues to decrease
- 3A Steam Generator WR level is 5% and increasing
- 3B and 3C SG pressures are 900 psig.
- 3B and 3C SG levels are 27%
- Wind speed is 10 mph
- Wind direction is from 120°

Task Standard:

- Classification of Site Area Emergency (FS-1) is declared within 15 minutes of starting the task.
- The Florida Nuclear Plant Emergency Notification Form is completed in accordance 0-EPIP-20134 Offsite Notifications and Protective Action Recommendations, with NO errors on required items identified with a * within 15 minutes of event declaration.

Required Materials:

- 0-EPIP-20101, DUTIES OF EMERGENCY COORDINATOR
- 0-EPIP- 20134, Offsite Notifications and Protective Action Recommendations
- 3-EOP-E-2, Faulted SG isolation might be requested
- 3-ONOP-071.2, Steam generator Tube Leakage might be requested.

General References:

- 0-EPIP-20101, DUTIES OF EMERGENCY COORDINATOR
- 0-EPIP- 20134, Offsite Notifications and Protective Action Recommendations

Initiating Cue:

- You are the Emergency Coordinator in the Control Room. Given the initial conditions classify the event using 0-EPIP-20101, DUTIES OF EMERGENCY COORDINATOR including Protective Action Recommendations, if any.
- Raise your hand as soon as you have classified the event. At that time the examiner will provide you with a copy of the Florida State Notification Form. You will then complete the Florida State Notification Form using 0-EPIP- 20134, Offsite Notifications and Protective Action Recommendations.
- When you have completed the Florida State Notification Form, raise your hand to inform the Examiner you are done.
- There are elements of this task that are Time Critical.

Time Critical Task: Yes

Validation Time: 20 minutes

HAND JPM BRIEFING SHEET TO EXAMINEE AT THIS TIME!

SIMULATOR SETUP

Reset to IC #

N/A

Denote critical steps with a check mark(√)

Start Time _____

STEP 1 :	Obtain 0-EPIP-20101, DUTIES OF EMERGENCY COORDINATOR. (From the initiating cue.)	____ SAT ____ UNSAT
Standard:	0-EPIP-20101, DUTIES OF EMERGENCY COORDINATOR is obtained.	
Cue	Provide a copy of 0-EPIP-20101, DUTIES OF EMERGENCY COORDINATOR and the new EAL book used in the CR..	
EXAMINER NOTE	Annotate the start time for the event classification after the candidate acknowledges that he is ready to begin. Start Time: _____	

STEP 2 :	Review 0-EPIP-20101, DUTIES OF EMERGENCY COORDINATOR. (0-EPIP-20101, Enclosure 1)	____ SAT ____ UNSAT
Standard:	Examinee reviews 0-EPIP-20101, DUTIES OF EMERGENCY COORDINATOR Enclosure 1, for the event depicted in the initial conditions sheet.	
Comment		

NOTE:	Procedure Caution; CAUTION : Consult 0- EPIP- 20134, Attachment 3, for required Protective Action Recommendation	
STEP 3 : √	Classify Off-Normal Event using present available information, AND declare the emergency classification using Enclosure 1. (0-EPIP-20101, Enclosure 1)	____ SAT ____ UNSAT
Standard:	The examinee classifies the event as a Site Area Emergency (FS-1) by interpreting the information given in the initial conditions within 15 minutes of starting the JPM.	
Comment		
EXAMINER NOTE:	The SAE Classification (FS-1) is based on the following: Loss of Containment Barrier • 4.1 Ruptured Steam Generator is also faulted outside containment. **AND** Potential Loss of the RCS Barrier • 2.1 Ruptured Steam Generator results in an SI actuation.	
EXAMINER NOTE:	Annotate the stop time for the event classification here. _____	
EXAMINER NOTE:	Annotate the start time for the Florida State Notification here. _____	

STEP 4 :	Obtain a Florida State Notification Form, F-439.	____ SAT ____ UNSAT
Standard:	Florida State Notification Form, F-439 is obtained.	
Cue	Provide a copy of 0-EPIP-20134, Offsite Notifications and Protective Action Recommendations and Florida State Notification Form, F-439.	
Comment		

STEP 5 :	Review 0-EPIP-20134, Offsite Notifications and Protective Action Recommendations. (0-EPIP-20134, Attachment 3, form F-444)	____ SAT ____ UNSAT
Standard:	Examinee reviews 0-EPIP-20134, or equivalent form F-444, Offsite Notifications and Protective Action Recommendations	
Comment		

STEP 6 : √	Issue Protective Action Recommendations. (0-EPIP-20134, Attachment 3 Note 1)	___ SAT ___ UNSAT
Standard:	Examinee determines the no Protective Action Recommendations exist.	
Comment		

STEP 7 : √	Complete Florida Nuclear Plant Emergency Notification Form. (0-EPIP- 20134, Attachment 1B) (Turkey Point Nuclear Form F 439)	___ SAT ___ UNSAT
Standard:	The examinee completes a Florida Nuclear Plant Emergency Notification Form is with no errors noted on required items annotated by a * within 15 minutes Item 2b (asterisk) is not critical. The date and time of classification on the SNF ,item5, is a critical step.	
Comment		
EXAMINER NOTE:	Step by step instructions for completing the Florida Nuclear Plant Emergency Notification Form are contained within 0-EPIP- 20134, Offsite Notifications and Protective Action Recommendations, Attachment 1B.	
EXAMINER NOTE:	The time critical element is complete when the State Notification Form is complete.	
EXAMINER NOTE:	See the exam key for a copy of the completed State Notification Form	

Terminating Cue:	**The task is complete when the Examinee returns the cue sheet to the examiner.**	**STOP**

Stop Time _____

Verification of Completion

Job Performance Measure No. S.A.4

Examinee's Name: _____

Examiner's Name: _____

Date Performed: _____

Facility Evaluator: _____

Number of Attempts: _____

Time to Complete: _____

Question Documentation:

Question:

_____

_____

_____

_____

_____

Response:

_____

_____

_____

_____

_____

Result: Satisfactory/Unsatisfactory

Examiner's signature and date: _____ _____

FLORIDA NUCLEAR PLANT EMERGENCY NOTIFICATION FORM

Online Verification: ☐ STATE ☐ MIAMI-DADE COUNTY ☐ MONROE COUNTY

*1. A. ☒ This Is A Drill B. ☐ This Is An Actual Event

2. A. Date ___/___/_____ *B. Contact Time:_____ C. Reported by: Name_____

D. Message Number:01_____ E. Reported From: ☐ Control Room ☐ TSC ☐ EOF

F. ☒ Initial/New Classification OR ☐ Update Notification

*3. SITE A. ☐ ~~Crystal River UNIT 3~~ B. ☐ ~~St. Lucie UNIT 1~~ C. ☐ ~~St. Lucie UNIT 2~~

D. ☒ Turkey Point UNIT 3 E. ☐ Turkey Point UNIT 4

*4. EMERGENCY CLASSIFICATION: A. ☐ Notification Of Unusual Event B. ☐ Alert

C. ☒ Site Area Emergency D. ☐ General Emergency

*5. A. ☒ EMERGENCY DECLARATION: B. ☐ EMERGENCY TERMINATION Date: XX /XX /XX Time: XXXX

*6. REASON FOR EMERGENCY DECLARATION:** A. ☒ EAL Number:FS-1_____OR B. ☐ Description_____

7. ADDITIONAL INFORMATION OR UPDATE: A. ☒ None OR B. ☐ Description_____

*8. WEATHER DATA: A. Wind direction from 120 degrees. B. Downwind Sectors Affected N,P,Q

*9. RELEASE STATUS: A. ☐ None (Go to Item 11) B. ☒ In Progress C. ☐ Has occurred, but stopped (go to Item 11)

10. RELEASE SIGNIFICANCE CATEGORY (at the Site Boundary)

A. ☒ Under evaluation B. ☐ Release within Normal Operating Limits (Tech Specs)

C. ☐ Non-Significant (Fraction of PAG Range) D. ☐ PAG Range (Protective Actions required)

E. ☐ Liquid release (no actions required)

11. UTILITY RECOMMENDED PROTECTIVE ACTIONS FOR THE PUBLIC:

A. ☒ No recommended actions at this time. B. ☐ The utility recommends the following protective actions:

EVACUATE ZONES:NOT APPLICABLE OR

SHELTER ZONES:NOT APPLICABLE

Miles	Evacuate Sectors	Shelter Sectors	No Action Sectors
0 - 2			
2 - 5			
5 - 10			

AND consider issuance of potassium iodide (KI)

If form is completed in the Control Room, go to item 15. If completed in the TSC or EOF, continue with item 12.

12. PLANT CONDITIONS:

A. Reactor Shutdown? ☐ YES ☐ NO B. Core Adequately Cooled? ☐ YES ☐ NO

C. Containment Intact? ☐ YES ☐ NO D. Core Condition: ☐ Stable ☐ Degrading

13. WEATHER DATA: A. Wind Speed_____mph B. Stability Class_____

14. ADDITIONAL RELEASE INFORMATION: A. ☐ Not applicable (Go to Item 15)

Distance	Projected Thyroid Dose (CDE) for 1 Hour	Projected Total Dose (TEDE) for 1 Hour
1 Mile (Site Boundary)	B._____mrem	C._____mrem
2 Miles	D._____mrem	E._____mrem
5 Miles	F._____mrem	G._____mrem
10 Miles	H._____mrem	I._____mrem

15. (Do not read to State) EC or RM Approval SignatureXXCandidates Signature_____DateXX/XX/XX TimeXXXX

MESSAGE RECEIVED BY: Name_____Date___/___/___ Time_____

* IF EMERGENCY CLASS ESCALATION IS KNOWN TO BE NECESSARY AND A NEW NOTIFICATION FORM WILL BE TRANSMITTED WITHIN 15 MINUTES, THEN YOU MAY GO TO EC/RM APPROVAL SIGNATURE LINE.

* ITEMS ARE EVALUATED FOR NRC PERFORMANCE INDICATORS (PIs)

FLORIDA NUCLEAR PLANT EMERGENCY NOTIFICATION FORM

METEOROLOGICAL WORKSHEET

SECTOR REFERENCE:

The chart below can be used to determine sectors affected by a radiological release, through comparison with wind direction from the meteorological recorders in the Control Room.

If the wind direction is directly on the edge of two sectors (e.g., 11°, 33°, 56°, etc.), an additional sector should be added to the protective action recommendations. For example, if the wind direction is from 78°, then the affected sectors for PARs should be L, M, N and P.

SECTOR INFORMATION:

WIND SECTOR	WIND FROM	DEGREES	WIND TOWARD	SECTORS AFFECTED
[A]	N	348-11	S	HJK
[B]	NNE	11-33	SSW	JKL
[C]	NE	33-56	SW	KLM
[D]	ENE	56-78	WSW	LMN
[E]	E	78-101	W	MNP
[F]	ESE	101-123	WNW	NPQ
[G]	SE	123-146	NW	PQR
[H]	SSE	146-168	NNW	QRA
[J]	S	168-191	N	RAB
[K]	SSW	191-213	NNE	ABC
[L]	SW	213-236	NE	BCD
[M]	WSW	236-258	ENE	CDE
[N]	W	258-281	E	DEF
[P]	WNW	281-303	ESE	EFG
[Q]	NW	303-326	SE	FGH
[R]	NNW	326-348	SSE	GHJ

STABILITY CLASSIFICATION REFERENCE:

Either ERDADS or the below chart can be used to determine atmospheric stability classification for notification to the State of Florida. Primary method is from ΔT via the South Dade (60 meter) tower. Backup method is from Sigma Theta via the Ten Meter Tower. If neither meteorological tower is available, Stability Classification shall be determined using data from National Weather Service (See 0-EPIP-20126, Off-site Dose Calculations).

CLASSIFICATION OF ATMOSPHERIC STABILITY:

Stability Classification	Pasquill Categories	Primary Delta T (°F)	Backup Sigma Theta Range (Degrees)
Extremely unstable	A	$\Delta T \leq -1.7$	$ST \geq 22.5$
Moderately unstable	B	$-1.7 < \Delta T \leq -1.5$	$22.5 > ST \geq 17.5$
Slightly unstable	C	$-1.5 < \Delta T \leq -1.4$	$17.5 > ST \geq 12.5$
Neutral	D	$-1.4 < \Delta T \leq -0.5$	$12.5 > ST \geq 7.5$
Slightly stable	E	$-0.5 < \Delta T \leq +1.4$	$7.5 > ST \geq 3.8$
Moderately stable	F	$+1.4 < \Delta T \leq +3.6$	$3.8 > ST \geq 2.1$
Extremely stable	G	$+3.6 < \Delta T$	$2.1 > ST$

Meteorological information needed to fill out the Florida Nuclear Plant Emergency Notification Form is available from the Dose Calculation Worksheet (0-EPIP-20126). The Worksheet shall be filled out by Chemistry and given to the Emergency Coordinator.

S.A.4 Key

FLORIDA NUCLEAR PLANT EMERGENCY NOTIFICATION FORM

Online Verification: ☐ STATE ☐ MIAMI-DADE COUNTY ☐ MONROE COUNTY

*1. A. ☒ This Is A Drill B. ☐ This Is An Actual Event

2. A. Date ___/___/___ *B. Contact Time:_____ C. Reported by: Name_____

D. Message Number:_____ E. Reported From: ☐ Control Room ☐ TSC ☐ EOF

F. ☐ Initial/New Classification OR ☐ Update Notification

*3. SITE A. ☐ ~~Crystal River UNIT 3~~ B. ☐ ~~St. Lucie UNIT 1~~ C. ☐ ~~St. Lucie UNIT 2~~

D. ☒ Turkey Point UNIT 3 E. ☐ Turkey Point UNIT 4

*4. EMERGENCY CLASSIFICATION: A. ☐ Notification Of Unusual Event B. ☐ Alert

C. ☒ Site Area Emergency D. ☐ General Emergency

*5. A. ☒ EMERGENCY DECLARATION: B. ☐ EMERGENCY TERMINATION Date: ___/___/___ Time:_____

*6. REASON FOR EMERGENCY DECLARATION:** A. ☒ EAL Number: FS1 (OR) B. ☐ Description 3A S/G RUPTURED & 3A S/G FAULTED TO ATMOS.

7. ADDITIONAL INFORMATION OR UPDATE: A. ☐ None OR B. ☐ Description_____

*8. WEATHER DATA: A. Wind direction from 120 degrees. B. Downwind Sectors Affected N, P, Q

*9. RELEASE STATUS: A. ☐ None (Go to Item 11) B. ☒ In Progress C. ☐ Has occurred, but stopped (go to Item 11)

10. RELEASE SIGNIFICANCE CATEGORY (at the Site Boundary)

A. ☒ Under evaluation B. ☐ Release within Normal Operating Limits (Tech Specs)

C. ☐ Non-Significant (Fraction of PAG Range) D. ☐ PAG Range (Protective Actions required)

E. ☐ Liquid release (no actions required)

*11. UTILITY RECOMMENDED PROTECTIVE ACTIONS FOR THE PUBLIC:

A. ☒ No recommended actions at this time. B. ☐ The utility recommends the following protective actions:

EVACUATE ZONES: NOT APPLICABLE OR

SHELTER ZONES: NOT APPLICABLE

Miles	Evacuate Sectors	Shelter Sectors	No Action Sectors
0 - 2			
2 - 5			
5 - 10			

AND consider issuance of potassium iodide (KI)

If form is completed in the Control Room, go to Item 15. If completed in the TSC or EOF, continue with Item 12.

12. PLANT CONDITIONS:

A. Reactor Shutdown? ☐ YES ☐ NO B. Core Adequately Cooled? ☐ YES ☐ NO

C. Containment Intact? ☐ YES ☐ NO D. Core Condition: ☐ Stable ☐ Degrading

13. WEATHER DATA: A. Wind Speed_____mph B. Stability Class_____

14. ADDITIONAL RELEASE INFORMATION: A. ☐ Not applicable (Go to Item 16)

Distance	Projected Thyroid Dose (CDE) for 1 Hour	Projected Total Dose (TEDE) for 1 Hour
1 Mile (Site Boundary)	B._____mrem	C._____mrem
2 Miles	D._____mrem	E._____mrem
5 Miles	F._____mrem	G._____mrem
10 Miles	H._____mrem	I._____mrem

15. (Do not read to State) EC or RM Approval Signature_____ Date___/___/___ Time_____

MESSAGE RECEIVED BY: Name_____ Date___/___/___ Time_____

** IF EMERGENCY CLASS ESCALATION IS KNOWN TO BE NECESSARY AND A NEW NOTIFICATION FORM WILL BE TRANSMITTED WITHIN 15 MINUTES, THEN YOU MAY GO TO EC/RM APPROVAL SIGNATURE LINE.

* ITEMS ARE EVALUATED FOR NRC PERFORMANCE INDICATORS (PIs)

S. A. 4 Key

FLORIDA NUCLEAR PLANT EMERGENCY NOTIFICATION FORM

METEOROLOGICAL WORKSHEET

SECTOR REFERENCE:

The chart below can be used to determine sectors affected by a radiological release, through comparison with wind direction from the meteorological recorders in the Control Room.

If the wind direction is directly on the edge of two sectors (e.g., 11°, 33°, 56°, etc.), an additional sector should be added to the protective action recommendations. For example, if the wind direction is from 78°, then the affected sectors for PARs should be L, M, N and P.

SECTOR INFORMATION:

WIND SECTOR	WIND FROM	DEGREES	WIND TOWARD	SECTORS AFFECTED
[A]	N	348-11	S	HJK
[B]	NNE	11-33	SSW	JKL
[C]	NE	33-56	SW	KLM
[D]	ENE	56-78	WSW	LMN
[E]	E	78-101	W	MNP
[F]	ESE	101-123	WNW	NPQ
[G]	SE	123-146	NW	PQR
[H]	SSE	146-168	NNW	QRA
[J]	S	168-191	N	RAB
[K]	SSW	191-213	NNE	ABC
[L]	SW	213-236	NE	BCD
[M]	WSW	236-258	ENE	CDE
[N]	W	258-281	E	DEF
[P]	WNW	281-303	ESE	EFG
[Q]	NW	303-326	SE	FGH
[R]	NNW	326-348	SSE	GHJ

STABILITY CLASSIFICATION REFERENCE:

Either ERDADS or the below chart can be used to determine atmospheric stability classification for notification to the State of Florida. Primary method is from ΔT via the South Dade (60 meter) tower. Backup method is from Sigma Theta via the Ten Meter Tower. If neither meteorological tower is available, Stability Classification shall be determined using data from National Weather Service (See 0-EPIP-20126, Off-site Dose Calculations).

CLASSIFICATION OF ATMOSPHERIC STABILITY:

Stability Classification	Pasquill Categories	Primary Delta T (°F)	Backup Sigma Theta Range (Degrees)
Extremely unstable	A	$\Delta T \leq -1.7$	$ST \geq 22.5$
Moderately unstable	B	$-1.7 < \Delta T \leq -1.5$	$22.5 > ST \geq 17.5$
Slightly unstable	C	$-1.5 < \Delta T \leq -1.4$	$17.5 > ST \geq 12.5$
Neutral	D	$-1.4 < \Delta T \leq -0.5$	$12.5 > ST \geq 7.5$
Slightly stable	E	$-0.5 < \Delta T \leq +1.4$	$7.5 > ST \geq 3.8$
Moderately stable	F	$+1.4 < \Delta T \leq +3.6$	$3.8 > ST \geq 2.1$
Extremely stable	G	$+3.6 < \Delta T$	$2.1 > ST$

Meteorological information needed to fill out the Florida Nuclear Plant Emergency Notification Form is available from the Dose Calculation Worksheet (0-EPIP-20126). The Worksheet shall be filled out by Chemistry and given to the Emergency Coordinator.

S. A.4 Key

ATTACHMENT 1B
(Page 1 of 7)

DIRECTIONS FOR COMPLETING THE FLORIDA NUCLEAR PLANT EMERGENCY NOTIFICATION FORM

ITEM ENTRY

NOTE

Online verification occurs when notification of the State Watch Office is initiated.

On-line Verification of Agencies on telephone call - Check the appropriate boxes as the state (Florida Division of Emergency Management) requests that Miami-Dade County and Monroe County get on the line, prior to initiating the notification. All three agencies must be notified through the SWP or alternate means.

If either/both of the counties (Miami-Dade County or Monroe County are not on the line, do not delay the notification: ensure the state will follow-up with contact to the counties or contact the counties directly after completing notification of the state.

Prior to transmitting the completed notification form to the state, ensure that the RM has signed the approval section at the bottom of form.

1. Check appropriate box for drill or actual event as the case may be. During exercises, drills, or tests, each message shall be checked **THIS IS A DRILL.**

2A. Enter today's date.

2B. Enter the time (using the official time, normally synchronized with ERDADS) when contact is made with the State Warning Point or the start time of the RM PAR Briefing. For initial notification of classification, this shall be within 15 minutes of the **Emergency Declaration** time in item 5.

2C. Enter the name of the person making the notification call.

2D. Enter the message number beginning with #1 and following sequentially in all facilities (e.g., if the Control Room transmitted two messages the TSC would start with #3).

2E. Check the box for the facility from which the notification is being made.

2F. Check whether the notification is an initial/new classification or whether it is an hourly update notification.
Criteria for 15 minute notification:
- emergency declaration is the initial notification
- classification in # 4 has changed
- significant change-e.g., change in PARs

3. Site
Check the box for the appropriate plant site for the emergency declaration (both PTN boxes might need to be checked for dual unit events such as approach of a hurricane).

4. Emergency Classification
Check the box corresponding to current accident classification declared.

S.A.4 Key

ATTACHMENT 1B
(Page 2 of 7)

DIRECTIONS FOR COMPLETING THE FLORIDA NUCLEAR PLANT EMERGENCY NOTIFICATION FORM

5. Emergency Declaration or Emergency Termination
Enter the **date** and **time** when the current emergency classification was declared (A) or (B) when the emergency was terminated. This will be the actual time of declaration by the Emergency Coordinator, which may be slightly different from the time the (EOF) was notified. The time may be obtained from the official log.

6. Reason for Emergency Declaration
Enter the Emergency Action Level (EAL) number (A) or (B) enter wording like that found in the EAL information in 0-EPIP-20101, Duties of the Emergency Coordinator. Wording should be brief yet descriptive enough for the off-site agencies to gain an understanding of the event. It should be clear from the incident description which EAL has necessitated the emergency declaration. Wording should be as non-technical as possible with no acronyms or abbreviations. This information should remain the same throughout update messages, unless there is a classification change.

** asterisk and instruction provided at the bottom of form - If Emergency Class escalation is necessary due to rapidly degrading conditions, Then provide the State and County authorities with the initial notification information by transmitting lines 1-6, at a minimum, on the State Notification Form (SNF) and terminate the call by stating that a new notification form will be provided within 15 minutes.

7. Additional Information or Update
Check **None** (A) or (B) Description and enter additional information, if necessary, or reason for update here. For example:

- Protective Action Recommendations (PARs) change
- An occurrence that would otherwise result in a lower emergency classification, on other unit
- Weather changes affecting public safety
- Radiation level changes
- Loss of off-site power, etc.

S.A.4 Key

ATTACHMENT 1B
(Page 3 of 7)

DIRECTIONS FOR COMPLETING THE
FLORIDA NUCLEAR PLANT EMERGENCY NOTIFICATION FORM

NOTE

*If the Class A Model (dose projection model) is being used, a **State Notification Form Summary Sheet** is available which provides information for Items 8-11, 13 and 14. The information is in a format similar to that found on the Florida Nuclear Plant Emergency Notification Form.(Tis is normally refered to as the "pink sheet"*

8. Weather Data

NOTE

*If available, **Primary** data should be used.*

Desired Data	Source of the Met Data	
	Primary	Backup
Wind Speed	10m Tower	60m Tower
Wind (from) Direction	10m Tower	60m Tower
Primary Stability Class Indicator (Delta-T)	60m Tower	//////////////////
Alternate Stability Class Indicator (Sigma-Theta)	//////////////////	10m Tower
Ambient Air Temperature	60m Tower	10m Tower/ Airport

A. Wind direction can be obtained from ERDADS.

B. If the wind direction is greater than 360° the wind direction is determined by subtracting 360° from the indicated number. Wind direction should be rounded to the nearest whole number.

C. Wind direction is always given as **wind from** (an easterly wind, or wind direction 90°, means that the wind is blowing from east to west).

D. When determining the sectors affected, the adjacent sectors on both sides of the actual downwind sector are included. Three sectors will typically be listed.

E. If the wind is located on the edge of a sector (i.e., 11°, 33°, etc.) an additional (fourth) sector should be added.

F. Enter the wind direction (wind from) in degrees in item A.

G. Enter the downwind sectors in item B.

S.A.4 Key

ATTACHMENT 1B
(Page 4 of 7)

DIRECTIONS FOR COMPLETING THE
FLORIDA NUCLEAR PLANT EMERGENCY NOTIFICATION FORM

Wind From	Sectors Affected	Wind From	Sectors Affected	Wind From	Sectors Affected
348-11	HJK	123-146	PQR	236-258	CDE
11-33	JKL	146-168	QRA	258-281	DEF
33-56	KLM	168-191	RAB	281-303	EFG
56-78	LMN	191-213	ABC	303-326	FGH
78-101	MNP	213-236	BCD	326-348	GHJ
101-123	NPQ	There is no O sector		There is no I sector	

9. Release Status

A. If there are no indications of a release of radioactive material, check box A and go to Item 11.

(1) Release

IF as a result of **accident conditions** ANY of the following is true:

- A rise of (approximately) 10 times or one decade above pre-transient values is seen on one of the following accident assessment monitors:
  - Plant Vent (RAD 6304 or R-14)
  - Spent Fuel Pool Vent (RAD 6418)
  - Steam Jet Air Ejector (RAD 6417 or R-15)
  - Dam-1 Main Steam (RAD 6426)
- Radiation Protection detects unplanned elevated airborne radiation levels outside of plant buildings due to accident conditions.
- A Steam Generator, with primary to secondary leakage due to a tube leak or rupture is vented to atmosphere and/or feeding the (operating) steam driven AFW pump.

THEN a RELEASE is in progress.

IF this determination is made in the Control Room, THEN the Release Significance category on the State Notification Form is "Under evaluation" until Dose Assessment is performed.

S.A.4 Key

ATTACHMENT 1B
(Page 5 of 7)

DIRECTIONS FOR COMPLETING THE
FLORIDA NUCLEAR PLANT EMERGENCY NOTIFICATION FORM

9. (Cont'd)

B. If a release of radioactive material, as defined in 9.A.1, is occurring, even though it may be less than normal operating limits, check Box **B**.

C. If a release has occurred but stopped, check Box **C** and go to Item 11.

Dose Assessment personnel in the TSC or EOF will have this information. The TSC Chemistry Supervisor, TSC RP Supervisor, or EOF RP Manager should be contacted for the data.

10. Release Significance Category
Do Not Check Any Box in Item 10 if you Checked Box 9 A No Release or if you checked Box 9C has occurred but stopped.

A. If a release is in progress and dose information is not available at the time of notification, check Box **A** and follow up as soon as information becomes available.

B. Check Box **B** if both noble gas and iodine release rates are within normal operating limits.

C. Check Box **C** if either noble gas or iodine release rates exceed the normal operating limits but forecasted 1 mile doses are less than 500 mrem TEDE and 1000 mrem Thyroid CDE. These doses are less than the state's Protective Action Guide (PAG) levels.

D. Check Box **D** if forecasted 1-mile doses are greater than or equal to either 500 mrem TEDE or 1000 mrem Thyroid CDE. These PAG levels require state and county action.

E. Check Box E if liquid release exceeds ODCM limits.

11. Utility Recommended Protective Actions

A. If there are no Protective Action Recommendations (PARs), check Box **A**.

B. If PARs are necessary, check Box **B**. Two formats are provided to record PARs. Use the **sector** format and determine appropriate PARs using the guidance in Attachment 3 to this procedure. Copy the PARs into Item 11 **B**. Indicate PARs by using only the words NONE, ALL, or ALL REMAINING or by listing the letters of the sectors affected. Protective Action Recommendations shall be approved by the Emergency Coordinator (EC) or the Recovery Manager (RM). The **zone** format is for Crystal River Unit 3 use only.

S. A.4 Key

ATTACHMENT 1B
(Page 6 of 7)

DIRECTIONS FOR COMPLETING THE
FLORIDA NUCLEAR PLANT EMERGENCY NOTIFICATION FORM

12. Plant Conditions

Answer the three questions Yes or No by checking the appropriate box. The RM Ops advisor may be consulted for assistance.

NOTE

Critical Safety function status is available from the Control Room.

A. Is the reactor shut down?
- If the subcriticality safety function is being met, **THEN** check the yes box.

B. Is the core adequately cooled?
- If the core cooling critical safety functions are being met, **THEN** check the yes box.

C. Is the containment intact?
- If the containment critical safety function is being met, **THEN** check the yes box.

D. Is the condition of the core stable or degrading?
- If "B" above is yes, **THEN** check the stable box,

OR

- If "B" above is NO, **THEN** check the degrading box.

13. Weather Data

A. Temperature, wind speed, wind direction and stability class can be obtained from ERDADS.

B. Enter wind speed in Miles Per Hour (MPH) in item A.

C. Stability Class - Enter the stability class as determined by ERDADS or by using the figure below. The figure shows the relationship between the Delta T and Sigma-Theta displayed by ERDADS and the stability class.

If using Delta-T, ΔT	If using Sigma-Theta, $\sigma\theta$	Stability Class
$\Delta T \leq -1.7$	$\sigma\theta \geq 22.5$	A
$-1.7 < \Delta T \leq -1.5$	$22.5 > \sigma\theta \geq 17.5$	B
$-1.5 < \Delta T \leq -1.4$	$17.5 > \sigma\theta \geq 12.5$	C
$-1.4 < \Delta T \leq -0.5$	$12.5 > \sigma\theta \geq 7.5$	D
$-0.5 < \Delta T \leq +1.4$	$7.5 > \sigma\theta \geq 3.8$	E
$+1.4 < \Delta T \leq +3.6$	$3.8 > \sigma\theta \geq 2.1$	F
$+3.6 < \Delta T$	$2.1 > \sigma\theta$	G

S.A.4 Key

ATTACHMENT 1B
(Page 7 of 7)

DIRECTIONS FOR COMPLETING THE FLORIDA NUCLEAR PLANT EMERGENCY NOTIFICATION FORM

14. Additional Release Information

This section requires that a release be in progress and completed results of dose assessment be available. Check A Not Applicable box if no release is occurring and/or if dose information is not available. Otherwise, provide all information that applies.

Projected Dose Information - Enter the projected Thyroid Dose (CDE) in mrem for 1 hour (EPIP-20126, Off-Site Dose Calculation, Line 5) and the projected Total Dose (TEDE) in mrem for 1 hour (EPIP-20126, Off-Site Dose Calculation, Line 16) for the site boundary 2, 5, and 10 miles **B** through **I**.

NOTE

The upper line of Step 15 is:

- *For the approval signature, date and time.*
- *Completed prior to contacting the State Watch Office.*
- *Not read over the phone.*

15. A. Obtain approval of the notification form and document on the upper line.

B. Message Received By

Upon completion of reading the form, enter:

- The name of the State Watch Office Duty Officer or the individual that receives the notification
- Date of the phone call
- Time at the State Watch Office (request it from the Duty Officer)

S. A. 4 Key

GUIDANCE FOR DETERMINING PROTECTIVE ACTION RECOMMENDATIONS (PARS)

BASED ON PLANT CONDITIONS

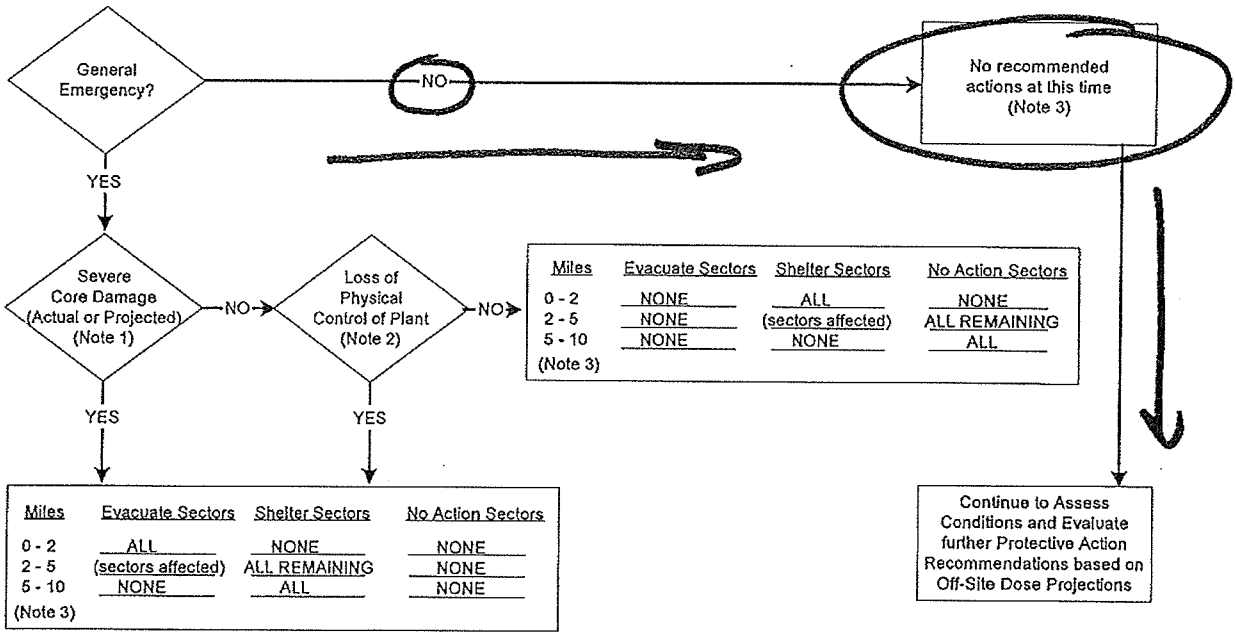

NOTES:

(1) Severe core damage is indicated by any of the following:
- Loss of critical functions required for core protection (i.e., loss of injection with LOCA)
- High Core temperatures (Valid CET > 700°F)
- CHRRM Reading of greater than or equal to 1.3E4 R/hr

(2) Loss of physical control of Control Room or reactor operating areas required for continued safe plant operation to intruders.

(3) See additional Guidance for Determining PARs in Emergency Plan Implementing Procedures.

JPM BRIEFING SHEET

The examiner will explain the initial conditions, which steps to simulate or discuss, and provide initiating cues. When you complete the task successfully, the objective for this job performance measure will be satisfied.

INITIAL CONDITIONS:

- Unit 3 was manually tripped based on 3-ONOP-071.2 Steam Generator Tube Leakage FOLDOUT PAGE criteria on 3A SG.
- Safety Injection and Containment Isolation Phase A were manually actuated based on 3-ONOP-071.2 Steam Generator Tube Leakage FOLDOUT PAGE criteria.
- Containment Pressure is 0 psig and stable
- 3-EOP-E-2, Faulted Steam Generator Isolation has been completed.
- 3A Steam Generator Pressure continues to decrease
- 3A Steam Generator WR level is 5% and increasing
- 3B and 3C SG pressures are 900 psig.
- 3B and 3C SG levels are 27%
- Wind speed is 10 mph
- Wind direction is from 120°

INITIATING CUE:

- You are the Emergency Coordinator in the Control Room. Given the initial conditions classify the event using 0-EPIP-20101, DUTIES OF EMERGENCY COORDINATOR including Protective Action Recommendations, if any.
- Raise your hand as soon as you have classified the event. At that time the examiner will provide you with a copy of the Florida State Notification Form. You will then complete the Florida State Notification Form using 0-EPIP- 20134, Offsite Notifications and Protective Action Recommendations.
- When you have completed the Florida State Notification Form, raise your hand to inform the Examiner you are done.
- There are elements of this task that are Time Critical.

Acknowledge to the examiner when you are ready to begin.

HAND THIS PAPER BACK TO YOUR EVALUATOR WHEN YOU HAVE SATISFACTORILY COMPLETED THE ASSIGNED TASK.