9.4 Air-Conditioning, Heating, Cooling, and Ventilation System

The air-conditioning, heating, cooling, and ventilation system is comprised of the following systems that serve the various buildings and structures of the plant:

- Nuclear island nonradioactive ventilation system (subsection 9.4.1)
- Annex/auxiliary buildings nonradioactive HVAC system (subsection 9.4.2)
- Radiologically controlled area ventilation system (subsection 9.4.3)
- Containment recirculation cooling system (subsection 9.4.6)
- Containment air filtration system (subsection 9.4.7)
- Radwaste building HVAC system (subsection 9.4.8)
- Turbine building ventilation system (subsection 9.4.9)
- Diesel generator building heating and ventilation system (subsection 9.4.10)
- Health physics and hot machine shop HVAC system (subsection 9.4.11)

9.4.1 Nuclear Island Nonradioactive Ventilation System

The nuclear island nonradioactive ventilation system (VBS) serves the main control room (MCR), control support area (CSA), Class 1E dc equipment rooms, Class 1E instrumentation and control (I&C) rooms, Class 1E electrical penetration rooms, Class 1E battery rooms, remote shutdown room, reactor coolant pump trip switchgear rooms, adjacent corridors, and the passive containment cooling system (PCS) valve room during normal plant operation.

The main control room emergency habitability system provides main control room habitability in the event of a design basis accident (DBA) and is described in Section 6.4.

9.4.1.1 Design Basis

9.4.1.1.1 Safety Design Basis

The nuclear island nonradioactive ventilation system provides the following nuclear safety-related design basis functions:

- Monitors the main control room supply air for radioactive particulate and iodine concentrations

- Isolates the HVAC penetrations in the main control room boundary on high-high particulate or iodine concentrations in the main control room supply air or on extended loss of ac power to support operation of the main control room emergency habitability system as described in Section 6.4

Those portions of the nuclear island nonradioactive ventilation system which penetrate the main control room envelope are safety-related and designed as seismic Category I to provide isolation of the main control room envelope from the surrounding areas and outside environment in the event of a design basis accident. Other functions of the system are nonsafety-related. HVAC equipment and ductwork whose failure could affect the operability of safety-related systems or components are designed to seismic Category II requirements. The remaining portion of the system is

nonsafety-related and nonseismic. The equipment is procured to meet the environmental qualifications used in standard building practice.

The nuclear island nonradioactive ventilation system is designed to control the radiological habitability in the main control room within the guidelines presented in Standard Review Plan (SRP) 6.4 and NUREG 0696 (Reference 1), if the system is operable and ac power is available.

Portions of the system that provide the defense-in-depth function of filtration of main control room/control support area air during conditions of abnormal airborne radioactivity are designed, constructed, and tested to conform with Generic Issue B-36, as described in Section 1.9 and Regulatory Guide 1.140 (Reference 30), as described in Appendix 1A, and the applicable portions of ASME AG-1 (Reference 36), ASME N509 (Reference 2), and ASME N510 (Reference 3).

Power to the ancillary fans to provide post-72-hour ventilation of the control room and I&C rooms is supplied from divisions B and C regulating transformers through two series fuses for isolation. The fuses protect the regulating transformers from failures of the non-1E fan circuits. When normal ventilation is available the ancillary fan circuits are disconnected from the supply with manual normally-open switches.

The nuclear island nonradioactive ventilation system is designed to provide a reliable source of heating, ventilation, and cooling to the areas served when ac power is available. The system equipment and component functional capabilities are to minimize the potential for actuation of the main control room emergency habitability system or the potential reliance on passive equipment cooling. This is achieved through the use of redundant equipment and components that are connected to standby onsite ac power sources.

9.4.1.1.2 Power Generation Design Basis

Main Control Room/Control Support Area (CSA) Areas

The nuclear island nonradioactive ventilation system provides the following specific functions:

- Controls the main control room and control support area relative humidity between 25 to 60 percent
- Maintains the main control room and CSA areas at a slightly positive pressure with respect to the adjacent rooms and outside environment during normal operations to prevent infiltration of unmonitored air into the main control room and CSA areas
- Isolates the main control room and/or CSA area from the normal outdoor air intake and provides filtered outdoor air to pressurize the main control room and CSA areas to a positive pressure of at least 1/8 inch wg when a high gaseous radioactivity concentration is detected in the main control room supply air duct
- Isolates the main control room and/or CSA area from the normal outdoor air intake and provides 100 percent recirculation air to the main control room and CSA areas when a high concentration of smoke is detected in the outside air intake

- Provides smoke removal capability for the main control room and control support area
- Maintains the main control room emergency habitability system passive cooling heat sink below its initial design ambient air temperature limit of 75°F
- Maintains the main control room/control support area carbon dioxide levels below 0.5 percent concentration and the air quality within the guidelines of Table 1 and Appendix C, Table C-1 of Reference 32.

The background noise level in the main control room does not exceed 65 dB(A) when the VBS is operating.

The system maintains the following room temperatures based on the maximum and minimum outside air safety temperature conditions shown in Chapter 2, Table 2-1:

Area	Temperature (°F)
Main control room	67 – 75
Control support area	67 – 78

Class 1E Electrical Rooms/Remote Shutdown Room

The nuclear island nonradioactive ventilation system provides the following specific functions:

- Exhausts air from the Class 1E battery rooms to limit the concentration of hydrogen gas to less than 2 percent by volume in accordance with Regulatory Guide 1.128 (Reference 31).
- Maintains the Class 1E electrical room emergency passive cooling heat sink below its initial design ambient air temperature limit of 75°F
- Provides smoke removal capability for the Class 1E electrical equipment rooms and battery rooms

The background noise level in the remote shutdown room does not exceed 65 dB(A) when the VBS is operating.

The system maintains the following room temperatures based on the maximum and minimum outside air safety temperature conditions shown in Chapter 2, Table 2-1:

Area	Temperature (°F)
Class 1E battery rooms	67 - 73
Class 1E dc equipment rooms	67 - 73
Class 1E electrical penetration rooms	67 - 73
Class 1E instrumentation and control rooms	67 - 73
Corridors	67 - 73
Remote shutdown room	67 - 73
Reactor coolant pump trip switchgear rooms	67 - 73
HVAC equipment rooms	50 - 85

Passive Containment Cooling System Valve Room

The subsystem maintains the following room temperatures based on the maximum and minimum outside air safety temperature conditions shown in Chapter 2, Table 2-1:

Area	Temperature (°F)
Passive containment cooling system valve room	50 - 120

Post-72-Hour Design Basis

Main Control Room

The specific function of the nuclear island nonradioactive ventilation system is to maintain the control room below a temperature approximately 4.5°F above the average outdoor air temperature.

Divisions B and C Instrumentation and Control Rooms Design Basis

The specific function of the nuclear island nonradioactive ventilation system is to maintain the I&C rooms below the qualification temperature of the I&C equipment.

9.4.1.2 System Description

The nuclear island nonradioactive ventilation system is shown in Figure 9.4.1-1. The system consists of the following independent subsystems:

- Main control room/control support area HVAC subsystem
- Class 1E electrical room HVAC subsystem
- Passive containment cooling system valve room heating and ventilation subsystem

9.4.1.2.1 General Description

9.4.1.2.1.1 Main Control Room/Control Support Area HVAC Subsystem

The main control room/control support area HVAC subsystem serves the main control room and control support area with two 100 percent capacity supply air handling units, return/exhaust air fans, supplemental air filtration units, associated dampers, instrumentation and controls, and common ductwork. The supply air handling units and return/exhaust air fans are connected to common ductwork which distributes air to the main control room and CSA areas. The main control room envelope consists of the main control room, shift manager's office, operation work area, toilet, and operations break room area. The CSA area consists of the main control support area operations area, conference rooms, NRC room, computer rooms, shift turnover room, kitchen/rest area, and restrooms. The main control room and control support area toilets have separate exhaust fans.

Outside supply air is provided to the plant areas served by the main control room/control support area HVAC subsystem through an outside air intake duct that is protected by an intake enclosure located on the roof of the auxiliary building at elevation 153′-0″. The outside air intake duct is located more than 50 feet below and more than 100 feet laterally away from the plant vent discharge. The supply, return, and toilet exhaust are the only HVAC penetrations in the main control room envelope and include redundant safety-related seismic Category I isolation valves that are physically located within the main control room envelope. Redundant safety-related radiation monitor sample line connections are located upstream of the VBS supply air isolation valves. These monitors initiate operation of the nonsafety-related supplemental air filtration units on high gaseous radioactivity concentrations and isolate the main control room from the nuclear island nonradioactive ventilation system on high-high particulate or iodine radioactivity concentrations. See Section 11.5 for a description of the main control room supply air radiation monitors.

Both redundant trains of supplemental air filtration units and one train of the supply air handling unit are located in the main control room mechanical equipment room at elevation 135′-3″ in the auxiliary building. The other supply air handling unit subsystem is located in the main control room mechanical equipment room at elevation 135′-3″ in the annex building. The main control room toilet exhaust fan is located at elevation 135′-3″ in the auxiliary building. A humidifier is provided for each supply air handling unit. The supply air handling unit cooling coils are provided with chilled water from air-cooled chillers in the central chilled water system. See subsection 9.2.7 for the chilled water system description.

The main control room/control support area HVAC subsystem is designed so that smoke, hot gases, and fire suppressant will not migrate from one fire area to another to the extent that they could adversely affect safe shutdown capabilities, including operator actions. Fire or combination fire and smoke dampers are provided to isolate each fire area from adjacent fire areas during and following a fire in accordance with NFPA 90A (Reference 27) requirements. These combination smoke/fire dampers close in response to smoke detector signals or in response to the heat from a fire. See Appendix 9A for identification of fire areas.

9.4.1.2.1.2 Class 1E Electrical Room HVAC Subsystem

The Class 1E electrical room HVAC subsystem serves the Class 1E electrical rooms, Class 1E instrumentation and control (I&C) rooms, Class 1E electrical penetration rooms, Class 1E battery rooms, spare Class 1E battery room, remote shutdown room, and reactor coolant pump trip switchgear rooms. The A and C electrical divisions, spare battery room, and reactor coolant pump trip switchgear rooms are served by one ventilation subsystem; the B and D electrical divisions and remote shutdown room are served by a second ventilation subsystem.

Each subsystem consists of two 100 percent capacity supply air handling units, return/exhaust air fans, associated dampers, controls and instrumentation, and common ductwork. The supply air handling units and return/exhaust air fans are connected to a common ductwork which distributes air to the Class 1E electrical rooms. The outside supply air intake enclosure for the A and C subsystem is common to the main control room/control support area intake located on the roof of the auxiliary building at elevation 153′-0″. The outside supply air intake for the B and D subsystem is located separate from the main control room/control support area air intake enclosure on the auxiliary building roof at elevation 153′-0″. The exhaust ducts from the battery rooms are connected to the turbine building vent to remove hydrogen gas generated by the batteries.

The HVAC equipment which serves the A and C electrical divisions is located in the nuclear island nonradioactive ventilation system main control room/A and C equipment room at elevation 135′-3″ in the auxiliary building. The HVAC equipment which serves the B and D division of Class 1E electrical equipment is located in the upper and lower nuclear island nonradioactive ventilation system B and D equipment rooms at elevation 117′-0″ and at elevation 135′-3″.

The supply air handling unit cooling coils are provided with chilled water from the air-cooled chillers in the central chilled water system. The two air handling units for each set of electrical divisions are provided with chilled water from redundant air-cooled chillers. Refer to subsection 9.2.7 for the chilled water system description.

Each subsystem for the Class 1E battery rooms is provided with two 100 percent capacity exhaust fans.

The Class 1E electrical room HVAC subsystem is designed so that smoke, hot gases, and fire suppressant does not migrate from one fire area to another to the extent that they could adversely affect safe shutdown capabilities, including operator actions. Separate ventilation subsystems are provided to serve the electrical division A and C equipment rooms and the electrical division B and D equipment rooms. The use of separate HVAC distribution subsystems for the redundant trains of electrical equipment prevents smoke and hot gases from migrating from one distribution division to the other through the ventilation system ducts. In addition, combination fire-smoke dampers are provided for Class 1E equipment rooms, including the remote shutdown room, to isolate each fire area and block the migration of smoke and hot gases to or from adjacent fire areas in accordance with NFPA 90A requirements. These combination fire/smoke dampers close in response to smoke detector signals or in response to the heat from a fire. During a fire, the pressure difference across the doors in the stairwells S01 and S02 is maintained in accordance

with the guidance of NFPA 92A (Reference 33) by dedicated stairwell pressurization fans. See Appendix 9A for identification of fire areas.

9.4.1.2.1.3 Passive Containment Cooling System Valve Room Heating and Ventilation Subsystem

The passive containment cooling system valve room heating and ventilation subsystem serves the passive containment cooling system valve room.

The subsystem consists of one 100 percent ventilating fan, two 100 percent capacity electric unit heaters, associated dampers, controls and instrumentation. The passive containment cooling system valve room heating and ventilation subsystem equipment is located in the passive containment cooling system valve room in the containment dome area at elevation 286′-6″.

The exhaust fan draws outside air through an intake louver damper and directly exhausts to the environment.

9.4.1.2.2 Component Description

The nuclear island nonradioactive ventilation system is comprised of the following major components. These components are located in buildings on the Seismic Category I Nuclear Island and the Seismic Category II portion of the annex building. The seismic design classification, safety classification and principal construction code for Class A, B, C, or D components are listed in Section 3.2. Tables 9.4.1-1, 9.4.1-2 and 9.4.1-3 provide design parameters for major components in each subsystem.

Supply Air Handling Units

Each air handling unit consists of a mixing box section, a low efficiency filter bank, high efficiency filter bank, an electric heating coil, a chilled water cooling coil bank, and supply and return/exhaust air fans.

Supply and Return/Exhaust Air Fans

The supply and return/exhaust air fans are centrifugal type, single width single inlet (SWSI) or double width double inlet (DWDI), with high efficiency wheels and backward inclined blades to produce non-overloading horsepower characteristics. The fans are designed and rated in accordance with ANSI/AMCA 210 (Reference 4), ANSI/AMCA 211 (Reference 5) and ANSI/AMCA 300 (Reference 6).

Ancillary Fans

The ancillary fans are centrifugal type with non-overloading horsepower characteristics. Each can provide a minimum of 1,530 cfm. The fans are designed and rated in accordance with ANSI/AMCA 210 (Reference 4), ANSI/AMCA 211 (Reference 5), and ANSI/AMCA 300 (Reference 6).

Supplemental Air Filtration Units

Each supplemental air filtration unit includes a high efficiency filter bank, an electric heating coil, a charcoal adsorber with upstream HEPA filter bank, a downstream postfilter bank and a fan. The filtration unit configurations, including housing, internal components, ductwork, dampers, fans and controls, and the location of the fans on the unfiltered side of units are designed, constructed, and tested to meet the applicable performance requirements of ASME AG-1, ASME N509, and ASME N510 (References 36, 2, and 3) to satisfy the guidelines of Regulatory Guide 1.140 (Reference 30).

Low Efficiency Filters, High Efficiency Filters, and Postfilters

The low efficiency filters and high efficiency filters have a rated dust spot efficiency based on ASHRAE 52 and 126 (References 7 and 35). Filter minimum average dust spot efficiency is shown in Table 9.4.1-1 and 9.4.1-2. High efficiency filter performance upstream of HEPA filter banks meet the design requirements of ASME AG-1 (Reference 36), Section FB. Postfilters downstream of the charcoal filters have a minimum DOP efficiency of 95 percent. The filters meet UL 900 (Reference 8) Class I construction criteria.

HEPA Filters

HEPA filters are constructed, qualified, and tested in accordance with UL-586 (Reference 9) and ASME AG-1 (Reference 36), Section FC. Each HEPA filter cell is individually shop tested to verify an efficiency of at least 99.97 percent using a monodisperse 0.3-μm aerosol in accordance with ASME AG-1 (Reference 36), Section TA.

Charcoal Adsorbers

Each charcoal adsorber is designed, constructed, qualified, and tested in accordance with ASME AG-1 (Reference 36), Section FE; and Regulatory Guide 1.40. Each charcoal adsorber is a single assembly with welded construction and 4-inch deep Type III rechargeable adsorber cell, conforming with IE Bulletin 80-03 (Reference 29).

Electric Heating Coils

The electric heating coils are multi-stage fin tubular type. The electric heating coils meet the requirements of UL-1995 (Reference 10). Electric heating coils used in battery rooms meet the requirements of UL 823 (Reference 39) for Class 1 Division I, Group B hazardous locations. The coils for the supplemental air filtration subsystem are constructed, qualified, and tested in accordance with ASME AG-1 (Reference 36), Section CA.

Electric Convection Heaters

The electric convection heaters are of the single-stage or two-stage fin tubular type. The electric unit heaters are UL-listed and meet the requirements of UL-1996 (Reference 26) and the National Electric Code NFPA 70 (Reference 28). Convection heaters meet the requirements of UL 1278 (Reference 40) or UL 1042 (Reference 41). Convection heaters are controlled by an integral temperature sensor or by a temperature sensor located in the space served by the heater.

Electric Unit Heaters

The electric unit heaters are single-stage or two-stage fin tubular type. The electric unit heaters are UL-listed and meet the requirements of UL-1996 (Reference 26) and the National Electrical Code NFPA 70 (Reference 28).

Cooling Coils

The chilled water cooling coils are counterflow, finned tubular type. The cooling coils are designed and rated in accordance with ASHRAE 33 (Reference 11) and ANSI/ARI 410 (Reference 12).

Humidifiers

The humidifiers are packaged electric steam generator type which converts water to steam and distributes it through the air handling system. The humidifiers are designed and rated in accordance with ARI 640 (Reference 13).

Isolation Dampers and Valves

Nonsafety-related isolation dampers are bubble tight, single- or parallel-blade type. The isolation dampers have spring return actuators which fail closed on loss of electrical power. The isolation dampers are constructed, qualified, and tested in accordance with ANSI/AMCA 500 (Reference 14) or ASME AG-1 (Reference 36), Section DA.

The main control room pressure boundary penetrations include isolation valves, interconnecting piping, and vent and test connection with manual test valves. The isolation valves are classified as Safety Class C (see subsection 3.2.2.5 and Table 3.2-3) and seismic Category I. Their boundary isolation function will be tested in accordance with ASME N510 (Reference 3).

The main control room pressure boundary isolation valves have motor operators. The valves are designed to fail as is in the event of loss of electrical power. The valves are qualified to shut tight against control room pressure.

Tornado Protection Dampers

The tornado protection dampers are split-wing type and designed to close automatically. The tornado protection dampers are designed against the effect of 300 mph wind.

Shutoff, Balancing and Backdraft Dampers

Multiblade, two-position remotely operated shutoff dampers are parallel-blade type. Multiblade, balancing dampers are opposed-blade type. Backdraft dampers are of the counterbalanced type and are provided to delay smoke migration through ductwork in case of fire. The backdraft dampers meet the Leakage Class II requirements of ASME N509 (Reference 2). Air handling unit and fan shutoff dampers are designed for maximum fan static pressure at shutoff flow and meet the performance requirements in accordance with ANSI/AMCA 500 (Reference 14). The

supplemental air filtration subsystem dampers are constructed, qualified, and tested in accordance with ANSI/AMCA 500 or ASME AG-1 (Reference 36), Section DA.

Combination Fire/Smoke Dampers

Combination fire/smoke dampers are provided at duct penetrations through fire barriers to maintain the fire resistance ratings of the barriers. The combination fire/smoke dampers meet the design, leakage testing, and installation requirements of UL-555S (Reference 25).

Ductwork and Accessories

Ductwork, duct supports, and accessories are constructed of galvanized steel. Ductwork subject to fan shutoff pressures is structurally designed to accommodate fan shutoff pressures. Ductwork, supports, and accessories meet the design and construction requirements of SMACNA Industrial Rectangular and Round Duct Construction Standards (References 16 and 34) and SMACNA HVAC Duct Construction Standards – Metal and Flexible (Reference 17). The supplemental air filtration and main control room/control support area HVAC subsystem's ductwork, including the air filtration units and the portion of the ductwork located outside of the main control room envelope, that maintains integrity of the main control room/control support area pressure boundary during conditions of abnormal airborne radioactivity are designed in accordance with ASME AG-1 (Reference 36), Article SA-4500, to provide low leakage components necessary to maintain main control room/control support area habitability.

9.4.1.2.3 System Operation

9.4.1.2.3.1 Main Control Room/Control Support Area HVAC Subsystem

Normal Plant Operation

During normal plant operation, one of the two 100 percent capacity supply air handling units and return/exhaust air fans operates continuously. Outside makeup air supply to the supply air handling units is provided through an outside air intake duct. The outside airflow rate is automatically controlled to maintain the main control room and CSA areas at a slightly positive pressure with respect to the surrounding areas and the outside environment.

The main control room/control support area supply air handling units are sized to provide cooling air for personnel comfort, equipment cooling, and to maintain the main control room emergency habitability passive heat sink below its initial ambient air design temperature. The temperature of the air supplied by each air handling unit is controlled by temperature sensors located in the main control room return air duct and in the computer room B return air duct to maintain the ambient air design temperature within its normal design temperature range by modulating the electric heat or chilled water cooling. Some spaces have convection heaters for temperature control.

The outside air is continuously monitored by smoke monitors located at the outside air intake plenum and the return air is monitored for smoke upstream of the supply air handling units. The supply air to the main control room is continuously monitored for airborne radioactivity while the supplemental air filtration units remain in a standby operating mode.

The standby supply air handling unit and corresponding return/exhaust fans are started automatically if one of the following conditions shuts down the operating unit:

- Airflow rate of the operating fan is above or below predetermined setpoints.
- Return air temperature is above or below predetermined setpoints.
- Differential pressure between the main control room and the surrounding areas and outside environment is above or below predetermined setpoints.
- Loss of electrical and/or control power to the operating unit.

Abnormal Plant Operation

Control actions are taken at two levels of radioactivity as detected in the main control room supply air duct. The first is "high" radioactivity based upon gaseous radioactivity instrumentation. The second is "high-high" radioactivity based upon either particulate or iodine radioactivity instruments.

If "high" gaseous radioactivity is detected in the main control room supply air duct and the main control room/control support area HVAC subsystem is operable, both supplemental air filtration units automatically start to pressurize the main control room and CSA areas to at least 1/8 inch wg with respect to the surrounding areas and the outside environment using filtered makeup air. The normal outside air makeup duct and the main control room and control support area toilet exhaust duct isolation dampers close. The smoke/purge exhaust isolation dampers close, if open. The main control room/control support area supply air handling unit continues to provide cooling with recirculation air to maintain the main control room passive heat sink below its initial ambient air design temperature and maintains the main control room and CSA areas within their design temperatures. The supplemental air filtration subsystem pressurizes the combined volume of the main control room and control support area concurrently with filtered outside air. A portion of the recirculation air from the main control room and control support area is also filtered for cleanup of airborne radioactivity. The main control room/control support area HVAC equipment and ductwork that form an extension of the main control room/control support area pressure boundary limit the overall infiltration (negative operating pressure) and exfiltration (positive operating pressure) rates to those values shown in Table 9.4.1-1. Based on these values, the system is designed to maintain personnel doses within allowable General Design Criteria (GDC) 19 limits during design basis accidents in both the main control room and the control support area.

If ac power is unavailable for more than 10 minutes or if "high-high" particulate or iodine radioactivity is detected in the main control room supply air duct, which would lead to exceeding GDC 19 operator dose limits, the protection and safety monitoring system automatically isolates the main control room from the normal main control room/control support area HVAC subsystem by closing the supply, return, and toilet exhaust isolation valves. Main control room habitability is maintained by the main control room emergency habitability system, which is discussed in Section 6.4.

The main control room and CSA areas ventilation supply and return/exhaust ducts can be remotely or manually isolated from the main control room.

If a high concentration of smoke is detected in the outside air intake, an alarm is initiated in the main control room and the main control room/control support area HVAC subsystem is manually realigned to the recirculation mode by closing the outside air and toilet exhaust duct isolation valves. The main control room and control support area toilet exhaust fans are tripped upon closure of the isolation valves. The main control room/CSA areas are not pressurized when operating in the recirculation mode. The main control room/control support area HVAC supply air subsystem continues to provide cooling, ventilation, and temperature control to maintain the emergency habitability passive heat sink below its initial ambient air design temperature and maintains the main control room and CSA areas within their design temperatures.

In the event of a fire in the main control room or control support area, in response to heat from the fire or upon receipt of a smoke signal from an area smoke detector, the combination fire/smoke dampers close automatically to isolate the fire area. The subsystem continues to provide ventilation/cooling to the unaffected area and maintains the unaffected areas at a slightly positive pressure. The main control room/control support area HVAC subsystem can be manually realigned to the once-through ventilation mode to supply 100 percent outside air to the unaffected area. Realignment to the once-through ventilation mode minimizes the potential for migration of smoke or hot gas from the fire area to the unaffected area. Smoke and hot gases can be removed from the affected area by reopening the closed combination fire/smoke damper(s) from outside of the affected fire area during the once-through ventilation mode. In the once-through ventilation mode, the outside air intake damper to the air handling unit mixing plenum opens and the return air damper to the air handling unit closes to provide 100 percent outside air to the supply air handling unit. In this mode, the subsystem exhaust air isolation damper opens to exhaust the return air directly to the turbine building vent.

Power is supplied to the main control room/control support area HVAC subsystem by the plant ac electrical system. In the event of a loss of the plant ac electrical system, the main control room/control support area ventilation subsystem can be transferred to the onsite standby diesel generators. The convection heaters and duct heaters are not transferred to the onsite standby diesel generator.

When complete ac power is lost and the outside air is acceptable radiologically and chemically, MCR habitability is maintained by operating one of the two MCR ancillary fans to supply outside air to the MCR. It is expected that outside air will be acceptable within 72 hours following a radiological release. See subsection 6.4.2.2 for details. The outside air pathway to the ancillary fans is provided through the nonradioactive ventilation system air intake opening located on the roof, the mechanical room at floor elevation 135′-3″, and nonradioactive ventilation system supply duct. Warm air from the MCR is vented to the annex building through stairway S05, into the remote shutdown room and the clean access corridor at elevation 100′-0″. The ancillary fan capacity and air flow rate maintain the MCR environment near the daily average outdoor air temperature. The ancillary fans and flow path are located within the auxiliary building which is a Seismic Category I structure.

Power supply to the ancillary fans is from the respective division B or C regulating transformers which receive power from the ancillary diesel generators. For post-72-hour power supply discussion see subsection 8.3.1.1.1.

9.4.1.2.3.2 Class 1E Electrical Room HVAC Subsystem

The Class 1E electrical room HVAC equipment that serves electrical division A and C equipment is described in this section. The operation of the Class 1E electrical room HVAC equipment that serves electrical division B and D is similar.

Normal Plant Operation

During normal plant operation, one of the redundant supply air handling units, return fans, and battery room exhaust fans operate continuously to provide room temperature control, to maintain the Class 1E electrical room emergency passive heat sink below its initial ambient air temperature, and to purge and prevent build-up of hydrogen gas concentration in the Class 1E Battery Rooms. The temperature of the air supplied by each air handling unit is controlled by temperature sensors located in the return air duct to maintain the room air temperature within the normal design range by modulating electric heating or chilled water cooling. Duct heaters are controlled by temperature sensors located in the space served by the heater.

During normal plant operation, the exhaust airflow from the Class 1E battery rooms is vented directly to the turbine building vent to limit the concentration of hydrogen gas in the rooms to less than 2 percent by volume in accordance with the guidelines of Regulatory Guide 1.128.

The outside makeup air to the supply air handling units is provided through an outside air intake duct. The outside airflow rate is manually balanced during system startup to provide adequate makeup air for the battery room exhaust fans.

The standby supply air handling unit and the corresponding return/exhaust fans are started automatically if one of the following conditions occurs:

- Airflow rate of the operating fan is above or below predetermined set points
- Return air temperature is above or below predetermined setpoints.
- Loss of electrical and/or control power to the operating unit.

Abnormal Plant Operation

The operation of the Class 1E electrical room HVAC subsystem is not affected by the detection of airborne radioactivity in the main control room supply air duct of the main control room/control support area HVAC subsystem. During a design basis accident (DBA), if the plant ac electrical system is unavailable, the Class 1E electrical room passive heat sink provides area temperature control. Refer to Section 6.4 for further details.

If a high concentration of smoke is detected in the outside air intake and an alarm is initiated in the main control room, the Class 1E electrical HVAC subsystem(s) can be manually aligned to the recirculation mode by closing the outside air intake damper to the air handling unit mixing plenum. This allows 100 percent room air to return to the supply air subsystem air handling unit.

The subsystem continues to provide cooling, ventilation, and temperature control to maintain the areas served by the subsystem(s) within their design temperatures and pressures.

In the event of a fire in a Class 1E electrical room, in response to heat from the fire or upon receipt of a smoke signal from an area smoke detector, the combination fire/smoke dampers close automatically to isolate the fire area. The affected subsystem continues to provide ventilation/cooling to the remaining areas and maintains the remaining areas at a slightly positive pressure. Either or both subsystems can be manually realigned to the once-through ventilation mode to supply 100 percent outside air to the unaffected areas. Realignment to the once-through ventilation mode minimizes the potential for migration of smoke and hot gases from a non-Class 1E electrical room or a Class 1E electrical room of one division into the Class 1E electrical room of another division. Smoke and hot gases can be removed from the affected areas by reopening the closed combination fire/smoke dampers from outside of the affected fire area during the once-through ventilation mode. In the once-through ventilation mode, the outside air intake damper to the air handling unit mixing plenum opens and the return air damper to the air handling unit closes to allow 100 percent outside air to the supply air handling unit. The subsystem exhaust air isolation damper also opens to exhaust room air directly to the turbine building vent. During a fire, the pressure difference across the doors in stairwells S01 and S02 is maintained in accordance with the guidance of NFPA 92A (Reference 33) by dedicated stairwell pressurization fans.

The power supplies to the Class 1E electrical room HVAC subsystem are provided by the plant ac electrical system and the onsite standby diesel generators. In the event of a loss of the plant ac electrical system, the Class 1E electrical room HVAC subsystem is automatically transferred to the onsite standby diesel generators. The convection heaters and duct heaters are not transferred to the onsite standby diesel generator.

When complete ac power is lost, division B and C instrumentation and control room temperature is maintained by operating their respective ancillary fans (VBS-MA-11 and VBS-MA-12) to supply outside air to the I&C rooms. It is expected that outside air will be supplied within 72 hours following a radiological release. The outside air pathway to the ancillary fans is through the nonradioactive ventilation system outside air intake opening located on the roof, the mechanical room at floor elevation 135′-3″, stairway No. 1 doors at elevation 135′-3″ and 82′-6″, the access corridor at floor elevation 82′-6″, and the divisional battery rooms. The warm air is vented to the annex building through the clean access corridor at elevation 100′-0″. The outside air supply provides cooling and maintains room temperature below the qualification temperature of the I&C equipment. The ancillary fans and flow path are located within the auxiliary building which is a Seismic Category I structure.

Power supply to the ancillary fans is from the respective division B or C regulating transformers which receive power from the ancillary diesel generators. For post-72-hours power supply discussion see subsection 8.3.1.1.1.

9.4.1.2.3.3 Passive Containment Cooling System Valve Room Heating and Ventilation Subsystem

Normal Plant Operation

The passive containment cooling system valve room ventilation fan exhausts room air to the outside environment to maintain room temperature within its normal design temperature range.

When heating is required, one of the two redundant electric unit heaters provides heating to maintain the passive containment cooling system valve room temperature above its minimum design temperature. The lead electric unit heater starts or stops when the room air temperature is above or below predetermined setpoints. The standby electric unit heater starts automatically if the room air temperature drops below a predetermined setpoint.

Abnormal Plant Operation

The power supplies to the passive containment cooling system valve room unit heaters are provided by the plant ac electrical system and the onsite standby diesel generators. In the event of a loss of the plant ac electrical system, the passive containment cooling system valve room unit heaters can be transferred to the onsite standby diesel generators by the operator.

The power supply to the passive containment cooling system valve room ventilation fan is provided by the plant ac electrical system. The room temperature is not expected to exceed 120°F, based on maximum ambient conditions and internal heat sources.

Following a fire in the passive containment cooling system valve room, smoke and hot gases can be removed from the area using portable exhaust fans and flexible ductwork.

9.4.1.3 Safety Evaluation

The nuclear island nonradioactive ventilation system has no safety-related function other than main control room envelope isolation and main control room supply air radioactivity monitoring, and therefore requires no nuclear safety evaluation. Redundant safety-related isolation valves are provided in the supply, return, and exhaust ducts penetrating the main control room. Therefore, there are no single active failures which would prevent isolation of the main control room envelope. The safety-related redundant main control room supply air radiation monitors are provided. The nuclear island nonradioactive ventilation system is designed so that safety-related systems, structures, or components are not damaged as a result of a seismic event.

9.4.1.4 Tests and Inspection

The nuclear island nonradioactive ventilation system is designed to permit periodic inspection of system components. Each component is inspected prior to installation. Components of each system are accessible for periodic inspection during normal plant operation. A system air balance test and adjustment to design conditions is conducted in the course of the plant preoperational test program. Airflow rates are measured and balanced within a tolerance of ±10 percent of design flow rate in accordance with the guidelines of SMACNA HVAC systems, Testing, Adjusting and Balancing (Reference 19) except the supplemental air filtration units which are balanced in accordance with the guidelines of ASME N510 (Reference 3). Instruments are calibrated during

testing. Automatic controls are tested for actuation at the proper setpoints. Alarm functions are checked for operability. Air quality within the MCR/CSA environment is confirmed to be within the guidelines of Table 1 and Appendix C, Table C-1, of Reference 32 by analyzing air samples taken during preoperational testing.

The supplemental air filtration unit, HEPA filters, and charcoal adsorbers are tested in place in accordance with ASME N510 to verify that these components do not exceed a maximum allowable bypass leakage rate. Samples of charcoal adsorbent, used or new, are periodically tested to verify a minimum charcoal efficiency of 90 percent in accordance with Regulatory Guide 1.140 (Reference 30), except that test procedures and test frequency are conducted in accordance with ASME N510.

The ductwork for the supplemental air filtration subsystem and portions of the main control room/control support area HVAC subsystem that maintain the integrity of the main control room/control support area pressure boundary during conditions of abnormal airborne radioactivity are tested for leak tightness in accordance with ASME N510, Section 6. Testing for main control room/control support area inleakage during Main Control Room/Control Support Area HVAC Subsystem operation will be conducted in accordance with ASTM E741 (Reference 38). The remaining supply and return/exhaust ductwork is tested in place for leakage in accordance with SMACNA HVAC Duct Leakage Test Manual (Reference 18).

9.4.1.5 Instrumentation Applications

The nuclear island nonradioactive ventilation system is controlled by the plant control system except for the main control room isolation valves, which are controlled by the protection and safety monitoring system. Refer to subsection 7.1.1 for a description of the plant control and plant safety and monitoring systems. The instruments discussed below satisfy Table 4.2 of ASME N509 (Reference 2).

Temperature controllers are provided in the return air ducts to control the room air temperatures within the predetermined ranges. Temperature indication and alarms for the main control room return air, Class 1E electrical room return air, air handling unit supply air, supplemental filtration unit prefilter inlet air and charcoal adsorbers are provided to inform plant operators of abnormal temperature conditions.

Pressure differential indication and alarms are provided across each filter bank (except charcoal filters) to inform plant operators when filter changeout is necessary. Pressure differential indication and alarms are provided to control the main control room and monitor the control support area ambient room pressure differentials with respect to surrounding areas.

Radioactivity indication and alarms are provided to inform the main control room operators of gaseous, particulate, and iodine radioactivity concentrations in the main control room supply air duct. See Section 11.5 for a description of the main control room supply air duct radiation monitors and their actuation functions.

Smoke monitors are provided to detect smoke in the outside air intake duct to the main control room and the main control room and Class 1E electrical room return air ducts.

Airflow indication and alarms are provided to monitor operation of the supply and exhaust fans.

Relative humidity indication and alarms are provided to monitor the average relative humidity in the return air from the main control room/CSA areas and the inlet air to the supplemental air filtration unit charcoal filters.

Status indication is provided to monitor fans, heaters and controlled dampers.

9.4.2 Annex/Auxiliary Buildings Nonradioactive HVAC System

The annex/auxiliary buildings nonradioactive HVAC system serves the nonradioactive personnel and equipment areas, electrical equipment rooms, clean corridors, the ancillary diesel generator room and demineralized water deoxygenating room in the annex building, and the main steam isolation valve compartments, reactor trip switchgear rooms, and piping and electrical penetration areas in the auxiliary building.

9.4.2.1 Design Basis

9.4.2.1.1 Safety Design Basis

The annex/auxiliary buildings nonradioactive HVAC system serves no safety-related function and therefore has no nuclear safety design basis. System equipment and ductwork located in the nuclear island whose failure could affect the operability of safety-related systems or components are designed to seismic Category II requirements. The remaining portion of the system is nonseismic.

9.4.2.1.2 Power Generation Design Basis

The annex/auxiliary buildings nonradioactive HVAC system provides the following specific functions:

- Provides conditioned air to maintain acceptable temperatures for equipment and personnel working in the area
- Provides suitable environmental conditions for equipment in the main steam isolation valve (MSIV) compartments
- Prevents the buildup of hydrogen in non-Class 1E battery rooms to less than 2 percent hydrogen by volume
- Removes vitiated air from locker, toilet, shower facilities, and rest rooms

The system maintains the following room temperatures based on maximum and minimum normal outdoor air temperature conditions shown in Chapter 2, Table 2-1:

Room or Area	Temperatures (°F)
Normal Operation	
Offices, office areas, conference rooms, corridors (annex building)	73-78
Locker rooms, toilet rooms (annex building)	73-78
Security rooms and areas (annex building)	73-78
Non-Class 1E battery rooms (annex building)	60-90
Switchgear and battery charger rooms (annex building)	50-105
HVAC and mechanical equipment rooms (annex building)	50-105
Security room in mechanical equipment room (annex building)	73-78
MSIV compartments (auxiliary building)	50-105
Non-safety electrical penetration rooms (auxiliary building)	50-105
Reactor trip SWGR rooms (auxiliary building)	50-105
Valve/piping penetration room (auxiliary building)	50-105
Ancillary diesel generator room (annex building)	50-105
Demineralized water deoxygenating room	50-105
Elevator machine room	50-105
Boric acid batching room	50-105
Upset Conditions (Loss of Plant ac Electrical System)	
Switchgear rooms (annex building)	122 (maximum)
Battery charger rooms (annex building)	122 (maximum)
Ancillary diesel generator room (annex building - DG sets operating)	122 (maximum)

9.4.2.2 System Description

The annex/auxiliary buildings nonradioactive HVAC system consists of the following independent subsystems:

- General area HVAC subsystem
- Switchgear room HVAC subsystem
- Equipment room HVAC subsystem
- MSIV compartment HVAC subsystem
- Mechanical equipment areas HVAC subsystem
- Valve/Piping penetration room HVAC subsystem

The defense in depth portion of the system and selected subsystems are shown in Figure 9.4.2-1.

9.4.2.2.1 General Description

9.4.2.2.1.1 General Area HVAC Subsystem

The general area HVAC subsystem serves personnel areas in the annex building outside the security area. These areas include the men's and women's change and toilet rooms, the ALARA briefing room, and operational support center, offices, corridors, men's and women's rest rooms, conference rooms, and office areas. The general area HVAC subsystem consists of two 50-percent capacity supply air handling units of about 5,100 scfm each and two 50-percent capacity supply air handling units of about 10,500 scfm each, humidifiers, a ducted supply and return air system, diffusers and registers, exhaust fan, automatic controls, and accessories. The air handling units are located on the low roof of the annex building at elevation 117 -6″. The units discharge into ducted supply distribution systems which are routed through the building to provide air into the various rooms and areas served via registers. Electric heating coils are provided in the branch supply duct to the men's and women's change rooms and rest rooms for tempering the supply air.

A humidifier is provided in the system to provide a minimum space relative humidity of 35 percent.

Air from the men's and women's locker, toilet, and shower facilities in the annex building is exhausted directly to atmosphere by exhaust fans. Room air from the remaining areas served is recirculated back to the air handling unit via a ceiling return plenum and a return duct system. Outside make-up air is added to the return air stream at the air handling units to replace air exhausted from toilets and showers in the area served.

9.4.2.2.1.2 Switchgear Room HVAC Subsystem

The switchgear room HVAC subsystem serves electrical switchgear Rooms 1 and 2 in the annex building. The switchgear room HVAC system consists of two 100 percent capacity air handling units, a ducted supply and return air system, and automatic controls and accessories.

The air handling units are located in the north air handling equipment room in the annex building at elevation 135′-3″. They are connected to a common intake plenum located along the east wall adjacent to their air handling equipment room. This plenum also supplies air for the equipment room HVAC subsystem. The air handling units discharge into a common duct distribution system that is routed through the building to the rooms served. Air is returned to the air handling units from the rooms served by a return duct system.

The switchgear room HVAC subsystem is designed so that smoke can be removed after a fire by placing the system in a once-through smoke exhaust ventilation mode. See Appendix 9A for identification of fire areas.

9.4.2.2.1.3 Equipment Room HVAC Subsystem

The equipment room HVAC subsystem serves electrical and mechanical equipment rooms in the annex and auxiliary buildings. These rooms include the non-Class 1E battery charger Rooms 1 and 2, the non-Class 1E battery Rooms 1 and 2, the reactor trip switchgear Rooms I and II, the non-Class 1E penetration room on elevation 100′-0″ and the non-Class 1E penetration room on

elevation 117′-6″. This subsystem also serves the rooms and areas in the annex building. These include two rest rooms, access areas, and corridors. The equipment room HVAC system consists of two 100 percent capacity air handling units, two battery room exhaust fans, a toilet exhaust fan, a ducted supply and return air system, and automatic controls and accessories.

The air handling units are located in the north air handling equipment room in the annex building at elevation 135′-3″. They are connected to a common intake plenum located along the east wall adjacent to their air handling equipment room. This plenum also supplies air for the switchgear room HVAC subsystem. The air handling units discharge into a common duct distribution system that is routed through the buildings to the various areas served. Air is returned to the air handling units from the rooms served (except the battery rooms and rest rooms) by a return duct system. Electric reheat coils are provided in the ductwork to areas requiring close temperature control such as the security rooms and restrooms. Hot water unit heaters (VXS-MY-W01A, B, and C) are provided in the north air handling equipment room to maintain the area above 50°F.

A humidifier is provided in the branch duct to the security areas to provide a minimum space relative humidity of 35 percent.

Each non-Class 1E battery room is provided with an individual exhaust system to prevent the buildup of hydrogen gas in the room. Each exhaust system consists of an exhaust fan, an exhaust air duct and gravity back draft damper located in the fan discharge. Air supplied to the battery rooms by the air handling units is exhausted to atmosphere. Air from the rest rooms is exhausted to atmosphere by a separate exhaust fan.

The portion of the equipment room HVAC subsystem servicing the auxiliary building is designed so that smoke, hot gases, and fire suppressant will not migrate from one fire area to another to the extent that they could adversely affect safe shutdown capabilities, including operator actions. Fire or combination fire and smoke dampers are provided to isolate each fire area from adjacent fire areas during and following a fire in accordance with NFPA 90A (Reference 27) requirements. These combination smoke/fire dampers close in response to smoke detector signals or in response to the heat from a fire. See Appendix 9A for identification of fire areas.

9.4.2.2.1.4 MSIV Compartment HVAC Subsystem

The main steam isolation valve compartment HVAC subsystem serves the two main steam isolation valve compartments in the auxiliary building that contain the main steam and feedwater lines routed between the containment and the turbine building. Each compartment is provided with separate heating and cooling equipment.

The main steam isolation valve compartment HVAC subsystem consists of two 100-percent-capacity supply air handling units per compartment (VXS-MS-04A, B, C, and D) of about 3,300 scfm each with only low efficiency filters, ducted supply air distribution directly to the space served, automatic controls, and accessories for each main steam isolation valve compartment.

The supply air handling units are located directly within the space served. One unit in each compartment normally operates to maintain the temperature of the compartment. The air handling

units can be connected to the standby power system, for investment protection, in the event of loss of the plant ac electrical system.

9.4.2.2.1.5 Mechanical Equipment Areas HVAC Subsystem

The mechanical equipment areas HVAC subsystem serves the ancillary diesel generator room, demineralized water deoxygenating room, boric acid batching room, upper south air handling equipment room, and lower south air handling equipment room in the annex building.

The mechanical equipment areas HVAC subsystem consists of two 50-percent capacity air handling units (VXS-MS-07A and B) with supply fans and return/exhaust fans of about 2,200 scfm each, a ducted supply and return air system, automatic controls, and accessories.

The air handling units are located in the lower south air handling unit equipment room on elevation 135′-3″ of the annex building. They are supplied from the air intake plenum #2 located at the extreme south end of the annex building between elevation 135′-3″ and 158′. This plenum also supplies air for the radiologically controlled area ventilation system, the health physics and hot machine shop HVAC system and the containment air filtration system. The intake is not protected from tornado missiles.

The ancillary diesel generator room is supplied air from the air handling units to maintain normal design temperatures. Air supplied to the room is exhausted direct to outdoors by means of a separate exhaust fan. Ventilation and cooling for the ancillary diesel generator room when the diesel generators operate is provided by opening the doors to allow airflow into the room. Air from the ancillary diesel generator room is exhausted to the outdoors through the diesel generator radiator(s), ducting, backdraft damper(s), and hurricane louvers. There is a manual damper in the duct downstream of each diesel radiator that discharges air into the room. This manual damper can be used to control room temperature in cold weather.

9.4.2.2.1.6 Valve/Piping Penetration Room HVAC System

The valve/piping penetration room HVAC subsystem serves the valve/piping penetration room on elevation 100′-0″ of the auxiliary building. The valve/piping penetration room HVAC subsystem consists of two 100-percent-capacity air handling units (VXS-MS-08A and B) with supply fans of about 1,800 scfm each, a return air duct system, automatic controls, and accessories.

The air handling units are located directly within the space served.

9.4.2.2.2 Component Description

The annex/auxiliary buildings HVAC system is comprised of the following major components. These components are located in buildings on the Seismic Category I Nuclear Island or in the annex building. The seismic design classification, safety classification and principal construction code for Class A, B, C, or D components are listed in Section 3.2. Tables 9.4.2-1 and 9.4.2-2 provide the design parameters for major defense-in-depth components of the system.

Air Handling Units

Air handling units with integral supply and return/exhaust fans are utilized in the equipment room HVAC subsystem, switchgear room HVAC subsystem, and the mechanical equipment areas HVAC subsystem. Each air handling unit consists of a return/exhaust fan, a return/exhaust air plenum, a low efficiency filter bank, a high efficiency filter bank, a hot water heating coil with integral face/bypass damper, a chilled water cooling coil, and a supply air fan.

Supply Air Handling Units

Supply air handling units are utilized in the general area HVAC subsystem, main steam isolation valve compartment HVAC subsystem, and the valve/piping penetration room HVAC subsystem. Each air handling unit consists of a low efficiency filter bank, a hot water heating coil, a chilled water cooling coil, and a supply fan. The general area HVAC subsystem air handling unit also includes a high efficiency filter bank and has face and bypass dampers on the heating coil.

Supply and Exhaust Air Fans

The supply and exhaust fans are centrifugal type, single width single inlet (SWSI) or double width double inlet (DWDI), with high efficiency wheels and backward inclined blades to produce non-overloading horsepower characteristics. Air handling unit fans that have little or no ductwork may utilize forward curved blades. The fans are designed and rated in accordance with ANSI/AMCA 210 (Reference 4), ANSI/AMCA 211 (Reference 5), and ANSI/AMCA 300 (Reference 6).

Low Efficiency Filters and High Efficiency Filters

The low efficiency (25 percent) filters and high efficiency (80 percent) filters have a rated dust spot efficiency based on ASHRAE 52 and 126 (References 7 and 35). The filters meet UL 900 (Reference 8) Class I construction criteria.

Cooling Coils

The chilled water cooling coils are counterflow, finned tubular type. The cooling coils are designed and rated in accordance with ASHRAE 33 (Reference 11) and ANSI/ARI 410 (Reference 12).

Heating Coils

The hot water heating coils are counterflow, finned tubular type. The heating coils are designed and rated in accordance with ASHRAE 33 (Reference 11) and ANSI/ARI 410 (Reference 12).

Electric Heating Coils

The electric heating coils are multi-stage fin tubular type. The electric heating coils meet the requirements of UL 1995 (Reference 10).

Electric Unit Heaters

The electric unit heaters are single-stage or two-stage fin tubular type. The electric unit heaters are UL-listed and meet the requirements of UL 1996 (Reference 26) and the National Electric Code NFPA 70 (Reference 28).

Humidifier

The humidifier is a packaged electric steam generator type which converts water to steam and distributes it through the supply duct system. The humidifier is performance rated in accordance with ARI 640 (Reference 13).

Hot Water Unit Heaters

The hot water unit heaters consist of a fan section and hot water heating coil section factory assembled as a complete and integral unit. The unit heaters are either horizontal discharge or vertical downblast type. The coil ratings are in accordance with ANSI/ARI 410 (Reference 12).

Isolation Dampers

Isolation dampers are bubble tight, single- or parallel-blade type. The isolation dampers have spring return actuators which fail closed on loss-of-electrical power or loss-of-air pressure. The isolation dampers are constructed, qualified and tested in accordance with ANSI/AMCA 500 (Reference 14).

Shutoff, Control, Balancing, and Backdraft Dampers

Multiblade, two-position remotely operated shutoff dampers are parallel-blade type. Multiblade, control and balancing dampers are opposed-blade type. Backdraft dampers are provided to prevent backflow through ventilators, exhaust fans and the valve/piping penetration room air handling units. Air handling unit and fan shutoff dampers are designed for maximum fan static pressure at shutoff flow. Dampers meet the performance requirements of ANSI/AMCA 500 (Reference 14).

Fire Dampers

Fire dampers are provided at duct penetrations through fire barriers to maintain the fire resistance ratings of the barriers. The fire dampers meet the design and installation requirements of UL 555 (Reference 15). Fire dampers are not provided in locations where combination fire/smoke dampers are provided.

Combination Fire/Smoke Dampers

Combination fire/smoke dampers are provided at the duct penetrations through fire barriers between the annex building and the auxiliary building, and to the ICC/non-1E penetration room, to maintain the fire resistance ratings of the barriers. The combination fire/smoke dampers meet the design leakage testing, and installation requirements of UL-555S (Reference 25).

Ductwork and Accessories

Ductwork, duct supports and accessories are constructed of galvanized steel. Ductwork subject to fan shutoff pressure is structurally designed for fan shutoff pressures. Ductwork, supports and accessories meet the design and construction requirements of SMACNA Rectangular and Round Industrial Duct Construction Standards (References 16 and 34) and SMACNA HVAC Duct Construction Standards - Metal and Flexible (Reference 17).

9.4.2.2.3 System Operation

9.4.2.2.3.1 General Area HVAC Subsystem

Normal Plant Operation

During normal plant operation, all four supply air handling units and the toilet/shower and rest room exhaust fans operate continuously to maintain suitable temperatures in the areas served. The temperature of the air supplied by each handling units is controlled by individual temperature controls with their sensors located in the annex building main entrance and in selected spaces. Each temperature sensor sends a signal to a temperature controller which modulates the chilled water control valve and the face and bypass dampers across the supply air heating coil to maintain the area within the design range. The switchover between cooling and heating modes is automatically controlled by the temperature controllers.

Supplemental heating is provided for the men's/women's change room areas by an electric reheat coil located in the supply air duct to the areas served. The reheat coil operates intermittently under the control of its temperature controller with sensor located in the women's change room, which modulates the electric heating elements to maintain the space temperature in the change room areas within the design range.

The supply air is humidified by a common humidifier located in the ductwork downstream of the supply air handling units. Humidistats located in the annex building operate the humidifiers to maintain a minimum space relative humidity of 35 percent in the areas served.

The differential pressure drop across each supply unit filter bank is monitored, and individual alarms are actuated when any pressure drop rises to a predetermined level indicative of the need for filter replacement. To replace the filters on a supply unit, the affected supply fan is stopped and isolated from the duct system by means of isolation dampers. The exhaust fan for the area is also stopped. During filter replacement, the system operates at approximately 50 percent capacity. This mode of operation will maintain a slight positive pressure in the building.

Abnormal Plant Operation

The general area HVAC subsystem is not required to operate during any abnormal plant condition.

9.4.2.2.3.2 Switchgear Room HVAC Subsystem

Normal Plant Operation

During normal plant operation, one air handling unit operates continuously to maintain the indoor temperatures in the two switchgear rooms. The temperature of the air supplied by the air handling unit is maintained at 62°F by a temperature controller based on outside ambient temperature conditions. When the outdoor air temperature is below 62°F, the temperature controller modulates the outside air, return air and exhaust air dampers of the air handling unit to mix return air and outside air in the proper proportion, and modulates the face and bypass dampers of the hot water heating coils to maintain a mixed air temperature of 62°F. A minimum amount of outside air is always provided for ventilation requirements. When the outdoor temperature is above 62°F, the outside air, return air and exhaust air dampers automatically reposition for minimum outside air and the temperature controller modulates the chilled water control valves to maintain the supply air at 62°F. The switchover between cooling and heating modes is automatically controlled by the supply air temperature controllers.

The differential pressure drop across each air handling unit filter bank is monitored and individual alarms are actuated when the pressure drop rises to a predetermined level indicative of the need for filter replacement. To replace the filters on an air handling unit, the unit is stopped and isolated from the duct system by means of isolation dampers. During filter replacement, the second air handling unit operates at full system capacity.

Abnormal Plant Operation

In the event of a loss of the plant ac electrical system, the air handling unit supply and return/exhaust fans are connected to the standby power system to provide ventilation cooling to the diesel bus switchgear. This cooling permits the switchgear to perform its defense in depth functions in support of standby power system operation. In this mode of operation, the switchgear rooms are cooled utilizing once-through ventilation using outdoor air. When in the once-through ventilation mode, the switchgear rooms will be maintained at or below 122°F. Equipment in these rooms that operate following a loss of the plant ac electrical system are designed for continuous operation at this temperature. To maintain the areas above freezing, the mixing dampers will modulate to maintain a supply air temperature of 62°F for outdoor temperatures below 62°F. For outdoor temperature above 62°F, the outside air, return air, and exhaust air dampers are positioned for a once-through flow.

In the event of a fire in a non-1E electrical switchgear room, the combination fire/smoke dampers close automatically to isolate the affected fire area in response to heat from the fire or upon receipt of a smoke signal from an area smoke detector. The VXS subsystem continues to provide ventilation/cooling to the remaining switchgear room and maintains the remaining areas at a slightly positive pressure.

9.4.2.2.3.3 Equipment Room HVAC Subsystem

Normal Plant Operation

During normal plant operation, one air handling unit and both battery room exhaust fans operate continuously to maintain the indoor temperatures in the equipment and security access areas served by the system.

The temperature of the air supplied by the air handling unit is maintained at 62°F by a temperature controller based on outside ambient temperature conditions. When the outdoor air temperature is below 62°F, the temperature controller modulates the outside air, return air and exhaust air dampers of the air handling unit to mix return air and outside air in the proper proportion, and modulates the face and bypass dampers of the hot water heating coils to maintain a mixed air temperature of 62°F. A minimum amount of outside air is always provided for ventilation requirements. When the outdoor air temperature is above 62°F, the outside air, return air and exhaust air dampers automatically reposition for minimum outside air and the temperature controller modulates the chilled water control valves to maintain the supply air at 62°F. The switchover between cooling and heating modes is automatically controlled by the supply air temperature controllers.

Electric reheat coils serving security (rooms 40305 and 40306) are controlled by temperature controllers with sensors located in the areas served. The temperature sensor sends a signal to a temperature controller which modulates the electric heating elements to maintain the security access areas at their design temperatures. Hot water unit heaters operate intermittently to provide supplemental heating for the north air handling equipment room to maintain the area temperature above 50°F.

A humidistat located in the security access area intermittently operates the humidifier to maintain the security office area at a minimum space relative humidity of 35 percent.

The differential pressure drop across each air handling unit filter bank is monitored, and individual alarms are actuated when the pressure drop rises to a predetermined level indicative of the need for filter replacement. To replace the filters of an air handling unit, the unit is stopped and isolated from the duct system by means of isolation dampers. During filter replacement, the second air handling unit operates at full system capacity.

A temperature controller opens the outside air intake and starts and stops the elevator machine room exhaust fan as required to maintain room design temperature conditions. A local thermostat controls the electric unit heater.

Abnormal Plant Operation

In the event of a loss of the plant ac electrical system, the air handling unit supply and return/exhaust fans are connected to the standby power system to provide ventilation cooling to the dc switchgear and inverters. This cooling permits that equipment to perform its defense in depth functions. In this mode of operation, the rooms are cooled utilizing once-through ventilation using outdoor air. When in the once-through ventilation mode, the dc switchgear and inverter

areas will be maintained at or below 122°F. Equipment in those areas that operate following a loss of the plant ac electrical system are designed for continuous operation at this temperature. To maintain the areas above freezing, the mixing dampers will modulate to maintain a supply air temperature of 62°F for outdoor temperatures below 62°F. For outdoor temperature above 62°F, the outside air, return air, and exhaust air dampers are positioned for a once-through flow.

9.4.2.2.3.4 MSIV Compartment HVAC Subsystem

Normal Plant Operation

During normal plant operation, one of the main steam isolation valve compartment air handling units in each compartment operates continuously in a recirculation mode to maintain the indoor temperature in the equipment area served by the system. A temperature controller modulates the chilled water and hot water control valves serving the operating unit to maintain the compartment temperature at or less than 105°F and above a minimum of 50°F. The switchover between cooling and heating modes is automatically controlled by the area temperature controller.

The differential pressure drop across each air handling unit filter bank is monitored and individual alarms are actuated when the pressure drop rises to a predetermined level indicative of the need for filter replacement. An air handling unit may be shutdown for filter replacement or other maintenance as required, with the other air handling unit in the same compartment operating to maintain the area temperature.

Abnormal Plant Operation

The main steam isolation valve compartment HVAC subsystem is not required to operate during abnormal plant conditions.

9.4.2.2.3.5 Mechanical Equipment Areas HVAC Subsystem

During normal plant operation, the air handling units operate continuously to maintain the indoor temperatures in the areas served. The temperature of the air supplied by each air handling unit is controlled by individual temperature controls with their sensors located in the upper south air handling equipment room. The temperature sensor sends a signal to a temperature controller which modulates the face and bypass dampers across the supply air heating coil and the chilled water control valve to maintain the mechanical equipment areas within the design temperature range. A constant volume of outside air is used to provide ventilation and to maintain the area at a slight positive pressure with respect to the surroundings. The switchover between cooling and heating modes is automatically controlled by the area temperature controller.

Differential pressure drop across each air handling unit filter bank is monitored, and individual alarms are actuated when pressure drop rises to a predetermined level indicative of the need for filter replacement. During filter replacement, the system operates at approximately 50 percent capacity. To replace the filters of an air handling unit, the unit is stopped and isolated from the duct system by means of isolation dampers. To replace the filters of an air handling unit, the unit is stopped and isolated from the duct system by means of isolation dampers.

The exhaust fan for the ancillary diesel generator room operates continuously for room ventilation.

Abnormal Plant Operation

The mechanical equipment areas HVAC subsystem is not required to operate during abnormal plant conditions.

When the ancillary diesel generator sets are operated, a manual damper is opened as required and the outside door is opened to maintain acceptable temperatures.

9.4.2.2.3.6 Valve/Piping Penetration Room HVAC Subsystem

Normal Plant Operation

During normal plant operation, one air handling unit operates continuously in a recirculation mode to maintain the indoor temperature in the room. A temperature controller modulates the chilled water control valve and opens and closes the hot water control valve serving the operating unit to maintain the area temperature at or less than 105°F and above a minimum of 50°F. The switchover between cooling and heating modes is automatically controlled by the area temperature controller.

The differential pressure drop across each air handling unit filter bank is monitored, and individual alarms are actuated when the pressure drop rises to a predetermined level indicative of the need for filter replacement.

Abnormal Plant Operation

The valve/piping penetration room HVAC subsystem is not required to operate during abnormal plant conditions.

9.4.2.3 Safety Evaluation

The annex/auxiliary buildings nonradioactive HVAC system has no safety-related function and therefore requires no nuclear safety evaluation.

9.4.2.4 Tests and Inspections

The annex/auxiliary buildings nonradioactive HVAC system is designed to permit periodic inspection of system components. Each component is inspected prior to installation. Components of each system are accessible for periodic inspection during normal plant operation. A system air balance test and adjustments to design conditions are made during the plant preoperational test program. Air flow rates are measured and balanced in accordance with the guidelines of SMACNA HVAC Systems – Testing, Adjusting, and Balancing (Reference 19). Instruments are calibrated during testing. Automatic controls are tested for actuation at the proper setpoints. Alarm functions are checked for operability.

9.4.2.5 Instrumentation Applications

The annex/auxiliary buildings nonradioactive HVAC system operation is controlled by the plant control system (PLS). Refer to subsection 7.1.1 for a discussion of the plant control system.

Temperature controllers and thermostats maintain the proper space temperatures. Supply air temperature is controlled by either sensing local room temperature or by sensing the supply air temperature in the air handling unit discharge duct, depending on the subsystem. Unit heaters are controlled by local thermostats. Temperature indication and alarms are accessible locally via the plant control system.

Temperature is indicated for each air handling unit supply air discharge duct, except for local recirculation units such as those in the main steam isolation valve compartment and valve/piping penetration room.

Operational status of fans is indicated in the main control room. The fans and air handling units can be placed into operation or shutdown from the main control room or locally.

Differential pressure indication is provided for each of the filters in the air handling units and an alarm for high pressure drop is provided for each air handling unit.

Airflow is indicated for the air handling unit and exhaust fan discharge ducts. Alarms are provided for low air flow rates in the fan discharge ducts.

An alarm is provided for smoke in discharge ducts from the air handling units.

Position indicating lights are provided for automatic dampers.

9.4.3 Radiologically Controlled Area Ventilation System

The radiologically controlled area ventilation system (VAS) serves the fuel handling area of the auxiliary building, and the radiologically controlled portions of the auxiliary and annex buildings, except for the health physics and hot machine shop areas which are provided with a separate ventilation system (VHS).

9.4.3.1 Design Basis

9.4.3.1.1 Safety Design Basis

The radiologically controlled area ventilation system serves no safety-related function and therefore has no nuclear safety design basis. System equipment and ductwork located in the nuclear island whose failure could affect the operability of safety-related systems or components are designed to seismic Category II requirements. The remaining portion of the system is nonseismic.

9.4.3.1.2 Power Generation Design Basis

The radiologically controlled area ventilation system provides the following functions:

- Provides ventilation to maintain the equipment rooms within their design temperature range
- Provides ventilation to maintain airborne radioactivity in the access areas at safe levels for plant personnel

- Maintains the overall airflow direction within the areas it serves from areas of lower potential airborne contamination to areas of higher potential contamination
- Maintains each building area at a slightly negative pressure to prevent the uncontrolled release of airborne radioactivity to the atmosphere or adjacent clean plant areas
- Automatically isolates selected building areas from the outside environment by closing the supply and exhaust duct isolation dampers and starting the containment air filtration system when high airborne radioactivity in the exhaust air duct or high ambient pressure differential is detected. See subsection 9.4.7 for a description of the containment air filtration system.

The system maintains the following room temperatures based on the maximum and minimum normal outside air temperature conditions shown in Chapter 2, Table 2-1:

Access and Equipment Areas	**Temperatures (°F)**
Auxiliary/Annex Building Subsystem	
Degasifier column	50-130
RNS and CVS pump rooms (pumps not operating)	50-104
RNS and CVS pump rooms (pumps operating)	50-130
Containment purge exhaust filter rooms (fans not operating)	50-104
Containment purge exhaust filter rooms (fans operating)	50-130
Liquid radwaste tank rooms	50-130
Liquid radwaste pump rooms	50-104
HVAC equipment room	50-104
Gaseous radwaste equipment rooms	50-104
Spent fuel pool pump and heat exchanger rooms	50-104
Annex building staging and storage area	50-104
Other corridors and staging areas	50-104
Fuel Handling Area Ventilation Subsystem	
Rail car bay/filter storage area	50-104
Spent resin equipment rooms	50-130
Corridors and access areas	50-104

Occupied Areas	**Temperatures (°F)**
Fuel Handling Area Ventilation Subsystem	
Fuel handling area	50-96

Auxiliary/Annex Building Ventilation Subsystem

Radiation chemistry laboratory..... 73-78
Primary sample room 50-104
Security rooms..... 73-78

9.4.3.2 System Description

The radiologically controlled area ventilation system consists of the following subsystems:

- Auxiliary/annex building ventilation subsystem
- Fuel handling area ventilation subsystem

The defense in depth portion of the system is shown in Figure 9.4.3-1.

9.4.3.2.1 General Description

9.4.3.2.1.1 Auxiliary/Annex Building Ventilation Subsystem

The auxiliary/annex building ventilation subsystem serves radiologically controlled equipment, piping and valve rooms and adjacent access and staging areas. See Figure 9.4.3-1, sheet 2 of 3, for a complete listing of rooms and corridors serviced by this subsystem. The auxiliary/annex building ventilation subsystem consists of two 50 percent capacity supply air handling units of about 18,000 scfm each, a ducted supply and exhaust air system, isolation dampers, diffusers and registers, exhaust fans, automatic controls and accessories. The supply air handling units are located in the south air handling equipment room of the annex building at elevation 158 -0″. They are connected to the air intake plenum #3 located in the extreme south end of the annex building. This common intake plenum is described in subsection 9.4.7. The units discharge into a ducted supply distribution system which is routed through the radiologically controlled areas of the auxiliary and annex buildings. The supply and exhaust ducts have isolation dampers that close to isolate the auxiliary and annex buildings from the outside environment when high airborne radioactivity is detected in the exhaust air duct. The supply and exhaust ducts are configured so that two building zones may be independently isolated. The annex building staging and storage area, containment air filtration exhaust rooms, containment access corridor, and adjacent auxiliary building staging, equipment areas, middle annulus, middle annulus access room, and security rooms are aligned to one zone. The other zone includes the remaining rooms and corridors shown in Figure 9.4.3-1 sheet 2 of 3, including but not limited to the radiation chemistry laboratory, primary sample room, spent fuel pool cooling water pump and heat exchanger rooms, normal residual heat removal pump and heat exchanger rooms, CVS makeup pump room, lower annulus, and various radwaste equipment rooms, pipe chases, and access corridors. A radiation monitor is located in the exhaust air duct from each zone.

The two 50 percent capacity exhaust air fans sized to allow the system to maintain a negative pressure are located in the upper radiologically controlled area ventilation system equipment room at elevation 145′-9″ of the auxiliary building. The exhaust air ductwork is routed to minimize the spread of airborne contamination by directing the supply airflow from the low radiation access areas into the radioactive equipment and piping rooms with a greater potential for airborne radioactivity. Additionally, the exhaust air ductwork is connected to the radioactive waste drain

system (WRS) sump to maintain the sump atmosphere at a negative air pressure to prevent the exfiltration of potentially contaminated air into the surrounding area. The sump vent line is constructed of pipe, which is routed upward from the sump to the interface with the HVAC system. The exhaust air ductwork is connected to the radwaste effluent holdup tanks to prevent the potential buildup of airborne radioactivity or hydrogen gas within these tanks. The effluent holdup tanks have an overflow line to the WRS from a nozzle on the side of the tank, and a vent line from a nozzle on the top of the tank. The vent line is constructed of pipe, and is routed upward from the tank to the interface with the HVAC system. The exhaust fans discharge the exhaust air into the plant vent for monitoring of offsite airborne radiological releases.

The ventilation airflow dilutes potential airborne contamination to maintain the concentration at the site boundary within 10 CFR 20 (Reference 21) allowable effluent concentration limits and the internal room airborne concentrations within 10 CFR 20 occupational derived air concentration (DAC) limits during normal plant operation.

Unit coolers are located in the normal residual heat removal system (RNS) and chemical and volume control system (CVS) pump rooms because they have significant cooling loads on an intermittent basis when large equipment is operating. Each unit cooler is sized to accommodate 100 percent of its corresponding pump cooling load. The unit coolers are provided with chilled water from redundant trains of the central chilled water system (VWS) low capacity subsystem. The normal residual heat removal pump room unit coolers have two cooling coils per unit cooler so that chilled water supplied by either train A or train B alone can support concurrent operation of both normal residual heat removal system pumps. The two chemical and volume control makeup pump room unit coolers are connected to redundant trains of the chilled water system; however, operation of either the train A or train B unit cooler alone maintains the common makeup pump room temperature conditions and supports operation of either makeup pump. Condensation from these cooling coils drains to the WRS.

Heating coils are located in the supply air ducts serving plant areas that require supplemental heating during periods of cold outside air temperature conditions. The heating coils are supplied with hot water from the hot water heating system (VYS). The radiation chemistry laboratory and security room supply air ducts are provided with local electric coils and humidifiers to maintain the environmental conditions within the areas suitable for personnel comfort. Electric unit heaters provide supplemental heating in the middle annulus.

The upper annulus is separated from the middle annulus area of the auxiliary building by a concrete floor section and flexible seals that connects the containment steel shell to the shield building. The annulus seal provides a passive barrier during normal plant operation or when the auxiliary building is isolated, preventing the exfiltration of unmonitored releases from the middle annulus to the environment.

9.4.3.2.1.2 Fuel Handling Area Ventilation Subsystem

The fuel handling area ventilation subsystem serves the fuel handling area, rail car bay/filter storage area, resin transfer pump/valve room, spent resin tank room, waste disposal container area, WSS (spent resin) valve/piping area and elevator machine room. The fuel handling area ventilation subsystem consists of two 50 percent capacity supply air handing units of about

9,500 scfm each, a ducted supply and exhaust air system, isolation dampers, diffusers, registers, exhaust fans, automatic controls and accessories. Hot water heating coils supplied with water from the hot water heating system (VYS) and cooling coils supplied with water from the central chilled water system (VWS) are used to maintain ambient room temperatures within the normal range. The ventilation airflow capacity is designed to maintain environmental conditions that support worker efficiency during fuel handling operations based on a maximum wetbulb globe temperature of 80°F (96°F drybulb) as defined by EPRI NP-4453 (Reference 22). The supply air handling units are located in the south air handling equipment room of the annex building at elevation 135′-3″. They are connected to the air intake plenum #2 located at the south end of the annex building. This common intake plenum is described in subsection 9.4.2. The units discharge into a ducted supply distribution system which is routed to the fuel handling and rail car bay/filter storage areas of the auxiliary building. The supply and exhaust ducts are provided with isolation dampers that close when high airborne radioactivity in the exhaust air or high pressure differential with respect to the outside atmosphere is detected.

The two 50 percent capacity exhaust air fans sized to allow the system to maintain a negative pressure are located in the upper radiologically controlled area ventilation system equipment room at elevation 145′-9″ of the auxiliary building. The supply and exhaust ductwork is arranged to exhaust the spent fuel pool plume and to provide directional airflow from the rail car bay/filter storage area into the spent resin equipment rooms. The exhaust fans discharge the normally unfiltered exhaust air into the plant vent for monitoring of offsite airborne gaseous and other radiological releases.

The ventilation airflow dilutes potential airborne contamination to maintain the concentration at the site boundary within 10 CFR 20 (Reference 21) allowable effluent concentration limits and the internal room airborne concentrations within 10 CFR 20 occupational derived air concentration (DAC) limits during normal plant operation.

9.4.3.2.2 Component Description

The radiologically controlled area ventilation system is comprised of the following major components. These components are located in buildings on the Seismic Category I Nuclear Island and the Seismic Category II portion of the annex building. The seismic design classification, safety classification and principal construction code for Class A, B, C, or D components are listed in Section 3.2. Table 9.4.3-1 provides design parameters for major defense in depth components in the system.

Supply Air Handling Units

Each supply air handling unit consists of a low efficiency filter bank, a high efficiency filter bank, a hot water heating coil bank, a chilled water cooling coil bank, and a supply fan.

Supply and Exhaust Air Fans

The supply and exhaust air fans are centrifugal type, single width single inlet (SWSI) or double width double inlet (DWDI), with high efficiency wheels and backward inclined blades to produce non-overloading horsepower characteristics. The fans are designed and rated in accordance with

ANSI/AMCA 210 (Reference 4), ANSI/AMCA 211 (Reference 5), and ANSI/AMCA 300 (Reference 6).

Unit Coolers

Each unit cooler consist of a low efficiency filter bank, a chilled water cooling coil bank and a supply fan. The normal residual heat removal system pump room unit coolers have redundant cooling coil banks. The principal construction code is the manufacturer's standard.

Low and High Efficiency Filters

The low efficiency (25 percent) filters and high efficiency (80 percent) filters have a rated dust spot efficiency based on ASHRAE 52 and 126 (References 7 and 35). The filters minimum average dust spot efficiencies for the defense in depth filters are shown in Table 9.4.3-1. The filters meet UL 900 (Reference 8) Class I construction criteria.

Electric Unit Heaters

The electric unit heaters are single-stage or two-stage fin tubular type. The electric unit heater are UL-listed and meet the requirements of UL-1996 (Reference 26) and National Electric Code (Reference 28).

Hot Water Heating Coils

The hot water heating coils are finned tubular type. The outside supply air heating coils are provided with integral face and bypass dampers to prevent freeze damage when modulating the heat output. Coils are performance rated in accordance with ANSI/ARI 410 (Reference 12).

Electric Heating Coils

The electric heating coils are multistage fin tubular type. The electric heating coils meet the requirements of UL 1995 (Reference 10).

Cooling Coils

The chilled water cooling coils are counterflow, finned tubular type. The cooling coils are designed and rated in accordance with ASHRAE 33 (Reference 11) and ANSI/ARI 410 (Reference 12).

Humidifier

The humidifier is a packaged electric steam generator type which converts water to steam and distributes it through the supply duct system. The humidifier is performance rated in accordance with ARI 640 (Reference 13).

Fire Dampers

Fire dampers are provided at duct penetrations through fire barriers to maintain the fire resistance rating of the barriers. The fire dampers meet the design, testing and installation requirements of UL-555 (Reference 15).

Shutoff and Balancing Dampers

Multiblade, two-position remotely operated shutoff dampers are parallel-blade type. Multiblade, balancing dampers are opposed-blade type. Air handling unit and fan shutoff dampers are designed for maximum fan static pressure at shutoff flow and meet the performance requirements of ANSI/AMCA 500 (Reference 14).

Isolation Dampers

Isolation dampers are bubble tight, single- or parallel-blade type. The isolation dampers have spring return actuators which fail closed on loss of electrical power or loss of air pressure. The isolation dampers are constructed, qualified and tested in accordance with ANSI/AMCA 500 (Reference 14).

Ductwork and Accessories

Ductwork, duct supports and accessories are constructed of galvanized steel. Ductwork subject to fan shutoff pressure is structurally designed for fan shutoff pressures. Ductwork, supports and accessories meet the design and construction requirements of SMACNA Rectangular and Round Industrial Duct Construction Standards (References 16 and 34) and SMACNA HVAC Duct Construction Standard - Metal and Flexible (Reference 17).

9.4.3.2.3 System Operation

9.4.3.2.3.1 Auxiliary/Annex Building Ventilation Subsystem

Normal Plant Operation

During normal plant operation, both supply air handling units and both exhaust fans operate continuously to ventilate the areas served on a once-through basis. The supply airflow rate is modulated to maintain the areas served at a slightly negative pressure differential with respect to the outside environment. The exhaust air is unfiltered and directed to the plant vent for discharge and monitoring of offsite gaseous releases.

The temperature of the supply air is controlled by temperature sensors located in the supply air ducts. When the supply air temperature is low, the face and bypass dampers across the supply air hot water heating coil are modulated to heat the supply air. Local thermostats operate supply duct heating coils and unit heaters to provide supplemental heating for building areas that have conductive heat loss to the outside environment during periods of cold outside temperature conditions. When the supply air temperature is high, the flow of chilled water is modulated to cool the supply air. The ventilation air is continuously monitored by smoke monitors located in the common ductwork downstream of the supply air handling units and upstream of the exhaust fans.

A supply air handling unit is automatically shut down if one of the following conditions is detected:

- Airflow rate of the fan is below a predetermined setpoint
- Supply air temperature is below a predetermined setpoint

Each chemical and volume control system makeup pump and normal residual heat removal system pump unit cooler automatically starts whenever the associated pump receives a start signal or a high room temperature signal.

The gaseous radwaste equipment areas have sufficient ventilation to remove hydrogen gas that may leak from the radwaste equipment into the equipment rooms to maintain the concentration of hydrogen below a safe level of about 1 percent. Instrumentation available to monitor hydrogen concentration is listed in Table 11.3-2.

Abnormal Plant Operation

If high airborne radioactivity is detected in the exhaust air from the auxiliary or annex buildings, the supply and exhaust duct isolation dampers automatically close to isolate the affected area from the outside environment. The containment air filtration system mitigates the exfiltration of unfiltered airborne radioactivity by maintaining the isolated zone at a slightly negative pressure with respect to the outside environment and adjacent unaffected plant areas. The auxiliary/annex building ventilation subsystem remains in operation at a reduced capacity if either the auxiliary or annex building is not isolated. A disruption in the normal ventilation airflow rate that causes a high pressure differential with respect to the outside environment causes the same automatic actuations. The containment air filtration system maintains a slightly negative pressure differential with respect to the outside environment until operation of the auxiliary/annex building ventilation subsystem is restored. Refer to subsection 9.4.7 for a description of the containment air filtration system.

If smoke is detected in the supply or exhaust air ducts, an alarm is initiated in the main control room. The auxiliary/annex building ventilation subsystem remains in operation unless plant operators determine that there is a need to manually shut down the subsystem. In the event of a fire occurring within the auxiliary or annex buildings, local fire dampers automatically isolate the HVAC ductwork penetrating the fire area when the local air temperature exceeds predetermined setpoints.

In the event of a loss of the plant ac electrical system, the unit coolers serving the normal residual heat removal, and chemical and volume control pump rooms can be powered by the onsite standby diesel generators.

9.4.3.2.3.2 Fuel Handling Area Ventilation Subsystem

Normal Plant Operation

During normal plant operation, both supply air handling units and both exhaust fans operate continuously to ventilate the areas served on a once-through basis. The supply airflow rate is modulated to maintain the areas served at a slightly negative pressure differential with respect to

the outside environment. The exhaust air is unfiltered and directed to the plant vent for discharge and monitoring of offsite gaseous releases.

The temperature of the supply air is controlled by temperature sensors located in the supply air ducts. When the supply air temperature is low, the face and bypass dampers across the supply air hot water heating coil are modulated to heat the supply air. A local thermostat provides supplemental heating in the rail car bay/filter storage area by controlling a supply duct heating coil. When the supply air temperature is high, the flow of chilled water is modulated to cool the supply air. The ventilation air is continuously monitored by a smoke monitor located in the common ductwork downstream of the supply air handling units and by a monitor upstream of the exhaust fans.

A supply air handling unit is automatically shut down if one of the following conditions is detected:

- Airflow rate of the operating fan is below a predetermined setpoint
- Supply air temperature is below a predetermined setpoint

Abnormal Plant Operation

If high airborne radioactivity is detected in the exhaust air from the fuel handling area, the supply and exhaust duct isolation dampers automatically close to isolate the fuel handling area from the outside environment. The containment air filtration system mitigates exfiltration of unfiltered airborne radioactivity by maintaining the isolated zone at a slightly negative pressure differential with respect to the outside environment and adjacent unaffected plant areas. A disruption in the normal ventilation airflow rate that causes a high pressure differential with respect to the outside environment causes the same automatic actuations. The containment air filtration system maintains a slightly negative pressure differential with respect to the outside environment until operation of the fuel handling area ventilation subsystem is restored. Refer to subsection 9.4.7 for a description of the containment air filtration system.

If smoke is detected in the supply or exhaust air ducts, an alarm is initiated in the main control room. The fuel handling area subsystem remains in operation unless plant operators determine that there is a need to manually shut down the subsystem. In the event of a fire occurring within the fuel handling area, fire dampers automatically isolate the HVAC ductwork penetrating this fire area when the local air temperature exceeds predetermined setpoints.

9.4.3.3 Safety Evaluation

The radiologically controlled area ventilation system has no safety-related function and therefore requires no nuclear safety evaluation.

The isolation dampers for the fuel handling area, auxiliary and annex buildings are provided to help keep normal plant releases below 10 CFR 20 (Reference 21) limits and 10 CFR 50 Appendix I (Reference 20) guidelines in the event of an abnormal release of airborne radioactivity.

9.4.3.4 Tests and Inspections

The radiologically controlled area ventilation system is designed to permit periodic inspection of system components. Each component is inspected prior to installation. Components of each system are accessible for periodic inspection during normal plant operation. A system air balance test and adjustment to design conditions is conducted in the course of the plant preoperational test program. Airflow rates are measured and balanced in accordance with the guidelines of SMACNA HVAC Systems – Testing, Adjusting and Balancing (Reference 19). Instruments are calibrated during testing. Automatic controls are tested for actuation at the proper setpoints. Alarm functions are checked for operability.

9.4.3.5 Instrumentation Applications

The radiologically controlled area ventilation system is controlled by the plant control system (PLS). Refer to subsection 7.1.1 for a discussion of the plant control system.

Temperature controllers maintain the proper air temperatures and provide indication and alarms. Main control room temperature indication is provided for the normal residual heat removal system pump rooms, and the chemical and volume control makeup pump room to allow room temperatures to be verified during pump operation without requiring personnel access to these rooms.

Operational status of fans and dampers is indicated in the main control room. Fans and air handling units can be placed into operation or shut down from the main control room.

Differential pressure indication and high differential pressure alarms are provided for the filters in the air handling units and room coolers. Pressure differential indication and alarms are provided via instruments (VAS-030, VAS-032, and VAS-033) to control the negative pressure in the radiologically controlled areas of the auxiliary and annex buildings.

Radioactivity indication and alarms are provided to inform the main control room operators of gaseous radioactivity concentrations in the exhaust ducts from the fuel handling area and radiologically controlled areas of the auxiliary and annex buildings.

Flow indication and alarms are provided to alert plant operators to equipment malfunctions. Smoke alarms are provided.

9.4.4 Balance-of-Plant-Interface

Not applicable to AP1000.

9.4.5 Engineered Safety Features Ventilation System

Not applicable to AP1000.

9.4.6 Containment Recirculation Cooling System

The containment recirculation cooling system controls building air temperature and humidity to provide a suitable environment for equipment operability during normal operation and shutdown.

9.4.6.1 Design Basis

9.4.6.1.1 Safety Design Basis

The containment recirculation cooling system serves no safety-related function and therefore has no nuclear safety design basis. The containment recirculation system is not required to mitigate the consequences of a design basis accident or loss of coolant accident. System equipment and ductwork whose failure could affect the operability of safety-related systems or components are designed to seismic Category II requirements. The remaining portion of the system is nonseismic.

9.4.6.1.2 Power Generation Design Basis

The containment recirculation cooling system provides the following functions:

- Controls the containment thermal environment to maintain an average bulk air temperature below 120°F during normal operation
- Controls the containment thermal environment to maintain an average bulk air temperature below 70°F and above 50°F for personnel accessibility and equipment operability during refueling and plant shutdown
- Maintains a homogeneous containment temperature and pressure during containment integrated leak rate testing (ILRT)
- Maintains a homogeneous containment temperature and pressure during a loss of the plant ac electrical system
- Controls the reactor cavity area average concrete temperature to less than 150°F with a maximum local area temperature of 200°F

9.4.6.2 System Description

The containment recirculation cooling system is shown in Figure 9.4.6-1.

9.4.6.2.1 General Description

The containment recirculation cooling system is comprised of two 100 percent capacity skid-mounted fan coil unit assemblies with a total of four 50 percent capacity fan coil units which connect to a common duct ring header and distribution system. Each fan coil unit contains a fan and associated cooling coil banks. The two fan coil unit assemblies are located on a platform at elevation 153′-0″, approximately 180 degrees apart to provide a proper return air and mixing pattern through the ring header. The top of the ring header is approximately at elevation 176′-6″. The ring header and the fan assemblies are designed to provide uniform air and temperature

distribution inside the containment, considering the possibility that one fan coil assembly may be out of service.

The cross-connections between the central chilled water system piping for containment cooling and hot water heating system piping for containment heating are located outside the containment. The water piping inside containment is common to both the central chilled water system and hot water heating system.

9.4.6.2.2 Component Description

The containment recirculation cooling system is comprised of the following components. These components are located in buildings on the Seismic Category I Nuclear Island. Table 9.4.6-1 provides design parameters for the major components of the system.

Containment Recirculation Fan Coil Units

Each fan coil unit assembly consists of two separate but physically connected 50 percent capacity fan coil units. Each fan coil unit assembly is comprised of a return air mixing plenum section with a physical barrier in the middle and three cooling coils attached to the sides of each plenum section. The cooling coils are counterflow finned tubular type. The cooling coils are rated and meet the performance requirements in accordance with ANSI/ARI 410 (Reference 12) and ASHRAE 33 (Reference 11).

The recirculation fans are vane axial upblast type, direct driven with a high efficiency wheel, adjustable blades and an inlet bell. The fans are mounted vertically on top of the mixing air plenum section. The fans are designed with a non-overloading two-speed motor. The high speed is used during normal operation and the low speed is used during high ambient air density operating conditions such as the integrated leak rate testing. The fans are designed and rated in accordance with ANSI/AMCA 210 (Reference 4), ANSI/AMCA 211 (Reference 5), and ANSI/AMCA 300 (Reference 6). Fans are factory tested and rated for performance in accordance with ANSI/AMCA 210, ANSI/AMCA 211 and ANSI/AMCA 300.

Pressure Relief Damper

Pressure relief dampers relieve high pressure differential across the ductwork to protect the equipment or components from possible damage resulting from abnormal containment pressure transients. The pressure relief dampers are the weight loaded type. The damper(s) will be placed in their standard design positions during final duct layout. They will be located so that the entire containment ring duct can be relieved without damage. They meet the performance and testing requirements of ANSI/AMCA-211 (Reference 5) and ANSI/AMCA-500 (Reference 14).

Ductwork and Accessories

Ductwork, accessories, and duct supports are constructed of galvanized steel and structurally designed to accommodate fan shutoff pressures. The ductwork meets the design, testing and construction requirements according to SMACNA HVAC Duct Construction Standards – Metal and Flexible (Reference 17).

Balancing and Backdraft Dampers

Multiblade, balancing dampers are opposite-blade type. Backdraft dampers are provided to prevent reverse flow through the standby fan while the redundant fan is operating. The backdraft dampers also allow start up of the standby fan while the redundant fan remains in operation. The balancing and backdraft dampers are designed for the same differential pressure as the duct section in which they are located and meet the performance requirements in according with ANSI/AMCA 211 (Reference 5) and ANSI/AMCA500 (Reference 14).

9.4.6.2.3 System Operation

Normal Plant Operation

During normal plant operation, one of the two 50 percent capacity fans in each fan coil unit assembly draws air from the upper levels of the operating floor and delivers cooling air through the ring duct and the secondary ductwork distribution system to the cubicles, compartments, and access areas above and below the operating floor. In addition, cooling air is delivered to the reactor cavity and reactor support areas to maintain appropriate local area and concrete temperatures. The normal supply temperature is 60°F in order to meet the environmental design requirements during various modes of operation.

As the supply air absorbs the heat released from various components inside containment, return air rises through vertical passages and openings due to its lower density to the upper containment level where it is again drawn into the fan coil units, cooled, dehumidified, and recirculated.

The standby fan coil units will be started automatically if one of the following events occurs:

- Air discharge flow rate from the operating fans decreases to a predetermined setpoint
- Air discharge temperature from the operating fan coil unit is above or below a predetermined setpoint
- Electrical and/or control power is lost

Fan coil unit supply fans are connected to 480V buses with backup power supply from the onsite standby diesel generators. Following a reactor shutdown when the outside air temperature is below a predetermined temperature, the fan coil units cooling water supply will be manually realigned by the operators from the central chilled water system to the hot water heating system. Refer to subsection 9.2.7 for further details.

Shutdown and Refueling Operation

During reactor shutdown, the system maintains the average bulk air temperature within appropriate limits for personnel access and maintenance. In addition, a steam generator maintenance space ventilation subsystem with a portable exhaust air filtration unit is available. The maintenance ventilation subsystem is designed to protect maintenance personnel and to control the spread of airborne contamination from the steam generator compartments to the other containment areas. The steam generator maintenance space ventilation subsystem consists of

permanently installed exhaust ductwork with flexible hose connections in the vicinity of the steam generator channel heads. The other end of ductwork can be connected to a portable exhaust air filtration unit. During maintenance ventilation subsystem operation, flexible hoses can be connected to the exhaust ductwork to allow the portable exhaust air filtration unit to clean up and exhaust the compartment air to containment atmosphere, the supply air distribution system to each steam generator compartment is isolated by closing dampers. Local exhaust connections with flexible hoses can be connected to the maintenance ventilation subsystem ductwork or piping to be used for clean up of localized airborne contamination.

Integrated Leak Rate Testing Operation

During integrated leak rate testing, fan coil unit operation is controlled by the main control room operator. The fan coil unit vaneaxial fans are operated at low speed to prevent the fan motors from exceeding their rated horsepower while equalizing the containment air temperature and pressure which could affect the containment integrated leak rate testing results. The recirculation fan coil units draw air from the upper levels of the operating floor and deliver airflow through the ring header and its distribution ductwork that is connected to equipment compartments, cubicles, and access areas above and below the operating floor.

Abnormal Plant Operation

The containment recirculation system is not required to mitigate the consequences of a design basis fuel handling accident or a loss of coolant accident. If the system is available following abnormal operational transients, it can be operated at reduced speed for post-event recovery operations to lower the containment temperature and pressure.

The power supplies to the containment recirculation cooling system are provided by the plant ac electrical system and the onsite standby diesel generators. In the event of a loss of the plant ac electrical system, the containment recirculation components can be connected to the onsite standby diesel generators in accordance with the optional electrical load sequencing.

9.4.6.3 Safety Evaluation

The containment recirculation cooling system has no safety function and therefore requires no nuclear safety evaluation. The containment recirculation cooling system is designed to preclude damage to safety-related systems, structures, or components as a result of a seismic event.

9.4.6.4 Tests and Inspections

The containment recirculation cooling system is designed to permit periodic inspection of system components. Each component is inspected prior to installation. Components of the system are accessible for periodic inspection. A system air balance test and adjustment to design conditions is conducted in the course of the plant preoperational test program. Instruments are calibrated during testing. Automatic controls are tested for actuation at the proper setpoints. Alarm functions are checked for operability.

The system airflows are balanced in accordance with SMACNA HVAC Systems - Testing, Adjusting and Balancing (Reference 19).

9.4.6.5 Instrumentation Application

The containment recirculation cooling system is controlled by the plant control system. Process indication and alarm signals are locally accessible through the plant control system. Refer to subsection 7.1.1 for a description of the plant control system.

Temperature controllers are provided in the ring headers of the corresponding containment recirculation fan coil unit which provide an input signal to modulate the central chilled water system supply valves to the cooling coils. The containment volumetric average high and low temperature are monitored and alarmed when the temperature is out of the normal operating range. The ambient temperature in a specific equipment compartment or areas of the containment are monitored and alarmed.

The discharge flowrate from each containment recirculation fan unit is monitored and low flow condition is alarmed to alert the operator for a manual start of the spare fan unit. Flow to the reactor cavity is also monitored and low flow condition is alarmed.

9.4.7 Containment Air Filtration System

The containment air filtration system (VFS) serves the containment, the fuel handling area and the other radiologically controlled areas of the auxiliary and annex buildings, except for the hot machine shop and health physics areas which are served by a separate ventilation system.

9.4.7.1 Design Basis

9.4.7.1.1 Safety Design Basis

The containment air filtration system provides the safety-related functions of containment isolation and containment vacuum relief. System equipment and ductwork whose failure could affect the operability of safety-related systems or components are designed to seismic Category II requirements. The remaining portion of the system is non-seismic. The containment isolation function is described in subsection 6.2.3. The containment vacuum relief function automatically adjusts the internal containment pressure as it approaches the analyzed design parameters described in subsection 6.2.1.1.4. This adjustment in the pressure across the containment shell preserves the structural integrity of the shell by maintaining the differential pressure within the allowable limits as defined by the structural analysis described in subsection 3.8.2. The vacuum relief function is actuated on the Low-2 containment pressure signal and manually.

9.4.7.1.2 Power Generation Design Basis

Containment Area

The containment air filtration system provides the following functions:

- Provides intermittent flow of outdoor air to purge the containment atmosphere of airborne radioactivity during normal plant operation, and continuous flow during hot or cold plant shutdown conditions to provide an acceptable airborne radioactivity level prior to personnel access

- Provides intermittent venting of air into and out of the containment to maintain the containment pressure within its design pressure range during normal plant operation
- Directs the exhaust air from the containment atmosphere to the plant vent for monitoring, and provides filtration to limit the release of airborne radioactivity at the site boundary within acceptable levels
- Monitors gaseous, particulate and iodine concentration levels discharged to the environment through the plant vent

The system conditions and filters outside air supplied to the containment for compatibility with personnel access during maintenance and refueling operations. Based on the maximum and minimum outside air normal temperature conditions shown in Chapter 2, Table 2-1, the system supplies air between 50 and 70°F. The air is distributed and conditioned within the containment by the containment recirculation system (subsection 9.4.6).

Radiologically Controlled Areas Outside Containment

The containment air filtration system provides filtration of exhaust air from the fuel handling area, auxiliary, or annex buildings to maintain these areas at a slightly negative pressure with respect to the adjacent areas when the radiologically controlled area ventilation system detects high airborne radioactivity or high pressure differential. Refer to subsection 9.4.3 for a description of the radiologically controlled area ventilation system.

9.4.7.2 System Description

The containment air filtration system is shown in Figure 9.4.7-1.

9.4.7.2.1 General Description

The containment air filtration system consists of two 100 percent capacity supply air handling units, a ducted supply and exhaust air system with containment isolation valves and piping, registers, exhaust fans, filtration units, automatic controls and accessories. The supply air handling units are located in the south air handling equipment room of the annex building at elevation 158′-0″. The supply air handling units are connected to a common air intake plenum, located at the south end of the fan room. The common air intake plenum #3 is located at the extreme south end of the annex building between elevation 158′-0″ and about 180′-0″. This plenum supplies air for the radiologically control area ventilation system, and the containment air filtration system. The intake is not protected from tornado missiles. The containment air filtration system supply air handling units discharge the supply air towards the east containment recirculation cooling system (VCS) recirculation unit to distribute the purge air within the containment. Refer to subsection 9.4.6 for a description of the containment recirculation cooling system.

The exhaust air filtration units are located within the radiologically controlled area of the annex building at elevation 135′-3″ and 146′-3″. The filtration units are connected to a ducted system with isolation dampers to provide HEPA filtration and charcoal adsorption of exhaust air from the containment, fuel handling area, auxiliary and annex buildings. A gaseous radiation monitor is

located downstream of the exhaust air filtration units in the common ductwork to provide an alarm if abnormal gaseous releases are detected. The plant vent exhaust flow is monitored for gaseous, particulate and iodine releases to the environment. During containment purge, the exhaust air filtration units satisfy 10 CFR 50 Appendix I guidelines (Reference 20) for offsite releases and meets 10 CFR 20 (Reference 21) allowable effluent concentration limits when combined with gaseous releases from other sources. During conditions of abnormal airborne radioactivity in the fuel handling area, auxiliary and/or annex buildings, the filtration units provide filtered exhaust to minimize unfiltered offsite releases.

The size of the containment air filtration system supply and exhaust air lines that penetrate the containment pressure boundary is 36 inches in diameter. Each penetration includes an inboard and outboard branch connection with 16 inch diameter containment isolation valves that are opened when the containment air filtration system is connected to the containment. The ends of the 36 inch containment penetrations are capped for possible future addition of a high volume purge system. In the event of a loss-of-coolant accident (LOCA) while the containment air filtration system is aligned to containment, there will not be a significant release of radioactivity during closure of the 16 inch diameter supply and exhaust valves. The maximum time for valve closure (see Table 6.2.3-1) is consistent with the analysis assumptions for radiological consequences (see Table 15.6.5-2). The closure time is also consistent with the basis (compliance with 10 CFR Part 50.34) for Branch Technical Position CSB 6-4 to Standard Review Plan 6.2.4 (Reference 23) or described in Subsection 6.2.1.5.

The exhaust air containment penetration also includes a containment vessel vacuum relief function to protect the containment from reaching the containment shell design external design pressure. In the event of a LOCA, while these 6-inch motor-operated vacuum relief valves are open, the releases of radioactivity during the maximum time for closure of these valves (see Table 6.2.3-1) have been evaluated. The radiological consequences are bounded by those currently presented in subsection 15.6.5.3. The maximum time for closure of the vacuum relief valves was also evaluated to determine the impact for the calculation of the LOCA minimum backpressure. The methodology depicted in subsection 6.2.1.5 bounds the minimum backpressure calculation.

The exhaust air containment penetrations also serve as a connection for the containment integrated leak rate test system to pressurize and depressurize the containment during integrated leak rate testing. Otherwise, the containment air filtration exhaust subsystem is not involved with the containment integrated leak rate test and is isolated from the containment during this time period.

9.4.7.2.2 Component Description

The containment air filtration system is comprised of the following components. These components are located in buildings on the Seismic Category I Nuclear Island and the Seismic Category II portion of the annex building. The seismic design classification, safety classification and principal construction code for Class A, B, C, or D components are listed in Section 3.2. Table 9.4.7-1 provides design parameters for the major components of the system.

Supply Air Handling Units

Each supply air handling unit consists of a low efficiency filter bank, a high efficiency filter bank, a hot water heating coil bank, a chilled water cooling coil bank and a supply fan.

Exhaust Air Filtration Units

Each exhaust air filtration unit consists of an electric heater, an upstream high efficiency filter bank, a HEPA filter bank, a charcoal adsorber with a downstream postfilter bank, and an exhaust fan. The filtration unit configurations, including housing, internal components, ductwork, dampers, fans, and controls, are designed, constructed, and tested to meet the applicable performance requirements of ASME AG-1, N509, and N510 (References 36, 2, and 3) to satisfy the guidelines of Regulatory Guide 1.140 (Reference 30) except as noted in Appendix 1A. The filtration unit housings maximum leakage rates do not exceed one percent of the design flow in accordance with ASME AG-1. Refer to Table 9.4-1 for a summary of the containment air filtration system filtration efficiencies and Appendix 1A for a comparison of the containment air filtration system exhaust air filtration units with Regulatory Guide 1.140 (Reference 30).

Isolation Dampers

Isolation dampers are bubble tight, single-blade or parallel-blade type. The isolation dampers have spring return actuators which fail closed on loss of electrical power or instrument air. The design and construction of the isolation dampers is in accordance with ANSI/AMCA 500 or ASME AG-1 (References 14 and 36).

Pressure Differential Control Dampers

Pressure differential control dampers utilize opposed-blade type construction and meet the performance requirements of ANSI/AMCA 500 (Reference 14) or ASME AG-1 (Reference 36), Section DA. The dampers maintain a slight negative pressure within the fuel handling building area, with respect to the environment and adjacent non-radiologically controlled plant areas.

Supply and Exhaust Fans

The supply and exhaust air fans are centrifugal type, single width single inlet (SWSI), with high efficiency wheels and backward inclined blades to produce non-overloading horsepower characteristics. Fan performance is rated in accordance with ANSI/AMCA 210 (Reference 4), ANSI/AMCA 211 (Reference 5) and ANSI/AMCA 300 (Reference 6).

Containment Penetrations

The containment penetrations include containment isolation valves, interconnecting piping, and vent and test connections with manual test valves. The containment isolation components that maintain the integrity of the containment pressure boundary after a LOCA are classified as Safety Class B and seismic Category I. Seismic Category I debris screens are mounted on Safety Class C, seismic Category I pipe to prevent entrainment of debris through the supply and exhaust openings that may prevent tight valve shutoff. The screens are designed to withstand post-LOCA pressures.

The vent and purge line containment isolation valves inside and outside the containment have air operators. The valves are designed to fail closed in the event of loss of electrical power or air pressure. These valves are controlled by the protection and plant safety monitoring system as discussed in subsection 7.1.1. The valves shut tight against the containment pressure following a design basis accident.

The motor-operated vacuum relief valves are controlled by the protection and plant safety monitoring system as discussed in subsection 7.1.1. The valves inside containment are self-actuated check valves. These motor-operated valves and check valves shut tight against the containment pressure following a design basis accident.

Ductwork and Accessories

Ductwork, duct supports and accessories are constructed of galvanized steel. Ductwork subject to fan shutoff pressures is structurally designed to accommodate fan shutoff pressures. The system air ductwork inside containment meets seismic Category II criteria so that it will not fall and damage any safety-related equipment following a safe shutdown earthquake. Ductwork, supports and accessories meet the design and construction requirements of SMACNA Rectangular and Round Industrial Duct Construction Standards (References 16 and 34) and SMACNA HVAC Duct Construction Standard - Metal and Flexible (Reference 17). The exhaust air ductwork and supports meet the design and construction requirements of ASME AG-1 (Reference 36), Article SA-4500.

Shutoff and Balancing Dampers

Multiblade, two-position remotely operated shutoff dampers are parallel-blade type. Multiblade, balancing dampers are opposed-blade type. Air handling unit and fan shutoff dampers are designed for maximum fan static pressure at shutoff flow and meet the performance requirements of ANSI/AMCA 500 (Reference 14). The containment exhaust air dampers meet the design and construction criteria of ASME AG-1 (Reference 36), Section DA.

Fire Dampers

Fire dampers are provided where the ductwork penetrates a fire barrier to maintain the fire resistance rating of the fire barriers. The fire dampers meet the design and installation requirements of UL-555 (Reference 15).

Low Efficiency Filters, High Efficiency Filters, and Postfilters

Low and high efficiency filters are rated in accordance with ASHRAE Standard 52 and 126 (References 7 and 35). The minimum average dust spot efficiencies of the filters are shown in Table 9.4.7-1. High efficiency filter performance upstream of HEPA filter banks meet the design requirements of ASME AG-1 (Reference 36), Section FB. Postfilters located downstream of the charcoal adsorbers have a minimum DOP efficiency of 95 percent. The filters meet UL 900 Class I construction criteria (Reference 8).

HEPA Filters

HEPA filters are constructed, qualified, and tested in accordance with ASME AG-1 (Reference 36), Section FC. Each HEPA filter cell is individually shop tested to verify an efficiency of at least 99.97 percent using a monodisperse 0.3-μm aerosol in accordance with ASME AG-1, Section TA.

Charcoal Adsorbers

Each charcoal adsorber is designed constructed, qualified, and tested in accordance with ASME AG-1 (Reference 36), Section FE; and Regulatory Guide 1.40. Each charcoal adsorber is a single assembly with welded construction and 4-inch deep Type III rechargeable adsorber cell, conforming with 1E Bulletin 80-03 (Reference 29).

Electric Heating Coils

The electric heating coils are fin tubular type. The electric heating coils meet the requirements of UL-1995 (Reference 10). The coils are constructed, qualified and tested in accordance with ASME AG-1 (Reference 36), Section CA.

Heating Coils

The heating coils are hot water, finned tubular type. The heating coils are provided with integral face and bypass dampers to prevent freeze damage when modulating the heat output. Coils are performance rated in accordance with ANSI/ARI 410 (Reference 12).

Cooling Coils

The chilled water cooling coils are counterflow, finned tubular type. The cooling coils are designed and rated in accordance with ASHRAE 33 (Reference 11) and ANSI/ARI 410 (Reference 12).

9.4.7.2.3 System Operation

Normal Plant Operation

During normal plant operation, the containment air filtration system operates on a periodic basis to purge the containment atmosphere as determined by the main control room operator to reduce airborne radioactivity or to maintain the containment pressure within its normal operating range. One supply air handling unit provides outdoor air that is filtered, cooled, or heated to the containment areas above the operating floor. The airflow rate is controlled to a constant value by modulating the supply fan inlet vanes to compensate for filter loading or changes in containment pressure. The cooling coils are supplied with chilled water from the central chilled water system (VWS) to cool and/or dehumidify the outside supply air. The heating coils are supplied with hot water by the hot water heating system (VYS). Refer to subsections 9.2.7 and 9.2.10 for descriptions of the central chilled water and hot water heating systems.

The temperature of the air supplied by each air handling unit is controlled by temperature sensors located in the supply air duct. When the supply air temperature is low, the face and bypass dampers across the supply air heating coil are modulated to heat the supply air. When the supply air temperature is high, the flow of chilled water is modulated to cool the supply air. The supply air is continuously monitored by a smoke monitor located in the common ductwork downstream of the supply air handling units.

The airflow rate through the exhaust filters is controlled to a constant value when the exhaust filters are connected to the containment by modulating the exhaust fan inlet vanes to compensate for filter loading or changes in system resistance caused by single or parallel fan operation, or changes in containment pressure. The exhaust lines from the containment include a pair of isolation dampers arranged in parallel to restrict the airflow to maintain the exhaust filter plenums at a negative air pressure when the containment is positively pressurized. Based on predetermined setpoints, the operators select the appropriate damper to open. This prevents exfiltration of unfiltered air from bypassing the filters.

The filtered exhaust air from the containment is discharged to the atmosphere through the plant vent by the exhaust fan. The gaseous effluents in the plant vent are monitored for radioactivity levels before the air is discharged to the environment. Refer to Section 11.5 for a description of the plant vent radiation monitor.

During single subsystem operation, the standby supply and exhaust air units can be started manually by the operator if the operating train fails.

Prior to and during plant shutdown, one or both trains of the containment air filtration system can be operated to remove airborne radioactivity prior to personnel access. During cold ambient conditions, the supply air is heated by the hot water heating system. The exhaust filter unit electric heater controls the relative humidity of the exhaust air entering the charcoal adsorber below 70 percent.

When both trains are operated concurrently, the containment air filtration system provides a maximum airflow rate equivalent to approximately 0.21 air changes per hour.

Abnormal Plant Operation

The containment isolation valves in the supply and exhaust air lines automatically close when containment isolation signals are initiated by the protection and safety monitoring system or diverse actuation system. Refer to subsections 6.2.3, 7.7.1.11 and 7.3 for discussions of the containment isolation system, diverse actuation system and protection and safety monitoring system.

Main control room operators can connect the containment air filtration system to the containment for cleanup of potential airborne radioactivity while the containment remains isolated if a containment high radiation signal is not present.

The containment vacuum relief valves automatically open when containment vacuum relief signals are initiated by the protection and safety monitoring system. These valves automatically close when containment isolation signals are initiated by the protection and safety monitoring

system. Even though these valves are normally closed, they automatically receive a confirmatory close signal if the containment isolation valve inside the reactor containment building is open. As discussed in subsection 7.6.2.4, this interlock verifies availability of engineered safety features for the containment vacuum relief and containment isolation functions.

If high airborne radioactivity or high pressure differential is detected in the fuel handling area, the auxiliary and/or annex buildings, the radiologically controlled area ventilation system isolates the affected area from the outside environment and starts the containment air filtration exhaust subsystem to maintain a slight negative pressure differential in the isolated zone(s). The airflow rate through the exhaust fan is maintained at a constant value by modulating the fan inlet vanes. An outside air makeup damper modulates to control the exhaust airflow rate through the HEPA and charcoal filters to maintain the isolated area(s) at a slightly negative pressure relative to the clean areas. The containment air filtration system is automatically isolated from the containment, if purging is in progress and the standby exhaust filter train does not start. If both exhaust trains are connected to the containment, one exhaust train is automatically isolated from the containment and realigned to the isolated area(s). The exhaust subsystem can be manually connected to the onsite diesel generators if there is a loss of ac power.

The containment air filtration system is not required to mitigate the consequences of a design basis fuel handling accident or a loss of coolant accident. If the exhaust air filtration units are operational and ac power is available, they may be used to support post-event recovery operations. The plant vent high range radiation detectors monitor effluents discharged into the plant vent.

If smoke is detected in the common supply air duct, an alarm is initiated. The system remains in operation unless plant operators determine that there is a need to manually shut down the supply air handling units. Fire dampers are provided for HVAC ductwork that passes through a fire barrier in order to isolate each fire zone in the event of a fire.

9.4.7.3 Safety Evaluation

The containment air filtration system has the safety-related functions of containment isolation and vacuum relief. The containment isolation function is evaluated in subsection 6.2.3. The vacuum relief system consists of redundant relief devices inside and outside containment. Two independent lines with an automatic isolation valve are provided on the positive pressure side of the system along with two independent lines with a check valve on the negative pressure side of the system penetrate containment. The lines share a common containment penetration. Therefore, there are no single active failures, which would prevent the system from performing its function.

The failure of equipment and ductwork will not reduce the functioning of safety-related systems, structures or components that are required to close to maintain containment isolation integrity after a design basis accident or those components required to function for vacuum relief. Ductwork that is located inside containment whose failure may affect any safety-related equipment is designed to seismic Category II requirements.

9.4.7.4 Tests and Inspections

The containment air filtration system is designed to permit periodic inspection of system components. Each component is inspected prior to installation. Components of each system are accessible for periodic inspection during normal plant operation. The exhaust subsystem is balanced to provide airflow in accordance with the guidelines of ASME N510 (Reference 3). The supply air subsystem airflow rate is measured and balanced in accordance with the guidelines of SMACNA HVAC Systems – Testing, Adjusting and Balancing (Reference 19). Instruments are calibrated during testing. Automatic controls are tested for actuation at the proper setpoints. Alarm functions are checked for operability.

The tests and inspections of the containment isolation valves associated with the containment air filtration system are discussed in subsections 6.2.3 and 6.2.5.

HEPA filters and charcoal adsorbers are tested in place in accordance with ASME N510 to verify that these components do not exceed a maximum allowable bypass leakage. Samples of charcoal adsorbent are periodically tested to verify a minimum charcoal efficiency of 90 percent in accordance with Regulatory Guide 1.140 (Reference 30) except that test procedures and test frequency are conducted in accordance with ASME N510.

The exhaust ductwork and filter plenums are tested in place for leak tightness in accordance with ASME N510, Section 6.

9.4.7.5 Instrumentation Application

The containment air filtration system operation is controlled by the plant control system (PLS) except for the containment isolation valves which are controlled by the protection and safety monitoring system (PMS) and diverse actuation system (DAS). Refer to subsection 7.1.1 for a discussion of the plant control system, protection and safety monitoring system, and diverse actuation system. Automatic protection and safety monitoring system actuations of these valves are discussed in Section 7.3; the diverse actuation system signals are discussed in subsection 7.7.1.11. Display and monitoring of system instrumentation is consistent with the requirements of Table 4-2 of ASME N509 (Reference 2).

Temperature controllers maintain the proper supply air temperature. Temperature indication and alarms are provided to inform operators of abnormal temperature conditions for supply air and charcoal adsorbers.

Pressure differential indication and alarms are provided to inform plant operators when air filter changeout is necessary.

Status indication and alarms are provided to monitor operation of fans, controlled dampers and controlled valves. Fans can be placed into operation or shut down from the main control room.

Relative humidity indication and an alarm are provided to monitor the relative humidity of the air upstream of the containment air filtration exhaust air charcoal adsorbers.

Radioactivity indication and alarms are provided to inform the main control room operators of the concentration of gaseous radioactivity in the containment air filtration system exhaust duct and gaseous, particulate and iodine concentrations in the plant vent. See Section 11.5 for a description of these radiation monitors.

Flow indication and alarms are provided to alert plant operators to equipment malfunctions.

9.4.8 Radwaste Building HVAC System

The radwaste building HVAC system serves the radwaste building which includes the clean electrical/mechanical equipment room and the potentially contaminated HVAC equipment room, the packaged waste storage room, the waste accumulation room, and the mobile systems facility.

9.4.8.1 Design Basis

9.4.8.1.1 Safety Design Basis

The radwaste building HVAC system serves no safety-related function and therefore has no nuclear safety design basis. The system is nonseismic.

9.4.8.1.2 Power Generation Design Basis

The radwaste building HVAC system provides the following functions:

- Provide conditioned air to work areas to maintain acceptable temperatures for equipment and personnel working in the areas
- Provide confidence that air movement is from clean to potentially contaminated areas to minimize the spread of airborne contaminants
- Collect the vented discharges from potentially contaminated equipment
- Provide for radiation monitoring of exhaust air prior to release to the environment
- Maintain the radwaste building at a negative pressure with respect to ambient to prevent unmonitored releases from the radwaste building

The system maintains the following temperature based on maximum and minimum normal outdoor air temperature conditions shown below in Chapter 2, Table 2-1:

Room or Area	Temperatures (°F)
Processing areas and storage areas	50-105
Mechanical and electrical equipment rooms	50-105
Truck staging area	50-105

9.4.8.2 System Description

The radwaste building HVAC system is shown in Figure 9.4.8-1.

9.4.8.2.1 General Description

The radwaste building HVAC system is a once-through ventilation system that consists of two integrated subsystems: the radwaste building supply air system and the radwaste building exhaust air system. The systems operate in conjunction with each other to maintain temperatures in the areas served while controlling air flow paths and building negative pressure.

The supply air system consists of two 50 percent capacity air handling units of about 9,000 scfm each with a ducted air distribution system, automatic controls, and accessories. The air handling units are located in an electrical/mechanical equipment room on elevation 100′-0″ on the southwest side of the building. Each unit draws 100 percent outdoor air through individual louvered outdoor air intakes. The two units discharge into a common duct distribution system which is routed through the building. Branch connections from the main duct supply air through registers into the various areas served.

The exhaust air system consists of two 50 percent capacity exhaust centrifugal fans sized to allow the system to maintain a negative pressure, an exhaust air duct collection system, and automatic controls and accessories. The airflow rates are balanced to maintain a constant exhaust design air flow through the fans. The exhaust fans are located in an equipment room on Elevation 100′-0″ in the northwest corner of the radwaste building.

The exhaust fans discharge to a common duct which is routed to the plant vent. A radiation monitor records activity in the discharge duct and activates an alarm in the main control room when excess activity in the effluent discharge is detected. The radiation monitoring system is described in Section 11.5.

The exhaust air collection duct inside the radwaste building exhausts air from areas and rooms where low levels of airborne contamination may be present. Exhaust connection points are provided to allow the direct exhaust of equipment located on the mobile systems. Where potential for significant airborne release exists, mobile systems include HEPA filtration. Back draft dampers are provided at each mobile system connection to prevent blowback through the equipment in the event of exhaust system trip. Criteria for mobile processing systems are included in Sections 11.2 and 11.4.

9.4.8.2.2 Component Description

The radwaste building HVAC system is comprised of the following major components. These components are located in the non-seismic radwaste building.

Supply Air Handling Units

Each air handling unit consists of a plenum section, a low efficiency filter bank, a high efficiency filter bank, a hot water heating coil, a chilled water cooling coil bank, and a supply fan with automatic inlet vanes.

Supply and Exhaust Air Fans

The supply and exhaust fans are centrifugal type, single width single inlet (SWSI) or double width double inlet (DWDI), with high efficiency wheels and backward inclined blades to produce non-overloading horsepower characteristics. The fans are designed and rated in accordance with ANSI/AMCA 210 (Reference 4), ANSI/AMCA 211 (Reference 5), and ANSI/AMCA 300 (Reference 6).

Low Efficiency Filters and High Efficiency Filters

The low efficiency (25 percent) filters and high efficiency (80 percent) filters have a rated dust spot efficiency based on ASHRAE 52 and 126 (References 7 and 35). The filters meet UL 900 (Reference 8) Class I construction criteria.

Hot Water Unit Heaters

The hot water unit heaters consist of a fan section and hot water heating coil section factory assembled as a complete and integral unit. The unit heaters are either horizontal discharge or vertical downblast type. The coil ratings are in accordance with ANSI/ARI 410 (Reference 12).

Cooling Coils

The chilled water cooling coils are counterflow, finned tubular type. The cooling coils are designed and rated in accordance with ASHRAE 33 (Reference 11) and ANSI/ARI 410 (Reference 12).

Heating Coils

The hot water heating coils are counterflow, finned tubular type. The heating coils are provided with integral face and bypass dampers to prevent freeze damage when modulating the heat output. The heating coils are designed and rated in accordance with ASHRAE 33 (Reference 11) and ANSI/ARI 410 (Reference 12).

Shutoff, Control, Balancing, and Backdraft Dampers

Multiblade, two-position remotely operated shutoff dampers are parallel-blade type. Multiblade, control and balancing dampers are opposed-blade type. Backdraft dampers are provided to prevent backflow through exhaust connections for mobile systems. Air handling unit and fan shutoff dampers are designed for maximum fan static pressure at shutoff flow. Dampers meet the performance requirements of ANSI/AMCA 500 (Reference 14).

Fire Dampers

Fire dampers are provided at duct penetrations through fire barriers to maintain the fire resistance ratings of the barriers. The fire dampers meet the design and installation requirements of UL 555 (Reference 15).

Ductwork and Accessories

Ductwork, duct supports and accessories are constructed of galvanized steel. Ductwork subject to fan shutoff pressure is structurally designed for fan shutoff pressures. Ductwork, supports and accessories meet the design and construction requirements of SMACNA Rectangular and Round Industrial Duct Construction Standards (References 16 and 34) and SMACNA HVAC Duct Construction Standards - Metal and Flexible (Reference 17).

9.4.8.2.3 System Operation

Normal Plant Operation

During normal operation, both supply air handling units and both exhaust fans operate continuously to maintain suitable temperatures in the radwaste building. The radwaste building supply air flow through the inlet vanes of the supply fans is modulated automatically by the differential pressure controllers to maintain the building at a negative pressure relative to the outdoors. Sensors for the controllers are mounted in the general building area. Other sensors are mounted outdoors shielded from the effects of wind. Electric interlocks between the truck access doors and the supply fan flow controller permits the supply air to drop to 6000 cfm below the exhaust flow when any truck bay door is open. This creates a flow into the building through the open door.

The temperature of the air supplied by the air handling unit is controlled by separate heating and cooling controllers, with sensors in the general building area. The cooling controllers modulate the control valves in the chilled water supply lines to the air handling units. The heating controllers modulate the face and bypass dampers of the hot water heating coils in the air handling units.

Differential pressure drop across the supply units filter banks is monitored, and individual alarms are actuated when any pressure drop rises to a predetermined level indicative of the need for filter replacement. To replace the filters on a supply unit, the affected supply fan and exhaust fan are stopped and isolated from the duct system by means of isolation dampers. During filter replacement, the supply and exhaust systems operate at 50 percent capacity. In this mode of operation, radwaste processing operations are adjusted to obtain acceptable temperature in the radwaste building.

The hot water unit heaters in the mobile systems facility and truck staging area are not normally required to operate to maintain the general building temperature. These heaters operate, in response to local thermostat control, to temper air entering the building when a truck access door is opened.

The hot water unit heater in the electrical/mechanical room operates in response to local thermostat control to maintain the required minimum temperature.

Abnormal Plant Operation

The radwaste building HVAC system is not required to operate during any abnormal plant condition.

9.4.8.3 Safety Evaluation

The radwaste building HVAC system has no safety-related function and therefore requires no nuclear safety evaluation.

9.4.8.4 Tests and Inspections

The radwaste building HVAC system is designed to permit periodic inspection of system components. Each component is inspected prior to installation. Components of each system are accessible for periodic inspection during normal plant operation. A system air balance test and adjustment to design conditions is conducted in the course of the plant preoperational test program. Air flow rates are measured and balanced in accordance with the guidelines of SMACNA HVAC systems - Testing, Adjusting and Balancing (Reference 19). Instruments are calibrated during testing. Automatic controls are tested for actuation at the proper setpoints. Alarm functions are checked for operability.

9.4.8.5 Instrumentation Applications

The radwaste building HVAC system operation is controlled by the plant control system (PLS). Refer to subsection 7.1.1 for a discussion of the plant control system.

Temperature controllers and thermostats maintain the proper space temperatures. Supply air temperature is controlled by sensing the temperature in the mobile systems facility and the electrical/mechanical equipment room. Unit heaters are controlled by local thermostats. Temperature indication and alarms are accessible locally via the plant control system.

Temperature is indicated for each air handling unit supply air discharge duct.

Operational status of fans is indicated in the main control room. The fans and air handling units can be placed into operation or shutdown from the main control room.

Differential pressure indication is provided for each of the filters in the air handling units and an alarm for high pressure drop is provided for each air handling unit.

Airflow is indicated for the air handling unit and exhaust fan discharge ducts. Alarms are provided for low air flow rates in the fan discharge ducts.

An alarm is provided for high radiation in the main exhaust duct to the vent stack.

An alarm is provided for smoke in the common discharge duct from the supply air handling units.

Position indicating lights are provided for automatic dampers.

9.4.9 Turbine Building Ventilation System

The turbine building ventilation system (VTS) operates during startup, shutdown, and normal plant operations. The system maintains acceptable air temperatures in the turbine building for equipment operation and for personnel working in the building.

9.4.9.1 Design Basis

9.4.9.1.1 Safety Design Basis

The turbine building ventilation system serves no safety-related function and therefore has no nuclear safety design basis. The system is nonseismic.

9.4.9.1.2 Power Generation Design Basis

The turbine building ventilation system provides the following functions:

- Maintains acceptable temperatures for equipment operation
- Provides for removal of chemical fumes from the secondary sampling laboratory room, flammable vapors from the lube oil reservoir room and the clean and dirty lube oil storage room, and vitiated air from the toilets
- Provides conditioning air to maintain acceptable temperatures for electrical equipment rooms and personnel work areas
- Maintains the following temperatures based on the ambient outside air[1]:
  - General area (operating deck, intermediate levels, and base slab) .....50-105°F
  - Fire pump room (motor driven).....50-105°F
  - Electrical equipment rooms (switchgear room 1, switchgear room 2, and electrical equipment room).....50-105°F
  - Personnel work areas (Secondary sampling laboratory, office space at elevation 149-′0″ and 174′-1 1/2″) .....73-78°F
  - South bay equipment areas (various pumps and RCP variable speed drive power converter units.....50-100°F

9.4.9.2 System Description

The turbine building ventilation system consists of the following subsystems:

- General area heating, south bay equipment, and ventilation
- Electrical equipment and personnel work area HVAC
- Local area heating and ventilation
  - Lube oil reservoir room ventilation
  - Clean and dirty lube oil storage room ventilation
  - Motor-driven fire pump room heating and ventilation
  - Toilet area ventilation

1. Temperature conditions of 95°F DB/77°F WB (coincident), 79°F WB (non-coincident) in summer and -5°F in winter.

The turbine building HVAC system general area subsystem is shown in Figure 9.4.9-1.

9.4.9.2.1 General Description

9.4.9.2.1.1 General Area Heating and Ventilation

Most of the turbine building is supplied by the general area ventilation and heating subsystem. Air is exhausted from the turbine building to the atmosphere by roof exhaust ventilators. The roof exhaust ventilators pull in outside air through wall louvers located at elevations 100′-0″, 117′-6″, and 135′-3″. Wall louvers are located at the operating deck to provide additional air during plant outage operations. The general area heating subsystem uses hot water unit heaters to provide local heating throughout the turbine building. During heating operation, the general area ventilation system is not operated.

9.4.9.2.1.2 Electrical Equipment and Personnel Work Area HVAC

The electrical equipment, south bay equipment, and personnel work area air conditioning subsystem serves electrical equipment areas (switchgear rooms and the electrical equipment room), the south bay equipment (CCS pumps, BDS pumps, and reactor coolant pumps variable frequency drive power converter areas), and personnel work areas (secondary sampling laboratory, office space at elevation 149 and 174′). This subsystem is subdivided into three independent HVAC systems, one serving the electrical equipment areas, one serving the south bay equipment, and one serving the personnel work areas.

The electrical equipment HVAC system consists of two 50 percent capacity air handling units with a supply fan and a return air fan of about 16,500 scfm each, a ducted supply and return air system, automatic controls, and accessories. The air handling units are located on elevation 149′-0″ of the turbine building. The temperature of the rooms is maintained by thermostats which control the chilled water control valves for cooling and the integral face/bypass dampers for heating. Outside air is mixed with recirculated air to maintain a positive pressure.

The south bay equipment area HVAC system consists of two 50-percent capacity air handling units of about 7000 cfm capacity each. The air handling units are located on elevation 117 -6″ of the turbine building between column lines 11 and 11.2. The temperature of the room is maintained by thermostats that control the chilled water control valves for cooling and the integral face bypass dampers for heating. Outside air is mixed with the recirculation air to maintain a positive pressure.

The personnel work area HVAC system consists of two 50 percent capacity air handling units of about 4,500 scfm each, a ducted supply and return air system, automatic controls, and accessories. The air handling units are located on elevation 100′-0″ of the turbine building. The temperature of the rooms is maintained by thermostats which control the chilled water control valves for cooling and the integral face/bypass dampers for heating. Electric reheat coils are provided in the ductwork to each room to maintain close temperature control. Outside air is mixed with recirculated air to maintain a positive pressure.

9.4.9.2.1.3 Local Area Heating and Ventilation

The lube oil reservoir room, clean and dirty lube oil storage room, toilet areas (facilities), and secondary sampling laboratory fume hood have centrifugal exhaust fans to remove flammable vapors, odors, or chemical fumes as required.

The motor-driven fire pump room has an exhaust ventilator to remove heat generated by the fire pump. Air is pulled from the general area of the turbine building through wall fire damper openings in the room and is exhausted outside of the turbine building to the atmosphere. The motor-driven fire pump room is heated by a hot water unit heater to provide freeze protection for the fire pump.

9.4.9.2.2 Component Description

The turbine building ventilation system is comprised of the following major components. These components are located in the non-seismic turbine building.

HVAC Air Handling Units

Each air handling unit is a horizontal draw-through cabinet type consisting of a mixing box section, low efficiency (25 percent) filter, high efficiency (80 percent) filter, integral face/ bypass damper, hot water heating coil, chilled water cooling coil. The electrical equipment room air handling units include a return air fan and a supply fan. The personnel area and south bay equipment area air handling units include a supply air fan.

Low Efficiency Filters and High Efficiency Filters

The efficiency (25 percent) filters and high efficiency (80 percent) filters have a rated dust spot efficiency based on ASHRAE 52 and 126 (References 7 and 35). The filters meet UL 900 (Reference 8) Class I construction criteria.

Exhaust Ventilators

The turbine building roof exhaust ventilators are hooded, direct driven, propeller type with pneumatic operated backdraft damper. The ventilator in the fire pump room is a smaller, two-speed, propeller type with a pneumatically actuated backdraft damper. Ventilators in the lube oil rooms and restrooms are centrifugal type. The exhaust ventilators are built to the manufacturer's standards.

Shutoff, Control, Balancing, and Backdraft Dampers

Multiblade, two-position remotely operated shutoff dampers are parallel-blade type. Multiblade, control and balancing dampers are opposed-blade type. Backdraft dampers are provided to prevent backflow through shut down fans. Air handling unit and fan shutoff dampers are designed for maximum fan static pressure at shutoff flow. Dampers meet the performance requirements of ANSI/AMCA 500 (Reference 14).

Unit Heaters

Unit heaters are the down-blow type with propeller type fans directly connected to the fan motor. Each unit heater is equipped with a four-way discharge outlet. The coil ratings are in accordance with ANSI/ARI 410 (Reference 12).

Electric Duct Heaters

Electric duct heaters are open grid type. The duct heaters are UL-listed for zero clearance and meet requirements of NFPA 70 (Reference 28).

Humidifiers

A humidifier is a packaged electric steam generator type which converts water to steam and distributes it through the air handling system. The humidifier is designed and rated in accordance with ARI 640 (Reference 13).

Fire Dampers

Fire dampers are provided at HVAC duct penetrations through fire barriers to maintain fire resistance ratings of the barriers. The fire dampers meet the design and installation requirements of UL-555 (Reference 15) as applicable.

Ductwork and Accessories

Ductwork, duct supports, and accessories are constructed of galvanized steel. Ductwork subject to fan shutoff pressure is structurally designed for fan shutoff pressures. Ductwork, supports and accessories meet the design and construction requirements of SMACNA Rectangular and Round Industrial Duct Construction Standards (References 16 and 34) and SMACNA HVAC Duct Construction Standards - Metal and Flexible (Reference 17).

9.4.9.3 System Operation

9.4.9.3.1 General Area Heating and Ventilation

The general area ventilation system is manually controlled. Roof exhaust ventilators are manually started and stopped as required to satisfy space temperature conditions. Wall louvers located at the ground floor and the two intermediate levels of the turbine building are normally open during ventilation operation. The wall louvers located at the operating floor are manually opened to increase ventilation air to the area during outage operations. The operating floor louvers normally remain closed during power operation.

Hot water unit heaters are controlled automatically or manually. In the automatic mode, the heater fan motors are thermostatically controlled by their respective space thermostats. The plant hot water heating system (VYS) supplies hot water to the unit heaters.

9.4.9.3.2 Electrical Equipment, South Bay Equipment, and Personnel Work Area HVAC

During normal operation, the four air handling units of the electrical equipment and south bay equipment area HVAC systems operate continuously and the two air handling units of the personnel work area HVAC system operate continuously. The chilled water coils are supplied from the plant central chilled water system (VWS) and the hot water coils are supplied from the plant central hot water heating system.

9.4.9.3.3 Local Area Heating and Ventilation

The ventilation operation for the lube oil reservoir room and the clean and dirty lube oil storage room is similar. Each centrifugal exhaust fan runs continuously to prevent the accumulation of chemical fumes or flammable vapors in its respective room.

The ventilation operation for the motor-driven fire pump room is a directly driven, two-speed wall exhaust ventilator that is automatically or manually controlled. In the automatic mode, the exhaust ventilator motor is thermostatically controlled by a two-stage room thermostat. In the manual mode the exhaust ventilator runs continuously at high speed until it is manually stopped.

To provide heating of the motor driven fire pump room, a hot water unit heater fan motor is controlled by a space thermostat in the automatic mode, or the heater fans run continuously in the manual mode. The plant hot water heating system supplies hot water to the unit heater.

The toilet area exhaust fans run continuously.

9.4.9.4 Safety Evaluation

The turbine building ventilation system has no safety-related function and therefore requires no nuclear safety evaluation.

There is no safety-related equipment in the turbine building.

9.4.9.5 Tests and Inspections

The turbine building ventilation system is designed to permit periodic inspection of system components during normal plant operation. System air balance testing and adjustments for the electrical equipment and personnel work areas are conducted in accordance with SMACNA (Reference 19).

Fans are factory tested and rated in accordance with ANSI/AMCA 210 (Reference 4). Water coils are factory tested and rated in accordance with ANSI/ARI 410 (Reference 12).

Ductwork is leak tested in accordance with SMACNA (Reference 18).

9.4.9.6 Instrumentation Applications

The turbine building ventilation system is controlled by the plant control system.

Temperature indication and controllers control the room air temperatures within a predetermined range.

Temperature indication is provided to allow surveillance of room and space temperatures in the turbine building.

Differential pressure indication is provided for the air filters in each air handling unit. Alarms are provided for high pressure drops across the air filters.

9.4.10 Diesel Generator Building Heating and Ventilation System

The diesel generator building heating and ventilation system serves the standby diesel generator rooms, electrical equipment service modules, and diesel fuel oil day tank vaults in the diesel generator building and the two diesel oil transfer modules located in the yard near the fuel oil storage tanks. Local area heating and ventilation equipment is used to condition the air to the stairwell and security room.

9.4.10.1 Design Basis

9.4.10.1.1 Safety Design Basis

The diesel generator building heating and ventilation system serves no safety-related function and therefore has no nuclear safety design basis. The system is nonseismic.

9.4.10.1.2 Power Generation Design Basis

The diesel generator building heating and ventilation system provides the following functions:

- Provides sufficient quantities of ventilation air to maintain acceptable temperatures within the generator rooms for equipment operation and reliability during periods of diesel generator operation in order for the onsite standby power system to perform its defense in depth functions

- Provides adequate heating and ventilation for suitable environmental conditions for maintenance personnel working in the diesel generator room when the generators are not in operation

- Provides suitable environmental conditions for equipment operation in each diesel generator electrical equipment service module under the various modes of diesel generator operation

- Prevents the accumulation of combustible vapors and dissipate their concentration in the fuel oil day tank vault

- Provides adequate heating and ventilation to maintain acceptable temperature within the diesel oil transfer module enclosures

The system maintains the following room temperatures based on ambient outside air temperature conditions of 95°F (summer) and -5°F (winter):

Area	Design Minimum (°F)	Temperature Maximum (°F)
Diesel Generator Area		
Diesel Generator On	None	130
Diesel Generator Off	50	105
Service Module		
Diesel Generator On	50	105
Diesel Generator Off	50	105
Diesel Oil Transfer Module Enclosure	50	105
Stairwell	50	95
Security Room	73	78

9.4.10.2 System Description

The diesel generator building heating and ventilation system is shown in Figure 9.4.10-1.

The system consists of the following subsystems:

- Normal heating and ventilation subsystem
- Standby exhaust ventilation subsystem
- Fuel oil day tank vault exhaust subsystem
- Diesel oil transfer module enclosures ventilation and heating subsystem

9.4.10.2.1 General Description

9.4.10.2.1.1 Normal Heating and Ventilation System

The normal heating and ventilation subsystem serves the diesel generator building. Each diesel generator train is provided with independent ventilation and heating equipment for the building areas serving that diesel generator train.

Each normal heating and ventilation subsystem for a diesel generator train consists of one 100 percent capacity engine room air handling unit which ventilates the diesel generator room, one 100 percent capacity service module air handling unit which ventilates the electrical equipment service module, an exhaust system for the fuel oil storage vault and electric unit heaters in the diesel generator area. Air intake louvers for these units are located as high in the diesel generator building wall as possible.

The engine room air handling units are located above the electrical equipment service module with supply and return ducts in the diesel generator room.

The service module air handling units are located above the service module with supply and return ducts into the module.

Electric unit heaters are provided in the diesel generator room to maintain the space at a minimum temperature of 50°F when the diesel generators are off.

Electric unit heaters are provided in the diesel generator stairwell and security room to maintain the space at a minimum temperature.

9.4.10.2.1.2 Standby Exhaust Ventilation Subsystem

The standby exhaust ventilation subsystem for each diesel generator room consists of two 50 percent capacity roof mounted exhaust fans and motor operated air intake dampers mounted in the exterior walls of the room.

9.4.10.2.1.3 Fuel Oil Day Tank Vault Exhaust Subsystem

Each fuel oil day tank vault is continuously ventilated by a centrifugal exhaust fan. The exhaust fans are mounted on the roof of the vault and ducted to draw air from one foot above the vault floor and from above the oil containment dike to remove any oil fumes generated in the space. Air is drawn into the vault from the diesel generator room through an opening protected with a fire damper.

9.4.10.2.1.4 Diesel Oil Transfer Module Enclosures Ventilation and Heating Subsystem

Each diesel oil transfer module enclosure is ventilated by a roof mounted exhaust fan. Outside air is drawn into the enclosure through manually operated louvered air intakes. The louvers are closed for winter operation when heating is required. An electric unit heater is provided in each enclosure to maintain the space at a minimum temperature of 50°F.

9.4.10.2.2 Component Description

The diesel generator building heating and ventilation system is comprised of the following major components. These components are located in the non-seismic diesel-generator building. The seismic design classification, safety classification and principal construction code for Class A, B, C, or D components are listed in Section 3.2. Tables 9.4.10-1 through 9.4.10-4 provide design parameters for major components in the system.

Supply Air Handling Units

Each air handling unit consists of a mixing box section, a low efficiency filter bank, a high efficiency filter bank, and a supply fan. Electric heating coils are provided for the service module air handling units for module heating.

Supply and Exhaust Air Fans

The supply and exhaust fans are centrifugal type, single width single inlet (SWSI) or double width double inlet (DWDI), with high efficiency wheels and backward inclined blades to produce non-overloading horsepower characteristics. The fans are designed and rated in accordance with ANSI/AMCA 210 (Reference 4), ANSI/AMCA 211 (Reference 5), and ANSI/AMCA 300 (Reference 6).

Low Efficiency Filters and High Efficiency Filters

The low efficiency filters and high efficiency filters have a rated dust spot efficiency based on ASHRAE 52 and 126 (References 7 and 35). Filter minimum average dust spot efficiency is shown in Table 9.4.10-1. The filters meet UL 900 (Reference 8) Class I construction criteria.

Electric Heating Coils

The electric heating coils are multi-stage fin tabular type. The electric heating coils meet the requirements of UL 1995 (Reference 10).

Roof Exhaust Fans

The standby exhaust fans are roof mounted, direct drive upblast ventilators. The fans are equipped with gravity dampers that open when the fan operates and close when the fan is shut down. The diesel oil transfer module enclosure exhaust fans are direct driven centrifugal fan roof ventilators. The ventilators are equipped with gravity dampers that open when the fan operates and close when the fan is shut down.

Electric Unit Heaters

The electric unit heaters are single-stage or two-stage fin tubular type. The electric unit heaters are UL-listed and meet the requirements of UL 1996 (Reference 26) and the National Electric Code (Reference 28).

Shutoff, Control, Balancing, and Backdraft Dampers

Multiblade, two-position shutoff remotely operated dampers are parallel-blade type. Multiblade, control and balancing dampers are opposed-blade type. Backdraft dampers are provided to prevent backflow through shut down exhaust fans and to relieve pressure from the service module and diesel generator building. Dampers meet the performance requirements of ANSI/AMCA 500 (Reference 14).

Fire Dampers

Fire dampers are provided at duct penetrations through fire barriers to maintain the fire resistance ratings of the barriers. The fire dampers meet the design and installation requirements of UL 555 (Reference 15).

Ductwork and Accessories

Ductwork, duct supports and accessories are constructed of galvanized steel. Ductwork subject to fan shutoff pressure is structurally designed for fan shutoff pressures. Ductwork, supports and accessories meet the design and construction requirements of SMACNA Rectangular and Round Industrial Duct Construction Standards (References 16 and 34) and SMACNA HVAC Duct Construction Standards - Metal and Flexible (Reference 17).

9.4.10.2.3 System Operation

9.4.10.2.3.1 Normal Heating and Ventilation Subsystem

Normal Plant Operation

During normal plant operation, each engine room air handling unit operates continuously when the diesel generator is not operating and outdoor air is required for room cooling. Each air handling unit has 100 percent cooling capacity for the engine room served by the unit. The engine room air handling unit is not required to operate when the diesel generator in the engine room served operates. The unit draws outdoor air through a louvered air intake and mixes it with return air from the engine room in required proportion to satisfy a thermostat located in the space served. Excess outside air supplied to the engine room is discharged to outdoors via a gravity relief damper.

Each service module air handling unit operates continuously, providing 100 percent cooling and heating capacity for the service module served by the unit. The unit draws outside air through a louvered air intake and mixes it with return air from the service module in required proportion to satisfy a space thermostat located in the service module. Excess outside air supplied to the service module flows into the diesel engine area via a wall mounted relief damper. The electric heating coil in the service module air handling unit is controlled by a separate space thermostat. The service module air handling unit operates continuously regardless of diesel generator status.

The engine room electric unit heaters operate as required to maintain the minimum room temperature when the diesel generators are not operating. No specific minimum room temperature is maintained when the diesel generators operate. Local space thermostats turn the unit heaters on and off as required for temperature control.

The stairwell and security room electric unit heaters operate as required to maintain the minimum room temperature. Local space thermostats turn the unit heaters on and off as required for temperature control.

Abnormal Plant Operation

The engine room air handling units and unit heaters are not required to operate during any abnormal plant condition. This equipment is not required to operate when the diesel generators operate.

The service module air handling units operate continuously during normal plant operation or when the diesel generators operate during a loss of the plant ac electrical system.

9.4.10.2.3.2 Standby Exhaust Ventilation Subsystem

Normal Plant Operation

During normal plant operation, the standby exhaust fans operate in conjunction with the diesel generators. Each exhaust fan has 50 percent cooling capacity for the engine room served by the fan. The fans for an engine room start when the diesel generator in that room is started. The fans shut down when the diesel generator is stopped and the engine room temperature satisfies the standby exhaust fan temperature controllers. One or both standby exhaust fans are required to operate to maintain the engine room temperature depending on the outdoor ambient temperature.

The motor operated air intake dampers automatically open when the fans start and close when both fans shut down.

The standby exhaust ventilation system is not required to operate when the diesel generators are not operating.

Abnormal Plant Operation

The standby exhaust ventilation system is required to operate to support diesel generator operation during loss of offsite power. System operation is identical to that for normal plant operation.

9.4.10.2.3.3 Fuel Oil Day Tank Vault Exhaust Subsystem

Normal Plant Operation

During normal plant operation, each fuel oil day tank vault exhaust fan operates continuously. The fans are manually started and shut down. Each exhaust fan has 100 percent capacity for ventilation of the day tank vault served by the fan.

Abnormal Plant Operation

The fuel oil day tank vault exhaust subsystem is not required to operate during any abnormal plant condition.

9.4.10.2.3.4 Diesel Oil Transfer Module Enclosures Ventilation and Heating Subsystem

Normal Plant Operation

During normal plant operation, each diesel oil transfer module enclosure exhaust fan operates during warm outdoor ambient conditions under control of a temperature controller to maintain the enclosure below the maximum indoor design temperature. The unit heaters operate as required during the winter to maintain the minimum design enclosure temperature. The operable outside air intake louvers are manually opened for the cooling season and manually set closed during the winter heating season.

Abnormal Plant Operation

The diesel oil transfer module enclosure ventilation and heating subsystem is required to operate to support diesel generator operation during loss of the plant ac electrical system. System operation is identical to that for normal plant operation.

9.4.10.3 Safety Evaluation

The diesel generator building heating and ventilation system has no safety-related function and therefore requires no nuclear safety evaluation.

9.4.10.4 Tests and Inspection

The diesel generator building heating and ventilation system is designed to permit periodic inspection of system components. Each component is inspected prior to installation. Components of each system are accessible for periodic inspection during normal plant operation. A system air balance test and adjustment to design conditions is conducted in the course of the plant preoperational test program. Air flow rates are measured and balanced in accordance with the guidelines of SMACNA HVAC Systems - Testing, Adjusting, and Balancing (Reference 19). Instruments are calibrated during testing. Automatic controls are tested for actuation at the proper setpoints. Alarm functions are checked for operability.

9.4.10.5 Instrumentation Applications

The diesel generator building heating and ventilation system operation is controlled by the plant control system. Refer to subsection 7.1.1 for a discussion of the plant control system.

Temperature controllers and thermostats maintain the proper space temperatures. Temperature indication and alarms are accessible locally via the plant control system.

Operational status of fans is indicated in the main control room. All fans and air handling units can be placed into operation or shutdown from the main control room or locally.

Differential pressure indication is provided for each of the filters in the air handling units and an alarm for high pressure drop is provided for each air handling unit.

9.4.11 Health Physics and Hot Machine Shop HVAC System

The health physics and hot machine shop HVAC system serves the annex building stairwell, S02; the personnel decontamination area, frisking and monitoring facilities, containment access corridor, and health physics facilities on the 100′-0″ elevation of the annex building and the hot machine shop on the 107′-2″ elevation of the annex building.

9.4.11.1 Design Basis

9.4.11.1.1 Safety Design Basis

The health physics and hot machine shop HVAC system serves no safety-related function and therefore has no nuclear safety design basis. The system is nonseismic.

9.4.11.1.2 Power Generation Design Basis

The health physics and hot machine shop HVAC system provides the following functions:

- Provides conditioned air to work areas to maintain acceptable temperatures for equipment and personnel working in the areas
- Provides air movement from clean to potentially contaminated areas to minimize the spread of airborne contaminants
- Collects the vented discharges from potentially contaminated equipment in the area
- Provides for exhaust from welding booths, grinders and other miscellaneous equipment located in the hot machine shop
- Provides for radiation monitoring of exhaust air prior to release to the environment
- Maintains the access control area and hot machine shop at a slight negative pressure with respect to outdoors and the clean areas of the annex building to prevent unmonitored releases of radioactive contaminants
- Provides humidification to maintain a minimum of 35 percent relative humidity

The system maintains the following temperatures based on maximum and minimum normal outside air temperature conditions shown in Chapter 2, Table 2-1:

Room or Area	Temperatures (°F)
Health physics area	73-78
Hot machine shop	65-85
Security room	73-78
Elevator machine room and stairwell	65-95

9.4.11.2 System Description

The health physics and hot machine shop HVAC system is shown in Figure 9.4.11-1.

9.4.11.2.1 General Description

The health physics and hot machine shop HVAC system is a once-through ventilation system consisting of two integrated subsystems: a supply air system and an exhaust air system. The systems operate in conjunction with each other to satisfy the functional requirements of maintaining temperatures in the areas served while controlling air flow paths and area negative pressure.

The supply air system consists of two 100 percent capacity air handling units of about 14,000 scfm each with a ducted air distribution system and automatic controls. The air handling units are located in the lower south air handling equipment room on elevation 135′-3″ of the annex building. Heating coils are supplied with water from the hot water heating system and cooling coils are supplied from the central chilled water system. The units draw 100 percent outdoor air through the common, louvered outdoor air intake plenum #2 as described in subsection 9.4.2. They discharge into a duct distribution system which is routed to the health physics and machine shop areas. Humidification is controlled to maintain a minimum 35 percent relative humidity via a steam humidifier located in the main system supply duct and supplied with water from the demineralized water system.

The exhaust air system consists of two 100 percent capacity exhaust centrifugal fans sized to allow the system to maintain a negative pressure with ductwork and automatic controls, and a separate machine shop exhaust fan and high efficiency filter for exhausting from machine tools and other localized areas in the hot machine shop. The exhaust fans are located in the staging and storage area on elevation 135′-3″ of the annex building. The machine shop exhaust fan and filter are located locally in the machine shop. The air flow rates are balanced to maintain a constant exhaust design air flow through the fans.

The exhaust fans discharge to a common duct which is routed to the plant vent stack. A radiation monitor measures activity in the common discharge duct downstream of the exhaust fans and activates an alarm in the main control room when excess activity in the effluent discharge is detected. The radiation monitoring system is described in Section 11.5.

Individual flexible exhaust duct branches are provided to machine tools. The flexible ducts are connected to a hard duct manifold which is connected to a filter and exhaust fan. The exhaust fan discharges into the main system exhaust ductwork.

Electric unit heaters are provided in the security, stairwell, and elevator machine rooms to maintain the space at a minimum temperature.

9.4.11.2.2 Component Description

The health physics and hot machine shop HVAC system is comprised of the following major components. These components are located in the Seismic Category II portion of the annex building.

Supply Air Handling Units

Each air handling unit consists of a low efficiency filter bank, a high efficiency filter bank, a hot water heating coil, a chilled water cooling coil bank, and a supply fan with automatic inlet vanes.

Supply and Exhaust Air Fans

The supply and exhaust fans are centrifugal type, single width single inlet (SWSI) or double width double inlet (DWDI), with high efficiency wheels and backward inclined blades to produce non-overloading horsepower characteristics. The fans are designed and rated in accordance with ANSI/AMCA 210 (Reference 4), ANSI/AMCA 211 (Reference 5), and ANSI/AMCA 300 (Reference 6).

Low Efficiency Filters and High Efficiency Filters

The low efficiency (25 percent) filters and high efficiency (80 percent) filters have a rated dust spot efficiency based on ASHRAE 52 and 126 (References 7 and 35). The filters meet UL 900 (Reference 8) Class I construction criteria.

Cooling Coils

The chilled water cooling coils are counterflow, finned tubular type. The cooling coils are designed and rated in accordance with ASHRAE 33 (Reference 11) and ANSI/ARI 410 (Reference 12).

Heating Coils

The hot water heating coils are counterflow, finned tubular type. The heating coils are provided with integral face and bypass dampers to prevent freeze damage when modulating heat output. The heating coils are designed and rated in accordance with ASHRAE 33 (Reference 11) and ANSI/ARI 410 (Reference 12).

Humidifier

The humidifier is a packaged electric steam generator type which converts water to steam and distributes it through the air handling system. The humidifier is designed and rated in accordance with ARI 640 (Reference 13).

Shutoff, Control, Balancing, and Backdraft Dampers

Multiblade, two-position remotely operated shutoff dampers are parallel-blade type. Multiblade, control and balancing dampers are opposed-blade type. Backdraft dampers are provided to prevent backflow through ductwork when operating the machine tools exhaust fan. Air handling unit and fan shutoff dampers are designed for maximum fan static pressure at shutoff flow. Dampers meet the performance requirements of ANSI/AMCA 500 (Reference 14).

Fire Dampers

Fire dampers are provided at duct penetrations through fire barriers to maintain the fire resistance ratings of the barriers. The fire dampers meet the design and installation requirements of UL 555 (Reference 15).

Ductwork and Accessories

Ductwork, duct supports and accessories are constructed of galvanized steel. Ductwork subject to fan shutoff pressure is structurally designed for fan shutoff pressures. Ductwork, supports and accessories meet the design and construction requirements of SMACNA Rectangular and Round Industrial Duct Construction Standards (References 16 and 34) and SMACNA HVAC Duct Construction Standards – Metal and Flexible (Reference 17).

9.4.11.2.3 System Operation

Normal Plant Operation

During normal operation, one supply air handling unit and one exhaust fan operate continuously to maintain suitable temperatures in the health physics and hot machine shop areas of the annex building. The supply air flow is automatically modulated to maintain a negative pressure in the areas served with respect to the outdoors and to surrounding areas which do not have their exhausts monitored for radioactivity. Differential pressure controllers, with sensors in the general health physics area and sensors mounted outdoors (shielded from wind effects), modulate the automatic inlet vanes of the supply fan to maintain area negative pressure. In addition, a separate differential pressure controller with a sensor in the hot machine shop modulates a damper in the supply air duct to the hot machine shop to maintain a negative pressure in the shop with respect to outdoors and to surrounding areas which do not have their exhausts monitored for radioactivity.

The temperature in the health physics and the hot machine shop area is maintained within the design range by a temperature sensor located in the health physics area, with which a controller modulates the control valve on the chilled water supply lines to the cooling coil and the face and bypass damper of the heating coil.

Abnormal Plant Operation

The health physics and hot machine shop HVAC system is not required to operate during any abnormal plant condition.

9.4.11.3 Safety Evaluation

The health physics and hot machine shop HVAC system has no safety-related functions and therefore requires no nuclear safety evaluation.

9.4.11.4 Tests and Inspections

The health physics and hot machine shop HVAC system is designed to permit periodic inspection of system components. Each component is inspected prior to installation. Components of each system are accessible for periodic inspection during normal plant operation. A system air balance test and adjustment to design conditions is conducted during the plant preoperational test program. Air flow rates are measured and balanced in accordance with the guidelines of SMACNA HVAC Systems - Testing, Adjusting and Balancing (Reference 19). Instruments are calibrated during testing. Automatic controls are tested for actuation at the proper setpoints. Alarm functions are checked for operability.

9.4.11.5 Instrumentation Application

The health physics and hot machine shop HVAC system operation is controlled by the plant control system. Refer to subsection 7.1.1 for a discussion of the plant control system.

Temperature controllers maintain the proper space temperature. Supply air temperature is controlled by sensing the temperature in the general health physics area.

Temperature is indicated for each air handling unit supply air discharge duct.

Operational status of fans is indicated in the main control room. The fans and air handling units can be placed into operation or shutdown from the main control room.

Differential pressure indication is provided for each of the filters in the air handling units and an alarm for high pressure drop is provided for each air handling unit.

Airflow is indicated for the air handling unit and exhaust fan discharge ducts. Alarms are provided for low air flow rates in the fan discharge ducts.

An alarm is provided for high radiation in the main exhaust duct to the vent stack.

An alarm is provided for smoke in the common discharge duct from the supply air handling units.

Position indicating lights are provided for automatic dampers.

9.4.12 Combined License Information

The Combined License applicants referencing the AP1000 certified design will implement a program to maintain compliance with ASME AG-1 (Reference 36), ASME N509 (Reference 2), ASME N510 (Reference 3) and Regulatory Guide 1.140 (Reference 30) for portions of the nuclear island nonradioactive ventilation system and the containment air filtration system identified in subsection 9.4.1 and 9.4.7. The Combined License applicant will also provide a description of the MCR/CSA HVAC subsystem's recirculation mode during toxic emergencies, and how the subsystem equipment isolates and operates, as applicable, consistent with the toxic issues, including conformance with Regulatory Guide 1.78 (Reference 37), to be addressed by the Combined License applicant as discussed in DCD subsection 6.4.7.

9.4.13 References

1. "Functional Criteria For Emergency Response Facilities," USNRC NUREG 0696.
2. "Nuclear Power Plant Air-Cleaning Units and Components," ASME N509-1989 (R1996).
3. "Testing of Nuclear Air-Cleaning Systems," ASME N510-1989.
4. "Laboratory Method of Testing Fans for Rating Purposes," ANSI/AMCA 210-85.
5. "Certified Ratings Program Air Performance," ANSI/AMCA 211-87.
6. "Reverberant Room Method of Testing Fans For Rating Purposes," ANSI/AMCA 300-85.
7. Gravimetric and Dust Spot Procedures for Testing Air-Cleaning Devices Used in General Ventilation for Removing Particulate Matter, ASHRAE 52.1, 1992.
8. "Test Performance of Air-Filter Units," UL-900, 1994.
9. "High-Efficiency, Particular, Air-Filter Units," UL-586, 1996.
10. "Heating and Cooling Equipment," UL 1995, 1995.
11. "Methods of Testing for Rating Forced Circulation Air Cooling and Air Heating Coils," ASHRAE 33-78.
12. "Forced-Circulation Air Cooling and Air Heating Coils," ANSI/ARI 410-91.
13. "Commercial and Industrial Humidifiers," ARI 640-96.
14. "Testing Methods for Louvers, Dampers, and Shutters," ANSI/AMCA 500-89.
15. "Fire Dampers," UL-555, 1999.
16. "Rectangular Industrial Duct Construction Standards," SMACNA, 1980.
17. "HVAC Duct Construction Standards – Metal and Flexible," SMACNA, 1995.
18. "HVAC Duct Leakage Test Manual," SMACNA, 1985.
19. "HVAC Systems – Testing, Adjusting, and Balancing," SMACNA, 1993.
20. Code of Federal Regulations, Title 10, Part 50, Appendix I.
21. Code of Federal Regulations, Title 10, Part 20.
22. "Heat-Stress Management Program for Nuclear Power Plants," EPRI NP-4453 by Westinghouse Electric Corporation, dated February 1986.

23. Branch Technical Position CSB 6-4 to "Containment Isolation System," Standard Review Plan 6.2.4 of NUREG-0800 Rev. 2, July 1981.

24. "Military Specification Filter, Particulate, High-Efficiency, Fire Resistant," MIL-F-51068F.

25. "Leakage Rated Dampers for Use in Smoke Control System," UL-555S, 1999.

26. "Electric Duct Heaters," UL-1996, 1996.

27. "Standard for Installation of Air Conditioning and Ventilation Systems," NFPA 90A, 1999.

28. "National Electrical Code," NFPA 70, 1999.

29. "Loss of Charcoal from Adsorber Cells," IE Bulletin 80-03, 1980.

30. "Design, Inspection, and Testing Criteria for Air Filtration and Adsorption Units of Normal Atmospheric Cleanup Systems in Light-Water-Cooled Nuclear Power Plants," Regulatory Guide (RG) 1.140-2001, Revision 2.

31. "Installation Design and Installation of Large Lead Storage Batteries for Nuclear Power Plants," Regulatory Guide 1.128, Revision 1, October 1978.

32. "Ventilation for Acceptable Indoor Air Quality," ASHRAE Standard 62-1999.

33. NFPA 92A-2000, "Recommended Practice for Smoke Control Systems."

34. "Round Industrial Duct Construction Standards," SMACNA, 1999.

35. "Method of Testing HVAC Air Ducts," ASHRAE 126, 2000.

36. "Code on Nuclear Air and Gas Treatment," ASME/ANSI AG-1-1997.

37. "Evaluating the Habitability of a Nuclear Power Plant Control Room During a Postulated Hazardous Chemical Release," USNRC Regulatory Guide 1.78, Revision 1, December 2001.

38. "Standard Test Methods for Determining Air Change in a Single Zone by Means of a Tracer Gas Dilution," ASTM E741, 2000.

39. "Electric Heaters for Use in Hazardous (Classified) Locations," UL 823.

40. "Movable and Wall or Ceiling Hung Electrical Room Heaters," UL 1278.

41. "Electrical Baseboard Heating Equipment," UL 1042.

Table 9.4-1

DESIGN FILTRATION EFFICIENCIES AND NOMINAL AIRFLOW RATES FOR HVAC SYSTEMS (1)

Areas Served[1]	Design/Test Standard	Ventilation Airflow (cfm)	Recirculation Flow (cfm)	Humidity Control	HEPA Efficiency	Charcoal Efficiency[3]	Maximum Inleakage (cfm)
MCR/CSA (Supplemental Air)	RG 1.140	860	3,140	Yes	99%	90%	25[4]
Containment	RG 1.140	4,000[2]	N/A	Yes	99%	90%	N/A

Notes:

1. Ventilation cfm is shown for each train unless otherwise noted.
2. Both trains of the containment purge may be operated at the same time prior to and during cold shutdown.
3. Charcoal filters are 4-inch deep Type III adsorber cell.
4. This VBS inleakage represents the total inleakage into the combined MCR/CSA HVAC volume.

Table 9.4.1-1 (Sheet 1 of 2)

COMPONENT DATA – NUCLEAR ISLAND NONRADIOACTIVE VENTILATION SYSTEM

MCR/CSA HVAC Subsystem (Nominal Values)

Supply Air Handling Units	
Quantity	2
System capacity per unit (%)	100
Supply Fan Requirements	
Type	Centrifugal
Design airflow (scfm)	22,000
Fan static pressure (in. wg)	9.75
Return Air/Smoke Purge Fan Requirements	
Type	Centrifugal
Design airflow (scfm)	20,500
Fan static pressure (in. wg)	6
Cooling Coil Requirements	
Type	Chilled Water
Capacity (Btu/hr)	960,000
Water flow (gpm)	See Table 9.2.7-1
Heating Coil Requirements	
Type	Electric
Capacity (kw)	170
Filter Requirements	
Low efficiency filter, minimum ASHRAE efficiency (%)	25
High efficiency filter, minimum ASHRAE efficiency (%)	80

Table 9.4.1-1 (Sheet 2 of 2)

COMPONENT DATA – NUCLEAR ISLAND NONRADIOACTIVE VENTILATION SYSTEM

MCR/CSA HVAC Subsystem (Nominal Values)

Supplemental Air Filtration Subsystem	
Quantity	2
System capacity per unit (%)	100
Fan Requirements	
Type	Centrifugal
Design airflow (scfm)	4,000
Fan static pressure (in. wg)	14
Heating Coil Requirements	
Type	Electric
Capacity (kw)	20
Filter Requirements	
High efficiency filter, minimum ASHRAE efficiency (%)	80
HEPA filter, DOP efficiency (%)	99.97
Post filter, DOP efficiency (%)	95
Charcoal Adsorber Requirements	
Bed depth (in.)	4.0
Decontamination efficiency (%)	90
Air residence time (sec.)	0.5

MCR Envelope Leakage Rates

Leakage	Inleakage Rate at 1/8 in. wg (scfm)	Outleakage Rate at 1/8 in. wg (scfm)
MCR access doors	--	Note 1
CSA access doors	--	10
MCR structure	--	Note 1
CSA structure	--	500
MCR/CSA HVAC equipment & ductwork (operating)	25	485

Note:

1. The total outleakage rate from the MCR access doors and the MCR structure is 5 scfm.

Table 9.4.1-2 (Sheet 1 of 3)

COMPONENT DATA – NUCLEAR ISLAND NONRADIOACTIVE VENTILATION SYSTEM

Class 1E Electrical Room HVAC Subsystem (Nominal Values)

Division "A & C" Supply Air Handling Units	
Quantity	2
System capacity per unit (%)	100
Supply Fan Requirements	
Type	Centrifugal
Design airflow (scfm)	18,500
Fan static pressure (in. wg)	6.5
Return Air/Smoke Purge Fan Requirements	
Type	Centrifugal
Design airflow (scfm)	16,000
Fan static pressure (in. wg)	6.0
Cooling Coil Requirements	
Type	Chilled Water
Capacity (Btu/hr)	960,000
Water flow (gpm)	See Table 9.2.7-1
Heating Coil Requirements	
Type	Electric
Capacity (kw)	290
Filter Requirements	
Low efficiency filter, minimum ASHRAE efficiency (%)	25
High efficiency filter, ASHRAE efficiency (%)	80

Table 9.4.1-2 (Sheet 2 of 3)

COMPONENT DATA – NUCLEAR ISLAND NONRADIOACTIVE VENTILATION SYSTEM

Class 1E Electrical Room HVAC Subsystem (Nominal Values)

Division "A & C" Class 1E Battery Room Exhaust Fans	
Quantity per electrical division	2
System capacity per fan (%)	100
Type	Centrifugal
Design airflow (scfm)	1,600
Fan static pressure (in. wg)	3.5
Division "B & D" Supply Air Handling Units	
Quantity	2
System capacity per unit (%)	100
Supply Fan Requirements	
Type	Centrifugal
Design airflow (scfm)	14,500
Fan static pressure (in. wg)	6.5
Return Air/Smoke Purge Fan Requirements	
Type	Centrifugal
Design airflow (scfm)	12,600
Fan static pressure (in. wg)	6.0
Cooling Coil Requirements	
Type	Chilled Water
Capacity (Btu/hr)	550,000
Water flow (gpm)	See Table 9.2.7-1
Heating Coil Requirements	
Type	Electric
Capacity (kw)	140
Filter Requirements	
Low efficiency filter, minimum ASHRAE efficiency (%)	25
High efficiency filter, ASHRAE efficiency (%)	80

Table 9.4.1-2 (Sheet 3 of 3)

COMPONENT DATA – NUCLEAR ISLAND NONRADIOACTIVE VENTILATION SYSTEM

Class 1E Electrical Room HVAC Subsystem (Nominal Values)

Division "B & D" Class 1E Battery Room Exhaust Fans	
Quantity per electrical division	2
System capacity per fan (%)	100
Type	Centrifugal
Design airflow (scfm)	1,200
Fan static pressure (in. wg)	3.5

Table 9.4.1-3

COMPONENT DATA – NUCLEAR ISLAND NONRADIOACTIVE VENTILATION SYSTEM

Passive Containment Cooling System Valve Room Heating and Ventilation Subsystem (Nominal Values)

Exhaust Fan Data	
Quantity	1
System capacity per fan (%)	100
Type	Propeller
Design airflow (scfm)	1,300
Fan static pressure (in. wg)	0.75
Electric Unit Heater	
Quantity	2
System capacity per unit heater (%)	100
Type	Horizontal
Capacity (kw)	10

Table 9.4.2-1

COMPONENT DATA –
ANNEX/AUXILIARY BUILDINGS NONRADIOACTIVE HVAC SYSTEM

Switchgear Room HVAC Subsystem
(Nominal Values)

Air Handling Units	
Quantity	2
System capacity per unit (%)	100
Supply Fan Requirements	
Type	Centrifugal
Design airflow (scfm)	31,000
Static pressure (in. wg)	6.5
Return/Exhaust Fan Requirements	
Type	Centrifugal
Design airflow (scfm)	31,000
Static pressure (in. wg)	3.0

Table 9.4.2-2

COMPONENT DATA –
ANNEX/AUXILIARY BUILDINGS NONRADIOACTIVE HVAC SYSTEM

Equipment Room HVAC System
(Nominal Values)

Supply Air Handling Units	
Quantity	2
System capacity per unit (%)	100
Supply Fan Requirements	
Type	Centrifugal
Design airflow (scfm)	31,000
Static pressure (in. wg)	6.9
Return/Exhaust Fan Requirements	
Type	Centrifugal
Design airflow (scfm)	28,700
Static pressure (in. wg)	3.0
Battery Room Exhaust Fans	
Quantity	2
System capacity per unit (%)	100
Type	Centrifugal
Design airflow (scfm)	750
Static pressure (in. wg)	1.5

Table 9.4.3-1

COMPONENT DATA – RADIOLOGICALLY CONTROLLED AREA VENTILATION SYSTEM

Auxiliary/Annex Building Ventilation Subsystem (Nominal Values)

Normal Residual Heat Removal Pump Room Unit Coolers	
Quantity	2
System capacity per unit (%)	100
Fan Requirements	
Type	Centrifugal
Design airflow (scfm)	2,500
Fan static pressure (in. wg)	4.5
Cooling Coil Requirements	
Type	Chilled Water
Capacity (Btu/hr)	102,000
Water flow (gpm)	See Table 9.2.7-1
Filter Requirements	
Low efficiency filter, minimum ASHRAE efficiency (%)	25
Chemical and Volume Control Makeup Pump Room Unit Coolers	
Quantity	2
System capacity per unit (%)	100
Fan Requirements	
Type	Centrifugal
Design airflow (scfm)	2,500
Fan static pressure (in. wg)	3.0
Cooling Coil Requirements	
Type	Chilled Water
Capacity (Btu/hr)	164,000
Water flow (gpm)	See Table 9.2.7-1
Filter Requirements	
Low efficiency filter, minimum ASHRAE efficiency (%)	25

Table 9.4.6-1

COMPONENT DATA – CONTAINMENT RECIRCULATION COOLING SYSTEM

Containment Recirculation Fan Coil Unit Subsystem (Nominal Values)

Reactor Containment Recirculation Fan Coil Assemblies	
Quantity	2
Fan coil units per assembly	2
System capacity per assembly (%)	100
Fan Data	
Quantity (fans/unit)	1
Type	Vaneaxial
Normal design air flow (scfm)	62,800
Low speed design air flow (scfm)	37,200
Fan static pressure (in. wg)	11
Cooling Coil Data	
Quantity (coil bank/unit)	3
Total cooling load (Btu/hr)	3,804,500
Total chilled water flow rate (gpm)	475
Total heating load (Btu/hr)	2,247,857
Total hot water flow rate (gpm)	225

Table 9.4.7-1 (Sheet 1 of 2)

COMPONENT DATA – CONTAINMENT AIR FILTRATION SYSTEM

(Nominal Values)

Supply Air Handling Units	
Quantity	2
System capacity per assembly (%)	100
Supply Fan Requirements	
Type	Centrifugal
Design airflow (scfm)	4,000
Fan static pressure (in. wg)	14
Cooling Coil Requirements	
Type	Chilled Water
Capacity (Btu/hr)	380,000
Water flow (gpm)	41
Heating Coil Requirements	
Type	Hot Water
Capacity (Btu/hr)	290,000
Filter Requirements	
Low efficiency filter, minimum ASHRAE efficiency (%)	25
High efficiency filter, minimum ASHRAE efficiency (%)	80

Table 9.4.7-1 (Sheet 2 of 2)

COMPONENT DATA – CONTAINMENT AIR FILTRATION SYSTEM

(Nominal Values)

Exhaust Air Filtration Units	
Quantity	2
System capacity per assembly (%)	100
Fan Requirements	
Type	Centrifugal
Design airflow (scfm)	4,000
Fan static pressure (in. wg)	27
Heating Coil Requirements	
Type	Electric
Capacity (kw)	20
Filter Requirements	
High efficiency filter, minimum ASHRAE efficiency (%)	80
HEPA filter, DOP efficiency (%)	99.97
Post filter, DOP efficiency (%)	95
Charcoal Adsorber Requirements	
Bed depth (in.)	4.0
Decontamination efficiency (%)	90
Air residence time (sec.)	0.5

Table 9.4.10-1 (Sheet 1 of 2)

COMPONENT DATA – DIESEL GENERATOR BUILDING HEATING AND VENTILATION SYSTEM

Normal Heating and Ventilation Subsystem (Nominal Values)

Engine Room Air Handling Unit	
Quantity	2 (one per diesel generator room)
System capacity per unit (%)	100
Fan Requirements	
Type	Centrifugal
Design airflow (scfm)	15,000
Static pressure (in. wg)	3.4
Filter Requirements	
Low efficiency filter, minimum ASHRAE efficiency (%)	25
High efficiency filter, minimum ASHRAE efficiency (%)	80
Service Module Air Handling Unit	
Quantity	2 (one per diesel generator room)
System capacity per unit (%)	100
Fan Requirements	
Type	Centrifugal
Design airflow (scfm)	2,300
Static pressure (in. wg)	3.6
Motor nameplate horsepower	3.0
Heating Coil Requirements	
Type	Electric
Capacity (kw)	20 (two stages)
Filter Requirements	
Low efficiency filter, minimum ASHRAE efficiency (%)	25
High efficiency filter, minimum ASHRAE efficiency (%)	80

Table 9.4.10-1 (Sheet 2 of 2)

COMPONENT DATA – DIESEL GENERATOR BUILDING HEATING AND VENTILATION SYSTEM

Normal Heating and Ventilation Subsystem (Nominal Values)

Electric Unit Heaters	
Quantity	4 (two per diesel generator room)
System capacity per unit (%)	50
Type	Horizontal
Capacity (kw)	30

Table 9.4.10-2

COMPONENT DATA – DIESEL GENERATOR BUILDING HEATING AND VENTILATION SYSTEM

Standby Exhaust Ventilation Subsystem (Nominal Values)

Standby Exhaust Fan	
Quantity	4 (two per diesel generator room)
System capacity per unit (%)	50
Type	Upblast Roof Ventilator
Design airflow (scfm)	25,000
Static pressure (in. wg)	0.25

Table 9.4.10-3

COMPONENT DATA – DIESEL GENERATOR BUILDING HEATING AND VENTILATION SYSTEM

Fuel Oil Day Tank Vault Exhaust Subsystem (Nominal Values)

Fuel Oil Day Tank Vault Exhaust Fan	
Quantity	2 (one per tank vault)
System capacity per unit (%)	100
Type	Centrifugal
Design airflow (scfm)	500
Static pressure (in. wg)	0.5

Table 9.4.10-4

COMPONENT DATA – DIESEL GENERATOR BUILDING HEATING AND VENTILATION SYSTEM

Diesel Oil Transfer Module Enclosures Ventilation and Heating Subsystem (Nominal Values)

Diesel Oil Transfer Module Enclosure Exhaust Fan	
Quantity	2 (one per enclosure)
System capacity per unit (%)	100
Type	Centrifugal Roof Exhauster
Design airflow (scfm)	1,000
Static pressure (in. wg)	0.25
Electric Unit Heater	
Quantity	2 (one per enclosure)
System capacity per unit (%)	100
Type	Horizontal
Capacity (kw)	15

[This page intentionally blank]

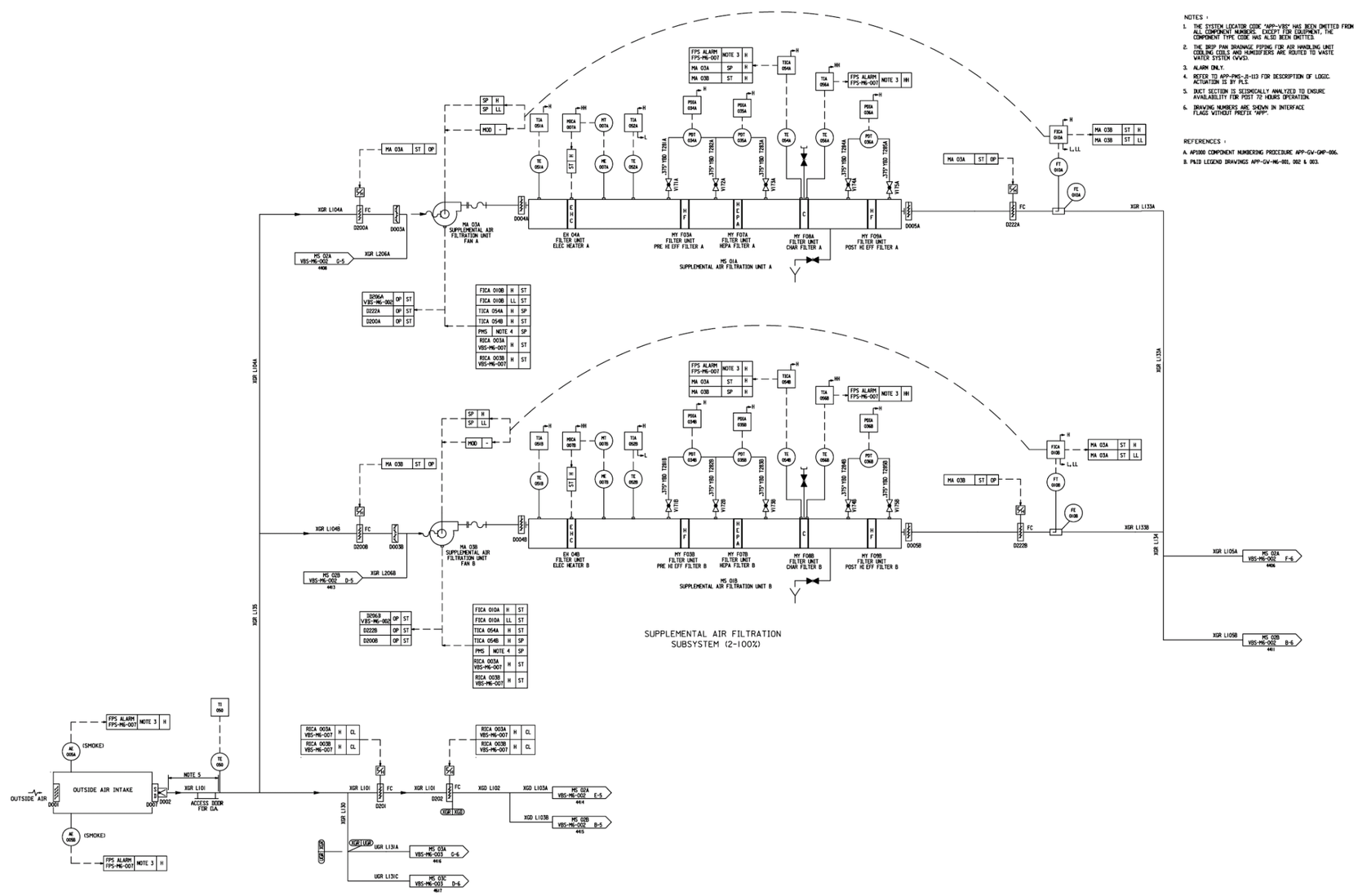

Inside Auxiliary Building

Figure 9.4.1-1 (Sheet 1 of 7)

Nuclear Island Non-Radioactive Ventilation System
Piping and Instrumentation Diagram
(REF) VBS 001

Figure represents system functional arrangement. Details internal to the system may differ as a result of implementation factors such as vendor-specific component requirements.

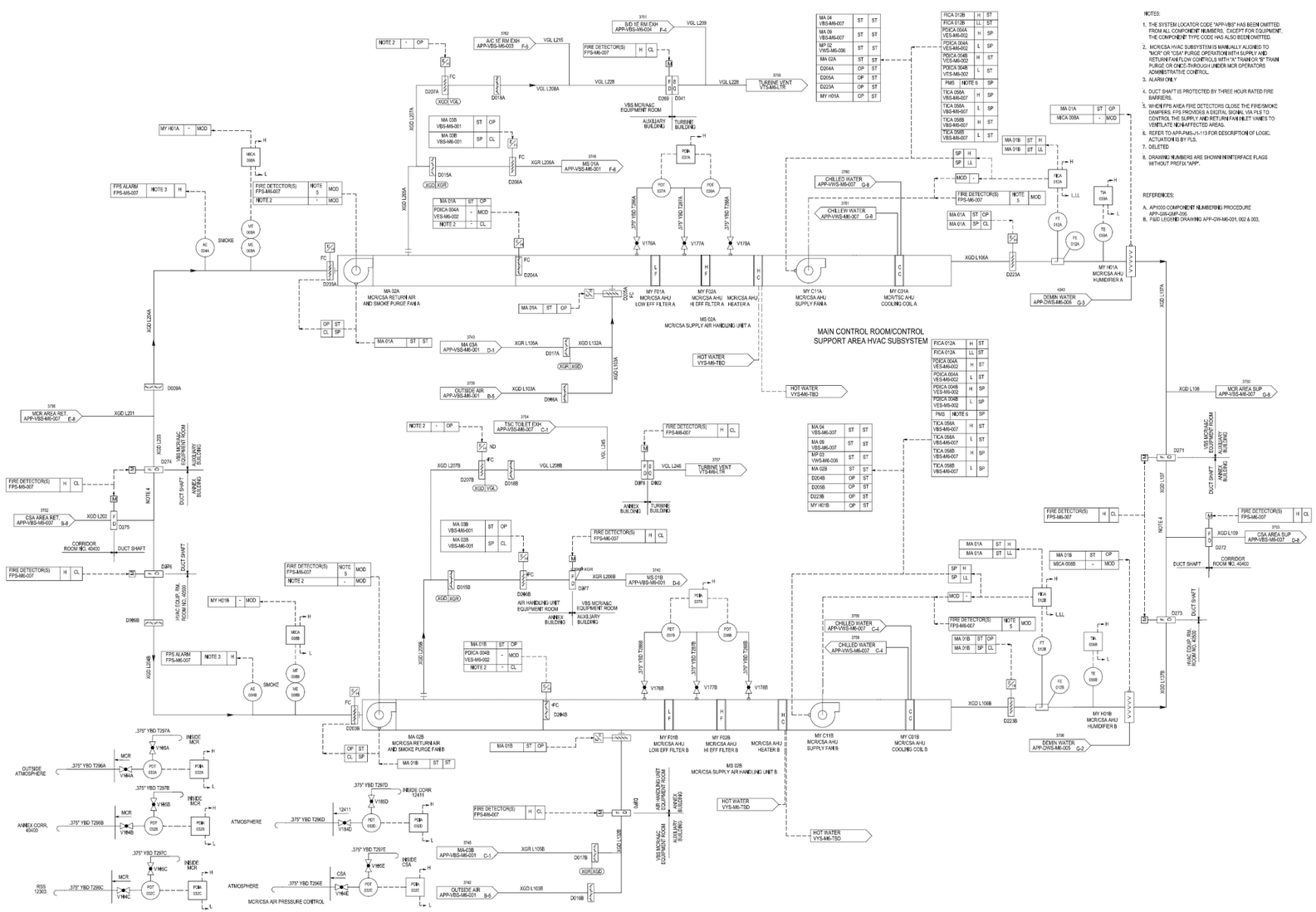

Inside Auxiliary Building

Figure 9.4.1-1 (Sheet 2 of 7)

Nuclear Island Non-Radioactive Ventilation System
Piping and Instrumentation Diagram
(REF) VBS 002

Figure represents system functional arrangement. Details internal to the system may differ as a result of implementation factors such as vendor-specific component requirements.

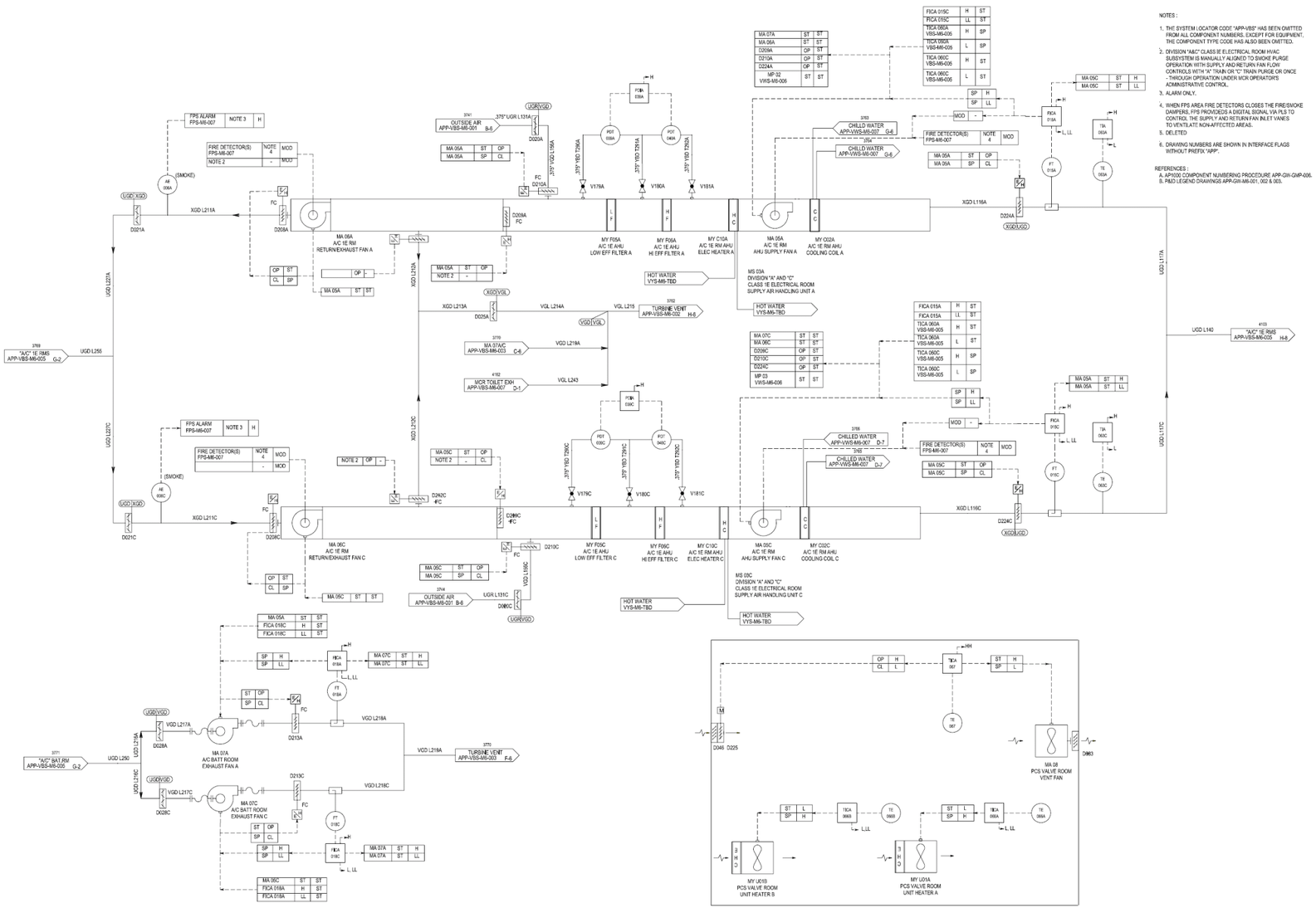

Inside Auxiliary Building

Figure 9.4.1-1 (Sheet 3 of 7)

Nuclear Island Non-Radioactive Ventilation System
Piping and Instrumentation Diagram
(REF) VBS 003

Figure represents system functional arrangement. Details internal to the system may differ as a result of implementation factors such as vendor-specific component requirements.

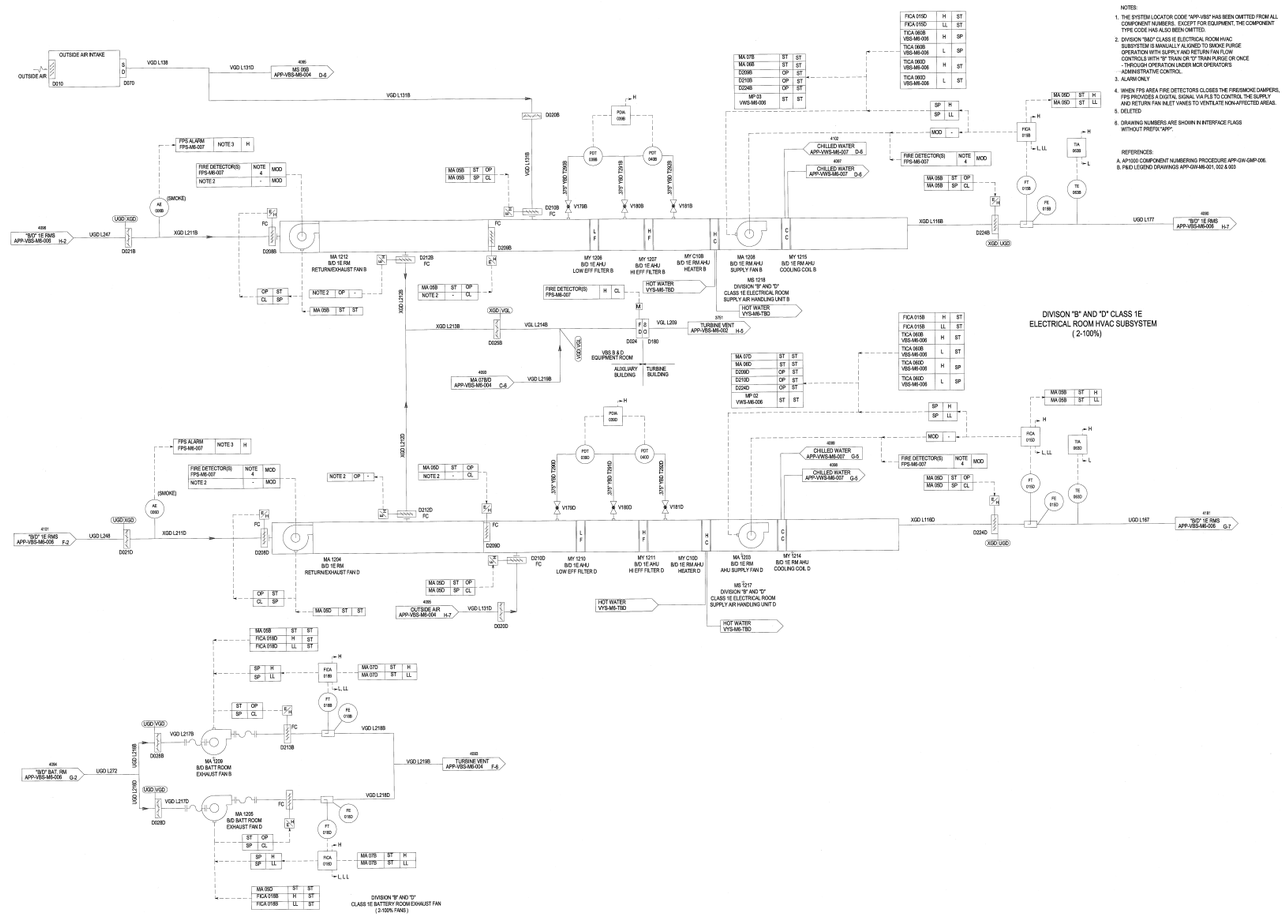

Inside Auxiliary Building

Figure 9.4.1-1 (Sheet 4 of 7)

Nuclear Island Non-Radioactive Ventilation System
Piping and Instrumentation Diagram
(REF) VBS 004

Figure represents system functional arrangement. Details internal to the system may differ as a result of implementation factors such as vendor-specific component requirements.

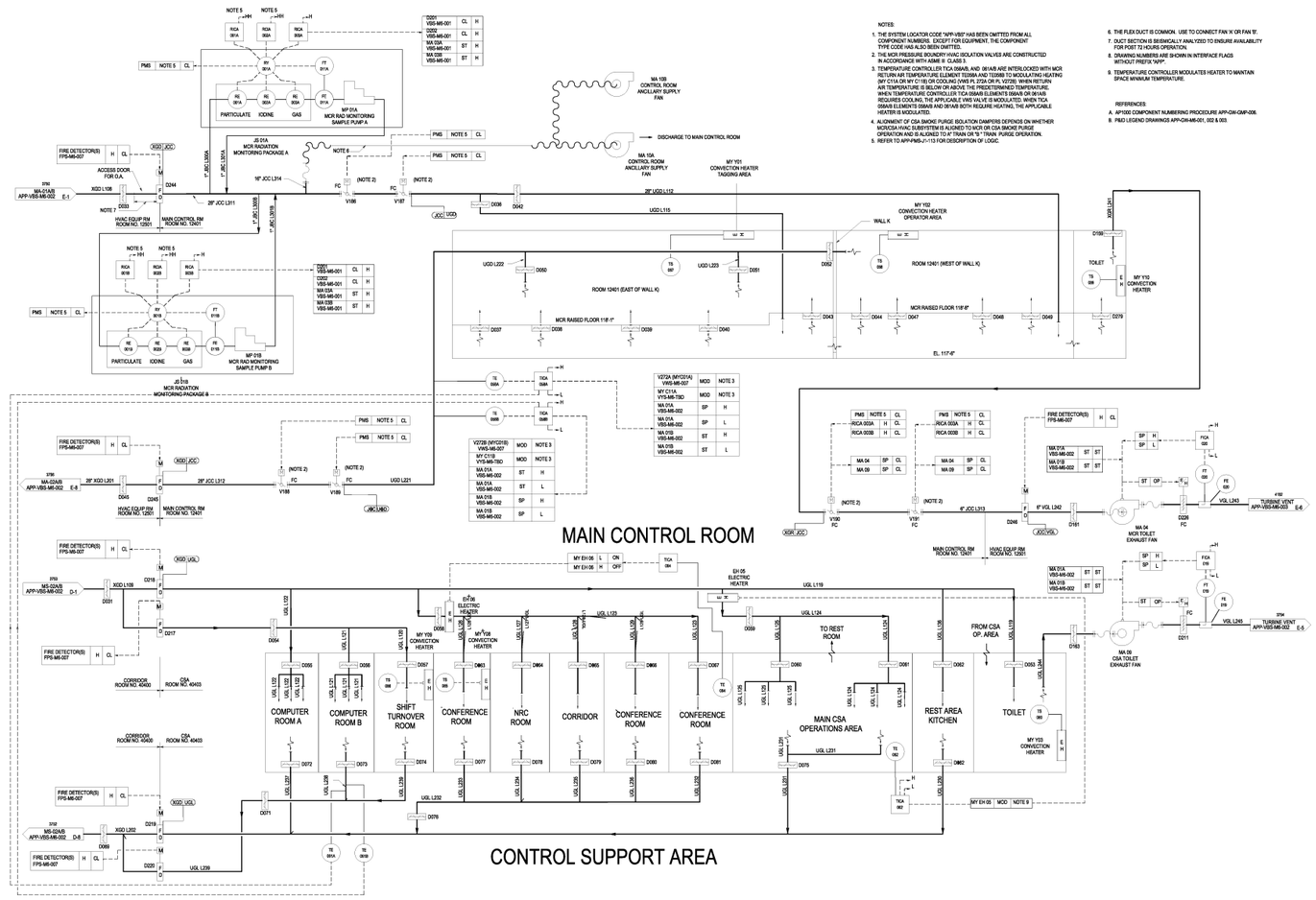

Inside Auxiliary Building

Figure 9.4.1-1 (Sheet 5 of 7)

Nuclear Island Non-Radioactive Ventilation System
Piping and Instrumentation Diagram
(REF) VBS 007

Figure represents system functional arrangement. Details internal to the system may differ as a result of implementation factors such as vendor-specific component requirements.

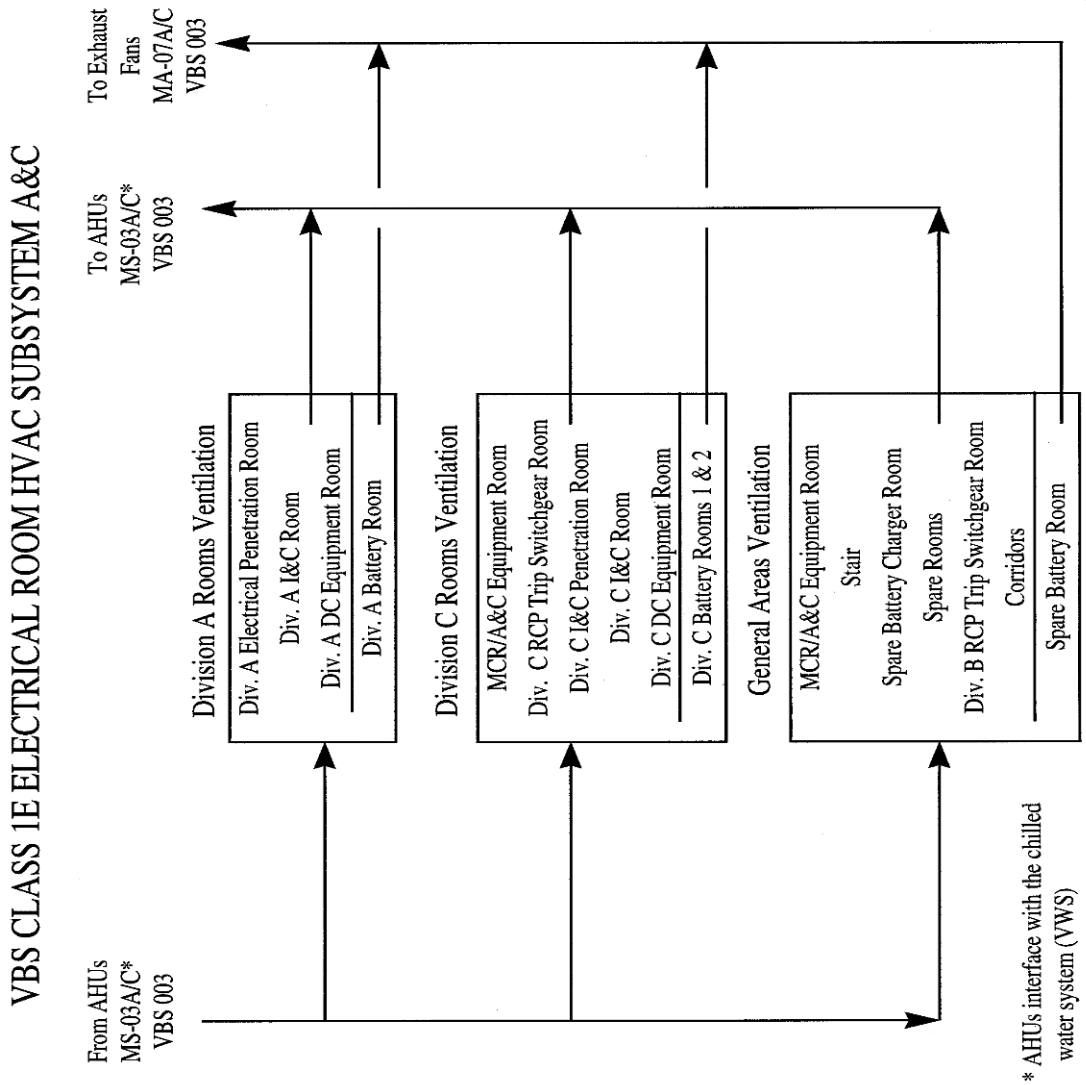

Figure 9.4.1-1 (Sheet 6 of 7)

Figure represents system functional arrangement. Details internal to the system may differ as a result of implementation factors such as vendor-specific component requirements.

Nuclear Island Non-Radioactive Ventilation System Piping and Instrumentation System
(REF) VBS 005

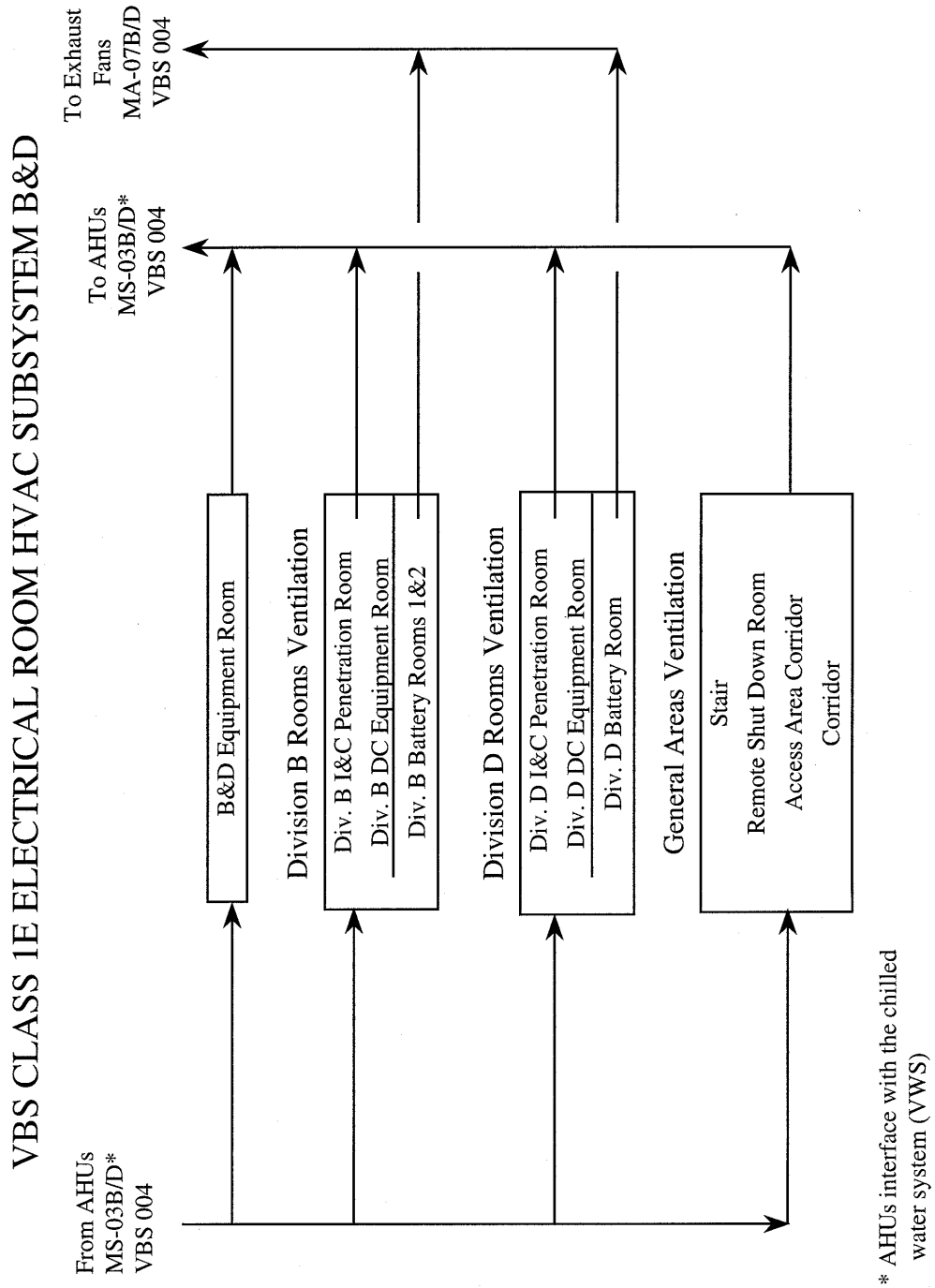

Figure 9.4.1-1 (Sheet 7 of 7)

Figure represents system functional arrangement. Details internal to the system may differ as a result of implementation factors such as vendor-specific component requirements.

Nuclear Island Non-Radioactive Ventilation System Piping and Instrumentation Diagram
(REF) VBS 006

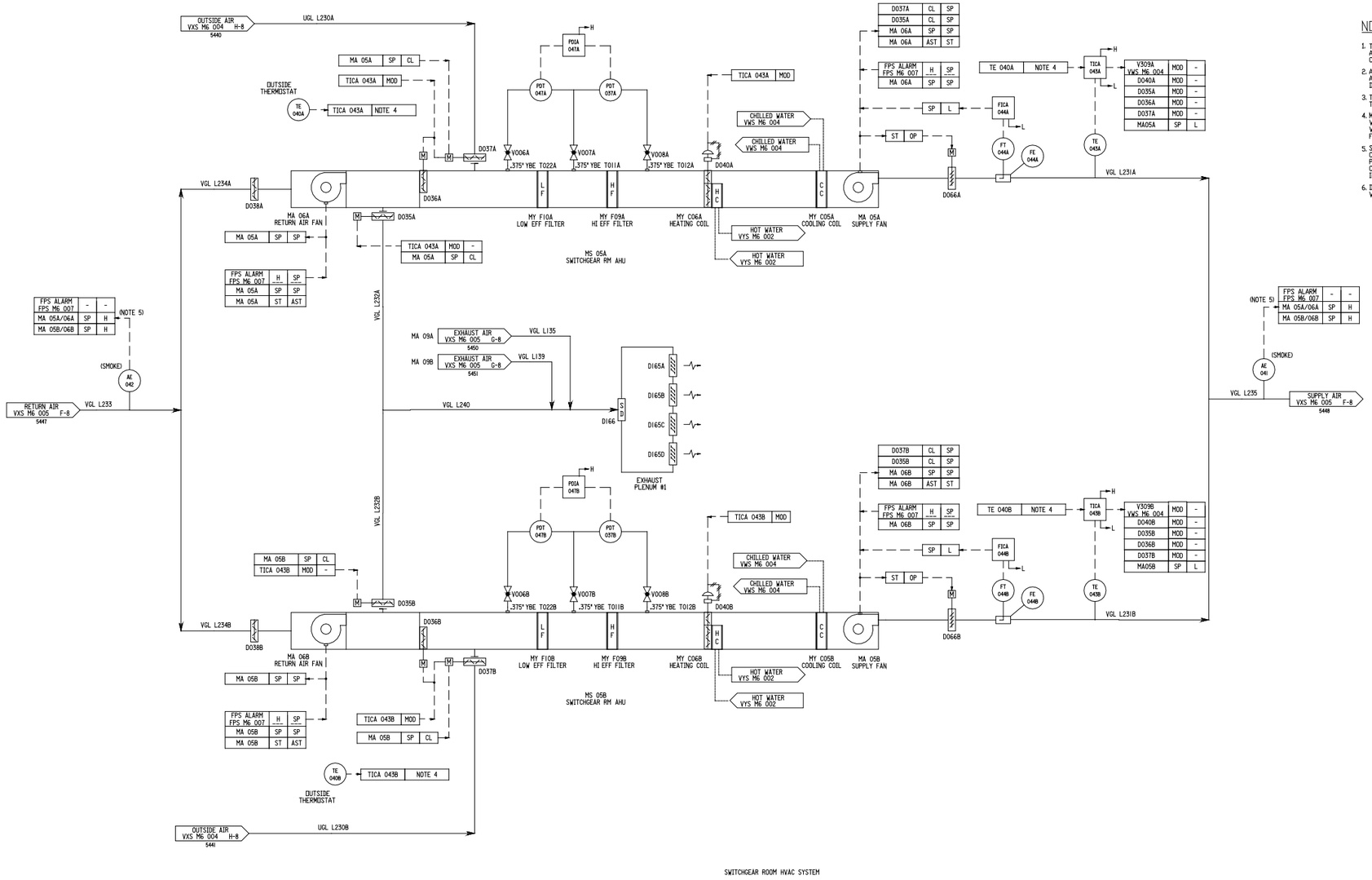

NOTES

1. THE SYSTEM LOCATOR CODE "APP-VXS" HAS BEEN OMITTED FROM ALL COMPONENT NUMBERS, EXCEPT FOR EQUIPMENT, THE COMPONENT TYPE CODE HAS ALSO BEEN OMITTED.
2. ADDITIONAL BALANCING DAMPERS AND FIRE DAMPERS SHALL BE ADDED AS REQUIRED BASED ON THE FINAL LAYOUT OF THE DUCT DISTRIBUTION SYSTEM.
3. THE DRIP PANS FOR COOLING COILS MY C05A/B ARE CONNECTED TO THE WASTE WATER SYSTEM (VWS).
4. MODULATE OUTSIDE AIR, RETURN AIR AND EXHAUST AIR DAMPERS WHEN OUTSIDE AIR <65° F. FOR OUTSIDE AIR >65° F COINCIDENT WITH LOSS OF OFFSITE POWER (LOOP), DAMPERS ARE POSITIONED FOR "ONCE THROUGH" FLOW.
5. SMOKE DETECTION SIGNAL IS PROVIDED TO FIRE PROTECTION CONTROL PANEL THAT IS PART OF FPS. CONTROL SIGNAL IS PROCESSED BY FPS PANEL AND DIRECTED TO THE FANS FOR THE CONTROL FUNCTIONS INDICATED. FPS MAY HAVE ADDITIONAL INITIATING SIGNALS ORIGINATING IN THE FPS.
6. DRAWING NUMBERS ARE SHOWN IN INTERFACE FLAGS WITHOUT PREFIX "APP".

REFERENCES

A. AP1000 COMPONENT NUMBERING PROCEDURE APP-GW-GMP-006.

B. P&ID LEGEND DRAWINGS APP-GW-M6-001, 002 & 003.

Inside Annex Building

Figure 9.4.2-1 (Sheet 1 of 7)

Figure represents system functional arrangement. Details internal to the system may differ as a result of implementation factors such as vendor-specific component requirements.

Annex/Aux Non-Radioactive Ventilation System
Piping and Instrumentation Diagram
(REF) VXS 003

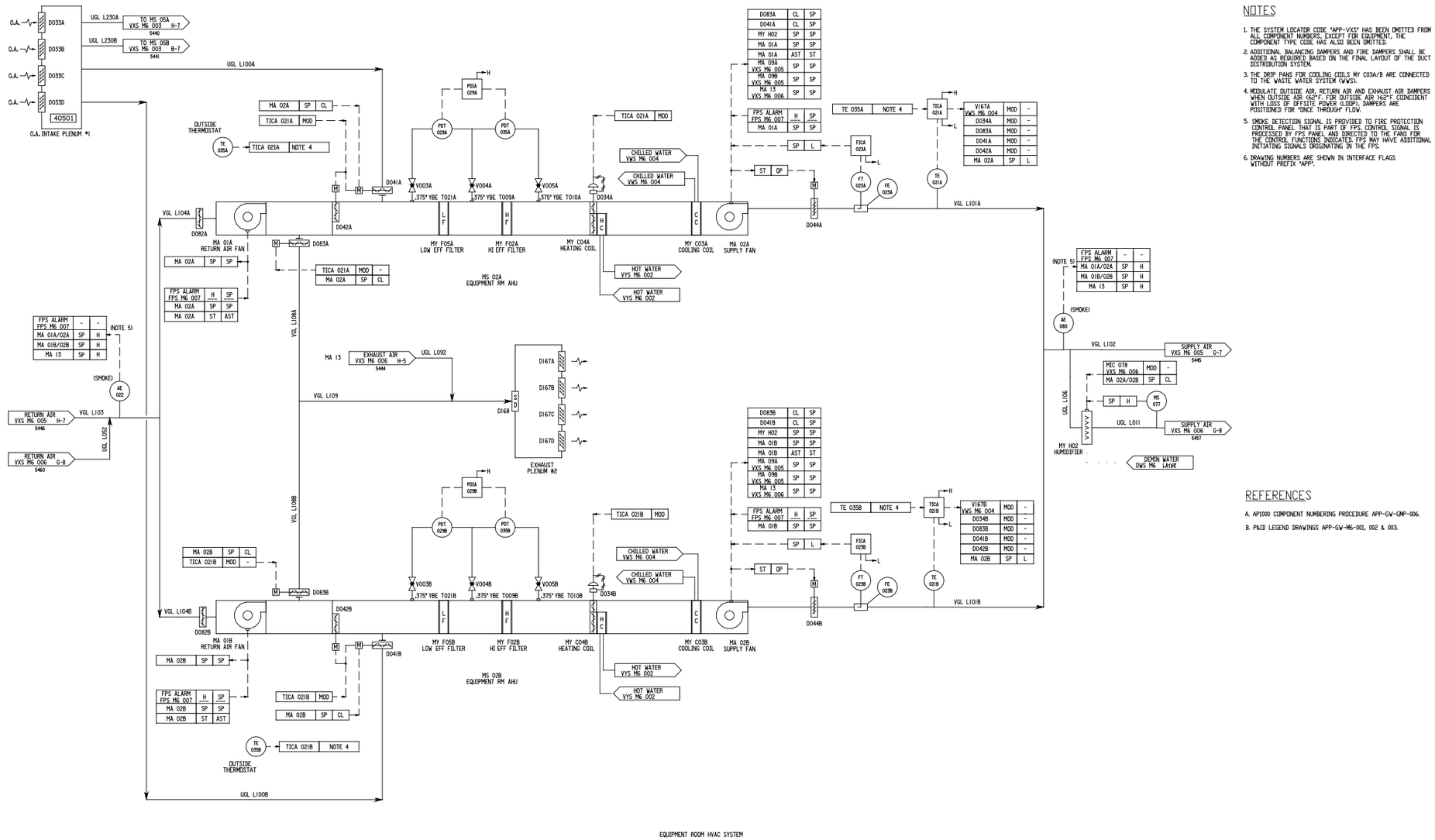

Inside Annex Building

Figure 9.4.2-1 (Sheet 2 of 7)

Figure represents system functional arrangement. Details internal to the system may differ as a result of implementation factors such as vendor-specific component requirements.

Annex/Aux Non-Radioactive Ventilation System
Piping and Instrumentation Diagram
(REF) VXS 004

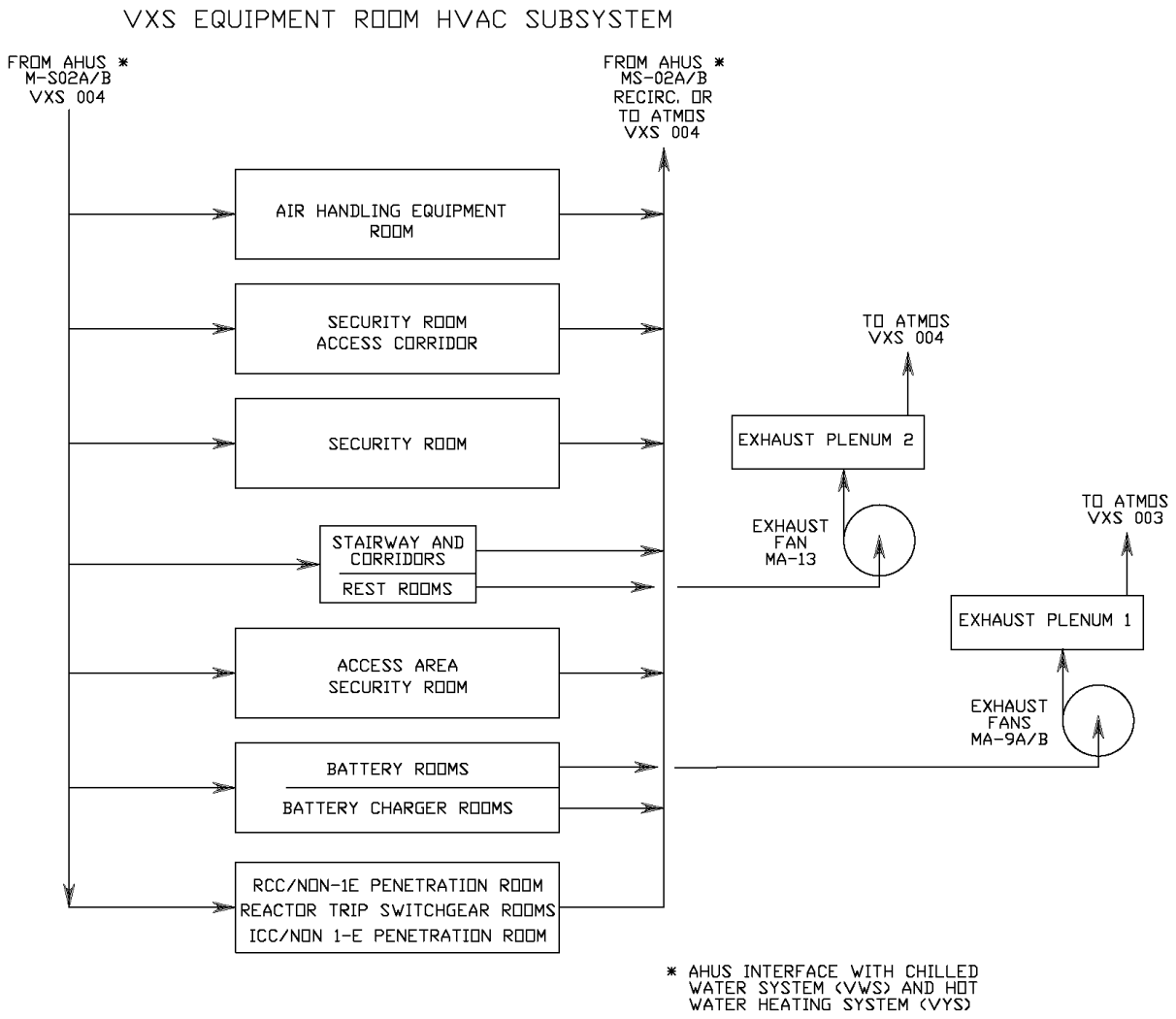

Inside Annex Building

Figure 9.4.2-1 (Sheet 3 of 7)

Figure represents system functional arrangement. Details internal to the system may differ as a result of implementation factors such as vendor-specific component requirements.

Annex/Aux Non-Radioactive Ventilation System Piping and Instrumentation Diagram
(REF) VXS 005 & 006

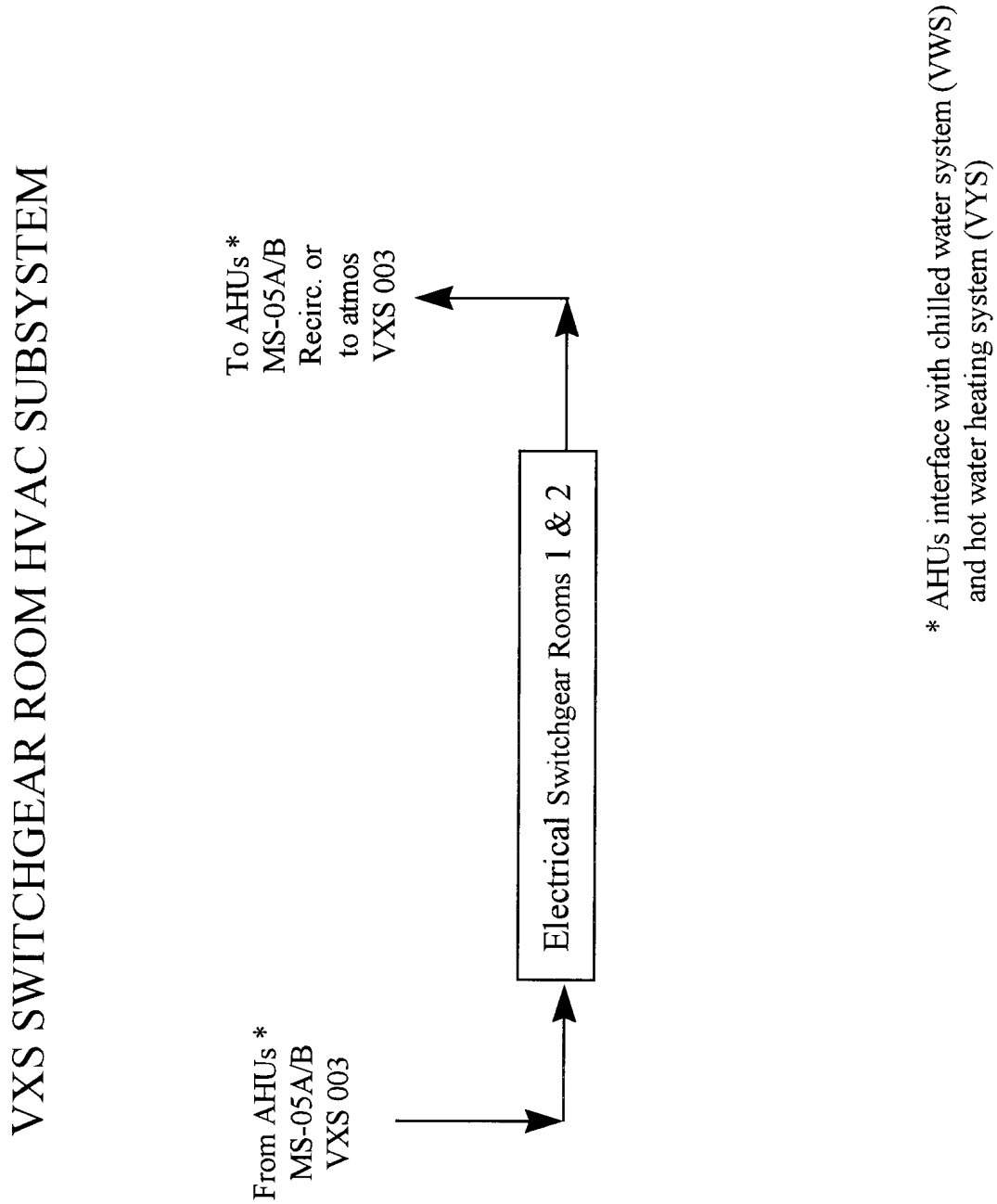

Inside Annex Building

Figure 9.4.2-1 (Sheet 4 of 7)

Figure represents system functional arrangement. Details internal to the system may differ as a result of implementation factors such as vendor-specific component requirements.

Annex/Aux Non-Radioactive Ventilation System Piping and Instrumentation Diagram
(REF) VXS 005

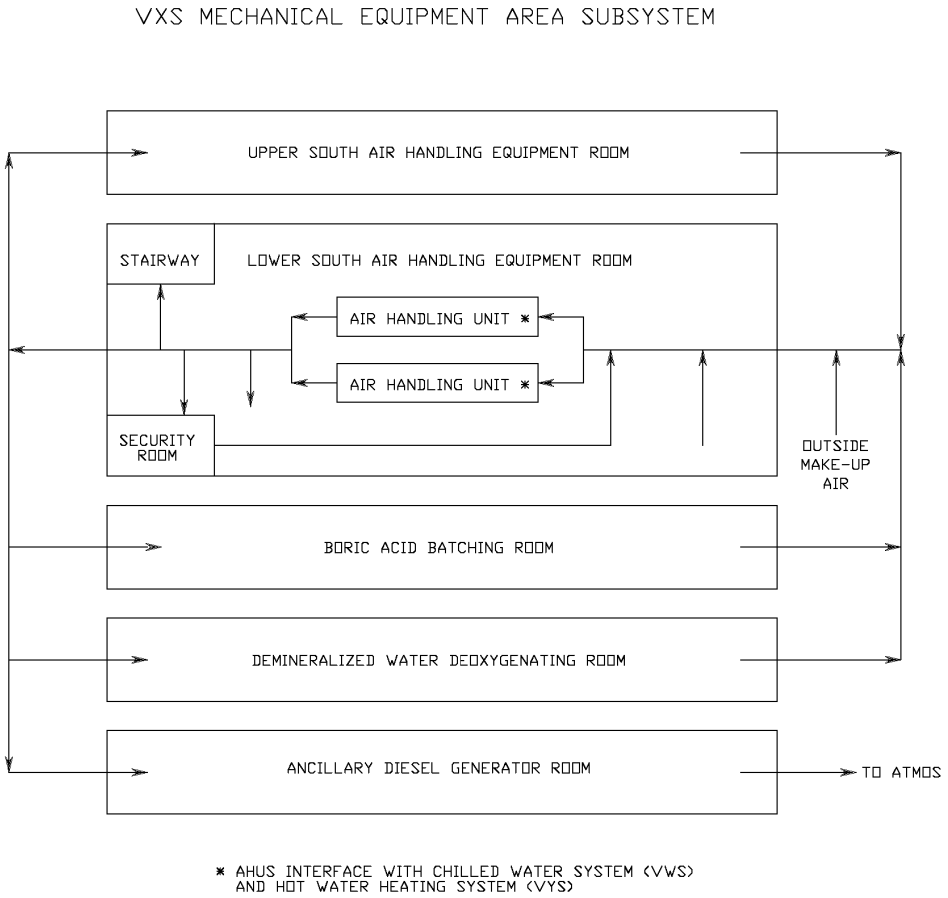

Inside Annex Building

Figure 9.4.2-1 (Sheet 5 of 7)

Figure represents system functional arrangement. Details internal to the system may differ as a result of implementation factors such as vendor-specific component requirements.

Annex/Aux Non-Radioactive Ventilation System Piping and Instrumentation Diagram
(REF) VXS 010

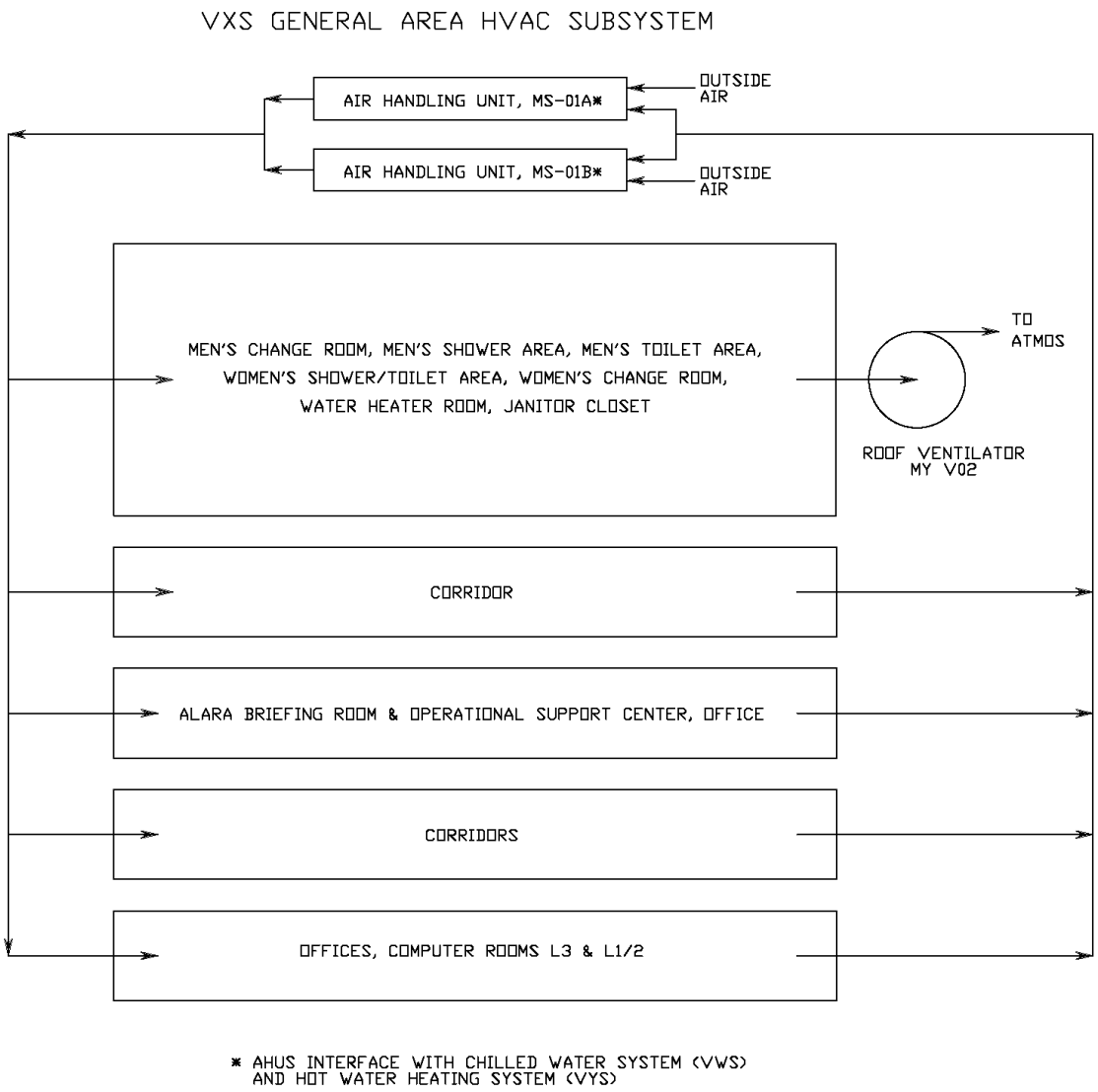

Inside Annex Building

Figure 9.4.2-1 (Sheet 6 of 7)

Figure represents system functional arrangement. Details internal to the system may differ as a result of implementation factors such as vendor-specific component requirements.

Annex/Aux Non-Radioactive Ventilation System Piping and Instrumentation Diagram
(REF) VXS 002

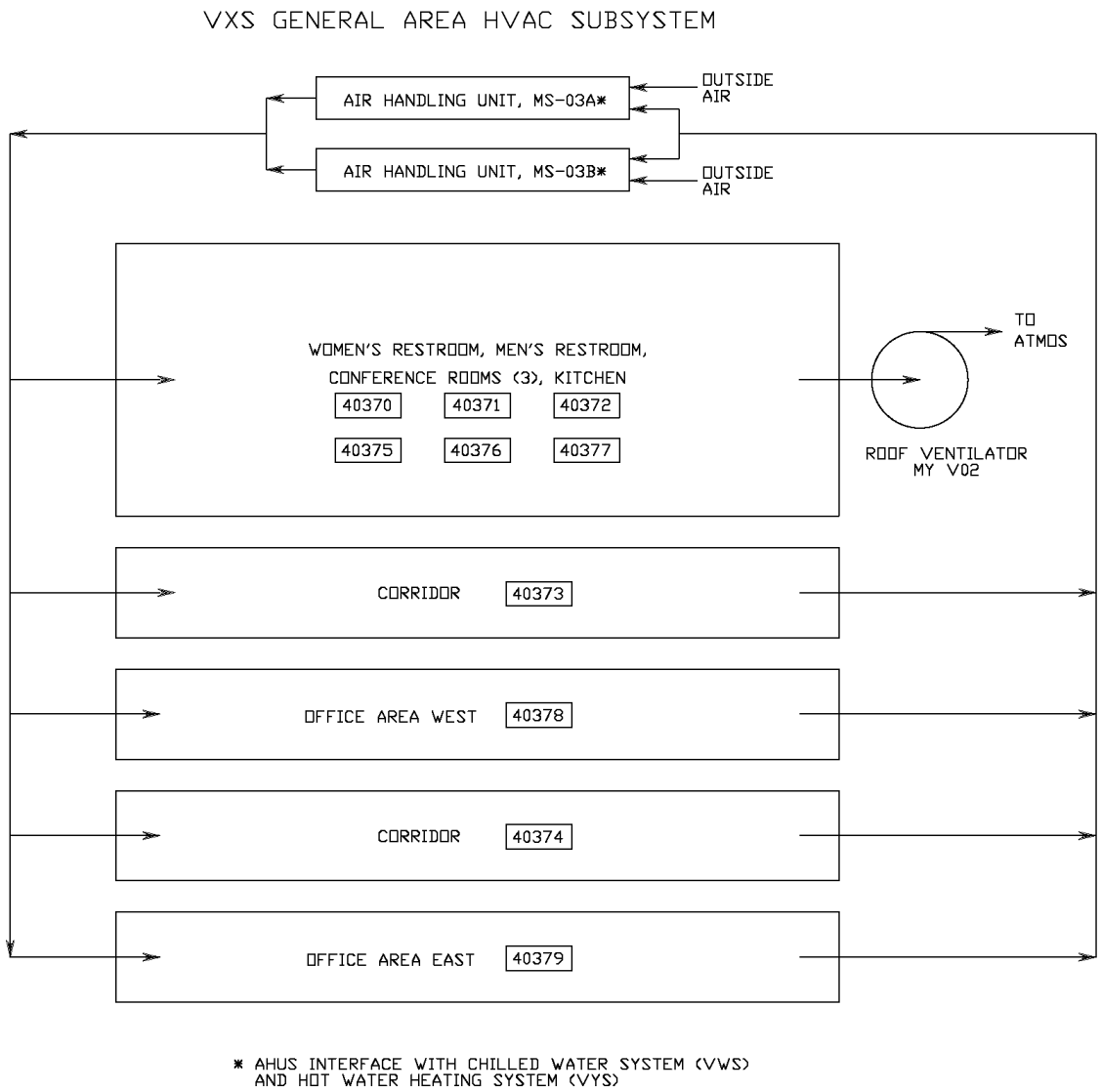

Inside Annex Building

Figure 9.4.2-1 (Sheet 7 of 7)

Figure represents system functional arrangement. Details internal to the system may differ as a result of implementation factors such as vendor-specific component requirements.

Annex/Aux Non-Radioactive Ventilation System Piping and Instrumentation Diagram
(REF) VXS 002

[This page intentionally blank]

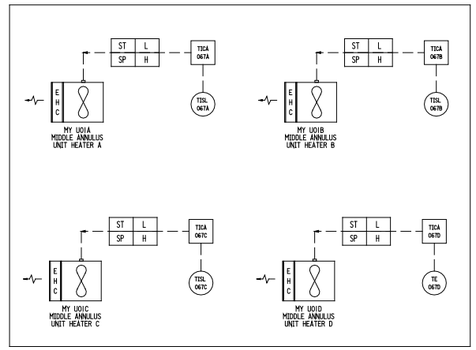

NOTES:

1. THE SYSTEM LOCATOR CODE "APP-VAS" HAS BEEN OMITTED FROM ALL COMPONENT NUMBERS. EXCEPT FOR EQUIPMENT, THE COMPONENT TYPE CODE HAS ALSO BEEN OMITTED.
2. THE DRIP PANS FOR COOLING COILS MY C06A, C06B, C07A C07B, C12A AND C12B ARE CONNECTED TO THE RADIOACTIVE WASTE DRAIN SYSTEM (WRS).

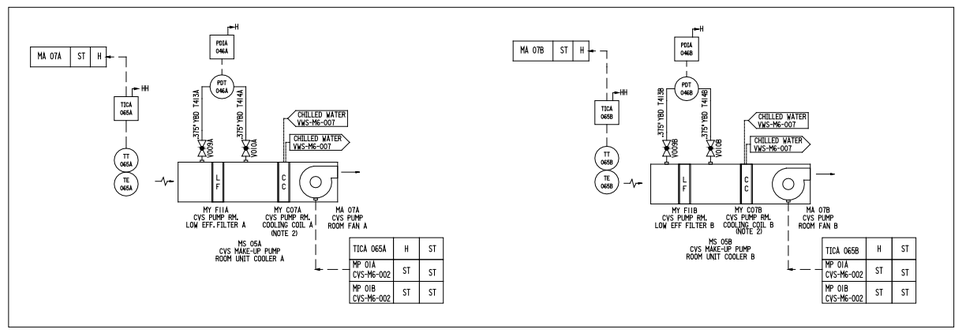

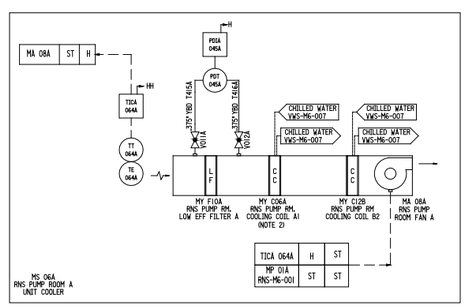

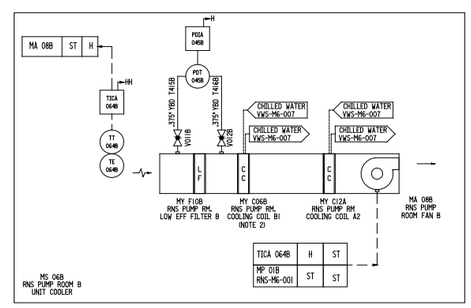

Inside Auxiliary Building

Figure 9.4.3-1 (Sheet 1 of 3)

Radiologically Controlled Ventilation System
Piping and Instrumentation Diagram
(REF) VAS 008

Figure represents system functional arrangement. Details internal to the system may differ as a result of implementation factors such as vendor-specific component requirements.

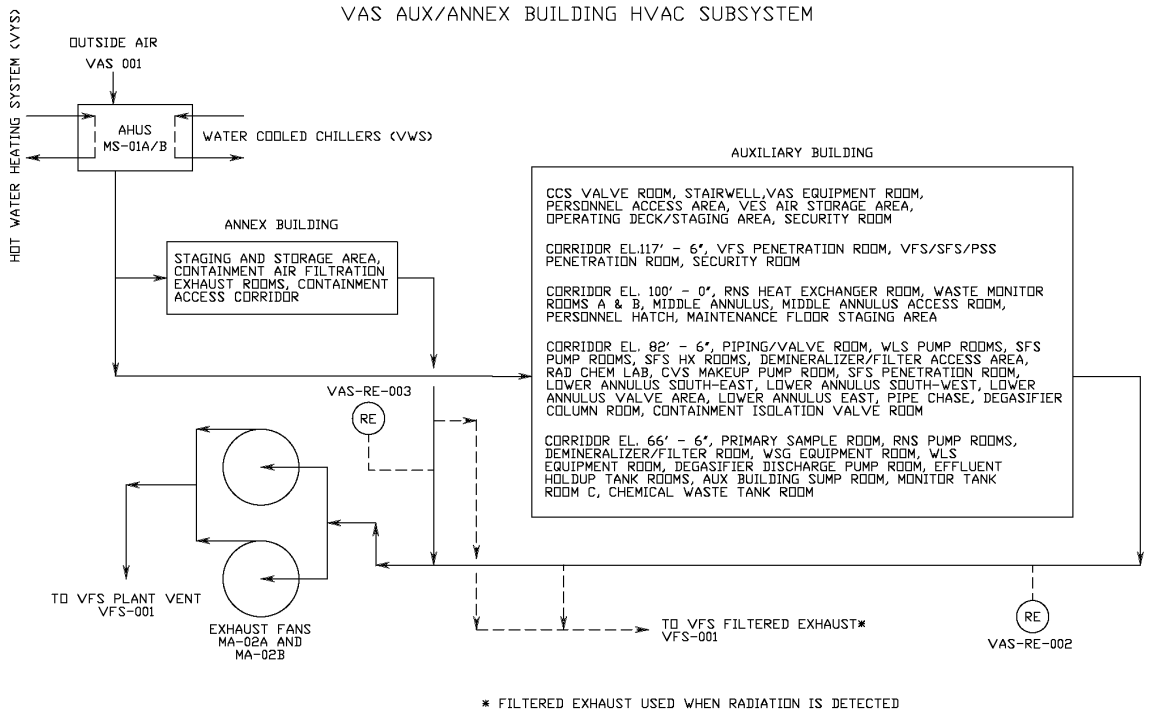

Figure 9.4.3-1 (Sheet 2 of 3)

Figure represents system functional arrangement. Details internal to the system may differ as a result of implementation factors such as vendor-specific component requirements.

Radiologically Controlled Area Ventilation System Piping and Instrumentation Diagram
(REF) VAS 003 & 010

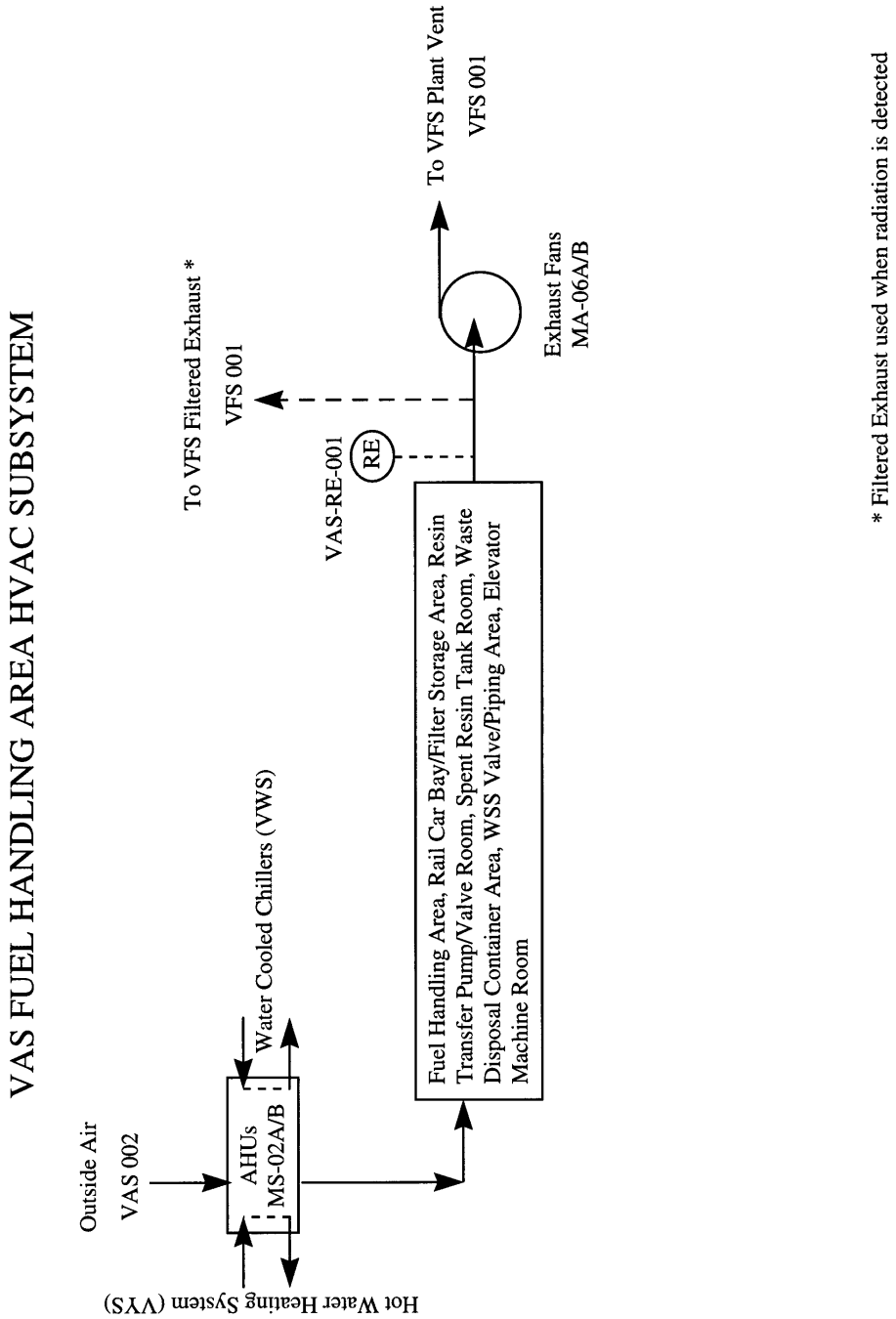

Figure 9.4.3-1 (Sheet 3 of 3)

Figure represents system functional arrangement. Details internal to the system may differ as a result of implementation factors such as vendor-specific component requirements.

Radiologically Controlled Area Ventilation System Piping and Instrumentation Diagram
(REF) VAS 005

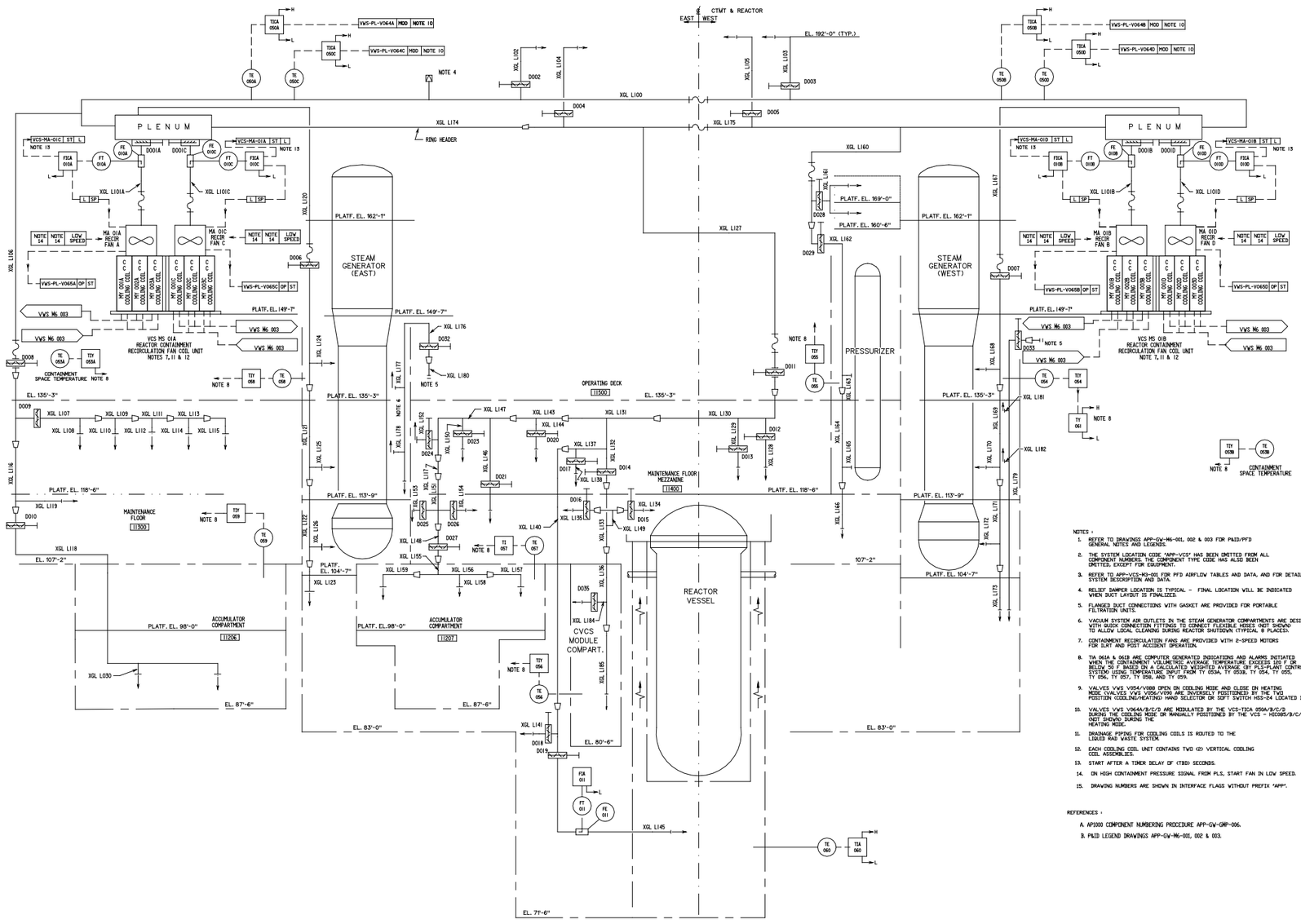

NOTES :

1. REFER TO DRAWINGS APP-GV-M6-001, 002 & 003 FOR P&ID/PFD GENERAL NOTES AND LEGENDS.
2. THE SYSTEM LOCATION CODE 'APP-VCS' HAS BEEN OMITTED FROM ALL COMPONENT NUMBERS. THE COMPONENT TYPE CODE HAS ALSO BEEN OMITTED, EXCEPT FOR EQUIPMENT.
3. REFER TO APP-VCS-M3-001 FOR PFD AIRFLOW TABLES AND DATA, AND FOR DETAILED SYSTEM DESCRIPTION AND DATA.
4. RELIEF DAMPER LOCATION IS TYPICAL - FINAL LOCATION WILL BE INDICATED WHEN DUCT LAYOUT IS FINALIZED.
5. FLANGED DUCT CONNECTIONS WITH GASKET ARE PROVIDED FOR PORTABLE FILTRATION UNITS.
6. VACUUM SYSTEM AIR OUTLETS IN THE STEAM GENERATOR COMPARTMENTS ARE DESIGNED WITH QUICK CONNECTION FITTINGS TO CONNECT FLEXIBLE HOSES (NOT SHOWN) TO ALLOW LOCAL CLEANING DURING REACTOR SHUTDOWN (TYPICAL 8 PLACES).
7. CONTAINMENT RECIRCULATION FANS ARE PROVIDED WITH 2-SPEED MOTORS FOR ILRT AND POST ACCIDENT OPERATION.
8. TIA 061A & 061B ARE COMPUTER GENERATED INDICATIONS AND ALARMS INITIATED WHEN THE CONTAINMENT VOLUMETRIC AVERAGE TEMPERATURE EXCEEDS 120 F OR BELOW 50 F BASED ON A CALCULATED WEIGHTED AVERAGE (BY PLS-PLANT CONTROL SOFTWARE) OF TEMPERATURES FROM TY 053A, TY 053B, TY 054, TY 055, TY 056, TY 057, TY 058, AND TY 059.
9. VALVES VWS V064/V088 (OPEN ON COOLING MODE AND CLOSE ON HEATING MODE (VALVES VWS V056/V090 ARE INVERSELY POSITIONED) BY THE TWO POSITION (COOLING/HEATING) HAND SELECTOR OR SOFT SWITCH HSS-24 LOCATED IN MCR.
10. VALVES VWS V064A/B/C/D ARE MODULATED BY THE VCS-TICA 050A/B/C/D DURING THE COOLING MODE OR MANUALLY POSITIONED BY THE VCS - HICM5/B/C/D (NOT SHOWN) DURING THE HEATING MODE.
11. DRAINAGE PIPING FOR COOLING COILS IS ROUTED TO THE LIQUID RAD WASTE SYSTEM.
12. EACH COOLING COIL UNIT CONTAINS TWO (2) VERTICAL COOLING COIL ASSEMBLIES.
13. START AFTER A TIMER DELAY OF (TBD) SECONDS.
14. ON HIGH CONTAINMENT PRESSURE SIGNAL FROM PLS, START FAN IN LOW SPEED.
15. DRAWING NUMBERS ARE SHOWN IN INTERFACE FLAGS WITHOUT PREFIX 'APP'.

REFERENCES :

A. AP1000 COMPONENT NUMBERING PROCEDURE APP-GW-GMP-006.
B. P&ID LEGEND DRAWINGS APP-GV-M6-001, 002 & 003.

Figure 9.4.6-1

Containment Recirculation Cooling System
Piping and Instrumentation Diagram
(REF) VCS 001

Figure represents system functional arrangement. Details internal to the system may differ as a result of implementation factors such as vendor-specific component requirements.

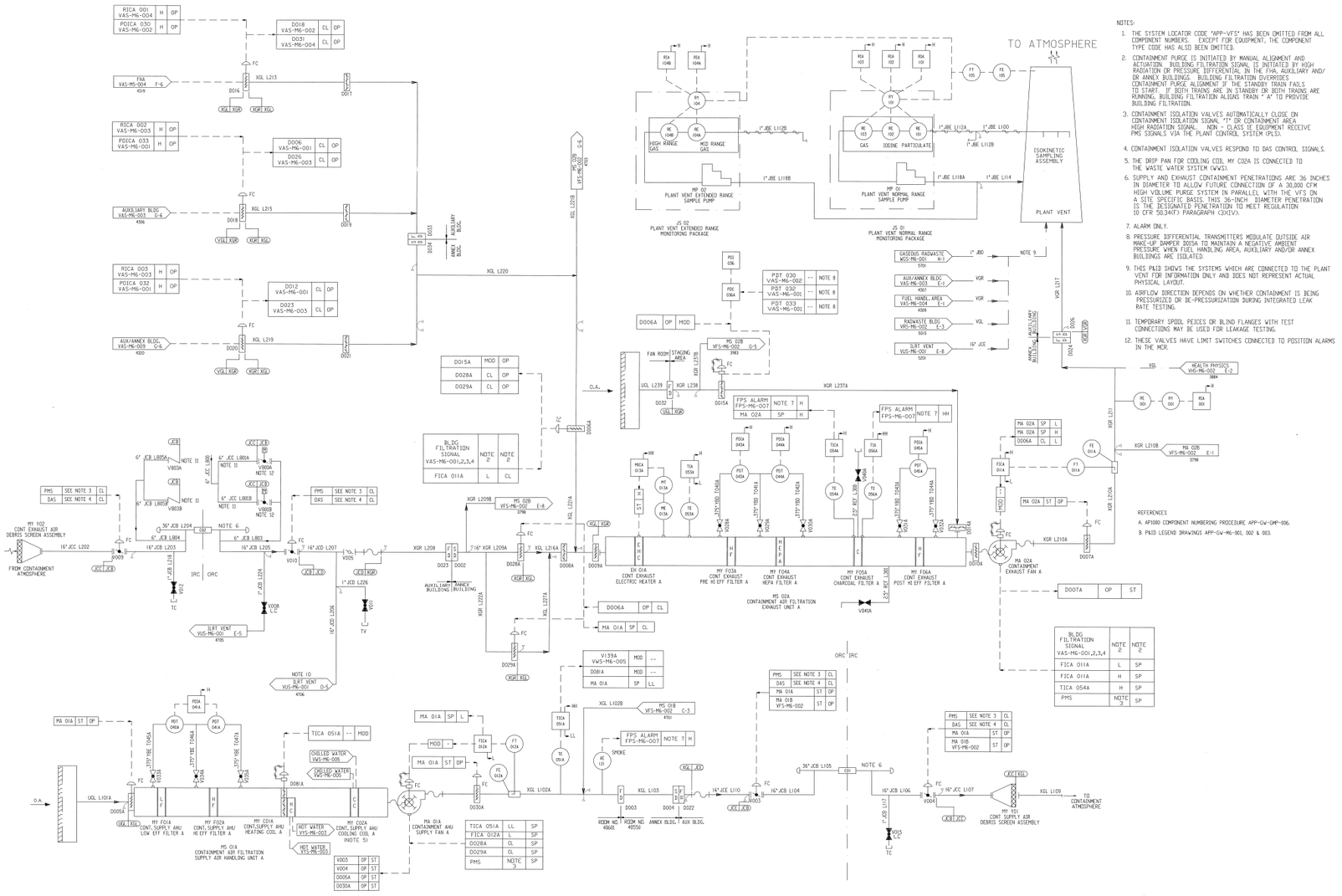

Figure 9.4.7-1 (Sheet 1 of 2)

Figure represents system functional arrangement. Details internal to the system may differ as a result of implementation factors such as vendor-specific component requirements.

Containment Air Filtration System Piping and Instrumentation Diagram
(REF) VFS 001

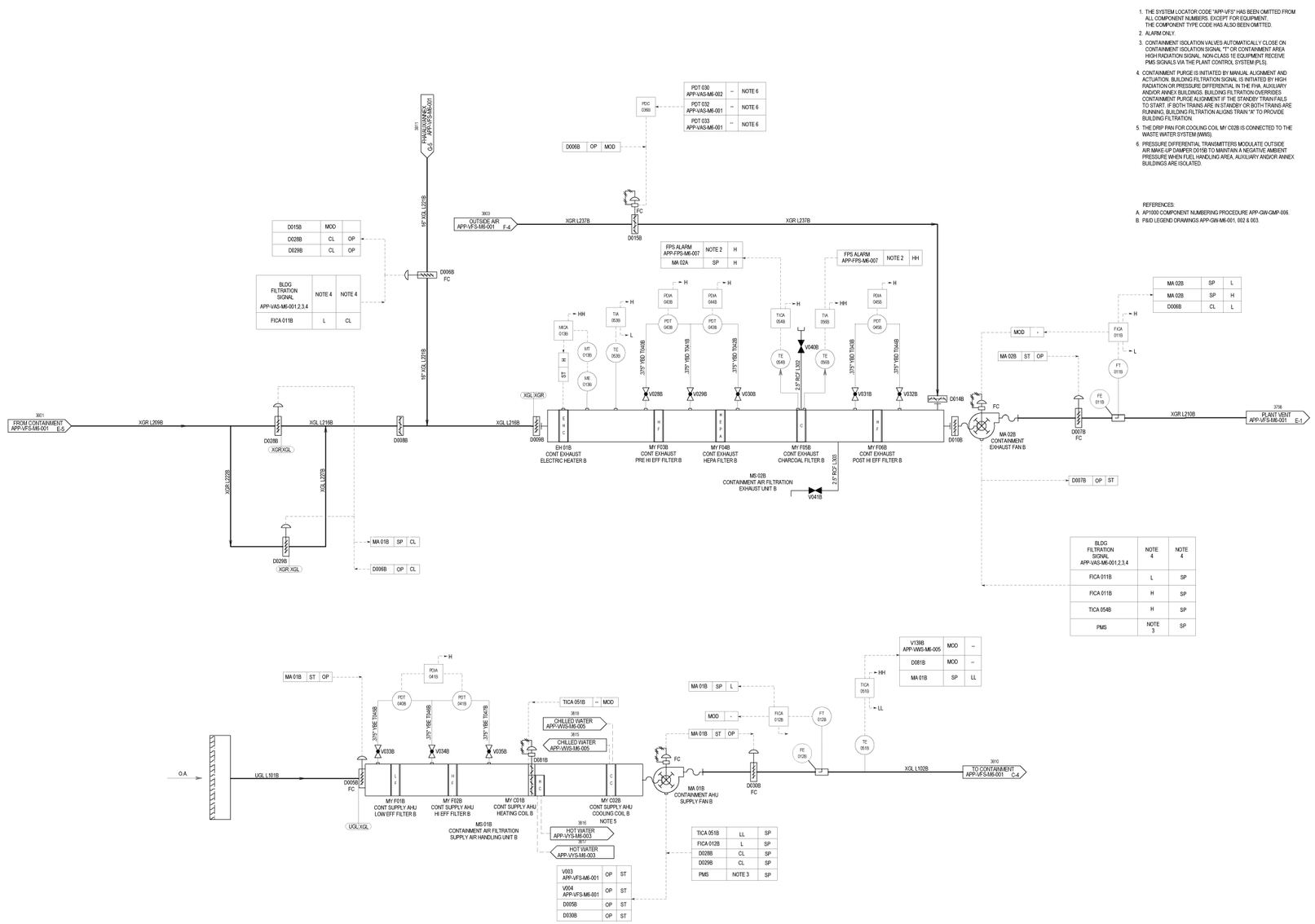

Figure 9.4.7-1 (Sheet 2 of 2)

Containment Air Filtration System Piping and Instrumentation Diagram
(REF) VFS 002

Figure represents system functional arrangement. Details internal to the system may differ as a result of implementation factors such as vendor-specific component requirements.

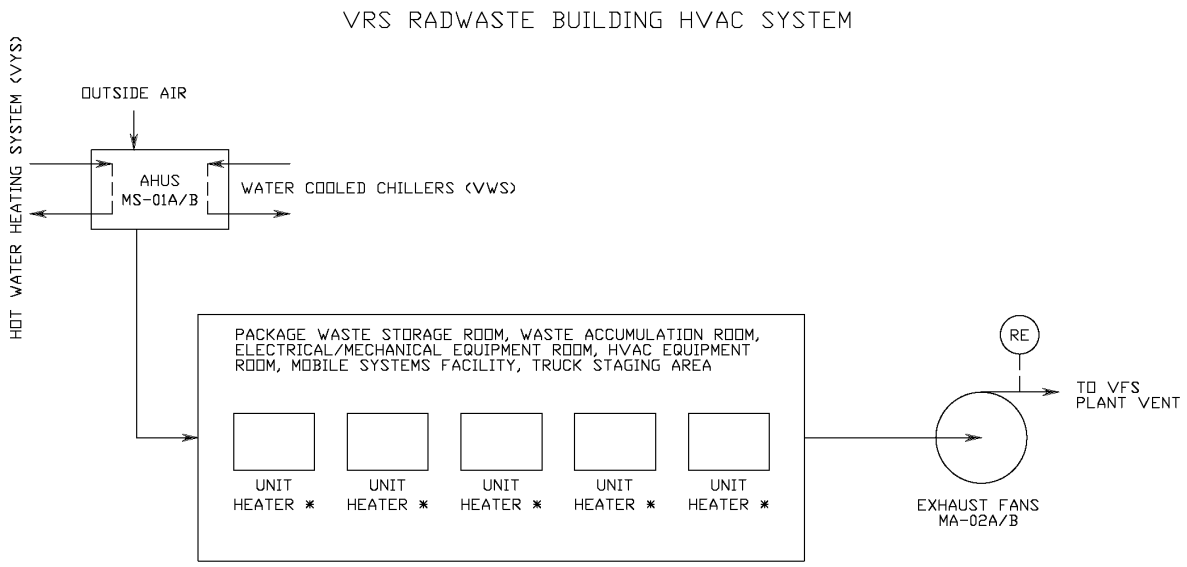

Figure 9.4.8-1

Radwaste Building HVAC System
(REF) VRS 001, 002, 003

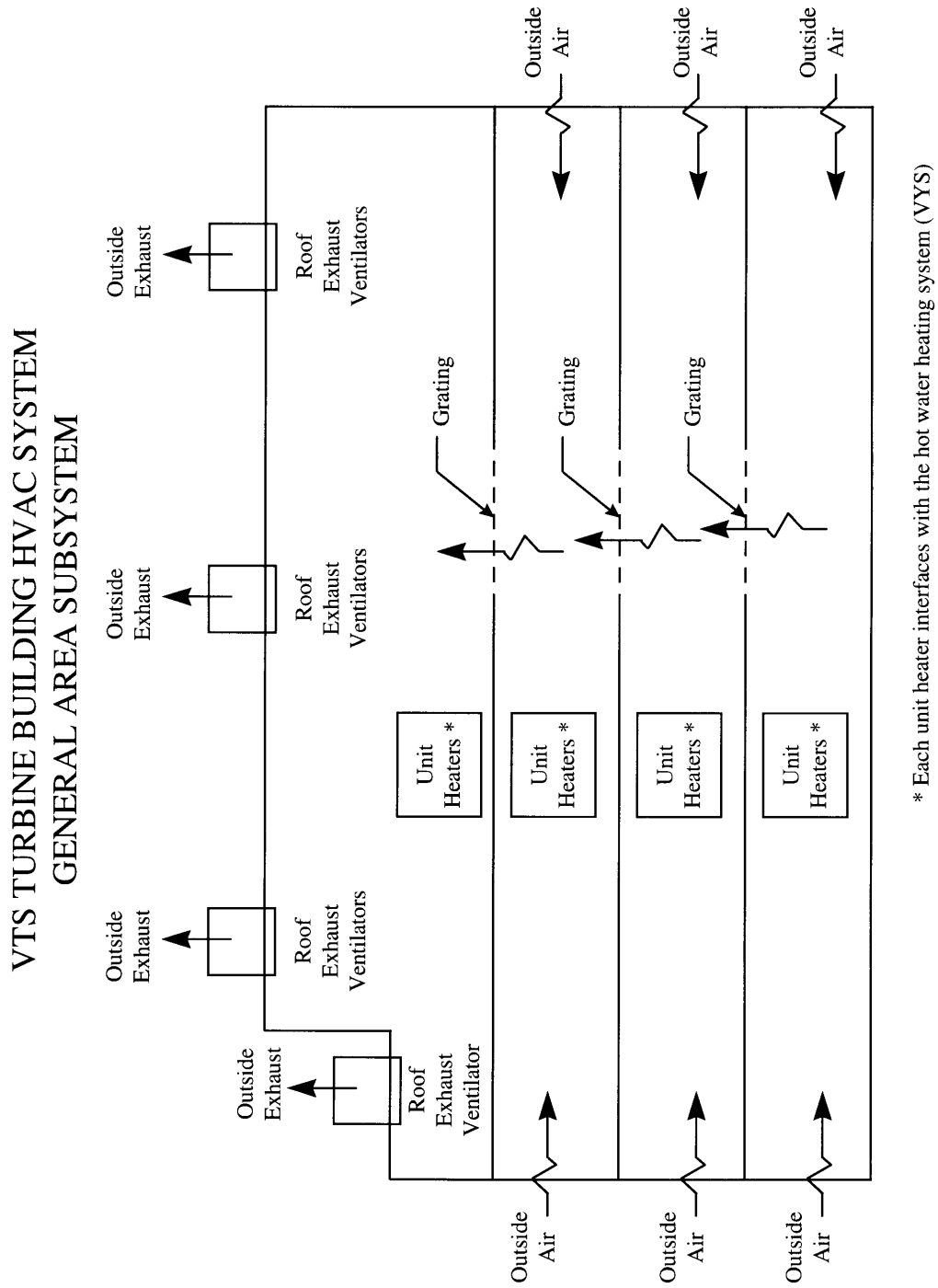

Figure 9.4.9-1

Turbine Building HVAC System
(REF) VTS 001

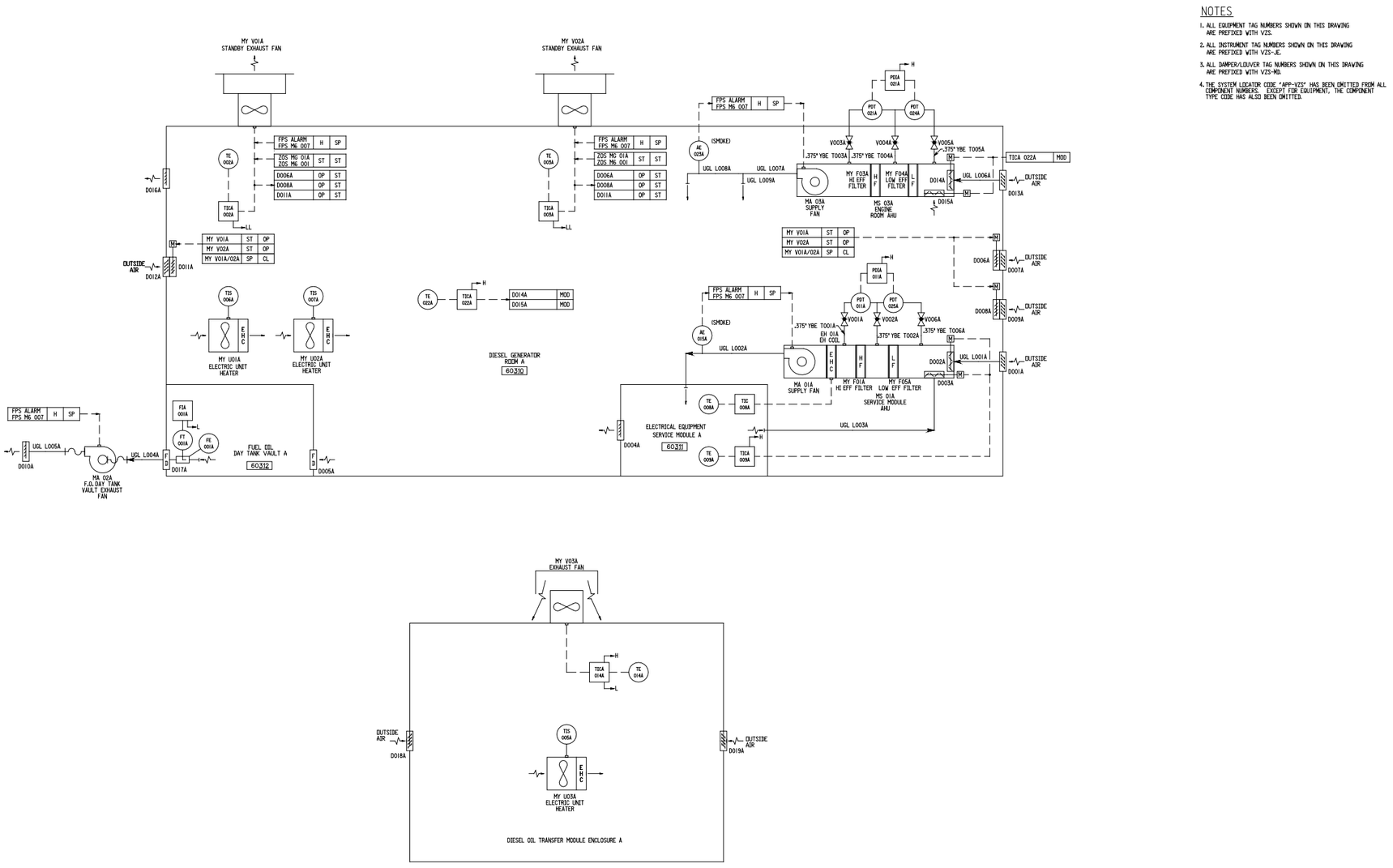

Figure 9.4.10-1 (Sheet 1 of 2)

Diesel Generator Building Heating and Ventilation System Piping and Instrumentation Diagram
(REF) VZS 001

Figure represents system functional arrangement. Details internal to the system may differ as a result of implementation factors such as vendor-specific component requirements.

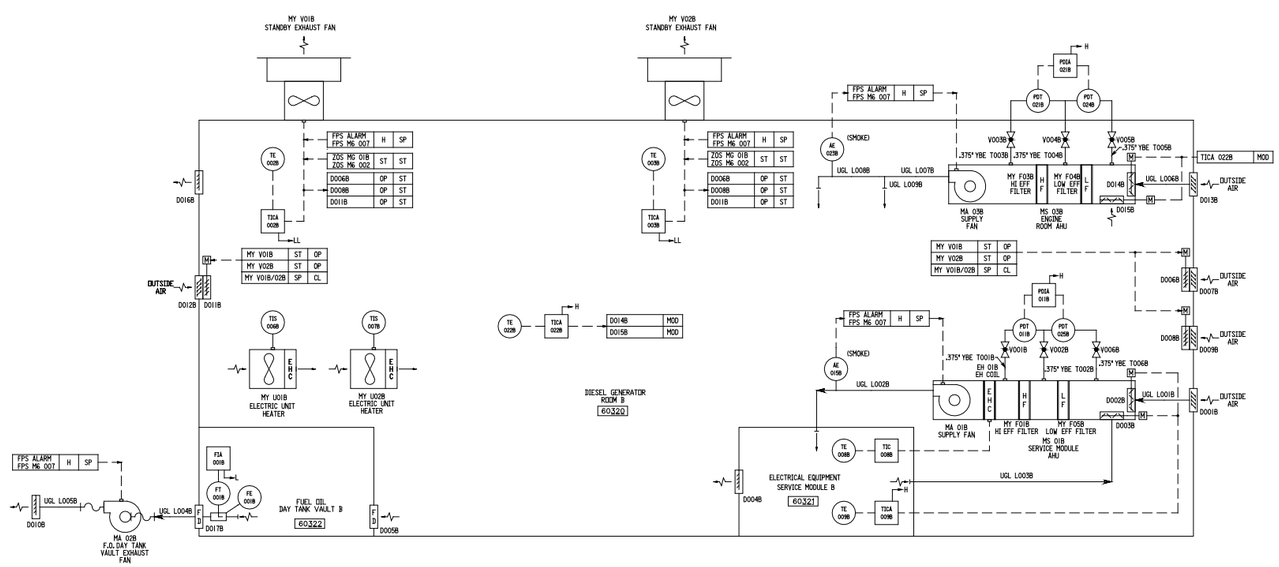

NOTES

1. ALL EQUIPMENT TAG NUMBERS SHOWN ON THIS DRAWING ARE PREFIXED WITH VZS.
2. ALL INSTRUMENT TAG NUMBERS SHOWN ON THIS DRAWING ARE PREFIXED WITH VZS-JE.
3. ALL DAMPER/LOUVER TAG NUMBERS SHOWN ON THIS DRAWING ARE PREFIXED WITH VZS-MD.
4. THE SYSTEM LOCATOR CODE "APP-VZS" HAS BEEN OMITTED FROM ALL COMPONENT NUMBERS. EXCEPT FOR EQUIPMENT, THE COMPONENT TYPE CODE HAS ALSO BEEN OMITTED.

Figure 9.4.10-1 (Sheet 2 of 2)

Diesel Generator Building Heating and Ventilation System Piping and Instrumentation Diagram
(REF) VZS 002

Figure represents system functional arrangement. Details internal to the system may differ as a result of implementation factors such as vendor-specific component requirements.

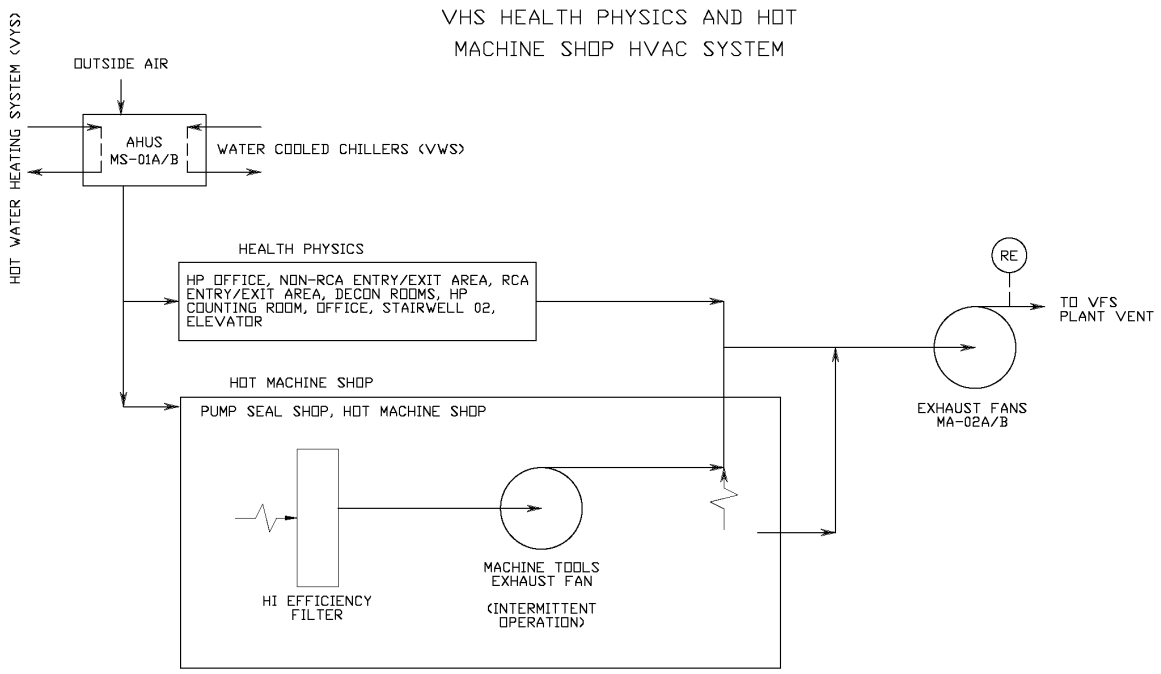

Figure 9.4.11-1

Health Physics and Hot Machine Shop HVAC System
(REF) VHS 001, 002, 003