11.2 Liquid Waste Management Systems

The liquid waste management systems include the systems that may be used to process and dispose of liquids containing radioactive material. These include the following:

- Steam generator blowdown processing system (subsection 10.4.8);
- Radioactive waste drain system (subsection 9.3.5);
- Liquid radwaste system (WLS) (Section 11.2).

This section primarily addresses the liquid radwaste system. The other systems are also addressed in subsection 11.2.3, which discusses the expected releases from the liquid waste management systems.

The liquid radwaste system is designed to control, collect, process, handle, store, and dispose of liquid radioactive waste generated as the result of normal operation, including anticipated operational occurrences.

11.2.1 Design Basis

Subsection 1.9.1 discusses the conformance of the liquid radwaste system design with the criteria of Regulatory Guide 1.143.

11.2.1.1 Safety Design Basis

The liquid radwaste system serves no safety-related functions except for:

- Containment isolation; see subsection 6.2.3.

- Draining the passive core cooling system compartments to the containment sump to prevent flooding of these compartments and possible immersion of safety-related components.

- Back flow prevention check valves in the drain lines from the chemical and volume control system compartment and the passive core cooling system compartments to the containment sump, which prevent cross flooding of these compartments. Each drain line has two check valves in series so that a single failure does not compromise the back flow prevention safety function. See subsection 6.3.3.3.2 for a discussion of containment flooding.

11.2.1.2 Power Generation Design Basis

11.2.1.2.1 Capacity

The liquid radwaste system provides holdup capacity as shown in Table 11.2-2, and permanently installed processing capacity of 75 gpm through the ion exchange/filtration train. This is adequate capacity to meet the anticipated processing requirements of the plant. The projected flows of various liquid waste streams to the liquid radwaste system under normal conditions are identified in Table 11.2-1.

The liquid radwaste system design can accept equipment malfunctions without affecting the capability of the system to handle both anticipated liquid waste flows and possible surge load due to excessive leakage. Table 11.2-4 contains information on the surge capacity of individual tanks.

Portions of the liquid radwaste system may become unavailable as a result of the malfunctions listed in subsection 11.2.1.2.2.

Ample surge capacity of the system, provisions for using mobile processing equipment and the low load factor of the processing equipment permits the system to accommodate waste until failures can be repaired and normal plant operation resumed. In addition, the liquid radwaste system is designed to accommodate the anticipated operational occurrences described in subsection 11.2.1.2.3.

11.2.1.2.2 Failure Tolerance

11.2.1.2.2.1 Pump Failure

Where operation is not essential and surge capacity is available, a single pump is provided. This applies to most applications in the liquid radwaste system. Two reactor coolant drain tank pumps and two containment sump pumps are provided because the relative inaccessibility of the containment during power operation would hinder maintenance. The containment sump pumps are submersible pumps with permanently lubricated bearings and mechanical seals. To protect them from damage due to loss of suction, each pump is interlocked to stop on a low level condition in the sump. The reactor coolant drain tank pumps are vertical sump type pumps with motors above the reactor coolant drain tank shaft coupled to pumps submersed in the liquid within the reactor coolant drain tank. This arrangement minimizes contamination of the motors and permits removal and maintenance of the motors outside of the radiation area.

Process pumps located outside containment are air-operated, double diaphragm type. These pumps are capable of significant suction lifts, and can thus be located on or near the top of the associated waste tank, with internal suction piping. They can pump slurries with high solids fractions, run deadheaded, and run dry without damage. In addition, they can operate over a wide range of hydraulic conditions by varying the driving air input. This makes it possible to fulfill many different applications with a single pump model, thereby facilitating maintenance and reducing the inventory of spare parts.

11.2.1.2.2.2 Filter or Ion Exchanger Plugging

Instrumentation is provided to give indication of the pressure drop across filters and ion exchangers. Periodic checks of the pressure drops provide indication of equipment fouling, thus permitting corrective action to be taken before an excessive pressure drop is reached. Change of filter cartridges and ion exchange beds is expected to occur based upon radiation survey.

11.2.1.2.3 Anticipated Operational Occurrences

11.2.1.2.3.1 High Primary Coolant System Leakage Rate

The system is designed to handle an abnormal primary coolant system leak in addition to the expected leakage during normal operation. Operation of the system is the same as for normal operation, except that the load on the system is increased.

11.2.1.2.3.2 High Use of Decontamination Water

If large quantities of water are used to decontaminate areas or equipment, the load on the liquid radwaste system is increased. However, the liquid radwaste system is designed to handle a large, continuous input to the waste holdup tanks. If the water can be discharged without processing based on sampling which shows acceptably low activity, the overall liquid radwaste system capacity is increased.

To accommodate the possible use of special decontamination fluids or very large volumes of decontamination fluids, mobile equipment is used as discussed in subsection 11.2.1.2.5.2.

11.2.1.2.3.3 Steam Generator Tube Leakage

During normal operations, steam generator blowdown is returned to the condensate system, as described in subsection 10.4.8. However, if excessive radioactivity is detected, the blowdown is diverted to the liquid radwaste system for processing and disposal.

The blowdown fluid is brought into the waste holdup tanks, which provide some surge capacity to hold the fluid during processing. It is then processed in the same fashion as, and combined with, other inputs.

In the event of a steam generator tube rupture, the condensate storage tank may also become contaminated. In this event, the tank is cleaned by the use of temporary equipment brought to the site for the purpose, as described in subsection 11.2.1.2.5.2.

11.2.1.2.3.4 Refueling

The load on the liquid radwaste system is expected to increase during refueling because of the increased level of maintenance activities in the plant, but operation is the same as for normal plant operation. There is no significant effect on the performance capability of the liquid radwaste system.

11.2.1.2.4 Controlled Release of Radioactivity

The liquid radwaste system provides the capability to reduce the amounts of radioactive nuclides released in the liquid wastes through the use of demineralization and time delay for decay of short-lived nuclides.

The assumed equipment decontamination factors appear in Table 11.2-5. Estimates of the radioactive source terms and annual average flow rate that will be processed in the liquid radwaste system or discharged to the environment during normal operation appear in Table 11.2-1.

Before radioactive liquid waste is discharged, it is pumped to a monitor tank. A sample of the monitor tank contents is analyzed, and the results are recorded. In this way, a record is kept of planned releases of radioactive liquid waste.

The liquid waste is discharged from the monitor tank in a batch operation, and the discharge flow rate is restricted as necessary to maintain an acceptable concentration when diluted by the circulating water discharge flow. These provisions preclude uncontrolled releases of radioactivity.

In addition, the discharge line contains a radiation monitor with diverse methods of stopping the discharge. The first method closes an isolation valve in the discharge line, which prevents any further discharge from the liquid radwaste system. The valve automatically closes and an alarm is actuated if the activity in the discharge stream reaches the monitor setpoint. The second method stops the monitor tank pumps.

To minimize leakage from the liquid radwaste system, the system is of welded construction except where flanged connections are required to facilitate component maintenance or to allow connection of temporary or mobile equipment. Air-operated diaphragm pumps or pumps having mechanical seals are used. These pumps minimize system leakage thereby minimizing the release of radioactive gas that might be entrained in the leaking fluid to the building atmosphere.

Provisions are made to control spills of radioactive liquids due to tank overflows. Table 11.2-3 lists the provisions for tank level indication, alarms, and overflow disposition for liquid radwaste system tanks outside containment. In addition, the radioactive waste collection tanks (i.e., the effluent holdup tanks, waste holdup tanks, and chemical tank) are located within the auxiliary building, which is well sealed and equipped with an extensive floor drain system. The radwaste monitor tanks are located in the auxiliary building and in the radwaste building, which has a well sealed, contiguous basemat with integral curbing and a floor drain system. Routing of both of the auxiliary building and radwaste building floor drain systems are to the liquid radwaste system. This eliminates the potential for undetected tank leakage to the environment and supports compliance with 10 CFR 20.1406 (Reference 5).

The liquid radwaste system is designed so that the annual average concentration limits established by 10 CFR 20 (Appendix B, table 2, column 2) (Reference 1) for liquid releases are not exceeded during plant operation. Subsection 11.2.3 describes the calculated releases of radioactive materials from the liquid radwaste system and other portions of the liquid waste management systems resulting from normal operation.

The monitored radwaste discharge pipeline is engineered to preclude leakage to the environment. This pipe is routed from the auxiliary building to the radwaste building (the short section of pipe between the two buildings is fully available for visual inspection as noted above) and then out of the radwaste building to the licensed release point for dilution and discharge. The discharge radiation monitor and isolation valve are located inside the radiologically controlled area. The exterior piping is designed to preclude inadvertent or unidentified releases to the environment; it is

either enclosed within a guard pipe and monitored for leakage, or accessible for visual inspection. No valves or vacuum breakers are incorporated outside of monitored structures. This greatly reduces the potential for undetected leakage from this discharge to the environment at a non-licensed release point, and supports compliance with 10 CFR 20.1406 (Reference 5).

11.2.1.2.4.1 Abnormal Operation

Subsections 11.2.1.2.2 and 11.2.1.2.3 describe the capability of the liquid radwaste system to accommodate abnormal conditions for various equipment and other anticipated operational occurrences. During these anticipated occurrences, the effectiveness of the liquid radwaste system in controlling releases of radioactivity remains unaffected, so releases are limited as during normal operation.

Subsection 11.2.3 discusses the calculated releases of radioactive materials from the liquid radwaste system for abnormal situations.

11.2.1.2.5 Equipment Design

11.2.1.2.5.1 Permanently Installed Equipment

The liquid radwaste system equipment design parameters are provided in Table 11.2-2.

The seismic design classification and safety classification for the liquid radwaste system components and structures are listed in Section 3.2. The components listed are located in the Seismic Category I Nuclear Island and in the radwaste building.

The monitor tanks in the non-seismic radwaste building are used to store processed water. The radioactivity content of processed water in each tank will be less than the A_1 and A_2 levels of 10 CFR 71 Appendix A, Table A-1.

11.2.1.2.5.2 Use of Mobile and Temporary Equipment

The liquid radwaste system is designed to handle most liquid effluents and other anticipated events using installed equipment. However, for events occurring at a very low frequency or producing effluents not compatible with the installed equipment, temporary equipment may be brought into the radwaste building mobile treatment facility truck bays.

Connections are provided to and from various locations in the liquid radwaste system to these mobile equipment connections. This allows the mobile equipment to be used in series with installed equipment, as an alternate to it with the treated liquids returned to the liquid radwaste system, or as an ultimate disposal point for liquids that are to be removed from the plant site for disposal elsewhere.

The use of temporary equipment is common practice in operating plants. The radwaste building truck bays and laydown space for mobile equipment, in addition to the flexibility of numerous piping connections to the liquid radwaste system, allow the plant operator to incorporate mobile equipment in an integrated fashion.

Temporary equipment is also used to clean up the condensate storage tank if it becomes contaminated following steam generator tube leakage. This use of temporary equipment is similar to that just described, except that the equipment is used in the yard rather than in the radwaste building truck bays.

11.2.1.3 Compliance with 10 CFR 20.1406

In accordance with the requirements of 10 CFR 20.1406 (Reference 5), the liquid radwaste system is designed to minimize, to the extent practicable, contamination of the facility and the environment, facilitate decommissioning, and minimize, to the extent practicable, the generation of radioactive waste. This is done through appropriate selection of design technology for the system, and incorporation of the ability to update the system to use the best available technology throughout the life of the plant.

11.2.2 System Description

The liquid radwaste system, shown in Figure 11.2-1, includes tanks, pumps, ion exchangers, and filters. The liquid radwaste system is designed to process, or store for processing by mobile equipment, radioactively contaminated wastes in four major categories:

- Borated, reactor-grade, waste water – this input is collected from the reactor coolant system (RCS) effluents received through the chemical and volume control system (CVS), primary sampling system sink drains and equipment leakoffs and drains.

- Floor drains and other wastes with a potentially high suspended solids content – this input is collected from various building floor drains and sumps.

- Detergent wastes – this input comes from the plant hot sinks and showers, and some cleanup and decontamination processes. It generally has low concentrations of radioactivity.

- Chemical waste – this input comes from the laboratory and other relatively small volume sources. It may be mixed hazardous and radioactive wastes or other radioactive wastes with a high dissolved-solids content.

Nonradioactive secondary-system waste is not processed by the liquid radwaste system. Secondary-system effluent is normally handled by the steam generator blowdown processing system, as described in subsection 10.4.8, and by the turbine building drain system.

Radioactivity can enter the secondary systems from steam generator tube leakage. If significant radioactivity is detected in secondary-side systems, blowdown is diverted to the liquid radwaste system for processing and disposal.

11.2.2.1 Waste Input Streams

11.2.2.1.1 Reactor Coolant System Effluents

The effluent subsystem receives borated and hydrogen-bearing liquid from two sources: the reactor coolant drain tank and the chemical and volume control system. The reactor coolant drain

tank collects leakage and drainage from various primary systems and components inside containment. Effluent from the chemical and volume control system is produced mainly as a result of reactor coolant system heatup, boron concentration changes and RCS level reduction for refueling.

Input collected by the effluent subsystem normally contains hydrogen and dissolved radiogases. Therefore, it is routed through the liquid radwaste system vacuum degasifier before being stored in the effluent holdup tanks.

The liquid radwaste system degasifier can also be used to degas the reactor coolant system before shutdown by operating the chemical and volume control system in an open loop configuration. This is done by taking one of the effluent holdup tanks out of normal waste service and draining it. Then normal chemical and volume control system letdown is directed through the degasifier to the dedicated effluent holdup tank. From there, it is pumped back to the suction of the chemical and volume control system makeup pumps with the effluent holdup tank pump. The makeup pumps return the fluid to the reactor coolant system in the normal fashion. This process is continued as necessary for degassing the reactor coolant system as described in subsection 9.3.6.

The input to the reactor coolant drain tank is potentially at high temperature. Therefore, provisions are made for recirculation through a heat exchanger for cooling. The tank is inerted with nitrogen and is vented to the gaseous radwaste system. Transfer of water from the reactor coolant drain tank is controlled to maintain an essentially fixed tank level to minimize tank pressure variation.

Reactor coolant system effluents from the chemical and volume control system letdown line or the reactor coolant drain subsystem pass through the vacuum degasifier, where dissolved hydrogen and fission gases are removed. These gaseous components are sent via a water separator to the gaseous radwaste system. A degasifier discharge pump then transfers the liquid to the currently selected effluent holdup tank. If flows from the letdown line and the reactor coolant drain tank are routed to the degasifier concurrently, the letdown flow has priority and the drain tank input is automatically suspended.

In the event of abnormally high degasifier water level, inputs are automatically stopped by closing the letdown control and containment isolation valves.

The effluent holdup tanks vent to the radiologically controlled area ventilation system and, in abnormal conditions, may be purged with air to maintain a low hydrogen gas concentration in the tanks' atmosphere. Hydrogen monitors are included in the tanks vent lines to alert the operator of elevated hydrogen levels.

The contents of the effluent holdup tanks may be recirculated and sampled, recycled through the degasifier for further gas stripping, returned to the reactor coolant system via the chemical and volume control system makeup pumps, discharged to the mobile treatment facility, processed through the ion exchangers, or directed to the monitor tanks for discharge without treatment.

Processing through the ion exchangers is the normal mode.

The AP1000 liquid radwaste system processes waste with an upstream filter followed by four ion exchange resin vessels in series. Any of these vessels can be manually bypassed and the order of the last two can be interchanged, so as to provide complete usage of the ion exchange resin.

The top of the first vessel is normally charged with activated carbon, to act as a deep-bed filter and remove oil from floor drain wastes. Moderate amounts of other wastes can also be routed through this vessel. It can be bypassed for processing of relatively clean waste streams. This vessel is somewhat larger than the other three, with an extra sluice connection to allow the top bed of activated carbon to be removed. This feature is associated with the deep bed filter function of the vessel; the top layer of activated carbon collects particulates, and the ability to remove it without disturbing the underlying zeolite bed minimizes solid-waste production.

The second, third and fourth beds are in identical ion exchange vessels, which are selectively loaded with resin, depending on prevailing plant conditions.

After deionization, the water passes through an after-filter where radioactive particulates and resin fines are removed. The processed water then enters one of the monitor tanks. When one of the monitor tanks is full, the system is automatically realigned to route processed water to another tank.

The contents of the monitor tank are recirculated and sampled. In the unlikely event of radioactivity in excess of operational targets, the tank contents are returned to a waste holdup tank for additional processing.

Normally, however, the radioactivity will be well below the discharge limits, and the dilute boric acid is discharged for dilution to the circulating water blowdown. The discharge flow rate is set to limit the boric acid concentration in the circulating water blowdown stream to an acceptable concentration for local requirements. Detection of high radiation in the discharge stream stops the discharge flow and operator action is required to re-establish discharge. The raw water system which provides makeup for the circulating water system is used as a backup source for dilution water when cooling tower blowdown is not available for the discharge path.

11.2.2.1.2 Floor Drains and Other Wastes with Potentially High Suspended Solid Contents

Potentially contaminated floor drain sumps and other sources that tend to be high in particulate loading are collected in the waste holdup tank. Additives may be introduced to the tank to improve filtration and ion exchange processes. Tank contents may be recirculated for mixing and sampling. The tanks have sufficient holdup capability to allow time for realignment and maintenance of the process equipment.

The waste water is processed through the waste pre-filter to remove the bulk of the particulate loading. Next it passes through the ion exchangers and the waste after-filter before entering a monitor tank. The monitor tank contents are sampled and, if necessary, returned to a waste holdup tank or recirculated directly through the filters and ion exchangers.

Waste water meeting the discharge limits is discharged to the circulating water blowdown through a radiation detector that stops the discharge if high radiation is detected.

11.2.2.1.3 Detergent Wastes

The detergent wastes from the plant hot sinks and showers contain soaps and detergents. These wastes are generally not compatible with the ion exchange resins described in subsections 11.2.2.1.1 and 11.2.2.1.2. The detergent wastes are not processed and are collected in the chemical waste tank. If the detergent wastes activity is low enough, the wastes can be discharged without processing.

When sufficient detergent wastes are produced and processing is necessary, mobile processing equipment is brought into one of the radwaste building mobile systems facility truck bays provided for this purpose.

11.2.2.1.4 Chemical Wastes

Inputs to the chemical waste tank normally are generated at a low rate. These wastes are only collected; no internal processing is provided. Chemicals can be added to the tank for pH or other adjustment. Since the volume of these wastes is low, they can be treated by the use of mobile equipment or by shipment offsite.

11.2.2.1.5 Steam Generator Blowdown

Steam generator blowdown is normally accommodated within the steam generator blowdown system, which is described in subsection 10.4.8.

If steam generator tube leakage results in significant levels of radioactivity in the steam generator blowdown stream, this stream is redirected to the liquid radwaste system for treatment before release. In this event, one of the waste holdup tanks is drained to prepare it for blowdown processing. The blowdown stream is brought into that holdup tank, and continuously or in batches pumped through the waste ion exchangers. The number of ion exchangers in service is determined by the operator to provide adequate purification without excessive resin usage. The blowdown is then collected in a monitor tank, sampled, and discharged in a monitored fashion.

11.2.2.2 Other Operations

11.2.2.2.1 Sampling

Grab sampling taps are provided where required to monitor influent boron and radioactivity concentrations; to monitor performance of various components; to determine tank water characteristics before transfer, processing or discharge; to verify performance of the on-line analyzers; and to collect samples of discharges to the environs for analysis and documentation. Samples are taken in low radiation areas.

11.2.2.2.2 Tank Cleaning

Extraordinary measures for tank cleaning are not normally required because the pumps take suction from the low point of the tank, and the tank bottoms are sloped so that the tank can be fully drained. Recirculation connections are provided to allow the tanks to be effectively mixed.

Also, the air-operated double-diaphragm pumps used can pump air, water or slurries without damage, and can run dry to clear the bottoms of the tanks.

Provisions are made for tank cleaning using a portable tank cleaning rig. Suction is taken from the tank bottom via a temporary hose. The pump discharge passes through a filter and the hose to a tank cleaning lance, which is manually inserted through a manway on the tank. The operator can direct the high-velocity water throughout the inside of the tank.

11.2.2.3 Component Description

The general descriptions and summaries of the design basis requirements for the liquid radwaste system components follow. Table 11.2-2 contains the operating parameters for the liquid radwaste system components.

Additional information regarding the applicable codes and classifications is also available in Section 3.2.

11.2.2.3.1 Liquid Radwaste System Pumps

Reactor Coolant Drain Tank Pumps

Two full-capacity, stainless steel, reactor coolant drain tank pumps recirculate the reactor coolant drain tank contents for cooling and to discharge the reactor coolant drain tank contents to the degasifier or to an effluent holdup tank. These vertical sump pumps have permanently lubricated bearings and mechanical seals. The pumps start and stop on high and low level.

Containment Sump Pumps

Two full-capacity containment sump pumps are provided. These pumps discharge the containment sump contents to the waste holdup tank. These submersible sump pumps have permanently lubricated bearings and mechanical seals. The pumps start and stop on high and low level.

Degasifier Vacuum Pumps

Two stainless steel, full-capacity, liquid ring type, degasifier vacuum pumps maintain the degasifier at a low pressure for efficient gas stripping.

These liquid ring pumps use water as the compressant. The water is recycled to minimize consumption. Excess water from vapor condensation is discharged to an effluent holdup tank.

Degasifier Separator Pump

Two full capacity centrifugal pumps are provided to discharge recovered compressor water from the degasifier separator back to the degasifier vacuum pumps. The pump also serves to discharge any excess compressor water accumulation in the separator to an effluent holdup tank. The pumps start and stop to share the duty. The pump is constructed of stainless steel and has a mechanical seal.

Other Pumps

The following air-operated double-diaphragm pumps are mounted near the associated tanks with internal suction piping. Construction is of stainless steel, with elastomeric diaphragms.

- Degasifier discharge pumps (2)
- Effluent holdup tank pumps (2)
- Waste holdup tank pumps (2)
- Monitor tank pumps (6)
- Chemical waste tank pump (1)

11.2.2.3.2 Liquid Radwaste System Heat Exchangers

Reactor Coolant Drain Tank Heat Exchanger

One horizontal U-tube heat exchanger is provided. The heat exchanger has a flanged tubesheet that permits removal of the tube bundle for inspection and cleaning.

The heat exchanger is designed to prevent the reactor coolant drain tank contents from boiling with hot leakage influent as shown in Table 11.2-4.

The reactor coolant drain tank contents flow through the tubes which are stainless steel component cooling water flows through the carbon steel shell.

Vapor Condenser

One horizontal U-tube heat exchanger assists in drying the gases drawn out of the liquid waste by the vacuum pump, before they are sent to the gaseous radwaste system. As the gas bearing water cascades down through the packing in the degasifier vessel, it boils in the low pressure. To minimize the size of the vacuum pumps, a vapor condenser is provided between the degasifer vessel and the vacuum pumps. In the vapor condenser, most of the water vapor is condensed out of the gas stream before it enters the vacuum pump. The vapor condenser is cooled by chilled water. Chilled water flows through the tubes, which are stainless steel. Water vapor condenses on the tubes and drains through a subcooling section in the stainless steel shell. The non-condensible gases and condensate are recombined in a common pipe leading to the suction of the liquid ring type vacuum pumps.

11.2.2.3.3 Liquid Radwaste System Tanks

Reactor Coolant Drain Tank

One reactor coolant drain tank is provided. The tank is sized to accommodate two vertical sump type pumps and to have a volume above the normal operating water level sufficient to accept the influent rate shown in Table 11.2-4.

The reactor coolant drain tank is a stainless steel, horizontal, cylindrical tank with dished heads. It is provided with a vacuum breaker to prevent excess external pressure during containment leak

testing. It is protected from excess internal pressure by a relief valve which vents to the containment sump.

Containment Sump

The containment sump is a stainless steel, rectangular sump tank designed for embedment in concrete. The containment sump is sized as shown in Table 11.2-4.

Degasifier Column

A one-stage, stainless steel degasifier column is provided. The degasifier column is designed to meet the performance parameters shown in Table 11.2-5.

Agitation and surface exposure are accomplished by spraying the influent onto the top of a column of packing which breaks up the flow and spreads it into thin films as it cascades downward. The low pressure causes the inlet water to boil. The flashed vapor accompanies the gas bearing water downward through the packing. Exposure to low pressure draws out the non-condensible gases consistent with Henry's Law and they pass out the vacuum connection. The vacuum connection is located near the last point of contact with the degassed water where the vacuum is greatest and conditions are least conducive to reabsorption. A stainless steel mesh demister is provided at the vessel vacuum connection to remove water droplets which are entrained in the gas/vapor mixture as it is exiting to the vapor condenser.

Degasifier Separator

One stainless steel separator is provided. It is designed to remove compressor water from the vacuum pump discharge flow for reuse. It also serves as a silencer.

Effluent Holdup Tanks

These stainless steel tanks contain effluent waste prior to processing. They are horizontal cylinders with internal pump suction piping at the low point of the tank, and with side manways for maintenance.

Waste Holdup Tanks

These stainless steel tanks contain floor and equipment drain waste before processing. They are vertical cylinders with internal pump suction piping at the low points of the tanks and with side manways for maintenance.

Monitor Tanks

These stainless steel tanks contain processed waste before discharge. They are vertical cylinders with internal pump suction piping at the low points of the tanks and with side manways for maintenance.

Chemical Waste Tank

This stainless steel tank contains chemical waste and hot sinks and shower drains before processing via mobile equipment. The configuration is a vertical cylinder with internal pump suction piping at the low point of the tank and with a side manway for maintenance.

11.2.2.3.4 Liquid Radwaste System Ion Exchangers

Four ion exchange vessels are provided, with resin volumes as shown in Table 11.2-2. The media will be selected by the plant operator to optimize system performance. The ion exchange vessels are stainless steel, vertical, cylindrical pressure vessels with inlet and outlet process nozzles plus connections for resin addition, sluicing, and draining. The process outlet and flush water outlet connections are equipped with resin retention screens designed to minimize pressure drop.

11.2.2.3.5 Liquid Radwaste System Filters

Waste Pre-Filter

This filter is provided to collect particulate matter in the process stream before ion exchange. The unit is constructed of stainless steel and has disposable filter bags.

Waste After-Filter

This filter is provided downstream of the ion exchangers to collect particulate matter, such as resin fines. The unit is constructed of stainless steel and has disposable filter cartridges.

11.2.2.4 Instrumentation Design

Instrumentation readout is available in the main control room and on portable display and control panels.

Alarms are provided to the data display system including a radwaste system annunciator in the main control room.

Pressure indicators provide pressure drops across demineralizers, filters, and strainers.

Releases to the environment are monitored for radioactivity. Section 11.5 describes this instrumentation.

Each tank is provided with level instrumentation that actuates an alarm on high liquid level in the tank, thus warning of potential tank overflow. High level in redundant tank pairs also diverts the flow to the standby tank. Table 11.2-3 provides a summary of the tank level alarms.

11.2.2.5 System Operation and Performance

11.2.2.5.1 Reactor Coolant System Effluent Processing

11.2.2.5.1.1 Reactor Coolant Systems Effluent: Letdown Line

Chemical and volume control system letdown is directed to the degasifier. This letdown flow automatically takes priority by causing isolation of influent to the degasifier from the reactor coolant drain tank pumps to prevent the design capacity of the degasifier from being exceeded.

When the degasifier and waste gas system are placed in operation one of the degasifier vacuum pumps operates to maintain a vacuum in the degasifier column. The degasifier separator pump operates to return compressor water to the vacuum pump. The degasifier separator vents to the gaseous radwaste system. Its level is automatically controlled by discharging excess water (due to condensation of vapor carryover from the degasifier column) to an effluent holdup tank. In the event of abnormally high level, chemical and volume control system letdown flow is automatically stopped.

Two effluent holdup tanks are provided. One is aligned to receive inputs. When it fills to the appropriate level, an alarm alerts the operator that the tank is full and ready for processing. The inlet diversion valve automatically realigns the system to route input to the other tank upon high-high alarm.

11.2.2.5.1.2 Reactor Coolant System Effluent: Reactor Coolant Drain Tank

The reactor coolant drain tank receives input from the reactor coolant system and other drains inside containment that have the potential to contain radioactive gas or hydrogen.

Initially and after servicing, the reactor coolant drain tank is filled with demineralized water and then purged with nitrogen to dilute and displace oxygen. The tank vent to the gaseous radwaste system normally remains closed. One of the reactor coolant drain tank pumps and the discharge valve are automatically controlled to maintain reactor coolant drain tank water level within a narrow band to minimize tank pressure variation. An alarm alerts the operator if the reactor coolant drain tank reaches a temperature consistent with the design leak of saturated RCS coolant. The system automatically realigns valves and recirculates the tank contents through the reactor coolant drain tank heat exchanger.

The cumulative quantity discharged from the reactor coolant drain tank is totalized and indicated for use in reactor coolant leakage evaluations.

The discharge may have a relatively high dissolved hydrogen concentration and is therefore aligned to the degasifier. However, during reactor coolant system loop drain operations the hydrogen and radioactive gas concentrations should be low and discharge may be directly aligned to an effluent holdup tank.

11.2.2.5.1.3 Processing of the Reactor Coolant System Effluents

Each effluent holdup tank vent includes a hydrogen detector to monitor the hydrogen concentration in the tank atmosphere. In the event of high alarm, the operator initiates air purge through the tank to dilute the hydrogen gas and maintain it below the flammable limits. The tanks vent to the radiologically controlled area ventilation system.

An effluent holdup tank high level alarm alerts the operator that the tank is full and ready for processing. The inlet diversion valve automatically directs the influent to the other tank upon high-high alarm.

To process the contents of the filled tank, the effluent holdup tank pump is started to recirculate and sample the tank contents. If additional gas stripping is required, the tank contents may be recirculated through the degasifier. The degasifier functions automatically as described in subsection 11.2.2.5.1.1.

The discharge of either effluent holdup tank pump can be aligned to the suction of the chemical and volume control system makeup pumps. This mode of operation is used during reactor coolant system degassing operations. Reactor coolant from the chemical and volume control system letdown is degassed in the degasifier, collected in one of the effluent holdup tanks, and continuously pumped back to the chemical and volume control system makeup pumps. The pump returns the degassed water to the reactor coolant system.

Reactor coolant collected in an effluent holdup tank during reactor coolant system loop drain operations may also be pumped to the chemical and volume control system makeup pumps for refill of the reactor coolant system. Before beginning this process, the operator fully drains the effluent holdup tank receiving the reactor coolant so that the boron concentration of the reactor coolant system is not significantly affected.

The effluent may be transferred to the mobile treatment facility for concentration or solidification. This disposal method is used only during unusual conditions that restrict the normal processed waste discharge mode described in the following paragraphs.

The normal mode of operation is to process the effluent by ion exchange and filtration to remove the radioactive materials. The ion exchangers operate in series as described in subsection 11.2.2.1.1.

The last bed provides a polishing function and also prevents radioactivity breakthrough to the monitor tank when the upstream unit becomes exhausted. This allows the full capacity of the upstream resin beds to be used, reducing the amount of spent resin that is generated.

When the analysis of samples taken periodically downstream of the ion exchange processing indicates an increase in radioactivity above prescribed limits, the operator isolates the expended unit(s) for resin replacement. Flow continues through the other units until a fresh resin bed is ready. When one of the last two ion exchangers has been replenished, the fresh unit is then brought online as the downstream unit.

The after-filter removes resin fines and other particulate matter that may pass through the ion exchangers. A high differential pressure alarm alerts the operator to the need for filter element replacement. Normally, filter element replacement is initiated on high radioactivity determined by periodic survey.

Process discharge is normally aligned to one of the monitor tanks. When one of the tanks is full, an alarm alerts the operator that the tank is full and ready to be discharged. The inlet diversion valve automatically realigns the system to route processed waste to another tank upon high-high level.

The operator then starts the monitor tank pump to recirculate the tank contents and samples the processed waste. Since the ion exchangers operate in the borated saturated mode, the water contains boric acid. The radioactivity and chemistry of the processed waste is determined by sample analysis. In the unlikely event that radioactivity exceeds discharge limitations, the tank contents are returned to a waste holdup tank for reprocessing.

Once it is confirmed that the waste water is within radioactivity discharge limitations, the operator prepares the system for discharge. The operator initiates discharge by starting the monitor tank pump and opening the remotely operated discharge valve. During controlled discharge, grab samples are taken for laboratory analysis and documentation of discharge.

If the radiation monitor in the discharge line detects high radiation, the valve automatically closes. The operator is alerted to this condition by a high radiation alarm, and is required to take corrective action. A manual drain valve is opened to flush the radiation monitor and confirm low radiation before re-establishing discharge to the circulating water blowdown. Low monitor tank level automatically stops the monitor tank pump.

11.2.2.5.2 Floor Drain and Equipment Drain Waste Processing

Miscellaneous liquid wastes normally include influent from the radioactive floor drains, equipment drains and auxiliary building sump and excess water from the solid radwaste system. These wastes collect in one of two waste holdup tanks.

A high level alarm in the tank alerts the operator that the tank is full and ready to be processed. The inlet diversion valve automatically directs influents to the second waste holdup tank upon high-high level. The waste holdup tank pump is started to recirculate and sample the tank contents. Additives may be introduced to the waste holdup tank to optimize filtration and ion exchange processes.

Floor drain wastes are also brought into the waste holdup tanks from the containment sump. High sump level automatically opens the containment isolation valves and starts a pump to transfer the sump contents. Low level automatically stops the pump and closes the isolation valves. An alarm is provided to alert the operator to abnormally high containment sump level and the standby pump is automatically started. Cumulative flow is totalized and indicated to support reactor coolant leakage analysis.

The normal mode of operation is to process the waste water through the pre-filter, ion exchangers, and after-filter to the monitoring tank as described for the reactor coolant system effluent

processing. Under abnormal conditions, the waste may also be transferred directly to a mobile treatment facility.

11.2.2.5.3 Detergent Waste Processing

The detergent wastes from the plant hot sinks and showers are routed to the chemical waste tank. Normally, these wastes are sampled and confirmed suitable for discharge without processing. If processing prior to discharge is necessary, three courses of action are available. The waste water may be transferred to a waste holdup tank and processed in the same manner as other radioactively contaminated waste water. If the onsite processing capabilities are not suitable for the composition of the detergent waste, processing can be performed using mobile equipment brought into one of the truck bays of the radwaste building or the waste water can be shipped offsite for processing. After processing by mobile equipment the water may be transferred to a waste holdup tank for further processing by the onsite equipment or transferred to a monitor tank for sampling and discharge.

11.2.2.5.4 Chemical Waste Processing

Radioactively contaminated chemical wastes are collected in the chemical waste tank. Chemicals may be added to the tank for pH or other adjustment. The volume of these wastes is expected to be low. The design includes alternatives for processing or discharge of chemical wastes. They may be processed onsite without being combined with other wastes using mobile equipment. When combined with detergent wastes, they may be suitable for discharge without treatment or for processing by onsite equipment before discharge. When not suitable for onsite processing, they can be treated using mobile equipment or shipped offsite for processing. After processing by mobile equipment the water may be transferred to a waste holdup tank for further processing by the onsite equipment or transferred to a monitor tank for sampling and discharge.

11.2.2.5.5 Steam Generator Blowdown Processing

Normal steam generator blowdown processing is accommodated by the steam generator blowdown system, which is described in subsection 10.4.8.

If steam generator tube leakage results in levels of radioactivity in the blowdown stream above what can be accommodated by the secondary-side systems, this stream is directed to the liquid radwaste system. For this function, the operator aligns the steam generator blowdown system to the inlet of the waste holdup tank. The blowdown waste is then processed in the same way as other wastes.

11.2.2.5.6 Ion Exchange Media Replacement

The initial and subsequent fill of ion exchange media is made through a resin fill nozzle on the top of the ion exchange vessel. When the media are spent and ready to be transferred to the solid radwaste system, the vessel is isolated from the process flow. The flush water line is opened to the sluice piping and demineralized water is pumped into the vessel through the normal process outlet connection upward through the media retention screen. The media fluidize in the upward, reverse flow. When the bed has been fluidized, the sluice connection is opened and the bed is sluiced to

the spent resin tanks in the solid radwaste system (WSS). Demineralized water flow continues until the bed has been removed and the sluice lines are flushed clean of spent resin.

11.2.3 Radioactive Releases

Liquid waste is produced both on the primary side (primarily from adjustment of reactor coolant boron concentration and from reactor coolant leakage) and the secondary side (primarily from steam generator blowdown processing and from secondary side leakage). Primary and secondary coolant activity levels are provided in Section 11.1 for both the design case and the anticipated case, which is based on operating plant experience.

Except for reactor coolant system degasification in anticipation of shutdown, the AP1000 does not recycle primary side effluents for reuse. Primary effluents are discharged to the environment after processing. Fluid recycling is provided for the steam generator blowdown fluid which is normally returned to the condensate system.

11.2.3.1 Discharge Requirements

The release of radioactive liquid effluents from the plant may not exceed the concentration limits specified in Reference 1 nor may the releases result in the annual offsite dose limits specified in 10 CFR 50, Appendix I (Reference 2) being exceeded.

11.2.3.2 Estimated Annual Releases

The annual average release of radionuclides from the plant is determined using the PWR-GALE code (Reference 3). The PWR-GALE code models releases which use source terms derived from data obtained from the experience of operating PWRs. The code input parameters used in the analysis to model the AP1000 plant are listed in Table 11.2-6. The annual releases for a single-unit site are presented in Table 11.2-7.

In agreement with Reference 3, the total releases include an adjustment factor of 0.16 curies per year to account for anticipated operational occurrences. The adjustment uses the same distribution of nuclides as the calculated releases.

11.2.3.3 Dilution Factor

The dilution factor provided for the activity released is site dependent; the value of 6000 gpm used herein is based on cooling tower blowdown requirements and is expected to be conservatively low. The plant operator will select dilution flow rates to ensure that the effluent concentration limits of 10 CFR Part 20, the annual offsite dose limits in 10 CFR 50 Appendix I, and any local requirements are continuously met. If the available dilution is low, the discharge rate can be reduced to maintain acceptable concentrations.

The required dilution flow is dependent on the liquid waste discharge rate and, while the monitor tank pumps have a design flow rate of 100 gpm, the discharge flow is controlled to be compatible with the available dilution flow. With a typical liquid waste release of 1925 gallons per day, the nominal circulating water blowdown flow of 6000 gpm provides sufficient dilution flow to maintain the annual average discharge concentrations well below the effluent concentration limits.

Actual plant operation is dependent on the waste liquid activity level and the available dilution flow.

11.2.3.4 Release Concentrations

The annual release data provided in Table 11.2-7 represent expected releases from the plant. To demonstrate compliance with the Reference 1 effluent concentration limits, the discharge concentrations have been evaluated for the release of a typical daily liquid waste volume of 1925 gallons per day and using the nominal circulating water blowdown flow of 6000 gpm. Table 11.2-8 lists the annual average nuclide release concentrations and the fraction of the effluent concentration limits using base GALE code assumptions. As shown in Table 11.2-8, the overall fraction of the effluent concentration limit is 0.11, which is well below the allowable value of 1.0.

The annual releases from the plant have also been evaluated based on operation with the maximum defined fuel defect level. The maximum defined fuel defect level corresponds to the Technical Specification limit on coolant activity which is based on 0.25 percent fuel defects. Table 11.2-9 lists the annual average nuclide release concentrations and the fractions of the effluent concentration limits for the maximum defined fuel defects. As shown in Table 11.2-9, the overall fraction of the effluent concentration limit for the maximum defined fuel defect level is 0.53, which is well below the allowable value of 1.0.

11.2.3.5 Estimated Doses

Estimated doses are site specific and are discussed in subsection 11.2.5.

11.2.3.6 Quality Assurance

The quality assurance program for design, fabrication, procurement, and installation of the liquid radwaste system is in accordance with the overall quality assurance program described in Chapter 17.

11.2.4 Preoperational Testing

11.2.4.1 Sump Level Instrument Testing

One of the diverse methods of detecting small reactor coolant pressure boundary leaks is monitoring the containment sump level. (See subsection 5.2.5 for a full discussion.) A sump capacity calibration test is performed so the containment sump level instruments can provide a display that is correlated to the contained volume of water in the sump.

In addition to a normal level accuracy calibration of the containment sump level instruments, WLS-LT-034 and WLS-LT-035, their displays will be correlated to the volume of water during preoperational testing. A known volume of water will be added to the containment sump. The change in sump level will be measured by marking the sump wall before and after the addition of water. The change in the display of the sump level instruments will be compared to the level change measured on the sump wall. A sump level change corresponding to a volume of water which is smaller than that released in an hour by 0.5 gpm reactor coolant system leak can be detected.

11.2.4.2 Discharge Control/Isolation Valve Testing

The AP1000 effluent discharge line includes a radiation monitor, WLS-RE-229, as described in subsection 11.5.2.3.3. A concentration of radioactivity in the effluent, which exceeds the radiation monitor setpoint, causes a high radiation signal to automatically close the discharge control/isolation valve.

A test will be performed on the liquid radwaste system discharge control/isolation valve, WLS-PL-V233, during preoperational testing. A simulated WLS-RE-229 high radiation signal will be sent to the plant control system and the discharge control/isolation valve will be observed to close.

11.2.4.3 Preoperational Inspection

The performance of the liquid radwaste system has been evaluated based upon using a predetermined quantity and type of ion-exchange media. An inspection will confirm that the proper volume of media, as listed in Table 11.2-2, "Component Data – Liquid Radwaste System," has been installed into the appropriate liquid radwaste system components, MV03 and MV04A/B/C.

11.2.5 Combined License Information

11.2.5.1 Liquid Radwaste Processing by Mobile Equipment

The Combined License applicant will discuss how any mobile or temporary equipment used for storing or processing liquid radwaste conforms to Regulatory Guide 1.143. For example, this includes discussion of equipment containing radioactive liquid radwaste in the nonseismic Radwaste Building.

11.2.5.2 Cost Benefit Analysis of Population Doses

The analysis performed to determine offsite dose due to liquid effluents is based upon the AP1000 generic site parameters included in Chapter 1 and Tables 11.2-5 and 11.2-6. The Combined License applicant will provide a site specific cost-benefit analysis to address the requirements of 10 CFR 50, Appendix I, regarding population doses due to liquid effluents.

The Combined License applicant will also comply with individual dose limits to members of the public in 10 CFR 50 Appendix I and 10 CFR 20.1301.

11.2.5.3 Identification of Ion Exchange and Adsorbent Media

The Combined License information requested in this subsection has been fully addressed in APP-GW-GLR-008 (Reference 6), and the applicable changes are incorporated into the DCD. No additional work is required by the Combined License applicant to address the Combined License information requested in this subsection.

The following words represent the original Combined License Information Item commitment, which has been addressed as discussed above:

> The Combined License applicant will identify the types of liquid waste ion exchange and absorbent media to be used in the liquid radwaste system (WLS). This determination will be based on developments in ion exchange technology and specific characteristics of the liquid radwaste to be processed.

11.2.5.4 Dilution and Control of Boric Acid Discharge

The Combined License information requested in this subsection has been fully addressed in APP-GW-GLR-014 (Reference 7), and the applicable changes are incorporated into the DCD. No additional work is required by the Combined License applicant to address the Combined License information requested in this subsection.

The following words represent the original Combined License Information Item commitment, which has been addressed as discussed above:

> The Combined License applicant will determine the rate of discharge and the required dilution to maintain acceptable concentrations. Refer to Section 11.5 for a discussion of the program to control releases.
>
> The Combined License applicant will discuss the planned discharge flow rate for borated wastes and controls for limiting the boric acid concentration in the circulating water system blowdown.

11.2.6 References

1. "Annual Limits on Intake (ALIs) and Derived Air Concentrations (DACs) of Radionuclides for Occupational Exposure; Effluent Concentrations; Concentrations for Release to Sewerage," 10 CFR Part 20, Appendix B, Issued by 58 FR 67657, April 28, 1995.

2. "Numerical Guides for Design Objectives and Limiting Conditions for Operation to Meet the Criterion 'As Low As Is Reasonably Achievable' for Radioactive Material in Light-Water-Cooled Nuclear Power Reactor Effluents," 10 CFR Part 50, Appendix I.

3. "Calculation of Releases of Radioactive Materials in Gaseous and Liquid Effluents from Pressurized Water Reactors (PWR-GALE Code)," NUREG-0017, Revision 1, March 1985.

4. ANSI/ANS-55.6-1993, "Liquid Radioactive Waste Processing Systems for Light Water Reactor Plants."

5. "Minimization of Contamination," 10 CFR 20.1406.

6. APP-GW-GLR-008, "Identification of Ion Exchange and Absorbent Media, Completing COL Items 11.2-3 and 11.3-2," Westinghouse Electric Company LLC.

7. APP-GW-GLR-014, "Closure of COL Items in DCD Chapter 11, Dilution and Control of Boric Acid Discharge," Westinghouse Electric Company LLC.

8. "Appendix A to Part 71 – Determination of A_1 and A_2," 10 CFR 71 Appendix A, Table A-1.

Table 11.2-1 (Sheet 1 of 2)

LIQUID INPUTS AND DISPOSITION

Collection Tank and Sources	Expected Input Rate	Activity	Basis	Disposition
1. Effluent holdup tanks				Filtered, demineralized, and discharged
Chemical and volume control system letdown	159,000 gpy	100% of reactor coolant	AP1000-specific calculations[b]	
Leakage inside containment (to reactor coolant drain tank)	10 gpd	167% of reactor coolant	ANSI/ANS-55.6	
Leakage outside containment (to effluent holdup tanks)	80 gpd	100% of reactor coolant	ANSI/ANS-55.6	
Sampling drains	200 gpd	100% of reactor coolant	ANSI/ ANS-55.6[a]	
2. Waste holdup tank				Filtered, demineralized and discharged
Reactor containment cooling	500 gpd	0.1% of reactor coolant	ANSI/ANS-55.6	
Spent fuel pool liner leakage	25 gpd	0.1% of reactor coolant	ANSI/ANS-55.6	
Misc. drains	675 gpd	0.1% of reactor coolant	ANSI/ANS-55.6	

Table 11.2-1 (Sheet 2 of 2)

LIQUID INPUTS AND DISPOSITION

Collection Tank and Sources	Expected Input Rate	Activity	Basis	Disposition
3. Detergent waste				Filtered, monitored, and discharged. If necessary, processed with mobile equipment.
Hot shower	0 gpd	10^{-7} µCi/g	ANSI/ANS-55.6	
Hand wash	200 gpd	10^{-7} µCi/g	ANSI/ANS-55.6	
Equipment and area decontamination	40 gpd	0.1% of reactor coolant	ANSI/ANS-55.6	
Laundry			Offsite laundry	
4. Chemical wastes	2 gpd	≤ reactor coolant	Estimate	Processed with mobile equipment

Notes:

a. ANSI/ANS-55.6 identifies sampling drains activity of 5 percent of reactor coolant; 100 percent is used as a conservative input for GALE Code analysis.

b. Average letdown for all normal reactor fuel cycle operations; initial heatup, dilutions and borations.

Table 11.2-2 (Sheet 1 of 7)

COMPONENT DATA – LIQUID RADWASTE SYSTEM

Pumps	
Containment sump pumps	
Number	2
Type	Submersible centrifugal
Design pressure (psig)	15 external
Design temperature (°F)	250
Design flow (gpm)	100
Material	Stainless steel
Reactor coolant drain tank pumps	
Number	2
Type	Vertical sump type, centrifugal
Design pressure (psig)	15 external
Design temperature (°F)	250
Design flow (gpm)	100
Material	Stainless steel
Degasifier separator pump (part of vacuum degasifier)	
Number	2
Type	Centrifugal
Design pressure (psig)	125
Design temperature (°F)	200
Design flow (gpm)	7
Material	Stainless steel

Table 11.2-2 (Sheet 2 of 7)

COMPONENT DATA – LIQUID RADWASTE SYSTEM

Pumps	
Standard waste processing pump	
Standard waste processing pump used for:[1]	
Number / Application	
2 Degasifier discharge pumps	
2 Effluent holdup tank pumps	
2 Waste holdup tank pumps	
6 Monitor tank pumps	
1 Chemical waste tank pump	
Type	Air-operated, double-diaphragm
Design pressure (psig)	125
Design temperature (°F)	200
Design flow (gpm)	100 (can be varied by varying air supply flow)
Material	Stainless steel body, Elastomeric diaphragm
Degasifer vacuum pumps (part of vacuum degasifier package)	
Number	2
Type	Liquid ring
Design pressure (psig)	125
Design temperature (°F)	200
Design flow (scfm)	0.5 steady, 150 hogging
Material	Stainless steel

Table 11.2-2 (Sheet 3 of 7)

COMPONENT DATA – LIQUID RADWASTE SYSTEM

Filters	
Waste pre-filter	
Number	1
Type	Disposable bag
Design pressure (psig)	150
Design temperature (°F)	150
Design flow (gpm)	75
Particle size (micron, 98% retention)	25
Materials	
Housing	Stainless steel
Filter	Polypropylene/pleated paper
Waste after-filter	
Number	1
Type	Disposable bag or cartridge
Design pressure (psig)	150
Design temperature (°F)	150
Design flow (gpm)	75
Particle size (micron, 98% retention)	0.5
Materials	
Housing	Stainless steel
Filter medium	Polypropylene/pleated paper

Table 11.2-2 (Sheet 4 of 7)

COMPONENT DATA – LIQUID RADWASTE SYSTEM

Heat Exchangers	
Reactor Coolant drain tank heat exchanger	
Number	1
Type	Horizontal U-tube
Design pressure (psig)	150 tubeside, 200 shellside
Design temperature (°F)	250 tubeside, 200 shellside
Design flow (lb/hr)	48,700 tubeside, 62,200 shellside
Heat Transfer Design Case	
Temperature inlet (°F)	175 tubeside, 95 shellside
Temperature outlet (°F)	143 tubeside, 120 shellside
Material	SS tubeside, CS shellside
Vapor condenser	
Number	1
Type	Horizontal U-tube
Design pressure (psig)	150
Design temperature (°F)	150
Design flow (lb/hr)	100,000 tubeside, 1700 shellside
Heat Transfer Design Case	
Temperature inlet (°F)	45 tubeside, 84 shellside
Temperature outlet (°F)	63 tubeside, 60 shellside
Material	SS

Table 11.2-2 (Sheet 5 of 7)

COMPONENT DATA – LIQUID RADWASTE SYSTEM

Ion Exchangers	
Deep bed filter	
Number	1
Design pressure (psig)	150
Design temperature (°F)	150
Design flow (gpm)	75
Nominal resin volume (ft^3)	50
Material	Stainless steel
Resin type	Layered: Activated charcoal on zeolite resin (Adjustable for plant conditions)
Process decontamination factors	See Table 11.2-5
Waste ion exchangers	
Number	3
Design pressure (psig)	150
Design temperature (°F)	150
Design flow (gpm)	75
Nominal resin volume (ft^3)	30
Materials	Stainless steel
Resin type	One cation, Two mixed (Adjustable for plant conditions)
Process decontamination factors	See Table 11.2-5

Table 11.2-2 (Sheet 6 of 7)

COMPONENT DATA – LIQUID RADWASTE SYSTEM

Tanks	
Reactor coolant drain tank	
Number	1
Nominal volume (gal)	900
Type	Horizontal
Design pressure (psig)	10 internal, 15 external
Material	Stainless steel
Containment sump	
Number	1
Nominal volume (gal)	220
Type	Rectangular
Design pressure (psig)	Atmospheric
Design temperature (°F)	200
Material	Stainless steel
Effluent holdup tanks	
Number	2
Nominal volume (gal)	28,000
Type	Horizontal
Design pressure (psig)	Atmospheric
Design temperature (°F)	150
Material	Stainless steel
Waste holdup tanks	
Number	2
Nominal volume (gal)	15,000
Type	Vertical
Design pressure (psig)	Atmospheric
Design temperature (°F)	150
Material	Stainless steel

Table 11.2-2 (Sheet 7 of 7)

COMPONENT DATA – LIQUID RADWASTE SYSTEM

Monitor tanks	
Number	6
Nominal volume (gal)	15,000
Type	Vertical
Design pressure (psig)	Atmospheric
Design temperature (°F)	150
Material	Stainless steel
Chemical waste tank	
Number	1
Nominal volume (gal)	8,900
Type	Vertical
Design pressure (psig)	Atmospheric
Design temperature (°F)	150
Material	Stainless steel
Degasifier separator (part of vacuum degasifier package)	
Number	1
Nominal volume (gal)	45
Type	Vertical
Design pressure (psig)	75
Design temperature (°F)	200
Material	Stainless steel
Degasifier column (part of vacuum degasifier package)	
Number	1
Nominal volume (gal)	900
Type	Vertical
Design pressure (psig)	75 internal 15 external
Design temperature (°F)	150
Material	Stainless steel

Note:

1. This same pump is also used for other applications, such as sumps outside containment.

Table 11.2-3

SUMMARY OF TANK LEVEL INDICATION, LEVEL ANNUNCIATORS, AND OVERFLOWS

Tank	Level Indication Location (Note 3)	Alarm Location	Alarm	Overflow To
Effluent holdup	MCR	MCR	High	Room drains to auxiliary building sump which is pumped to waste holdup tank (Note 2)
Waste holdup	MCR	MCR	High	Room (Note 4)
Chemical waste	MCR	MCR	High	Room (Note 2)
Monitor	MCR	MCR	High	Room (Note 5)

Notes:

1. MCR = main control room
2. Room is piped to a floor drain within the auxiliary building, which is seismic Category I and water-tight with curbs or walls of sufficient height to contain the entire contents of the contained tank.
3. Monitoring of the liquid radwaste system is performed through the data display and processing system. Control functions are performed by the plant control system. Appropriate alarms and displays are available in the control room. Local indication and control are available on portable displays which may be connected to the data display and processing system. See Chapter 7.
4. Room is within the auxiliary building, which is seismic Category I and water-tight with curbs or walls of sufficient height to contain the entire contents of the contained tank.
5 Room is piped to a floor drain within the auxiliary building, which is seismic Category I and water-tight with curbs or walls of sufficient height to contain the entire contents of the contained tank, or to a floor drain within the radwaste building, which is water tight with curbs or walls of sufficient height to contain the entire contents of the contained tank.

Table 11.2-4

TANK SURGE CAPACITY

Reactor Coolant Drain Tank • Sized to accept 10 gpm of saturated reactor coolant for 1 hour without discharge or overflow. • Reactor coolant drain tank heat exchanger designed to limit the temperature to less than 175°F with this input assumed to be at 580°F.
Containment Sump • Sized to allow collection of 160 gallons of water between pumping cycles.
Effluent Holdup Tanks • Sized to allow (together) a back-to-back plant shutdown and restart without delay at any time during the first 85 percent of core life. This operation requires nominal processing of the effluent monitor tanks and normal discharge with temporary storage of waste fluid in the cask loading pit. • Sized to allow (together) a single plant shutdown and restart without delay at any time during the first 80 percent of core life. This operation requires nominal processing to the monitor tanks, but no discharge from the plant.
Other Tanks • Sized based on accommodating maximum input without operator intervention for reasonable lengths of time.

Table 11.2-5

DECONTAMINATION FACTORS

Decontamination factors assumed per NUREG-0017, Revision 1 (PWR-GALE code input) to be as follows:

Resin Type/Component	Iodine	Cs/Rb	Other
Zeolite/deep bed filter (Note 1)	1	100	1
Cation/waste ion exchanger 1	1	10	10
Mixed/waste ion exchanger 2	100	2 (Note 2)	100
Mixed/waste ion exchanger 3	10	10 (Note 2)	10 (Note 2)

Other components not directly involved in discharge from the plant:

Degasifier Column

Reduce hydrogen by a factor of 40

Assuming inlet flow of 100 gpm at 130°F.

Notes:

1. This component is not included in NUREG-0017. DFs based upon "Reduction of Cesium and Cobalt Activity in Liquid Radwaste Processing Using Clinoptilolite Zeolite at Duke Power Company," by O.E. Ekechokwu, et al., Proc. Waste Management '92, Tucson, Arizona, March 1992, University of Arizona, Tucson.
2. Credit for this decontamination factor not taken in determination of anticipated annual releases.

Table 11.2-6 (Sheet 1 of 3)

INPUT PARAMETERS FOR THE GALE COMPUTER CODE

Thermal power level (MWt)	3400
Mass of primary coolant (lb)	4.35×10^5
Primary system letdown rate (gpm)	100
Letdown cation demineralizer flow rate, annual average (gpm)	10
Number of steam generators	2
Total steam flow (lb/hr)	14.97×10^6
Mass of liquid in each steam generator (lb)	1.75×10^5
Total blowdown rate (lb/hr)	4.2×10^4
Blowdown treatment method	0(1)
Condensate demineralizer regeneration time	N/A
Condensate demineralizer flow fraction	0.33
Primary coolant bleed for boron control	
Bleed flow rate (gpd)	435
Decontamination factor for I	10^3
Decontamination factor for Cs and Rb	10^3
Decontamination factor for others	10^3
Collection time (day)	30
Process and discharge time (day)	0
Fraction discharged	1.0
Equipment Drains and Clean Waste	
Equipment drains flow rate (gpd)	290
Fraction of reactor coolant activity	1.023
Decontamination factor for I	10^3
Decontamination factor for Cs and Rb	10^3
Decontamination factor for others	10^3
Collection time (day)	30
Process and discharge time (day)	0
Fraction discharged	1.0

Table 11.2-6 (Sheet 2 of 3)

INPUT PARAMETERS FOR THE GALE COMPUTER CODE

Dirty Waste	
Dirty waste input flow rate (gpd)	1200
Fraction of reactor coolant activity	0.001
Decontamination factor for I	10^3
Decontamination factor for Cs and Rb	10^3
Decontamination factor for others	10^3
Collection time (day)	10
Process and discharge time (day)	0
Fraction discharged	1.0
Blowdown Waste	
Blowdown fraction processed	1
Decontamination factor for I	100
Decontamination factor for Cs and Rb	10
Decontamination factor for others	100
Collection time	N/A
Process and discharge time	N/A
Fraction discharged	0
Regenerant Waste	N/A

Table 11.2-6 (Sheet 3 of 3)

INPUT PARAMETERS FOR THE GALE COMPUTER CODE

Gaseous Waste System	
Continuous gas stripping of full letdown purification flow	None
Holdup time for xenon, (days)	38
Holdup time for krypton, (days)	2
Fill time of decay tanks for gas stripper	N/A
Gas waste system: HEPA filter	None
Auxiliary building: Charcoal filter	None
Auxiliary building: HEPA filter	None
Containment volume (ft^3)	2.1×10^6
Containment atmosphere internal cleanup rate (ft^3/min)	N/A
Containment high volume purge:	
Number of purges per year (in addition to two shutdown purges)	0
Charcoal filter efficiency (%)	90
HEPA filter efficiency (%)	99
Containment normal continuous purge rate (ft^3/min) (based on 20 hrs/week at 4000 ft^3/min)	500
Charcoal filter efficiency (%)	90
HEPA filter efficiency (%)	99
Fraction of iodine released from blowdown tank vent	N/A
Fraction of iodine removed from main condenser air ejector release	0.0
Detergent Waste Decontamination Factor	0.0(2)

Notes:

1. A "0" is input to indicate that the blowdown is recycled to the condensate system after treatment in the blowdown system.
2. A "0.0" is input to indicate that the plant does not have an onsite laundry.

Table 11.2-7 (Sheet 1 of 2)

RELEASES TO DISCHARGE CANAL (Ci/Yr) CALCULATED BY GALE CODE

Nuclide	Shim Bleed	Misc. Wastes	Turbine Building	Combined Releases	Total Releases[1]
Corrosion and Activation Products					
Na-24	0.00053	0.0[2]	0.00008	0.00061	0.00163
Cr-51	0.00068	0.0	0.0	0.00070	0.00185
Mn-54	0.00048	0.0	0.0	0.00049	0.00130
Fe-55	0.00037	0.0	0.0	0.00037	0.00100
Fe-59	0.00008	0.0	0.0	0.00008	0.00020
Co-58	0.00125	0.0	0.00001	0.00126	0.00336
Co-60	0.00016	0.0	0.0	0.00017	0.00044
Zn-65	0.00015	0.0	0.0	0.00015	0.00041
W-187	0.00004	0.0	0.0	0.00005	0.00013
Np-239	0.00008	0.0	0.0	0.00009	0.00024
Fission Products					
Br-84	0.00001	0.0	0.0	0.00001	0.00002
Rb-88	0.00010	0.0	0.0	0.00010	0.00027
Sr-89	0.00004	0.0	0.0	0.00004	0.00010
Sr-90	0.0	0.0	0.0	0.0	0.00001
Sr-91	0.00001	0.0	0.0	0.00001	0.00002
Y-91m	0.0	0.0	0.0	0.00001	0.00001
Y-93	0.00003	0.0	0.0	0.00004	0.00009
Zr-95	0.00010	0.0	0.0	0.00011	0.00023
Nb-95	0.00009	0.0	0.0	0.00009	0.00021
Mo-99	0.00028	0.0	0.00001	0.0003	0.00057
Tc-99m	0.00027	0.0	0.00001	0.00028	0.00055
Ru-103	0.00183	0.00001	0.00002	0.00185	0.00493
Rh-103m	0.00183	0.00001	0.00002	0.00185	0.00493
Ru-106	0.02729	0.00011	0.00021	0.02761	0.07352
Rh-106	0.02729	0.00011	0.00021	0.02761	0.07352
Ag-110m	0.00039	0.0	0.0	0.00039	0.00105
Ag-110	0.00005	0.0	0.0	0.00005	0.00014
Te-129m	0.00004	0.0	0.0	0.00005	0.00012
Te-129	0.00006	0.0	0.0	0.00006	0.00015

Table 11.2-7 (Sheet 2 of 2)

RELEASES TO DISCHARGE CANAL (Ci/Yr) CALCULATED BY GALE CODE

Nuclide	Shim Bleed	Misc. Wastes	Turbine Building	Combined Releases	Total Releases(1)
Te-131m	0.00003	0.0	0.0	0.00003	0.00009
Te-131	0.00001	0.0	0.0	0.00001	0.00003
I-131	0.00512	0.00004	0.00015	0.00531	0.01413
Te-132	0.00009	0.0	0.0	0.00009	0.00024
I-132	0.00054	0.00001	0.00007	0.00062	0.00164
I-133	0.00211	0.00003	0.00038	0.00252	0.00670
I-134	0.00030	0.0	0.0	0.00031	0.00081
Cs-134	0.00370	0.00001	0.00002	0.00373	0.00993
I-135	0.00144	0.00002	0.00041	0.00187	0.00497
Cs-136	0.00023	0.0	0.0	0.00024	0.00063
Cs-137	0.00496	0.00001	0.00003	0.00500	0.01332
Ba-137m	0.00464	0.00001	0.00002	0.00468	0.01245
Ba-140	0.00203	0.00001	0.00003	0.00207	0.00552
La-140	0.00272	0.00002	0.00005	0.00279	0.00743
Ce-141	0.00003	0.0	0.0	0.00004	0.00009
Ce-143	0.00006	0.0	0.00001	0.00007	0.00019
Pr-143	0.00005	0.0	0.0	0.00005	0.00013
Ce-144	0.00117	0.0	0.00001	0.00119	0.00316
Pr-144	0.00117	0.0	0.00001	0.00119	0.00316
All others	0.00001	0.0	0.0	0.00001	0.00002
Total (except tritium)	0.09398	0.00043	0.00182	0.09623	0.25623
					Tritium release = 1010 curies per year

Notes:

1. The release totals include an adjustment of 0.16 Ci/yr added by PWR-GALE code to account for anticipated operational occurrences such as operator errors that result in unplanned releases.
2. An entry of 0.0 indicates that the value is less than 10^{-5} Ci/yr.

Table 11.2-8 (Sheet 1 of 2)

COMPARISON OF ANNUAL AVERAGE LIQUID RELEASE CONCENTRATIONS WITH 10 CFR 20 FOR EXPECTED RELEASES EFFLUENT CONCENTRATION LIMITS

Nuclide	Discharge Concentration (μCi/ml)(1)	Effluent Concentration Limit (μCi/ml)(2)	Fraction of Concentration Limit
Na-24	1.7E-10	5.0E-05	3.4E-06
Cr-51	1.9E-10	5.0E-04	3.9E-07
Mn-54	1.4E-10	3.0E-05	4.5E-06
Fe-55	1.0E-10	1.0E-04	1.0E-06
Fe-59	2.1E-11	1.0E-05	2.1E-06
Co-58	3.5E-10	2.0E-05	1.8E-05
Co-60	4.6E-11	3.0E-06	1.5E-05
Zn-65	4.3E-11	5.0E-06	8.6E-06
W-187	1.4E-11	3.0E-05	4.5E-07
Np-239	2.5E-11	2.0E-05	1.3E-06
Br-84	2.1E-12	4.0E-04	5.2E-09
Rb-88	2.8E-11	4.0E-04	7.1E-08
Sr-89	1.0E-11	8.0E-06	1.3E-06
Sr-91	2.1E-12	2.0E-05	1.0E-07
Y-91m	1.0E-12	2.0E-03	5.2E-10
Y-93	1.2E-11	2.0E-05	5.8E-07
Zr-95	2.9E-11	2.0E-05	1.5E-06
Nb-95	2.6E-11	3.0E-05	8.7E-07
Mo-99	8.4E-11	2.0E-05	4.2E-06
Tc-99m	8.0E-11	1.0E-03	8.0E-08
Ru-103	5.2E-10	3.0E-05	1.7E-05
Rh-103m	5.2E-10	6.0E-03	8.6E-08
Ru-106	7.7E-09	3.0E-06	2.6E-03

Table 11.2-8 (Sheet 2 of 2)

COMPARISON OF ANNUAL AVERAGE LIQUID RELEASE CONCENTRATIONS WITH 10 CFR 20 FOR EXPECTED RELEASES EFFLUENT CONCENTRATION LIMITS

Nuclide	Discharge Concentration (μCi/ml)(1)	Effluent Concentration Limit (μCi/ml)(2)	Fraction of Concentration Limit
Ag-110m	1.1E-10	6.0E-06	1.8E-05
Te-129m	1.3E-11	7.0E-06	1.8E-06
Te-129	1.6E-11	4.0E-04	3.9E-08
Te-131m	9.4E-12	8.0E-06	1.2E-06
Te-131	3.1E-12	8.0E-05	3.9E-08
I-131	1.5E-09	1.0E-06	1.5E-03
Te-132	2.5E-11	9.0E-06	2.8E-06
I-132	1.7E-10	1.0E-04	1.7E-06
I-133	7.0E-10	7.0E-06	1.0E-04
I-134	8.5E-11	4.0E-04	2.1E-07
Cs-134	1.0E-09	9.0E-07	1.2E-03
I-135	5.2E-10	3.0E-05	1.7E-05
Cs-136	6.6E-11	6.0E-06	1.1E-05
Cs-137	1.4E-09	1.0E-06	1.4E-03
Ba-140	5.8E-10	8.0E-06	7.2E-05
La-140	7.8E-10	9.0E-06	8.6E-05
Ce-141	9.4E-12	3.0E-05	3.1E-07
Ce-143	2.0E-11	2.0E-05	9.9E-07
PR-143	1.4E-11	2.5E-05	5.4E-07
Ce-144	3.3E-10	3.0E-06	1.1E-04
Pr-144	3.3E-10	6.0E-04	5.5E-07
H-3	1.1E-04	1.0E-03	1.1E-01
			Total = 0.11

Notes:

1. Annual average discharge concentration based on release of average daily discharge for 292 days per year with 6000 gpm dilution flow.
2. Effluent concentration limits are from Reference 1.

Table 11.2-9 (Sheet 1 of 2)

COMPARISON OF ANNUAL AVERAGE LIQUID RELEASE CONCENTRATIONS WITH 10 CFR 20 EFFLUENT CONCENTRATION LIMITS FOR RELEASES WITH MAXIMUM DEFINED FUEL DEFECTS

Nuclide	Discharge Concentration (μCi/ml)(1)	Effluent Concentration Limit (μCi/ml)(2)	Fraction of Concentration Limit
Na-24	1.7E-10	5.0E-05	3.4E-06
Cr-51	1.6E-10	5.0E-04	3.2E-07
Mn-54	1.4E-10	3.0E-05	4.5E-06
Fe-55	1.0E-10	1.0E-04	1.0E-06
Fe-59	2.1E-11	1.0E-05	2.1E-06
Co-58	3.5E-10	2.0E-05	1.8E-05
Co-60	4.6E-11	3.0E-06	1.5E-05
Zn-65	4.3E-11	5.0E-06	8.6E-06
W-187	1.4E-11	3.0E-05	4.5E-07
Np-239	2.5E-11	2.0E-05	1.3E-06
Br-84	4.6E-12	4.0E-04	1.1E-08
Rb-88	2.9E-10	4.0E-04	7.1E-07
Sr-89	1.8E-10	8.0E-06	2.3E-05
Sr-91	9.1E-12	2.0E-05	4.5E-07
Y-91m	7.0E-12	2.0E-03	3.5E-09
Y-93	1.2E-11	2.0E-05	5.8E-07
Zr-95	4.3E-11	2.0E-05	2.2E-06
Nb-95	4.6E-11	3.0E-05	1.5E-06
Mo-99	5.4E-09	2.0E-05	2.7E-04
Tc-99m	4.9E-09	1.0E-03	4.9E-06
Ru-103	3.4E-10	3.0E-05	1.1E-05
Rh-103m	3.4E-10	6.0E-03	5.7E-08
Ru-106	1.6E-08	3.0E-06	5.5E-03

Table 11.2-9 (Sheet 2 of 2)

COMPARISON OF ANNUAL AVERAGE LIQUID RELEASE CONCENTRATIONS WITH 10 CFR 20 EFFLUENT CONCENTRATION LIMITS FOR RELEASES WITH MAXIMUM DEFINED FUEL DEFECTS

Nuclide	Discharge Concentration (μCi/ml)(1)	Effluent Concentration Limit (μCi/ml)(2)	Fraction of Concentration Limit
Ag-110m	1.4E-10	6.0E-06	2.3E-05
Te-129m	3.9E-10	7.0E-06	5.6E-05
Te-129	1.6E-11	4.0E-04	3.9E-08
Te-131m	7.4E-11	8.0E-06	9.3E-06
Te-131	4.0E-12	8.0E-05	5.0E-08
I-131	1.2E-08	1.0E-06	1.2E-02
Te-132	2.3E-09	9.0E-06	2.5E-04
I-132	3.6E-10	1.0E-04	3.6E-06
I-133	3.3E-09	7.0E-06	4.6E-04
I-134	8.5E-11	4.0E-04	2.1E-07
Cs-134	2.0E-07	9.0E-07	2.3E-01
I-135	9.1E-10	3.0E-05	3.0E-05
Cs-136	1.5E-07	6.0E-06	2.6E-02
Cs-137	1.5E-07	1.0E-06	1.5E-01
Ba-140	5.8E-10	8.0E-06	7.2E-05
La-140	7.8E-10	9.0E-06	8.6E-05
Ce-141	2.9E-11	3.0E-05	9.5E-07
Ce-143	2.0E-11	2.0E-05	9.9E-07
PR-143	1.4E-11	2.5E-05	5.4E-07
Ce-144	3.3E-10	3.0E-06	1.1E-04
Pr-144	3.3E-10	6.0E-04	5.5E-07
H-3	1.1E-04	1.0E-03	1.1E-01
			Total = 5.3E-01

Notes:

1. Annual average discharge concentration based on release of average daily discharge for 292 days per year with 6000 gpm dilution flow.
2. Effluent concentrations limits are from Reference 1.

[This page intentionally blank]

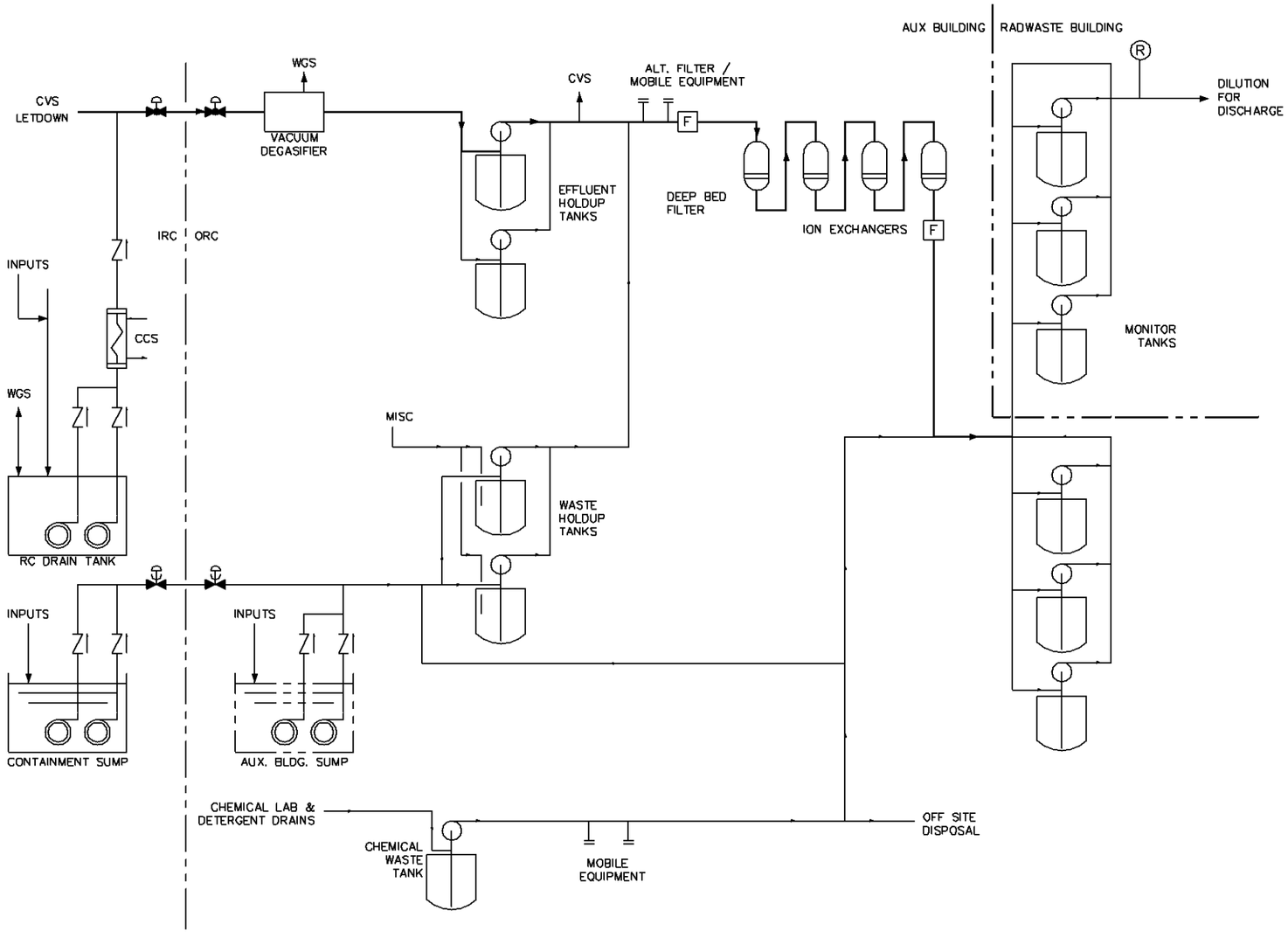

Figure 11.2-1

Liquid Radwaste System
Simplified Piping and Instrumentation Diagram
(REF) WLS

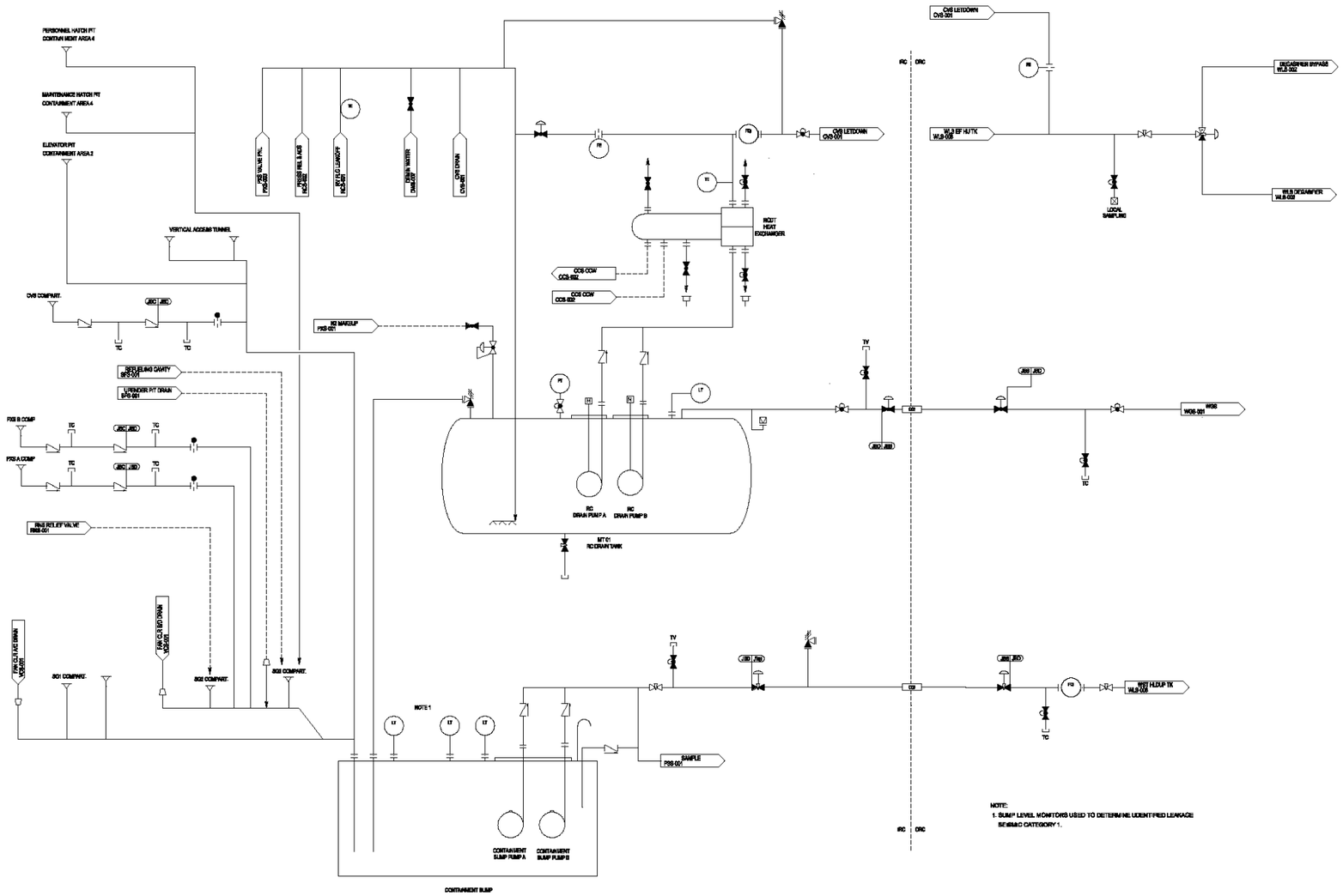

Figure 11.2-2 (Sheet 1 of 8)

Liquid Radwaste System
Piping and Instrumentation Diagram
(REF) WLS 001

Figure represents system functional arrangement. Details internal to the system may differ as a result of implementation factors such as vendor-specific component requirements.

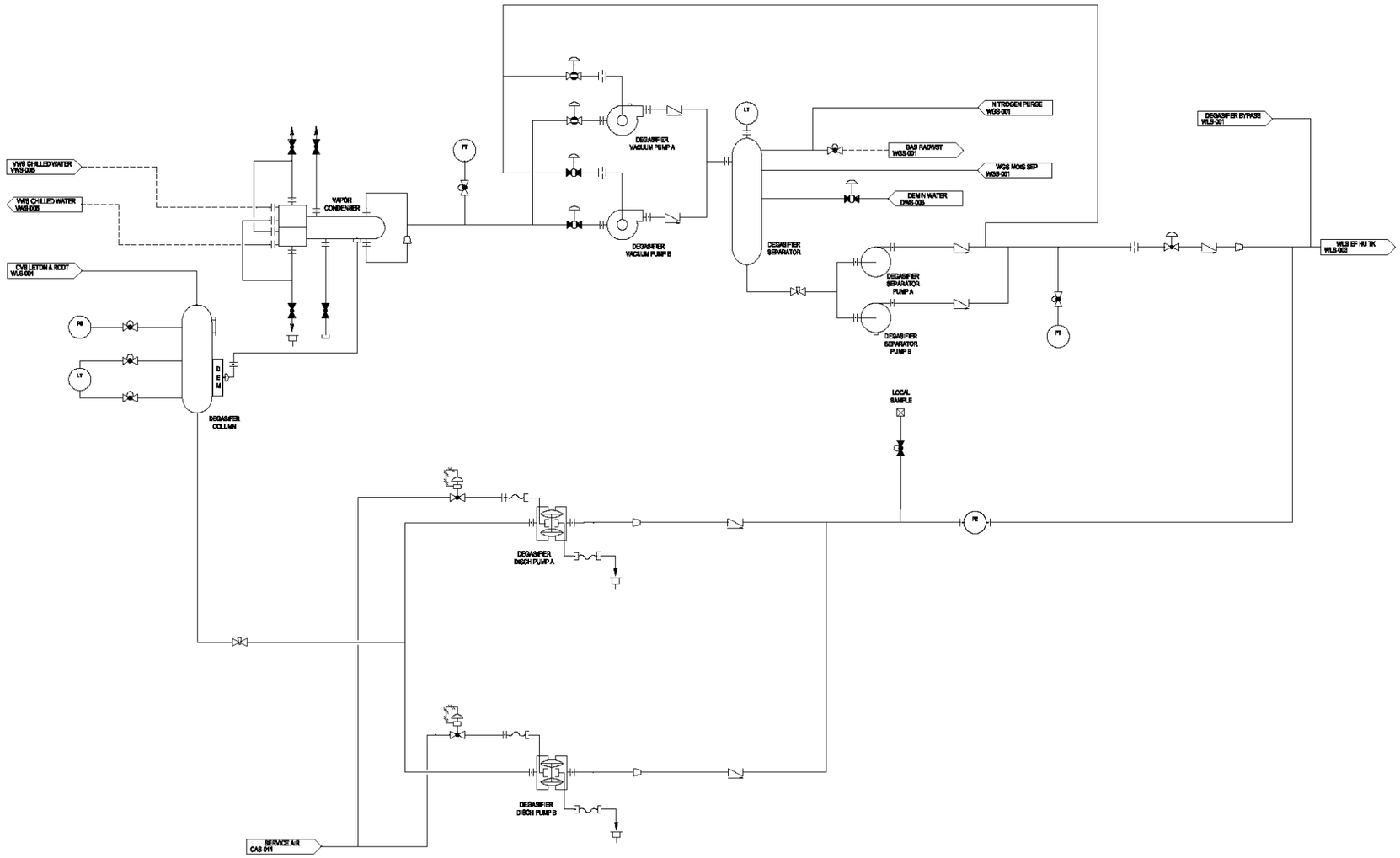

Inside Auxiliary Building

Figure 11.2-2 (Sheet 2 of 8)

Liquid Radwaste System
Piping and Instrumentation Diagram
(REF) WLS 002

Figure represents system functional arrangement. Details internal to the system may differ as a result of implementation factors such as vendor-specific component requirements.

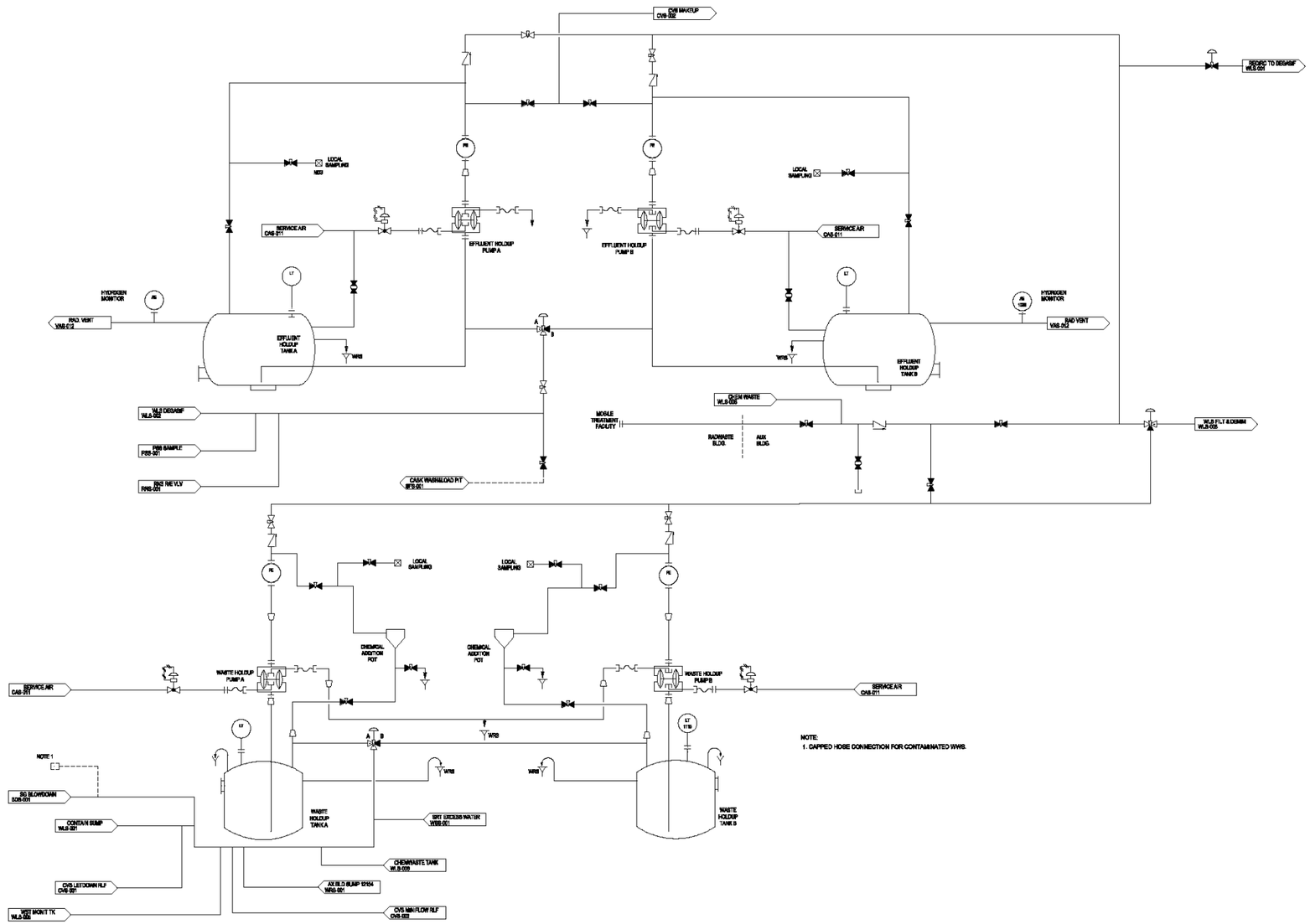

Figure 11.2-2 (Sheet 3 of 8)

Liquid Radwaste System
Piping and Instrumentation Diagram
(REF WLS 003)

Figure represents system functional arrangement. Details internal to the system may differ as a result of implementation factors such as vendor-specific component requirements.

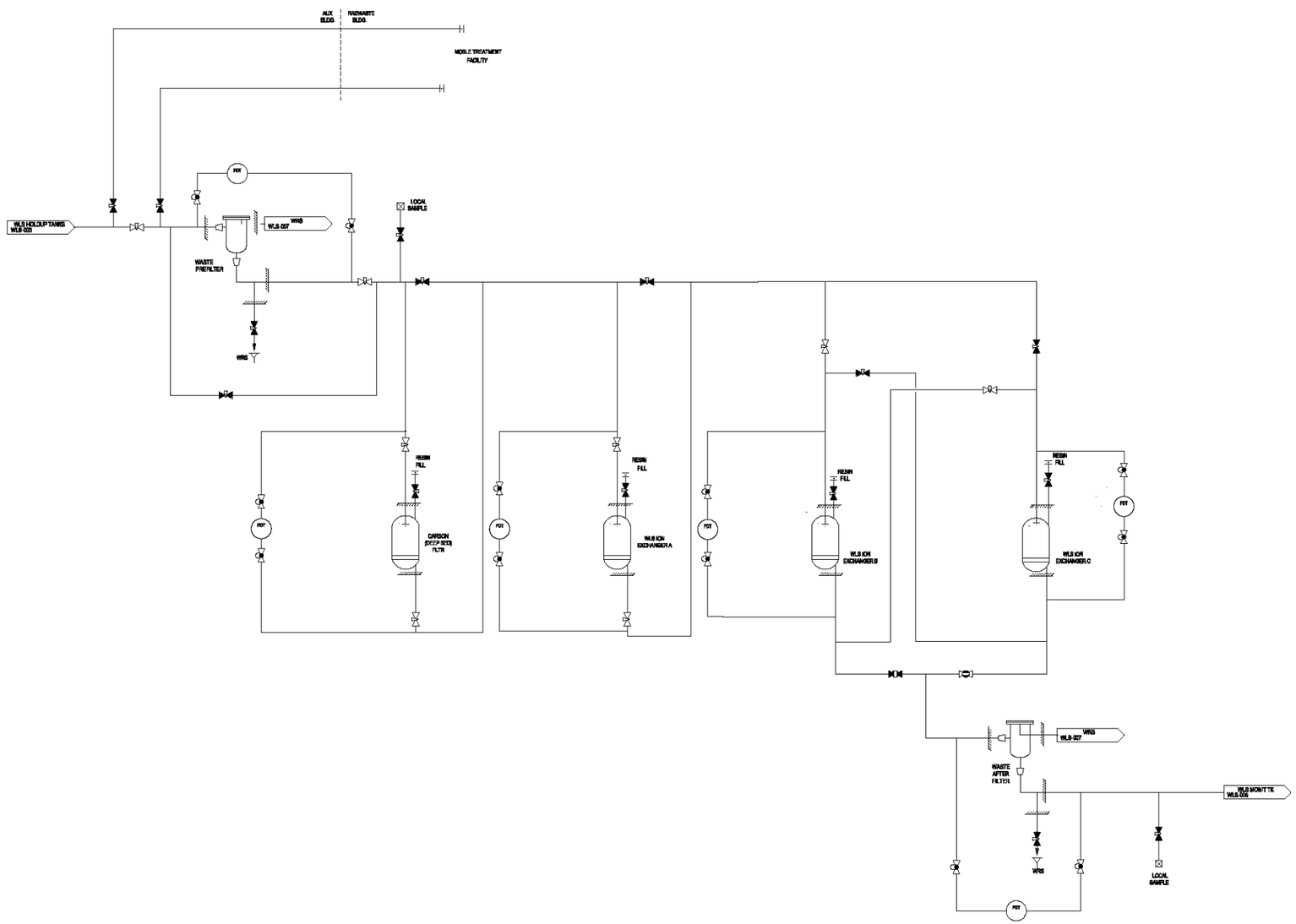

Figure 11.2-2 (Sheet 4 of 8)

Liquid Radwaste System
Piping and Instrumentation Diagram
(REF) WLS 004

Figure represents system functional arrangement. Details internal to the system may differ as a result of implementation factors such as vendor-specific component requirements.

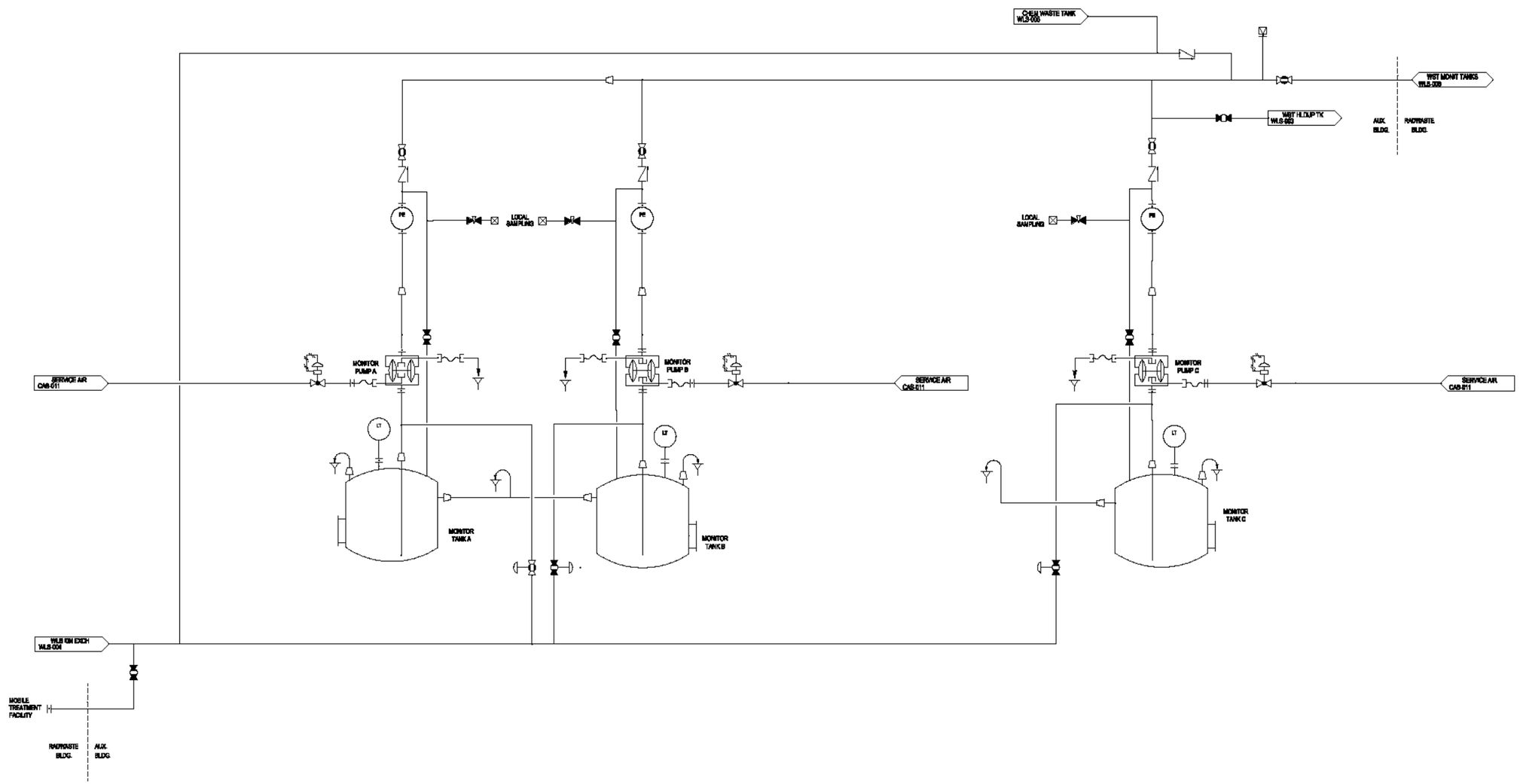

Figure 11.2-2 (Sheet 5 of 8)

Liquid Radwaste System
Piping and Instrumentation Diagram
(REF) WLS 005

Figure represents system functional arrangement. Details internal to the system may differ as a result of implementation factors such as vendor-specific component requirements.

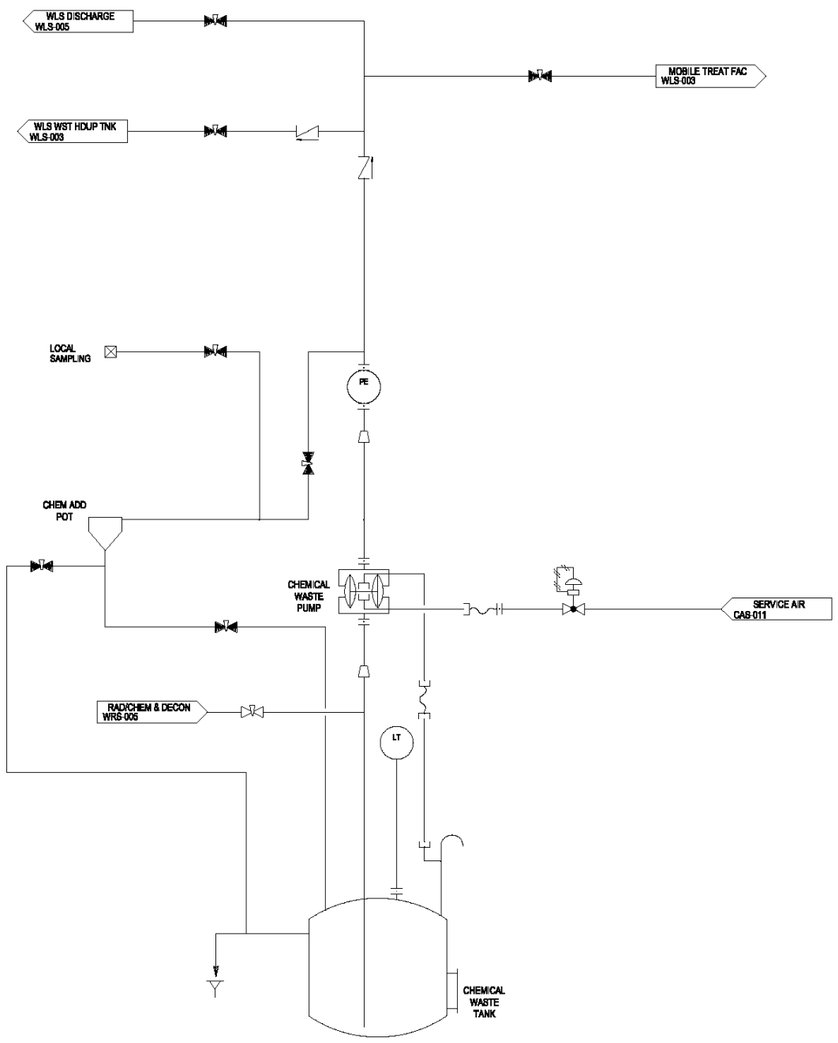

Inside Auxiliary Building

Figure 11.2-2 (Sheet 6 of 8)

Liquid Radwaste System
Piping and Instrumentation Diagram
(REF) WLS 006

Figure represents system functional arrangement. Details internal to the system may differ as a result of implementation factors such as vendor-specific component requirements.

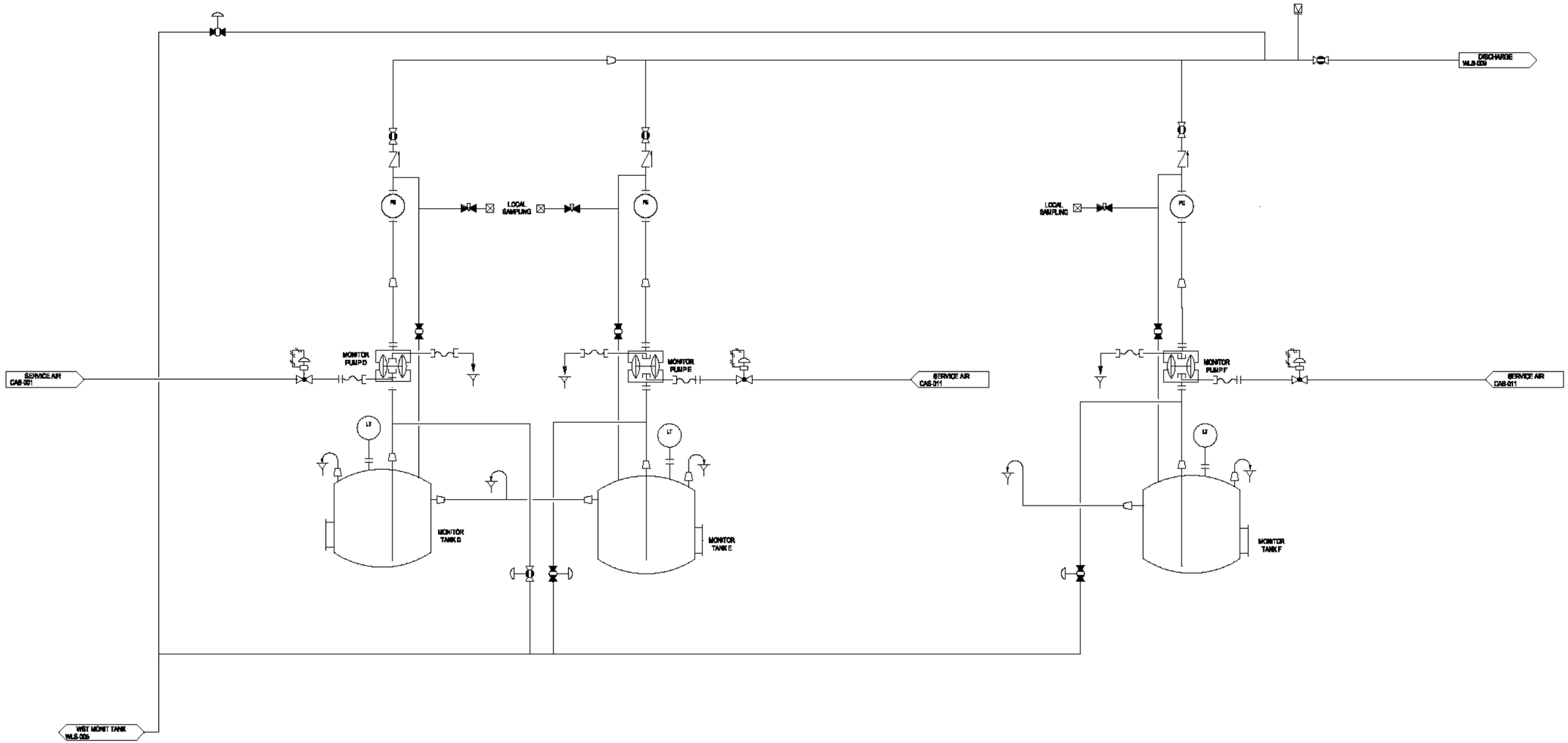

Inside Radwaste Building

Figure 11.2-2 (Sheet 7 of 8)

Liquid Radwaste System
Piping and Instrumentation Diagram
(REF) WLS 008

Figure represents system functional arrangement. Details internal to the system may differ as a result of implementation factors such as vendor-specific component requirements.

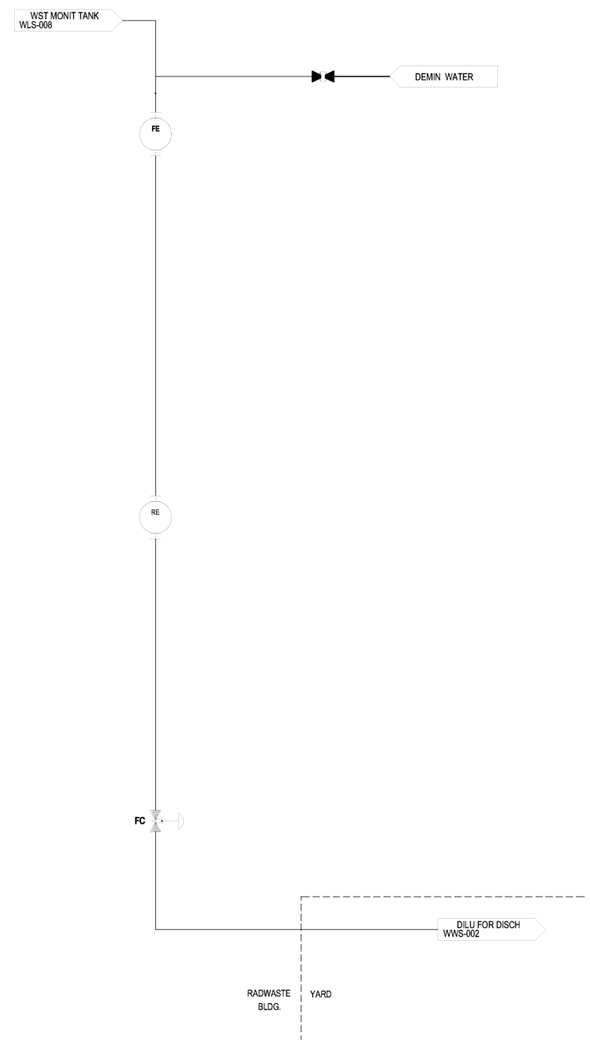

Inside Radwaste Building

Figure 11.2-2 (Sheet 8 of 8)

Liquid Radwaste System
Piping and Instrumentation Diagram
(REF) WLS 009

Figure represents system functional arrangement. Details internal to the system may differ as a result of implementation factors such as vendor-specific component requirements.