2.7 HVAC Systems

2.7.1 Nuclear Island Nonradioactive Ventilation System

Design Description

The nuclear island nonradioactive ventilation system (VBS) serves the main control room (MCR), control support area (CSA), Class 1E dc equipment rooms, Class 1E instrumentation and control (I&C) rooms, Class 1E electrical penetration rooms, Class 1E battery rooms, remote shutdown room (RSR), reactor coolant pump trip switchgear rooms, adjacent corridors, and passive containment cooling system (PCS) valve room during normal plant operation. The VBS consists of the following independent subsystems: the main control room/control support area HVAC subsystem, the class 1E electrical room HVAC subsystem, and the passive containment cooling system valve room heating and ventilation subsystem. The VBS provides heating, ventilation, and cooling to the areas served when ac power is available. The system provides breathable air to the control room and maintains the main control room and control support area areas at a slightly positive pressure with respect to the adjacent rooms and outside environment during normal operations. The VBS monitors the main control room supply air for radioactive particulate and iodine concentrations and provides filtration of main control room/control support area air during conditions of abnormal (high) airborne radioactivity. In addition, the VBS isolates the HVAC penetrations in the main control room boundary on "high-high" particulate or iodine radioactivity in the main control room supply air duct or on a loss of ac power for more than 10 minutes. The Sanitary Drainage System (SDS) also isolates a penetration in the main control room boundary on “high-high” particulate or iodine radioactivity in the main control room supply air duct or on a loss of ac power for more than 10 minutes. Additional penetrations from the SDS and Potable Water System (PWS) into the main control room boundary are maintained leak tight using a loop seal in the piping, and the Waste Water System (WWS) is isolated using a normally closed safety related manual isolation valve. These features support operation of the main control room emergency habitability system (VES), and have been included in Tables 2.7.1-1 and 2.7.1-2.

The VBS is as shown in Figure 2.7.1-1 and the component locations of the VBS are as shown in Table 2.7.1-5.

1. The functional arrangement of the VBS is as described in the Design Description of this subsection 2.7.1.

2. a) The components identified in Table 2.7.1-1 as ASME Code Section III are designed and constructed in accordance with ASME Code Section III requirements.

   b) The piping identified in Table 2.7.1-2 as ASME Code Section III is designed and constructed in accordance with ASME Code Section III requirements.

3. a) Pressure boundary welds in components identified in Table 2.7.1-1 as ASME Code Section III meet ASME Code Section III requirements.

   b) Pressure boundary welds in piping identified in Table 2.7.1-2 as ASME Code Section III meet ASME Code Section III requirements.

4. a) The components identified in Table 2.7.1-1 as ASME Code Section III retain their pressure boundary integrity at their design pressure.

   b) The piping identified in Table 2.7.1-2 as ASME Code Section III retains its pressure boundary integrity at its design pressure.

5. The seismic Category I equipment identified in Table 2.7.1-1 can withstand seismic design basis loads without loss of safety function.

6. a) The Class 1E components identified in Table 2.7.1-1 are powered from their respective Class 1E division.

   b) Separation is provided between VBS Class 1E divisions, and between Class 1E divisions and non-Class 1E cable.

7. The VBS and SDS provide the safety-related function to isolate the pipes that penetrate the MCR pressure boundary.

8. The VBS provides the following nonsafety-related functions:

   a) The VBS provides cooling to the MCR, CSA, RSR, and Class 1E electrical rooms.

   b) The VBS provides ventilation cooling to the Class 1E battery rooms.

   c) The VBS maintains MCR and CSA habitability when radioactivity is detected.

   d) The VBS provides ventilation cooling via the ancillary equipment in Table 2.7.1-3 to the MCR and the division B&C Class 1E I&C rooms.

9. Safety-related displays identified in Table 2.7.1-1 can be retrieved in the MCR.

10. a) Controls exist in the MCR to cause the remotely operated valves identified in Table 2.7.1-1 to perform their active functions.

    b) The valves identified in Table 2.7.1-1 as having protection and safety monitoring system (PMS) control perform their active safety function after receiving a signal from the PMS.

11. After loss of motive power, the valves identified in Table 2.7.1-1 assume the indicated loss of motive power position.

12. Controls exist in the MCR to cause the components identified in Table 2.7.1-3 to perform the listed function.

13. Displays of the parameters identified in Table 2.7.1-3 can be retrieved in the MCR.

14. The background noise level in the MCR and RSR does not exceed 65 dB(A) when the VBS is operating.

Inspections, Tests, Analyses, and Acceptance Criteria

Table 2.7.1-4 specifies the inspections, tests, analyses, and associated acceptance criteria for the VBS.

Table 2.7.1-1

Equipment Name	Tag No.	ASME Code Section III	Seismic Cat. I	Remotely Operated Valve	Class 1E/ Qual. for Harsh Envir.	Safety-Related Display	Control PMS/DAS(1)	Active Function	Loss of Motive Power Position
MCR Supply Air Isolation Valve	VBS-PL-V186	Yes	Yes	Yes	Yes/No	Yes (Valve Position)	Yes/No	Transfer Closed	As Is
MCR Supply Air Isolation Valve	VBS-PL-V187	Yes	Yes	Yes	Yes/No	Yes (Valve Position)	Yes/No	Transfer Closed	As Is
MCR Return Air Isolation Valve	VBS-PL-V188	Yes	Yes	Yes	Yes/No	Yes (Valve Position)	Yes/No	Transfer Closed	As Is
MCR Return Air Isolation Valve	VBS-PL-V189	Yes	Yes	Yes	Yes/No	Yes (Valve Position)	Yes/No	Transfer Closed	As Is
MCR Exhaust Air Isolation Valve	VBS-PL-V190	Yes	Yes	Yes	Yes/No	Yes (Valve Position)	Yes/No	Transfer Closed	As Is
MCR Exhaust Air Isolation Valve	VBS-PL-V191	Yes	Yes	Yes	Yes/No	Yes (Valve Position)	Yes/No	Transfer Closed	As Is
PWS MCR Isolation Valve	PWS-PL-V418	Yes	Yes	No	-/-	No	No	Transfer Closed	-
PWS MCR Isolation Valve	PWS-PL-V420	Yes	Yes	No	-/-	No	No	Transfer Closed	-
PWS MCR Vacuum Relief	PWS-PL-V498	Yes	Yes	No	-/-	No	No	Transfer Open	-
MCR SDS (Vent) Isolation Valve	SDS-PL-V001	Yes	Yes	Yes	Yes/No	Yes (Valve Position)	Yes/No	Transfer Closed	As Is
MCR SDS (Vent) Isolation Valve	SDS-PL-V002	Yes	Yes	Yes	Yes/No	Yes (Valve Position)	Yes/No	Transfer Closed	As Is

Table 2.7.1-1 (cont.)

Equipment Name	Tag No.	ASME Code Section III	Seismic Cat. I	Remotely Operated Valve	Class 1E/ Qual. for Harsh Envir.	Safety-Related Display	Control PMS/DAS(1)	Active Function	Loss of Motive Power Position
MCR WWS Isolation Valve	WWS-PL-V506	Yes	Yes	No	–	No	No	–	–

1. DAS = diverse actuation system

Table 2.7.1-2

Line Name	Line Number	ASME Code Section III	Leak Before Break	Functional Capability Required
Main Control Room Supply	VBS-L311	Yes	No	No
Main Control Room Exhaust	VBS-L312	Yes	No	No
Main Control Room Toilet Exhaust	VBS-L313	Yes	No	No
Main Control Room Sanitary Vent Line	SDS-PL-L035	Yes	No	No
Main Control Room Sanitary Drain Line	SDS-PL-L030	Yes	No	No
Main Control Room Water Line	PWS-PL-L319	Yes	No	No
Main Control Room Water Line	PWS-PL-L320	Yes	No	No
Main Control Room Waste Water Line	WWS-PL-L808	Yes	No	No
Main Control Room Water Line	WWS-PL-L851	Yes	No	No

Table 2.7.1-3

Equipment	Tag No.	Display	Control Function
Supplemental Air Filtration Unit Fan A	VBS-MA-03A	Yes (Run Status)	Start
Supplemental Air Filtration Unit Fan B	VBS-MA-03B	Yes (Run Status)	Start
MCR/CSA Supply Air Handling Units (AHU) A Fans	VBS-MA-01A VBS-MA-02A	Yes (Run Status)	Start
MCR/CSA Supply AHU B Fans	VBS-MA-01B VBS-MA-02B	Yes (Run Status)	Start
Division "A" and "C" Class 1E Electrical Room AHU A Fans	VBS-MA-05A VBS-MA-06A	Yes (Run Status)	Start
Division "A" and "C" Class 1E Electrical Room AHU C Fans	VBS-MA-05C VBS-MA-06C	Yes (Run Status)	Start
Division "B" and "D" Class 1E Electrical Room AHU B Fans	VBS-MA-05B VBS-MA-06B	Yes (Run Status)	Start
Division "B" and "D" Class 1E Electrical Room AHU D Fans	VBS-MA-05D VBS-MA-06D	Yes (Run Status)	Start
Division "A" and "C" Class 1E Battery Room Exhaust Fans	VBS-MA-07A VBS-MA-07C	Yes (Run Status)	Start
Division "B" and "D" Class 1E Battery Room Exhaust Fans	VBS-MA-07B VBS-MA-07D	Yes (Run Status)	Start
MCR Ancillary Fans	VBS-MA-10A VBS-MA-10B	No	Run
Division B Room Ancillary Fan	VBS-MA-11	No	Run
Division C Room Ancillary Fan	VBS-MA-12	No	Run

Table 2.7.1-4
Inspections, Tests, Analyses, and Acceptance Criteria

Design Commitment	Inspections, Tests, Analyses	Acceptance Criteria
1. The functional arrangement of the VBS is as described in the Design Description of this subsection 2.7.1	Inspection of the as-built system will be performed.	The as-built VBS conforms with the functional arrangement described in the Design Description of this subsection 2.7.1.
2.a) The components identified in Table 2.7.1-1 as ASME Code Section III are designed and constructed in accordance with ASME Code Section III requirements.	Inspection will be conducted of the as-built components as documented in the ASME design reports.	The ASME Code Section III design reports exist for the as-built components identified in Table 2.7.1-1 as ASME Code Section III.
2.b) The piping identified in Table 2.7.1-2 as ASME Code Section III is designed and constructed in accordance with ASME Code Section III requirements.	Inspection will be conducted of the as-built components as documented in the ASME design reports.	The ASME code Section III design reports exist for the as-built piping identified in Table 2.7.1-2 as ASME Code Section III.
3.a) Pressure boundary welds in components identified in Table 2.7.1-1 as ASME Code Section III meet ASME Code Section III requirements.	Inspection of the as-built pressure boundary welds will be performed in accordance with the ASME Code Section III.	A report exists and concludes that the ASME Code Section III requirements are met for nondestructive examination of pressure boundary welds.
3.b) Pressure boundary welds in piping identified in Table 2.7.1-2 as ASME Code Section III meet ASME Code Section III requirements.	Inspection of the as-built pressure boundary welds will be performed in accordance with the ASME Code Section III.	A report exists and concludes that the ASME Code Section III requirements are met for nondestructive examination of pressure boundary welds.
4.a) The components identified in Table 2.7.1-1 as ASME Code Section III retain their pressure boundary integrity at their design pressure.	A pressure test will be performed on the components required by the ASME Code Section III to be pressure tested.	A report exists and concludes that the results of the pressure test of the components identified in Table 2.7.1-1 as ASME Code Section III conform with the requirements of the ASME Code Section III.
4.b) The piping identified in Table 2.7.1-2 as ASME Code Section III retains its pressure boundary integrity at its design pressure.	A pressure test will be performed on the piping required by the ASME Code Section III to be pressure tested.	A report exists and concludes that the results of the pressure test of the piping identified in Table 2.7.1-2 as ASME Code Section III conform with the requirements of the ASME Code Section III.

Table 2.7.1-4 (cont.)
Inspections, Tests, Analyses, and Acceptance Criteria

Design Commitment	Inspections, Tests, Analyses	Acceptance Criteria
5. The seismic Category I equipment identified in Table 2.7.1-1 can withstand seismic design basis loads without loss of safety function.	i) Inspection will be performed to verify that the seismic Category I equipment identified in Table 2.7.1-1 is located on the Nuclear Island. ii) Type tests, analyses, or a combination of type tests and analyses of seismic Category I equipment will be performed. iii) Inspection will be performed for the existence of a report verifying that the as-built equipment including anchorage is seismically bounded by the tested or analyzed conditions.	i) The seismic Category I equipment identified in Table 2.7.1-1 is located on the Nuclear Island. ii) A report exists and concludes that the seismic Category I equipment can withstand seismic design basis loads without loss of safety function. iii) A report exists and concludes that the as-built equipment including anchorage is seismically bounded by the tested or analyzed conditions.
6.a) The Class 1E components identified in Table 2.7.1-1 are powered from their respective Class 1E division.	Testing will be performed on the VBS by providing a simulated test signal in each Class 1E division.	A simulated test signal exists at the Class 1E equipment identified in Table 2.7.1-1 when the assigned Class 1E division is provided the test signal.
6.b) Separation is provided between VBS Class 1E divisions, and between Class 1E divisions and non-Class 1E cable.	See Tier 1 Material, Table 3.3-6, item 7.d.	See Tier 1 Material, Table 3.3-6, item 7.d.
7. The VBS and SDS provide the safety-related function to isolate the pipe that penetrates the MCR pressure boundary.	See item 10.b in this table.	See item 10.b in this table.
8.a) The VBS provides cooling to the MCR, CSA, RSR, and Class 1E electrical rooms.	See item 12 in this table.	See item 12 in this table.
8.b) The VBS provides ventilation cooling to the Class 1E battery rooms.	See item 12 in this table.	See item 12 in this table.

Table 2.7.1-4 (cont.)
Inspections, Tests, Analyses, and Acceptance Criteria

Design Commitment	Inspections, Tests, Analyses	Acceptance Criteria
8.c) The VBS maintains MCR and CSA habitability when radioactivity is detected.	See item 12 in this table.	See item 12 in this table.
8.d) The VBS provides ventilation cooling via the ancillary equipment in Table 2.7.1-3 to the MCR and the division B&C Class 1E I&C rooms.	Testing will be performed on the components in Table 2.7.1-3.	The fans start and run.
9. Safety-related displays identified in Table 2.7.1-1 can be retrieved in the MCR.	Inspection will be performed for retrievability of the safety-related displays in the MCR.	Safety-related displays identified in Table 2.7.1-1 can be retrieved in the MCR.
10.a) Controls exist in the MCR to cause the remotely operated valves identified in Table 2.7.1-1 to perform their active functions.	Stroke testing will be performed on the remotely operated valves identified in Table 2.7.1-1 using the controls in the MCR.	Controls in the MCR operate to cause the remotely operated valves identified in Table 2.7.1-1 to perform their active functions.
10.b) The valves identified in Table 2.7.1-1 as having PMS control perform their active safety function after receiving a signal from the PMS.	Testing will be performed using real or simulated signals into the PMS.	The valves identified in Table 2.7.1-1 as having PMS control perform their active safety function after receiving a signal from PMS.
11. After loss of motive power, the remotely operated valves identified in Table 2.7.1-1 assume the indicated loss of motive power position.	Testing of the remotely operated valves will be performed under the conditions of loss of motive power.	Upon loss of motive power, each remotely operated valves identified in Table 2.7.1-1 assumes the indicated loss of motive power position.
12. Controls exist in the MCR to cause the components identified in Table 2.7.1-3 to perform the listed function.	Testing will be performed on the components in Table 2.7.1-3 using controls in the MCR.	Controls in the MCR operate to cause the components listed in Table 2.7.1-3 to perform the listed functions.
13. Displays of the parameters identified in Table 2.7.1-3 can be retrieved in the MCR.	Inspection will be performed for retrievability of the parameters in the MCR.	The displays identified in Table 2.7.1-3 can be retrieved in the MCR.
14. The background noise level in the MCR and RSR does not exceed 65 dB(A) when the VBS is operating.	The as-built VBS will be operated, and background noise levels in the MCR and RSR will be measured.	The background noise level in the MCR and RSR does not exceed 65 dB(A) when the VBS is operating.

Table 2.7.1-5		
Component Name	**Tag No.**	**Component Location**
Supplemental Air Filtration Unit A	VBS-MS-01A	Auxiliary Building
Supplemental Air Filtration Unit B	VBS-MS-01B	Auxiliary Building
MCR/CSA Supply Air Handling Unit A	VBS-MS-02A	Auxiliary Building
MCR/CSA Supply Air Handling Unit B	VBS-MS-02B	Annex Building
Division "A" and "C" Class 1E Electrical Room AHU A	VBS-MS-03A	Auxiliary Building
Division "A" and "C" Class 1E Electrical Room AHU C	VBS-MS-03C	Auxiliary Building
Division "B" and "D" Class 1E Electrical Room AHU B	VBS-MS-03B	Auxiliary Building
Division "B" and "D" Class 1E Electrical Room AHU D	VBS-MS-03D	Auxiliary Building
MCR Toilet Exhaust Fan	VBS-MA-04	Auxiliary Building
Division "A&C" Class 1E Battery Room Exhaust Fan	VBS-MA-07A	Auxiliary Building
Division "A&C" Class 1E Battery Room Exhaust Fan	VBS-MA-07C	Auxiliary Building
Division "B&D" Class 1E Battery Room Exhaust Fan	VBS-MA-07B	Auxiliary Building
Division "B&D" Class 1E Battery Room Exhaust Fan	VBS-MA-07D	Auxiliary Building
PCS Valve Room Vent Fan	VBS-MA-08	Containment Shield Building
CSA Toilet Exhaust Fan	VBS-MA-09	Annex Building
MCR Ancillary Fan A	VBS-MA-10A	Auxiliary Building
MCR Ancillary Fan B	VBS-MA-10B	Auxiliary Building
Division B Ancillary Fan	VBS-MA-11	Auxiliary Building
Division C Ancillary Fan	VBS-MA-12	Auxiliary Building

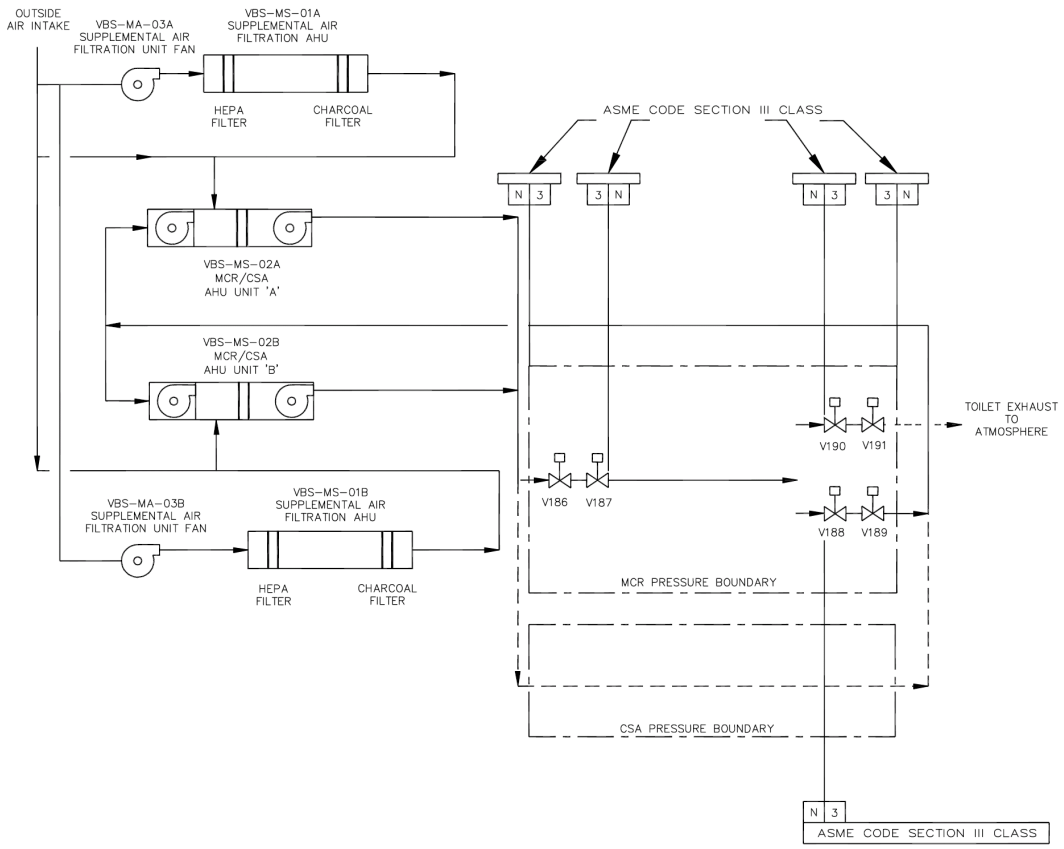

Figure 2.7.1-1 (Sheet 1 of 2)
Nuclear Island Nonradioactive Ventilation System

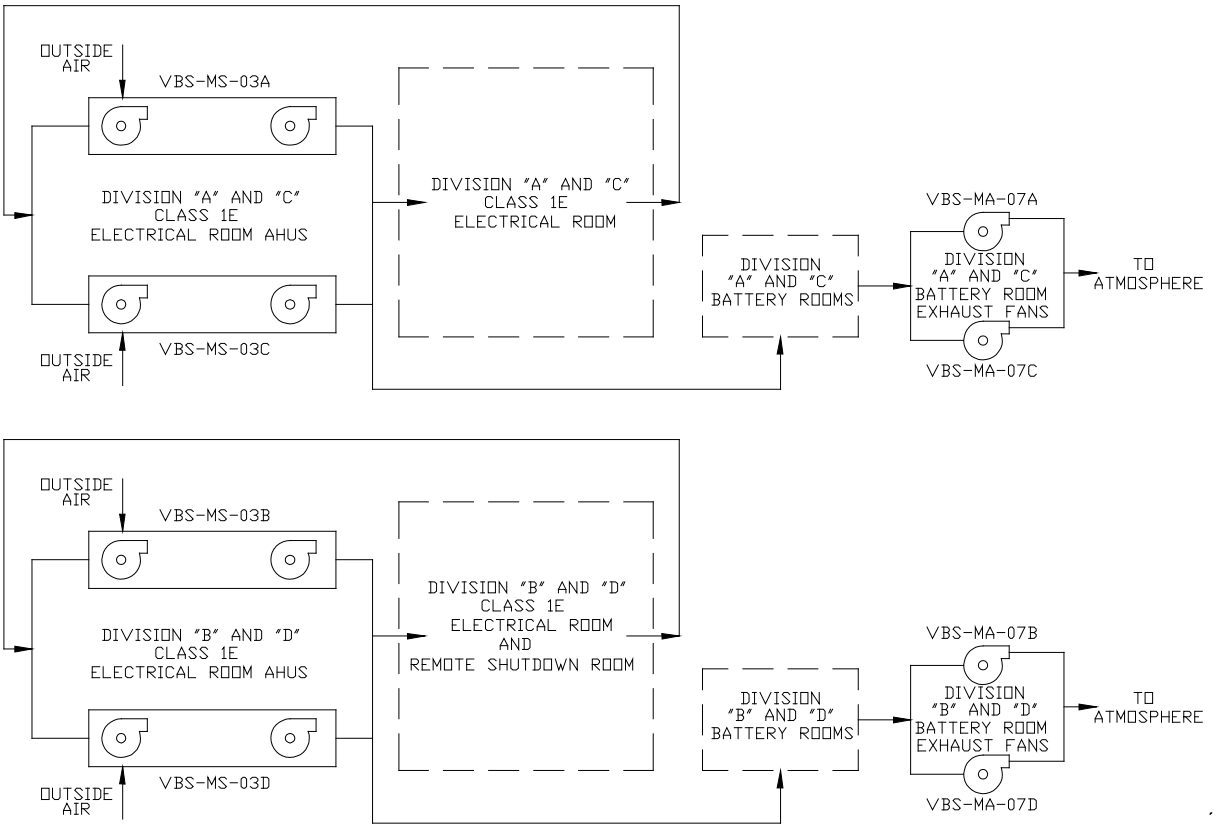

Figure 2.7.1-1 (Sheet 2 of 2)
Nuclear Island Nonradioactive Ventilation System

2.7.2 Central Chilled Water System

Design Description

The plant heating, ventilation, and air conditioning (HVAC) systems require chilled water as a cooling medium to satisfy the ambient air temperature requirements for the plant. The central chilled water system (VWS) supplies chilled water to the HVAC systems and is functional during reactor full-power and shutdown operation. The VWS also provides chilled water to selected process systems.

The VWS is as shown in Figure 2.7.2-1 and the component locations of the VWS are as shown Table 2.7.2-3.

1. The functional arrangement of the VWS is as described in the Design Description of this Section 2.7.2.

2. The VWS provides the safety-related function of preserving containment integrity by isolation of the VWS lines penetrating the containment.

3. The VWS provides the following nonsafety-related functions:

   a) The VWS provides chilled water to the supply air handling units serving the MCR, the Class 1E electrical rooms, and the unit coolers serving the RNS and CVS pump rooms.

   b) The VWS air-cooled chillers transfer heat from the VWS to the surrounding atmosphere.

4. Controls exist in the MCR to cause the components identified in Table 2.7.2-1 to perform the listed function.

5. Displays of the parameters identified in Table 2.7.2-1 can be retrieved in the MCR.

Inspections, Tests, Analyses, and Acceptance Criteria

Table 2.7.2-2 specifies the inspections, tests, analyses, and associated acceptance criteria for the VWS.

Table 2.7.2-1

Equipment Name	Tag No.	Display	Control Function
Air-cooled Chiller	VWS-MS-02	Yes (Run Status)	Start
Air-cooled Chiller	VWS-MS-03	Yes (Run Status)	Start
Air-cooled Chiller Pump	VWS-MP-02	Yes (Run Status)	Start
Air-cooled Chiller Pump	VWS-MP-03	Yes (Run Status)	Start
CVS Pump Room Unit Cooler Fan A	VAS-MA-07A	Yes (Run Status)	Start
CVS Pump Room Unit Cooler Fan B	VAS-MA-07B	Yes (Run Status)	Start
RNS Pump Room Unit Cooler Fan A	VAS-MA-08A	Yes (Run Status)	Start
RNS Pump Room Unit Cooler Fan B	VAS-MA-08B	Yes (Run Status)	Start
Air-cooled Chiller Water Valve	VWS-PL-V210	Yes (Position Status)	Open
Air-cooled Chiller Water Valve	VWS-PL-V253	Yes (Position Status)	Open

Table 2.7.2-2
Inspections, Tests, Analyses, and Acceptance Criteria

Design Commitment	Inspections, Tests, Analyses	Acceptance Criteria
1. The functional arrangement of the VWS is as described in the Design Description of this Section 2.7.2.	Inspection of the as-built system will be performed.	The as-built VWS conforms with the functional arrangement as described in the Design Description of this Section 2.7.2.
2. The applicable portions of the VWS provide the safety-related function of preserving containment integrity by isolation of the VWS lines penetrating the containment.	See Tier 1 Material, Table 2.2.1-3, items 1 and 7.	See Tier 1 Material, Table 2.2.1-3, items 1 and 7.
3.a) The VWS provides chilled water to the supply air handling units serving the MCR, the Class 1E electrical rooms, and the unit coolers serving the RNS and CVS pump rooms.	Testing will be performed by measuring the flow rates to the chilled water cooling coils.	The water flow to each cooling coil equals or exceeds the following: Coil — Flow (gpm) VBS MY C01A/B — 138 VBS MY C02A/C — 108 VBS MY C02B/D — 84 VAS MY C07A/B — 24 VAS MY C12A/B — 15 VAS MY C06A/B — 15
3.b) The VWS air-cooled chillers transfer heat from the VWS to the surrounding atmosphere.	Inspection will be performed for the existence of a report that determines the heat transfer capability of each air-cooled chiller.	A report exists and concludes that the heat transfer rate of each air-cooled chiller is greater than or equal to 230 tons.
4. Controls exist in the MCR to cause the components identified in Table 2.7.2-1 to perform the listed function.	Testing will be performed on the components in Table 2.7.2-1 using controls in the MCR.	Controls in the MCR operate to cause the components listed in Table 2.7.2-1 to perform the listed functions.
5. Displays of the parameters identified in Table 2.7.2-1 can be retrieved in the MCR.	Inspection will be performed for retrievability of parameters in the MCR.	The displays identified in Table 2.7.2-1 can be retrieved in the MCR.

Table 2.7.2-3		
Component Name	**Tag No.**	**Component Location**
Water Chiller Pump A	VWS-MP-01A	Turbine Building
Water Chiller Pump B	VWS-MP-01B	Turbine Building
Air Cooled Chiller Pump 2	VWS-MP-02	Auxiliary Building
Air Cooled Chiller Pump 3	VWS-MP-03	Auxiliary Building
Water Chiller A	VWS-MS-01A	Turbine Building
Water Chiller B	VWS-MS-01B	Turbine Building
Air Cooled Chiller 2	VWS-MS-02	Auxiliary Building
Air Cooled Chiller 3	VWS-MS-03	Auxiliary Building

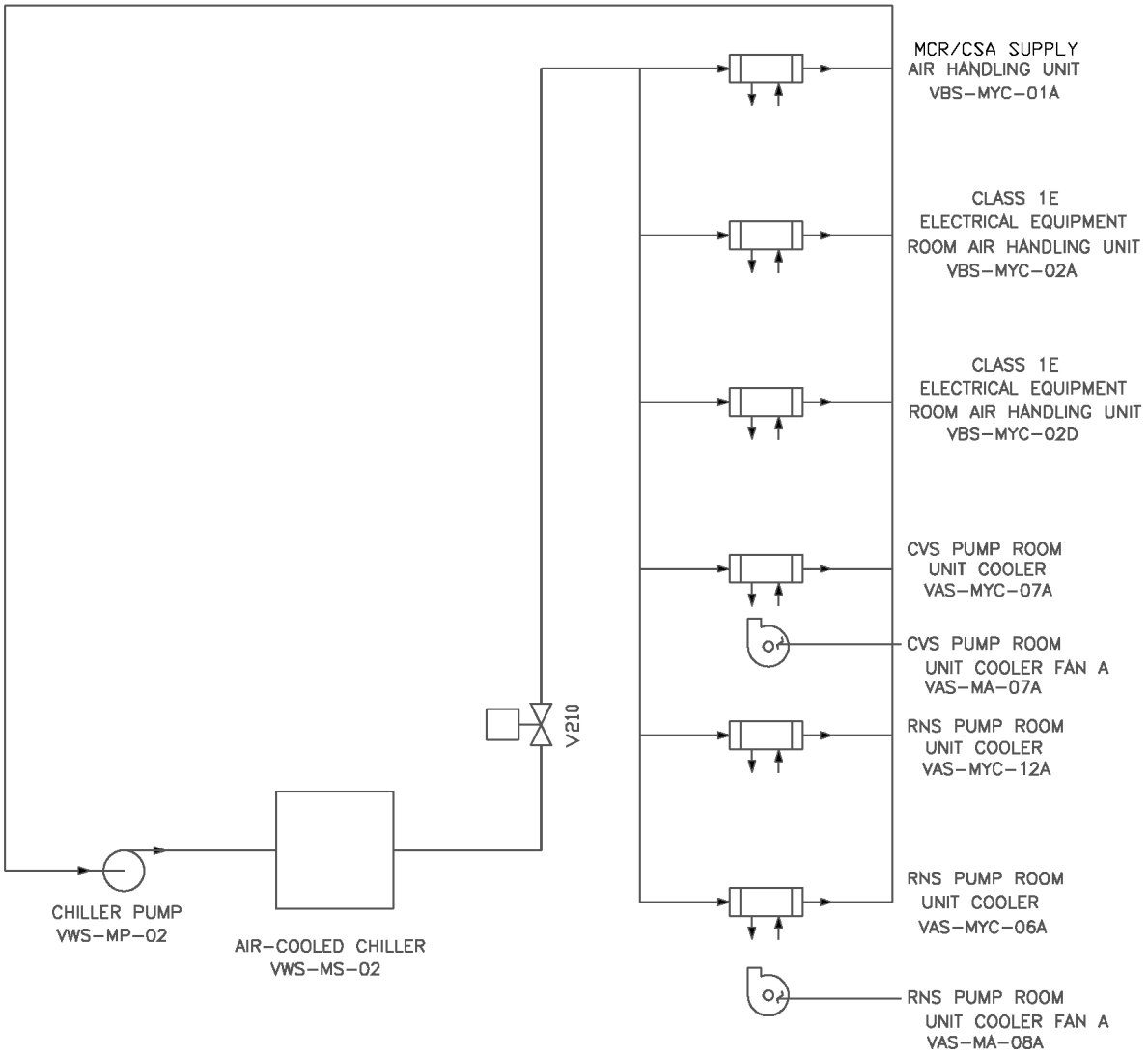

Figure 2.7.2-1 (Sheet 1 of 2)
Central Chilled Water System

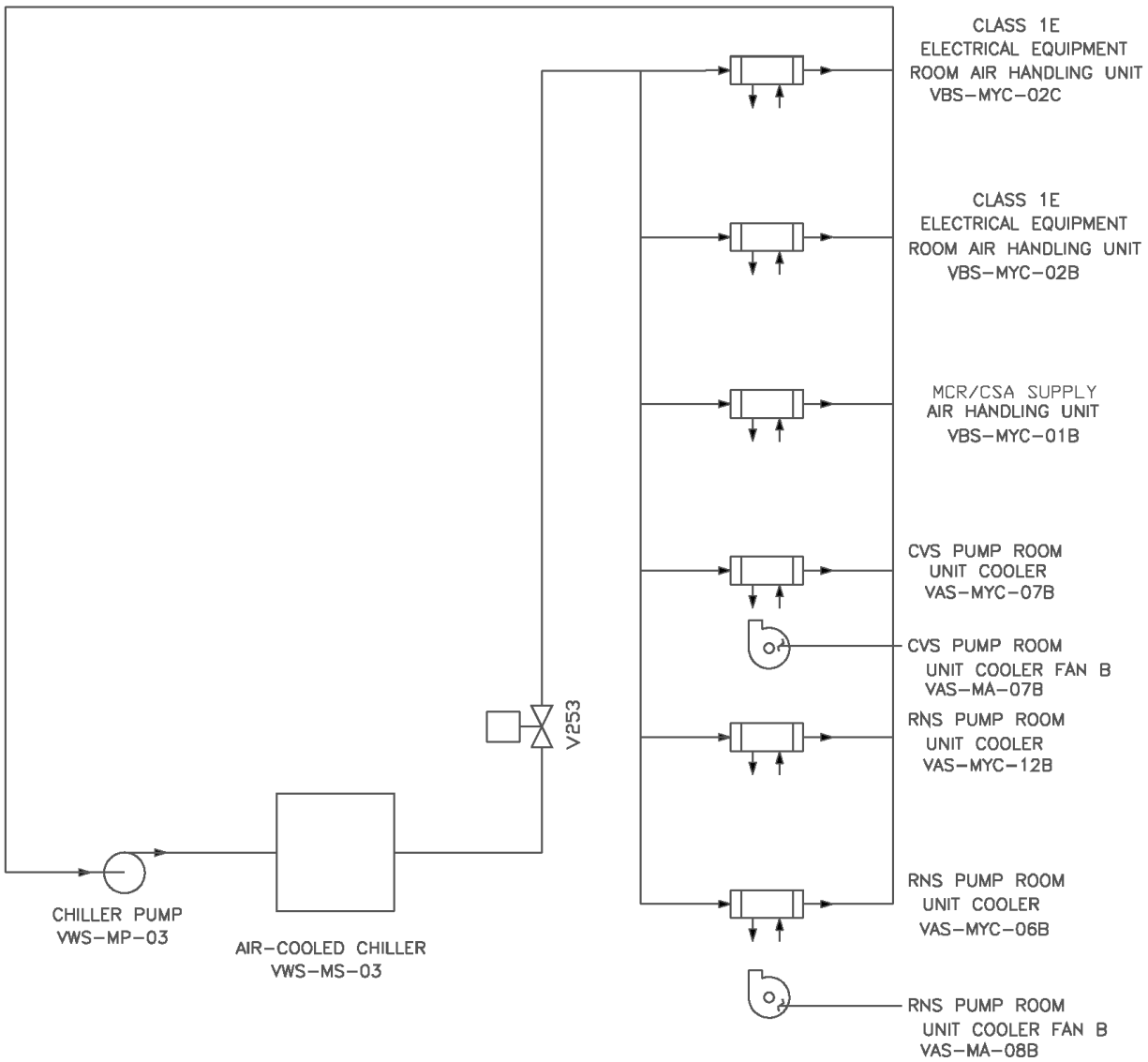

Figure 2.7.2-1 (Sheet 2 of 2)
Central Chilled Water System

2.7.3 Annex/Auxiliary Building Nonradioactive Ventilation System

Design Description

The annex/auxiliary buildings nonradioactive HVAC system (VXS) serves the nonradioactive personnel and equipment areas, electrical equipment rooms, clean corridors, the ancillary diesel generator room and demineralized water deoxygenating room in the annex building, and the main steam isolation valve compartments, reactor trip switchgear rooms, and piping and electrical penetration areas in the auxiliary building. The VXS consists of the following independent subsystems: the general area HVAC subsystem, the switchgear room HVAC subsystem, the equipment room HVAC subsystem, the MSIV compartment HVAC subsystem, the mechanical equipment areas HVAC subsystem and the valve/piping penetration room HVAC subsystem.

The VXS is as shown in Figure 2.7.3-1 and the component locations of the VXS are as shown in Table 2.7.3-3.

1. The functional arrangement of the VXS is as described in the Design Description of this Section 2.7.3.

2. The VXS provides the following nonsafety-related functions:

   a) The VXS provides cooling to the electrical switchgear, the battery charger, and the annex building nonradioactive air handling equipment rooms.

   b) The VXS provides ventilation cooling to the electrical switchgear, the battery charger, and the annex building nonradioactive air handling equipment rooms when the ZOS operates during a loss of offsite power coincident with loss of chilled water.

3. Controls exist in the main control room (MCR) to cause the components identified in Table 2.7.3-1 to perform the listed function.

4. Displays of the parameters identified in Table 2.7.3-1 can be retrieved in the MCR.

Inspections, Tests, Analyses, and Acceptance Criteria

Table 2.7.3-2 specifies the inspections, tests, analyses, and associated acceptance criteria for the VXS.

Table 2.7.3-1			
Equipment Name	**Tag No.**	**Display**	**Control Function**
Switchgear Room Air Handling Units (AHU) A Fans	VXS-MA-05A VXS-MA-06A	Yes (Run Status)	Start
Switchgear Room AHU B Fans	VXS-MA-05B VXS-MA-06B	Yes (Run Status)	Start
Equipment Room AHU A Fans	VXS-MA-01A VXS-MA-02A	Yes (Run Status)	Start
Equipment Room AHU B Fans	VXS-MA-01B VXS-MA-02B	Yes (Run Status)	Start

Table 2.7.3-2
Inspections, Tests, Analyses, and Acceptance Criteria

Design Commitment	Inspections, Tests, Analyses	Acceptance Criteria
1. The functional arrangement of the VXS is as described in the Design Description of this Section 2.7.3.	Inspection of the as-built system will be performed.	The as-built VXS conforms with the functional arrangement described in the Design Description of this Section 2.7.3.
2.a) The VXS provides cooling to the electrical switchgear, the battery charger, and the annex building nonradioactive air handling equipment rooms when the ZOS operates and chilled water is available.	See item 3 in this table.	See item 3 in this table.
2.b) The VXS provides ventilation cooling to the electrical switchgear, the battery charger, and the annex building nonradioactive air handling equipment rooms when the ZOS operates during a loss of offsite power coincident with loss of chilled water.	See item 3 in this table.	See item 3 in this table.
3. Controls exist in the MCR to cause the components identified in Table 2.7.3-1 to perform the listed function.	Testing will be performed on the components in Table 2.7.3-1 using controls in the MCR.	Controls in the MCR operate to cause the components listed in Table 2.7.3-1 to perform the listed functions.
4. Displays of the parameters identified in Table 2.7.3-1 can be retrieved in the MCR.	Inspection will be performed for retrievability of the parameters in the MCR.	The displays identified in Table 2.7.3-1 can be retrieved in the MCR.

Table 2.7.3-3		
Component Name	**Tag No.**	**Component Location**
Annex Building General Area AHU A	VXS-MS-01A	Annex Building
Annex Building General Area AHU B	VXS-MS-01B	Annex Building
Annex Building Equipment Room AHU A	VXS-MS-02A	Annex Building
Annex Building Equipment Room AHU B	VXS-MS-02B	Annex Building
MSIV Compartment A AHU-A	VXS-MS-04A	Auxiliary Building
MSIV Compartment B AHU-B	VXS-MS-04B	Auxiliary Building
MSIV Compartment B AHU-C	VXS-MS-04C	Auxiliary Building
MSIV Compartment A AHU-D	VXS-MS-04D	Auxiliary Building
Switchgear Room AHU A	VXS-MS-05A	Annex Building
Switchgear Room AHU B	VXS-MS-05B	Annex Building
Mechanical Equipment Area AHU Unit A	VXS-MS-07A	Annex Building
Mechanical Equipment Area AHU Unit B	VXS-MS-07B	Annex Building
Valve/Piping Penetration Room AHU A	VXS-MS-08A	Auxiliary Building
Valve/Piping Penetration Room AHU B	VXS-MS-08B	Auxiliary Building
Battery Room #1 Exhaust Fan	VXS-MA-09A	Annex Building
Battery Room #2 Exhaust Fan	VXS-MA-09B	Annex Building
Toilet Exhaust Fan	VXS-MA-13	Annex Building
Annex Building Nonradioactive Air Handling Equipment Room Unit Heater A	VXS-MY-W01A	Annex Building
Annex Building Nonradioactive Air Handling Equipment Room Unit Heater B	VXS-MY-W01B	Annex Building
Annex Building Nonradioactive Air Handling Equipment Room Unit Heater C	VXS-MY-W01C	Annex Building

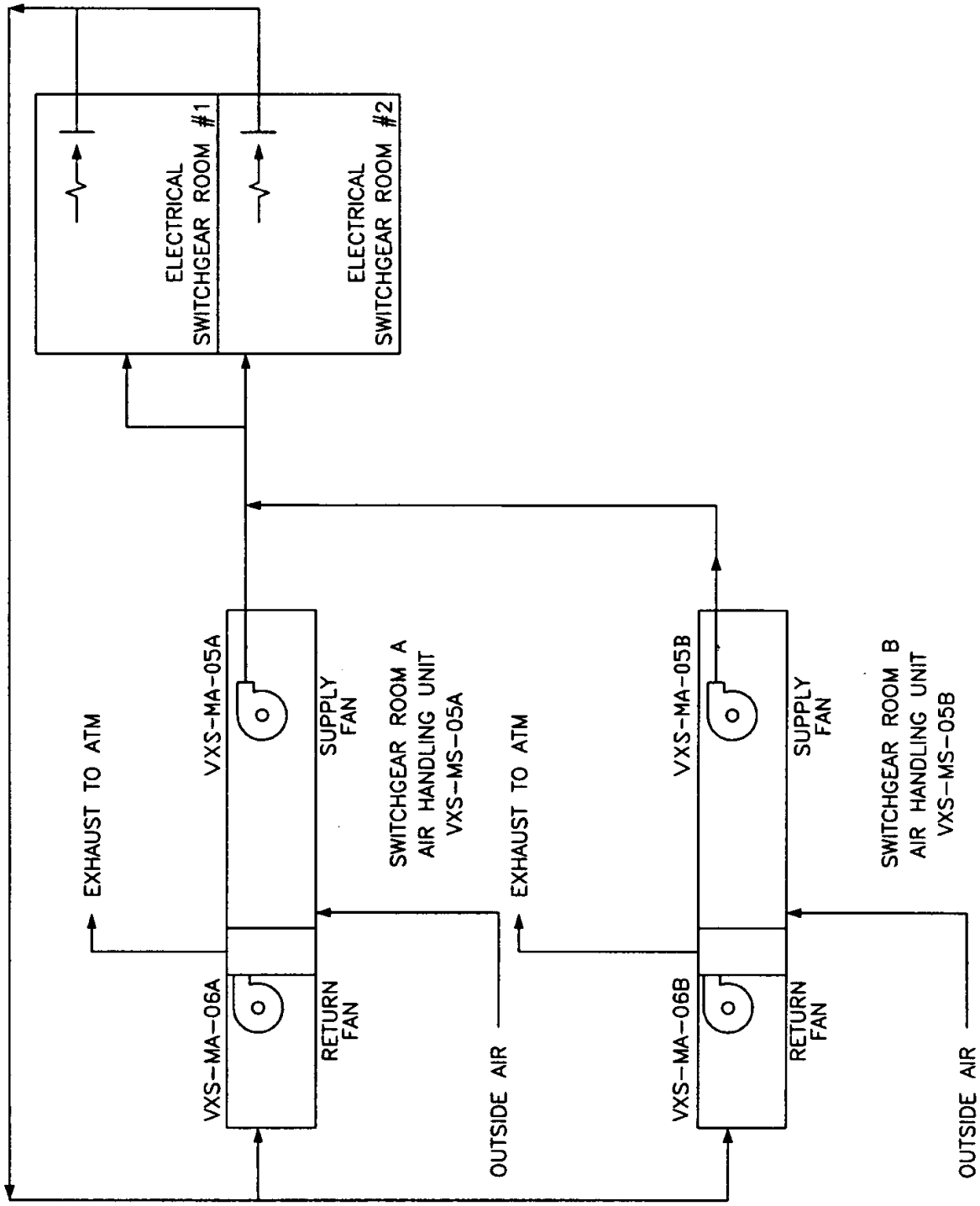

Figure 2.7.3-1 (Sheet 1 of 2)
Annex/Auxiliary Building Nonradioactive Ventilation System

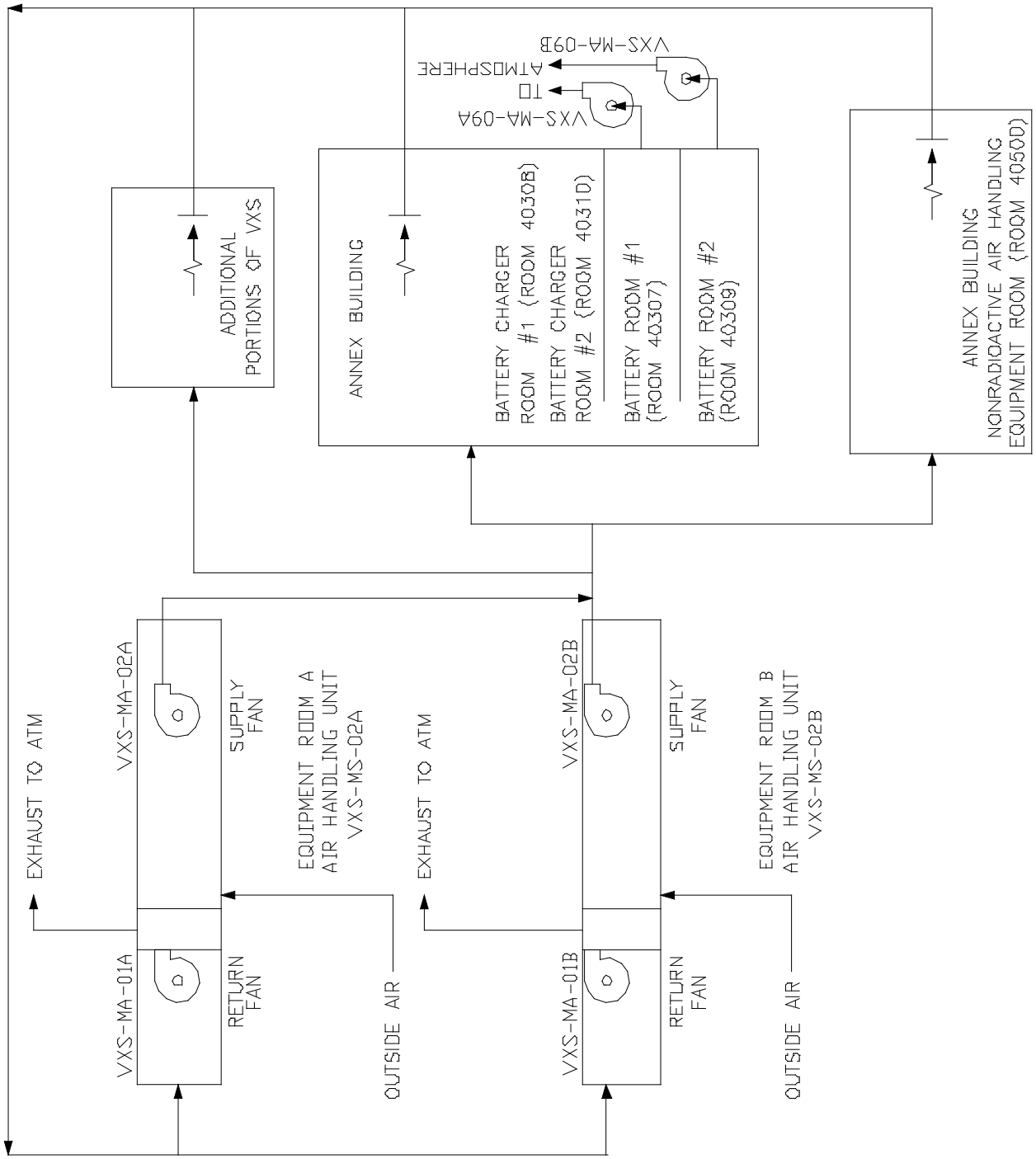

Figure 2.7.3-1 (Sheet 2 of 2)
Annex/Auxiliary Building Nonradioactive Ventilation System

2.7.4 Diesel Generator Building Ventilation System

Design Description

The diesel generator building ventilation system (VZS) provides ventilation cooling of the diesel generator building for the onsite standby power system. The VZS also provides heating and ventilation within the diesel oil transfer module enclosure. The VZS consists of the following subsystems: the normal diesel building heating and ventilation subsystem, the standby diesel building exhaust ventilation subsystem, the fuel oil day tank vault exhaust subsystem and the diesel oil transfer module enclosures ventilation and heating subsystem.

The VZS is as shown in Figure 2.7.4-1 and the component locations of the VZS are as shown in Table 2.7.4-3.

1. The functional arrangement of the VZS is as described in the Design Description of this Section 2.7.4.

2. The VZS provides the following nonsafety-related functions:

   a) The VZS provides ventilation cooling to the diesel generator rooms when the diesel generators are operating.

   b) The VZS provides ventilation cooling to the electrical equipment service modules when the diesel generators are operating.

   c) The VZS provides normal heating and ventilation to the diesel oil transfer module enclosure.

3. Controls exist in the main control room (MCR) to cause the components identified in Table 2.7.4-1 to perform the listed functions.

4. Displays of the parameters identified in Table 2.7.4-1 can be retrieved in the MCR.

Inspections, Tests, Analyses, and Acceptance Criteria

Table 2.7.4-2 specifies the inspections, tests, analyses, and associated acceptance criteria for the VZS.

Table 2.7.4-1			
Equipment Name	**Tag No.**	**Display**	**Control Function**
Diesel Generator Room A Standby Exhaust Fans	VZS-MY-V01A VZS-MY-V02A	Yes (Run Status)	Start
Diesel Generator Room B Standby Exhaust Fans	VZS-MY-V01B VZS-MY-V02B	Yes (Run Status)	Start
Service Module A Air Handling Units (AHU) Supply Fan	VZS-MA-01A	Yes (Run Status)	Start
Service Module B AHU Supply Fan	VZS-MA-01B	Yes (Run Status)	Start
Diesel Oil Transfer Module Enclosure A Exhaust Fan	VZS-MY-V03A	Yes (Run Status)	Start
Diesel Oil Transfer Module Enclosure A Electric Unit Heater	VZS-MY-U03A	Yes (Run Status)	Energize
Diesel Oil Transfer Module Enclosure B Exhaust Fan	VZS-MY-V03B	Yes (Run Status)	Start
Diesel Oil Transfer Module Enclosure B Electric Unit Heater	VZS-MY-U03B	Yes (Run Status)	Energize

Table 2.7.4-2
Inspections, Tests, Analyses, and Acceptance Criteria

Design Commitment	Inspections, Tests, Analyses	Acceptance Criteria
1. The functional arrangement of the VZS is as described in the Design Description of this Section 2.7.4.	Inspection of the as-built system will be performed.	The as-built VZS conforms with the functional arrangement described in the Design Description of this Section 2.7.4.
2.a) The VZS provides ventilation cooling to the diesel generator rooms when the diesel generators are operating.	See item 3 in this table.	See item 3 in this table.
2.b) The VZS provides ventilation cooling to the electrical equipment service modules when the diesel generators are operating.	See item 3 in this table.	See item 3 in this table.
2.c) The VZS provides normal heating and ventilation to the diesel oil transfer module enclosure.	See item 3 in this table.	See item 3 in this table.
3. Controls exist in the MCR to cause the components identified in Table 2.7.4-1 to perform the listed function.	Testing will be performed on the components in Table 2.7.4-1 using controls in the MCR.	Controls in the MCR operate to cause the components listed in Table 2.7.4-1 to perform the listed functions.
4. Displays of the parameters identified in Table 2.7.4-1 can be retrieved in the MCR.	Inspection will be performed for retrievability of the parameters in the MCR.	The displays identified in Table 2.7.4-1 can be retrieved in the MCR.

Table 2.7.4-3		
Component Name	**Tag No.**	**Component Location**
Service Module AHU A	VZS-MS-01A	Diesel-Generator Building
Service Module AHU B	VZS-MS-01B	Diesel-Generator Building
Diesel Oil Transfer Module Enclosure A Unit Heater	VZS-MY-U03A	Yard
Diesel Oil Transfer Module Enclosure B Unit Heater	VZS-MY-U03B	Yard
D/G Building Standby Exhaust Fan 1A	VZS-MY-V01A	Diesel-Generator Building
D/G Building Standby Exhaust Fan 1B	VZS-MY-V01B	Diesel-Generator Building
D/G Building Standby Exhaust Fan 2A	VZS-MY-V02A	Diesel-Generator Building
D/G Building Standby Exhaust Fan 2B	VZS-MY-V02B	Diesel-Generator Building
Diesel Oil Transfer Module Enclosure A Exhaust Fan	VZS-MY-V03A	Yard
Diesel Oil Transfer Module Enclosure B Exhaust Fan	VZS-MY-V03B	Yard
Fuel Oil Day Tank Vault Exhaust Fan	VZS-MA-02A	Diesel-Generator Building
Fuel Oil Day Tank Vault Exhaust Fan	VZS-MA-02B	Diesel-Generator Building

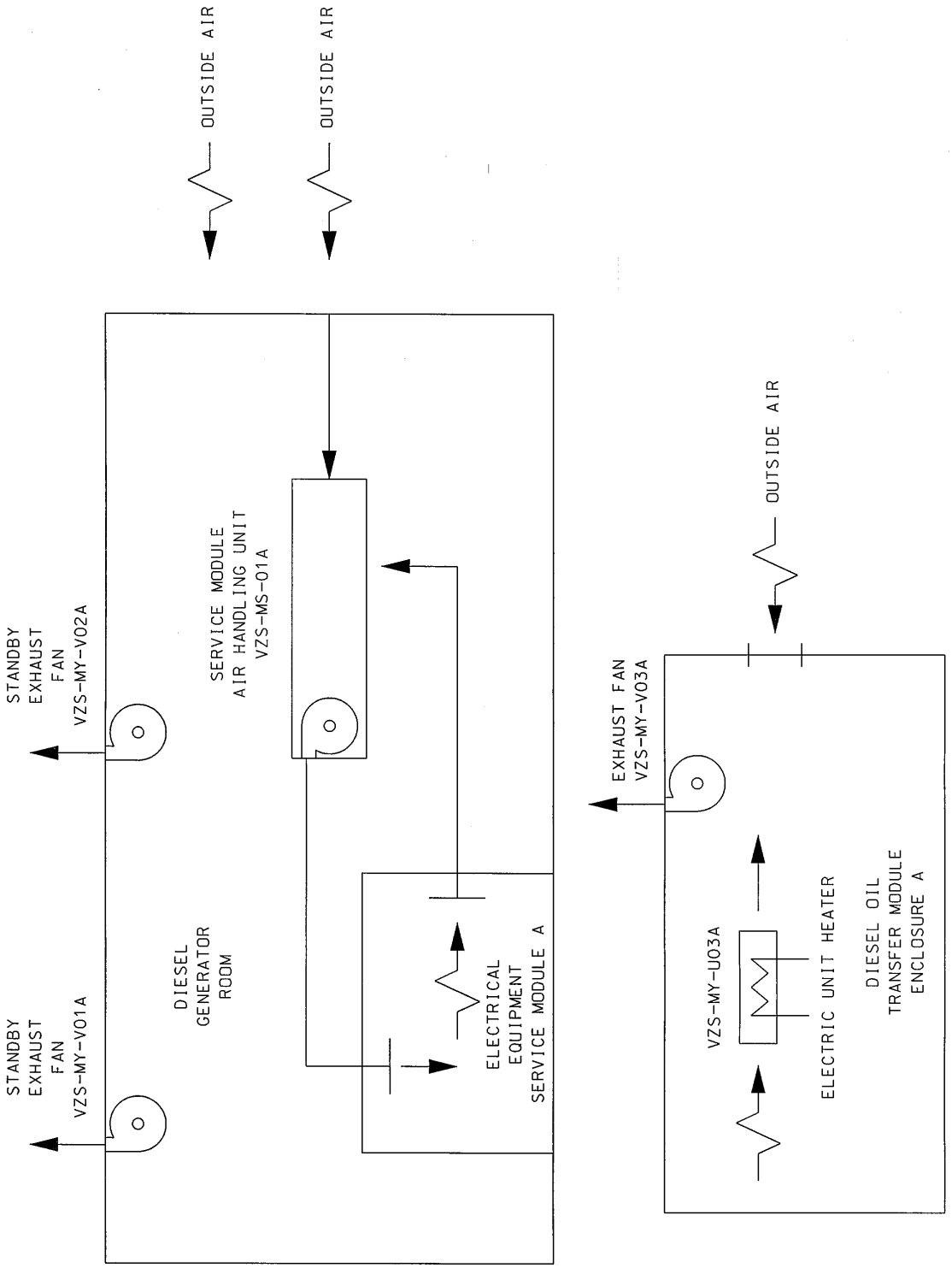

Figure 2.7.4-1 (Sheet 1 of 2)
Diesel Generator Building Ventilation System

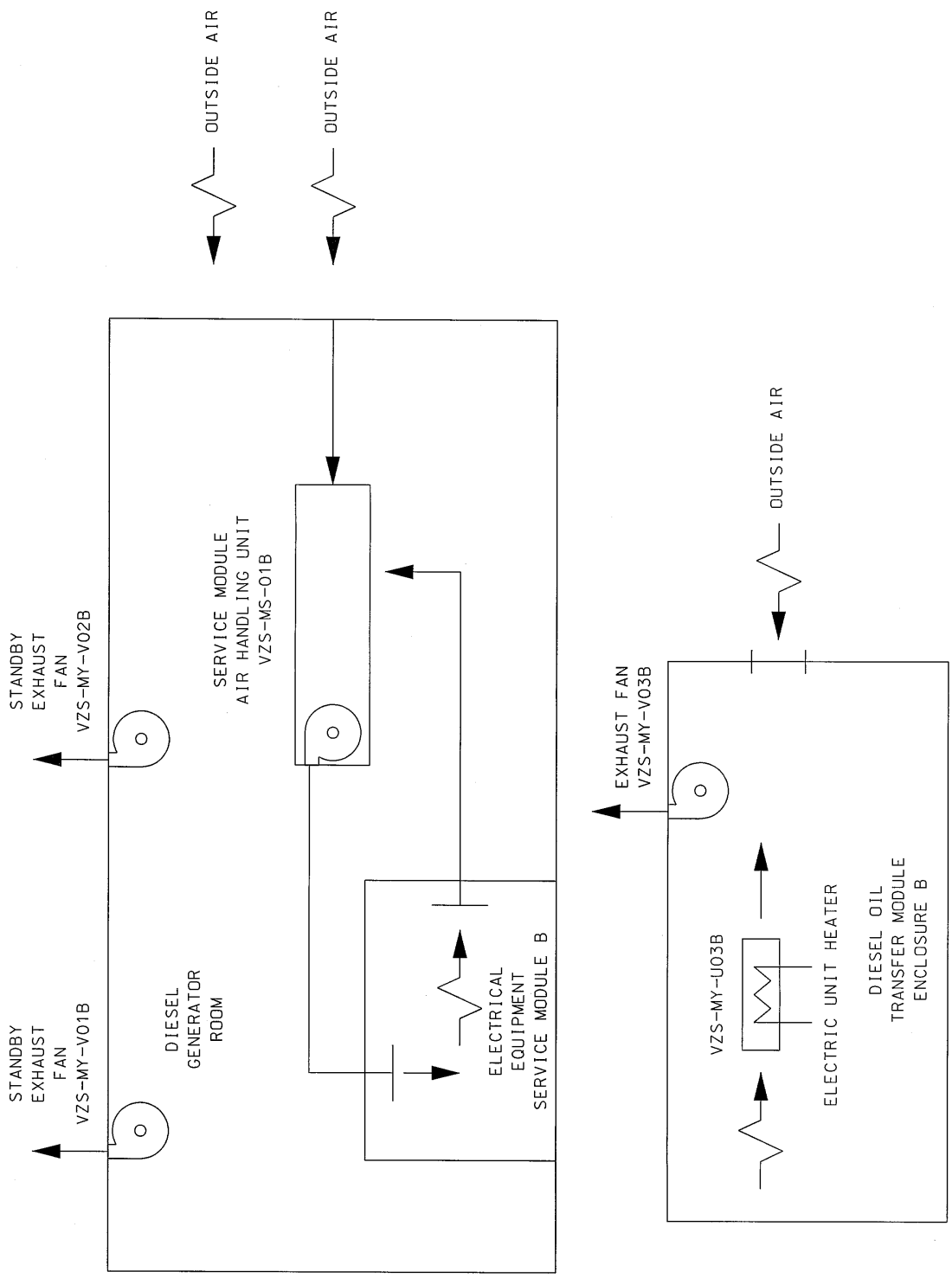

Figure 2.7.4-1 (Sheet 2 of 2)
Diesel Generator Building Ventilation System

2.7.5 Radiologically Controlled Area Ventilation System

Design Description

The radiologically controlled area ventilation system (VAS) serves the fuel handling area of the auxiliary building, and the radiologically controlled portions of the auxiliary and annex buildings, except for the health physics and hot machine shop areas, which are provided with a separate ventilation system (VHS). The VAS consists of two subsystems: the auxiliary/annex building ventilation subsystem and the fuel handling area ventilation subsystem. The subsystems provide ventilation to maintain occupied areas, and access and equipment areas within their design temperature range. They provide outside air for plant personnel and prevent the unmonitored release of airborne radioactivity to the atmosphere or adjacent plant areas. The VAS automatically isolates selected building areas by closing the supply and exhaust duct isolation dampers and starts the containment air filtration system (VFS) when high airborne radioactivity in the exhaust air duct or high ambient pressure differential is detected.

The component locations of the VAS are as shown in Table 2.7.5-3.

1. The functional arrangement of the VAS is as described in the Design Description of this Section 2.7.5.

2. The VAS maintains each building area at a slightly negative pressure relative to the atmosphere or adjacent clean plant areas.

3. Displays of the parameters identified in Table 2.7.5-1 can be retrieved in the main control room (MCR).

Inspections, Tests, Analyses, and Acceptance Criteria

Table 2.7.5-2 specifies the inspections, tests, analyses, and associated acceptance criteria for the VAS.

Table 2.7.5-1

Equipment	Tag No.	Display	Control Function
Annex Building Pressure Differential Indicator	VAS-032	Yes	-
Auxiliary Building Pressure Differential Indicator	VAS-033	Yes	-
Fuel Handling Area Pressure Differential Indicator	VAS-030	Yes	-

Note: Dash (-) indicates not applicable.

Table 2.7.5-2
Inspections, Tests, Analyses, and Acceptance Criteria

Design Commitment	Inspections, Tests, Analyses	Acceptance Criteria
1. The functional arrangement of the VAS is as described in the Design Description of this Section 2.7.5.	Inspection of the as-built system will be performed.	The as-built VAS conforms with the functional arrangement described in the Design Description of this Section 2.7.5.
2. The VAS maintains each building area at a slightly negative pressure relative to the atmosphere or adjacent clean plant areas.	i) Testing will be performed to confirm that the VAS maintains each building at a slightly negative pressure when operating all VAS supply AHUs and all VAS exhaust fans.	i) The time average pressure differential in the served areas of the annex, fuel handling and radiologically controlled auxiliary buildings as measured by each of the instruments identified in Table 2.7.5-1 is negative.
	ii) Testing will be performed to confirm the ventilation flow rate through the auxiliary building fuel handling area when operating all VAS supply AHUs and all VAS exhaust fans.	ii) A report exists and concludes that the calculated exhaust flow rate based on the measured flow rates is greater than or equal to 15,300 cfm.
	iii) Testing will be performed to confirm the auxiliary building radiologically controlled area ventilation flow rate when operating all VAS supply AHUs and all VAS exhaust fans.	iii) A report exists and concludes that the calculated exhaust flow rate based on the measured flow rates is greater than or equal to 22,500 cfm.
3. Displays of the parameters identified in Table 2.7.5-1 can be retrieved in the MCR.	Inspection will be performed for retrievability of the parameters in the MCR.	The displays identified in Table 2.7.5-1 can be retrieved in the MCR.

Table 2.7.5-3		
Component Name	**Tag No.**	**Component Location**
Auxiliary/Annex Building Supply AHU A	VAS-MS-01A	Annex Building
Auxiliary/Annex Building Supply AHU B	VAS-MS-01B	Annex Building
Fuel Handling Area Supply AHU A	VAS-MS-02A	Annex Building
Fuel Handling Area Supply AHU B	VAS-MS-02B	Annex Building
CVS Pump Room Unit Cooler A	VAS-MS-05A	Auxiliary Building
CVS Pump Room Unit Cooler B	VAS-MS-05B	Auxiliary Building
RNS Pump Room Unit Cooler A	VAS-MS-06A	Auxiliary Building
RNS Pump Room Unit Cooler B	VAS-MS-06B	Auxiliary Building
Auxiliary/Annex Building Exhaust Fan A	VAS-MA-02A	Auxiliary Building
Auxiliary/Annex Building Exhaust Fan B	VAS-MA-02B	Auxiliary Building
Fuel Handling Area Exhaust Fan A	VAS-MA-06A	Auxiliary Building
Fuel Handling Area Exhaust Fan B	VAS-MA-06B	Auxiliary Building

2.7.6 Containment Air Filtration System

Design Description

The containment air filtration system (VFS) provides intermittent flow of outdoor air to purge and filter the containment atmosphere of airborne radioactivity during normal plant operation, and continuous flow during hot or cold plant shutdown conditions to reduce airborne radioactivity levels for personnel access. The VFS can also provide filtered exhaust for the radiologically controlled area ventilation system (VAS) during abnormal conditions.

The VFS is as shown in Figure 2.7.6-1 and the component locations of the VFS are as shown in Table 2.7.6-3.

1. The functional arrangement of the VFS is as described in the Design Description of this Section 2.7.6.

2. The VFS provides the safety-related functions of preserving containment integrity by isolation of the VFS lines penetrating containment and providing vacuum relief for the containment vessel.

3. The VFS provides the intermittent flow of outdoor air to purge the containment atmosphere during normal plant operation, and continuous flow during hot or cold plant shutdown conditions.

4. Controls exist in the main control room (MCR) to cause the components identified in Table 2.7.6-1 to perform the listed function.

5. Displays of the parameters in Table 2.7.6-1 can be retrieved in the MCR.

Inspections, Tests, Analyses, and Acceptance Criteria

Table 2.7.6-2 specifies the inspections, tests, analyses, and associated criteria for the VFS.

Table 2.7.6-1			
Equipment	**Tag No.**	**Display**	**Control Function**
Containment Air Handling Units (AHU) Supply Fan A	VFS-MA-01A	Yes (Run Status)	Start
Containment AHU Supply Fan B	VFS-MA-01B	Yes (Run Status)	Start
Containment AHU Supply Fan A Flow Sensor	VFS-012A	Yes	-
Containment AHU Supply Fan B Flow Sensor	VFS-012B	Yes	-
Containment Exhaust Fan A	VFS-MA-02A	Yes (Run Status)	Start
Containment Exhaust Fan B	VFS-MA-02B	Yes (Run Status)	Start
Containment Exhaust Fan A Flow Sensor	VFS-011A	Yes	-
Containment Exhaust Fan B Flow Sensor	VFS-011B	Yes	-

Table 2.7.6-2		
Design Commitment	**Inspections, Tests, Analyses**	**Acceptance Criteria**
1. The functional arrangement of the VFS is as described in the Design Description of this Section 2.7.6.	Inspection of the as-built system will be performed.	The as-built VFS conforms with the functional arrangement described in the Design Description of this Section 2.7.6.
2. The VFS provides the safety-related functions of preserving containment integrity by isolation of the VFS lines penetrating containment and providing vacuum relief for the containment vessel.	i) See Tier 1 Material, Table 2.2.1-3, items 1 and 7. ii) Testing will be performed to demonstrate that remotely operated containment vacuum relief isolation valves open within the required response time.	i) See Tier 1 Material, Table 2.2.1-3, items 1 and 7. ii) The containment vacuum relief isolation valves (VFS-PL-V800A and VFS-PL-V800B) open within 30 seconds.
3. The VFS provides the intermittent flow of outdoor air to purge the containment atmosphere during normal plant operation, and continuous flow during hot or cold plant shutdown conditions.	i) Testing will be performed to confirm that containment supply AHU fan A when operated with containment exhaust fan A provides a flow of outdoor air. ii) Testing will be performed to confirm that containment supply AHU fan B when operated with containment exhaust fan B provides a flow of outdoor air. iii) Inspection will be conducted of the containment purge discharge line (VFS-L204) penetrating the containment.	i) The flow rate measured at each fan is greater than or equal to 3,600 scfm. ii) The flow rate measured at each fan is greater than or equal to 3,600 scfm. iii) The nominal line size is ≥ 36 in.
4. Controls exist in the MCR to cause the components identified in Table 2.7.6-1 to perform the listed function.	Testing will be performed on the components in Table 2.7.6-1 using controls in the MCR.	Controls in the MCR operate to cause the components listed in Table 2.7.6-1 to perform the listed functions.
5. Displays of the parameters identified in Table 2.7.6-1 can be retrieved in the MCR.	Inspection will be performed for retrievability of the parameters in the MCR.	The displays identified in Table 2.7.6-1 can be retrieved in the MCR.

Table 2.7.6-3		
Component Name	**Tag No.**	**Component Location**
Containment Air Filtration Supply AHU A	VFS-MS-01A	Annex Building
Containment Air Filtration Supply AHU B	VFS-MS-01B	Annex Building
Containment Air Filtration Exhaust Unit A	VFS-MS-02A	Annex Building
Containment Air Filtration Exhaust Unit B	VFS-MS-02B	Annex Building

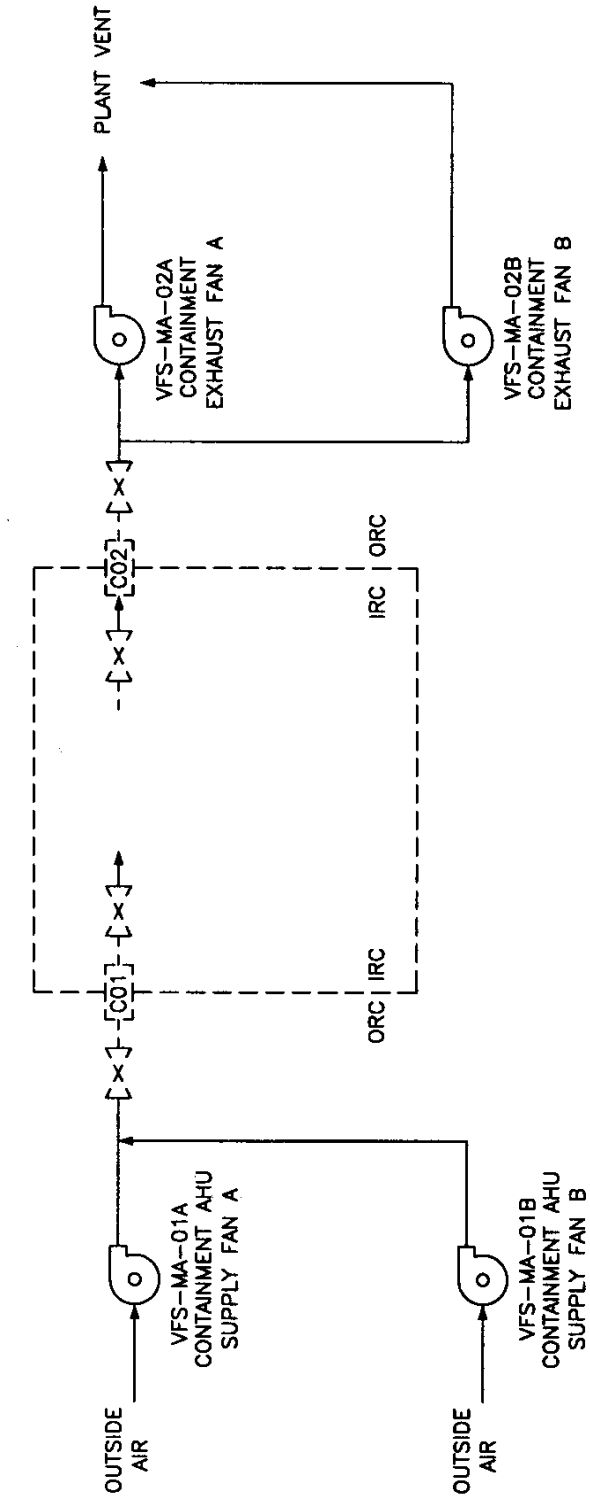

Figure 2.7.6-1
Containment Air Filtration System

2.7.7 Containment Recirculation Cooling System

Design Description

The containment recirculation cooling system (VCS) controls the containment air temperature and humidity during normal operation, refueling and shutdown.

The locations of the VCS are as shown in Table 2.7.7-3.

1. The functional arrangement of the VCS is as described in the Design Description of this Section 2.7.7.

2. Displays of the parameters identified in Table 2.7.7-1 can be retrieved in the main control room (MCR).

Inspections, Tests, Analyses, and Acceptance Criteria

Table 2.7.7-2 specifies the inspections, tests, analyses, and associated acceptance criteria for the VCS.

Table 2.7.7-1

Equipment Name	Tag No.	Display
Containment Temperature Channel	VCS-061	Yes
Containment Fan Cooler Fan	VCS-MA-01A VCS-MA-01C VCS-MA-01B VCS-MA-01D	Yes (Run Status) Yes (Run Status) Yes (Run Status) Yes (Run Status)

Note: Dash (-) indicates not applicable.

Table 2.7.7-2
Inspections, Tests, Analyses, and Acceptance Criteria

Design Commitment	Inspections, Tests, Analyses	Acceptance Criteria
1. The functional arrangement of the VCS is as described in the Design Description of this Section 2.7.7.	Inspection of the as-built system will be performed.	The as-built VCS conforms with the functional arrangement described in the Design Description of this Section 2.7.7.
2. Displays of the parameters identified in Table 2.7.7-1 can be retrieved in the MCR.	Inspection will be performed for retrievability of the parameters in the MCR.	The displays identified in Table 2.7.7-1 are retrieved in the MCR.

Table 2.7.7-3

Component Name	Tag No.	Component Location
Reactor Containment Recirculation Fan Coil Unit Assembly A	VCS-MS-01A	Containment
Reactor Containment Recirculation Fan Coil Unit Assembly B	VCS-MS-01B	Containment

2.7.8 Radwaste Building HVAC System

The radwaste building HVAC system (VRS) serves the radwaste building and provides radiation monitoring of exhaust prior to release to the environment.

2.7.9 Turbine Island Building Ventilation System

No entry for this system.

2.7.10 Health Physics and Hot Machine Shop HVAC System

The health physics and hot machine shop system (VHS) serves the health physics and hot machine shop area of the annex building and provides radiation monitoring of exhaust prior to release to the environment.

2.7.11 Hot Water Heating System

No entry for this system.