2.6 Electrical Power Systems

2.6.1 Main ac Power System

Design Description

The main ac power system (ECS) provides electrical ac power to nonsafety-related loads and non-Class 1E power to the Class 1E battery chargers and regulating transformers during normal and off-normal conditions.

The ECS is as shown in Figures 2.6.1-1 and the component locations of the ECS are as shown in Table 2.6.1-5.

1. The functional arrangement of the ECS is as described in the Design Description of this Section 2.6.1.

2. The seismic Category I equipment identified in Table 2.6.1-1 can withstand seismic design basis loads without loss of safety function.

3. a) The Class 1E breaker control power for the equipment identified in Table 2.6.1-1 are powered from their respective Class 1E division.

   b) Separation is provided between ECS Class 1E divisions, and between Class 1E divisions and non-Class 1E cable.

4. The ECS provides the following nonsafety-related functions:

   a) The ECS provides the capability for distributing non-Class 1E ac power from onsite sources (ZOS) to nonsafety-related loads listed in Table 2.6.1-2.

   b) The 6900 Vac circuit breakers in switchgear ECS-ES-1 and ECS-ES-2 open after receiving a signal from the onsite standby power system.

   c) Each standby diesel generator 6900 Vac circuit breaker closes after receiving a signal from the onsite standby power system.

   d) Each ancillary diesel generator unit is sized to supply power to long-term safety-related post-accident monitoring loads and control room lighting and ventilation through a regulating transformer; and for one passive containment cooling system (PCS) recirculation pump.

   e) The ECS provides two loss-of-voltage signals to the onsite standby power system (ZOS), one for each diesel-backed 6900 Vac switchgear bus.

   f) The ECS provides a reverse-power trip of the generator circuit breaker which is blocked for at least 15 seconds following a turbine trip.

5. Controls exist in the main control room (MCR) to cause the circuit breakers identified in Table 2.6.1-3 to perform the listed functions.

6. Displays of the parameters identified in Table 2.6.1-3 can be retrieved in the MCR.

Inspections, Tests, Analyses, and Acceptance Criteria

Table 2.6.1-4 specifies the inspections, tests, analyses, and associated acceptance criteria for the ECS.

Table 2.6.1-1

Equipment Name	Tag No.	Seismic Category I	Class 1E/ Qual. for Harsh Envir.	Safety-Related Display
Reactor Coolant Pump (RCP) Circuit Breaker	ECS-ES-31	Yes	Yes/No (Trip open only)	No
RCP Circuit Breaker	ECS-ES-32	Yes	Yes/No (Trip open only)	No
RCP Circuit Breaker	ECS-ES-41	Yes	Yes/No (Trip open only)	No
RCP Circuit Breaker	ECS-ES-42	Yes	Yes/No (Trip open only)	No
RCP Circuit Breaker	ECS-ES-51	Yes	Yes/No (Trip open only)	No
RCP Circuit Breaker	ECS-ES-52	Yes	Yes/No (Trip open only)	No
RCP Circuit Breaker	ECS-ES-61	Yes	Yes/No (Trip open only)	No
RCP Circuit Breaker	ECS-ES-62	Yes	Yes/No (Trip open only)	No

Table 2.6.1-2	
Load Description	**Power Source**
Load Center Transformers EK-11, EK-12, EK-13, EK-14	ZOS-MG-02A
Diesel Oil Transfer Module Enclosure A Electric Unit Heater	ZOS-MG-02A
Diesel Oil Transfer Module Enclosure A Fan	ZOS-MG-02A
Class 1E Division A Regulating Transformer	ZOS-MG-02A
Class 1E Division C Regulating Transformer	ZOS-MG-02A
Diesel Generator Fuel Oil Transfer Pump 1A	ZOS-MG-02A
Diesel Generator Room A Building Standby Exhaust Fans 1A and 2A	ZOS-MG-02A
Diesel Generator Service Module A Air Handling Unit (AHU) 01A Fan	ZOS-MG-02A
Startup Feedwater Pump A	ZOS-MG-02A
Service Water Pump A	ZOS-MG-02A
Service Water Cooling Tower Fan A	ZOS-MG-02A
MCR/Control Support Area (CSA) AHU A Supply and Return Fans	ZOS-MG-02A
Divisions A/C Class 1E Electrical Room AHU A Supply and Return Fans	ZOS-MG-02A
Divisions B/D Class 1E Electrical Room AHU D Supply and Return Fans	ZOS-MG-02A
Air-cooled Chiller Pump 2	ZOS-MG-02A
Component Cooling Water Pump 1A	ZOS-MG-02A
Air-cooled Chiller 2	ZOS-MG-02A
Chemical and Volume Control System (CVS) Makeup Pump 1A	ZOS-MG-02A
CVS Pump Room Unit Cooler Fan A	ZOS-MG-02A
Normal Residual Heat Removal System (RNS) Pump 1A	ZOS-MG-02A
RNS Pump Room Unit Cooler Fan A	ZOS-MG-02A
Equipment Room AHU Supply and Return Fans VXS-MA-01A/02A	ZOS-MG-02A
Switchgear Room A AHU Supply and Return Fans VXS-MA-05A/06A	ZOS-MG-02A
Non-1E Battery Charger EDS1-DC-1	ZOS-MG-02A
Non-1E Battery Room A Exhaust Fan	ZOS-MG-02A
Non-1E Battery Charger EDS3-DC-1	ZOS-MG-02A

Table 2.6.1-2 (cont.)	
Load Description	**Power Source**
Class 1E Division A Battery Charger 1 (24-hour)	ZOS-MG-02A
Class 1E Division C Battery Charger 1 (24-hour)	ZOS-MG-02A
Class 1E Division C Battery Charger 2 (72-hour)	ZOS-MG-02A
Divisions A/C Class 1E Battery Room Exhaust Fan A	ZOS-MG-02A
Supplemental Air Filtration Unit Fan A	ZOS-MG-02A
Backup Group 4A Pressurizer Heaters	ZOS-MG-02A
Spent Fuel Cooling Pump 1A	ZOS-MG-02A
Load Center Transformers EK-21, EK-22, EK-23, EK-24	ZOS-MG-02B
Diesel Oil Transfer Module Enclosure B Electric Unit Heater	ZOS-MG-02B
Diesel Oil Transfer Module Enclosure B Fan	ZOS-MG-02B
Class 1E Division B Regulating Transformer	ZOS-MG-02B
Class 1E Division D Regulating Transformer	ZOS-MG-02B
Diesel Generator Fuel Oil Transfer Pump 1B	ZOS-MG-02B
Diesel Generator Room B Building Standby Exhaust Fans 1B and 2B	ZOS-MG-02B
Diesel Generator Service Module B AHU 01B Fan	ZOS-MG-02B
Startup Feedwater Pump B	ZOS-MG-02B
Service Water Pump B	ZOS-MG-02B
Service Water Cooling Tower Fan B	ZOS-MG-02B
MCR/CSA AHU B Supply and Return Fans	ZOS-MG-02B
Divisions B/D Class 1E Electrical Room AHU B Supply and Return Fans	ZOS-MG-02B
Divisions A/C Class 1E Electrical Room AHU C Supply and Return Fans	ZOS-MG-02B
Air-cooled Chiller Pump 3	ZOS-MG-02B
Component Cooling Water Pump 1B	ZOS-MG-02B
Air-cooled Chiller 3	ZOS-MG-02B
CVS Makeup Pump 1B	ZOS-MG-02B
CVS Pump Room Unit Cooler Fan B	ZOS-MG-02B
RNS Pump 1B	ZOS-MG-02B

Table 2.6.1-2 (cont.)	
Load Description	**Power Source**
RNS Pump Room Unit Cooler Fan B	ZOS-MG-02B
Equipment Room B AHU Supply and Return Fans VXS-MA-01B/02B	ZOS-MG-02B
Switchgear Room B AHU Supply and Return Fans VXS-MA-05B/06B	ZOS-MG-02B
Non-1E Battery Charger EDS2-DC-1	ZOS-MG-02B
Non-1E Battery Charger EDS4-DC-1	ZOS-MG-02B
Non-1E Battery Room B Exhaust Fan	ZOS-MG-02B
Class 1E Division B Battery Charger 1 (24-hour)	ZOS-MG-02B
Class 1E Division B Battery Charger 2 (72-hour)	ZOS-MG-02B
Class 1E Division D Battery Charger 1 (24-hour)	ZOS-MG-02B
Divisions B/D Class 1E Battery Room Exhaust Fan B	ZOS-MG-02B
Supplemental Air Filtration Unit Fan B	ZOS-MG-02B
Backup Group 4B Pressurizer Heaters	ZOS-MG-02B
Spent Fuel Cooling Pump 1B	ZOS-MG-02B

Table 2.6.1-3

Equipment	Tag No.	Display	Control Function
6900 V Switchgear Bus 1	ECS-ES-1	Yes (Bus voltage, breaker position for all breakers on bus)	Yes (Breaker open/close)
6900 V Switchgear Bus 2	ECS-ES-2	Yes (Bus voltage, breaker position for all breakers on bus)	Yes (Breaker open/close)
Unit Auxiliary Transformer A	ZAS-ET-2A	Yes (Secondary Voltage)	No
Unit Auxiliary Transformer B	ZAS-ET-2B	Yes (Secondary Voltage)	No
Reserve Auxiliary Transformer A	ZAS-ET-4A	Yes (Secondary Voltage)	No
Reserve Auxiliary Transformer B	ZAS-ET-4B	Yes (Secondary Voltage)	No

Table 2.6.1-4
Inspections, Tests, Analyses, and Acceptance Criteria

Design Commitment	Inspections, Tests, Analyses	Acceptance Criteria
1. The functional arrangement of the ECS is as described in the Design Description of this Section 2.6.1.	Inspection of the as-built system will be performed.	The as-built ECS conforms with the functional arrangement as described in the Design Description of this Section 2.6.1.
2. The seismic Category I equipment identified in Table 2.6.1-1 can withstand seismic design basis loads without loss of safety function.	i) Inspection will be performed to verify that the seismic Category I equipment identified in Table 2.6.1-1 is located on the Nuclear Island. ii) Type tests, analyses, or a combination of type tests and analyses of seismic Category I equipment will be performed. iii) Inspection will be performed for the existence of a report verifying that the as-built equipment including anchorage is seismically bounded by the tested or analyzed conditions.	i) The seismic Category I equipment identified in Table 2.6.1-1 is located on the Nuclear Island. ii) A report exists and concludes that the seismic Category I equipment can withstand seismic design basis loads without loss of safety function. iii) A report exists and concludes that the as-built equipment including anchorage is seismically bounded by the tested or analyzed conditions.
3.a) The Class 1E breaker control power for the equipment identified in Table 2.6.1-1 are powered from their respective Class 1E division.	Testing will be performed on the ECS by providing a simulated test signal in each Class 1E division.	A simulated test signal exists at the Class 1E equipment identified in Table 2.6.1-1 when the assigned Class 1E division is provided the test signal.
3.b) Separation is provided between ECS Class 1E divisions, and between Class 1E divisions and non-Class 1E cable.	See Tier 1 Material, Table 3.3-6, item 7.d.	See Tier 1 Material, Table 3.3-6, item 7.d.
4.a) The ECS provides the capability for distributing non-Class 1E ac power from onsite sources (ZOS) to nonsafety-related loads listed in Table 2.6.1-2.	Tests will be performed using a test signal to confirm that an electrical path exists for each selected load listed in Table 2.6.1-2 from an ECS-ES-1 or ECS-ES-2 bus. Each test may be a single test or a series of over-lapping tests.	A test signal exists at the terminals of each selected load.

Table 2.6.1-4 (cont.)
Inspections, Tests, Analyses, and Acceptance Criteria

Design Commitment	Inspections, Tests, Analyses	Acceptance Criteria
4.b) The 6900 Vac circuit breakers in switchgear ECS-ES-1 and ECS-ES-2 open after receiving a signal from the onsite standby power load system.	See Tier 1 Material, Table 2.6.4-1, item 2.a.	See Tier 1 Material, Table 2.6.4-1, item 2.a.
4.c) Each standby diesel generator 6900 Vac circuit breaker closes after receiving a signal from the onsite standby power system.	Testing will be performed using real or simulated signals from the standby diesel load system.	Each standby diesel generator 6900 Vac circuit breaker closes after receiving a signal from the standby diesel system.
4.d) Each ancillary diesel generator unit is sized to supply power to long-term safety-related post-accident monitoring loads and control room lighting and ventilation through a regulating transformer; and for one PCS recirculation pump.	Each ancillary diesel generator will be operated with fuel supplied from the ancillary diesel generator fuel tank and with a load of 35 kW or greater and a power factor between 0.9 and 1.0 for a time period required to reach engine temperature equilibrium plus 2.5 hours.	Each diesel generator provides power to the load with a generator terminal voltage of 480 ± 10% volts and a frequency of 60 ± 5% Hz.
4.e) The ECS provides two loss-of-voltage signals to the onsite standby power system (ZOS), one for each diesel-backed 6900 Vac switchgear bus.	Tests on the as-built ECS system will be conducted by simulating a loss-of-voltage condition on each diesel-backed 6900 Vac switchgear bus.	A loss-of-voltage signal is generated when the loss-of-voltage condition is simulated.
4.f) The ECS provides a reverse-power trip of the generator circuit breaker which is blocked for at least 15 seconds following a turbine trip.	Tests on the as-built ECS system will be conducted by simulating a turbine trip signal followed by a simulated reverse-power condition. The generator circuit breaker trip signal will be monitored.	The generator circuit breaker trip signal does not occur until at least 15 seconds after the simulated turbine trip.
5. Controls exist in the MCR to cause the circuit breakers identified in Table 2.6.1-3 to perform the listed functions.	Tests will be performed to verify that controls in the MCR can operate the circuit breakers identified in Table 2.6.1-3.	Controls in the MCR cause the circuit breakers identified in Table 2.6.1-3 to operate.
6. Displays of the parameters identified in Table 2.6.1-3 can be retrieved in the MCR.	Inspection will be performed for retrievability of the displays identified in Table 2.6.1-3 in the MCR.	Displays identified in Table 2.6.1-3 can be retrieved in the MCR.

Table 2.6.1-5		
Component Name	**Tag No.**	**Component Location**
RCP Circuit Breaker	ECS-ES-31	Auxiliary Building
RCP Circuit Breaker	ECS-ES-32	Auxiliary Building
RCP Circuit Breaker	ECS-ES-41	Auxiliary Building
RCP Circuit Breaker	ECS-ES-42	Auxiliary Building
RCP Circuit Breaker	ECS-ES-51	Auxiliary Building
RCP Circuit Breaker	ECS-ES-52	Auxiliary Building
RCP Circuit Breaker	ECS-ES-61	Auxiliary Building
RCP Circuit Breaker	ECS-ES-62	Auxiliary Building
6900 V Switchgear Bus 1	ECS-ES-1	Annex Building
6900 V Switchgear Bus 2	ECS-ES-2	Annex Building
6900 V Switchgear Bus 3	ECS-ES-3	Turbine Building
6900 V Switchgear Bus 4	ECS-ES-4	Turbine Building
6900 V Switchgear Bus 5	ECS-ES-5	Turbine Building
6900 V Switchgear Bus 6	ECS-ES-6	Turbine Building
Main Generator	ZAS-MG-01	Turbine Building
Generator Circuit Breaker	ZAS-ES-01	Turbine Building
Main Step-up Transformer	ZAS-ET-1A	Yard
Main Step-up Transformer	ZAS-ET-1B	Yard
Main Step-up Transformer	ZAS-ET-1C	Yard
Unit Auxiliary Transformer A	ZAS-ET-2A	Yard
Unit Auxiliary Transformer B	ZAS-ET-2B	Yard
Reserve Auxiliary Transformer A	ZAS-ET-4A	Yard
Reserve Auxiliary Transformer B	ZAS-ET-4B	Yard
Ancillary Diesel Generator #1	ECS-MG-01	Annex Building
Ancillary Diesel Generator #2	ECS-MG-02	Annex Building
Ancillary Diesel Generator Distribution Panel 1	ECS-ED-01	Annex Building
Ancillary Diesel Generator Distribution Panel 1	ECS-ED-02	Annex Building

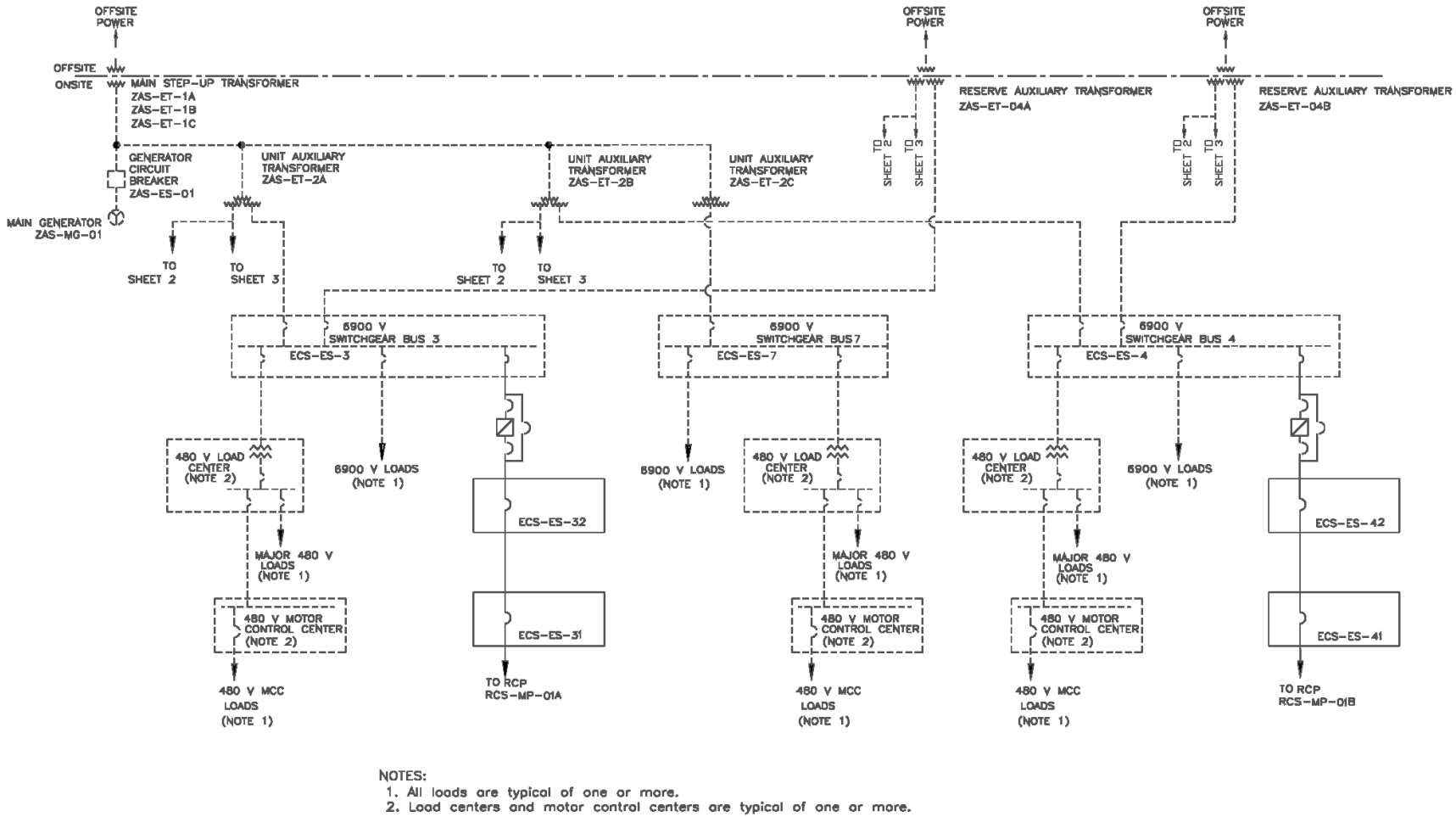

Figure 2.6.1-1 (Sheet 1 of 4)
Main ac Power System

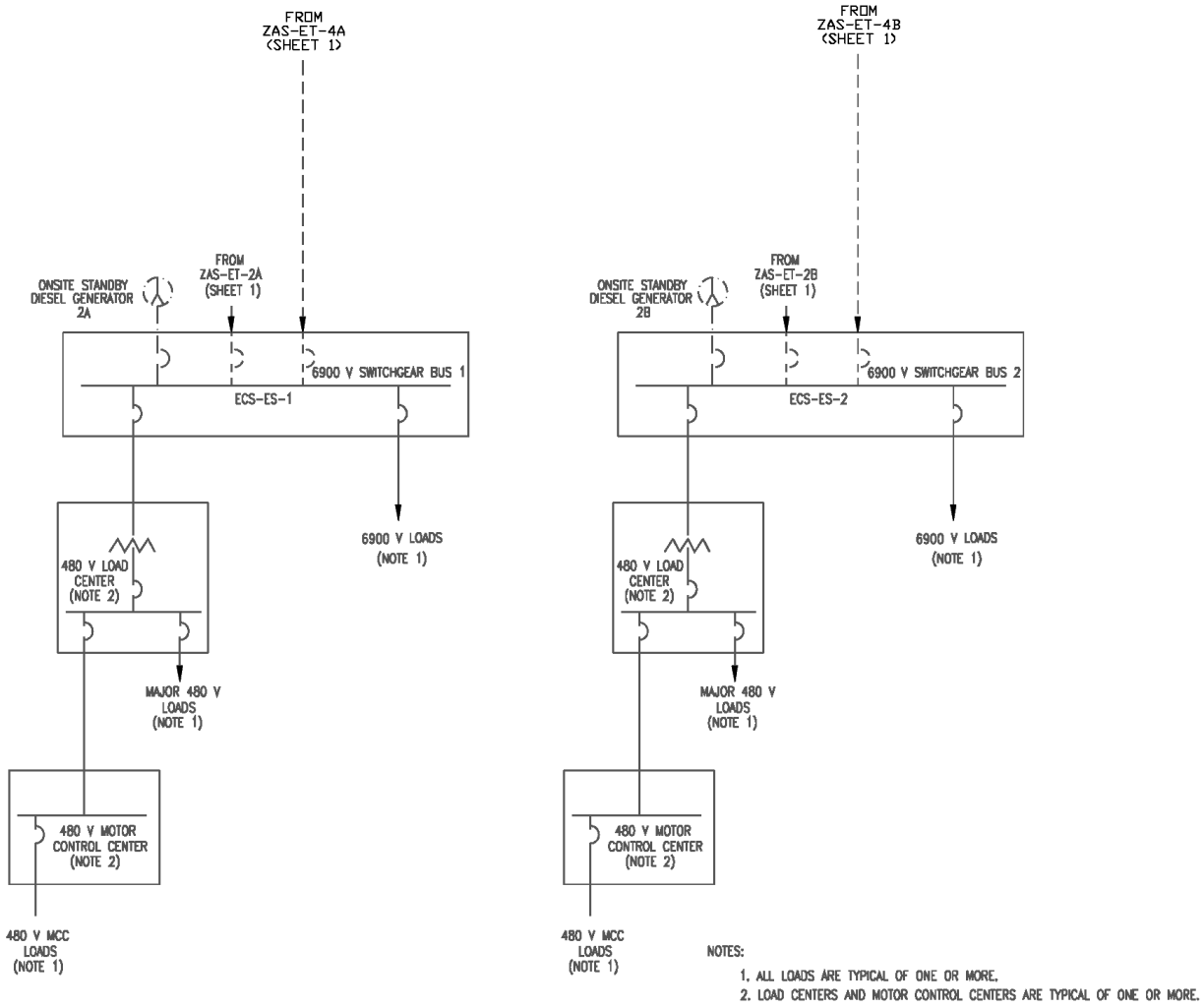

Figure 2.6.1-1 (Sheet 2 of 4)
Main ac Power System

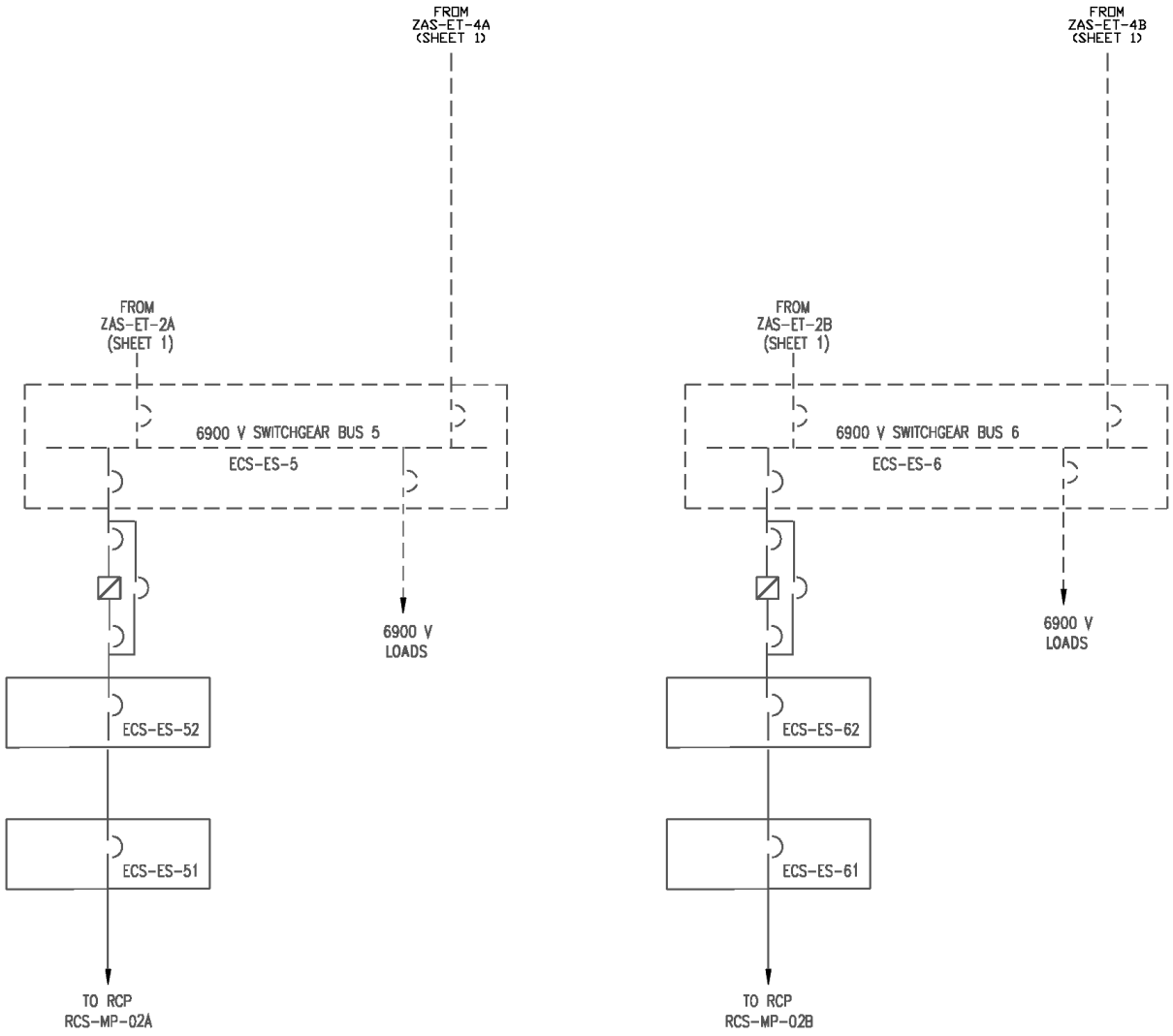

Figure 2.6.1-1 (Sheet 3 of 4)
Main ac Power System

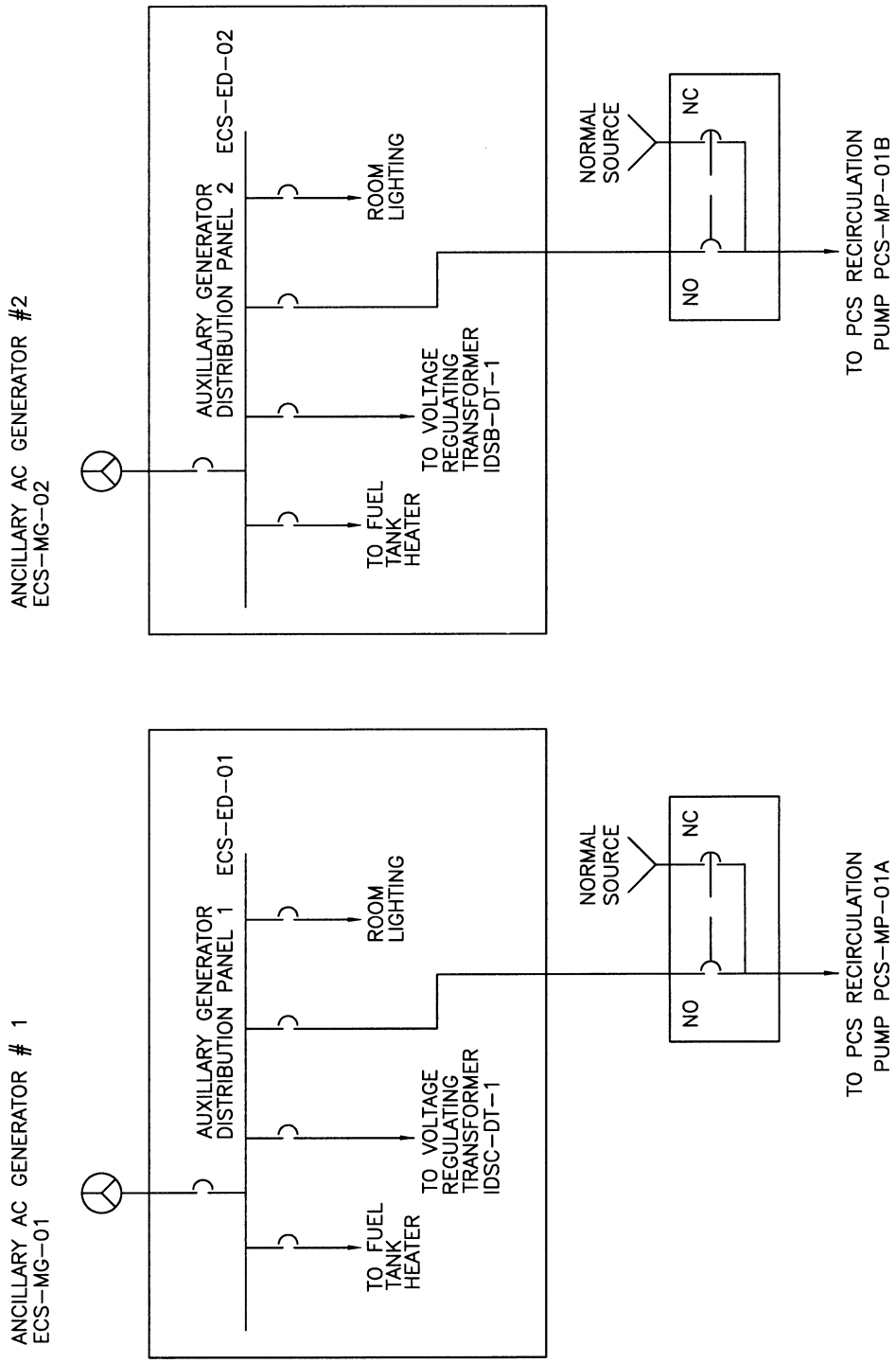

Figure 2.6.1-1 (Sheet 4 of 4)
Main ac Power System

2.6.2 Non-Class 1E dc and Uninterruptible Power Supply System

Design Description

The non-Class 1E dc and uninterruptible power supply system (EDS) provides dc and uninterruptible ac electrical power to nonsafety-related loads during normal and off-normal conditions.

The EDS is as shown in Figure 2.6.2-1 and the component locations of the EDS are as shown in Table 2.6.2-2.

1. The functional arrangement of the EDS is as described in the Design Description of this Section 2.6.2.

2. The EDS provides the following nonsafety-related functions:

   a) Each EDS load group 1, 2, 3, and 4 battery charger supplies the corresponding dc switchboard bus load while maintaining the corresponding battery charged.

   b) Each EDS load group 1, 2, 3, and 4 battery supplies the corresponding dc switchboard bus load for a period of 2 hours without recharging.

   c) Each EDS load group 1, 2, 3, and 4 inverter supplies the corresponding ac load.

Inspections, Tests, Analyses, and Acceptance Criteria

Table 2.6.2-1 specifies the inspections, tests, analyses, and associated acceptance criteria for the EDS.

Table 2.6.2-1
Inspections, Tests, Analyses, and Acceptance Criteria

Design Commitment	Inspections, Tests, Analyses	Acceptance Criteria
1. The functional arrangement of the EDS is as described in the Design Description of this Section 2.6.2.	Inspection of the as-built system will be performed.	The as-built EDS conforms with the functional arrangement as described in the Design Description of this Section 2.6.2.
2.a) Each EDS load group 1, 2, 3, and 4 battery charger supplies the corresponding dc switchboard bus load while maintaining the corresponding battery charged.	Testing of each as-built battery charger will be performed by applying a simulated or real load, or a combination of simulated or real loads.	Each battery charger provides an output current of at least 550 amps with an output voltage in the range 105 to 140 V.
2.b) Each EDS load group 1, 2, 3, and 4 battery supplies the corresponding dc switchboard bus load for a period of 2 hours without recharging.	Testing of each as-built battery will be performed by applying a simulated or real load, or a combination of simulated or real loads. The test will be conducted on a battery that has been fully charged and has been connected to a battery charger maintained at 135 ± 1 V for a period of no less than 24 hours prior to the test.	The battery terminal voltage is greater than or equal to 105 V after a period of no less than 2 hours, with an equivalent load greater than 500 amps.
2.c) Each EDS load group 1, 2, 3, and 4 inverter supplies the corresponding ac load.	Testing of each as-built inverter will be performed by applying a simulated or real load, or a combination of simulated or real loads, equivalent to a resistive load greater than 35 kW.	Each inverter provides a line-to-line output voltage of 208 ± 2% V at a frequency of 60 ± 0.5% Hz.

Table 2.6.2-2		
Component Name	**Tag No.**	**Component Location**
Load Group 1 Battery	EDS1-DB-1	Annex Building
Load Group 2 Battery	EDS2-DB-1	Annex Building
Load Group 3 Battery	EDS3-DB-1	Annex Building
Load Group 4 Battery	EDS4-DB-1	Annex Building
Load Group 1 Battery Charger	EDS1-DC-1	Annex Building
Load Group 2 Battery Charger	EDS2-DC-1	Annex Building
Load Group 3 Battery Charger	EDS3-DC-1	Annex Building
Load Group 4 Battery Charger	EDS4-DC-1	Annex Building
Load Group 1 125 Vdc Switchboard	EDS1-DS-1	Annex Building
Load Group 1 125 Vdc Switchboard	EDS1-DS-11	Annex Building
Load Group 2 125 Vdc Switchboard	EDS2-DS-1	Annex Building
Load Group 2 125 Vdc Switchboard	EDS2-DS-11	Annex Building
Load Group 3 125 Vdc Switchboard	EDS3-DS-1	Annex Building
Load Group 3 125 Vdc Switchboard	EDS3-DS-11	Annex Building
Load Group 4 125 Vdc Switchboard	EDS4-DS-1	Annex Building
Load Group 4 125 Vdc Switchboard	EDS4-DS-11	Annex Building
Load Group 1 Inverter	EDS1-DU-1	Annex Building
Load Group 2 Inverter	EDS2-DU-1	Annex Building
Load Group 3 Inverter	EDS3-DU-1	Annex Building
Load Group 4 Inverter	EDS4-DU-1	Annex Building

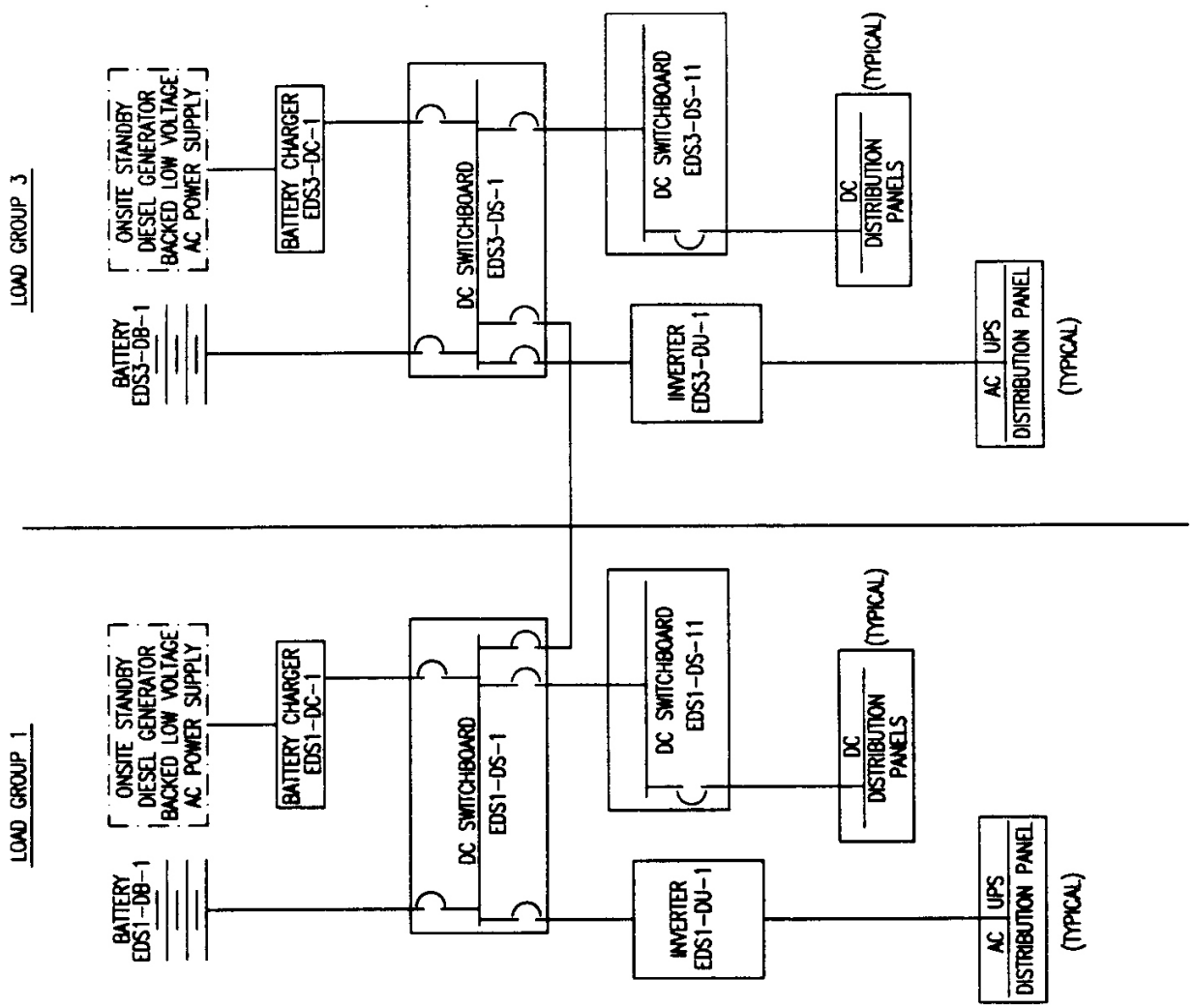

Figure 2.6.2-1 (Sheet 1 of 2)
Non-Class 1E dc and Uninterruptible Power Supply System

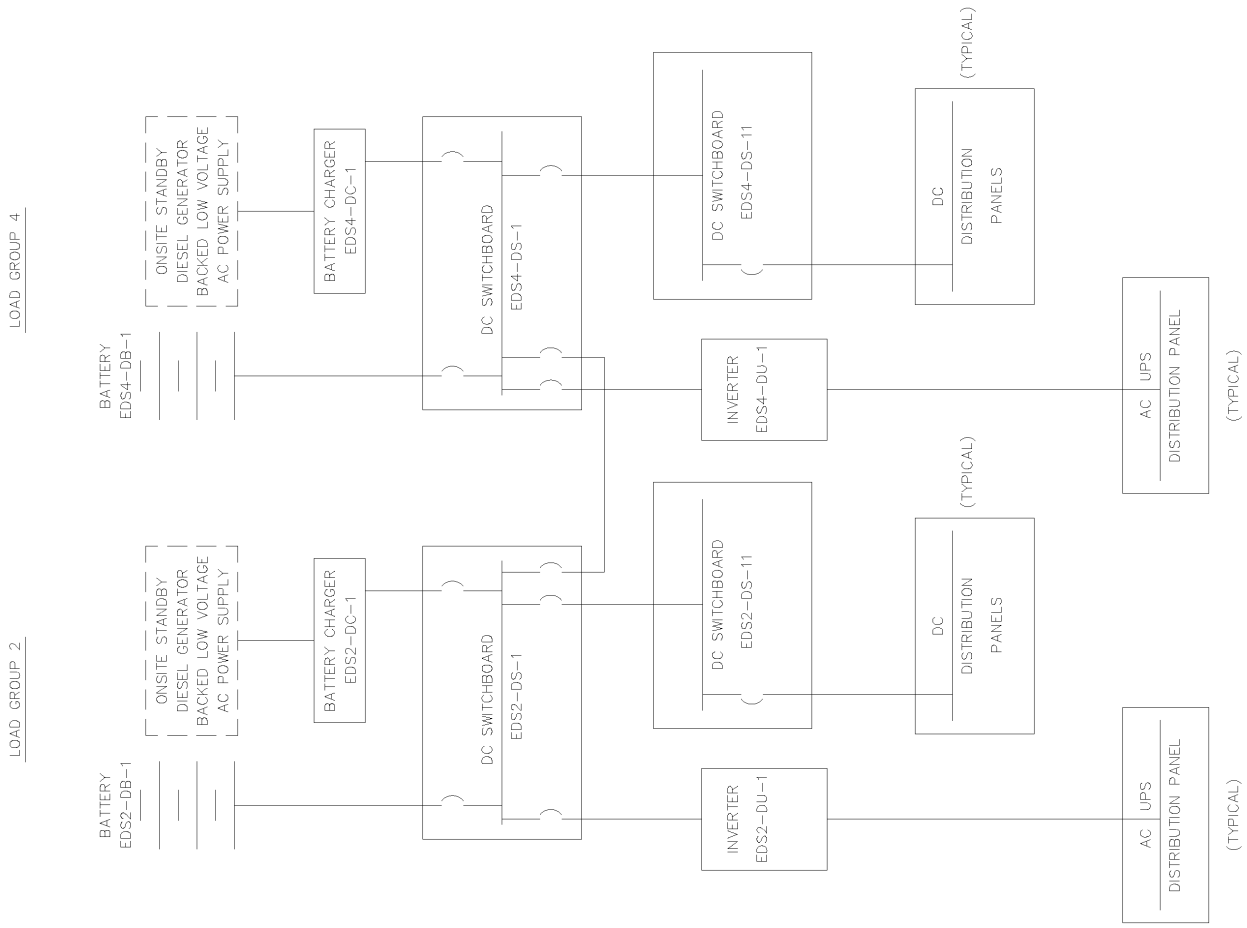

Figure 2.6.2-1 (Sheet 2 of 2)
Non-Class 1E dc and Uninterruptible Power Supply System

2.6.3 Class 1E dc and Uninterruptible Power Supply System

Design Description

The Class 1E dc and uninterruptible power supply system (IDS) provides dc and uninterruptible ac electrical power for safety-related equipment during normal and off-normal conditions.

The IDS is as shown in Figure 2.6.3-1 and the component locations of the IDS are as shown in Table 2.6.3-4.

1. The functional arrangement of the IDS is as described in the Design Description of this Section 2.6.3.

2. The seismic Category I equipment identified in Table 2.6.3-1 can withstand seismic design basis loads without loss of safety function.

3. Separation is provided between Class 1E divisions, and between Class 1E divisions and non-Class 1E cables.

4. The IDS provides the following safety-related functions:

   a) The IDS provides electrical independence between the Class 1E divisions.

   b) The IDS provides electrical isolation between the non-Class 1E ac power system and the non-Class 1E lighting in the MCR.

   c) Each IDS 24-hour battery bank supplies a dc switchboard bus load for a period of 24 hours without recharging.

   d) Each IDS 72-hour battery bank supplies a dc switchboard bus load for a period of 72 hours without recharging.

   e) The IDS spare battery bank supplies a dc load equal to or greater than the most severe switchboard bus load for the required period without recharging.

   f) Each IDS 24-hour inverter supplies its ac load.

   g) Each IDS 72-hour inverter supplies its ac load.

   h) Each IDS 24-hour battery charger provides the protection and safety monitoring system (PMS) with two loss-of-ac input voltage signals.

   i) The IDS supplies an operating voltage at the terminals of the Class 1E motor-operated valves identified in Tier 1 Material subsections 2.1.2, 2.2.1, 2.2.2, 2.2.3, 2.2.4, 2.3.2, and 2.3.6 that is greater than or equal to the minimum specified voltage.

5. The IDS provides the following nonsafety-related functions:

   a) Each IDS 24-hour battery charger supplies a dc switchboard bus load while maintaining the corresponding battery charged.

   b) Each IDS 72-hour battery charger supplies a dc switchboard bus load while maintaining the corresponding battery charged.

   c) Each IDS regulating transformer supplies an ac load when powered from the 480 V motor control center (MCC).

   d) The IDS Divisions B and C regulating transformers supply their post-72 hour ac loads when powered from an ancillary diesel generator.

6. Safety-related displays identified in Table 2.6.3-1 can be retrieved in the MCR.

7. The IDS dc battery fuses and battery charger circuit breakers, and dc distribution panels, MCCs, and their circuit breakers and fuses, are sized to supply their load requirements.

8. Circuit breakers and fuses in IDS battery, battery charger, dc distribution panel, and MCC circuits are rated to interrupt fault currents.

9. The IDS batteries, battery chargers, dc distribution panels, and MCCs are rated to withstand fault currents for the time required to clear the fault from its power source.

10. The IDS electrical distribution system cables are rated to withstand fault currents for the time required to clear the fault from its power source.

11. Displays of the parameters identified in Table 2.6.3-2 can be retrieved in the MCR.

Inspections, Tests, Analyses, and Acceptance Criteria

Table 2.6.3-3 specifies the inspections, tests, analyses, and associated acceptance criteria for the IDS.

Table 2.6.3-1				
Equipment Name	**Tag No.**	**Seismic Cat. I**	**Class 1E/ Qual. for Harsh Envir.**	**Safety-Related Display**
Division A 250 Vdc 24-Hour Battery Bank	IDSA-DB-1	Yes	Yes/No	No
Division B 250 Vdc 24-Hour Battery Bank 1	IDSB-DB-1	Yes	Yes/No	No
Division B 250 Vdc 72-Hour Battery Bank 2	IDSB-DB-2	Yes	Yes/No	No
Division C 250 Vdc 24-Hour Battery Bank 1	IDSC-DB-1	Yes	Yes/No	No
Division C 250 Vdc 72-Hour Battery Bank 2	IDSC-DB-2	Yes	Yes/No	No
Division D 250 Vdc 24-Hour Battery Bank	IDSD-DB-1	Yes	Yes/No	No
Spare 250 Vdc Battery Bank	IDSS-DB-1	Yes	Yes/No	No
Division A 24-Hour Battery Charger 1	IDSA-DC-1	Yes	Yes/No	No
Division B 24-Hour Battery Charger 1	IDSB-DC-1	Yes	Yes/No	No
Division B 72-Hour Battery Charger 2	IDSB-DC-2	Yes	Yes/No	No
Division C 24-Hour Battery Charger 1	IDSC-DC-1	Yes	Yes/No	No
Division C 72-Hour Battery Charger 2	IDSC-DC-2	Yes	Yes/No	No
Division D 24-Hour Battery Charger 1	IDSD-DC-1	Yes	Yes/No	No
Spare Battery Charger 1	IDSS-DC-1	Yes	Yes/No	No
Division A 250 Vdc Distribution Panel	IDSA-DD-1	Yes	Yes/No	No
Division B 250 Vdc Distribution Panel	IDSB-DD-1	Yes	Yes/No	No
Division C 250 Vdc Distribution Panel	IDSC-DD-1	Yes	Yes/No	No
Division D 250 Vdc Distribution Panel	IDSD-DD-1	Yes	Yes/No	No
Division A 120 Vac Distribution Panel 1	IDSA-EA-1	Yes	Yes/No	No
Division A 120 Vac Distribution Panel 2	IDSA-EA-2	Yes	Yes/No	No
Division B 120 Vac Distribution Panel 1	IDSB-EA-1	Yes	Yes/No	No
Division B 120 Vac Distribution Panel 2	IDSB-EA-2	Yes	Yes/No	No
Division B 120 Vac Distribution Panel 3	IDSB-EA-3	Yes	Yes/No	No
Division C 120 Vac Distribution Panel 1	IDSC-EA-1	Yes	Yes/No	No
Division C 120 Vac Distribution Panel 2	IDSC-EA-2	Yes	Yes/No	No
Division C 120 Vac Distribution Panel 3	IDSC-EA-3	Yes	Yes/No	No
Division D 120 Vac Distribution Panel 1	IDSD-EA-1	Yes	Yes/No	No

Table 2.6.3-1 (cont.)

Equipment Name	Tag No.	Seismic Cat. I	Class 1E/ Qual. for Harsh Envir.	Safety-Related Display
Division D 120 Vac Distribution Panel 2	IDSD-EA-2	Yes	Yes/No	No
Division A Fuse Panel 4	IDSA-EA-4	Yes	Yes/No	No
Division B Fuse Panel 4	IDSB-EA-4	Yes	Yes/No	No
Division B Fuse Panel 5	IDSB-EA-5	Yes	Yes/No	No
Division B Fuse Panel 6	IDSB-EA-6	Yes	Yes/No	No
Division C Fuse Panel 4	IDSC-EA-4	Yes	Yes/No	No
Division C Fuse Panel 5	IDSC-EA-5	Yes	Yes/No	No
Division C Fuse Panel 6	IDSC-EA-6	Yes	Yes/No	No
Division D Fuse Panel 4	IDSD-EA-4	Yes	Yes/No	No
Division A Fused Transfer Switch Box 1	IDSA-DF-1	Yes	Yes/No	No
Division B Fused Transfer Switch Box 1	IDSB-DF-1	Yes	Yes/No	No
Division B Fused Transfer Switch Box 2	IDSB-DF-2	Yes	Yes/No	No
Division C Fused Transfer Switch Box 1	IDSC-DF-1	Yes	Yes/No	No
Division C Fused Transfer Switch Box 2	IDSC-DF-2	Yes	Yes/No	No
Division D Fused Transfer Switch Box 1	IDSD-DF-1	Yes	Yes/No	No
Spare Fused Transfer Switch Box 1	IDSS-DF-1	Yes	Yes/No	No
Spare Battery 125/250 Vdc Disconnect Switch	IDSS-SW-1	Yes	Yes/No	No
Division A 250 Vdc MCC	IDSA-DK-1	Yes	Yes/No	No
Division B 250 Vdc MCC	IDSB-DK-1	Yes	Yes/No	No
Division C 250 Vdc MCC	IDSC-DK-1	Yes	Yes/No	No
Division D 250 Vdc MCC	IDSD-DK-1	Yes	Yes/No	No
Division A 250 Vdc Switchboard 1	IDSA-DS-1	Yes	Yes/No	Yes (Bus Voltage)
Division B 250 Vdc Switchboard 1	IDSB-DS-1	Yes	Yes/No	Yes (Bus Voltage)
Division B 250 Vdc Switchboard 2	IDSB-DS-2	Yes	Yes/No	Yes (Bus Voltage)

Table 2.6.3-1 (cont.)

Equipment Name	Tag No.	Seismic Cat. I	Class 1E/ Qual. for Harsh Envir.	Safety-Related Display
Division C 250 Vdc Switchboard 1	IDSC-DS-1	Yes	Yes/No	Yes (Bus Voltage)
Division C 250 Vdc Switchboard 2	IDSC-DS-2	Yes	Yes/No	Yes (Bus Voltage)
Division D 250 Vdc Switchboard 1	IDSD-DS-1	Yes	Yes/No	Yes (Bus Voltage)
Division A Regulating Transformer	IDSA-DT-1	Yes	Yes/No	No
Division B Regulating Transformer	IDSB-DT-1	Yes	Yes/No	No
Division C Regulating Transformer	IDSC-DT-1	Yes	Yes/No	No
Division D Regulating Transformer	IDSD-DT-1	Yes	Yes/No	No
Division A 24-Hour Inverter 1	IDSA-DU-1	Yes	Yes/No	No
Division B 24-Hour Inverter 1	IDSB-DU-1	Yes	Yes/No	No
Division B 72-Hour Inverter 2	IDSB-DU-2	Yes	Yes/No	No
Division C 24-Hour Inverter 1	IDSC-DU-1	Yes	Yes/No	No
Division C 72-Hour Inverter 2	IDSC-DU-2	Yes	Yes/No	No
Division D 24-Hour Inverter 1	IDSD-DU-1	Yes	Yes/No	No
Spare Termination Box 2	IDSS-DF-2	Yes	Yes/No	No
Spare Termination Box 3	IDSS-DF-3	Yes	Yes/No	No
Spare Termination Box 4	IDSS-DF-4	Yes	Yes/No	No
Spare Termination Box 5	IDSS-DF-5	Yes	Yes/No	No
Spare Termination Box 6	IDSS-DF-6	Yes	Yes/No	No

Table 2.6.3-2		
Equipment	**Tag No.**	**Display/Status Indication**
Division A Battery Monitor	IDSA-DV-1	Yes (Battery Ground Detection, Battery High Discharge Rate)
Division B 24-Hour Battery Monitor	IDSB-DV-1	Yes (Battery Ground Detection, Battery High Discharge Rate)
Division B 72-Hour Battery Monitor	IDSB-DV-2	Yes (Battery Ground Detection, Battery High Discharge Rate)
Division C 24-Hour Battery Monitor	IDSC-DV-1	Yes (Battery Ground Detection, Battery High Discharge Rate)
Division C 72-Hour Battery Monitor	IDSC-DV-2	Yes (Battery Ground Detection, Battery High Discharge Rate)
Division D Battery Monitor	IDSD-DV-1	Yes (Battery Ground Detection, Battery High Discharge Rate)
Division A Fused Transfer Switch Box	IDSA-DF-1	Yes (Battery Current, Battery Disconnect Switch Position)
Division B 24-Hour Fused Transfer Switch Box	IDSB-DF-1	Yes (Battery Current, Battery Disconnect Switch Position)
Division B 72-Hour Fused Transfer Switch Box	IDSB-DF-2	Yes (Battery Current, Battery Disconnect Switch Position)
Division C 24-Hour Fused Transfer Switch Box	IDSC-DF-1	Yes (Battery Current, Battery Disconnect Switch Position)
Division C 72-Hour Fused Transfer Switch Box	IDSC-DF-2	Yes (Battery Current, Battery Disconnect Switch Position)
Division D Fused Transfer Switch Box	IDSD-DF-1	Yes (Battery Current, Battery Disconnect Switch Position)

Table 2.6.3-2 (cont.)		
Equipment	**Tag No.**	**Display/Status Indication**
Division A Battery Charger	IDSA-DC-1	Yes (Charger Output Current, Charger Trouble(1))
Division B 24-Hour Battery Charger	IDSB-DC-1	Yes (Charger Output Current, Charger Trouble(1))
Division B 72-Hour Battery Charger	IDSB-DC-2	Yes (Charger Output Current, Charger Trouble(1))
Division C 24-Hour Battery Charger	IDSC-DC-1	Yes (Charger Output Current, Charger Trouble(1))
Division C 72-Hour Battery Charger	IDSC-DC-2	Yes (Charger Output Current, Charger Trouble(1))
Division D Battery Charger	IDSD-DC-1	Yes (Charger Output Current, Charger Trouble(1))

Note: (1) Battery charger trouble includes charger dc output under/over voltage

Table 2.6.3-3
Inspections, Tests, Analyses, and Acceptance Criteria

Design Commitment	Inspections, Tests, Analyses	Acceptance Criteria
1. The functional arrangement of the IDS is as described in the Design Description of this Section 2.6.3.	Inspection of the as-built system will be performed.	The as-built IDS conforms with the functional arrangement as described in the Design Description of this Section 2.6.3.
2. The seismic Category I equipment identified in Table 2.6.3-1 can withstand seismic design basis loads without loss of safety function.	i) Inspection will be performed to verify that the seismic Category I equipment identified in Table 2.6.3-1 is located on the Nuclear Island. ii) Type tests, analyses, or a combination of type tests and analyses of seismic Category I equipment will be performed. iii) Inspection will be performed for the existence of a report verifying that the as-built equipment including anchorage is seismically bounded by the tested or analyzed conditions.	i) The seismic Category I equipment identified in Table 2.6.3-1 is located on the Nuclear Island. ii) A report exists and concludes that the seismic Category I equipment can withstand seismic design basis loads without loss of safety function. iii) A report exists and concludes that the as-built equipment including anchorage is seismically bounded by the tested or analyzed conditions.
3. Separation is provided between Class 1E divisions, and between Class 1E divisions and non-Class 1E cables.	See Tier 1 Material, Table 3.3-6, item 7.d.	See Tier 1 Material, Table 3.3-6, item 7.d.
4.a) The IDS provides electrical independence between the Class 1E divisions.	Testing will be performed on the IDS by providing a simulated test signal in each Class 1E division.	A simulated test signal exists at the Class 1E equipment identified in Table 2.6.3-1 when the assigned Class 1E division is provided the test signal.
4.b) The IDS provides electrical isolation between the non-Class 1E ac power system and the non-Class 1E lighting in the MCR.	Type tests, analyses, or a combination of type tests and analyses of the isolation devices will be performed.	A report exists and concludes that the battery chargers, regulating transformers, and isolation fuses prevent credible faults from propagating into the IDS.

Table 2.6.3-3 (cont.)
Inspections, Tests, Analyses, and Acceptance Criteria

Design Commitment	Inspections, Tests, Analyses	Acceptance Criteria
4.c) Each IDS 24-hour battery bank supplies a dc switchboard bus load for a period of 24 hours without recharging.	Testing of each 24-hour as-built battery bank will be performed by applying a simulated or real load, or a combination of simulated or real loads which envelope the battery bank design duty cycle. The test will be conducted on a battery bank that has been fully charged and has been connected to a battery charger maintained at 270±2 V for a period of no less than 24 hours prior to the test.	The battery terminal voltage is greater than or equal to 210 V after a period of no less than 24 hours with an equivalent load that equals or exceeds the battery bank design duty cycle capacity.
4.d) Each IDS 72-hour battery bank supplies a dc switchboard bus load for a period of 72 hours without recharging.	Testing of each 72-hour as-built battery bank will be performed by applying a simulated or real load, or a combination of simulated or real loads which envelope the battery bank design duty cycle. The test will be conducted on a battery bank that has been fully charged and has been connected to a battery charger maintained at 270±2 V for a period of no less than 24 hours prior to the test.	The battery terminal voltage is greater than or equal to 210 V after a period of no less than 72 hours with an equivalent load that equals or exceeds the battery bank design duty cycle capacity.
4.e) The IDS spare battery bank supplies a dc load equal to or greater than the most severe switchboard bus load for the required period without recharging.	Testing of the as-built spare battery bank will be performed by applying a simulated or real load, or a combination of simulated or real loads which envelope the most severe of the division batteries design duty cycle. The test will be conducted on a battery bank that has been fully charged and has been connected to a battery charger maintained at 270±2 V for a period of no less than 24 hours prior to the test.	The battery terminal voltage is greater than or equal to 210 V after a period with a load and duration that equals or exceeds the most severe battery bank design duty cycle capacity.

Table 2.6.3-3 (cont.)
Inspections, Tests, Analyses, and Acceptance Criteria

Design Commitment	Inspections, Tests, Analyses	Acceptance Criteria
4.f) Each IDS 24-hour inverter supplies its ac load.	Testing of each 24-hour as-built inverter will be performed by applying a simulated or real load, or a combination of simulated or real loads, equivalent to a resistive load greater than 12 kW. The inverter input voltage will be no more than 210 Vdc during the test.	Each 24-hour inverter supplies a line-to-line output voltage of 208 ± 2% V at a frequency of 60 ± 0.5% Hz.
4.g) Each IDS 72-hour inverter supplies its ac load.	Testing of each 72-hour as-built inverter will be performed by applying a simulated or real load, or a combination of simulated or real loads, equivalent to a resistive load greater than 7 kW. The inverter input voltage will be no more than 210 Vdc during the test.	Each 72-hour inverter supplies a line-to-line output voltage of 208 ± 2% V at a frequency of 60 ± 0.5% Hz.
4.h) Each IDS 24-hour battery charger provides the PMS with two loss-of-ac input voltage signals.	Testing will be performed by simulating a loss of input voltage to each 24-hour battery charger.	Two PMS input signals exist from each 24-hour battery charger indicating loss of ac input voltage when the loss-of-input voltage condition is simulated.
4.i) The IDS supplies an operating voltage at the terminals of the Class 1E motor operated valves identified in Tier 1 Material subsections 2.1.2, 2.2.1, 2.2.2, 2.2.3, 2.2.4, 2.3.2, and 2.3.6 that is greater than or equal to the minimum specified voltage.	Testing will be performed by stroking each specified motor-operated valve and measuring the terminal voltage at the motor starter input terminals with the motor operating. The battery terminal voltage will be no more than 210 Vdc during the test.	The motor starter input terminal voltage is greater than or equal 200 Vdc with the motor operating.
5.a) Each IDS 24-hour battery charger supplies a dc switchboard bus load while maintaining the corresponding battery charged.	Testing of each as-built 24-hour battery charger will be performed by applying a simulated or real load, or a combination of simulated or real loads.	Each 24-hour battery charger provides an output current of at least 150 A with an output voltage in the range 210 to 280 V.
5.b) Each IDS 72-hour battery charger supplies a dc switchboard bus load while maintaining the corresponding battery charged.	Testing of each 72-hour as-built battery charger will be performed by applying a simulated or real load, or a combination of simulated or real loads.	Each 72-hour battery charger provides an output current of at least 125 A with an output voltage in the range 210 to 280 V.

Table 2.6.3-3 (cont.)
Inspections, Tests, Analyses, and Acceptance Criteria

Design Commitment	Inspections, Tests, Analyses	Acceptance Criteria
5.c) Each IDS regulating transformer supplies an ac load when powered from the 480 V MCC.	Testing of each as-built regulating transformer will be performed by applying a simulated or real load, or a combination of simulated or real loads, equivalent to a resistive load greater than 30 kW when powered from the 480 V MCC.	Each regulating transformer supplies a line-to-line output voltage of 208 ± 2% V.
5.d) The IDS Divisions B and C regulating transformers supply their post-72-hour ac loads when powered from an ancillary diesel generator.	Inspection of the as-built system will be performed.	i) Ancillary diesel generator 1 is electrically connected to regulating transformer IDSC-DT-1 ii) Ancillary diesel generator 2 is electrically connected to regulating transformer IDSB-DT-1.
6. Safety-related displays identified in Table 2.6.3-1 can be retrieved in the MCR.	Inspection will be performed for retrievability of the safety-related displays in the MCR.	Safety-related displays identified in Table 2.6.3-1 can be retrieved in the MCR.
7. The IDS dc battery fuses and battery charger circuit breakers, and dc distribution panels, MCCs, and their circuit breakers and fuses, are sized to supply their load requirements.	Analyses for the as-built IDS dc electrical distribution system to determine the capacities of the battery fuses and battery charger circuit breakers, and dc distribution panels, MCCs, and their circuit breakers and fuses, will be performed.	Analyses for the as-built IDS dc electrical distribution system exist and conclude that the capacities of as-built IDS battery fuses and battery charger circuit breakers, and dc distribution panels, MCCs, and their circuit breakers and fuses, as determined by their nameplate ratings, exceed their analyzed load requirements.
8. Circuit breakers and fuses in IDS battery, battery charger, dc distribution panel, and MCC circuits are rated to interrupt fault currents.	Analyses for the as-built IDS dc electrical distribution system to determine fault currents will be performed.	Analyses for the as-built IDS dc electrical distribution system exist and conclude that the analyzed fault currents do not exceed the interrupt capacity of circuit breakers and fuses in the battery, battery charger, dc distribution panel, and MCC circuits, as determined by their nameplate ratings.

Table 2.6.3-3 (cont.)
Inspections, Tests, Analyses, and Acceptance Criteria

Design Commitment	Inspections, Tests, Analyses	Acceptance Criteria
9. The IDS batteries, battery chargers, dc distribution panels, and MCCs are rated to withstand fault currents for the time required to clear the fault from its power source.	Analyses for the as-built IDS dc electrical distribution system to determine fault currents will be performed.	Analyses for the as-built IDS dc electrical distribution system exist and conclude that the fault current capacities of as-built IDS batteries, battery chargers, dc distribution panels, and MCCs, as determined by manufacturer's ratings, exceed their analyzed fault currents for the time required to clear the fault from its power source as determined by the circuit interrupting device coordination analyses.
10. The IDS electrical distribution system cables are rated to withstand fault currents for the time required to clear the fault from its power source.	Analyses for the as-built IDS dc electrical distribution system to determine fault currents will be performed.	Analyses for the as-built IDS dc electrical distribution system exist and conclude that the IDS dc electrical distribution system cables will withstand the analyzed fault currents, as determined by manufacturer's ratings, for the time required to clear the fault from its power source as determined by the circuit interrupting device coordination analyses.
11. Displays of the parameters identified in Table 2.6.3-2 can be retrieved in the MCR.	Inspection will be performed for retrievability of the displays identified in Table 2.6.3-2 in the MCR.	Displays identified in Table 2.6.3-2 can be retrieved in the MCR.

Table 2.6.3-4		
Component Name	**Tag No.**	**Component Location**
Division A 250 Vdc 24-Hour Battery Bank	IDSA-DB-1	Auxiliary Building
Division B 250 Vdc 24-Hour Battery Bank 1	IDSB-DB-1	Auxiliary Building
Division B 250 Vdc 72-Hour Battery Bank 2	IDSB-DB-2	Auxiliary Building
Division C 250 Vdc 24-Hour Battery Bank 1	IDSC-DB-1	Auxiliary Building
Division C 250 Vdc 72-Hour Battery Bank 2	IDSC-DB-2	Auxiliary Building
Division D 250 Vdc 24-Hour Battery Bank	IDSD-DB-1	Auxiliary Building
Spare 125 Vdc Battery Bank	IDSS-DB-1	Auxiliary Building
Division A 24-Hour Battery Charger 1	IDSA-DC-1	Auxiliary Building
Division B 24-Hour Battery Charger 1	IDSB-DC-1	Auxiliary Building
Division B 72-Hour Battery Charger 2	IDSB-DC-2	Auxiliary Building
Division C 24-Hour Battery Charger 1	IDSC-DC-1	Auxiliary Building
Division C 72-Hour Battery Charger 2	IDSC-DC-2	Auxiliary Building
Division D 24-Hour Battery Charger 1	IDSD-DC-1	Auxiliary Building
Spare Battery Charger 1	IDSS-DC-1	Auxiliary Building
Division A 250 Vdc Distribution Panel	IDSA-DD-1	Auxiliary Building
Division B 250 Vdc Distribution Panel	IDSB-DD-1	Auxiliary Building
Division C 250 Vdc Distribution Panel	IDSC-DD-2	Auxiliary Building
Division D 250 Vdc Distribution Panel	IDSD-DD-1	Auxiliary Building
Division A 120 Vac Distribution Panel 1	IDSA-EA-1	Auxiliary Building
Division A 120 Vac Distribution Panel 2	IDSA-EA-2	Auxiliary Building
Division B 120 Vac Distribution Panel 1	IDSB-EA-1	Auxiliary Building
Division B 120 Vac Distribution Panel 2	IDSB-EA-2	Auxiliary Building
Division B 120 Vac Distribution Panel 3	IDSB-EA-3	Auxiliary Building
Division C 120 Vac Distribution Panel 1	IDSC-EA-1	Auxiliary Building
Division C 120 Vac Distribution Panel 2	IDSC-EA-2	Auxiliary Building
Division C 120 Vac Distribution Panel 3	IDSC-EA-3	Auxiliary Building
Division D 120 Vac Distribution Panel 1	IDSD-EA-1	Auxiliary Building
Division D 120 Vac Distribution Panel 2	IDSD-EA-2	Auxiliary Building

Table 2.6.3-4 (cont.)		
Component Name	**Tag No.**	**Component Location**
Division A Fuse Panel 4	IDSA-EA-4	Auxiliary Building
Division B Fuse Panel 4	IDSB-EA-4	Auxiliary Building
Division B Fuse Panel 5	IDSB-EA-5	Auxiliary Building
Division B Fuse Panel 6	IDSB-EA-6	Auxiliary Building
Division C Fuse Panel 4	IDSC-EA-4	Auxiliary Building
Division C Fuse Panel 5	IDSC-EA-5	Auxiliary Building
Division C Fuse Panel 6	IDSC-EA-6	Auxiliary Building
Division D Fuse Panel 4	IDSD-EA-4	Auxiliary Building
Division A Fused Transfer Switch Box 1	IDSA-DF-1	Auxiliary Building
Division B Fused Transfer Switch Box 1	IDSB-DF-1	Auxiliary Building
Division B Fused Transfer Switch Box 2	IDSB-DF-2	Auxiliary Building
Division C Fused Transfer Switch Box 1	IDSC-DF-1	Auxiliary Building
Division C Fused Transfer Switch Box 2	IDSC-DF-2	Auxiliary Building
Division D Fused Transfer Switch Box 1	IDSD-DF-1	Auxiliary Building
Spare Fused Transfer Switch Box 1	IDSS-DF-1	Auxiliary Building
Spare Battery 125/240 Vdc Disconnect Switch	IDSS-SW-1	Auxiliary Building
Division A 250 Vdc MCC	IDSA-DK-1	Auxiliary Building
Division B 250 Vdc MCC	IDSB-DK-1	Auxiliary Building
Division C 250 Vdc MCC	IDSC-DK-1	Auxiliary Building
Division D 250 Vdc MCC	IDSD-DK-1	Auxiliary Building
Division A 250 Vdc Switchboard 1	IDSA-DS-1	Auxiliary Building
Division B 250 Vdc Switchboard 1	IDSB-DS-1	Auxiliary Building
Division B 250 Vdc Switchboard 2	IDSB-DS-2	Auxiliary Building
Division C 250 Vdc Switchboard 1	IDSC-DS-1	Auxiliary Building
Division C 250 Vdc Switchboard 2	IDSC-DS-2	Auxiliary Building
Division D 250 Vdc Switchboard 1	IDSD-DS-1	Auxiliary Building
Division A Regulating Transformer	IDSA-DT-1	Auxiliary Building
Division B Regulating Transformer	IDSB-DT-1	Auxiliary Building

Table 2.6.3-4 (cont.)		
Component Name	**Tag No.**	**Component Location**
Division C Regulating Transformer	IDSC-DT-1	Auxiliary Building
Division D Regulating Transformer	IDSD-DT-1	Auxiliary Building
Division A 24-Hour Inverter 1	IDSA-DU-1	Auxiliary Building
Division B 24-Hour Inverter 1	IDSB-DU-1	Auxiliary Building
Division B 72-Hour Inverter 2	IDSB-DU-2	Auxiliary Building
Division C 24-Hour Inverter 1	IDSC-DU-1	Auxiliary Building
Division C 72-Hour Inverter 2	IDSC-DU-2	Auxiliary Building
Division D 24-Hour Inverter 1	IDSD-DU-1	Auxiliary Building
Spare Termination Box 2	IDSS-DF-2	Auxiliary Building
Spare Termination Box 3	IDSS-DF-3	Auxiliary Building
Spare Termination Box 4	IDSS-DF-4	Auxiliary Building
Spare Termination Box 5	IDSS-DF-5	Auxiliary Building
Spare Termination Box 6	IDSS-DF-6	Auxiliary Building

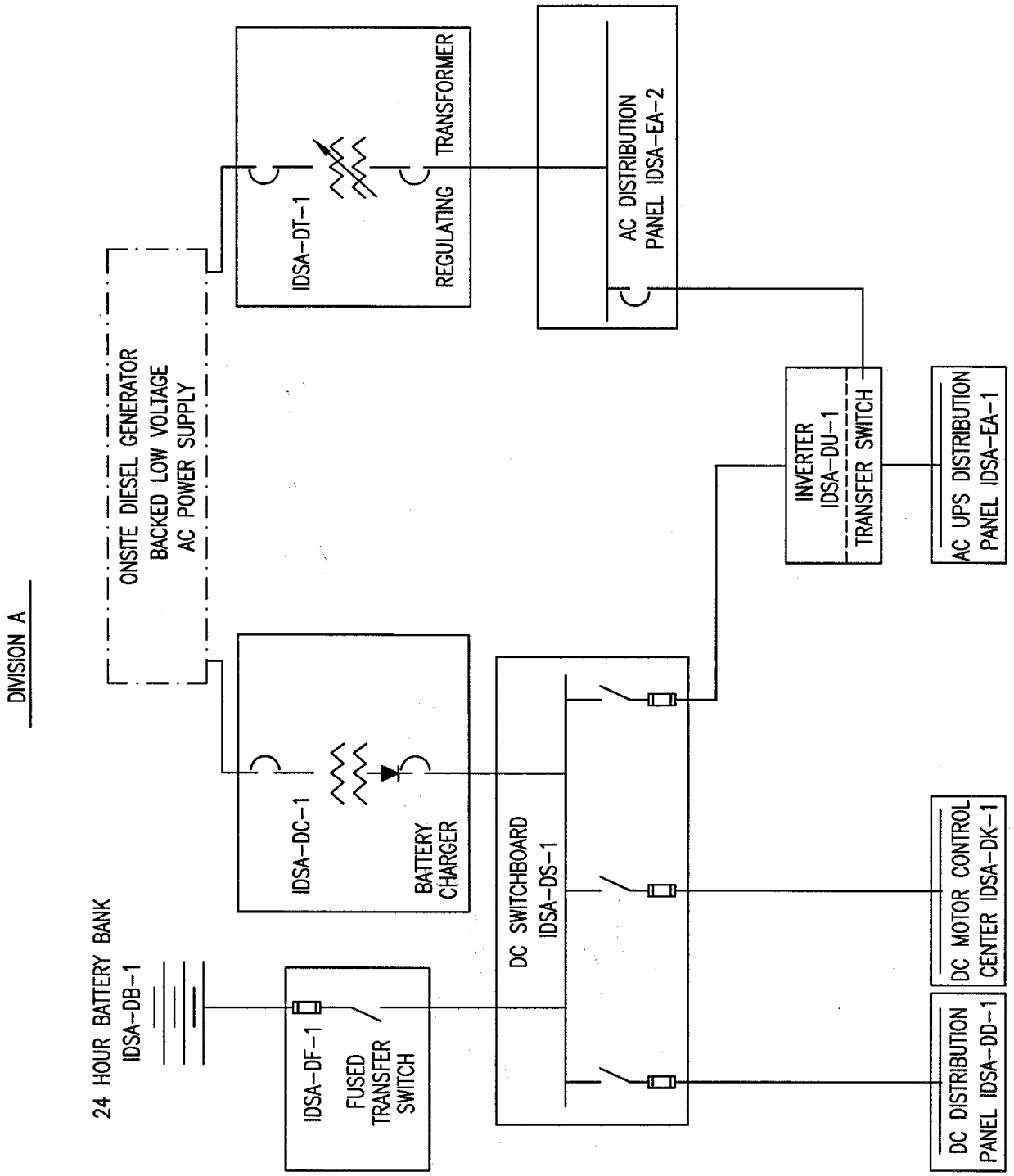

Figure 2.6.3-1 (Sheet 1 of 4)
Class 1E dc and Uninterruptible Power Supply System (Division A)

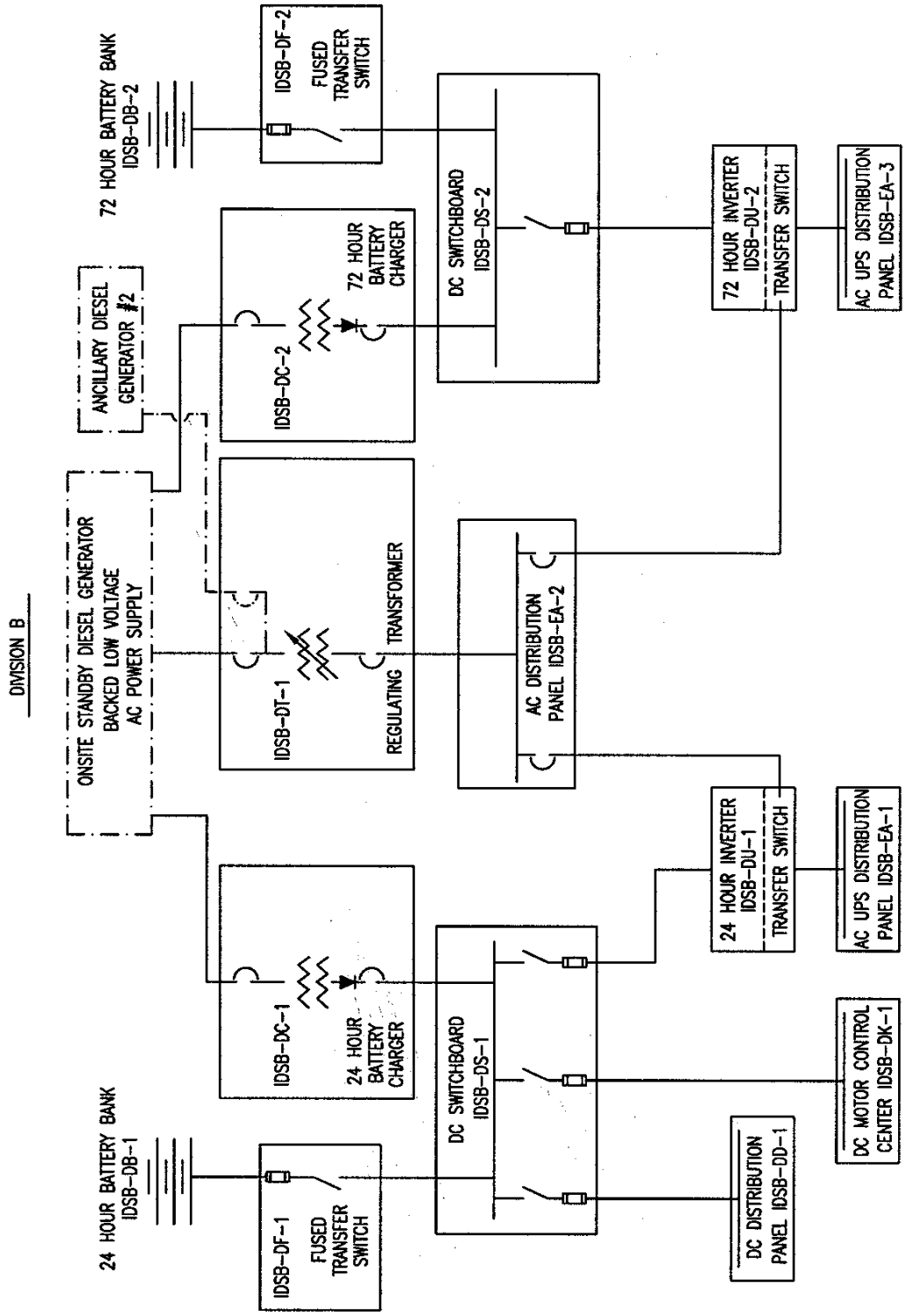

Figure 2.6.3-1 (Sheet 2 of 4)
Class 1E dc and Uninterruptible Power Supply System (Division B)

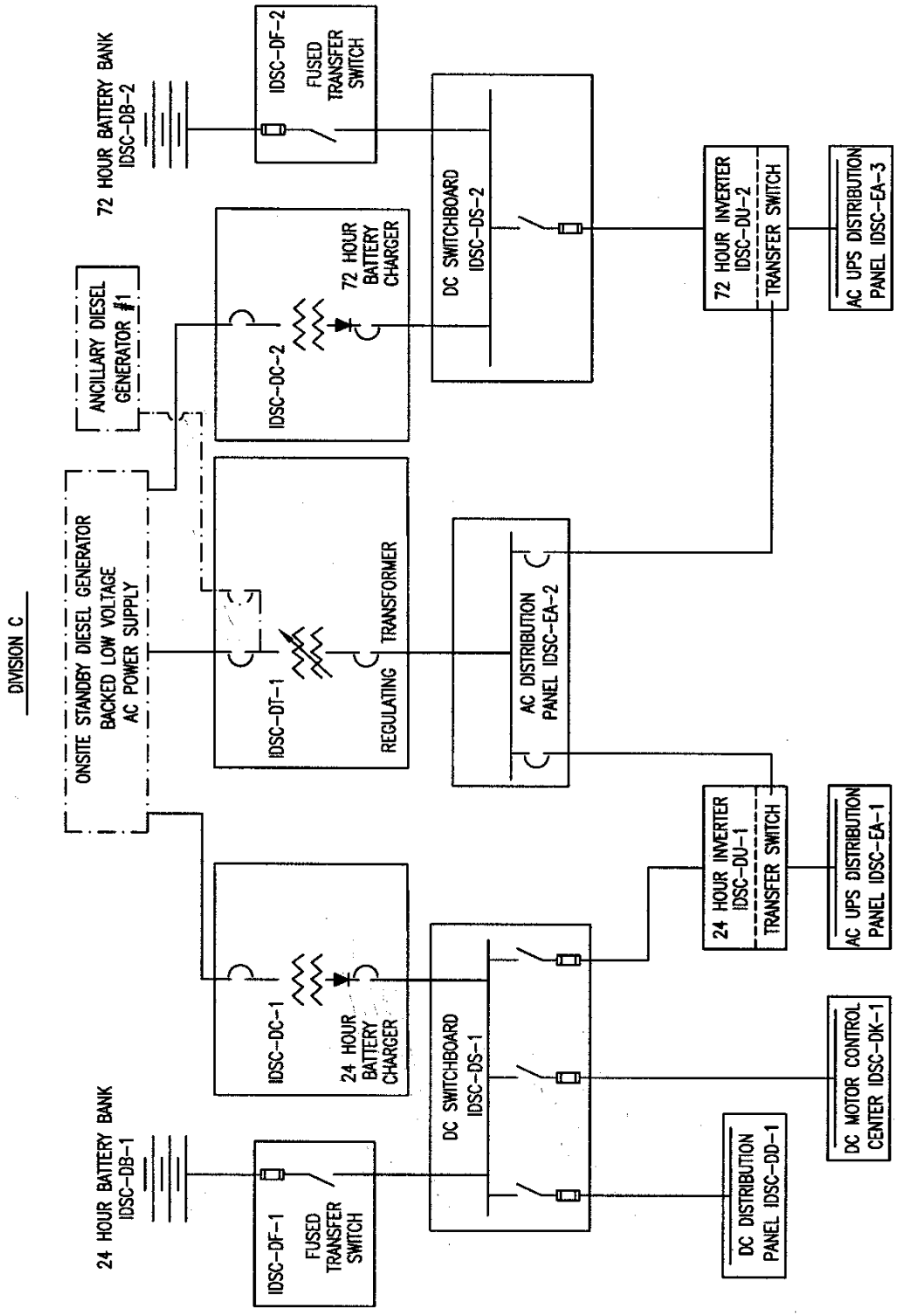

Figure 2.6.3-1 (Sheet 3 of 4)
Class 1E dc and Uninterruptible Power Supply System (Division C)

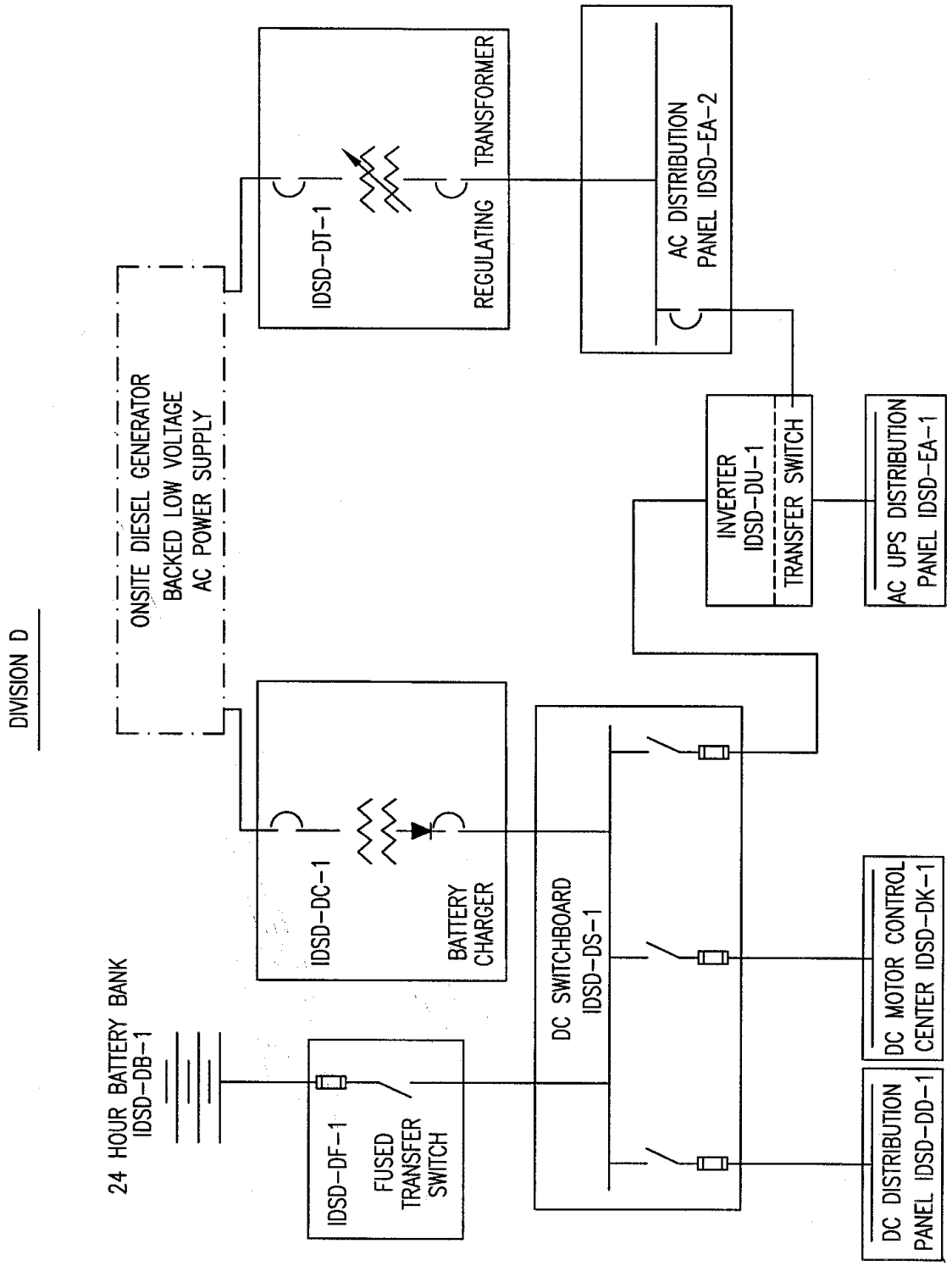

Figure 2.6.3-1 (Sheet 4 of 4)
Class 1E dc and Uninterruptible Power Supply System (Division D)

2.6.4 Onsite Standby Power System

Design Description

The onsite standby power system (ZOS) provides backup ac electrical power for nonsafety-related loads during normal and off-normal conditions.

The ZOS has two standby diesel generator units and the component locations of the ZOS are as shown in Table 2.6.4-2. The centerline of the diesel engine exhaust gas discharge is located more than twenty (20) feet higher than that of the combustion air intake.

1. The functional arrangement of the ZOS is as described in the Design Description of this Section 2.6.4.

2. The ZOS provides the following nonsafety-related functions:

   a) On loss of power to a 6900 volt diesel-backed bus, the associated diesel generator automatically starts and produces ac power at rated voltage and frequency. The source circuit breakers and bus load circuit breakers are opened, and the generator is connected to the bus.

   b) Each diesel generator unit is sized to supply power to the selected nonsafety-related electrical components.

   c) Automatic-sequence loads are sequentially loaded on the associated buses.

3. Displays of diesel generator status (running/not running) and electrical output power (watts) can be retrieved in the main control room (MCR).

4. Controls exist in the MCR to start and stop each diesel generator.

Inspections, Tests, Analyses, and Acceptance Criteria

Table 2.6.4-1 specifies the inspections, tests, analyses, and associated acceptance criteria for the ZOS.

Table 2.6.4-1
Inspections, Tests, Analyses, and Acceptance Criteria

Design Commitment	Inspections, Tests, Analyses	Acceptance Criteria
1. The functional arrangement of the ZOS is as described in the Design Description of this Section 2.6.4.	Inspection of the as-built system will be performed.	The as-built ZOS conforms with the functional arrangement as described in the Design Description of this Section 2.6.4.
2.a) On loss of power to a 6900 volt diesel-backed bus, the associated diesel generator automatically starts and produces ac power at rated voltage and frequency. The source circuit breakers and bus load circuit breakers are opened, and the generator is connected to the bus.	Tests on the as-built ZOS system will be conducted by providing a simulated loss-of-voltage signal. The starting air supply receiver will not be replenished during the test.	Each as-built diesel generator automatically starts on receiving a simulated loss-of-voltage signal and attains a voltage of 6900 ± 10% V and frequency 60 ± 5% Hz after the start signal is initiated and opens ac power system breakers on the associated 6900 V bus.
2.b) Each diesel generator unit is sized to supply power to the selected nonsafety-related electrical components.	Each diesel generator will be operated with a load of 4000 kW or greater and a power factor between 0.9 and 1.0 for a time period required to reach engine temperature equilibrium plus 2.5 hours.	Each diesel generator provides power to the load with a generator terminal voltage of 6900 ± 10% V and a frequency of 60 ± 5% Hz.
2.c) Automatic-sequence loads are sequentially loaded on the associated buses.	An actual or simulated signal is initiated to start the load sequencer operation. Output signals will be monitored to determine the operability of the load sequencer. Time measurements are taken to determine the load stepping intervals.	The load sequencer initiates a closure signal within ±5 seconds of the set intervals to connect the loads.
3. Displays of diesel generator status (running/not running) and electrical output power (watts) can be retrieved in the MCR.	Inspection will be performed for retrievability of the displays in the MCR.	Displays of diesel generator status and electrical output power can be retrieved in the MCR.
4. Controls exist in the MCR to start and stop each diesel generator.	A test will be performed to verify that controls in the MCR can start and stop each diesel generator.	Controls in the MCR operate to start and stop each diesel generator.

Table 2.6.4-2		
Component Name	**Tag No.**	**Component Location**
Onsite Diesel Generator A Package	ZOS-MS-05A	Diesel Generator Building
Onsite Diesel Generator B Package	ZOS-MS-05B	Diesel Generator Building

2.6.5 Lighting System

Design Description

The lighting system (ELS) provides the normal and emergency lighting in the main control room (MCR) and at the remote shutdown workstation (RSW).

1. The functional arrangement of the ELS is as described in the Design Description of this Section 2.6.5.

2. The ELS has six groups of emergency lighting fixtures located in the MCR and at the RSW. Each group is powered by one of the Class 1E inverters. The ELS has four groups of panel lighting fixtures located on or near safety panels in the MCR. Each group is powered by one of the Class 1E inverters in Divisions B and C (one 24-hour and one 72-hour inverter in each Division).

3. The lighting fixtures located in the MCR utilize seismic supports.

4. The panel lighting circuits are classified as associated and treated as Class 1E. These lighting circuits are routed with the Divisions B and C Class 1E circuits. Separation is provided between ELS associated divisions and between associated divisions and non-Class 1E cable.

5. The normal lighting can provide 50 foot candles at the safety panel and at the workstations in the MCR and at the RSW.

6. The emergency lighting can provide 10 foot candles at the safety panel and at the workstations in the MCR and at the RSW.

Inspections, Tests, Analyses, and Acceptance Criteria

Table 2.6.5-1 specifies the inspections, tests, analyses, and associated acceptance criteria for the ELS.

Table 2.6.5-1
Inspections, Tests, Analyses, and Acceptance Criteria

Design Commitment	Inspections, Tests, Analyses	Acceptance Criteria
1. The functional arrangement of the ELS is as described in the Design Description of this Section 2.6.5.	Inspection of the as-built system will be performed.	The as-built ELS conforms with the functional arrangement as described in the Design Description of this Section 2.6.5.
2. The ELS has six groups of emergency lighting fixtures located in the MCR and at the RSW. Each group is powered by one of the Class 1E inverters. The ELS has four groups of panel lighting fixtures located on or near safety panels in the MCR. Each group is powered by one of the Class 1E inverters in Divisions B and C (one 24-hour and one 72-hour inverter in each Division).	i) Inspection of the as-built system will be performed. ii) Testing of the as-built system will be performed using one Class 1E inverter at a time.	i) The as-built ELS has six groups of emergency lighting fixtures located in the MCR and at the RSW. The ELS has four groups of panel lighting fixtures located on or near safety panels in the MCR. ii) Each of the six as-built emergency lighting groups is supplied power from its respective Class 1E inverter and each of the four as-built panel lighting groups is supplied power from its respective Class 1E inverter.
3. The lighting fixtures located in the MCR utilize seismic supports.	i) Inspection will be performed to verify that the lighting fixtures located in the MCR are located on the Nuclear Island. ii) Analysis of seismic supports will be performed.	i) The lighting fixtures located in the MCR are located on the Nuclear Island. ii) A report exists and concludes that the seismic supports can withstand seismic design basis loads.
4. The panel lighting circuits are classified as associated and treated as Class 1E. These lighting circuits are routed with the Divisions B and C Class 1E circuits. Separation is provided between ELS associated divisions and between associated divisions and non-Class 1E cable.	See Tier 1 Material, Table 3.3-6, item 7.d.	See Tier 1 Material, Table 3.3-6, item 7.d.

Table 2.6.5-1 (cont.)
Inspections, Tests, Analyses, and Acceptance Criteria

Design Commitment	Inspections, Tests, Analyses	Acceptance Criteria
5. The normal lighting can provide 50 foot candles at the safety panel and at the workstations in the MCR and at the RSW.	i) Testing of the as-built normal lighting in the MCR will be performed.	i) When adjusted for maximum illumination and powered by the main ac power system, the normal lighting in the MCR provides at least 50 foot candles at the safety panel and at the workstations.
	ii) Testing of the as-built normal lighting at the RSW will be performed.	ii) When adjusted for maximum illumination and powered by the main ac power system, the normal lighting in the MCR provides at least 50 foot candles at the safety panel and at the workstations.
6. The emergency lighting can provide 10 foot candles at the safety panel and at the workstations in the MCR and at the RSW.	i) Testing of the as-built emergency lighting in the MCR will be performed.	i) When adjusted for maximum illumination and powered by the six Class 1E inverters, the emergency lighting in the MCR provides at least 10 foot candles at the safety panel and at the workstations.
	ii) Testing of the as-built emergency lighting at the RSW will be performed.	ii) When adjusted for maximum illumination and powered by the six Class 1E inverters, the emergency lighting provides at least 10 foot candles at the RSW.

2.6.6 Grounding and Lightning Protection System

Design Description

The grounding and lightning protection system (EGS) provides electrical grounding for instrumentation grounding, equipment grounding, and lightning protection during normal and off-normal conditions.

1. The EGS provides an electrical grounding system for: (1) instrument/computer grounding; (2) electrical system grounding of the neutral points of the main generator, main step-up transformers, auxiliary transformers, load center transformers, and onsite standby diesel generators; and (3) equipment grounding of equipment enclosures, metal structures, metallic tanks, ground bus of switchgear assemblies, load centers, motor control centers, and control cabinets. Lightning protection is provided for exposed structures and buildings housing safety-related and fire protection equipment. Each grounding system and lightning protection system is grounded to the station grounding grid.

Inspections, Tests, Analyses, and Acceptance Criteria

Table 2.6.6-1 specifies the inspections, tests, analyses, and associated acceptance criteria for the EGS.

Table 2.6.6-1
Inspections, Tests, Analyses, and Acceptance Criteria

Design Commitment	Inspections, Tests, Analyses	Acceptance Criteria
1. The EGS provides an electrical grounding system for: (1) instrument/computer grounding; (2) electrical system grounding of the neutral points of the main generator, main step-up transformers, auxiliary transformers, load center transformers, auxiliary and onsite standby diesel generators; and (3) equipment grounding of equipment enclosures, metal structures, metallic tanks, ground bus of switchgear assemblies, load centers, motor control centers, and control cabinets. Lightning protection is provided for exposed structures and buildings housing safety-related and fire protection equipment. Each grounding system and lighting protection system is grounded to the station grounding grid.	i) An inspection for the instrument/computer grounding system connection to the station grounding grid will be performed. ii) An inspection for the electrical system grounding connection to the station grounding grid will be performed. iii) An inspection for the equipment grounding system connection to the station grounding grid will be performed. iv) An inspection for the lightning protection system connection to the station grounding grid will be performed.	i) A connection exists between the instrument/computer grounding system and the station grounding grid. ii) A connection exists between the electrical system grounding and the station grounding grid. iii) A connection exists between the equipment grounding system and the station grounding grid. iv) A connection exists between the lighting protection system and the station grounding grid.

2.6.7 Special Process Heat Tracing System

No entry for this system.

2.6.8 Cathodic Protection System

No entry.

2.6.9 Plant Security System

Design Description

The physical security system provides physical features to detect, delay, assist response to, and defend against the design basis threat (DBT) for radiological sabotage. The physical security system consists of physical barriers and an intrusion detection system. The details of the physical security system are categorized as Safeguards Information. The physical security system provides protection for vital equipment and plant personnel.

1. The external walls, doors, ceiling, and floors in the main control room, the central alarm station, and the secondary alarm station are bullet-resistant to at least Underwriters Laboratory Ballistic Standard 752, level 4.

2. Not used.

3. Secondary security power supply system for alarm annunciator equipment and non-portable communications equipment is located within a vital area.

4. Vital areas are locked and alarmed with active intrusion detection systems that annunciate in the central and secondary alarm stations upon intrusion into a vital area.

5. a) Security alarm annunciation and video assessment information is displayed concurrently in the central alarm station and the secondary alarm station, and the video image recording with real time playback capability can provide assessment of activities before and after each alarm annunciation within the perimeter barrier.

   b) The central and secondary alarm stations are located inside the protected area, and the interior of each alarm station is not visible from the perimeter of the protected area.

   c) The central and secondary alarm stations are designed and equipped such that, in the event of a single act, in accordance with the design basis threat of radiological sabotage, the design enables the survivability of equipment needed to maintain the functional capability of either alarm station to detect and assess alarms and communicate with onsite and offsite response personnel.

6. The vehicle barrier system is installed and located at the necessary stand-off distance to protect against the DBT vehicle bombs.

7. a) Vital equipment is located only within a vital area.
   b) Access to vital equipment requires passage through the vital area barrier.

8. Isolation zones and exterior areas within the protected area are provided with illumination to permit observation of abnormal presence or activity of persons or vehicles.

9. Emergency exits through the vital area boundaries are locked, alarmed, and equipped with a crash bar to allow for emergency egress.

10. Not used.

11. Not used.

12. Not used.

13. a) The central and secondary alarm stations have conventional (landline) telephone service with the main control room and local law enforcement authorities.

    b) The central and secondary alarm stations are capable of continuous communications with security personnel.

    c) Non-portable communication equipment in the central and secondary alarm stations remains operable from an independent power source in the event of loss of normal power.

14. Not used.

15. a) Security alarm devices including transmission lines to annunciators are tamper indicating and self-checking (e.g., an automatic indication is provided when failure of the alarm system or a component occurs, or when on standby power). Alarm annunciation shall indicate the type of alarm (e.g., intrusion alarms and emergency exit alarm) and location.

    b) Intrusion detection and assessment systems concurrently provide visual displays and audible annunciation of alarms in the central and secondary alarm station.

16. Equipment exists to record onsite security alarm annunciation, including the location of the alarm, false alarm, alarm check, and tamper indication; and the type of alarm, location, alarm circuit, date, and time.

Inspections, Tests, Analyses, and Acceptance Criteria

Table 2.6.9-1 specifies the inspections, tests, analyses, and associated acceptance criteria for the physical security system.

Table 2.6.9-1
Inspections, Tests, Analyses, and Acceptance Criteria

Design Commitment	Inspections, Tests, Analyses	Acceptance Criteria
1. The external walls, doors, ceiling, and floors in the main control room, the central alarm station, and the secondary alarm station are bullet-resistant to at least Underwriters Laboratory Ballistic Standard 752, level 4.	See Tier 1 Material, Table 3.3-6, item 14.	See Tier 1 Material, Table 3.3-6, item 14.
2. Not used.		
3. Secondary security power supply system for alarm annunciator equipment and non-portable communications equipment is located within the vital area.	See Tier 1 Material, Table 3.3-6, item 16.	See Tier 1 Material, Table 3.3-6, item 16.
4. Vital areas are locked and alarmed with active intrusion detection systems that annunciate in the central and secondary alarm stations upon intrusion into a vital area.	See Tier 1 Material, Table 3.3-6, item 17.	See Tier 1 Material, Table 3.3-6, item 17.
5.a) Security alarm annunciation and video assessment information is displayed concurrently in the central alarm station and the secondary alarm station, and the video image recording with real time playback capability can provide assessment of activities before and after each alarm annunciation within the perimeter area barrier.	Test, inspection, or a combination of test and inspections of the installed systems will be performed.	Security alarm annunciation and video assessment information is displayed concurrently in the central alarm station and the secondary alarm station, and the video image recording with real time playback capability provides assessment of activities before and after alarm annunciation within the perimeter barrier.
5.b) The central and secondary alarm stations are located inside the protected area, and the interior of each alarm station is not visible from the perimeter of the protected area.	Inspections of the central and secondary alarm stations will be performed.	The central and secondary alarm stations are located inside the protected area, and the interior of each alarm station is not visible from the perimeter of the protected area.

Table 2.6.9-1 (cont.)
Inspections, Tests, Analyses, and Acceptance Criteria

Design Commitment	Inspections, Tests, Analyses	Acceptance Criteria
5.c) The central and secondary alarm stations are designed and equipped such that, in the event of a single act, in accordance with the design basis threat of radiological sabotage, the design enables the survivability of equipment needed to maintain the functional capability of either alarm station to detect and assess alarms and communicate with onsite and offsite response personnel.	Inspections and/or analysis of the central and secondary alarm station will be performed.	The central and secondary alarm stations are designed and equipped such that, in the event of a single act, in accordance with the design basis threat of radiological sabotage, equipment needed to maintain the functional capability of either alarm station to detect and assess alarms and communicate with onsite and offsite response personnel exists.
6. The vehicle barrier system is installed and located at the necessary stand-off distance to protect against the DBT vehicle bombs.	Inspections and analysis will be performed for the vehicle barrier system .	The vehicle barrier system will protect against the DBT vehicle bombs based upon the stand-off distance of the system.
7.a) Vital equipment is located only within a vital area.	Inspection will be performed to confirm that vital equipment is located within a vital area.	All vital equipment is located only within a vital area.
7.b) Access to vital equipment requires passage through the vital area barrier.	Inspection will be performed to confirm that access to vital equipment requires passage through the vital area barrier.	Vital equipment is located within a protected area such that access to vital equipment requires passage through the vital area barrier.
8. Isolation zones and exterior areas within the protected area are provided with illumination to permit observation of abnormal presence or activity of persons or vehicles.	Inspection of the illumination in the isolation zones and external areas of the protected area will be performed.	The illumination in isolation zones and exterior areas within the protected area is 0.2 foot candles measured horizontally at ground level or, alternatively, sufficient to permit observation.
9. Emergency exits through the vital area boundaries are locked, alarmed, and equipped with a crash bar to allow for emergency egress.	Test, inspection, or a combination of tests and inspections of the emergency exits through the vital area boundaries will be performed.	The emergency exits through the vital area boundaries are locked, alarmed, and equipped with a crash bar to allow for emergency egress.
10. Not used.	.	
11. Not used.		
12. Not used.		

Table 2.6.9-1 (cont.)
Inspections, Tests, Analyses, and Acceptance Criteria

Design Commitment	Inspections, Tests, Analyses	Acceptance Criteria
13.a) The central and secondary alarm stations have conventional (landline) telephone service with the main control room and local law enforcement authorities.	Tests, inspections, or a combination of tests and inspections of the central and secondary alarm stations' conventional telephone services will be performed.	The central and secondary alarm stations are equipped with conventional (landline) telephone service with the main control room and local law enforcement authorities.
13.b) The central and secondary alarm stations are capable of continuous communication with security personnel.	Tests, inspections, or a combination of tests and inspections of the central and secondary alarm stations' continuous communication capabilities will be performed.	The central and secondary alarm stations are equipped with the capability to continuously communicate with security officers, watchmen, armed response individuals, or any security personnel that have responsibilities during a contingency event.
13.c) Non-portable communication equipment in the central and secondary alarm stations remains operable from an independent power source in the event of loss of normal power.	Tests, inspections, or a combination of tests and inspections of the non-portable communications equipment will be performed.	Non-portable communication devices (including conventional telephone systems) in the central and secondary alarm stations are wired to an independent power supply that enables the system to remain operable in the event of loss of normal power.
14. Not used.		
15.a) Security alarm devices, including transmission lines to annunciators, are tamper indicating and self-checking (e.g., an automatic indication is provided when failure of the alarm system or a component occurs, or when on standby power). Alarm annunciation shall indicate the type of alarm (e.g., intrusion alarms and emergency exit alarm) and location.	A test will be performed to verify that security alarms, including transmission lines to annunciators, are tamper indicating and self-checking (e.g., an automatic indication is provided when failure of the alarm system or a component occurs, or when on standby power) and that alarm annunciation indicates the type of alarm (e.g., intrusion alarms and emergency exit alarms) and location.	A report exists and concludes that security alarm devices, including transmission lines to annunciators, are tamper indicating and self-checking (e.g., an automatic indication is provided when failure of the alarm system or a component occurs, or when the system is on standby power) and that alarm annunciation indicates the type of alarm (e.g., intrusion alarms and emergency exit alarms) and location.

Table 2.6.9-1 (cont.)
Inspections, Tests, Analyses, and Acceptance Criteria

Design Commitment	Inspections, Tests, Analyses	Acceptance Criteria
15.b) Intrusion detection and assessment systems concurrently provide visual displays and audible annunciation of alarms in the central and secondary alarm stations.	Tests will be performed on intrusion detection and assessment equipment.	The intrusion detection system concurrently provides visual displays and audible annunciations of alarms in both the central and secondary alarm stations.
16. Equipment exists to record onsite security alarm annunciation, including the location of the alarm, false alarm, alarm check, and tamper indication; and the type of alarm, location, alarm circuit, date, and time.	Test, analysis, or a combination of test and analysis will be performed to ensure that equipment is capable of recording each onsite security alarm annunciation, including the location of the alarm, false alarm, alarm check, and tamper indication; and the type of alarm, location, alarm circuit, date, and time.	A report exists and concludes that equipment is capable of recording each onsite security alarm annunciation, including the location of the alarm, false alarm, alarm check, and tamper indication; and the type of alarm, location, alarm circuit, date, and time.

2.6.10 Main Generation System

No entry. Covered in Section 2.6.1, Main ac Power System.

2.6.11 Excitation and Voltage Regulation System

No entry for this system.