2.3 Auxiliary Systems

2.3.1 Component Cooling Water System

Design Description

The component cooling water system (CCS) removes heat from various plant components and transfers this heat to the service water system (SWS) during normal modes of plant operation including power generation, shutdown and refueling. The CCS has two pumps and two heat exchangers.

The CCS is as shown in Figure 2.3.1-1 and the CCS component locations are as shown in Table 2.3.1-3.

1. The functional arrangement of the CCS is as described in the Design Description of this Section 2.3.1.

2. The CCS preserves containment integrity by isolation of the CCS lines penetrating the containment.

3. The CCS provides the nonsafety-related functions of transferring heat from the normal residual heat removal system (RNS) during shutdown and the spent fuel pool cooling system during all modes of operation to the SWS.

4. Controls exist in the main control room (MCR) to cause the pumps identified in Table 2.3.1-1 to perform the listed functions.

5. Displays of the parameters identified in Table 2.3.1-1 can be retrieved in the MCR.

Inspections, Tests, Analyses, and Acceptance Criteria

Table 2.3.1-2 specifies the inspections, tests, analyses, and associated acceptance criteria for the CCS.

Table 2.3.1-1			
Equipment Name	**Tag No.**	**Display**	**Control Function**
CCS Pump A	CCS-MP-01A	Yes (Run Status)	Start
CCS Pump B	CCS-MP-01B	Yes (Run Status)	Start
CCS Discharge Header Flow Sensor	CCS-101	Yes	-
CCS to Normal Residual Heat Removal System Heat Exchanger (RNS HX) A Flow Sensor	CCS-301	Yes	-
CCS to RNS HX B Flow Sensor	CCS-302	Yes	-
CCS to Spent Fuel Pool Cooling System (SFS) HX A Flow Sensor	CCS-341	Yes	-
CCS to SFS HX B Flow Sensor	CCS-342	Yes	-
CCS Surge Tank Level Sensor A	CCS-130	Yes	-
CCS Surge Tank Level Sensor B	CCS-131	Yes	-
CCS Heat Exchanger Inlet Temperature Sensor	CCS-121	Yes	-
CCS Heat Exchanger Outlet Temperature Sensor	CCS-122	Yes	-
CCS Flow to Reactor Coolant Pump (RCP) 1A Valve (Position Indicator)	CCS-PL-V256A	Yes	-
CCS Flow to RCP 1B Valve (Position Indicator)	CCS-PL-V256B	Yes	-
CCS Flow to RCP 2A Valve (Position Indicator)	CCS-PL-V256C	Yes	-
CCS Flow to RCP 2B Valve (Position Indicator)	CCS-PL-V256D	Yes	-

Note: Dash (-) indicates not applicable.

Table 2.3.1-2

Inspections, Tests, Analyses, and Acceptance Criteria

Design Commitment	Inspections, Tests, Analyses	Acceptance Criteria
1. The functional arrangement of the CCS is as described in the Design Description of this Section 2.3.1.	Inspection of the as-built system will be performed.	The as-built CCS conforms with the functional arrangement described in the Design Description of this Section 2.3.1.
2. The CCS preserves containment integrity by isolation of the CCS lines penetrating the containment.	See Tier 1 Material, Table 2.2.1-3, items 1 and 7.	See Tier 1 Material, Table 2.2.1-3, items 1 and 7.
3. The CCS provides the nonsafety-related functions of transferring heat from the RNS during shutdown and the spent fuel pool cooling system during all modes of operation to the SWS.	i) Inspection will be performed for the existence of a report that determines the heat transfer capability of the CCS heat exchangers. ii) Testing will be performed to confirm that the CCS can provide cooling water to the RNS HXs while providing cooling water to the SFS HXs.	i) A report exists and concludes that the UA of each CCS heat exchanger is greater than or equal to 14.0 million Btu/hr-°F. ii) Each pump of the CCS can provide at least 2685 gpm of cooling water to one RNS HX and at least 1200 gpm of cooling water to one SFS HX while providing at least 4415 gpm to other users of cooling water.
4. Controls exist in the MCR to cause the pumps identified in Table 2.3.1-1 to perform the listed functions.	Testing will be performed to actuate the pumps identified in Table 2.3.1-1 using controls in the MCR.	Controls in the MCR operate to cause pumps listed in Table 2.3.1-1 to perform the listed functions.
5. Displays of the parameters identified in Table 2.3.1-1 can be retrieved in the MCR.	Inspection will be performed for retrievability of the parameters in the MCR.	Displays identified in Table 2.3.1-1 can be retrieved in the MCR.

Table 2.3.1-3		
Component Name	**Tag No.**	**Component Location**
CCS Pump A	CCS-MP-01A	Turbine Building
CCS Pump B	CCS-MP-01B	Turbine Building
CCS Heat Exchanger A	CCS-ME-01A	Turbine Building
CCS Heat Exchanger B	CCS-ME-01B	Turbine Building

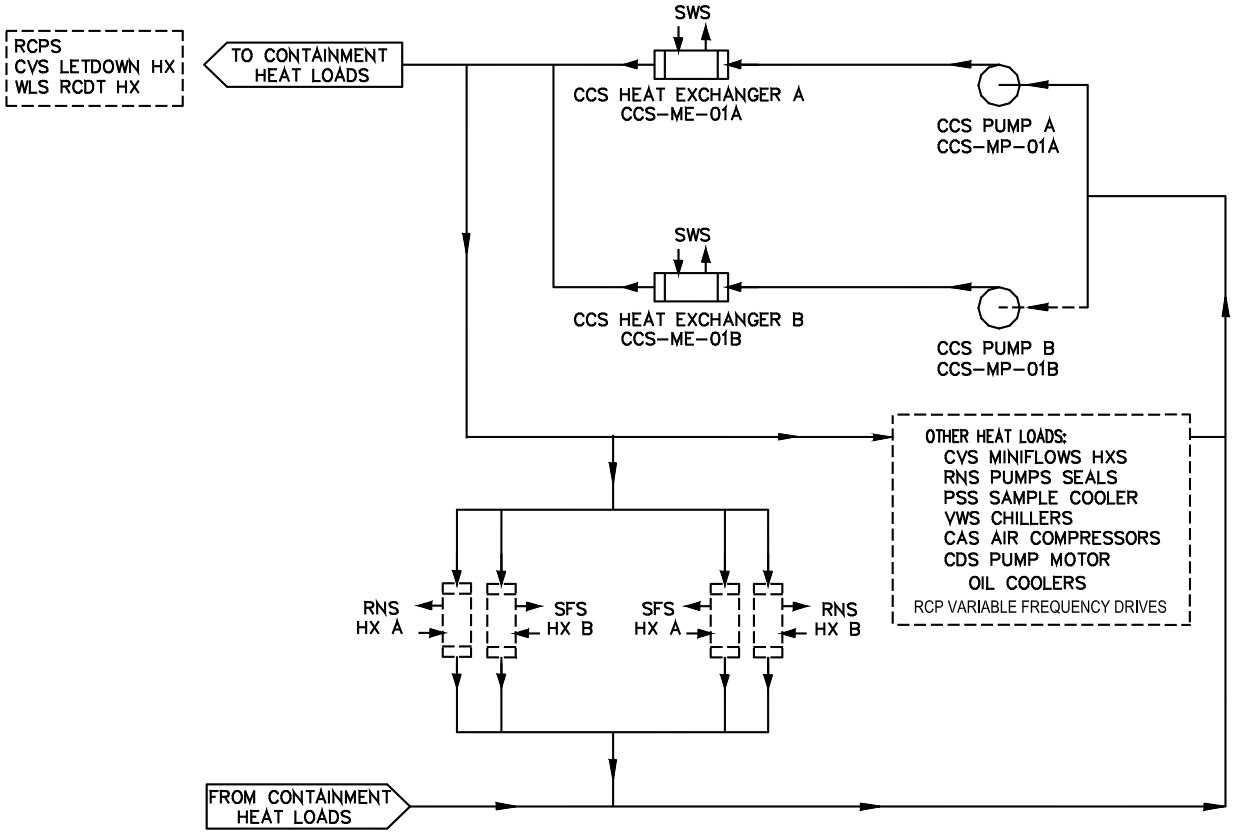

Figure 2.3.1-1
Component Cooling Water System

2.3.2 Chemical and Volume Control System

Design Description

The chemical and volume control system (CVS) provides reactor coolant system (RCS) purification, RCS inventory control and makeup, chemical shim and chemical control, oxygen control, and auxiliary pressurizer spray. The CVS performs these functions during normal modes of operation including power generation and shutdown.

The CVS is as shown in Figure 2.3.2-1 and the component locations of the CVS are as shown in Table 2.3.2-5.

1. The functional arrangement of the CVS is as described in the Design Description of this Section 2.3.2.

2. a) The components identified in Table 2.3.2-1 as ASME Code Section III are designed and constructed in accordance with ASME Code Section III requirements.

   b) The piping identified in Table 2.3.2-2 as ASME Code Section III is designed and constructed in accordance with ASME Code Section III requirements.

3. a) Pressure boundary welds in components identified in Table 2.3.2-1 as ASME Code Section III meet ASME Code Section III requirements.

   b) Pressure boundary welds in piping identified in Table 2.3.2-2 as ASME Code Section III meet ASME Code Section III requirements.

4. a) The components identified in Table 2.3.2-1 as ASME Code Section III retain their pressure boundary integrity at their design pressure.

   b) The piping identified in Table 2.3.2-2 as ASME Code Section III retains its pressure boundary integrity at its design pressure.

5. The seismic Category I equipment identified in Table 2.3.2-1 can withstand seismic design basis loads without loss of safety function.

6. a) The Class 1E equipment identified in Table 2.3.2-1 as being qualified for a harsh environment can withstand the environmental conditions that would exist before, during, and following a design basis accident without loss of safety function for the time required to perform the safety function.

   b) The Class 1E components identified in Table 2.3.2-1 are powered from their respective Class 1E division.

   c) Separation is provided between CVS Class 1E divisions, and between Class 1E divisions and non-Class 1E cable.

7. The CVS provides the following safety-related functions:

   a) The CVS preserves containment integrity by isolation of the CVS lines penetrating the containment.

   b) The CVS provides termination of an inadvertent RCS boron dilution by isolating demineralized water from the RCS.

   c) The CVS provides isolation of makeup to the RCS.

8. The CVS provides the following nonsafety-related functions:

   a) The CVS provides makeup water to the RCS.

   b) The CVS provides the pressurizer auxiliary spray.

9. Safety-related displays in Table 2.3.2-1 can be retrieved in the main control room (MCR).

10. a) Controls exist in the MCR to cause the remotely operated valves identified in Table 2.3.2-1 to perform active functions.

    b) The valves identified in Table 2.3.2-1 as having protection and safety monitoring system (PMS) control perform an active safety function after receiving a signal from the PMS.

11. a) The motor-operated and check valves identified in Table 2.3.2-1 perform an active safety-related function to change position as indicated in the table.

    b) After a loss of motive power, the remotely operated valves identified in Table 2.3.2-1 assume the indicated loss of motive power position.

12. a) Controls exist in the MCR to cause the pumps identified in Table 2.3.2-3 to perform the listed function.

    b) The pumps identified in Table 2.3.2-3 start after receiving a signal from the PLS.

13. Displays of the parameters identified in Table 2.3.2-3 can be retrieved in the MCR.

14. The nonsafety-related piping located inside containment and designated as reactor coolant pressure boundary, as identified in Table 2.3.2-2 (pipe lines with "No" in the ASME Code column), has been designed to withstand a seismic design basis event and maintain structural integrity.

Inspections, Tests, Analyses, and Acceptance Criteria

Table 2.3.2-4 specifies the inspections, tests, analyses, and associated acceptance criteria for the CVS.

Table 2.3.2-1

Equipment Name	Tag No.	ASME Code Section III	Seismic Cat. I	Remotely Operated Valve	Class 1E/ Qual. for Harsh Envir.	Safety-Related Display	Control PMS	Active Function	Loss of Motive Power Position
RCS Purification Motor-operated Isolation Valve	CVS-PL-V001	Yes	Yes	Yes	Yes/Yes	Yes (Valve Position)	Yes	Transfer Closed	As Is
RCS Purification Motor-operated Isolation Valve	CVS-PL-V002	Yes	Yes	Yes	Yes/Yes	Yes (Valve Position)	Yes	Transfer Closed	As Is
RCS Purification Motor-operated Isolation Valve	CVS-PL-V003	Yes	Yes	Yes	Yes/Yes	Yes (Valve Position)	Yes	Transfer Closed	As Is
CVS Resin Flush Line Containment Isolation Valve	CVS-PL-V040	Yes	Yes	No	- / -	-	-	-	-
CVS Resin Flush Line Containment Isolation Valve	CVS-PL-V041	Yes	Yes	No	- / -	-	-	-	-
CVS Demineralizer Resin Flush Line Containment Isolation Thermal Relief Valve	CVS-PL-V042	Yes	Yes	No	- / -	-	-	Transfer Open/ Transfer Closed	-
CVS Letdown Containment Isolation Valve	CVS-PL-V045	Yes	Yes	Yes	Yes/Yes	Yes (Valve Position)	Yes	Transfer Closed	Closed
CVS Letdown Containment Isolation Valve	CVS-PL-V047	Yes	Yes	Yes	Yes/No	Yes (Valve Position)	Yes	Transfer Closed	Closed

Note: Dash (-) indicates not applicable.

Table 2.3.2-1 (cont.)

Equipment Name	Tag No.	ASME Code Section III	Seismic Cat. I	Remotely Operated Valve	Class 1E/ Qual. for Harsh Envir.	Safety-Related Display	Control PMS	Active Function	Loss of Motive Power Position
CVS Letdown Line Containment Isolation Thermal Relief Valve	CVS-PL-V058	Yes	Yes	No	- / -	-	-	Transfer Open/ Transfer Closed	-
CVS Purification Return Line Pressure Boundary Check Valve	CVS-PL-V080	Yes	Yes	No	- / -	-	-	Transfer Closed	-
CVS Purification Return Line Pressure Boundary Isolation Check Valve	CVS-PL-V081	Yes	Yes	No	- / -	No	-	Transfer Closed	-
CVS Purification Return Line Pressure Boundary Check Valve	CVS-PL-V082	Yes	Yes	No	- / -	-	-	Transfer Closed	-
CVS Auxiliary Pressurizer Spray Line Pressure Boundary Valve	CVS-PL-V084	Yes	Yes	Yes	Yes/Yes	Yes (Valve Position)	Yes	Transfer Closed	Closed
CVS Auxiliary Pressurizer Spray Line Pressure Boundary Check Valve	CVS-PL-V085	Yes	Yes	No	Yes/Yes	-	-	Transfer Closed	-
CVS Makeup Line Containment Isolation Motor-operated Valve	CVS-PL-V090	Yes	Yes	Yes	Yes/No	Yes (Valve Position)	Yes	Transfer Closed	As Is

Note: Dash (-) indicates not applicable.

Table 2.3.2-1 (cont.)

Equipment Name	Tag No.	ASME Code Section III	Seismic Cat. I	Remotely Operated Valve	Class 1E/ Qual. for Harsh Envir.	Safety-Related Display	Control PMS	Active Function	Loss of Motive Power Position
CVS Makeup Line Containment Isolation Motor-operated Valve	CVS-PL-V091	Yes	Yes	Yes	Yes/Yes	Yes (Valve Position)	Yes	Transfer Closed	As Is
CVS Hydrogen Addition Line Containment Isolation Valve	CVS-PL-V092	Yes	Yes	Yes	Yes/No	Yes (Valve Position)	Yes	Transfer Closed	Closed
CVS Hydrogen Addition Line Containment Isolation Check Valve	CVS-PL-V094	Yes	Yes	No	- / -	-	-	Transfer Closed	-
CVS Makeup Line Containment Isolation Thermal Relief Valve	CVS-PL-V100	Yes	Yes	No	- / -	-	-	Transfer Open/ Transfer Closed	-
CVS Demineralized Water Isolation Valve	CVS-PL-V136A	Yes	Yes	Yes	Yes/No	Yes (Valve Position)	Yes	Transfer Closed	Closed
CVS Demineralized Water Isolation Valve	CVS-PL-V136B	Yes	Yes	Yes	Yes/No	Yes (Valve Position)	Yes	Transfer Closed	Closed

Note: Dash (-) indicates not applicable.

Table 2.3.2-2		
Line Name	**Line Number**	**ASME Code Section III**
CVS Purification Line	L001 L040	Yes Yes
CVS Resin Flush Containment Penetration Line	L026	Yes
CVS Purification Line Return	L038	Yes
CVS Pressurizer Auxiliary Spray Connection	L070 L071	Yes Yes
CVS Letdown Containment Penetration Line	L051	Yes
CVS Makeup Containment Penetration Line	L053	Yes
CVS Hydrogen Addition Containment Penetration Line	L061	Yes
CVS Supply Line to Regenerative Heat Exchanger	L002	No
CVS Return Line from Regenerative Heat Exchanger	L018 L036 L073	No Yes No
CVS Line from Regenerative Heat Exchanger to Letdown Heat Exchanger	L003	No
CVS Lines from Letdown Heat Exchanger to Demin. Tanks	L004 L005 L072	No No No
CVS Lines from Demin Tanks to RC Filters and Connected Lines	L006(1) L007(1) L010(1) L011(1) L012 L015(1) L016(1) L020 L021 L022 L023(1) L024(1) L029 L037	No No No No No No No No No No No No No No

Table 2.3.2-2 (cont.)		
Line Name	**Line Number**	**ASME Code Section III**
CVS Lines from RC Filters to Regenerative Heat Exchanger	L030 L031 L034 L050	No No No No
CVS Resin Fill Lines to Demin. Tanks	L008(1) L013(1) L025(1)	No No No

Note:

1. Special seismic requirements include only the portion of piping normally exposed to RCS pressure. Piping beyond the first normally closed isolation valve is evaluated as seismic Category II piping extending to either an interface anchor, a rigid support following a six-way anchor, or the last seismic support of a rigidly supported region of the piping system as necessary to satisfy analysis requirements for piping connected to seismic Category I piping systems.

Table 2.3.2-3			
Equipment	**Tag No.**	**Display**	**Control Function**
CVS Makeup Pump A	CVS-MP-01A	Yes (Run Status)	Start
CVS Makeup Pump B	CVS-MP-01B	Yes (Run Status)	Start
Purification Flow Sensor	CVS-001	Yes	-
Purification Return Flow Sensor	CVS-025	Yes	-
CVS Purification Return Line (Position Indicator)	CVS-PL-V081	Yes	-
Auxiliary Spray Line Isolation Valve (Position Indicator)	CVS-PL-V084	Yes	-
Boric Acid Storage Tank Level Sensor	CVS-109	Yes	-
Boric Acid Flow Sensor	CVS-115	Yes	-
Makeup Blend Valve (Position Indicator)	CVS-PL-V115	Yes	-
CVS Demineralized Water Isolation Valve (Position Indicator)	CVS-PL-136A	Yes	-
CVS Demineralized Water Isolation Valve (Position Indicator)	CVS-PL-136B	Yes	-
Makeup Pump Discharge Flow Sensor	CVS-157	Yes	-
Makeup Flow Control Valve (Position Indicator)	CVS-PL-V157	Yes	-

Note: Dash (-) indicates not applicable.

Table 2.3.2-4
Inspections, Tests, Analyses, and Acceptance Criteria

Design Commitment	Inspections, Tests, Analyses	Acceptance Criteria
1. The functional arrangement of the CVS is as described in the Design Description of this Section 2.3.2.	Inspection of the as-built system will be performed.	The as-built CVS conforms with the functional arrangement as described in the Design Description of this Section 2.3.2.
2.a) The components identified in Table 2.3.2-1 as ASME Code Section III are designed and constructed in accordance with ASME Code Section III requirements.	Inspection will be conducted of the as-built components as documented in the ASME design reports.	The ASME Code Section III design reports exist for the as-built components identified in Table 2.3.2-1 as ASME Code Section III.
2.b) The piping identified in Table 2.3.2-2 as ASME Code Section III is designed and constructed in accordance with ASME Code Section III requirements.	Inspection will be conducted of the as-built piping as documented in the ASME design reports.	The ASME Code Section III design reports exist for the as-built piping identified in Table 2.3.2-2 as ASME Code Section III.
3.a) Pressure boundary welds in components identified in Table 2.3.2-1 as ASME Code Section III meet ASME Code Section III requirements.	Inspection of the as-built pressure boundary welds will be performed in accordance with the ASME Code Section III.	A report exists and concludes that the ASME Code Section III requirements are met for non-destructive examination of pressure boundary welds.
3.b) Pressure boundary welds in piping identified in Table 2.3.2-2 as ASME Code Section III meet ASME Code Section III requirements.	Inspection of the as-built pressure boundary welds will be performed in accordance with the ASME Code Section III.	A report exists and concludes that the ASME Code Section III requirements are met for non-destructive examination of pressure boundary welds.
4.a) The components identified in Table 2.3.2-1 as ASME Code Section III retain their pressure boundary integrity at their design pressure.	A hydrostatic test will be performed on the components required by the ASME Code Section III to be hydrostatically tested.	A report exists and concludes that the results of the hydrostatic test of the components identified in Table 2.3.2-1 as ASME Code Section III conform with the requirements of the ASME Code Section III.

Table 2.3.2-4 (cont.)
Inspections, Tests, Analyses, and Acceptance Criteria

Design Commitment	Inspections, Tests, Analyses	Acceptance Criteria
4.b) The piping identified in Table 2.3.2-2 as ASME Code Section III retains its pressure boundary integrity at its design pressure.	A hydrostatic test will be performed on the piping required by the ASME Code Section III to be hydrostatically tested.	A report exists and concludes that the results of the hydrostatic test of the piping identified in Table 2.3.2-2 as ASME Code Section III conform with the requirements of the ASME Code Section III.
5. The seismic Category I equipment identified in Table 2.3.2-1 can withstand seismic design basis loads without loss of safety function.	i) Inspection will be performed to verify that the seismic Category I equipment identified in Table 2.3.2-1 is located on the Nuclear Island.	i) The seismic Category I equipment identified in Table 2.3.2-1 is located on the Nuclear Island.
	ii) Type tests, analyses, or a combination of type tests and analyses of seismic Category I equipment will be performed.	ii) A report exists and concludes that the seismic Category I equipment can withstand seismic design basis dynamic loads without loss of safety function.
	iii) Inspection will be performed for the existence of a report verifying that the as-built equipment including anchorage is seismically bounded by the tested or analyzed conditions.	iii) A report exists and concludes that the as-built equipment including anchorage is seismically bounded by the tested or analyzed conditions.
6.a) The Class 1E equipment identified in Table 2.3.2-1 as being qualified for a harsh environment can withstand the environmental conditions that would exist before, during, and following a design basis accident without loss of safety function for the time required to perform the safety function.	i) Type tests, analyses, or a combination of type tests and analyses will be performed on Class 1E equipment located in a harsh environment.	i) A report exists and concludes that the Class 1E equipment identified in Table 2.3.2-1 as being qualified for a harsh environment can withstand the environmental conditions that would exist before, during, and following a design basis accident without loss of safety function for the time required to perform the safety function.
	ii) Inspection will be performed of the as-built Class 1E equipment and the associated wiring, cables, and terminations located in a harsh environment.	ii) A report exists and concludes that the as-built Class 1E equipment and the associated wiring, cables, and terminations identified in Table 2.3.2-1 as being qualified for a harsh environment are bounded by type tests, analyses, or a combination of type tests and analyses.

Table 2.3.2-4 (cont.)
Inspections, Tests, Analyses, and Acceptance Criteria

Design Commitment	Inspections, Tests, Analyses	Acceptance Criteria
6.b) The Class 1E components identified in Table 2.3.2-1 are powered from their respective Class 1E division.	Testing will be performed on the CVS by providing a simulated test signal in each Class 1E division.	A simulated test signal exists at the Class 1E equipment identified in Table 2.3.2-1 when the assigned Class 1E division is provided the test signal.
6.c) Separation is provided between CVS Class 1E divisions, and between Class 1E divisions and non-Class 1E cable.	See Tier 1 Material, Table 3.3-6, item 7.d.	See Tier 1 Material, Table 3.3-6, item 7.d.
7.a) The CVS preserves containment integrity by isolation of the CVS lines penetrating the containment.	See Tier 1 Material, Table 2.2.1-3, item 7.	See Tier 1 Material, Table 2.2.1-3, item 7.
7.b) The CVS provides termination of an inadvertent RCS boron dilution by isolating demineralized water from the RCS.	See item 10b in this table.	See item 10b in this table.
7.c) The CVS provides isolation of makeup to the RCS.	See item 10b in this table.	See item 10b in this table.
8.a) The CVS provides makeup water to the RCS.	i) Testing will be performed by aligning a flow path from each CVS makeup pump, actuating makeup flow to the RCS at pressure greater than or equal to 2000 psia, and measuring the flow rate in the makeup pump discharge line with each pump suction aligned to the boric acid storage tank. ii) Inspection of the boric acid storage tank volume will be performed. iii) Testing will be performed to measure the delivery rate from the DWS to the RCS. Both CVS makeup pumps will be operating and the RCS pressure will be below 6 psig.	i) Each CVS makeup pump provides a flow rate of greater than or equal to 100 gpm. ii) The volume in the boric acid storage tank is at least 70,000 gallons between the tank outlet connection and the tank overflow. iii) The total CVS makeup flow to the RCS is less than or equal to 200 gpm.

Table 2.3.2-4 (cont.)
Inspections, Tests, Analyses, and Acceptance Criteria

Design Commitment	Inspections, Tests, Analyses	Acceptance Criteria
8.b) The CVS provides the pressurizer auxiliary spray.	Testing will be performed by aligning a flow path from each CVS makeup pump to the pressurizer auxiliary spray and measuring the flow rate in the makeup pump discharge line with each pump suction aligned to the boric acid storage tank and with RCS pressure greater than or equal to 2000 psia.	Each CVS makeup pump provides spray flow to the pressurizer.
9. Safety-related displays identified in Table 2.3.2-1 can be retrieved in the MCR.	Inspection will be performed for retrievability of the safety-related displays in the MCR.	Safety-related displays identified in Table 2.3.2-1 can be retrieved in the MCR.
10.a) Controls exist in the MCR to cause the remotely operated valves identified in Table 2.3.2-1 to perform active functions.	Stroke testing will be performed on the remotely operated valves identified in Table 2.3.2-1 using the controls in the MCR.	Controls in the MCR operate to cause the remotely operated valves identified in Table 2.3.2-1 to perform active functions.
10.b) The valves identified in Table 2.3.2-1 as having PMS control perform an active safety function after receiving a signal from the PMS.	i) Testing will be performed using real or simulated signals into the PMS. ii) Testing will be performed to demonstrate that the remotely operated CVS isolation valves CVS-V090, V091, V136A/B close within the required response time.	i) The valves identified in Table 2.3.2-1 as having PMS control perform the active function identified in the table after receiving a signal from the PMS. ii) These valves close within the following times after receipt of an actuation signal: V090, V091 < 30 sec V136A/B < 20 sec
11.a) The motor-operated and check valves identified in Table 2.3.2-1 perform an active safety-related function to change position as indicated in the table.	i) Tests or type tests of motor-operated valves will be performed that demonstrate the capability of the valve to operate under its design conditions. ii) Inspection will be performed for the existence of a report verifying that the as-built motor-operated valves are bounded by the tested conditions.	i) A test report exists and concludes that each motor-operated valve changes position as indicated in Table 2.3.2-1 under design conditions. ii) A report exists and concludes that the as-built motor-operated valves are bounded by the tests or type tests.

Table 2.3.2-4 (cont.)
Inspections, Tests, Analyses, and Acceptance Criteria

Design Commitment	Inspections, Tests, Analyses	Acceptance Criteria
	iii) Tests of the motor-operated valves will be performed under pre-operational flow, differential pressure, and temperature conditions. iv) Exercise testing of the check valves with active safety functions identified in Table 2.3.2-1 will be performed under pre-operational test pressure, temperature and fluid flow conditions.	iii) Each motor-operated valve changes position as indicated in Table 2.3.2-1 under pre-operational test conditions. iv) Each check valve changes position as indicated in Table 2.3.2-1.
11.b) After loss of motive power, the remotely operated valves identified in Table 2.3.2-1 assume the indicated loss of motive power position.	Testing of the remotely operated valves will be performed under the conditions of loss of motive power.	Upon loss of motive power, each remotely operated valve identified in Table 2.3.2-1 assumes the indicated loss of motive power position.
12.a) Controls exist in the MCR to cause the pumps identified in Table 2.3.2-3 to perform the listed function.	Testing will be performed to actuate the pumps identified in Table 2.3.2-3 using controls in the MCR.	Controls in the MCR cause pumps identified in Table 2.3.2-3 to perform the listed function.
12.b) The pumps identified in Table 2.3.2-3 start after receiving a signal from the PLS.	Testing will be performed to confirm starting of the pumps identified in Table 2.3.2-3.	The pumps identified in Table 2.3.2-3 start after a signal is generated by the PLS.
13. Displays of the parameters identified in Table 2.3.2-3 can be retrieved in the MCR.	Inspection will be performed for retrievability of the displays identified in Table 2.3.2-3 in the MCR.	Displays identified in Table 2.3.2-3 can be retrieved in the MCR.
14. The nonsafety-related piping located inside containment and designated as reactor coolant pressure boundary, as identified in Table 2.3.2-2, has been designed to withstand a seismic design basis event and maintain structural integrity.	Inspection will be conducted of the as-built components as documented in the CVS Seismic Analysis Report.	The CVS Seismic Analysis Reports exist for the non-safety related piping located inside containment and designated as reactor coolant pressure boundary as identified in Table 2.3.2-2.

Table 2.3.2-5		
Component Name	**Tag No.**	**Component Location**
CVS Makeup Pump A	CVS-MP-01A	Auxiliary Building
CVS Makeup Pump B	CVS-MP-01B	Auxiliary Building
Boric Acid Storage Tank	CVS-MT-01	Yard
Regenerative Heat Exchanger	CVS-ME-01	Containment
Letdown Heat Exchanger	CVS-ME-02	Containment
Mixed Bed Demineralizer A	CVS-MV-01A	Containment
Mixed Bed Demineralizer B	CVS-MV-01B	Containment
Cation Bed Demineralizer	CVS-MV-02	Containment
Reactor Coolant Filter A	CVS-MV-03A	Containment
Reactor Coolant Filter B	CVS-MV-03B	Containment

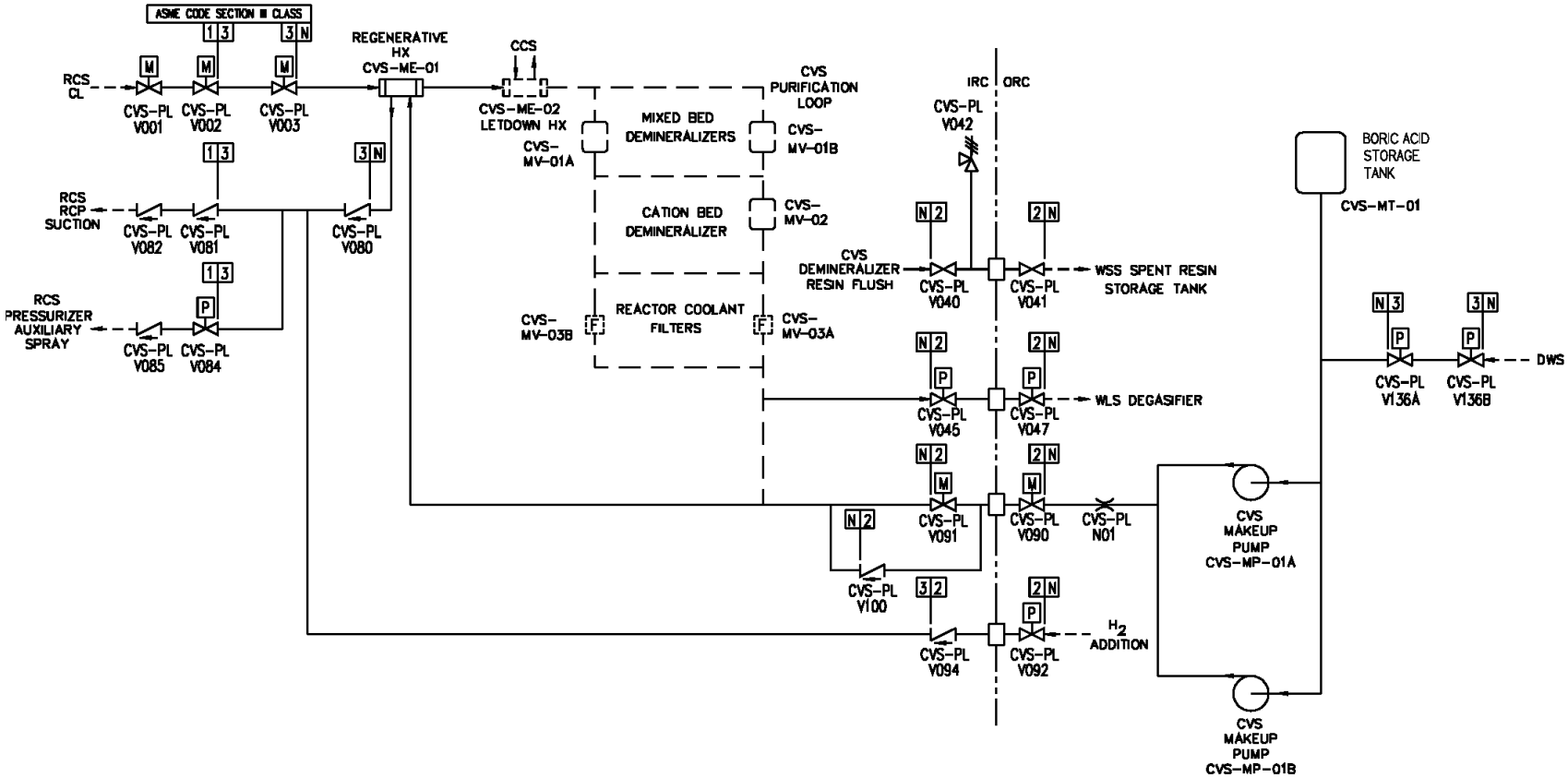

Figure 2.3.2-1
Chemical and Volume Control System

2.3.3 Standby Diesel Fuel Oil System

Design Description

The standby diesel fuel oil system (DOS) supplies diesel fuel oil for the onsite standby power system. The diesel fuel oil is supplied by two above-ground fuel oil storage tanks. The DOS also provides fuel oil for the ancillary diesel generators. A single fuel oil storage tank services both ancillary diesel generators.

The DOS is as shown in Figure 2.3.3-1 and the component locations of the DOS are as shown in Table 2.3.3-3.

1. The functional arrangement of the DOS is as described in the Design Description of this Section 2.3.3.

2. The ancillary diesel generator fuel tank can withstand a seismic event.

3. The DOS provides the following nonsafety-related functions:

   a) Each fuel oil storage tank provides for at least 7 days of continuous operation of the associated standby diesel generator.

   b) Each fuel oil day tank provides for at least four hours of continuous operation of the associated standby diesel engine generator.

   c) The fuel oil flow rate to the day tank of each standby diesel generator provides for continuous operation of the associated diesel generator.

   d) The ancillary diesel generator fuel tank is sized to supply power to long-term safety-related post-accident monitoring loads and control room lighting through a regulating transformer and one PCS recirculation pump for a period of 4 days.

4. Controls exist in the main control room (MCR) to cause the components identified in Table 2.3.3-1 to perform the listed function.

5. Displays of the parameters identified in Table 2.3.3-1 can be retrieved in the MCR.

Inspections, Tests, Analyses, and Acceptance Criteria

Table 2.3.3-2 specifies the inspections, tests, analyses, and associated acceptance criteria for the DOS.

Table 2.3.3-1			
Equipment Name	**Tag No.**	**Display**	**Control Function**
Diesel Fuel Oil Pump 1A (Motor)	DOS-MP-01A	Yes (Run Status)	Start
Diesel Fuel Oil Pump 1B (Motor)	DOS-MP-01B	Yes (Run Status)	Start
Diesel Generator Fuel Oil Day Tank A Level	DOS-016A	Yes	-
Diesel Generator Fuel Oil Day Tank B Level	DOS-016B	Yes	-

Note: Dash (-) indicates not applicable.

Table 2.3.3-2
Inspections, Tests, Analyses, and Acceptance Criteria

Design Commitment	Inspections, Tests, Analyses	Acceptance Criteria
1. The functional arrangement of the DOS is as described in the Design Description of this Section 2.3.3.	Inspection of the as-built system will be performed.	The as-built DOS conforms with the functional arrangement described in the Design Description of this Section 2.3.3.
2. The ancillary diesel generator fuel tank can withstand a seismic event.	Inspection will be performed for the existence of a report verifying that the as-built ancillary diesel generator fuel tank and its anchorage are designed using seismic Category II methods and criteria.	A report exists and concludes that the as-built ancillary diesel generator fuel tank and its anchorage are designed using seismic Category II methods and criteria.
3.a) Each fuel oil storage tank provides for at least 7 days of continuous operation of the associated standby diesel generator.	Inspection of each fuel oil storage tank will be performed.	The volume of each fuel oil storage tank available to the standby diesel generator is greater than or equal to 55,000 gallons.
3.b) Each fuel oil storage day tank provides for at least 4 hours of operation of the associated standby diesel generator.	Inspection of the fuel oil day tank will be performed.	The volume of each fuel oil day tank is greater than or equal to 1300 gallons.
3.c) The fuel oil flow rate to the day tank of each standby diesel generator provides for continuous operation of the associated diesel generator.	Testing will be performed to determine the flow rate.	The flow rate delivered to each day tank is 8 gpm or greater.
3.d) The ancillary diesel generator fuel tank is sized to supply power to long-term safety-related post accident monitoring loads and control room lighting through a regulating transformer and one PCS recirculation pump for four days.	Inspection of the ancillary diesel generator fuel tank will be performed.	The volume of the ancillary diesel generator fuel tank is greater than or equal to 650 gallons.
4. Controls exist in the MCR to cause the components identified in Table 2.3.3-1 to perform the listed function.	Testing will be performed on the components in Table 2.3.3-1 using controls in the MCR.	Controls in the MCR operate to cause the components listed in Table 2.3.3-1 to perform the listed functions.
5. Displays of the parameters identified in Table 2.3.3-1 can be retrieved in the MCR.	Inspection will be performed for retrievability of parameters in the MCR.	The displays identified in Table 2.3.3-1 can be retrieved in the MCR.

Table 2.3.3-3		
Component Name	**Tag No.**	**Component Location**
Diesel Oil Transfer Package A	DOS-MS-01A	Yard
Diesel Oil Transfer Package B	DOS-MS-01B	Yard
Fuel Oil Storage Tank A	DOS-MT-01A	Yard
Fuel Oil Storage Tank B	DOS-MT-01B	Yard
Diesel Generator A Fuel Oil Day Tank	DOS-MT-02A	Diesel Building
Diesel Generator B Fuel Oil Day Tank	DOS-MT-02B	Diesel Building
Ancillary Diesel Fuel Oil Storage Tank	DOS-MT-03	Annex Building

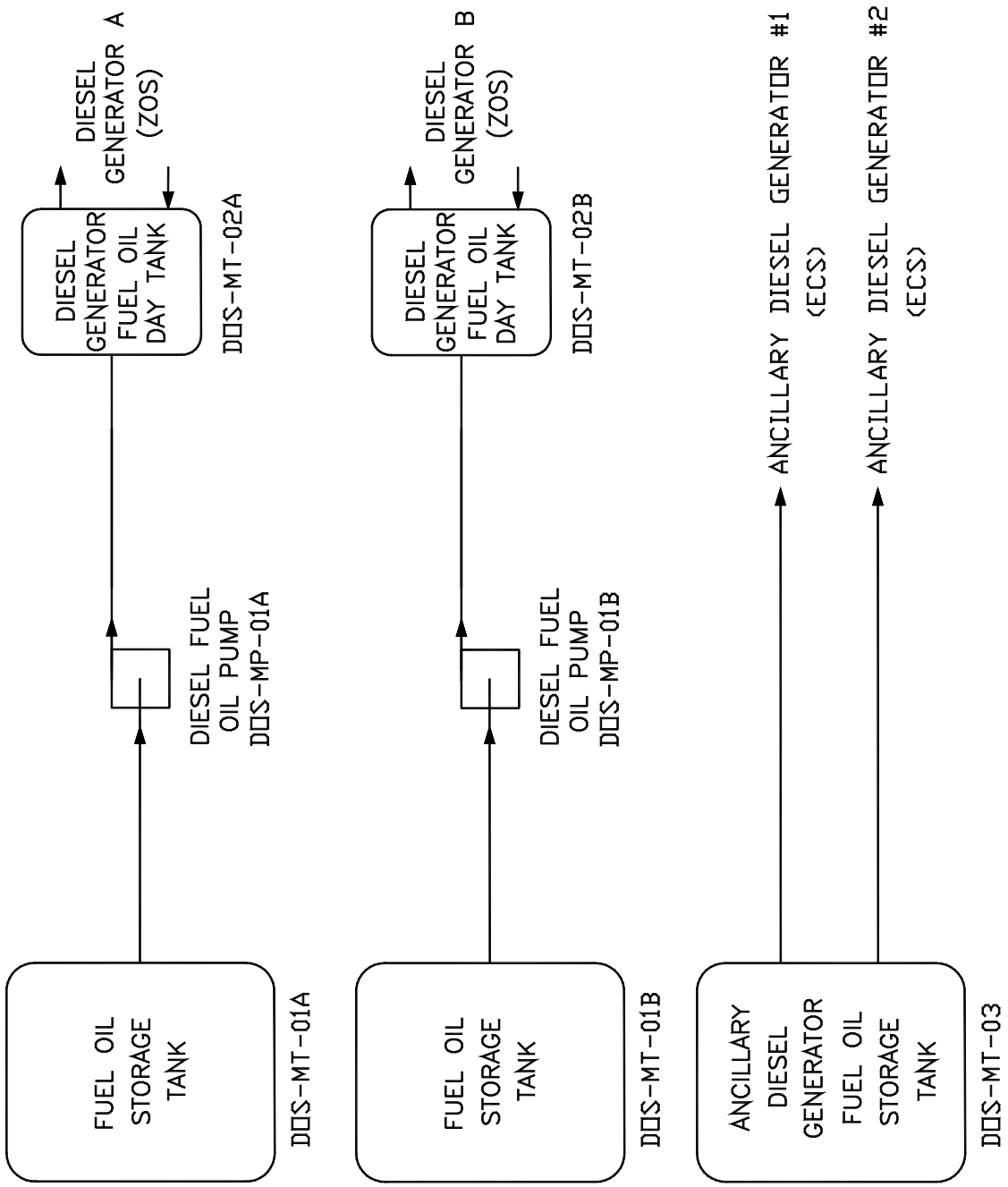

Figure 2.3.3-1
Standby Diesel Fuel Oil System

2.3.4 Fire Protection System

Design Description

The fire protection system (FPS) detects and suppresses fires in the plant. The FPS consists of water distribution systems, automatic and manual suppression systems, a fire detection and alarm system, and portable fire extinguishers. The FPS provides fire protection for the nuclear island, the annex building, the turbine building, the radwaste building and the diesel generator building.

The FPS is as shown in Figure 2.3.4-1 and the component locations of the FPS are as shown in Table 2.3.4-3.

1. The functional arrangement of the FPS is as described in the Design Description of this Section 2.3.4.

2. The FPS piping identified in Table 2.3.4-4 remains functional following a safe shutdown earthquake.

3. The FPS provides the safety-related function of preserving containment integrity by isolation of the FPS line penetrating the containment.

4. The FPS provides for manual fire fighting capability in plant areas containing safety-related equipment.

5. Displays of the parameters identified in Table 2.3.4-1 can be retrieved in the main control room (MCR).

6. The FPS provides nonsafety-related containment spray for severe accident management.

7. The FPS provides two fire water storage tanks, each capable of holding at least 300,000 gallons of water.

8. Two FPS fire pumps provide at least 2000 gpm each at a total head of at least 300 ft.

9. The fuel tank for the diesel-driven fire pump is capable of holding at least 240 gallons.

10. Individual fire detectors provide fire detection capability and can be used to initiate fire alarms in areas containing safety-related equipment.

11. The FPS seismic standpipe subsystem can be supplied from the FPS fire main by opening the normally closed cross-connect valve to the FPS plant fire main.

Inspections, Tests, Analyses, and Acceptance Criteria

Table 2.3.4-2 specifies the inspections, tests, analyses, and associated acceptance criteria for the FPS.

Table 2.3.4-1			
Equipment Name	**Tag No.**	**Display**	**Control Function**
Motor-driven Fire Pump	FPS-MP-01A	Yes (Run Status)	Start
Diesel-driven Fire Pump	FPS-MP-01B	Yes (Run Status)	Start
Jockey Pump	FPS-MP-02	Yes (Run Status)	Start

Table 2.3.4-2
Inspections, Tests, Analyses, and Acceptance Criteria

Design Commitment	Inspections, Tests, Analyses	Acceptance Criteria
1. The functional arrangement of the FPS is as described in the Design Description of this Section 2.3.4.	Inspection of the as-built system will be performed.	The as-built FPS conforms with the functional arrangement described in the Design Description of this Section 2.3.4.
2. The FPS piping identified in Table 2.3.4-4 remains functional following a safe shutdown earthquake.	i) Inspection will be performed to verify that the piping identified in Table 2.3.4-4 is located on the Nuclear Island. ii) A reconciliation analysis using the as-designed and as-built piping information will be performed, or an analysis of the as-built piping will be performed.	i) The piping identified in Table 2.3.4-4 is located on the Nuclear Island. ii) The as-built piping stress report exists and concludes that the piping remains functional following a safe shutdown earthquake.
3. The FPS provides the safety-related function of preserving containment integrity by isolation of the FPS line penetrating the containment.	See Tier 1 Material, Table 2.2.1-3, items 1 and 7.	See Tier 1 Material, Table 2.2.1-3, items 1 and 7.
4. The FPS provides for manual fire fighting capability in plant areas containing safety-related equipment.	i) Inspection of the passive containment cooling system (PCS) storage tank will be performed. ii) Testing will be performed by measuring the water flow rate as it is simultaneously discharged from the two highest fire-hose stations and when the water for the fire is supplied from the PCS storage tank.	i) The volume of the PCS tank above the standpipe feeding the FPS and below the overflow is at least 18,000 gal. ii) Water is simultaneously discharged from each of the two highest fire-hose stations in plant areas containing safety-related equipment at not less than 75 gpm.

Table 2.3.4-2 (cont.)
Inspections, Tests, Analyses, and Acceptance Criteria

Design Commitment	Inspections, Tests, Analyses	Acceptance Criteria
5. Displays of the parameters identified in Table 2.3.4-1 can be retrieved in the MCR.	Inspection will be performed for retrievability of the parameters in the MCR.	The displays identified in Table 2.3.4-1 can be retrieved in the MCR.
6. The FPS provides nonsafety-related containment spray for severe accident management.	Inspection of the containment spray headers will be performed.	The FPS has spray headers and nozzles as follows: At least 44 nozzles at plant elevation of at least 260 feet, and 24 nozzles at plant elevation of at least 275 feet.
7. The FPS provides two fire water storage tanks, each capable of holding at least 300,000 gallons of water.	Inspection of each fire water storage tank will be performed.	The volume of each fire water storage tank supplying the FPS is at least 300,000 gallons.
8. Two FPS fire pumps provide at least 2000 gpm each at a total head of at least 300 ft.	Testing and/or analysis of each fire pump will be performed.	The tests and/or analysis concludes that each fire pump provides a flow rate of at least 2000 gpm at a total head of at least 300 ft.
9. The fuel tank for the diesel-driven fire pump is capable of holding at least 240 gallons.	Inspection of the diesel-driven fire pump fuel tank will be performed.	The volume of the diesel driven fire pump fuel tank is at least 240 gallons.
10. Individual fire detectors provide fire detection capability and can be used to initiate fire alarms in areas containing safety-related equipment.	Testing will be performed on the as-built individual fire detectors in the fire areas identified in Tier 1 Material, subsection 3.3, Table 3.3-3. (Individual fire detectors will be tested using simulated fire conditions.)	The tested individual fire detectors respond to simulated fire conditions.
11. The FPS seismic standpipe subsystem can be supplied from the FPS fire main by opening the normally closed cross-connect valve to the FPS plant fire main.	Inspection for the existence of a cross-connect valve from the FPS seismic standpipe subsystem to FPS plant fire main will be performed.	Valve FPS-PL-V101 exists and can connect the FPS seismic standpipe subsystem to the FPS plant fire main.

Table 2.3.4-3		
Component Name	**Tag No.**	**Location**
Motor-driven Fire Pump	FPS-MP-01A	Turbine Building
Diesel-driven Fire Pump	FPS-MP-01B	Yard
Jockey Pump	FPS-MP-02	Turbine Building
Primary Fire Water Tank	FPS-MT-01A	Yard
Secondary Fire Water/Clearwell Storage Tank	FPS-MT-01B	Yard
Fire Pump Diesel Fuel Day Tank	FPS-MT-02	Yard

Table 2.3.4-4
FPS Piping Which Must Remain Functional Following a Safe Shutdown Earthquake

L049	L114	L142	L188
L090A	L115	L143	L189
L090B	L116	L144	L190
L091A	L117	L145	L191
L091B	L118	L146	L192
L091C	L119	L147	L193
L092A	L120	L148	L194
L092B	L121	L149	L195
L092C	L122	L150	L196
L093	L123	L151	L197
L094	L124	L152	L198
L095	L125	L153	L199
L096	L126	L154	L301
L102	L127	L155	L701
L103	L128	L156	L702
L105	L129	L159	L703
L106	L130	L180	L704
L107	L131	L181	L705
L108	L132	L182	L706
L109	L133A	L183	L707
L110	L133B	L184	L708
L111	L133C	L185	L709
L112	L140	L186	
L113	L141	L187	

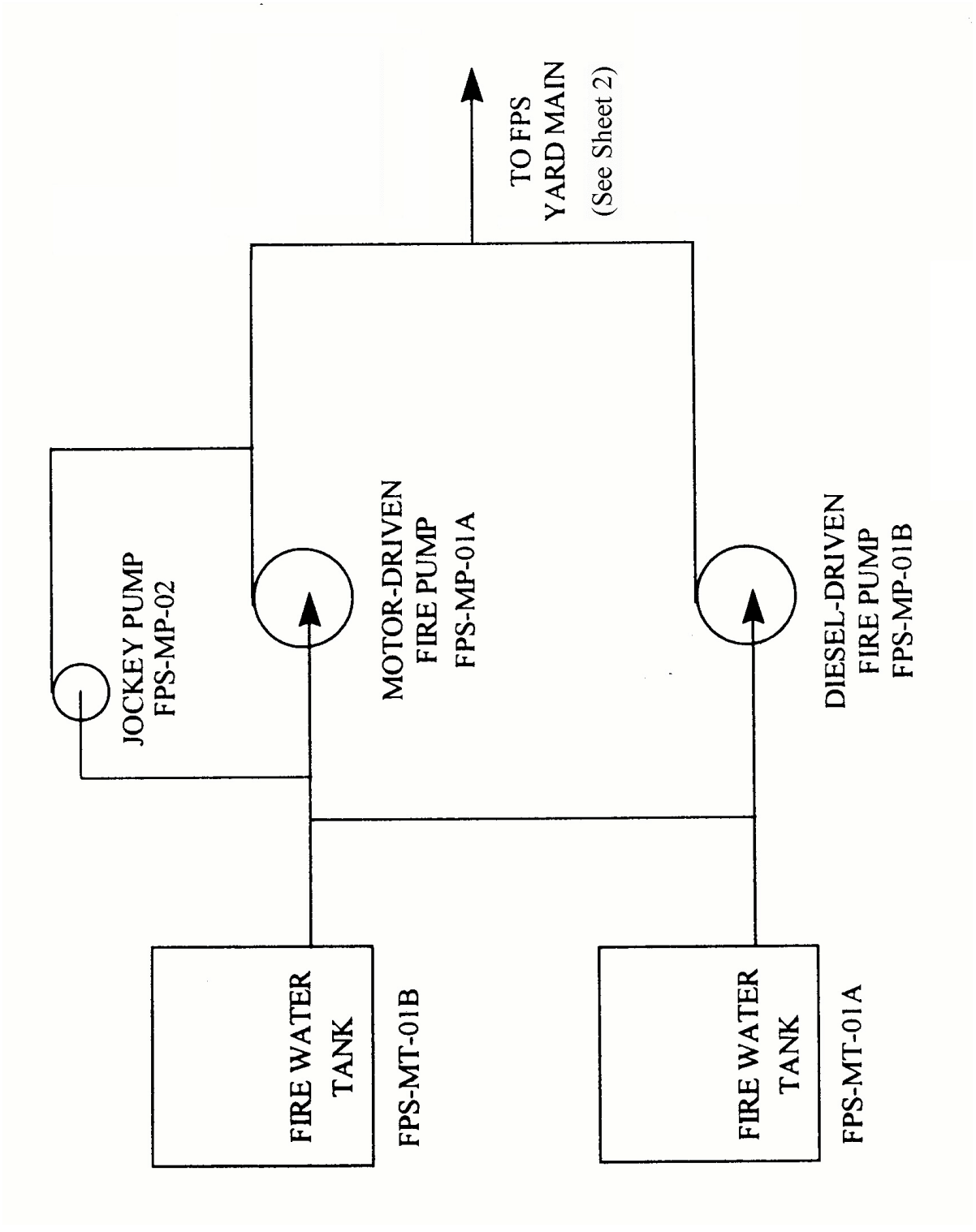

Figure 2.3.4-1 (Sheet 1 of 2)
Fire Protection System

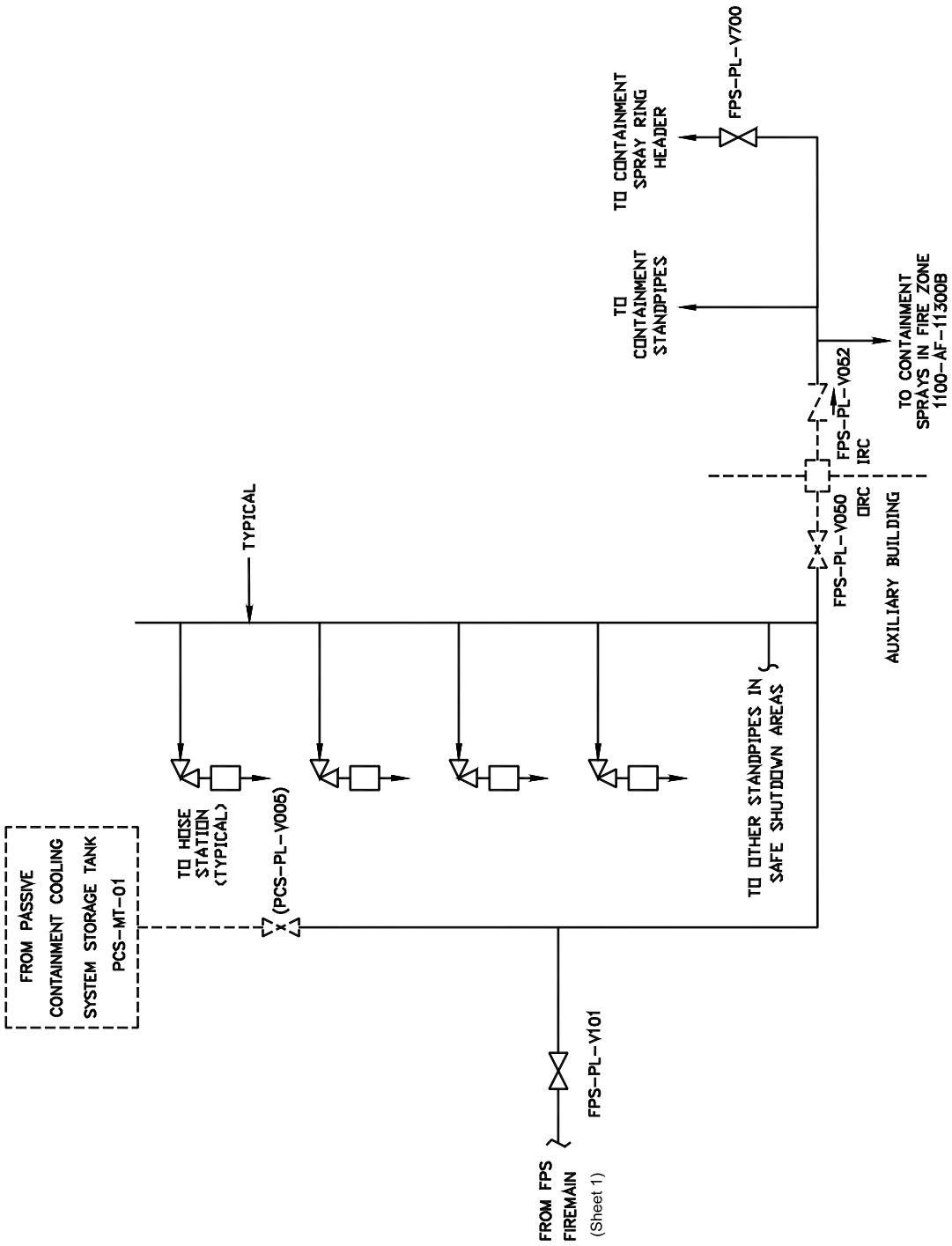

Figure 2.3.4-1 (Sheet 2 of 2)
Fire Protection System

2.3.5 Mechanical Handling System

Design Description

The mechanical handling system (MHS) provides for lifting heavy loads. The MHS equipment can be operated during shutdown and refueling.

The component locations of the MHS are as shown in Table 2.3.5-3.

1. The functional arrangement of the MHS is as described in the Design Description of this Section 2.3.5.

2. The seismic Category I equipment identified in Table 2.3.5-1 can withstand seismic design basis loads without loss of safety function.

3. The MHS components listed below are single failure proof:

   a) Polar crane
   b) Cask handling crane
   c) Equipment hatch hoist
   d) Maintenance hatch hoist

4. The cask handling crane cannot move over the spent fuel pool.

Inspections, Tests, Analyses, and Acceptance Criteria

Table 2.3.5-2 specifies the inspections, tests, analyses, and associated acceptance criteria for the MHS.

Table 2.3.5-1

Equipment Name	Tag No.	Seismic Cat. I	Class 1E/ Qual. for Harsh Envir.	Safety Function
Containment Polar Crane	MHS-MH-01	Yes	No/No	Avoid uncontrolled lowering of heavy load.
Cask Handling Crane	MHS-MH-02	Yes	No/No	Avoid uncontrolled lowering of heavy load.
Equipment Hatch Hoist	MHS-MH-05	Yes	No/No	Avoid uncontrolled lowering of heavy load.
Maintenance Hatch Hoist	MHS-MH-06	Yes	No/No	Avoid uncontrolled lowering of heavy load.

Table 2.3.5-2
Inspections, Tests, Analyses, and Acceptance Criteria

Design Commitment	Inspections, Tests, Analyses	Acceptance Criteria
1. The functional arrangement of the MHS is as described in the Design Description of this Section 2.3.5.	Inspection of the as-built system will be performed.	The as-built MHS conforms with the functional arrangement as described in the Design Description of this Section 2.3.5.
2. The seismic Category I equipment identified in Table 2.3.5-1 can withstand seismic design basis loads without loss of safety function.	i) Inspection will be performed to verify that the seismic Category I equipment identified in Table 2.3.5-1 is located on the Nuclear Island. ii) Type tests, analyses, or a combination of type tests and analyses of seismic Category I equipment will be performed. iii) Inspection will be performed for the existence of a report verifying that the as-built equipment including anchorage is seismically bounded by the tested or analyzed conditions.	i) The seismic Category I equipment identified in Table 2.3.5-1 is located on the Nuclear Island. ii) A report exists and concludes that the seismic Category I equipment can withstand seismic design basis loads without loss of safety function. iii) A report exists and concludes that the as-built equipment including anchorage is seismically bounded by the tested or analyzed conditions.
3.a) The polar crane is single failure proof.	Validation of double design factors is provided for hooks where used as load bearing components. Validation of redundant factors is provided for load bearing components such as: • Hoisting ropes • Sheaves • Equalizer assembly • Holding brakes The polar crane shall be static-load tested to 125% of the rated load. The polar crane shall lift a test load that is 100% of the rated load. Then it shall lower, stop, and hold the test load.	A report exists and concludes that the polar crane is single failure proof. A certificate of conformance from the vendor exists and concludes that the polar crane is single failure proof.

Table 2.3.5-2 (cont.)
Inspections, Tests, Analyses, and Acceptance Criteria

Design Commitment	Inspections, Tests, Analyses	Acceptance Criteria
3.b) The cask handling crane is single failure proof.	Validation of double design factors is provided for hooks where used as load bearing components. Validation of redundant factors is provided for load bearing components such as: • Hoisting ropes • Sheaves • Equalizer assembly • Holding brakes The cask handling crane shall be static-load tested to 125% of the rated load. The cask handling crane shall lift a test load that is 100% of the rated load. Then it shall lower, stop, and hold the test load.	A report exists and concludes that the cask handling crane is single failure proof. A certificate of conformance from the vendor exists and concludes that the cask handling crane is single failure proof.
3.c) The equipment hatch hoist is single failure proof.	Validation of double design factors is provided for hooks where used as load bearing components. Validation of redundant factors is provided for load bearing components such as: • Hoisting ropes • Sheaves • Equalizer assembly • Holding brakes The equipment hatch hoist holding mechanism shall stop and hold the hatch.	A report exists and concludes that the equipment hatch hoist is single failure proof. A certificate of conformance from the vendor exists and concludes that the equipment hatch hoist is single failure proof.

Table 2.3.5-2 (cont.)
Inspections, Tests, Analyses, and Acceptance Criteria

Design Commitment	Inspections, Tests, Analyses	Acceptance Criteria
3.d) The maintenance hatch hoist is single failure proof.	Validation of double design factors is provided for hooks where used as load bearing components. Validation of redundant factors is provided for load bearing components such as: • Hoisting ropes • Sheaves • Equalizer assembly • Holding brakes The maintenance hatch hoist holding mechanism shall stop and hold the hatch.	A report exists and concludes that the maintenance hatch hoist is single failure proof. A certificate of conformance from the vendor exists and concludes that the maintenance hatch hoist is single failure proof.
4. The cask handling crane cannot move over the spent fuel pool.	Testing of the cask handling crane is performed.	The cask handling crane does not move over the spent fuel pool.

Table 2.3.5-3		
Component Name	**Tag No.**	**Component Location**
Containment Polar Crane	MHS-MH-01	Containment
Cask Handling Crane	MHS-MH-02	Auxiliary Building
Equipment Hatch Hoist	MHS-MH-05	Containment
Maintenance Hatch Hoist	MHS-MH-06	Containment

2.3.6 Normal Residual Heat Removal System

Design Description

The normal residual heat removal system (RNS) removes heat from the core and reactor coolant system (RCS) and provides RCS low temperature over-pressure (LTOP) protection at reduced RCS pressure and temperature conditions after shutdown. The RNS also provides a means for cooling the in-containment refueling water storage tank (IRWST) during normal plant operation.

The RNS is as shown in Figure 2.3.6-1 and the RNS component locations are as shown in Table 2.3.6-5.

1. The functional arrangement of the RNS is as described in the Design Description of this Section 2.3.6.

2. a) The components identified in Table 2.3.6-1 as ASME Code Section III are designed and constructed in accordance with ASME Code Section III requirements.

   b) The piping identified in Table 2.3.6-2 as ASME Code Section III is designed and constructed in accordance with ASME Code Section III requirements.

3. a) Pressure boundary welds in components identified in Table 2.3.6-1 as ASME Code Section III meet ASME Code Section III requirements.

   b) Pressure boundary welds in piping identified in Table 2.3.6-2 as ASME Code Section III meet ASME Code Section III requirements.

4. a) The components identified in Table 2.3.6-1 as ASME Code Section III retain their pressure boundary integrity at their design pressure.

   b) The piping identified in Table 2.3.6-2 as ASME Code Section III retains its pressure boundary integrity at its design pressure.

5. a) The seismic Category I equipment identified in Table 2.3.6-1 can withstand seismic design basis loads without loss of safety function.

   b) Each of the lines identified in Table 2.3.6-2 for which functional capability is required is designed to withstand combined normal and seismic design basis loads without a loss of its functional capability.

6. Each of the as-built lines identified in Table 2.3.6-2 as designed for leak before break (LBB) meets the LBB criteria, or an evaluation is performed of the protection from the dynamic effects of a rupture of the line.

7. a) The Class 1E equipment identified in Table 2.3.6-1 as being qualified for a harsh environment can withstand the environmental conditions that would exist before, during, and following a design basis accident without loss of safety function for the time required to perform the safety function.

   b) The Class 1E components identified in Table 2.3.6-1 are powered from their respective Class 1E division.

c) Separation is provided between RNS Class 1E divisions, and between Class 1E divisions and non-Class 1E cable.

8. The RNS provides the following safety-related functions:

   a) The RNS preserves containment integrity by isolation of the RNS lines penetrating the containment.

   b) The RNS provides a flow path for long-term, post-accident makeup to the RCS.

9. The RNS provides the following nonsafety-related functions:

   a) The RNS provides low temperature overpressure protection (LTOP) for the RCS during shutdown operations.

   b) The RNS provides heat removal from the reactor coolant during shutdown operations.

   c) The RNS provides low pressure makeup flow from the SFS cask loading pit to the RCS for scenarios following actuation of the automatic depressurization system (ADS).

   d) The RNS provides heat removal from the in-containment refueling water storage tank.

10. Safety-related displays identified in Table 2.3.6-1 can be retrieved in the main control room (MCR).

11. a) Controls exist in the MCR to cause those remotely operated valves identified in Table 2.3.6-1 to perform active functions.

    b) The valves identified in Table 2.3.6-1 as having protection and safety monitoring system (PMS) control perform active safety functions after receiving a signal from the PMS.

12. a) The motor-operated and check valves identified in Table 2.3.6-1 perform an active safety-related function to change position as indicated in the table.

    b) After loss of motive power, the remotely operated valves identified in Table 2.3.6-1 assume the indicated loss of motive power position.

13. Controls exist in the MCR to cause the pumps identified in Table 2.3.6-3 to perform the listed function.

14. Displays of the RNS parameters identified in Table 2.3.6-3 can be retrieved in the MCR.

Inspections, Tests, Analyses, and Acceptance Criteria

Table 2.3.6-4 specifies the inspections, tests, analyses, and associated acceptance criteria for the RNS.

Table 2.3.6-1

Equipment Name	Tag No.	ASME Code Section III	Seismic Cat. I	Remotely Operated Valve	Class 1E/ Qual. for Harsh Envir.	Safety-Related Display	Control PMS	Active Function	Loss of Motive Power Position
RNS Pump A (Pressure Boundary)	RNS-MP-01A	Yes	Yes	-	-/-	-	-	No	-
RNS Pump B (Pressure Boundary)	RNS-MP-01B	Yes	Yes	-	-/-	-	-	No	-
RNS Heat Exchanger A (Tube Side)	RNS-ME-01A	Yes	Yes	-	-/-	-	-	-	-
RNS Heat Exchanger B (Tube Side)	RNS-ME-01B	Yes	Yes	-	-/-	-	-	-	-
RCS Inner Hot Leg Suction Motor-operated Isolation Valve	RNS-PL-V001A	Yes	Yes	Yes	Yes/Yes	Yes (Valve Position)	Yes	Transfer Closed	As Is
RCS Inner Hot Leg Suction Motor-operated Isolation Valve	RNS-PL-V001B	Yes	Yes	Yes	Yes/Yes	Yes (Valve Position)	Yes	Transfer Closed	As Is
RCS Outer Hot Leg Suction Motor-operated Isolation Valve	RNS-PL-V002A	Yes	Yes	Yes	Yes/Yes	Yes (Valve Position)	Yes	Transfer Closed	As Is
RCS Outer Hot Leg Suction Motor-operated Isolation Valve	RNS-PL-V002B	Yes	Yes	Yes	Yes/Yes	Yes (Valve Position)	Yes	Transfer Closed	As Is

Note: Dash (-) indicates not applicable.

Table 2.3.6-1 (cont.)

Equipment Name	Tag No.	ASME Code Section III	Seismic Cat. I	Remotely Operated Valve	Class 1E/ Qual. for Harsh Envir.	Safety-Related Display	Control PMS	Active Function	Loss of Motive Power Position
RCS Pressure Boundary Thermal Relief Check Valve	RNS-PL-V003A	Yes	Yes	No	-/-	No	-	Transfer Open/ Transfer Closed	-
RCS Pressure Boundary Thermal Relief Check Valve	RNS-PL-V003B	Yes	Yes	No	-/-	No	-	Transfer Open/ Transfer Closed	-
RNS Discharge Motor-operated Containment Isolation Valve	RNS-PL-V011	Yes	Yes	Yes	Yes/No	Yes (Valve Position)	Yes	Transfer Closed	As Is
RNS Discharge Containment Isolation Test Connection	RNS-PL-V012	Yes	Yes	No	-/-	No	No	Transfer Open	-
RNS Discharge Header Containment Isolation Check Valve	RNS-PL-V013	Yes	Yes	No	-/-	No	-	Transfer Open/ Transfer Closed	-
RNS Discharge RCS Pressure Boundary Check Valve	RNS-PL-V015A	Yes	Yes	No	-/-	No	-	Transfer Open/ Transfer Closed	-

Note: Dash (-) indicates not applicable.

Table 2.3.6-1 (cont.)

Equipment Name	Tag No.	ASME Code Section III	Seismic Cat. I	Remotely Operated Valve	Class 1E/ Qual. for Harsh Envir.	Safety-Related Display	Control PMS	Active Function	Loss of Motive Power Position
RNS Discharge RCS Pressure Boundary Check Valve	RNS-PL-V015B	Yes	Yes	No	-/-	No	-	Transfer Open/ Transfer Closed	-
RNS Discharge RCS Pressure Boundary Check Valve	RNS-PL-V017A	Yes	Yes	No	-/-	No	-	Transfer Open/ Transfer Closed	-
RNS Discharge RCS Pressure Boundary Check Valve	RNS-PL-V017B	Yes	Yes	No	-/-	No	-	Transfer Open/ Transfer Closed	-
RNS Hot Leg Suction Pressure Relief Valve	RNS-PL-V021	Yes	Yes	No	-/-	No	-	Transfer Open/ Transfer Closed	-
RNS Suction Header Motor-operated Containment Isolation Valve	RNS-PL-V022	Yes	Yes	Yes	Yes/No	Yes (Valve Position)	Yes	Transfer Closed	As Is
RNS Suction from IRWST Motor-operated Isolation Valve	RNS-PL-V023	Yes	Yes	Yes	Yes/Yes	Yes (Valve Position)	Yes	Transfer Closed	As Is
RNS Discharge to IRWST Motor-operated Isolation Valve	RNS-PL-V024	Yes	Yes	Yes	-/-	No	No	No	As Is

Note: Dash (-) indicates not applicable.

Table 2.3.6-1 (cont.)

Equipment Name	Tag No.	ASME Code Section III	Seismic Cat. I	Remotely Operated Valve	Class 1E/ Qual. for Harsh Envir.	Safety-Related Display	Control PMS	Active Function	Loss of Motive Power Position
RNS Discharge Header Relief Valve	RNS-PL-V045	Yes	Yes	No	-/-	No	-	Transfer Open/ Transfer Closed	-
RNS Suction from Cask Loading Pit Motor-operated Isolation Valve	RNS-PL-V055	Yes	Yes	Yes	No/No	No	No	No	As Is
RNS Suction from Cask Loading Pit Check Valve	RNS-PL-V056	Yes	Yes	No	-/-	No	-	No	-
RNS Pump Miniflow Air-Operated Isolation Valve	RNS-PL-V057A	Yes	Yes	Yes	No/No	No	No	No	Open
RNS Pump Miniflow Air-Operated Isolation Valve	RNS-PL-V057B	Yes	Yes	Yes	No/No	No	No	No	Open
RNS Return from Chemical and Volume Control System (CVS) Containment Isolation Valve	RNS-PL-V061	Yes	Yes	Yes	Yes/No	Yes (Valve Position)	Yes	Transfer Closed	Closed

Note: Dash (-) indicates not applicable.

Table 2.3.6-2

Line Name	Line No.	ASME Code Section III	Leak Before Break	Functional Capability Required
RNS Suction Lines, from the RCS Hot Leg Connection to the RCS Side of Valves RNS PL-V001A and RNS-PL-V001B	RNS-L001 RNS-L002A RNS-L002B	Yes	Yes	No
RNS Suction Lines, from the RCS Pressure Boundary Valves, RNS-PL-V001A and RNS-PL-V001B, to the RNS pumps	RNS-L004A RNS-L004B RNS-L005 RNS-L006 RNS-L007A RNS-L007B RNS-L009A RNS-L009B	Yes	No	Yes Yes Yes No No No No No
RNS Suction Line from CVS	RNS-L061	Yes	No	No
RNS Suction Line from IRWST	RNS-L029	Yes	No	No
RNS Suction Line LTOP Relief	RNS-L040	Yes	No	Yes
RNS Discharge Lines, from the RNS Pumps to the RNS Heat Exchangers RNS-ME-01A and RNS-ME-01B	RNS-L011A RNS-L011B	Yes	No	Yes
RNS Discharge Lines, from RNS Heat Exchanger RNS-ME-01A to Containment Isolation Valve RNS-PL-V011	RNS-L012A RNS-L014	Yes	No	Yes
RNS Discharge Line, from RNS Heat Exchanger RNS-ME-01B to Common Discharge Header RNS-DBC-L014	RNS-L012B	Yes	No	Yes
RNS Discharge Lines, Containment Isolation Valve RNS-PL-V011 to Containment Isolation Valve RNS-PL-V013	RNS-L016	Yes	No	Yes

Table 2.3.6-2 (cont.)

Line Name	Line No.	ASME Code Section III	Leak Before Break	Functional Capability Required
RNS Suction Line from Cask Loading Pit	RNS-L065	Yes	No	No
RNS Discharge Lines, from Containment Isolation Valve RNS-PL-V013 to RCS Pressure Boundary Isolation Valves RNS-PL-V015A and RNS-PL-V015B	RNS-L017 RNS-L018A RNS-L018B	Yes	No	Yes
RNS Discharge Lines, from Direct Vessel Injection (DVI) Line RNS-BBC-L018A to Passive Core Cooling System (PXS) IRWST Return Isolation Valve RNS-PL-V024	RNS-L020	Yes	No	No
RNS Discharge Lines, from RCS Pressure Boundary Isolation Valves RNS-PL-V015A and RNS-PL-V015B to Reactor Vessel DVI Nozzles	RNS-L019A RNS-L019B	Yes	No	Yes
RNS Heat Exchanger Bypass	RNS-L008A RNS-L008B	Yes	No	No
RNS Suction from Spent Fuel Pool	RNS-L052	Yes	No	No
RNS Pump Miniflow Return	RNS-L030A RNS-L030B	Yes	No	No
RNS Discharge to Spent Fuel Pool	RNS-L051	Yes	No	No
RNS Discharge to CVS Purification	RNS-L021	Yes	No	No

Table 2.3.6-3			
Equipment Name	**Tag No.**	**Display**	**Control Function**
RNS Pump 1A (Motor)	RNS-MP-01A	Yes (Run Status)	Start
RNS Pump 1B (Motor)	RNS-MP-01B	Yes (Run Status)	Start
RNS Flow Sensor	RNS-01A	Yes	-
RNS Flow Sensor	RNS-01B	Yes	-
RNS Suction from Cask Loading Pit Isolation Valve (Position Indicator)	RNS-PL-V055	Yes	-
RNS Pump Miniflow Isolation Valve (Position Indicator)	RNS-PL-V057A	Yes	-
RNS Pump Miniflow Isolation Valve (Position Indicator)	RNS-PL-V057B	Yes	-

Note: Dash (-) indicates not applicable.

Table 2.3.6-4
Inspections, Tests, Analyses, and Acceptance Criteria

Design Commitment	Inspections, Tests, Analyses	Acceptance Criteria
1. The functional arrangement of the RNS is as described in the Design Description of this Section 2.3.6.	Inspection of the as-built system will be performed.	The as-built RNS conforms with the functional arrangement described in the Design Description of this Section 2.3.6.
2.a) The components identified in Table 2.3.6-1 as ASME Code Section III are designed and constructed in accordance with ASME Code Section III requirements.	Inspection will be conducted of the as-built components as documented in the ASME design reports.	The ASME Code Section III design reports exist for the as-built components identified in Table 2.3.6-1 as ASME Code Section III.
2.b) The piping identified in Table 2.3.6-2 as ASME Code Section III is designed and constructed in accordance with ASME Code Section III requirements.	Inspection will be conducted of the as-built piping as documented in the ASME design reports.	The ASME Code Section III design reports exist for the as-built piping identified in Table 2.3.6-2 as ASME Code Section III.
3.a) Pressure boundary welds in components identified in Table 2.3.6-1 as ASME Code Section III meet ASME Code Section III requirements.	Inspection of the as-built pressure boundary welds will be performed in accordance with the ASME Code Section III.	A report exists and concludes that the ASME Code Section III requirements are met for non-destructive examination of pressure boundary welds.
3.b) Pressure boundary welds in piping identified in Table 2.3.6-2 as ASME Code Section III meet ASME Code Section III requirements.	Inspection of the as-built pressure boundary welds will be performed in accordance with the ASME Code Section III.	A report exists and concludes that the ASME Code Section III requirements are met for non-destructive examination of pressure boundary welds.
4.a) The components identified in Table 2.3.6-1 as ASME Code Section III retain their pressure boundary integrity at their design pressure.	A hydrostatic test will be performed on the components required by the ASME Code Section III to be hydrostatically tested.	A report exists and concludes that the results of the hydrostatic test of the components identified in Table 2.3.6-1 as ASME Code Section III conform with the requirements of the ASME Code Section III.

Table 2.3.6-4 (cont.)
Inspections, Tests, Analyses, and Acceptance Criteria

Design Commitment	Inspections, Tests, Analyses	Acceptance Criteria
4.b) The piping identified in Table 2.3.6-2 as ASME Code Section III retains its pressure boundary integrity at its design pressure.	A hydrostatic test will be performed on the piping required by the ASME Code Section III to be hydrostatically tested.	A report exists and concludes that the results of the hydrostatic test of the piping identified in Table 2.3.6-2 as ASME Code Section III conform with the requirements of the ASME Code Section III.
5.a) The seismic Category I equipment identified in Table 2.3.6-1 can withstand seismic design basis loads without loss of safety function.	i) Inspection will be performed to verify that the seismic Category I equipment identified in Table 2.3.6-1 is located on the Nuclear Island. ii) Type tests, analyses, or a combination of type tests and analyses of seismic Category I equipment will be performed. iii) Inspection will be performed for the existence of a report verifying that the as-built equipment including anchorage is seismically bounded by the tested or analyzed conditions.	i) The seismic Category I equipment identified in Table 2.3.6-1 is located on the Nuclear Island. ii) A report exists and concludes that the seismic Category I equipment can withstand seismic design basis loads without loss of safety function. iii) A report exists and concludes that the as-built equipment including anchorage is seismically bounded by the tested or analyzed conditions.
5.b) Each of the lines identified in Table 2.3.6-2 for which functional capability is required is designed to withstand combined normal and seismic design basis loads without a loss of its functional capability.	Inspection will be performed for the existence of a report verifying that the as-built piping meets the requirements for functional capability.	A report exists and concludes that each of the as-built lines identified in Table 2.3.6-2 for which functional capability is required meets the requirements for functional capability.
6. Each of the as-built lines identified in Table 2.3.6-2 as designed for LBB meets the LBB criteria, or an evaluation is performed of the protection from the dynamic effects of a rupture of the line.	Inspection will be performed for the existence of an LBB evaluation report or an evaluation report on the protection from dynamic effects of a pipe break. Tier 1 Material, Section 3.3, Nuclear Island Buildings, contains the design descriptions and inspections, tests, analyses, and acceptance criteria for protection from the dynamic effects of pipe rupture.	An LBB evaluation report exists and concludes that the LBB acceptance criteria are met by the as-built RCS piping and piping materials, or a pipe break evaluation report exists and concludes that protection from the dynamic effects of a line break is provided.

Table 2.3.6-4 (cont.)
Inspections, Tests, Analyses, and Acceptance Criteria

Design Commitment	Inspections, Tests, Analyses	Acceptance Criteria
7.a) The Class 1E equipment identified in Tables 2.3.6-1 as being qualified for a harsh environment can withstand the environmental conditions that would exist before, during, and following a design basis accident without loss of safety function for the time required to perform the safety function.	i) Type tests, analyses, or a combination of type tests and analyses will be performed on Class 1E equipment located in a harsh environment.	i) A report exists and concludes that the Class 1E equipment identified in Table 2.3.6-1 as being qualified for a harsh environment can withstand the environmental conditions that would exist before, during, and following a design basis accident without loss of safety function for the time required to perform the safety function.
	ii) Inspection will be performed of the as-built Class 1E equipment and the associated wiring, cables, and terminations located in a harsh environment.	ii) A report exists and concludes that the as-built Class 1E equipment and the associated wiring, cables, and terminations identified in Table 2.3.6-1 as being qualified for a harsh environment are bounded by type tests, analyses, or a combination of type tests and analyses.
7.b) The Class 1E components identified in Table 2.3.6-1 are powered from their respective Class 1E division.	Testing will be performed on the RNS by providing a simulated test signal in each Class 1E division.	A simulated test signal exists at the Class 1E equipment identified in Table 2.3.6-1 when the assigned Class 1E division is provided the test signal.
7.c) Separation is provided between RNS Class 1E divisions, and between Class 1E divisions and non-Class 1E cable.	See Tier 1 Material, Table 3.3-6, item 7.d.	See Tier 1 Material, Table 3.3-6, item 7.d.
8.a) The RNS preserves containment integrity by isolation of the RNS lines penetrating the containment.	See Tier 1 Material, Table 2.2.1-3, item 7.	See Tier 1 Material, Table 2.2.1-3, item 7.
8.b) The RNS provides a flow path for long-term, post-accident makeup to the RCS.	See item 1 in this table.	See item 1 in this table.
9.a) The RNS provides LTOP for the RCS during shutdown operations.	i) Inspections will be conducted on the low temperature overpressure protection relief valve to confirm that the capacity of the vendor code plate rating is greater than or equal to system relief requirements.	i) The rated capacity recorded on the valve vendor code plate is not less than the flow required to provide low-temperature overpressure protection for the RCS, as determined by the LTOPS evaluation based on the pressure-temperature curves developed for the as-procured reactor vessel material.

Table 2.3.6-4 (cont.)
Inspections, Tests, Analyses, and Acceptance Criteria

Design Commitment	Inspections, Tests, Analyses	Acceptance Criteria
	ii) Testing and analysis in accordance with the ASME Code Section III will be performed to determine set pressure.	ii) A report exists and concludes that the relief valve opens at a pressure not greater than the set pressure required to provide low-temperature overpressure protection for the RCS, as determined by the LTOPS evaluation based on the pressure-temperature curves developed for the as-procured reactor vessel material.
9.b) The RNS provides heat removal from the reactor coolant during shutdown operations.	i) Inspection will be performed for the existence of a report that determines the heat removal capability of the RNS heat exchangers.	i) A report exists and concludes that the product of the overall heat transfer coefficient and the effective heat transfer area, UA, of each RNS heat exchanger is greater than or equal to 2.2 million Btu/hr-°F.
	ii) Testing will be performed to confirm that the RNS can provide flow through the RNS heat exchangers when the pump suction is aligned to the RCS hot leg and the discharge is aligned to both PXS DVI lines with the RCS at atmospheric pressure.	ii) Each RNS pump provides at least 1400 gpm net flow to the RCS when the hot leg water level is at an elevation 15.5 inches ± 2 inches above the bottom of the hot leg.
	iii) Inspection will be performed of the reactor coolant loop piping.	iii) The RCS cold legs piping centerline is 17.5 inches ± 2 inches above the hot legs piping centerline.
	iv) Inspection will be performed of the RNS pump suction piping.	iv) The RNS pump suction piping from the hot leg to the pump suction piping low point does not form a local high point (defined as an upward slope with a vertical rise greater than 3 inches).
	v) Inspection will be performed of the RNS pump suction nozzle connection to the RCS hot leg.	v) The RNS suction line connection to the RCS is constructed from 20-inch Schedule 140 pipe.

Table 2.3.6-4 (cont.)
Inspections, Tests, Analyses, and Acceptance Criteria

Design Commitment	Inspections, Tests, Analyses	Acceptance Criteria
9.c) The RNS provides low pressure makeup flow from the cask loading pit to the RCS for scenarios following actuation of the ADS.	Testing will be performed to confirm that the RNS can provide low pressure makeup flow from the cask loading pit to the RCS when the pump suction is aligned to the cask loading pit and the discharge is aligned to both PXS DVI lines with RCS at atmospheric pressure.	Each RNS pump provides at least 1100 gpm net flow to the RCS when the water level above the bottom of the cask loading pit is 1 foot ± 6 inches.
9.d) The RNS provides heat removal from the in-containment refueling water storage tank (IRWST).	Testing will be performed to confirm that the RNS can provide flow through the RNS heat exchangers when the pump suction is aligned to the IRWST and the discharge is aligned to the IRWST.	Two operating RNS pumps provide at least 2000 gpm to the IRWST.
10. Safety-related displays identified in Table 2.3.6-1 can be retrieved in the MCR.	Inspection will be performed for retrievability of the safety-related displays in the MCR.	Safety-related displays identified in Table 2.3.6-1 can be retrieved in the MCR.
11.a) Controls exist in the MCR to cause those remotely operated valves identified in Table 2.3.6-1 to perform active functions.	Stroke testing will be performed on the remotely operated valves identified in Table 2.3.6-1 using the controls in the MCR.	Controls in the MCR operate to cause those remotely operated valves identified in Table 2.3.6-1 to perform active functions.
11.b) The valves identified in Table 2.3.6-1 as having PMS control perform active safety functions after receiving a signal from the PMS.	Testing will be performed using real or simulated signals into the PMS.	The valves identified in Table 2.3.6-1 as having PMS control perform the active function identified in the table after receiving a signal from the PMS.

Table 2.3.6-4 (cont.)
Inspections, Tests, Analyses, and Acceptance Criteria

Design Commitment	Inspections, Tests, Analyses	Acceptance Criteria
12.a) The motor-operated and check valves identified in Table 2.3.6-1 perform an active safety-related function to change position as indicated in the table.	i) Tests or type tests of motor-operated valves will be performed that demonstrate the capability of the valve to operate under its design conditions.	i) A test report exists and concludes that each motor-operated valve changes position as indicated in Table 2.3.6-1 under design conditions.
	ii) Inspection will be performed for the existence of a report verifying that the as-built motor-operated valves are bounded by the tested conditions.	ii) A report exists and concludes that the as-built motor-operated valves are bounded by the tested conditions.
	iii) Tests of the motor-operated valves will be performed under preoperational flow, differential pressure and temperature conditions.	iii) Each motor-operated valve changes position as indicated in Table 2.3.6-1 under preoperational test conditions.
	iv) Exercise testing of the check valves active safety functions identified in Table 2.3.6-1 will be performed under preoperational test pressure, temperature and fluid flow conditions.	iv) Each check valve changes position as indicated in Table 2.3.6-1.
12.b) After loss of motive power, the remotely operated valves identified in Table 2.3.6-1 assume the indicated loss of motive power position.	Testing of the remotely operated valves will be performed under the conditions of loss of motive power.	Upon loss of motive power, each remotely operated valve identified in Table 2.3.6-1 assumes the indicated loss of motive power position.
13. Controls exist in the MCR to cause the pumps identified in Table 2.3.6-3 to perform the listed function.	Testing will be performed to actuate the pumps identified in Table 2.3.6-3 using controls in the MCR.	Controls in the MCR cause pumps identified in Table 2.3.6-3 to perform the listed action.
14. Displays of the RNS parameters identified in Table 2.3.6-3 can be retrieved in the MCR.	Inspection will be performed for retrievability in the MCR of the displays identified in Table 2.3.6-3.	Displays of the RNS parameters identified in Table 2.3.6-3 are retrieved in the MCR.

Table 2.3.6-5		
Component Name	**Tag No.**	**Component Location**
RNS Pump A	RNS-MP-01A	Auxiliary Building
RNS Pump B	RNS-MP-01B	Auxiliary Building
RNS Heat Exchanger A	RNS-ME-01A	Auxiliary Building
RNS Heat Exchanger B	RNS-ME-01B	Auxiliary Building

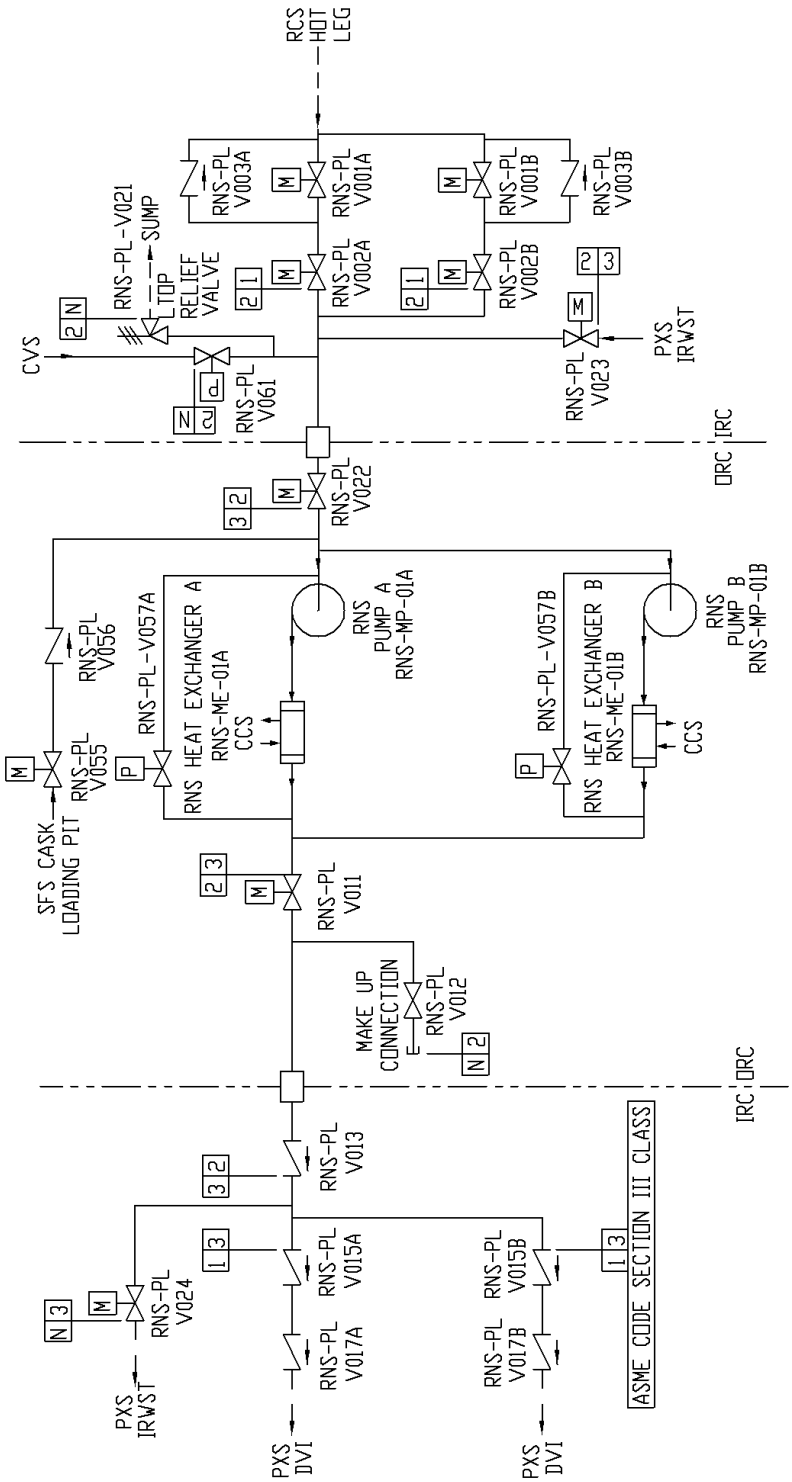

Figure 2.3.6-1
Normal Residual Heat Removal System

2.3.7 Spent Fuel Pool Cooling System

Design Description

The spent fuel pool cooling system (SFS) removes decay heat from spent fuel by transferring heat from the water in the spent fuel pool to the component cooling water system during normal modes of operation. The SFS purifies the water in the spent fuel pool, fuel transfer canal, and in-containment refueling water storage tank during normal modes of operation. Following events such as earthquakes, or fires, if the normal heat removal method is not available, decay heat is removed from spent fuel by boiling water in the pool. In the event of long-term station blackout, makeup water is supplied to the spent fuel pool from onsite storage tanks.

The SFS is as shown in Figure 2.3.7-1 and the component locations of the SFS are as shown in Table 2.3.7-5.

1. The functional arrangement of the SFS is as described in the Design Description of this Section 2.3.7.

2. a) The components identified in Table 2.3.7-1 as ASME Code Section III are designed and constructed in accordance with ASME Code Section III requirements.

   b) The piping lines identified in Table 2.3.7-2 as ASME Code Section III are designed and constructed in accordance with ASME Code Section III requirements.

3. Pressure boundary welds in piping lines identified in Table 2.3.7-2 as ASME Code Section III meet ASME Code Section III requirements.

4. The piping lines identified in Table 2.3.7-2 as ASME Code Section III retain their pressure boundary integrity at their design pressure.

5. The seismic Category I components identified in Table 2.3.7-1 can withstand seismic design basis loads without loss of safety function.

6. a) The Class 1E components identified in Table 2.3.7-1 are powered from their respective Class 1E division.

   b) Separation is provided between SFS Class 1E divisions, and between Class 1E divisions and non-Class 1E cable.

7. The SFS performs the following safety-related functions:

   a) The SFS preserves containment integrity by isolating the SFS piping lines penetrating the containment.

   b) The SFS provides spent fuel cooling for 7 days by boiling the spent fuel pool water and makeup water from on-site water storage tanks.

   c) The SFS provides check valves in the drain line from the refueling cavity to prevent flooding of the refueling cavity during containment flooding.

8. The SFS provides the nonsafety-related function of removing spent fuel decay heat using pumped flow through a heat exchanger.

9. Safety-related displays identified in Table 2.3.7-1 can be retrieved in the main control room (MCR).

10. Controls exist in the MCR to cause the pumps identified in Table 2.3.7-3 to perform their listed functions.

11. Displays of the SFS parameters identified in Table 2.3.7-3 can be retrieved in the MCR.

Inspections, Tests, Analyses, and Acceptance Criteria

Table 2.3.7-4 specifies the inspections, tests, analyses, and associated acceptance criteria for the SFS.

Table 2.3.7-1

Component Name	Tag No.	ASME Code Section III	Seismic Cat 1	Remotely Operated Valve	Class 1E/ Qual for Harsh Envir.	Safety-Related Display	Control PMS	Active Function	Loss of Motive Power Position
Spent Fuel Pool Level Sensor	SFS-019A	No	Yes	-	Yes/No	Yes	-	-	-
Spent Fuel Pool Level Sensor	SFS-019B	No	Yes	-	Yes/No	Yes	-	-	-
Spent Fuel Pool Level Sensor	SFS-019C	No	Yes	-	Yes/No	Yes	-	-	-
Refueling Cavity Drain to SGS Compartment Isolation Valve	SFS-PL-V031	Yes	Yes	No	-/-	Yes	-	-	-
Refueling Cavity to SFS Pump Suction Isolation Valve	SFS-PL-V032	Yes	Yes	No	-/-	No	-	-	-
Refueling Cavity Drain to Containment Sump Isolation Valve	SFS-PL-V033	Yes	Yes	No	-/-	Yes	-	-	-
IRWST to SFS Pump Suction Line Isolation Valve	SFS-PL-V039	Yes	Yes	No	-/-	No	-	-	-
Fuel Transfer Canal to SFS Pump Suction Iso. Valve	SFS-PL-V040	Yes	Yes	No	-/-	No	-	-	-

Note: Dash (-) indicates not applicable.

Table 2.3.7-1 (cont.)

Component Name	Tag No.	ASME Code Section III	Seismic Cat 1	Remotely Operated Valve	Class 1E/ Qual for Harsh Envir.	Safety-Related Display	Control PMS	Active Function	Loss of Motive Power Position
Cask Loading Pit to SFS Pump Suction Isolation Valve	SFS-PL-V041	Yes	Yes	No	-/-	No	-	-	-
Cask Loading Pit to SFS Pump Suction Isolation Valve	SFS-PL-V042	Yes	Yes	No	-/-	No	-	Transfer Closed	-
SFS Pump Discharge Line to Cask Loading Pit Isolation Valve	SFS-PL-V045	Yes	Yes	No	-/-	No	-	Transfer Closed	-
Cask Loading Pit to WLS Isolation Valve	SFS-PL-V049	Yes	Yes	No	-/-	No	-	Transfer Closed	-
Spent Fuel Pool to Cask Washdown Pit Isolation Valve	SFS-PL-V066	Yes	Yes	No	-/-	No	-	Transfer Open	-
Cask Washdown Pit Drain Isolation Valve	SFS-PL-V068	Yes	Yes	No	-/-	No	-	Transfer Open	-
Refueling Cavity Drain Line Check Valve	SFS-PL-V071	Yes	Yes	No	-/-	No	-	Transfer Open Transfer Closed	-

Note: Dash (-) indicates not applicable.

Table 2.3.7-1 (cont.)

Component Name	Tag No.	ASME Code Section III	Seismic Cat 1	Remotely Operated Valve	Class 1E/ Qual for Harsh Envir.	Safety-Related Display	Control PMS	Active Function	Loss of Motive Power Position
Refueling Cavity Drain Line Check Valve	SFS-PL-V072	Yes	Yes	No	-/-	No	-	Transfer Open Transfer Closed	-
SFS Containment Floodup Isolation Valve	SFS-PL-V075	Yes	Yes	No	-/-	Yes	-	-	-

Note: Dash (-) indicates not applicable.

Table 2.3.7-2		
Piping Line Name	**Line Number**	**ASME Code Section III**
Spent Fuel Pool to RNS Pump Suction	L014	Yes
Cask Loading Pit to RNS Pump Suction	L015	Yes
Refueling Cavity Drain	L033	Yes
PXS IRWST to SFS Pump Suction	L035	Yes
Refueling Cavity Skimmer to SFS Pump Suction	L036	Yes
Refueling Cavity Drain	L037	Yes
Refueling Cavity Drain	L044	Yes
Fuel Transfer Canal Drain	L047	Yes
Cask Washdown Pit Drain	L068	Yes
Cask Loading Pit Drain	L043	Yes
Cask Pit Transfer Branch Line	L045	Yes
Refueling Cavity Drain	L030	Yes
Refueling Cavity Drain	L040	Yes
Spent Fuel Pool Drain	L066	Yes
Cask Loading Pit to WLS	L067	Yes
RNS Return to Spent Fuel Pool	L100	Yes
SFS Containment Floodup Line	L120	Yes

Table 2.3.7-3			
Component Name	**Tag No.**	**Display**	**Control Function**
SFS Pump 1A	SFS-MP-01A	Yes (Run Status)	Start
SFS Pump 1B	SFS-MP-01B	Yes (Run Status)	Start
SFS Flow Sensor	SFS-13A	Yes	-
SFS Flow Sensor	SFS-13B	Yes	-
Spent Fuel Pool Temperature Sensor	SFS-018	Yes	-
Cask Loading Pit Level Sensor	SFS-022	Yes	-

Note: Dash (-) indicates not applicable.

Table 2.3.7-4
Inspections, Tests, Analyses, and Acceptance Criteria

Design Commitment	Inspections, Tests, Analyses	Acceptance Criteria
1. The functional arrangement of the SFS is as described in the Design Description of this Section 2.3.7.	Inspection of the as-built system will be performed.	The as-built SFS conforms with the functional arrangement as described in the Design Description of this Section 2.3.7.
2.a) The components identified in Table 2.3.7-1 as ASME Code Section III are designed and constructed in accordance with ASME Code Section III requirements.	Inspection will be conducted of the ASME as-built components as documented in the ASME design reports.	The ASME Code Section III design reports exist for the as-built components identified in Table 2.3.7-1 as ASME Code Section III.
2.b) The piping lines identified in Table 2.3.7-2 as ASME Code Section III are designed and constructed in accordance with ASME Code Section III requirements.	Inspection will be conducted of the as-built piping lines as documented in the ASME design reports.	The ASME Code Section III design reports exist for the as-built piping lines identified in Table 2.3.7-2 as ASME Code Section III.
3. Pressure boundary welds in piping lines identified in Table 2.3.7-2 as ASME Code Section III meet ASME Code Section III requirements.	Inspection of the as-built pressure boundary welds will be performed in accordance with the ASME Code Section III.	A report exists and concludes that the ASME Code Section III requirements are met for non-destructive examination of pressure boundary welds.
4. The piping lines identified in Table 2.3.7-2 as ASME Code Section III retain their pressure boundary integrity at their design pressure.	A hydrostatic test will be performed on the piping lines required by the ASME Code Section III to be hydrostatically tested.	A report exists and concludes that the results of the hydrostatic test of the piping lines identified in Table 2.3.7-2 as ASME Code Section III conform with the requirements of the ASME Code Section III.

Table 2.3.7-4 (cont.)
Inspections, Tests, Analyses, and Acceptance Criteria

Design Commitment	Inspections, Tests, Analyses	Acceptance Criteria
5. The seismic Category I components identified in Table 2.3.7-1 can withstand seismic design basis loads without loss of safety functions.	i) Inspection will be performed to verify that the seismic Category I components identified in Table 2.3.7-1 are located on the Nuclear Island. ii) Type tests, analyses, or a combination of type tests and analyses of seismic Category I equipment will be performed. iii) Inspection will be performed for the existence of a report verifying that the as-built equipment including anchorage is seismically bounded by the tested or analyzed conditions.	i) The seismic Category I components identified in Table 2.3.7-1 are located on the Nuclear Island. ii) A report exists and concludes that the seismic Category I equipment can withstand seismic design basis loads without loss of safety function. iii) A report exists and concludes that the as-built equipment including anchorage is seismically bounded by the tested or analyzed conditions.
6.a) The Class 1E components identified in Table 2.3.7-1 are powered from their respective Class 1E division.	Testing will be performed on the SFS by providing a simulated test signal in each Class 1E division.	A simulated test signal exists at the Class 1E components identified in Table 2.3.7-1 when the assigned Class 1E division is provided the test signal.
6.b) Separation is provided between SFS Class 1E divisions, and between Class 1E divisions and non-Class 1E cable.	See Tier 1 Material, Table 3.3-6, item 7.d.	See Tier 1 Material, Table 3.3-6, item 7.d.
7.a) The SFS preserves containment integrity by isolation of the SFS lines penetrating the containment.	See Tier 1 Material, Table 2.2.1-3, items 1 and 7.	See Tier 1 Material, Table 2.2.1-3, items 1 and 7.

Table 2.3.7-4 (cont.)
Inspections, Tests, Analyses, and Acceptance Criteria

Design Commitment	Inspections, Tests, Analyses	Acceptance Criteria
7.b) The SFS provides spent fuel cooling for 7 days by boiling the spent fuel pool water and makeup water from on-site storage tanks.	i) Inspection will be performed to verify that the spent fuel pool includes a sufficient volume of water.	i) The volume of the spent fuel pool and fuel transfer canal above the fuel and to the elevation 6 feet below the operating deck is greater than or equal to 129,500 gallons.
	ii) Inspection will be performed to verify the cask washdown pit includes sufficient volume of water.	ii) The water volume of the cask washdown pit is greater than or equal to 30,900 gallons.
	iii) A safety-related flow path exists from the cask washdown pit to the spent fuel pool.	iii) See item 1 of this table.
	iv) See Tier 1 Material Table 2.2.2-3, item 7.f for inspection, testing, and acceptance criteria for the makeup water supply from the passive containment cooling system (PCS) water storage tank to the spent fuel pool.	iv) See Tier 1 Material Table 2.2.2-3, item 7.f for inspection, testing, and acceptance criteria for the makeup water supply from the PCS water storage tank to the spent fuel pool.
	v) Inspection will be performed to verify that the passive containment cooling system water storage tank includes a sufficient volume of water.	v) See Tier 1 Material Table 2.2.2-3, item 7.f for the volume of the passive containment cooling system water storage tank.
	vi) See Tier 1 Material Table 2.2.2-3, items 8.a and 8.b for inspection, testing, and acceptance criteria to verify that the passive containment cooling system ancillary water storage tank includes a sufficient volume of water.	vi) See Tier 1 Material Table 2.2.2-3, items 8.a and 8.b for inspection, testing, and acceptance criteria for the volume of the passive containment cooling system ancillary water storage tank.
7c) The SFS provides check valves in the drain line from the refueling cavity to prevent flooding of the refueling cavity during containment flooding.	Exercise testing of the check valves with active safety-functions identified in Table 2.3.7-1 will be performed under pre-operational test pressure, temperature and flow conditions.	Each check valve changes position as indicated on Table 2.3.7-1.

Table 2.3.7-4 (cont.)
Inspections, Tests, Analyses, and Acceptance Criteria

Design Commitment	Inspections, Tests, Analyses	Acceptance Criteria
8. The SFS provides the nonsafety-related function of removing spent fuel decay heat using pumped flow through a heat exchanger.	i) Inspection will be performed for the existence of a report that determines the heat removal capability of the SFS heat exchangers. ii) Testing will be performed to confirm that each SFS pump provides flow through its heat exchanger when taking suction from the SFP and returning flow to the SFP.	i) A report exists and concludes that the heat transfer characteristic, UA, of each SFS heat exchanger is greater than or equal to 2.2 million Btu/hr-°F. ii) Each SFS pump produces at least 900 gpm through its heat exchanger.
9. Safety-related displays identified in Table 2.3.7-1 can be retrieved in the MCR.	Inspection will be performed for retrievability of the safety-related displays in the MCR.	Safety-related displays identified in Table 2.3.7-1 can be retrieved in the MCR.
10. Controls exist in the MCR to cause the pumps identified in Table 2.3.7-3 to perform their listed functions.	Testing will be performed to actuate the pumps identified in Table 2.3.7-3 using controls in the MCR.	Controls in the MCR cause pumps identified in Table 2.3.7-3 to perform the listed functions.
11. Displays of the SFS parameters identified in Table 2.3.7-3 can be retrieved in the MCR.	Inspection will be performed for retrievability in the MCR of the displays identified in Table 2.3.7-3.	Displays of the SFS parameters identified in Table 2.3.7-3 are retrieved in the MCR.

Table 2.3.7-5		
Component Name	**Tag No.**	**Component Location**
SFS Pump A	SFS-MP-01A	Auxiliary Building
SFS Pump B	SFS-MP-01B	Auxiliary Building
SFS Heat Exchanger A	SFS-ME-01A	Auxiliary Building
SFS Heat Exchanger B	SFS-ME-01B	Auxiliary Building

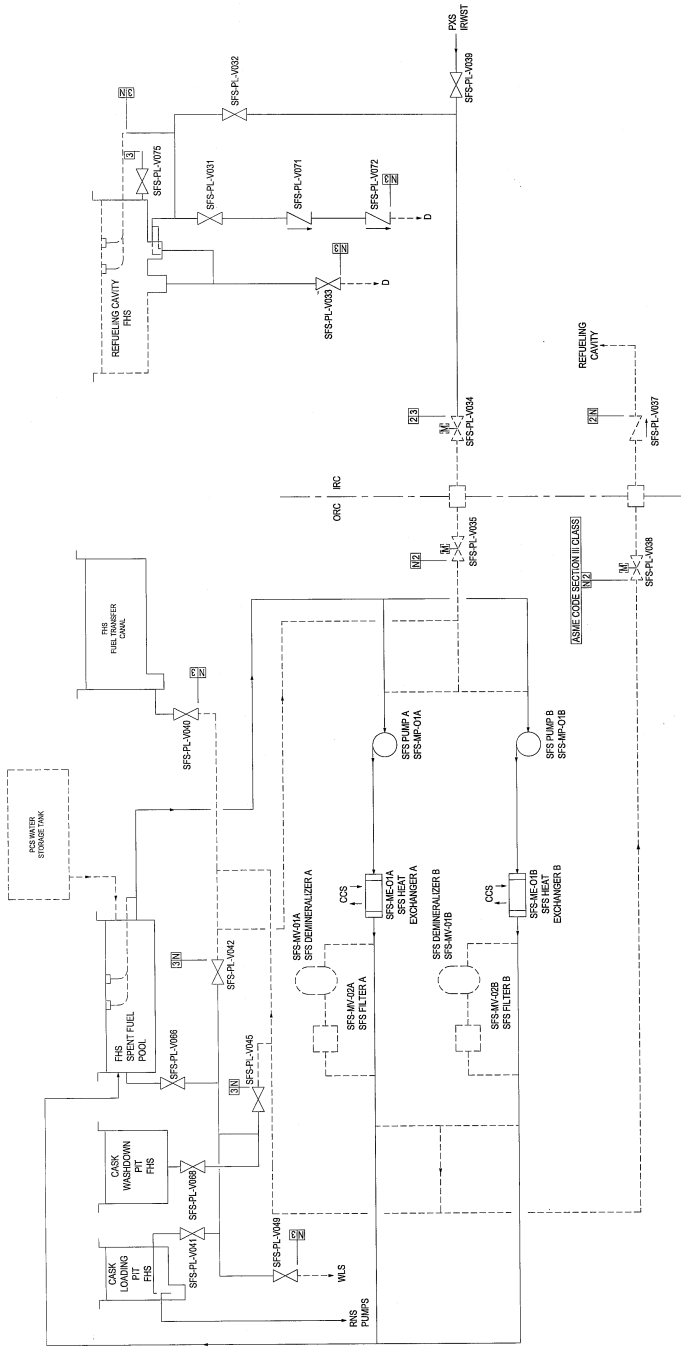

Figure 2.3.7-1
Spent Fuel Pool Cooling System

2.3.8 Service Water System

Design Description

The service water system (SWS) transfers heat from the component cooling water heat exchangers to the atmosphere. The SWS operates during normal modes of plant operation, including startup, power operation (full and partial loads), cooldown, shutdown, and refueling.

The SWS is as shown in Figure 2.3.8-1 and the component locations of the SWS are as shown Table 2.3.8-3.

1. The functional arrangement of the SWS is as described in the Design Description of this Section 2.3.8.

2. The SWS provides the nonsafety-related function of transferring heat from the component cooling water system (CCS) to the surrounding atmosphere to support plant shutdown and spent fuel pool cooling.

3. Controls exist in the main control room (MCR) to cause the components identified in Table 2.3.8-1 to perform the listed function.

4. Displays of the parameters identified in Table 2.3.8-1 can be retrieved in the MCR.

Inspections, Tests, Analyses, and Acceptance Criteria

Table 2.3.8-2 specifies the inspections, tests, analyses, and associated acceptance criteria for the SWS.

Table 2.3.8-1			
Equipment Name	**Tag No.**	**Display**	**Control Function**
Service Water Pump A (Motor)	SWS-MP-01A	Yes (Run Status)	Start
Service Water Pump B (Motor)	SWS-MP-01B	Yes (Run Status)	Start
Service Water Cooling Tower Fan A (Motor)	SWS-MA-01A	Yes (Run Status)	Start
Service Water Cooling Tower Fan B (Motor)	SWS-MA-01A	Yes (Run Status)	Start
Service Water Pump 1A Flow Sensor	SWS-004A	Yes	-
Service Water Pump 1B Flow Sensor	SWS-004B	Yes	-
Service Water Pump A Discharge Valve	SWS-PL-V002A	Yes (Valve Position)	Open
Service Water Pump B Discharge Valve	SWS-PL-V002B	Yes (Valve Position)	Open
Service Water Pump A Discharge Temperature Sensor	SWS-005A	Yes	-
Service Water Pump B Discharge Temperature Sensor	SWS-005B	Yes	-
Service Water Cooling Tower Basin Level	SWS-009	Yes	-

Note: Dash (-) indicates not applicable.

Table 2.3.8-2
Inspections, Tests, Analyses, and Acceptance Criteria

Design Commitment	Inspections, Tests, Analyses	Acceptance Criteria
1. The functional arrangement of the SWS is as described in the Design Description of this Section 2.3.8.	Inspection of the as-built system will be performed.	The as-built SWS conforms with the functional arrangement as described in the Design Description of this Section 2.3.8.
2. The SWS provides the nonsafety-related function of transferring heat from the component cooling water system to the surrounding atmosphere to support plant shutdown and spent fuel pool cooling.	i) Testing will be performed to confirm that the SWS can provide cooling water to the CCS heat exchangers. ii) Inspection will be performed for the existence of a report that determines the heat transfer capability of each cooling tower cell. iii) Testing will be performed to confirm that the SWS cooling tower basin has adequate reserve volume.	i) Each SWS pump can provide at least 10,000 gpm of cooling water through its CCS heat exchanger. ii) A report exists and concludes that the heat transfer rate of each cooling tower cell is greater than or equal to 170 million Btu/hr at a 80.1°F ambient wet bulb temperature and a cold water temperature of 90°F. iii) The SWS tower basin contains a usable volume of at least 230,000 gallons at the basin low level alarm setpoint.
3. Controls exist in the MCR to cause the components identified in Table 2.3.8-1 to perform the listed function.	Testing will be performed on the components in Table 2.3.8-1 using controls in the MCR.	Controls in the MCR operate to cause the components listed in Table 2.3.8-1 to perform the listed functions.
4. Displays of the parameters identified in Table 2.3.8-1 can be retrieved in the MCR.	Inspection will be performed for retrievability of parameters in the MCR.	The displays identified in Table 2.3.8-1 can be retrieved in the MCR.

Table 2.3.8-3		
Component Name	**Tag No.**	**Component Location**
Service Water Pump A	SWS-MP-01A	Turbine Building or yard
Service Water Pump B	SWS-MP-01B	Turbine Building or yard
Service Water Cooling Tower	SWS-ME-01	Yard

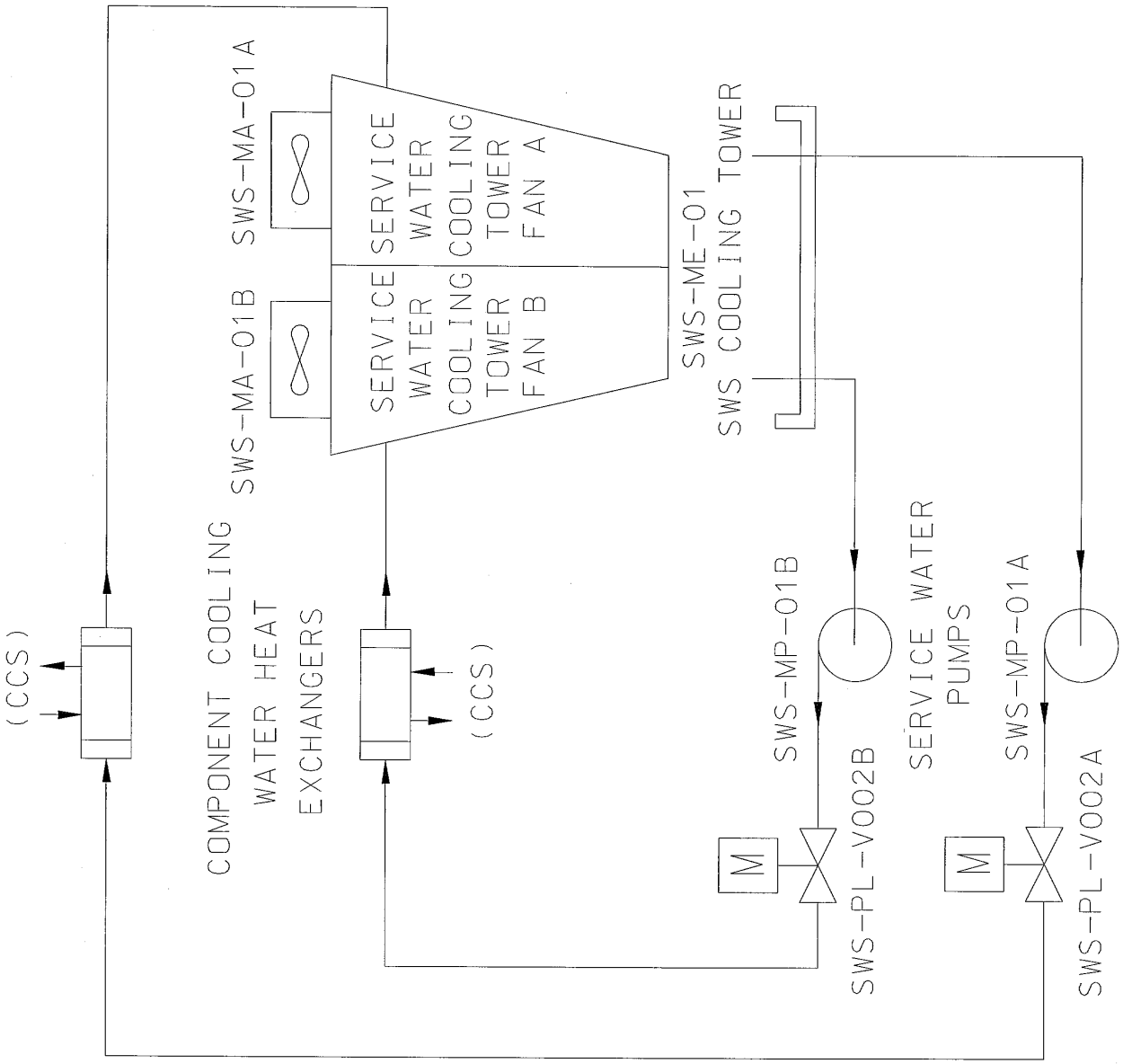

Figure 2.3.8-1
Service Water System

2.3.9 Containment Hydrogen Control System

Design Description

The containment hydrogen control system (VLS) limits hydrogen gas concentration in containment during accidents.

The VLS has catalytic hydrogen recombiners (VLS-MY-E01A and VLS-MY-E01B) that are located inside containment. The VLS has hydrogen igniters located as shown on Table 2.3.9-2.

1. The functional arrangement of the VLS is as described in the Design Description of this Section 2.3.9.

2. a) The hydrogen monitors identified in Table 2.3.9-1 are powered by the non-Class 1E dc and UPS system.

   b) The components identified in Table 2.3.9-2 are powered from their respective non-Class 1E power group.

3. The VLS provides the non-safety related function to control the containment hydrogen concentration for beyond design basis accidents.

4. a) Controls exist in the MCR to cause the components identified in Table 2.3.9-2 to perform the listed function.

   b) The components identified in Table 2.3.9-2 perform the listed function after receiving a manual signal from the diverse actuation system (DAS).

5. Displays of the parameters identified in Table 2.3.9-1 can be retrieved in the MCR.

Inspections, Tests, Analyses, and Acceptance Criteria

Table 2.3.9-3 specifies the inspections, tests, analyses, and associated acceptance criteria for the VLS.

Table 2.3.9-1		
Equipment	**Tag No.**	**Display**
Containment Hydrogen Monitor	VLS-001	Yes
Containment Hydrogen Monitor	VLS-002	Yes
Containment Hydrogen Monitor	VLS-003	Yes

Table 2.3.9-2

Equipment Name	Tag Number	Function	Power Group Number	Location	Room No.
Hydrogen Igniter 01	VLS-EH-01	Energize	1	Tunnel connection loop compartments	11204
Hydrogen Igniter 02	VLS-EH-02	Energize	2	Tunnel connection loop compartments	11204
Hydrogen Igniter 03	VLS-EH-03	Energize	1	Tunnel connection loop compartments	11204
Hydrogen Igniter 04	VLS-EH-04	Energize	2	Tunnel connection loop compartments	11204
Hydrogen Igniter 05	VLS-EH-05	Energize	1	Loop compartment 02	11402
Hydrogen Igniter 06	VLS-EH-06	Energize	2	Loop compartment 02	11502
Hydrogen Igniter 07	VLS-EH-07	Energize	2	Loop compartment 02	11402
Hydrogen Igniter 08	VLS-EH-08	Energize	1	Loop compartment 02	11502
Hydrogen Igniter 09	VLS-EH-09	Energize	1	In-containment refueling water storage tank (IRWST)	11305
Hydrogen Igniter 10	VLS-EH-10	Energize	2	IRWST	11305
Hydrogen Igniter 11	VLS-EH-11	Energize	2	Loop compartment 01	11401
Hydrogen Igniter 12	VLS-EH-12	Energize	1	Loop compartment 01	11501
Hydrogen Igniter 13	VLS-EH-13	Energize	1	Loop compartment 01	11401
Hydrogen Igniter 14	VLS-EH-14	Energize	2	Loop compartment 01	11501
Hydrogen Igniter 15	VLS-EH-15	Energize	2	IRWST	11305
Hydrogen Igniter 16	VLS-EH-16	Energize	1	IRWST	11305
Hydrogen Igniter 17	VLS-EH-17	Energize	2	Northeast valve room	11207
Hydrogen Igniter 18	VLS-EH-18	Energize	1	Northeast accumulator room	11207
Hydrogen Igniter 19	VLS-EH-19	Energize	2	East valve room	11208
Hydrogen Igniter 20	VLS-EH-20	Energize	2	Southeast accumulator room	11206
Hydrogen Igniter 21	VLS-EH-21	Energize	1	Southeast valve room	11206
Hydrogen Igniter 22	VLS-EH-22	Energize	1	Lower compartment area (core makeup tank [CMT] and valve area)	11400
Hydrogen Igniter 23	VLS-EH-23	Energize	2	Lower compartment area (CMT and valve area)	11400
Hydrogen Igniter 24	VLS-EH-24	Energize	2	Lower compartment area (CMT and valve area)	11400

Table 2.3.9-2 (cont.)

Equipment Name	Tag Number	Function	Power Group Number	Location	Room No.
Hydrogen Igniter 25	VLS-EH-25	Energize	2	Lower compartment area (CMT and valve area)	11400
Hydrogen Igniter 26	VLS-EH-26	Energize	2	Lower compartment area (CMT and valve area)	11400
Hydrogen Igniter 27	VLS-EH-27	Energize	1	Lower compartment area (CMT and valve area)	11400
Hydrogen Igniter 28	VLS-EH-28	Energize	1	Lower compartment area (CMT and valve area)	11400
Hydrogen Igniter 29	VLS-EH-29	Energize	1	Lower compartment area (CMT and valve area)	11400
Hydrogen Igniter 30	VLS-EH-30	Energize	2	Lower compartment area (CMT and valve area)	11400
Hydrogen Igniter 31	VLS-EH-31	Energize	1	Lower compartment area (CMT and valve area)	11400
Hydrogen Igniter 32	VLS-EH-32	Energize	1	Lower compartment area (CMT and valve area)	11400
Hydrogen Igniter 33	VLS-EH-33	Energize	2	North CVS equipment room	11209
Hydrogen Igniter 34	VLS-EH-34	Energize	1	North CVS equipment room	11209
Hydrogen Igniter 35	VLS-EH-35	Energize	1	IRWST	11305
Hydrogen Igniter 36	VLS-EH-36	Energize	2	IRWST	11305
Hydrogen Igniter 37	VLS-EH-37	Energize	1	IRWST	11305
Hydrogen Igniter 38	VLS-EH-38	Energize	2	IRWST	11305
Hydrogen Igniter 39	VLS-EH-39	Energize	1	Upper compartment lower region	11500
Hydrogen Igniter 40	VLS-EH-40	Energize	2	Upper compartment lower region	11500
Hydrogen Igniter 41	VLS-EH-41	Energize	2	Upper compartment lower region	11500
Hydrogen Igniter 42	VLS-EH-42	Energize	1	Upper compartment lower region	11500
Hydrogen Igniter 43	VLS-EH-43	Energize	1	Upper compartment lower region	11500
Hydrogen Igniter 44	VLS-EH-44	Energize	1	Upper compartment lower region	11500
Hydrogen Igniter 45	VLS-EH-45	Energize	2	Upper compartment lower region	11500
Hydrogen Igniter 46	VLS-EH-46	Energize	2	Upper compartment lower region	11500

Table 2.3.9-2 (cont.)

Equipment Name	Tag Number	Function	Power Group Number	Location	Room No.
Hydrogen Igniter 47	VLS-EH-47	Energize	1	Upper compartment lower region	11500
Hydrogen Igniter 48	VLS-EH-48	Energize	2	Upper compartment lower region	11500
Hydrogen Igniter 49	VLS-EH-49	Energize	1	Pressurizer compartment	11503
Hydrogen Igniter 50	VLS-EH-50	Energize	2	Pressurizer compartment	11503
Hydrogen Igniter 51	VLS-EH-51	Energize	1	Upper compartment mid-region	11500
Hydrogen Igniter 52	VLS-EH-52	Energize	2	Upper compartment mid-region	11500
Hydrogen Igniter 53	VLS-EH-53	Energize	2	Upper compartment mid-region	11500
Hydrogen Igniter 54	VLS-EH-54	Energize	1	Upper compartment mid-region	11500
Hydrogen Igniter 55	VLS-EH-55	Energize	1	Refueling cavity	11504
Hydrogen Igniter 56	VLS-EH-56	Energize	2	Refueling cavity	11504
Hydrogen Igniter 57	VLS-EH-57	Energize	2	Refueling cavity	11504
Hydrogen Igniter 58	VLS-EH-58	Energize	1	Refueling cavity	11504
Hydrogen Igniter 59	VLS-EH-59	Energize	2	Pressurizer compartment	11503
Hydrogen Igniter 60	VLS-EH-60	Energize	1	Pressurizer compartment	11503
Hydrogen Igniter 61	VLS-EH-61	Energize	1	Upper compartment-upper region	11500
Hydrogen Igniter 62	VLS-EH-62	Energize	2	Upper compartment-upper region	11500
Hydrogen Igniter 63	VLS-EH-63	Energize	1	Upper compartment-upper region	11500
Hydrogen Igniter 64	VLS-EH-64	Energize	2	Upper compartment-upper region	11500

Table 2.3.9-3
Inspections, Tests, Analyses, and Acceptance Criteria

Design Commitment	Inspections, Tests, Analyses	Acceptance Criteria
1. The functional arrangement of the VLS is as described in the Design Description of this Section 2.3.9.	Inspection of the as-built system will be performed.	The as-built VLS conforms with the functional arrangement as described in the Design Description of this Section 2.3.9.
2.a) The hydrogen monitors identified in Table 2.3.9-1 are powered by the non-Class 1E dc and UPS system.	Testing will be performed by providing a simulated test signal in each power group of the non-Class 1E dc and UPS system.	A simulated test signal exists at the hydrogen monitors identified in Table 2.3.9-1 when the non-Class 1E dc and UPS system is provided the test signal.
2.b) The components identified in Table 2.3.9-2 are powered from their respective non-Class 1E power group.	Testing will be performed by providing a simulated test signal in each non-Class 1E power group.	A simulated test signal exists at the equipment identified in Table 2.3.9-2 when the assigned non-Class 1E power group is provided the test signal.
3. The VLS provides the nonsafety-related function to control the containment hydrogen concentration for beyond design basis accidents.	i) Inspection for the number of igniters will be performed. ii) Operability testing will be performed on the igniters. iii) An inspection of the as-built containment internal structures will be performed. iv) An inspection will be performed of the as-built IRWST vents that are located in the roof of the IRWST along the side of the IRWST next to the containment shell.	i) At least 64 hydrogen igniters are provided inside containment at the locations specified in Table 2.3.9-2. ii) The surface temperature of the igniter exceeds 1700°F. iii) The minimum distance between the primary openings through the ceilings of the passive core cooling system valve/accumulator rooms (11206, 11207) and the containment shell is at least 19 feet. Primary openings are those that constitute 98% of the opening area. Other openings through the ceilings of these rooms must be at least 3 feet from the containment shell. iv) The discharge from each of these IRWST vents is oriented generally away from the containment shell.
4.a) Controls exist in the MCR to cause the components identified in Table 2.3.9-2 to perform the listed function.	Testing will be performed on the igniters using the controls in the MCR.	Controls in the MCR operate to energize the igniters.

Table 2.3.9-3 (cont.)
Inspections, Tests, Analyses, and Acceptance Criteria

Design Commitment	Inspections, Tests, Analyses	Acceptance Criteria
4.b) The components identified in Table 2.3.9-2 perform the listed function after receiving manual a signal from DAS.	Testing will be performed on the igniters using the DAS controls.	The igniters energize after receiving a signal from DAS.
5. Displays of the parameters identified in Table 2.3.9-1 can be retrieved in the MCR.	Inspection will be performed for retrievability of the displays identified in Table 2.3.9-1 in the MCR.	Displays identified in Table 2.3.9-1 can be retrieved in the MCR.

2.3.10 Liquid Radwaste System

Design Description

The liquid radwaste system (WLS) receives, stores, processes, samples and monitors the discharge of radioactive wastewater.

The WLS has components which receive and store radioactive or potentially radioactive liquid waste. These are the reactor coolant drain tank, the containment sump, the effluent holdup tanks and the waste holdup tanks. The WLS components store and process the waste during normal operation and during anticipated operational occurrences. Monitoring of the liquid waste is performed prior to discharge.

The WLS is as shown in Figure 2.3.10-1 and the component locations of the WLS are as shown in Table 2.3.10-5.

1. The functional arrangement of the WLS is as described in the Design Description of this Section 2.3.10.

2. a) The components identified in Table 2.3.10-1 as ASME Code Section III are designed and constructed in accordance with ASME Code Section III requirements.

   b) The piping identified in Table 2.3.10-2 as ASME Code Section III is designed and constructed in accordance with ASME Code Section III requirements.

3. a) Pressure boundary welds in components identified in Table 2.3.10-1 as ASME Code Section III meet ASME Code Section III requirements.

   b) Pressure boundary welds in piping identified in Table 2.3.10-2 as ASME Code Section III meet ASME Code Section III requirements.

4. a) The components identified in Table 2.3.10-1 as ASME Code Section III retain their pressure boundary integrity at their design pressure.

   b) The piping identified in Table 2.3.10-2 as ASME Code Section III retains its pressure boundary integrity at its design pressure.

5. a) The seismic Category I equipment identified in Table 2.3.10-1 can withstand seismic design basis loads without loss of safety function.

   b) Each of the lines identified in Table 2.3.10-2 for which functional capability is required is designed to withstand combined normal and seismic design basis loads without a loss of its functional capability.

6. The WLS provides the following safety-related functions:

   a) The WLS preserves containment integrity by isolation of the WLS lines penetrating the containment.

   b) Check valves in drain lines to the containment sump limit cross flooding of compartments.

7. The WLS provides the nonsafety-related functions of:

   a) Detecting leaks within containment to the containment sump.

   b) Controlling releases of radioactive materials in liquid effluents.

8. Controls exist in the main control room (MCR) to cause the remotely operated valve identified in Table 2.3.10-3 to perform its active function.

9. The check valves identified in Table 2.3.10-1 perform an active safety-related function to change position as indicated in the table.

10. Displays of the parameters identified in Table 2.3.10-3 can be retrieved in the MCR.

Inspections, Tests, Analyses, and Acceptance Criteria

Table 2.3.10-4 specifies the inspections, tests, analyses, and associated acceptance criteria for the WLS.

Table 2.3.10-1

Equipment Name	Tag No.	ASME Code Section III	Seismic Cat. I	Remotely Operated Valve	Class 1E/ Qual. for Harsh Envir.	Safety-Related Display	Active Function
WLS Containment Sump Level Sensor	WLS-LT-034	No	Yes	No	No/No	No	-
WLS Containment Sump Level Sensor	WLS-LT-035	No	Yes	No	No/No	No	-
WLS Containment Sump Level Sensor	WLS-LT-036	No	Yes	No	No/No	No	-
WLS Drain from Passive Core Cooling System (PXS) Compartment A (Room 11206) Check Valve	WLS-PL-V071B	Yes	Yes	No	-/-	No	Transfer Closed
WLS Drain from PXS Compartment A (Room 11206) Check Valve	WLS-PL-V072B	Yes	Yes	No	-/-	No	Transfer Closed
WLS Drain from PXS Compartment B (Room 11207) Check Valve	WLS-PL-V071C	Yes	Yes	No	-/-	No	Transfer Closed
WLS Drain from PXS Compartment B (Room 11207) Check Valve	WLS-PL-V072C	Yes	Yes	No	-/-	No	Transfer Closed
WLS Drain from Chemical and Volume Control System (CVS) Compartment (Room 11209) Check Valve	WLS-PL-V071A	Yes	Yes	No	-/-	No	Transfer Closed
WLS Drain from CVS Compartment (Room 11209) Check Valve	WLS-PL-V072A	Yes	Yes	No	-/-	No	Transfer Closed

Note: Dash (-) indicates not applicable.

Table 2.3.10-2			
Line Name	**Line No.**	**ASME Section III**	**Functional Capability Required**
WLS Drain from PXS Compartment A	WLS-PL-L062 WLS-PL-L078	Yes	Yes
WLS Drain from PXS Compartment B	WLS-PL-L063 WLS-PL-L079	Yes	Yes
WLS Drain from CVS Compartment	WLS-PL-L061 WSL-PL-L077 WLS-PL-L020	Yes	Yes

Table 2.3.10-3			
Equipment Name	**Tag No.**	**Display**	**Control Function**
WLS Effluent Discharge Isolation Valve	WLS-PL-V223	-	Close
Reactor Coolant Drain Tank Level	WLS-JE-LT002	Yes	-
Letdown Flow from CVS to WLS	WLS-JE-FT020	Yes	-

Table 2.3.10-4
Inspections, Tests, Analyses, and Acceptance Criteria

Design Commitment	Inspections, Tests, Analyses	Acceptance Criteria
1. The functional arrangement of the WLS is as described in the Design Description of this Section 2.3.10.	Inspection of the as-built system will be performed.	The as-built WLS conforms with the functional arrangement as described in the Design Description of this Section 2.3.10.
2.a) The components identified in Table 2.3.10-1 as ASME Code Section III are designed and constructed in accordance with ASME Code Section III requirements.	Inspection will be conducted of the as-built components as documented in the ASME design reports.	The ASME Code Section III design report exists for the as built components identified in Table 2.3.10-1 as ASME Code Section III.
2.b) The piping identified in Table 2.3.10-2 as ASME Code Section III is designed and constructed in accordance with ASME Code Section III requirements.	Inspection will be conducted of the as-built piping as documented in the ASME design reports.	The ASME Code Section III design reports exist for the as-built piping identified in Table 2.3.10-2 as ASME Code Section III.
3.a) Pressure boundary welds in components identified in Table 2.3.10-1 as ASME Code Section III meet ASME Code Section III requirements.	Inspection of the as-built pressure boundary welds will be performed in accordance with the ASME Code Section III.	A report exists and concludes that the ASME Code Section III requirements are met for non-destructive examination of pressure boundary welds.
3.b) Pressure boundary welds in piping identified in Table 2.3.10-2 as ASME Code Section III meet ASME Code Section III requirements.	Inspection of the as-built pressure boundary welds will be performed in accordance with the ASME Code Section III.	A report exists and concludes that the ASME Code Section III requirements are met for non-destructive examination of pressure boundary welds.
4.a) The components identified in Table 2.3.10-1 as ASME Code Section III retain their pressure boundary integrity at their design pressure.	A hydrostatic test will be performed on the components required by the ASME Code Section III to be hydrostatically tested.	A report exists and concludes that the results of the hydrostatic test of the components identified in Table 2.3.10-1 as ASME Code Section III conform with the requirements of the ASME Code Section III.
4.b) The piping identified in Table 2.3.10-2 as ASME Code Section III retains its pressure boundary integrity at its design pressure.	A hydrostatic test will be performed on the piping required by the ASME Code Section III to be hydrostatically tested.	A report exists and concludes that the results of the hydrostatic test of the piping identified in Table 2.3.10-2 as ASME Code Section III conform with the requirements of the ASME Code Section III.

Table 2.3.10-4 (cont.)
Inspections, Tests, Analyses, and Acceptance Criteria

Design Commitment	Inspections, Tests, Analyses	Acceptance Criteria
5.a) The seismic Category I equipment identified in Table 2.3.10-1 can withstand seismic design basis loads without loss of safety function.	i) Inspection will be performed to verify that the seismic Category I equipment identified in Table 2.3.10-1 is located on the Nuclear Island. ii) Type tests, analyses, or a combination of type tests and analyses of seismic Category I equipment will be performed. iii) Inspection will be performed for the existence of a report verifying that the as-built equipment including anchorage is seismically bounded by the tested or analyzed conditions.	i) The seismic Category I equipment identified in Table 2.3.10-1 is located on the Nuclear Island. ii) A report exists and concludes that the seismic Category I equipment can withstand seismic design basis loads without loss of safety function. iii) A report exists and concludes that the as-built equipment including anchorage is seismically bounded by the tested or analyzed conditions.
5.b) Each of the lines identified in Table 2.3.10-2 for which functional capability is required is designed to withstand combined normal and seismic design basis loads without a loss of its functional capability.	Inspection will be performed for the existence of a report verifying that the as-built piping meets the requirements for functional capability.	A report exists and concludes that each of the as-built lines identified in Table 2.3.10-2 for which functional capability is required meets the requirements for functional capability.
6.a) The WLS preserves containment integrity by isolation of the WLS lines penetrating the containment.	See Tier 1 Material, Table 2.2.1-3, items 1 and 7.	See Tier 1 Material, Table 2.2.1-3, items 1 and 7.
6.b) Check valves in drain lines to the containment sump limit cross flooding of compartments.	Refer to item 9 in this table.	Refer to item 9 in this table.

Table 2.3.10-4 (cont.)
Inspections, Tests, Analyses, and Acceptance Criteria

Design Commitment	Inspections, Tests, Analyses	Acceptance Criteria
7.a) The WLS provides the nonsafety-related function of detecting leaks within containment to the containment sump.	i) Inspection will be performed for retrievability of the displays of containment sump level channels WLS-LT-034, WLS-LT-035, and WLS-LT-036 in the MCR. ii) Testing will be performed by adding water to the sump and observing display of sump level.	i) Nonsafety-related displays of WLS containment sump level channels WLS-LT-034, WLS-LT-035, and WLS-LT-036 can be retrieved in the MCR. ii) A report exists and concludes that sump level channels WLS-LT-034, WLS-LT-035, and WLS-LT-036 can detect a change of 1.75 ± 0.1 inches.
7.b) The WLS provides the nonsafety-related function of controlling releases of radioactive materials in liquid effluents.	Tests will be performed to confirm that a simulated high radiation signal from the discharge radiation monitor, WLS-RE-229, causes the discharge isolation valve WLS-PL-V223 to close.	A simulated high radiation signal causes the discharge control isolation valve WLS-PL-V223 to close.
8. Controls exist in the MCR to cause the remotely operated valve identified in Table 2.3.10-3 to perform its active function.	Stroke testing will be performed on the remotely operated valve listed in Table 2.3.10-3 using controls in the MCR.	Controls in the MCR operate to cause the remotely operated valve to perform its active function.
9. The check valves identified in Table 2.3.10-1 perform an active safety-related function to change position as indicated in the table.	Exercise testing of the check valves with active safety functions identified in Table 2.3.10-1 will be performed under pre-operational test pressure, temperature and flow conditions.	Each check valve changes position as indicated on Table 2.3.10-1.
10. Displays of the parameters identified in Table 2.3.10-3 can be retrieved in the MCR.	Inspection will be performed for retrievability of the displays identified in Table 2.3.10-3 in the MCR.	Displays identified in Table 2.3.10-3 can be retrieved in the MCR.

Table 2.3.10-5

Component Name	Tag No.	Component Location
WLS Reactor Coolant Drain Tank	WLS-MT-01	Containment
WLS Containment Sump	WLS-MT-02	Containment
WLS Degasifier Column	WLS-MV-01	Auxiliary Building
WLS Effluent Holdup Tanks	WLS-MT-05A WLS-MT-05B	Auxiliary Building
WLS Waste Holdup Tanks	WLS-MT-06A WLS-MT-06B	Auxiliary Building
WLS Waste Pre-Filter	WLS-MV-06	Auxiliary Building
WLS Ion Exchangers	WLS-MV-03 WLS-MV-04A WLS-MV-04B WLS-MV-04C	Auxiliary Building
WLS Waste After-Filter	WLS-MV-07	Auxiliary Building
WLS Monitor Tanks	WLS-MT-07A WLS-MT-07B WLS-MT-07C	Auxiliary Building
	WLS-MT-07D WLS-MT-07E WLS-MT-07F	Radwaste Building

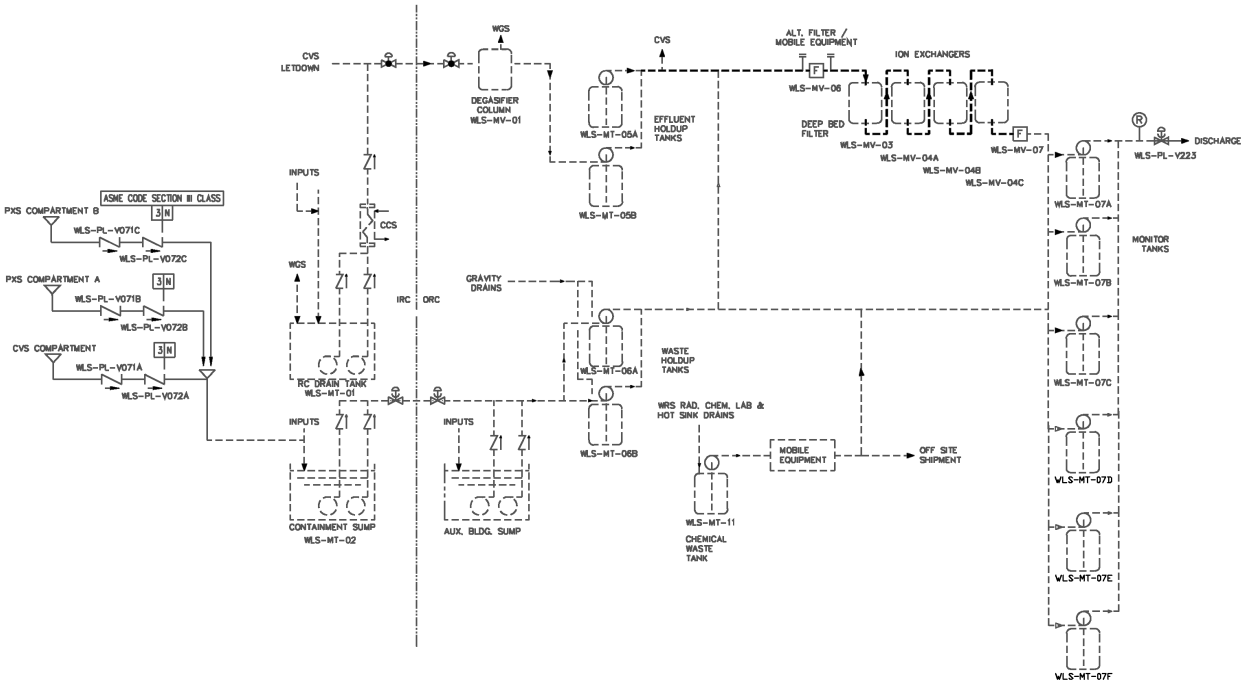

Figure 2.3.10-1
Liquid Radwaste System

2.3.11 Gaseous Radwaste System

Design Description

The gaseous radwaste system (WGS) receives, processes, and discharges the radioactive waste gases received within acceptable off-site release limits during normal modes of plant operation including power generation, shutdown and refueling.

The WGS is as shown in Figure 2.3.11-1 and the component locations of the WGS are as shown in Table 2.3.11-3.

1. The functional arrangement of the WGS is as described in the Design Description of this Section 2.3.11.

2. The equipment identified in Table 2.3.11-1 can withstand the appropriate seismic design basis loads without loss of its structural integrity function.

3. The WGS provides the nonsafety-related functions of:

   a) Processing radioactive gases prior to discharge.

   b) Controlling the releases of radioactive materials in gaseous effluents.

   c) The WGS is purged with nitrogen on indication of high oxygen levels in the system.

Inspections, Tests, Analyses, and Acceptance Criteria

Table 2.3.11-2 specifies the inspections, tests, analyses, and associated acceptance criteria for the WGS.

Table 2.3.11-1		
Equipment Name	**Tag No.**	**Seismic Category I**
WGS Activated Carbon Delay Bed A	WGS-MV-02A	No(1)
WGS Activated Carbon Delay Bed B	WGS-MV-02B	No(1)
WGS Discharge Isolation Valve	WGS-PL-V051	No

Note:

1. The WGS activated carbon delay beds (WGS-MV-02A and B) are designed to one-half SSE.

Table 2.3.11-2
Inspections, Tests, Analyses, and Acceptance Criteria

Design Commitment	Inspections, Tests, Analyses	Acceptance Criteria
1. The functional arrangement of the WGS is as described in the Design Description of this Section 2.3.11.	Inspection of the as-built system will be performed.	The as-built WGS conforms with the functional arrangement as described in the Design Description of this Section 2.3.11.
2. The equipment identified as having seismic design requirements in Table 2.3.11-1 can withstand seismic design basis loads without loss of its structural integrity function.	i) Inspection will be performed to verify that the equipment identified as having seismic design requirements in Table 2.3.11-1 is located on the Nuclear Island. ii) Type tests, analyses, or a combination of type tests and analyses of seismically designed equipment will be performed. iii) Inspection will be performed for the existence of a report verifying that the as-built equipment including anchorage is seismically bounded by the tested or analyzed conditions.	i) The equipment identified as having seismic design requirements in Table 2.3.11-1 is located on the Nuclear Island. ii) A report exists and concludes that the seismically designed equipment can withstand appropriate seismic design basis loads without loss of its structural integrity function. iii) A report exists and concludes that the as-built equipment including anchorage is seismically bounded by the tested or analyzed conditions.
3.a) The WGS provides the nonsafety-related function of processing radioactive gases prior to discharge.	Inspection will be performed to verify the contained volume of each of the activated carbon delay beds, WGS-MV02A and WGS-MV02B.	A report exists and concludes that the contained volume in each of the activated carbon delay beds, WGS-MV02A and WGS-MV02B, is at least 80 ft^3.
3.b) The WGS provides the nonsafety-related function of controlling the releases of radioactive materials in gaseous effluents.	Tests will be performed to confirm that the presence of a simulated high radiation signal from the discharge radiation monitor, WGS-017, causes the discharge control isolation valve WGS-PL-V051 to close.	A simulated high radiation signal causes the discharge control isolation valve WGS-PL-V051 to close.
3.c) The WGS is purged with nitrogen on indication of high oxygen levels in the system.	Tests will be performed to confirm that the presence of a simulated high oxygen level signal from the oxygen monitors (WGS-025A, -025B) causes the nitrogen purge valve (WGS-PL-V002) to open and the WLS degasifier vacuum pumps (WLS-MP-03A, -03B) to stop.	A simulated high oxygen level signal causes the nitrogen purge valve (WGS-PL-V002) to open and the WLS degasifier vacuum pumps (WLS-MP-03A, -03B) to stop.

Table 2.3.11-3		
Equipment Name	**Tag No.**	**Component Location**
WGS Gas Cooler	WGS-ME-01	Auxiliary Building
WGS Moisture Separator	WGS-MV-03	Auxiliary Building
WGS Activated Carbon Delay Bed A	WGS-MV-02A	Auxiliary Building
WGS Activated Carbon Delay Bed B	WGS-MV-02B	Auxiliary Building

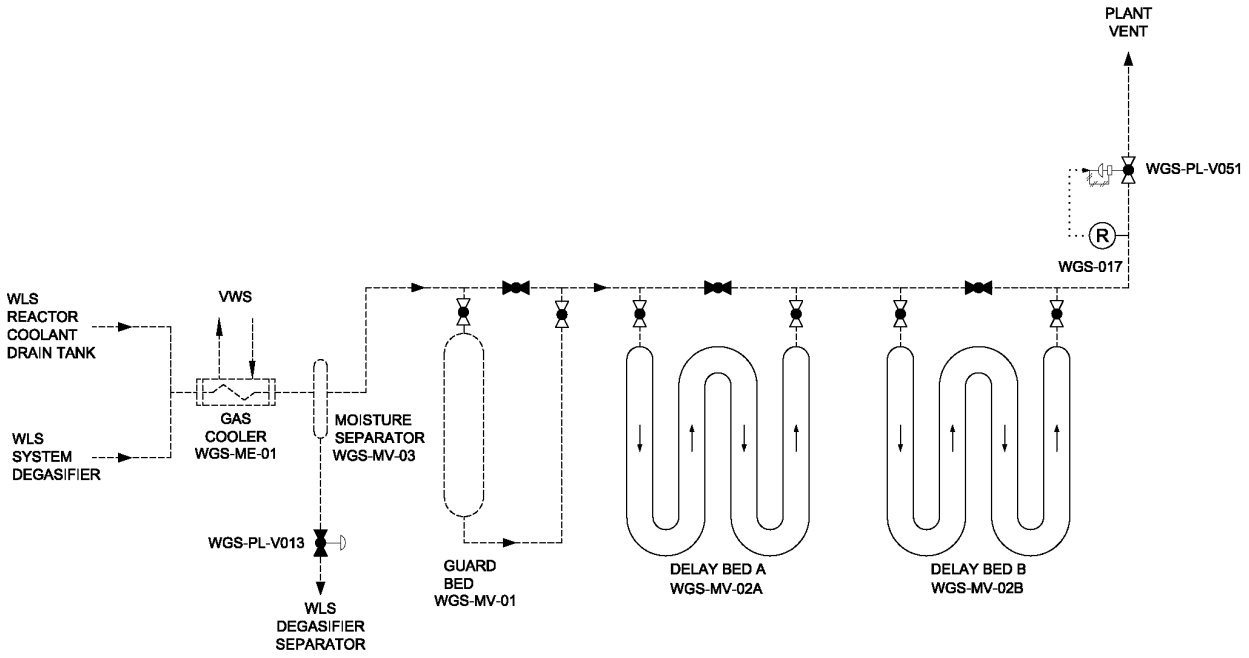

Figure 2.3.11-1
Gaseous Radwaste System

2.3.12 Solid Radwaste System

Design Description

The solid radwaste system (WSS) receives, collects, and stores the solid radioactive wastes received prior to their processing and packaging by mobile equipment for shipment off-site.

The component locations of the WSS are as shown in Table 2.3.12-2.

1. The functional arrangement of the WSS is as described in the Design Description of this Section 2.3.12.

2. The WSS provides the nonsafety-related function of storing radioactive spent resins prior to processing or shipment.

Table 2.3.12-1
Inspections, Tests, Analyses, and Acceptance Criteria

Design Commitment	Inspections, Tests, Analyses	Acceptance Criteria
1. The functional arrangement of the WSS is as described in the Design Description of this Section 2.3.12.	Inspection of the as-built system will be performed.	The as-built WSS conforms with the functional arrangement as described in the Design Description of this Section 2.3.12.
2. The WSS provides the nonsafety-related function of storing radioactive solids prior to processing or shipment.	Inspection will be performed to verify that the volume of each of the spent resin tanks, WSS-MV01A and WSS-MV01B, is at least 250 ft^3.	A report exists and concludes that the volume of each of the spent resin tanks, WSS-MV01A and WSS-MV01B, is at least 250 ft^3.

Table 2.3.12-2

Component Name	Tag No.	Component Location
WSS Spent Resin Tank A	WSS-MV-01A	Auxiliary Building
WSS Spent Resin Tank B	WSS-MV-01B	Auxiliary Building

2.3.13 Primary Sampling System

The primary sampling system collects samples of fluids in the reactor coolant system (RCS) and the containment atmosphere during normal operations.

The PSS is as shown in Figure 2.3.13-1. The PSS Grab Sampling Unit (PSS-MS-01) is located in the Auxiliary Building.

1. The functional arrangement of the PSS is as described in the Design Description of this Section 2.3.13.

2. The components identified in Table 2.3.13-1 as ASME Code Section III are designed and constructed in accordance with ASME Code Section III requirements.

3. Pressure boundary welds in components identified in Table 2.3.13-1 as ASME Code Section III meet ASME Code Section III requirements.

4. The components identified in Table 2.3.13-1 as ASME Code Section III retain their pressure boundary integrity at their design pressure.

5. The seismic Category I equipment identified in Table 2.3.13-1 can withstand seismic design basis loads without loss of safety function.

6. a) The Class 1E equipment identified in Table 2.3.13-1 as being qualified for a harsh environment can withstand the environmental conditions that would exist before, during, and following a design basis accident without loss of their safety function, for the time required to perform the safety function.

   b) The Class 1E components identified in Table 2.3.13-1 are powered from their respective Class 1E division.

   c) Separation is provided between PSS Class 1E divisions, and between Class 1E divisions and non-Class 1E divisions.

7. The PSS provides the safety-related function of preserving containment integrity by isolation of the PSS lines penetrating the containment.

8. The PSS provides the nonsafety-related function of providing the capability of obtaining reactor coolant and containment atmosphere samples.

9. Safety-related displays identified in Table 2.3.13-1 can be retrieved in the MCR.

10. a) Controls exist in the MCR to cause those remotely operated valves identified in Table 2.3.13-1 to perform active functions.

    b) The valves identified in Table 2.3.13-1 as having protection and safety monitoring system (PMS) control perform an active function after receiving a signal from the PMS.

11. a) The check valve identified in Table 2.3.13-1 perform an active safety-related function to change position as indicated in the table.

    b) After loss of motive power, the remotely operated valves identified in Table 2.3.13-1 assume the indicated loss of motive power position.

12. Controls exist in the MCR to cause the valves identified in Table 2.3.13-2 to perform the listed function.

Inspections, Tests, Analyses, and Acceptance Criteria

Table 2.3.13-3 specifies the inspections, tests, analyses, and associated acceptance criteria for the PSS.

Table 2.3.13-1

Equipment Name	Tag No.	ASME Code Section III	Seismic Cat. I	Remotely Operated Valve	Class 1E/ Qual. for Harsh Envir.	Safety-Related Display	Control PMS/DAS	Active Function	Loss of Motive Power Position
Liquid Sample Line Containment Isolation Valve Outside Reactor Containment (ORC)	PSS-PL-V011	Yes	Yes	Yes	Yes/No	Yes (Valve Position)	Yes/No	Transfer Closed	Closed
Liquid Sample Line Containment Isolation Valve Inside Reactor Containment (IRC)	PSS-PL-V010A	Yes	Yes	Yes	Yes/Yes	Yes (Valve Position)	Yes/No	Transfer Closed	Closed
Liquid Sample Line Containment Isolation Valve IRC	PSS-PL-V010B	Yes	Yes	Yes	Yes/Yes	Yes (Valve Position)	Yes/No	Transfer Closed	Closed
Containment Air Sample Containment Isolation Valve IRC	PSS-PL-V008	Yes	Yes	Yes	Yes/Yes	Yes (Valve Position)	Yes/No	Transfer Closed	Closed
Air Sample Line Containment Isolation Valve ORC	PSS-PL-V046	Yes	Yes	Yes	Yes/No	Yes (Valve Position)	Yes/No	Transfer Closed	Closed
Sample Return Line Containment Isolation Valve ORC	PSS-PL-V023	Yes	Yes	Yes	Yes/No	Yes (Valve Position)	Yes/No	Transfer Closed	Closed
Sample Return Containment Isolation Check Valve IRC	PSS-PL-V024	Yes	Yes	No	-/-	No	-/-	Transfer Closed	Closed

Note: A dash (-) indicates not applicable.

Table 2.3.13-2		
Equipment Name	**Tag No.**	**Control Function**
Reactor Coolant System (RCS) Sample Isolation Valve A	PSS-PL-V001A	Transfer Open/Transfer Closed
RCS Sample Isolation Valve B	PSS-PL-V001B	Transfer Open/Transfer Closed

Table 2.3.13-3
Inspections, Tests, Analyses, and Acceptance Criteria

Design Commitment	Inspections, Tests, Analyses	Acceptance Criteria
1. The functional arrangement of the PSS is as described in the Design Description of this Section 2.3.13.	Inspection of the as-built system will be performed.	The as-built PSS conforms with the functional arrangement as described in the Design Description of this Section 2.3.13.
2. The components identified in Table 2.3.13-1 as ASME Code Section III are designed and constructed in accordance with ASME Code Section III requirements.	Inspection will be conducted of the as-built components as documented in the ASME design reports.	The ASME Code Section III design reports exist for the as-built components identified in Table 2.3.13-1 as ASME Code Section III.
3. Pressure boundary welds in components identified in Table 2.3.13-1 as ASME Code Section III meet ASME Code Section III requirements.	Inspection of the as-built pressure boundary welds will be performed in accordance with the ASME Code Section III.	A report exists and concludes that the ASME Code Section III requirements are met for non-destructive examination of pressure boundary welds.
4. The components identified in Table 2.3.13-1 as ASME Code Section III retain their pressure boundary integrity at their design pressure.	A hydrostatic test will be performed on the components required by the ASME Code Section III to be hydrostatically tested.	A report exists and concludes that the results of the hydrostatic test of the components identified in Table 2.3.13-1 as ASME Code Section III conform with the requirements of the ASME Code Section III.
5. The seismic Category I equipment identified in Table 2.3.13-1 can withstand seismic design basis loads without loss of its safety function.	i) Inspection will be performed to verify that the seismic Category I equipment and valves identified in Table 2.3.13-1 are located on the Nuclear Island. ii) Type tests, analyses, or a combination of type tests and analyses of seismic Category I equipment will be performed. iii) Inspection will be performed for the existence of a report verifying that the as-built equipment including anchorage is seismically bounded by the tested or analyzed conditions.	i) The seismic Category I equipment identified in Table 2.3.13-1 is located on the Nuclear Island. ii) A report exists and concludes that the seismic Category I equipment can withstand seismic design basis loads without loss of safety function. iii) A report exists and concludes that the as-built equipment including anchorage is seismically bounded by the tested or analyzed conditions.

Table 2.3.13-3 (cont.)
Inspections, Tests, Analyses, and Acceptance Criteria

Design Commitment	Inspections, Tests, Analyses	Acceptance Criteria
6.a) The Class 1E equipment identified in Tables 2.3.13-1 as being qualified for a harsh environment can withstand the environmental conditions that would exist before, during, and following a design basis accident without loss of their safety function, for the time required to perform the safety function.	i) Type tests, analyses, or a combination of type tests and analyses will be performed on Class 1E equipment located in a harsh environment.	i) A report exists and concludes that the Class 1E equipment identified in Table 2.3.13-1 as being qualified for a harsh environment can withstand the environmental conditions that would exist before, during, and following a design basis accident without loss of its safety function for the time required to perform the safety function.
	ii) Inspection will be performed of the as-built Class 1E equipment and the associated wiring, cables, and terminations located in a harsh environment.	ii) A report exists and concludes that the as-built Class 1E equipment and the associated wiring, cables, and terminations identified in Table 2.3.13-1 as being qualified for a harsh environment are bounded by type tests, analyses, or a combination of type tests and analyses.
6.b) The Class 1E components identified in Table 2.3.13-1 are powered from their respective Class 1E division.	Testing will be performed on the PSS by providing a simulated test signal in each Class 1E division.	A simulated test signal exists at the Class 1E equipment identified in Table 2.3.13-1 when the assigned Class 1E division is provided the test signal.
6.c) Separation is provided between PSS Class 1E divisions, and between Class 1E divisions and non-Class 1E divisions.	See Tier 1 Material, Table 3.3-6, item 7.d.	See Tier 1 Material, Table 3.3-6, item 7.d.
7. The PSS provides the safety-related function of preserving containment integrity by isolation of the PSS lines penetrating the containment.	See Tier 1 Material, Table 2.2.1-3, item 7.	See Tier 1 Material, Table 2.2.1-3, item 7.
8. The PSS provides the nonsafety-related function of providing the capability of obtaining reactor coolant and containment atmosphere samples.	Testing will be performed to obtain samples of the reactor coolant and containment atmosphere.	A sample is drawn from the reactor coolant and the containment atmosphere.
9. Safety-related displays identified in Table 2.3.13-1 can be retrieved in the MCR.	Inspection will be performed for retrievability of the safety-related displays in the MCR.	The safety-related displays identified in Table 2.3.13-1 can be retrieved in the MCR.

Table 2.3.13-3 (cont.)
Inspections, Tests, Analyses, and Acceptance Criteria

Design Commitment	Inspections, Tests, Analyses	Acceptance Criteria
10.a) Controls exist in the MCR to cause those remotely operated valves identified in Table 2.3.13-1 to perform active functions.	Stroke testing will be performed on the remotely operated valves identified in Table 2.3.13-1 using the controls in the MCR.	Controls in the MCR operate to cause those remotely operated valves identified in Table 2.3.13-1 to perform active functions.
10.b) The valves identified in Table 2.3.13-1 as having PMS control perform an active function after receiving a signal from the PMS.	Testing will be performed on remotely operated valves listed in Table 2.3.13-1 using real or simulated signals into the PMS.	The remotely operated valves identified in Table 2.3.13-1 as having PMS control perform the active function identified in the table after receiving a signal from the PMS.
11.a) The check valve identified in Table 2.3.13-1 performs an active safety-related function to change position as indicated in the table.	Exercise testing of the check valve with an active safety function identified in Table 2.3.13-1 will be performed under preoperational test pressure, temperature, and fluid flow conditions.	The check valve changes position as indicated in Table 2.3.13-1.
11.b) After loss of motive power, the remotely operated valves identified in Table 2.3.13-1 assume the indicated loss of motive power position.	Testing of the remotely operated valves will be performed under the conditions of loss of motive power.	After loss of motive power, each remotely operated valve identified in Table 2.3.13-1 assumes the indicated loss of motive power position.
12. Controls exist in the MCR to cause the valves identified in Table 2.3.13-2 to perform the listed function.	Testing will be performed on the components in Table 2.3.13-2 using controls in the MCR.	Controls in the MCR cause valves identified in Table 2.3.13-2 to perform the listed functions.

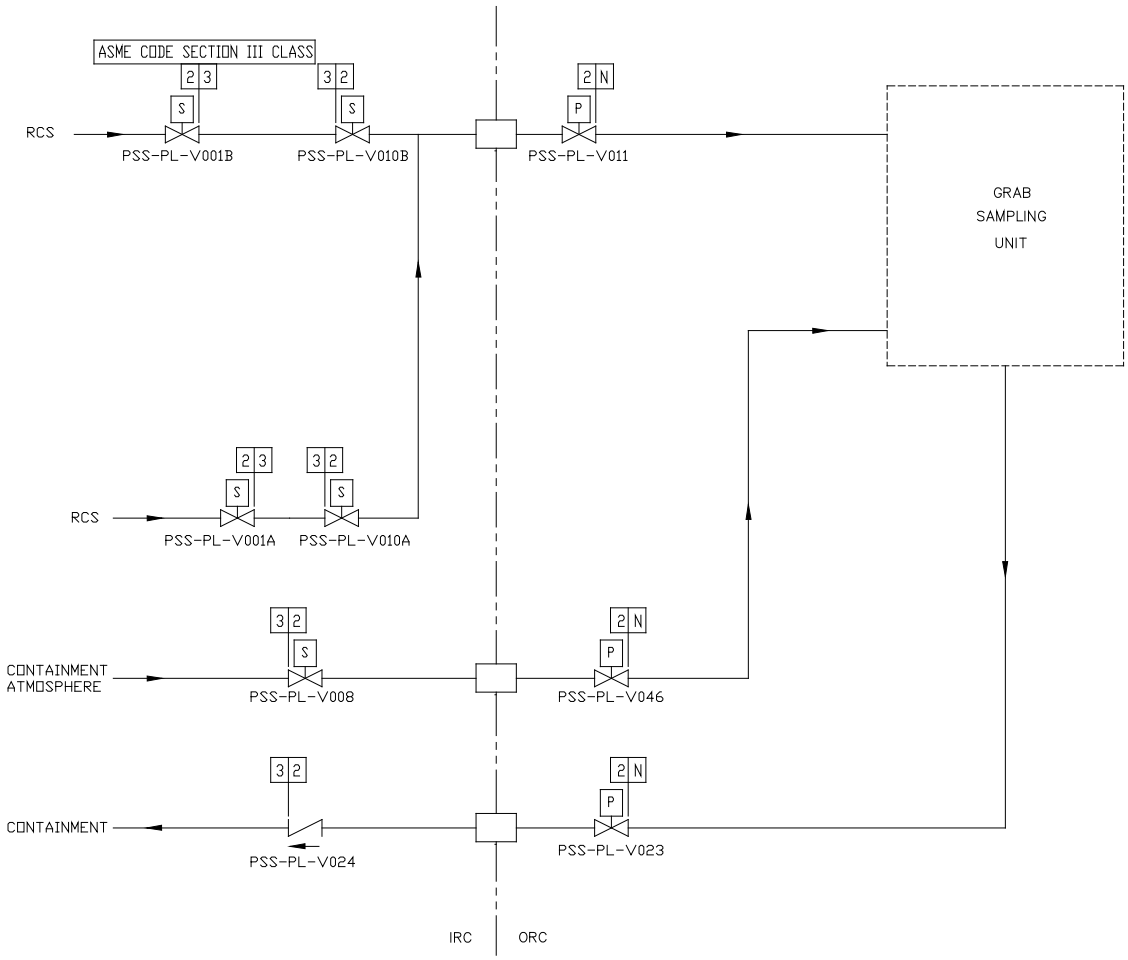

Figure 2.3.13-1
Primary Sampling System

2.3.14 Demineralized Water Transfer and Storage System

Design Description

The demineralized water transfer and storage system (DWS) receives water from the demineralized water treatment system (DTS), and provides a reservoir of demineralized water to supply the condensate storage tank and for distribution throughout the plant. Demineralized water is processed in the DWS to remove dissolved oxygen. In addition to supplying water for makeup of systems which require pure water, the demineralized water is used to sluice spent radioactive resins from the ion exchange vessels in the chemical and volume control system (CVS), the spent fuel pool cooling system (SFS), and the liquid radwaste system (WLS) to the solid radwaste system (WSS).

The component locations of the DWS are as shown in Table 2.3.14-3.

1. The functional arrangement of the DWS is as described in the Design Description of this Section 2.3.14.

2. The DWS provides the safety-related function of preserving containment integrity by isolation of the DWS lines penetrating the containment.

3. The DWS condensate storage tank (CST) provides the nonsafety-related function of water supply to the FWS startup feedwater pumps.

4. Displays of the parameters identified in Table 2.3.14-1 can be retrieved in the main control room (MCR).

Inspections, Tests, Analyses, and Acceptance Criteria

Table 2.3.14-2 specifies the inspections, tests, analyses, and associated acceptance criteria for the DWS.

Table 2.3.14-1

Equipment Name	Tag No.	Display	Control Function
Condensate Storage Tank Water Level	DWS-006	Yes	-

Note: Dash (-) indicates not applicable.

Table 2.3.14-2
Inspections, Tests, Analyses, and Acceptance Criteria

Design Commitment	Inspections, Tests, Analyses	Acceptance Criteria
1. The functional arrangement of the DWS is as described in the Design Description of this Section 2.3.14.	Inspection of the as-built system will be performed.	The as-built DWS conforms with the functional arrangement as described in the Design Description of this Section 2.3.14.
2. The DWS provides the safety-related function of preserving containment integrity by isolation of the DWS lines penetrating the containment.	See Tier 1 Material, Table 2.2.1-3, items 1 and 7.	See Tier 1 Material, Table 2.2.1-3, items 1 and 7.
3. The DWS CST provides the nonsafety-related function of water supply to the FWS startup feedwater tanks.	Inspection of the DWS CST will be performed.	The volume of the CST between the tank overflow and the startup feedwater pumps supply connection is greater than or equal to 325,000 gallons.
4. Displays of the parameters identified in Table 2.3.14-1 can be retrieved in the MCR.	Inspection will be performed for retrievability or parameters in the MCR.	The displays identified in Table 2.3.14-1 can be retrieved in the MCR.

Table 2.3.14-3		
Component Name	**Tag No.**	**Component Location**
Demineralizer Water Storage Tank Degasification System Package	DWS-MS-01	Annex Building
Condensate Storage Tank Degasification System Package	DWS-MS-02	Turbine Building
Demineralized Water Storage Tank	DWS-MT-01	Yard
Condensate Storage Tank	DWS-MT-02	Yard

2.3.15 Compressed and Instrument Air System

Design Description

The compressed and instrument air system (CAS) consists of three subsystems: instrument air, service air, and high-pressure air. The instrument air subsystem supplies compressed air for air-operated valves and dampers. The service air subsystem supplies compressed air at outlets throughout the plant to power air-operated tools and is used as a motive force for air-powered pumps. The service air subsystem is also utilized as a supply source for breathing air. The high-pressure air subsystem supplies air to the main control room emergency habitability system (VES), the generator breaker package, and fire fighting apparatus recharge station.

The CAS is required for normal operation and startup of the plant.

The component locations of the CAS are as shown in Table 2.3.15-3.

1. The functional arrangement of the CAS is as described in the Design Description of this Section 2.3.15.

2. The CAS provides the safety-related function of preserving containment integrity by isolation of the CAS lines penetrating the containment.

3. Displays of the parameters identified in Table 2.3.15-1 can be retrieved in the main control room (MCR).

Inspections, Tests, Analyses, and Acceptance Criteria

Table 2.3.15-2 specifies the inspections, tests, analyses, and associated acceptance criteria for the CAS.

Table 2.3.15-1

Equipment Name	Tag No.	Display	Control Function
Instrument Air Pressure	CAS-011	Yes	-

Note: Dash (-) indicates not applicable.

Table 2.3.15-2
Inspections, Tests, Analyses, and Acceptance Criteria

Design Commitment	Inspections, Tests, Analyses	Acceptance Criteria
1. The functional arrangement of the CAS is as described in the Design Description of this Section 2.3.15.	Inspection of the as-built system will be performed.	The as-built CAS conforms with the functional arrangement as described in the Design Description of this Section 2.3.15.
2. The CAS provides the safety-related function of preserving containment integrity by isolation of the CAS lines penetrating the containment.	See Tier 1 Material, Table 2.2.1-3, items 1 and 7.	See Tier 1 Material, Table 2.2.1-3, items 1 and 7.
3. Displays of the parameters identified in Table 2.3.15-1 can be retrieved in the MCR.	Inspection will be performed for retrievability of parameters in the MCR.	The displays identified in Table 2.3.15-1 can be retrieved in the MCR.

Table 2.3.15-3		
Component Name	**Tag No.**	**Component Location**
Instrument Air Compressor Package A	CAS-MS-01A	Turbine Building
Instrument Air Compressor Package B	CAS-MS-01B	Turbine Building
Instrument Air Dryer Package A	CAS-MS-02A	Turbine Building
Instrument Air Dryer Package B	CAS-MS-02B	Turbine Building
Service Air Compressor Package A	CAS-MS-03A	Turbine Building
Service Air Compressor Package B	CAS-MS-03B	Turbine Building
Service Air Dryer Package A	CAS-MS-04A	Turbine Building
Service Air Dryer Package B	CAS-MS-04B	Turbine Building
High Pressure Air Compressor and Filter Package	CAS-MS-05	Turbine Building
Instrument Air Receiver A	CAS-MT-01A	Turbine Building
Instrument Air Receiver B	CAS-MT-01B	Turbine Building
Service Air Receiver	CAS-MT-02	Turbine Building

2.3.16 Potable Water System

No entry for this system.

2.3.17 Waste Water System

No entry for this system.

2.3.18 Plant Gas System

No entry. Covered in Section 3.3, Buildings.

2.3.19 Communication System

Design Description

The communication system (EFS) provides intraplant communications during normal, maintenance, transient, fire, and accident conditions, including loss of offsite power.

1. a) The EFS has handsets, amplifiers, loudspeakers, and siren tone generators connected as a telephone/page system.

   b) The EFS has sound-powered equipment connected as a system.

2. The EFS provides the following nonsafety-related functions:

   a) The EFS telephone/page system provides intraplant, station-to-station communications and area broadcasting between the main control room (MCR) and the locations listed in Table 2.3.19-1.

   b) The EFS provides sound-powered communications between the MCR, the remote shutdown workstation (RSW), the Division A, B, C, D dc equipment rooms (Rooms 12201/12203/12205/12207), the Division A, B, C, D I&C rooms (Rooms 12301/12302/12304/12305), and the diesel generator building (Rooms 60310/60320) without external power.

Inspections, Tests, Analyses, and Acceptance Criteria

Table 2.3.19-2 specifies the inspections, tests, analyses, and associated acceptance criteria for the EFS.

Table 2.3.19-1	
Telephone/Page System Equipment	**Location**
Fuel Handling Area	12562
Division A, B, C, D dc Equipment Rooms	12201/12203/12205/12207
Division A, B, C, D I&C Rooms	12301/12302/12304/12305
Maintenance Floor Staging Area	12351
Containment Maintenance Floor	11300
Containment Operating Deck	11500

Table 2.3.19-2
Inspections, Tests, Analyses, and Acceptance Criteria

Design Commitment	Inspections, Tests, Analyses	Acceptance Criteria
1.a) The EFS has handsets, amplifiers, loudspeakers, and siren tone generators connected as a telephone/page system.	Inspection of the as-built system will be performed.	The as-built EFS has handsets, amplifiers, loudspeakers, and siren tone generators connected as a telephone/page system.
1.b) The EFS has sound-powered equipment connected as a system.	Inspection of the as-built system will be performed.	The as-built EFS has sound-powered equipment connected as a system.
2.a) The EFS telephone/page system provides intraplant, station-to-station communications and area broadcasting between the MCR and the locations listed in Table 2.3.19-1.	An inspection and test will be performed on the telephone/page communication equipment.	Telephone/page equipment is installed and voice transmission and reception from the MCR are accomplished.
2.b) EFS provides sound-powered communications between the MCR, the RSW, the Division A, B, C, D dc equipment rooms (Rooms 12201/12203/12205/12207), the Division A, B, C, D I&C rooms (Rooms 12301/12302/12304/12305), and the diesel generator building (Rooms 60310/60320) without external power.	An inspection and test will be performed of the sound-powered communication equipment.	Sound-powered equipment is installed and voice transmission and reception are accomplished.

2.3.20 Turbine Building Closed Cooling Water System

No entry for this system.

2.3.21 Secondary Sampling System

No entry for this system.

2.3.22 Containment Leak Rate Test System

No entry. Covered in Section 2.2.1, Containment System.

2.3.23 This section intentionally blank

2.3.24 Demineralized Water Treatment System

No entry for this system.

2.3.25 Gravity and Roof Drain Collection System

No entry for this system.

2.3.26 This section intentionally blank

2.3.27 Sanitary Drainage System

No entry for this system.

2.3.28 Turbine Island Vents, Drains, and Relief System

No entry for this system.

2.3.29 Radioactive Waste Drain System

Design Description

The radioactive waste drain system (WRS) collects radioactive and potentially radioactive liquid wastes from equipment and floor drains during normal operation, startup, shutdown, and refueling. The liquid wastes are then transferred to appropriate processing and disposal systems.

Nonradioactive wastes are collected by the waste water system (WWS). The WRS is as shown in Figure 2.3.29-1.

1. The functional arrangement of the WRS is as described in the Design Description of this Section 2.3.29.

2. The WRS collects liquid wastes from the equipment and floor drainage of the radioactive portions of the auxiliary building, annex building, and radwaste building and directs these wastes to a WRS sump or WLS waste holdup tanks located in the auxiliary building.

3. The WRS collects chemical wastes from the auxiliary building chemical laboratory drains and the decontamination solution drains in the annex building and directs these wastes to the chemical waste tank of the liquid radwaste system.

4. The WWS stops the discharge from the turbine building sump upon detection of high radiation in the discharge stream to the oil separator.

Table 2.3.29-1
Inspection, Tests, Analyses and Acceptance Criteria

Design Commitment	Inspection, Tests, Analyses	Acceptance Criteria
1. The functional arrangement of the WRS is as described in the Design Description of this Section 2.3.29.	Inspection of the as-built system will be performed.	The as-built WRS conforms with the functional arrangement as described in the Design Description of this Section 2.3.29.
2. The WRS collects liquid wastes from the equipment and floor drainage of the radioactive portions of the auxiliary building, annex building, and radwaste building and directs these wastes to a WRS sump or WLS waste holdup tanks located in the auxiliary building.	A test is performed by pouring water into the equipment and floor drains in the radioactive portions of the auxiliary building, annex building, and radwaste building.	The water poured into these drains is collected either in the auxiliary building radioactive drains sump or the WLS waste holdup tanks.
3. The WRS collects chemical wastes from the auxiliary building chemical laboratory drains and the decontamination solution drains in the annex building and directs these wastes to the chemical waste tank of the liquid radwaste system.	A test is performed by pouring water into the auxiliary building chemical laboratory and the decontamination solution drains in the annex building.	The water poured into these drains is collected in the chemical waste tank of the liquid radwaste system.
4. The WWS stops the discharge from the turbine building sump upon detection of high radiation in the discharge stream to the oil separator.	Tests will be performed to confirm that a simulated high radiation signal from the turbine building sump discharge radiation monitor, WWS-021 causes the sump pumps (WWS-MP-01A and B) to stop operating, stopping the spread of radiation outside of the turbine building.	A simulated high radiation signal causes the turbine building sump pumps (WWS-MP-01A and B) to stop operating, stopping the spread of radiation outside of the turbine building.

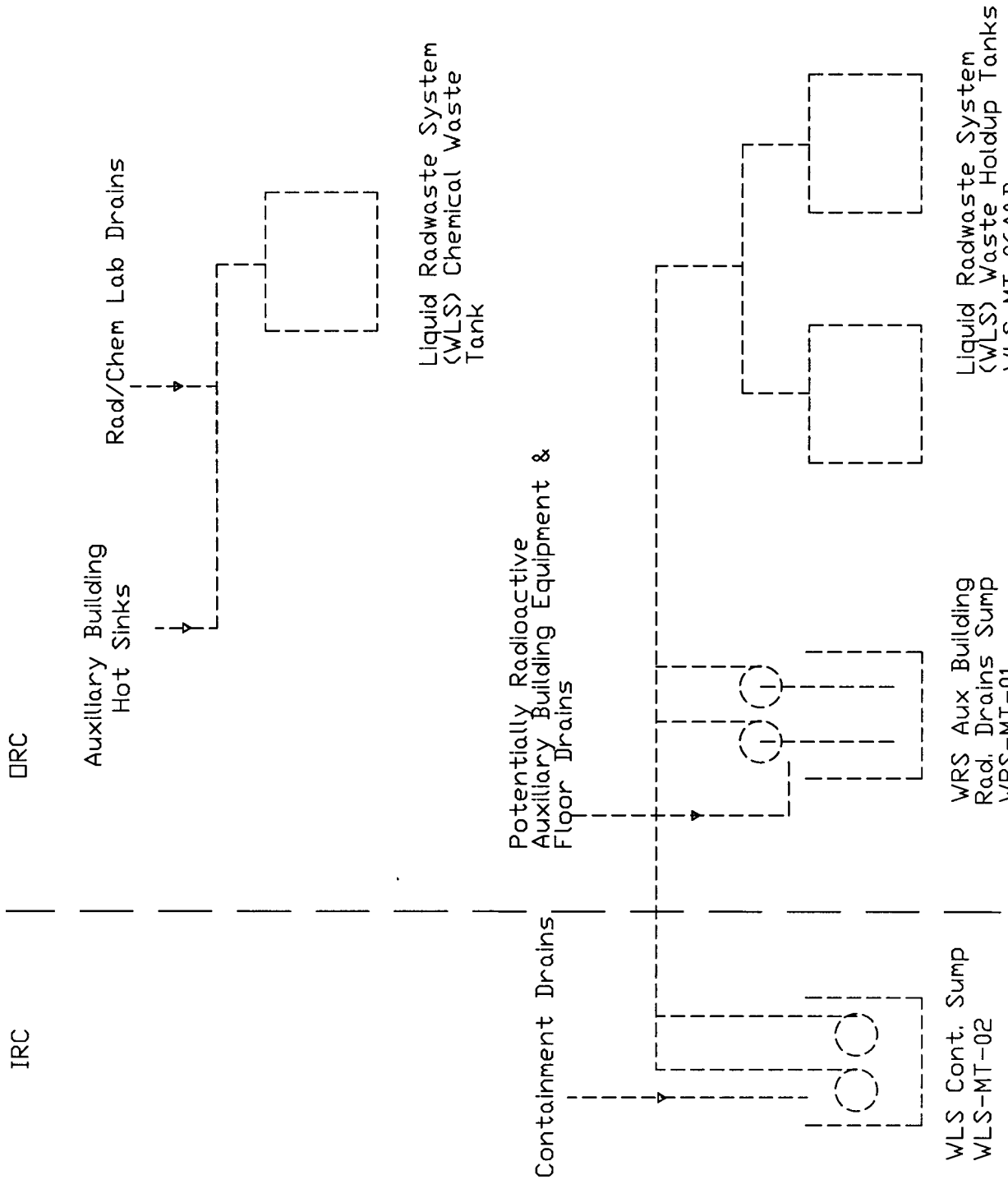

Figure 2.3.29-1
Radioactive Waste Drain System