2.2 Nuclear Safety Systems

2.2.1 Containment System

Design Description

The containment system (CNS) is the collection of boundaries that separates the containment atmosphere from the outside environment during design basis accidents.

The CNS is as shown in Figure 2.2.1-1 and the component locations of the CNS are as shown in Table 2.2.1-4.

1. The functional arrangement of the CNS and associated systems is as described in the Design Description of this Section 2.2.1.

2. a) The components identified in Table 2.2.1-1 as ASME Code Section III are designed and constructed in accordance with ASME Code Section III requirements.

   b) The piping identified in Table 2.2.1-2 as ASME Code Section III is designed and constructed in accordance with ASME Code Section III requirements.

3. a) Pressure boundary welds in components identified in Table 2.2.1-1 as ASME Code Section III meet ASME Code Section III requirements.

   b) Pressure boundary welds in piping identified in Table 2.2.1-2 as ASME Code Section III meet ASME Code Section III requirements.

4. a) The components identified in Table 2.2.1-1 as ASME Code Section III retain their pressure boundary integrity at their design pressure.

   b) The piping identified in Table 2.2.1-2 as ASME Code Section III retains its pressure boundary integrity at its design pressure.

5. The seismic Category I equipment identified in Table 2.2.1-1 can withstand seismic design basis loads without loss of structural integrity and safety function.

6. a) The Class 1E equipment identified in Table 2.2.1-1 as being qualified for a harsh environment can withstand the environmental conditions that would exist before, during, and following a design basis accident without loss of safety function for the time required to perform the safety function.

   b) The Class 1E components identified in Table 2.2.1-1 are powered from their respective Class 1E division.

   c) Separation is provided between CNS Class 1E divisions, and between Class 1E divisions and non-Class 1E cable.

d) The non-Class 1E electrical penetrations identified in Table 2.2.1-1 as being qualified for a harsh environment can withstand the environmental conditions that would exist before, during, and following a design basis accident without loss of containment pressure boundary integrity.

7. The CNS provides the safety-related function of containment isolation for containment boundary integrity and provides a barrier against the release of fission products to the atmosphere.

8. Containment electrical penetration assemblies are protected against currents that are greater than the continuous ratings.

9. Safety-related displays identified in Table 2.2.1-1 can be retrieved in the main control room (MCR).

10. a) Controls exist in the MCR to cause those remotely operated valves identified in Table 2.2.1-1 to perform active functions.

    b) The valves identified in Table 2.2.1-1 as having protection and safety monitoring system (PMS) control perform an active function after receiving a signal from the PMS.

    c) The valves identified in Table 2.2.1-1 as having diverse actuation system (DAS) control perform an active function after receiving a signal from the DAS.

11. a) The motor-operated and check valves identified in Table 2.2.1-1 perform an active safety-related function to change position as indicated in the table.

    b) After loss of motive power, the remotely operated valves identified in Table 2.2.1-1 assume the indicated loss of motive power position.

Inspections, Tests, Analyses, and Acceptance Criteria

Table 2.2.1-3 specifies the inspections, tests, analyses, and associated acceptance criteria for the CNS.

Table 2.2.1-1

Equipment Name	Tag No.	ASME Code Section III	Seismic Cat. I	Remotely Operated Valve	Class 1E/ Qual. for Harsh Envir.	Safety-Related Display	Control PMS/DAS	Active Function	Loss of Motive Power Position
Service Air Supply Outside Containment Isolation Valve	CAS-PL-V204	Yes	Yes	No	-/-	No	-/-	None	-
Service Air Supply Inside Containment Isolation Check Valve	CAS-PL-V205	Yes	Yes	No	-/-	No	-/-	Transfer Closed	-
Instrument Air Supply Outside Containment Isolation Valve	CAS-PL-V014	Yes	Yes	Yes	Yes/No	Yes (Valve Position)	Yes/No	Transfer Closed	Closed
Instrument Air Supply Inside Containment Isolation Check Valve	CAS-PL-V015	Yes	Yes	No	-/-	-	-/-	Transfer Closed	-
Component Cooling Water System (CCS) Containment Isolation Motor-operated Valve (MOV) – Inlet Line Outside Reactor Containment (ORC)	CCS-PL-V200	Yes	Yes	Yes	Yes/No	Yes (Valve Position)	Yes/No	Transfer Closed	As Is
CCS Containment Isolation Check Valve – Inlet Line Inside Reactor Containment (IRC)	CCS-PL-V201	Yes	Yes	No	-/-	No	-/-	Transfer Closed	-

Note: Dash (-) indicates not applicable.

Table 2.2.1-1 (cont.)

Equipment Name	Tag No.	ASME Code Section III	Seismic Cat. I	Remotely Operated Valve	Class 1E/ Qual. for Harsh Envir.	Safety-Related Display	Control PMS/DAS	Active Function	Loss of Motive Power Position
CCS Containment Isolation MOV – Outlet Line IRC	CCS-PL-V207	Yes	Yes	Yes	Yes/Yes	Yes (Valve Position)	Yes/No	Transfer Closed	As Is
CCS Containment Isolation MOV – Outlet Line ORC	CCS-PL-V208	Yes	Yes	Yes	Yes/No	Yes (Valve Position)	Yes/No	Transfer Closed	As Is
CCS Containment Isolation Relief Valve – Outlet Line IRC	CCS-PL-220	Yes	Yes	No	-/-	No	-/-	Transfer Closed/ Transfer Open	-
Demineralized Water Supply Containment Isolation Valve ORC	DWS-PL-V244	Yes	Yes	No	-/-	No	-/-	None	-
Demineralized Water Supply Containment Isolation Check Valve IRC	DWS-PL-V245	Yes	Yes	No	-/-	No	-/-	Transfer Closed	-
Fuel Transfer Tube	FHS-FT-001	Yes	Yes	-	-/-	-	-/-	-	-
Fuel Transfer Tube Isolation Valve	FHS-PL-V001	Yes	Yes	-	-/-	-	-/-	Transfer Closed	-
Fire Water Containment Supply Isolation Valve – Outside	FPS-PL-V050	Yes	Yes	No	-/-	No	-/-	None	-
Fire Water Containment Isolation Supply Check Valve – Inside	FPS-PL-V052	Yes	Yes	No	-/-	No	-/-	Transfer Closed	-

Note: Dash (-) indicates not applicable.

Table 2.2.1-1 (cont.)

Equipment Name	Tag No.	ASME Code Section III	Seismic Cat. I	Remotely Operated Valve	Class 1E/ Qual. for Harsh Envir.	Safety-Related Display	Control PMS/DAS	Active Function	Loss of Motive Power Position
Spent Fuel Pool Cooling System (SFS) Discharge Line Containment Isolation Check Valve – IRC	SFS-PL-V037	Yes	Yes	No	-/-	No	-/-	Transfer Closed	-
SFS Discharge Line Containment Isolation MOV – ORC	SFS-PL-V038	Yes	Yes	Yes	Yes/No	Yes (Valve Position)	Yes/No	Transfer Closed	As Is
SFS Suction Line Containment Isolation MOV – IRC	SFS-PL-V034	Yes	Yes	Yes	Yes/Yes	Yes (Valve Position)	Yes/No	Transfer Closed	As Is
SFS Suction Line Containment Isolation MOV – ORC	SFS-PL-V035	Yes	Yes	Yes	Yes/No	Yes (Valve Position)	Yes/No	Transfer Closed	As Is
SFS Suction Line Containment Isolation Relief Valve – IRC	SFS-PL-V067	Yes	Yes	No	-/-	No	-/-	Transfer Closed/ Transfer Open	-
Containment Purge Inlet Containment Isolation Valve – ORC	VFS-PL-V003	Yes	Yes	Yes	Yes/No	Yes (Valve Position)	Yes/Yes	Transfer Closed	Closed
Containment Purge Inlet Containment Isolation Valve – IRC	VFS-PL-V004	Yes	Yes	Yes	Yes/Yes	Yes (Valve Position)	Yes/Yes	Transfer Closed	Closed

Note: Dash (-) indicates not applicable.

Table 2.2.1-1 (cont.)

Equipment Name	Tag No.	ASME Code Section III	Seismic Cat. I	Remotely Operated Valve	Class 1E/ Qual. for Harsh Envir.	Safety-Related Display	Control PMS/DAS	Active Function	Loss of Motive Power Position
Integrated Leak Rate Testing Vent Discharge Containment Isolation Valve – ORC	VFS-PL-V008	Yes	Yes	No	-/-	No	-/-	None	-
Containment Purge Discharge Containment Isolation Valve – IRC	VFS-PL-V009	Yes	Yes	Yes	Yes/Yes	Yes (Valve Position)	Yes/Yes	Transfer Closed	Closed
Containment Purge Discharge Containment Isolation Valve – ORC	VFS-PL-V010	Yes	Yes	Yes	Yes/No	Yes (Valve Position)	Yes/Yes	Transfer Closed	Closed
Vacuum Relief Containment Isolation A – ORC	VFS-PL-V800A	Yes	Yes	Yes	Yes/No	Yes (Valve Position)	Yes/No	Transfer Closed/ Transfer Open	As Is
Vacuum Relief Containment Isolation B – ORC	VFS-PL-V800B	Yes	Yes	Yes	Yes/No	Yes (Valve Position)	Yes/No	Transfer Closed/ Transfer Open	As Is
Vacuum Relief Containment Isolation Check Valve A – IRC	VFS-PL-V803A	Yes	Yes	No	-/-	No	-/-	Transfer Closed/ Transfer Open	-
Vacuum Relief Containment Isolation Check Valve B – IRC	VFS-PL-V803B	Yes	Yes	No	-/-	No	-/-	Transfer Closed/ Transfer Open	-

Note: Dash (-) indicates not applicable.

Table 2.2.1-1 (cont.)

Equipment Name	Tag No.	ASME Code Section III	Seismic Cat. I	Remotely Operated Valve	Class 1E/ Qual. for Harsh Envir.	Safety-Related Display	Control PMS/ DAS	Active Function	Loss of Motive Power Position
Fan Coolers Return Containment Isolation Valve – IRC	VWS-PL-V082	Yes	Yes	Yes	Yes/Yes	Yes (Valve Position)	Yes/No	Transfer Closed	Closed
Fan Coolers Return Containment Isolation Valve – ORC	VWS-PL-V086	Yes	Yes	Yes	Yes/No	Yes (Valve Position)	Yes/No	Transfer Closed	Closed
Fan Coolers Return Containment Isolation Relief Valve – IRC	VWS-PL-V080	Yes	Yes	No	-/-	No	-/-	Transfer Closed/ Transfer Open	-
Fan Coolers Supply Containment Isolation Valve – ORC	VWS-PL-V058	Yes	Yes	Yes	Yes/No	Yes (Valve Position)	Yes/No	Transfer Closed	Closed
Fan Coolers Supply Containment Isolation Check Valve – IRC	VWS-PL-V062	Yes	Yes	No	-/-	No	-/-	Transfer Closed	-
Reactor Coolant Drain Tank (RCDT) Gas Outlet Containment Isolation Valve – IRC	WLS-PL-V067	Yes	Yes	Yes	Yes/Yes	Yes (Valve Position)	Yes/No	Transfer Closed	Closed
RCDT Gas Outlet Containment Isolation Valve – ORC	WLS-PL-V068	Yes	Yes	Yes	Yes/No	Yes (Valve Position)	Yes/No	Transfer Closed	Closed

Note: Dash (-) indicates not applicable.

Table 2.2.1-1 (cont.)

Equipment Name	Tag No.	ASME Code Section III	Seismic Cat. I	Remotely Operated Valve	Class 1E/ Qual. for Harsh Envir.	Safety-Related Display	Control PMS/ DAS	Active Function	Loss of Motive Power Position
Sump Discharge Containment Isolation Valve – IRC	WLS-PL-V055	Yes	Yes	Yes	Yes/Yes	Yes (Valve Position)	Yes/Yes	Transfer Closed	Closed
Sump Discharge Containment Isolation Valve – ORC	WLS-PL-V057	Yes	Yes	Yes	Yes/No	Yes (Valve Position)	Yes/Yes	Transfer Closed	Closed
Sump Discharge Containment Isolation Relief Valve – IRC	WLS-PL-V058	Yes	Yes	No	-/-	No	-/-	Transfer Closed/ Transfer Open	-
Spare Penetration	CNS-PY-C01	Yes	Yes	-	-/-	-	-/-	-	-
Spare Penetration	CNS-PY-C02	Yes	Yes	-	-/-	-	-/-	-	-
Spare Penetration	CNS-PY-C03	Yes	Yes	-	-/-	-	-/-	-	-
Main Equipment Hatch	CNS-MY-Y01	Yes	Yes	-	-/-	-	-/-	-	-
Maintenance Hatch	CNS-MY-Y02	Yes	Yes	-	-/-	-	-/-	-	-
Personnel Hatch	CNS-MY-Y03	Yes	Yes	-	-/-	-	-/-	-	-
Personnel Hatch	CNS-MY-Y04	Yes	Yes	-	-/-	-	-/-	-	-
Containment Vessel	CNS-MV-01	Yes	Yes	-	-/-	-	-/-	-	-
Electrical Penetration P03	DAS-EY-P03Z	Yes	Yes	-	No/Yes	-	-/-	-	-
Electrical Penetration P01	ECS-EY-P01X	Yes	Yes	-	No/Yes	-	-/-	-	-

Note: Dash (-) indicates not applicable.

Table 2.2.1-1 (cont.)

Equipment Name	Tag No.	ASME Code Section III	Seismic Cat. I	Remotely Operated Valve	Class 1E/ Qual. for Harsh Envir.	Safety-Related Display	Control PMS/ DAS	Active Function	Loss of Motive Power Position
Electrical Penetration P02	ECS-EY-P02X	Yes	Yes	-	No/Yes	-	-/-	-	-
Electrical Penetration P06	ECS-EY-P06Y	Yes	Yes	-	No/Yes	-	-/-	-	-
Electrical Penetration P09	ECS-EY-P09W	Yes	Yes	-	No/Yes	-	-/-	-	-
Electrical Penetration P10	ECS-EY-P10W	Yes	Yes	-	No/Yes	-	-/-	-	-
Electrical Penetration P11	IDSA-EY-P11Z	Yes	Yes	-	Yes/Yes	-	-/-	-	-
Electrical Penetration P12	IDSA-EY-P12Y	Yes	Yes	-	Yes/Yes	-	-/-	-	-
Electrical Penetration P13	IDSA-EY-P13Y	Yes	Yes	-	Yes/Yes	-	-/-	-	-
Electrical Penetration P14	IDSD-EY-P14Z	Yes	Yes	-	Yes/Yes	-	-/-	-	-
Electrical Penetration P15	IDSD-EY-P15Y	Yes	Yes	-	Yes/Yes	-	-/-	-	-
Electrical Penetration P16	IDSD-EY-P16Y	Yes	Yes	-	Yes/Yes	-	-/-	-	-
Electrical Penetration P18	ECS-EY-P18X	Yes	Yes	-	No/Yes	-	-/-	-	-
Electrical Penetration P21	EDS-EY-P21Z	Yes	Yes	-	No/Yes	-	-/-	-	-
Electrical Penetration P22	ECS-EY-P22X	Yes	Yes	-	No/Yes	-	-/-	-	-
Electrical Penetration P23	ECS-EY-P23X	Yes	Yes	-	No/Yes	-	-/-	-	-
Electrical Penetration P24	ECS-EY-P24	Yes	Yes	-	No/Yes	-	-/-	-	-
Electrical Penetration P25	ECS-EY-P25W	Yes	Yes	-	No/Yes	-	-/-	-	-
Electrical Penetration P26	ECS-EY-P26W	Yes	Yes	-	No/Yes	-	-/-	-	-
Electrical Penetration P27	IDSC-EY-P27Z	Yes	Yes	-	Yes/Yes	-	-/-	-	-

Note: Dash (-) indicates not applicable.

Table 2.2.1-1 (cont.)

Equipment Name	Tag No.	ASME Code Section III	Seismic Cat. I	Remotely Operated Valve	Class 1E/ Qual. for Harsh Envir.	Safety-Related Display	Control PMS/ DAS	Active Function	Loss of Motive Power Position
Electrical Penetration P28	IDSC-EY-P28Y	Yes	Yes	-	Yes/Yes	-	-/-	-	-
Electrical Penetration P29	IDSC-EY-P29Y	Yes	Yes	-	Yes/Yes	-	-/-	-	-
Electrical Penetration P30	IDSB-EY-P30Z	Yes	Yes	-	Yes/Yes	-	-/-	-	-
Electrical Penetration P31	IDSB-EY-P31Y	Yes	Yes	-	Yes/Yes	-	-/-	-	-
Electrical Penetration P32	IDSB-EY-P32Y	Yes	Yes	-	Yes/Yes	-	-/-	-	-
Instrument Penetration P46	PCS-PY-C01	Yes	Yes	-	-/-	-	-/-	-	-
Instrument Penetration P47	PCS-PY-C02	Yes	Yes	-	-/-	-	-/-	-	-
Instrument Penetration P48	PCS-PY-C03	Yes	Yes	-	-/-	-	-/-	-	-
Instrument Penetration P49	PCS-PY-C04	Yes	Yes	-	-/-	-	-/-	-	-

Note: Dash (-) indicates not applicable.

Table 2.2.1-2

Line Name	Line Number	ASME Code Section III
Instrument Air In	CAS-PL-L015	Yes
Service Air In	CAS-PL-L204	Yes
Component Cooling Water Supply to Containment	CCS-PL-L201	Yes
Component Cooling Water Outlet from Containment	CCS-PL-L207	Yes
Demineralized Water In	DWS-PL-L245, L230	Yes
Fire Protection Supply to Containment	FPS-PL-L107	Yes
Spent Fuel Pool Cooling Discharge	SFS-PL-L017	Yes
Spent Fuel Pool Cooling Suction from Containment	SFS-PL-L038	Yes
Containment Purge Inlet to Containment	VFS-PL-L104, L105, L106	Yes
Containment Purge Discharge from Containment	VFS-PL-L203, L204, L205, L800, L801A/B, L803, L804, L805A/B	Yes
Fan Cooler Supply Line to Containment	VWS-PL-L032	Yes
Fan Cooler Return Line from Containment	VWS-PL-L055	Yes
RCDT Gas Out	WLS-PL-L022	Yes
Waste Sump Out	WLS-PL-L073	Yes

Table 2.2.1-3
Inspections, Tests, Analyses, and Acceptance Criteria

Design Commitment	Inspections, Tests, Analyses	Acceptance Criteria
1. The functional arrangement of the CNS and associated systems is as described in the Design Description of this Section 2.2.1.	Inspection of the as-built system will be performed.	The as-built CNS conforms with the functional arrangement as described in the Design Description of this Section 2.2.1.
2.a) The components identified in Table 2.2.1-1 as ASME Code Section III are designed and constructed in accordance with ASME Code Section III requirements.	Inspection will be conducted of the as-built components as documented in the ASME design reports.	The ASME Code Section III design reports exist for the as-built components identified in Table 2.2.1-1 as ASME Code Section III.
2.b) The piping identified in Table 2.2.1-2 as ASME Code Section III is designed and constructed in accordance with ASME Code Section III requirements.	Inspection will be conducted of the as-built piping as documented in the ASME design reports.	The ASME Code Section III design reports exist for the as-built piping identified in Table 2.2.1-2 as ASME Code Section III.
3.a) Pressure boundary welds in components identified in Table 2.2.1-1 as ASME Code Section III meet ASME Code Section III requirements.	Inspection of the as-built pressure boundary welds will be performed in accordance with the ASME Code Section III.	A report exists and concludes that the ASME Code Section III requirements are met for non-destructive examination of pressure boundary welds.
3.b) Pressure boundary welds in piping identified in Table 2.2.1-2 as ASME Code Section III meet ASME Code Section III requirements.	Inspection of the as-built pressure boundary welds will be performed in accordance with the ASME Code Section III.	A report exists and concludes that the ASME Code Section III requirements are met for non-destructive examination of pressure boundary welds.

Table 2.2.1-3 (cont.)
Inspections, Tests, Analyses, and Acceptance Criteria

Design Commitment	Inspections, Tests, Analyses	Acceptance Criteria
4.a) The components identified in Table 2.2.1-1 as ASME Code Section III retain their pressure boundary integrity at their design pressure.	i) A hydrostatic or pressure test will be performed on the components required by the ASME Code Section III to be tested.	i) A report exists and concludes that the results of the pressure test of the components identified in Table 2.2.1-1 as ASME Code Section III conform with the requirements of the ASME Code Section III.
	ii) Impact testing will be performed on the containment and pressure-retaining penetration materials in accordance with the ASME Code Section III, Subsection NE, to confirm the fracture toughness of the materials.	ii) A report exists and concludes that the containment and pressure-retaining penetration materials conform with fracture toughness requirements of the ASME Code Section III.
4.b) The piping identified in Table 2.2.1-2 as ASME Code Section III retains its pressure boundary integrity at its design pressure.	A hydrostatic or pressure test will be performed on the piping required by the ASME Code Section III to be pressure tested.	A report exists and concludes that the results of the pressure test of the piping identified in Table 2.2.1-2 as ASME Code Section III conform with the requirements of the ASME Code Section III.
5. The seismic Category I equipment identified in Table 2.2.1-1 can withstand seismic design basis loads without loss of structural integrity and safety function.	i) Inspection will be performed to verify that the seismic Category I equipment and valves identified in Table 2.2.1-1 are located on the Nuclear Island.	i) The seismic Category I equipment identified in Table 2.2.1-1 is located on the Nuclear Island.
	ii) Type tests, analyses, or a combination of type tests and analyses of seismic Category I equipment will be performed.	ii) A report exists and concludes that the seismic Category I equipment can withstand seismic design basis dynamic loads without loss of structural integrity and safety function.
	iii) Inspection will be performed for the existence of a report verifying that the as-built equipment including anchorage is seismically bounded by the tested or analyzed conditions.	iii) The as-built equipment including anchorage is seismically bounded by the tested or analyzed conditions.

Table 2.2.1-3 (cont.)
Inspections, Tests, Analyses, and Acceptance Criteria

Design Commitment	Inspections, Tests, Analyses	Acceptance Criteria
6.a) The Class 1E equipment identified in Table 2.2.1-1 as being qualified for a harsh environment can withstand the environmental conditions that would exist before, during, and following a design basis accident without loss of safety function for the time required to perform the safety function.	i) Type tests, analyses, or a combination of type tests and analyses will be performed on Class 1E equipment located in a harsh environment.	i) A report exists and concludes that the Class 1E equipment identified in Table 2.2.1-1 as being qualified for a harsh environment can withstand the environmental conditions that would exist before, during, and following a design basis accident without loss of safety function for the time required to perform the safety function.
	ii) Inspection will be performed of the as-built Class 1E equipment and the associated wiring, cables, and terminations located in a harsh environment.	ii) A report exists and concludes that the as-built Class 1E equipment and the associated wiring, cables, and terminations identified in Table 2.2.1-1 as being qualified for a harsh environment are bounded by type tests, analyses, or a combination of type tests and analyses.
6.b) The Class 1E components identified in Table 2.2.1-1 are powered from their respective Class 1E division.	Testing will be performed by providing a simulated test signal in each Class 1E division.	A simulated test signal exists at the Class 1E equipment identified in Table 2.2.1-1 when the assigned Class 1E division is provided the test signal.
6.c) Separation is provided between CNS Class 1E divisions, and between Class 1E divisions and non-Class 1E cable.	See Tier 1 Material, Table 3.3-6, item 7.d.	See Tier 1 Material, Table 3.3-6, item 7.d.
6.d) The non-Class 1E electrical penetrations identified in Table 2.2.1-1 as being qualified for a harsh environment can withstand the environmental conditions that would exist before, during, and following a design basis accident without loss of containment pressure boundary integrity.	i) Type tests, analyses, or a combination of type tests and analyses will be performed on non-Class 1E electrical penetrations located in a harsh environment.	i) A report exists and concludes that the non-Class 1E electrical penetrations identified in Table 2.2.1-1 as being qualified for a harsh environment can withstand the environmental conditions that would exist before, during, and following a design basis accident without loss of containment pressure boundary integrity.
	ii) Inspection will be performed of the as-built non-Class 1E electrical penetrations located in a harsh environment.	ii) A report exists and concludes that the as-built non-Class 1E electrical penetrations identified in Table 2.2.1-1 as being qualified for a harsh environment are bounded by type tests, analyses, or a combination of type tests and analyses.

Table 2.2.1-3 (cont.)
Inspections, Tests, Analyses, and Acceptance Criteria

Design Commitment	Inspections, Tests, Analyses	Acceptance Criteria
7. The CNS provides the safety-related function of containment isolation for containment boundary integrity and provides a barrier against the release of fission products to the atmosphere.	i) A containment integrated leak rate test will be performed. ii) Testing will be performed to demonstrate that remotely operated containment isolation valves close within the required response times.	i) The leakage rate from containment for the integrated leak rate test is less than L_a. ii) The containment purge isolation valves (VFS-PL-V003, -V004, -V009, and -V010) close within 20 seconds, containment vacuum relief isolation valves (VFS-PL-V800A and -V800B) close within 30 seconds, SGS valves SGS-PL-V040A/B and SGS-PL-V057A/B are covered in Tier 1 Material, subsection 2.2.4, Table 2.2.4-4 (item 11.b.ii) and all other containment isolation valves close within 60 seconds upon receipt of an actuation signal.
8. Containment electrical penetration assemblies are protected against currents that are greater than the continuous ratings.	An analysis for the as-built containment electrical penetration assemblies will be performed to demonstrate (1) that the maximum current of the circuits does not exceed the continuous rating of the containment electrical penetration assembly, or (2) that the circuits have redundant protection devices in series and that the redundant current protection devices are coordinated with the containment electrical penetration assembly's rated short circuit thermal capacity data and prevent current from exceeding the continuous current rating of the containment electrical penetration assembly.	Analysis exists for the as-built containment electrical penetration assemblies and concludes that the penetrations are protected against currents which are greater than their continuous ratings.
9. Safety-related displays identified in Table 2.2.1-1 can be retrieved in the MCR.	Inspection will be performed for retrievability of the safety-related displays in the MCR.	Safety-related displays identified in Table 2.2.1-1 can be retrieved in the MCR.
10.a) Controls exist in the MCR to cause those remotely operated valves identified in Table 2.2.1-1 to perform active functions.	Stroke testing will be performed on remotely operated valves identified in Table 2.2.1-1 using the controls in the MCR.	Controls in the MCR operate to cause remotely operated valves identified in Table 2.2.1-1 to perform active safety functions.

Table 2.2.1-3 (cont.)
Inspections, Tests, Analyses, and Acceptance Criteria

Design Commitment	Inspections, Tests, Analyses	Acceptance Criteria
10.b) The valves identified in Table 2.2.1-1 as having PMS control perform an active safety function after receiving a signal from the PMS.	Testing will be performed on remotely operated valves listed in Table 2.2.1-1 using real or simulated signals into the PMS.	The remotely operated valves identified in Table 2.2.1-1 as having PMS control perform the active function identified in the table after receiving a signal from PMS.
10.c) The valves identified in Table 2.2.1-1 as having DAS control perform an active safety function after receiving a signal from DAS.	Testing will be performed on remotely operated valves listed in Table 2.2.1-1 using real or simulated signals into the DAS.	The remotely operated valves identified in Table 2.2.1-1 as having DAS control perform the active function identified in the table after receiving a signal from DAS.
11.a) The motor-operated and check valves identified in Table 2.2.1-1 perform an active safety-related function to change position as indicated in the table.	i) Tests or type tests of motor-operated valves will be performed to demonstrate the capability of each valve to operate under design conditions.	i) A test report exists and concludes that each motor-operated valve changes position as indicated in Table 2.2.1-1 under design conditions.
	ii) Inspection will be performed for the existence of a report verifying that the as-built motor-operated valves are bounded by the tests or type tests.	ii) A report exists and concludes that the as-built motor-operated valves are bounded by the tests or type tests.
	iii) Tests of the motor-operated valves will be performed under preoperational flow, differential pressure, and temperature conditions.	iii) Each motor-operated valve changes position as indicated in Table 2.2.1-1 under pre-operational test conditions.
	iv) Exercise testing of the check valves with active safety functions identified in Table 2.2.1-1 will be performed under preoperational test pressure, temperature and fluid flow conditions.	iv) Each check valve changes position as indicated in Table 2.2.1-1.
11.b) After loss of motive power, the remotely operated valves identified in Table 2.2.1-1 assume the indicated loss of motive power position.	Testing of the remotely operated valves will be performed under the conditions of loss of motive power.	After loss of motive power, each remotely operated valve identified in Table 2.2.1-1 assumes the indicated loss of motive power position.

Table 2.2.1-4		
Component Name	**Tag. No.**	**Component Location**
Containment Vessel	CNS-MV-01	Shield Building

[This page intentionally blank]

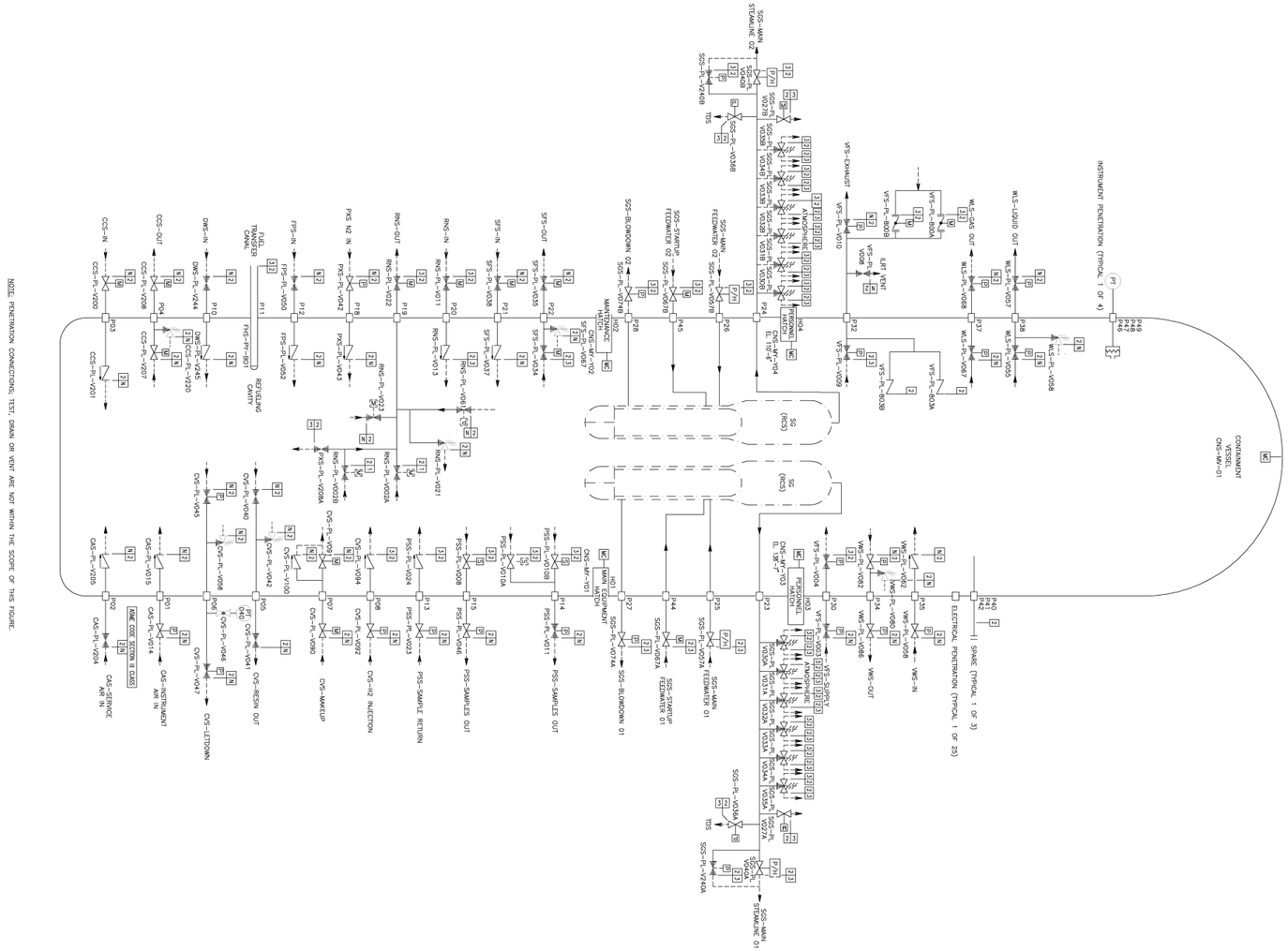

Figure 2.2.1-1
Containment System

2.2.2 Passive Containment Cooling System

Design Description

The passive containment cooling system (PCS) removes heat from the containment during design basis events.

The PCS is as shown in Figure 2.2.2-1 and the component locations of the PCS are as shown in Table 2.2.2-4.

1. The functional arrangement of the PCS is as described in the Design Description of this Section 2.2.2.

2. a) The components identified in Table 2.2.2-1 as ASME Code Section III are designed and constructed in accordance with ASME Code Section III requirements.

   b) The pipelines identified in Table 2.2.2-2 as ASME Code Section III are designed and constructed in accordance with ASME Code Section III requirements.

3. a) Pressure boundary welds in components identified in Table 2.2.2-1 as ASME Code Section III meet ASME Code Section III requirements.

   b) Pressure boundary welds in the pipelines identified in Table 2.2.2-2 as ASME Code Section III meet ASME Code Section III requirements.

4. a) The components identified in Table 2.2.2-1 as ASME Code Section III retain their pressure boundary integrity at their design pressure.

   b) The pipelines identified in Table 2.2.2-2 as ASME Code Section III retain their pressure boundary integrity at their design pressure.

5. a) The seismic Category I components identified in Table 2.2.2-1 can withstand seismic design basis loads without loss of safety function.

   b) Each of the pipelines identified in Table 2.2.2-2 for which functional capability is required is designed to withstand combined normal and seismic design basis loads without a loss of its functional capability.

   c) The passive containment cooling ancillary water storage tank (PCCAWST) can withstand a seismic event.

6. a) The Class 1E components identified in Table 2.2.2-1 as being qualified for a harsh environment can withstand the environmental conditions that would exist before, during, and following a design basis accident without loss of safety function for the time required to perform the safety function.

   b) The Class 1E components identified in Table 2.2.2-1 are powered from their respective Class 1E division.

c) Separation is provided between PCS Class 1E divisions, and between Class 1E divisions and non-Class 1E cable.

7. The PCS performs the following safety-related functions:

   a) The PCS delivers water from the PCCWST to the outside, top of the containment vessel.

   b) The PCS wets the outside surface of the containment vessel. The inside and outside of the containment vessel above the operating deck are coated with an inorganic zinc coating.

   c) The PCS provides air flow over the outside of the containment vessel by a natural circulation air flow path from the air inlets to the air discharge structure.

   d) The PCS drains the excess water from the outside of the containment vessel through the two upper annulus drains.

   e) The PCS provides a flow path for long-term water makeup to the passive containment cooling water storage tank (PCCWST).

   f) The PCS provides a flow path for long-term water makeup from the PCCWST to the spent fuel pool.

8. The PCS performs the following nonsafety-related functions:

   a) The PCCAWST contains an inventory of cooling water sufficient for PCS containment cooling from hour 72 through day 7.

   b) The PCS delivers water from the PCCAWST to the PCCWST and spent fuel pool simultaneously.

   c) The PCCWST includes a water inventory for the fire protection system.

9. Safety-related displays identified in Table 2.2.2-1 can be retrieved in the main control room (MCR).

10. a) Controls exist in the MCR to cause the remotely operated valves identified in Table 2.2.2-1 to perform active functions.

    b) The valves identified in Table 2.2.2-1 as having protection and safety monitoring system (PMS) control perform an active safety function after receiving a signal from the PMS.

    c) The valves identified in Table 2.2.2-1 as having diverse actuation system (DAS) control perform an active safety function after receiving a signal from the DAS.

11. a) The motor-operated valves identified in Table 2.2.2-1 perform an active safety-related function to change position as indicated in the table.

    b) After loss of motive power, the remotely operated valves identified in Table 2.2.2-1 assume the indicated loss of motive power position.

Inspections, Tests, Analyses, and Acceptance Criteria

Table 2.2.2-3 specifies the inspections, tests, analyses, and associated acceptance criteria for the PCS.

Table 2.2.2-1

Component Name	Tag No.	ASME Code Section III	Seismic Cat. I	Remotely Operated Valve	Class 1E/ Qual. for Harsh Envir.	Safety-Related Display	Control PMS/ DAS	Active Function	Loss of Motive Power Position
PCCWST	PCS-MT-01	No	Yes	-	-	-	-	-	-
Water Distribution Bucket	PCS-MT-03	No	Yes	-	-	-	-	-	-
Water Distribution Wiers	PCS-MT-04	No	Yes	-	-	-	-	-	-
PCCWST Isolation Valve	PCS-PL-V001A	Yes	Yes	Yes	Yes/No	Yes (Valve Position)	Yes/Yes	Transfer Open	Open
PCCWST Isolation Valve	PCS-PL-V001B	Yes	Yes	Yes	Yes/No	Yes (Valve Position)	Yes/Yes	Transfer Open	Open
PCCWST Isolation Valve	PCS-PL-V001C	Yes	Yes	Yes	Yes/No	Yes (Valve Position)	Yes/Yes	Transfer Open	As Is
PCCWST Isolation Block MOV	PCS-PL-V002A	Yes	Yes	Yes	Yes/No	Yes (Valve Position)	Yes/No	Transfer Open	As Is
PCCWST Isolation Block MOV	PCS-PL-V002B	Yes	Yes	Yes	Yes/No	Yes (Valve Position)	Yes/No	Transfer Open	As Is
PCCWST Isolation Block MOV	PCS-PL-V002C	Yes	Yes	Yes	Yes/No	Yes (Valve Position)	Yes/No	Transfer Open	As Is
PCS Recirculation Return Isolation Valve	PCS-PL-V023	Yes	Yes	-	-/No	No	-	Transfer Close	-
PCCWST Supply to Fire Protection System Isolation Valve	PCS-PL-V005	Yes	Yes	-	-/No	No	-	Transfer Close	-

Note: Dash (-) indicates not applicable.

Table 2.2.2-1 (cont.)

Component Name	Tag No.	ASME Code Section III	Seismic Cat. I	Remotely Operated Valve	Class 1E/ Qual. for Harsh Envir.	Safety-Related Display	Control PMS/ DAS	Active Function	Loss of Motive Power Position
PCS Makeup to SFS Isolation Valve	PCS-PL-V009	Yes	Yes	-	-/No	No	-	Transfer Open/ Transfer Close	-
Water Makeup Isolation Valve	PCS-PL-V044	Yes	Yes	-	-/No	No	-	Transfer Open	-
Water Bucket Makeup Line Drain Valve	PCS-PL-V015	Yes	Yes	-	-/No	No	-	Transfer Close	-
Water Bucket Makeup Line Isolation Valve	PCS-PL-V020	Yes	Yes	-	-/No	No	-	Transfer Open	-
PCCWST Long-Term Makeup Line Check Valve	PCS-PL-V039	Yes	Yes	-	-/No	No	-	Transfer Open	-
PCCWST Long-Term Makeup Drain Isolation	PCS-PL-V042	Yes	Yes	-	-/No	No	-	Transfer Close	-
PCS Discharge to SFS Pool Isolation Valve	PCS-PL-V045	Yes	Yes	-	-/No	No	-	Transfer Open	-
Recirc Header Discharge to PCCWST Isolation Valve	PCS-PL-V046	Yes	Yes	-	-/No	No	-	Transfer Close	-
PCCWST Drain Isolation Valve	PCS-PL-V049	Yes	Yes	-	-/No	No	-	Transfer Close	-
Recirc Header Discharge to SFS Pool Isolation Valve	PCS-PL-V050	Yes	Yes	-	-/No	No	-	Transfer Open/Close	-
PCCWST Discharge to SFS Pool Isolation Valve	PCS-PL-V051	Yes	Yes	-	-/No	No	-	Transfer Open/Close	-
PCS Water Delivery Flow Sensor	PCS-001	No	Yes	-	Yes/No	Yes	-	-	-

Table 2.2.2-1 (cont.)

Component Name	Tag No.	ASME Code Section III	Seismic Cat. I	Remotely Operated Valve	Class 1E/ Qual. for Harsh Envir.	Safety-Related Display	Control PMS/ DAS	Active Function	Loss of Motive Power Position
PCS Water Delivery Flow Sensor	PCS-002	No	Yes	-	Yes/No	Yes	-	-	-
PCS Water Delivery Flow Sensor	PCS-003	No	Yes	-	Yes/No	Yes	-	-	-
PCS Water Delivery Flow Sensor	PCS-004	No	Yes	-	Yes/No	Yes	-	-	-
Containment Pressure Sensor	PCS-005	No	Yes	-	Yes/Yes	Yes	-	-	-
Containment Pressure Sensor	PCS-006	No	Yes	-	Yes/Yes	Yes	-	-	-
Containment Pressure Sensor	PCS-007	No	Yes	-	Yes/Yes	Yes	-	-	-
Containment Pressure Sensor	PCS-008	No	Yes	-	Yes/Yes	Yes	-	-	-
PCCWST Water Level Sensor	PCS-010	No	Yes	-	Yes/No	Yes	-	-	-
PCCWST Water Level Sensor	PCS-011	No	Yes	-	Yes/No	Yes	-	-	-
High-range Containment Pressure Sensor	PCS-012	No	Yes	-	Yes/Yes	Yes	-	-	-
High-range Containment Pressure Sensor	PCS-013	No	Yes	-	Yes/Yes	Yes	-	-	-
High-range Containment Pressure Sensor	PCS-014	No	Yes	-	Yes/Yes	Yes	-	-	-

Note: Dash (-) indicates not applicable.

Table 2.2.2-2

Pipeline Name	Line Number	ASME Code Section III	Functional Capability Required
PCCWST Discharge Lines	PCS-PL-L001A/B/C/D	Yes	Yes
PCCWST Discharge Cross-connect Line	PCS-PL-L002	Yes	Yes
PCCWST Discharge Header Lines	PCS-PL-L003A/B PCS-PL-L005	Yes	Yes
Post-72-hour Supply Line Connection	PCS-PL-L051 PCS-PL-L054 PCS-PL-L065	Yes	Yes
Post-72-hour Containment Cooling Makeup From Supply Line Connections	PCS-PL-L004 PCS-PL-L007 PCS-PL-L008 PCS-PL-L023 PCS-PL-L050	Yes	Yes
Post-72-hour SFS Makeup From PCCWST	PCS-PL-L011 PCS-PL-L017 PCS-PL-L018 PCS-PL-L030* PCS-PL-L073	Yes	Yes
Post-72-hour SFS Makeup From Supply Line Connection	PCS-PL-L025 PCS-PL-L029 PCS-PL-L030* PCS-PL-L048 PCS-PL-L049	Yes	Yes

Note:

* Line PCS-PL-L030 is a common makeup line from both sources.

Table 2.2.2-3
Inspections, Tests, Analyses, and Acceptance Criteria

Design Commitment	Inspections, Tests, Analyses	Acceptance Criteria
1. The functional arrangement of the PCS is as described in the Design Description of this Section 2.2.2.	Inspection of the as-built system will be performed.	The as-built PCS conforms to the functional arrangement as described in the Design Description of this Section 2.2.2.
2.a) The components identified in Table 2.2.2-1 as ASME Code Section III are designed and constructed in accordance with ASME Code Section III requirements.	Inspection will be conducted of the as-built components as documented in the ASME design reports.	The ASME Code Section III design reports exist for the as-built components identified in Table 2.2.2-1 as ASME Code Section III.
2.b) The pipelines identified in Table 2.2.2-2 as ASME Code Section III are designed and constructed in accordance with ASME Code Section III requirements.	Inspection will be conducted of the as-built piping as documented in the ASME design reports.	The ASME Code Section III design reports exist for the as-built piping identified in Table 2.2.2-2 as ASME Code Section III.
3.a) Pressure boundary welds in components identified in Table 2.2.2-1 as ASME Code Section III meet ASME Code Section III requirements.	Inspection of the as-built pressure boundary welds will be performed in accordance with the ASME Code Section III.	A report exists and concludes that the ASME Code Section III requirements are met for non-destructive examination of pressure boundary welds.
3.b) Pressure boundary welds in the pipelines identified in Table 2.2.2-2 as ASME Code Section III meet ASME Code Section III requirements.	Inspection of the as-built pressure boundary welds will be performed in accordance with the ASME Code Section III.	A report exists and concludes that the ASME Code Section III requirements are met for non-destructive examination of pressure boundary welds.
4.a) The components identified in Table 2.2.2-1 as ASME Code Section III retain their pressure boundary integrity at their design pressure.	A hydrostatic test will be performed on the components required by the ASME Code Section III to be hydrostatically tested.	A report exists and concludes that the results of the hydrostatic test of the components identified in Table 2.2.2-1 as ASME Code Section III conform with the requirements of the ASME Code Section III.

Table 2.2.2-3 (cont.)
Inspections, Tests, Analyses, and Acceptance Criteria

Design Commitment	Inspections, Tests, Analyses	Acceptance Criteria
4.b) The pipelines identified in Table 2.2.2-2 as ASME Code Section III retain their pressure boundary integrity at their design pressure.	A hydrostatic test will be performed on the piping required by the ASME Code Section III to be hydrostatically tested.	A report exists and concludes that the results of the hydrostatic test of the piping identified in Table 2.2.2-2 as ASME Code Section III conform with the requirements of the ASME Code Section III.
5.a) The seismic Category I components identified in Table 2.2.2-1 can withstand seismic design basis loads without loss of safety function.	i) Inspection will be performed to verify that the seismic Category I components and valves identified in Table 2.2.2-1 are located on the Nuclear Island. ii) Type tests, analyses, or a combination of type tests and analyses of seismic Category I components will be performed. iii) Inspection will be performed for the existence of a report verifying that the as-built components including anchorage are seismically bounded by the tested or analyzed conditions.	i) The seismic Category I components identified in Table 2.2.2-1 are located on the Nuclear Island. ii) A report exists and concludes that the seismic Category I components can withstand seismic design basis loads without loss of safety function. iii) The report exists and concludes that the as-built components including anchorage are seismically bounded by the tested or analyzed conditions.
5.b) Each of the pipelines identified in Table 2.2.2-2 for which functional capability is required is designed to withstand combined normal and seismic design basis loads without a loss of its functional capability.	Inspection will be performed for the existence of a report concluding that the as-built pipelines meet the requirements for functional capability.	A report exists and concludes that each of the as-built pipelines identified in Table 2.2.2-2 for which functional capability is required meets the requirements for functional capability.
5.c) The PCCAWST can withstand a seismic event.	Inspection will be performed for the existence of a report verifying that the as-built PCCAWST and its anchorage are designed using seismic Category II methods and criteria.	A report exists and concludes that the as-built PCCAWST and its anchorage are designed using seismic Category II methods and criteria.

Table 2.2.2-3 (cont.)
Inspections, Tests, Analyses, and Acceptance Criteria

Design Commitment	Inspections, Tests, Analyses	Acceptance Criteria
6.a) The Class 1E components identified in Table 2.2.2-1 as being qualified for a harsh environment can withstand the environmental conditions that would exist before, during, and following a design basis accident without loss of safety function for the time required to perform the safety function.	i) Type tests or a combination of type tests and analyses will be performed on Class 1E components located in a harsh environment.	i) A report exists and concludes that the Class 1E components identified in Table 2.2.2-1 as being qualified for a harsh environment can withstand the environmental conditions that would exist before, during, and following a design basis accident without loss of safety function for the time required to perform the safety function.
	ii) Inspection will be performed of the as-built Class 1E components and the associated wiring, cables, and terminations located in a harsh environment.	ii) A report exists and concludes that the as-built Class 1E components and the associated wiring, cables, and terminations identified in Table 2.2.2-1 as being qualified for a harsh environment are bounded by type tests, analyses, or a combination of type tests and analyses.
6.b) The Class 1E components identified in Table 2.2.2-1 are powered from their respective Class 1E division.	Testing will be performed by providing a simulated test signal in each Class 1E division.	A simulated test signal exists at the Class 1E components identified in Table 2.2.2-1 when the assigned Class 1E division is provided the test signal.
6.c) Separation is provided between PCS Class 1E divisions, and between Class 1E divisions and non-Class 1E cable.	See Tier 1 Material, Table 3.3-6, item 7.d.	See Tier 1 Material, Table 3.3-6, item 7.d.

Table 2.2.2-3 (cont.)
Inspections, Tests, Analyses, and Acceptance Criteria

Design Commitment	Inspections, Tests, Analyses	Acceptance Criteria
7.a) The PCS delivers water from the PCCWST to the outside, top of the containment vessel.	i) Testing will be performed to measure the PCCWST delivery rate from each one of the three parallel flow paths.	i) When tested, each one of the three flow paths delivers water at greater than or equal to: – 469.1 gpm at a PCCWST water level of 27.4 ft + 0.2, - 0.0 ft above the tank floor – 226.6 gpm when the PCCWST water level uncovers the first (i.e. tallest) standpipe – 176.3 gpm when the PCCWST water level uncovers the second tallest standpipe – 144.2 gpm when the PCCWST water level uncovers the third tallest standpipe
	ii) Testing and or analysis will be performed to demonstrate the PCCWST inventory provides 72 hours of adequate water flow.	ii) When tested and/or analyzed with all flow paths delivering and an initial water level at 27.4 + 0.2, - 0.00 ft, the PCCWST water inventory provides greater than or equal to 72 hours of flow, and the flow rate at 72 hours is greater than or equal to 100.7 gpm.
	iii) Inspection will be performed to determine the PCCWST standpipes elevations.	iii) The elevations of the standpipes above the tank floor are: – 16.8 ft ± 0.2 ft – 20.3 ft ± 0.2 ft – 24.1 ft ± 0.2 ft

Table 2.2.2-3 (cont.)
Inspections, Tests, Analyses, and Acceptance Criteria

Design Commitment	Inspections, Tests, Analyses	Acceptance Criteria
7.b) The PCS wets the outside surface of the containment vessel. The inside and the outside of the containment vessel above the operating deck are coated with an inorganic zinc material.	i) Testing will be performed to measure the outside wetted surface of the containment vessel with one of the three parallel flow paths delivering water to the top of the containment vessel.	i) A report exists and concludes that when the water in the PCCWST uncovers the standpipes at the following levels, the water delivered by one of the three parallel flow paths to the containment shell provides coverage measured at the spring line that is equal to or greater than the stated coverages. - 24.1 ± 0.2 ft above the tank floor; at least 90% of the perimeter is wetted. - 20.3 ± 0.2 ft above the tank floor; at least 72.9% of the perimeter is wetted. - 16.8 ± 0.2 ft above the tank floor; at least 59.6% of the perimeter is wetted.
	ii) Inspection of the containment vessel exterior coating will be conducted.	ii) A report exists and concludes that the containment vessel exterior surface is coated with an inorganic zinc coating above elevation 135'-3".
	iii) Inspection of the containment vessel interior coating will be conducted.	iii) A report exists and concludes that the containment vessel interior surface is coated with an inorganic zinc coating above 7' above the operating deck.
7.c) The PCS provides air flow over the outside of the containment vessel by a natural circulation air flow path from the air inlets to the air discharge structure.	Inspections of the air flow path segments will be performed.	Flow paths exist at each of the following locations: – Air inlets – Base of the outer annulus – Base of the inner annulus – Discharge structure
7.d) The PCS drains the excess water from the outside of the containment vessel through the two upper annulus drains.	Testing will be performed to verify the upper annulus drain flow performance.	With a water level within the upper annulus 10" ± 1" above the annulus drain inlet, the flow rate through each drain is greater than or equal to 525 gpm.

Table 2.2.2-3 (cont.)
Inspections, Tests, Analyses, and Acceptance Criteria

Design Commitment	Inspections, Tests, Analyses	Acceptance Criteria
7.e) The PCS provides a flow path for long-term water makeup to the PCCWST.	i) See item 1 in this table. ii) Testing will be performed to measure the delivery rate from the long-term makeup connection to the PCCWST.	i) See item 1 in this table. ii) With a water supply connected to the PCS long-term makeup connection, each PCS recirculation pump delivers greater than or equal to 100 gpm when tested separately.
7.f) The PCS provides a flow path for long-term water makeup from the PCCWST to the spent fuel pool.	i) Testing will be performed to measure the delivery rate from the PCCWST to the spent fuel pool. ii) Inspection of the PCCWST will be performed.	i) With the PCCWST water level at 27.4 ft + 0.2, - 0.0 ft above the bottom of the tank, the flow path from the PCCWST to the spent fuel pool delivers greater than or equal to 118 gpm. ii) The volume of the PCCWST is greater than 756,700 gallons.
8.a) The PCCAWST contains an inventory of cooling water sufficient for PCS containment cooling from hour 72 through day 7.	Inspection of the PCCAWST will be performed.	The volume of the PCCAWST is greater than 780,000 gallons.
8.b) The PCS delivers water from the PCCAWST to the PCCWST and spent fuel pool simultaneously.	Testing will be performed to measure the delivery rate from the PCCAWST to the PCCWST and spent fuel pool simultaneously.	With PCCASWST aligned to the suction of the recirculation pumps, each pump delivers greater than or equal to 100 gpm to the PCCWST and 35 gpm to the spent fuel pool simultaneously when each pump is tested separately.
8.c) The PCCWST includes a water inventory for the fire protection system.	See Tier 1 Material, Table 2.3.4-2, items 1 and 2.	See Tier 1 Material, Table 2.3.4-2, items 1 and 2.
9. Safety-related displays identified in Table 2.2.2-1 can be retrieved in the MCR.	Inspection will be performed for retrievability of the safety-related displays in the MCR.	Safety-related displays identified in Table 2.2.2-1 can be retrieved in the MCR.
10.a) Controls exist in the MCR to cause the remotely operated valves identified in Table 2.2.2-1 to perform active functions.	Stroke testing will be performed on the remotely operated valves identified in Table 2.2.2-1 using the controls in the MCR.	Controls in the MCR operate to cause remotely operated valves identified in Table 2.2.2-1 to perform active functions.

Table 2.2.2-3 (cont.)
Inspections, Tests, Analyses, and Acceptance Criteria

Design Commitment	Inspections, Tests, Analyses	Acceptance Criteria
10.b) The valves identified in Table 2.2.2-1 as having PMS control perform an active safety function after receiving a signal from the PMS.	Testing will be performed on the remotely operated valves in Table 2.2.2-1 using real or simulated signals into the PMS.	The remotely operated valves identified in Table 2.2.2-1 as having PMS control perform the active function identified in the table after receiving a signal from the PMS.
10.c) The valves identified in Table 2.2.2-1 as having DAS control perform an active safety function after receiving a signal from the DAS.	Testing will be performed on the remotely operated valves listed in Table 2.2.2-1 using real or simulated signals into the DAS.	The remotely operated valves identified in Table 2.2.2-1 as having DAS control perform the active function identified in the table after receiving a signal from the DAS.
11.a) The motor-operated valves identified in Table 2.2.2-1 perform an active safety-related function to change position as indicated in the table.	i) Tests or type tests of motor-operated valves will be performed to demonstrate the capability of the valve to operate under its design conditions. ii) Inspection will be performed for the existence of a report verifying that the capability of the as-built motor-operated valves bound the tested conditions. iii) Tests of the motor-operated valves will be performed under preoperational flow, differential pressure, and temperature conditions.	i) A test report exists and concludes that each motor-operated valve changes position as indicated in Table 2.2.2-1 under design conditions. ii) A report exists and concludes that the capability of the as-built motor-operated valves bound the tested conditions. iii) Each motor-operated valve changes position as indicated in Table 2.2.2-1 under preoperational test conditions.
11.b) After loss of motive power, the remotely operated valves identified in Table 2.2.2-1 assume the indicated loss of motive power position.	Testing of the remotely operated valves will be performed under the conditions of loss of motive power.	After loss of motive power, each remotely operated valve identified in Table 2.2.2-1 assumes the indicated loss of motive power position.

Table 2.2.2-4		
Component Name	**Tag No.**	**Component Location**
PCCWST	PCS-MT-01	Shield Building
PCCAWST	PCS-MT-05	Yard
Recirculation Pump A	PCS-MP-01A	Auxiliary Building
Recirculation Pump B	PCS-MP-01B	Auxiliary Building

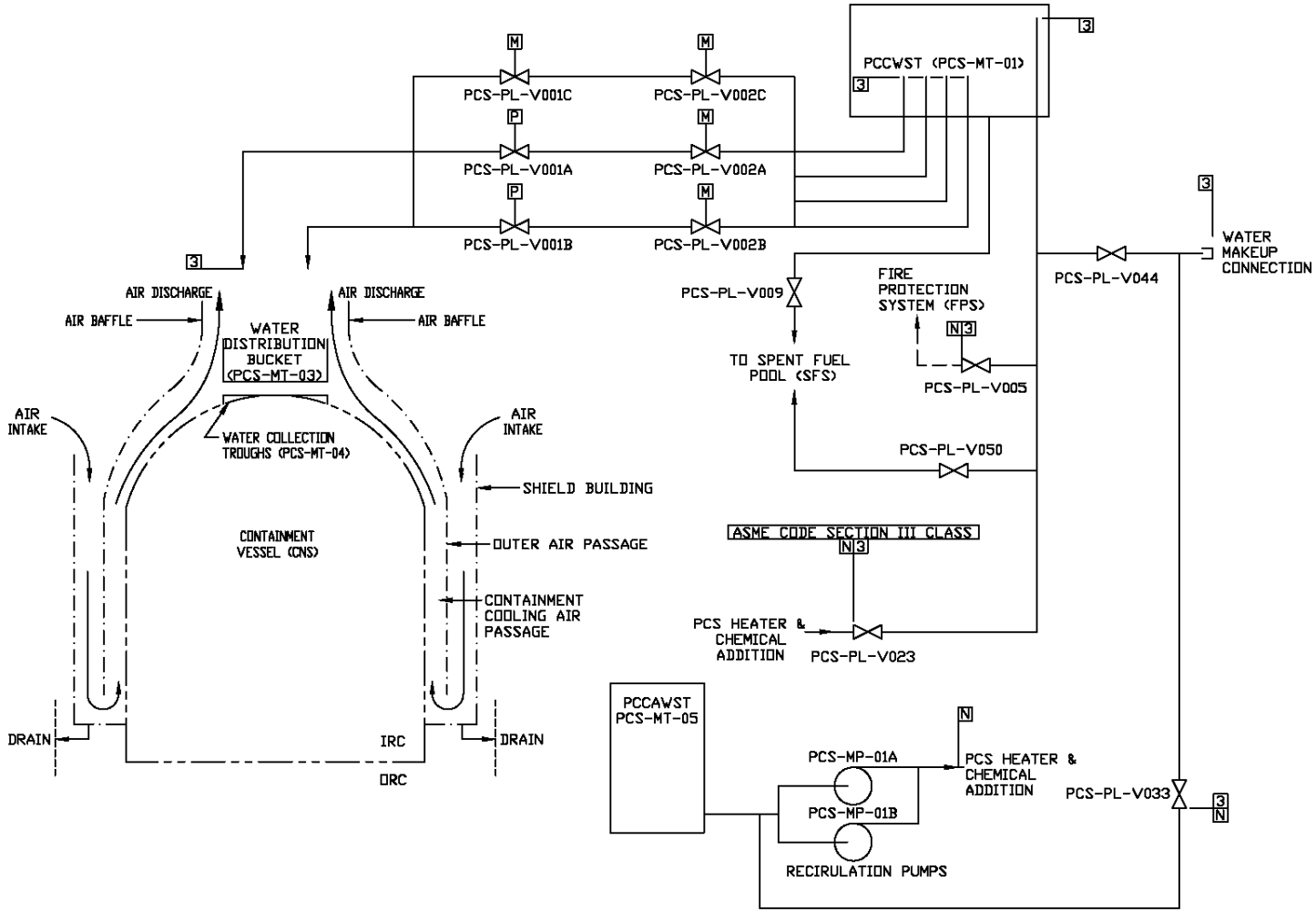

Figure 2.2.2-1
Passive Containment Cooling System

2.2.3 Passive Core Cooling System

Design Description

The passive core cooling system (PXS) provides emergency core cooling during design basis events.

The PXS is as shown in Figure 2.2.3-1 and the component locations of the PXS are as shown in Table 2.2.3-5.

1. The functional arrangement of the PXS is as described in the Design Description of this Section 2.2.3.

2. a) The components identified in Table 2.2.3-1 as ASME Code Section III are designed and constructed in accordance with ASME Code Section III requirements.

   b) The piping identified in Table 2.2.3-2 as ASME Code Section III is designed and constructed in accordance with ASME Code Section III requirements.

3. a) Pressure boundary welds in components identified in Table 2.2.3-1 as ASME Code Section III meet ASME Code Section III requirements.

   b) Pressure boundary welds in piping identified in Table 2.2.3-2 as ASME Code Section III meet ASME Code Section III requirements.

4. a) The components identified in Table 2.2.3-1 as ASME Code Section III retain their pressure boundary integrity at their design pressure.

   b) The piping identified in Table 2.2.3-2 as ASME Code Section III retains its pressure boundary integrity at its design pressure.

5. a) The seismic Category I equipment identified in Table 2.2.3-1 can withstand seismic design basis loads without loss of safety function.

   b) Each of the lines identified in Table 2.2.3-2 for which functional capability is required is designed to withstand combined normal and seismic design basis loads without a loss of its functional capability.

6. Each of the as-built lines identified in Table 2.2.3-2 as designed for leak before break (LBB) meets the LBB criteria, or an evaluation is performed of the protection from the dynamic effects of a rupture of the line.

7. a) The Class 1E equipment identified in Table 2.2.3-1 as being qualified for a harsh environment can withstand the environmental conditions that would exist before, during, and following a design basis accident without loss of safety function for the time required to perform the safety function.

   b) The Class 1E components identified in Table 2.2.3-1 are powered from their respective Class 1E division.

c) Separation is provided between PXS Class 1E divisions, and between Class 1E divisions and non-Class 1E cable.

8. The PXS provides the following safety-related functions:

   a) The PXS provides containment isolation of the PXS lines penetrating the containment.

   b) The PRHR HX provides core decay heat removal during design basis events.

   c) The CMTs, accumulators, in-containment refueling water storage tank (IRWST) and containment recirculation provide reactor coolant system (RCS) makeup, boration, and safety injection during design basis events.

   d) The PXS provides pH adjustment of water flooding the containment following design basis accidents.

9. The PXS has the following features:

   a) The PXS provides a function to cool the outside of the reactor vessel during a severe accident.

   b) The accumulator discharge check valves (PXS-PL-V028A/B and V029A/B) are of a different check valve type than the CMT discharge check valves (PXS-PL-V016A/B and V017A/B).

   c) The equipment listed in Table 2.2.3-6 has sufficient thermal lag to withstand the effects of identified hydrogen burns associated with severe accidents.

10. Safety-related displays of the parameters identified in Table 2.2.3-1 can be retrieved in the main control room (MCR).

11. a) Controls exist in the MCR to cause the remotely operated valves identified in Table 2.2.3-1 to perform their active function(s).

    b) The valves identified in Table 2.2.3-1 as having protection and safety monitoring system (PMS) control perform their active function after receiving a signal from the PMS.

    c) The valves identified in Table 2.2.3-1 as having diverse actuation system (DAS) control perform their active function after receiving a signal from the DAS.

12. a) The squib valves and check valves identified in Table 2.2.3-1 perform an active safety-related function to change position as indicated in the table.

    b) After loss of motive power, the remotely operated valves identified in Table 2.2.3-1 assume the indicated loss of motive power position.

13. Displays of the parameters identified in Table 2.2.3-3 can be retrieved in the MCR.

Inspection, Tests, Analyses, and Acceptance Criteria

Table 2.2.3-4 specifies the inspections, tests, analyses, and associated acceptance criteria for the PXS.

Table 2.2.3-1

Equipment Name	Tag No.	ASME Code Section III	Seismic Cat. I	Remotely Operated Valve	Class 1E/ Qual. Harsh Envir.	Safety-Related Display	Control PMS/ DAS	Active Function	Loss of Motive Power Position
Passive Residual Heat Removal Heat Exchanger (PRHR HX)	PXS-ME-01	Yes	Yes	-	- / -	-	- / -	-	-
Accumulator Tank A	PXS-MT-01A	Yes	Yes	-	- / -	-	- / -	-	-
Accumulator Tank B	PXS-MT-01B	Yes	Yes	-	- / -	-	- / -	-	-
Core Makeup Tank (CMT) A	PXS-MT-02A	Yes	Yes	-	- / -	-	- / -	-	-
CMT B	PXS-MT-02B	Yes	Yes	-	- / -	-	- / -	-	-
IRWST	PXS-MT-03	No	Yes	-	- / -	-	- / -	-	-
IRWST Screen A	PXS-MY-Y01A	No	Yes	-	- / -	-	- / -	-	-
IRWST Screen B	PXS-MY-Y01B	No	Yes	-	- / -	-	- / -	-	-
IRWST Screen C	PXS-MY-Y01C	No	Yes	-	- / -	-	- / -	-	-
Containment Recirculation Screen A	PXS-MY-Y02A	No	Yes	-	- / -	-	- / -	-	-
Containment Recirculation Screen B	PXS-MY-Y02B	No	Yes	-	- / -	-	- / -	-	-
pH Adjustment Basket A	PXS-MY-Y03A	No	Yes	-	- / -	-	- / -	-	-
pH Adjustment Basket B	PXS-MY-Y03B	No	Yes	-	- / -	-	- / -	-	-
pH Adjustment Basket C	PXS-MY-Y04A	No	Yes		- / -		- / -		
pH Adjustment Basket D	PXS-MY-Y04B	No	Yes		- / -		- / -		
CMT A Inlet Isolation Motor-operated Valve	PXS-PL-V002A	Yes	Yes	Yes	Yes/Yes	Yes (Position)	Yes/No	None	As Is
CMT B Inlet Isolation Motor-operated Valve	PXS-PL-V002B	Yes	Yes	Yes	Yes/Yes	Yes (Position)	Yes/No	None	As Is

Note: Dash (-) indicates not applicable.

Table 2.2.3-1 (cont.)

Equipment Name	Tag No.	ASME Code Section III	Seismic Cat. I	Remotely Operated Valve	Class 1E/ Qual. Harsh Envir.	Safety-Related Display	Control PMS/ DAS	Active Function	Loss of Motive Power Position
CMT A Discharge Isolation Valve	PXS-PL-V014A	Yes	Yes	Yes	Yes/Yes	Yes (Position)	Yes/Yes	Transfer Open	Open
CMT B Discharge Isolation Valve	PXS-PL-V014B	Yes	Yes	Yes	Yes/Yes	Yes (Position)	Yes/Yes	Transfer Open	Open
CMT A Discharge Isolation Valve	PXS-PL-V015A	Yes	Yes	Yes	Yes/Yes	Yes (Position)	Yes/Yes	Transfer Open	Open
CMT B Discharge Isolation Valve	PXS-PL-V015B	Yes	Yes	Yes	Yes/Yes	Yes (Position)	Yes/Yes	Transfer Open	Open
CMT A Discharge Check Valve	PXS-PL-V016A	Yes	Yes	No	- / -	No	- / -	Transfer Open/ Transfer Closed	-
CMT B Discharge Check Valve	PXS-PL-V016B	Yes	Yes	No	- / -	No	- / -	Transfer Open/ Transfer Closed	-
CMT A Discharge Check Valve	PXS-PL-V017A	Yes	Yes	No	- / -	No	- / -	Transfer Open/ Transfer Closed	-
CMT B Discharge Check Valve	PXS-PL-V017B	Yes	Yes	No	- / -	No	- / -	Transfer Open/ Transfer Closed	-

Note: Dash (-) indicates not applicable.

Table 2.2.3-1 (cont.)

Equipment Name	Tag No.	ASME Code Section III	Seismic Cat. I	Remotely Operated Valve	Class 1E/ Qual. Harsh Envir.	Safety-Related Display	Control PMS/ DAS	Active Function	Loss of Motive Power Position
Accumulator A Pressure Relief Valve	PXS-PL-V022A	Yes	Yes	No	- / -	No	- / -	Transfer Open/ Transfer Closed	-
Accumulator B Pressure Relief Valve	PXS-PL-V022B	Yes	Yes	No	- / -	No	- / -	Transfer Open/ Transfer Closed	-
Accumulator A Discharge Isolation Valve	PXS-PL-V027A	Yes	Yes	Yes	- / -	Yes	- /No	None	As Is
Accumulator B Discharge Isolation Valve	PXS-PL-V027B	Yes	Yes	Yes	- / -	Yes	- /No	None	As Is
Accumulator A Discharge Check Valve	PXS-PL-V028A	Yes	Yes	No	- / -	No	- / -	Transfer Open/ Close	-
Accumulator B Discharge Check Valve	PXS-PL-V028B	Yes	Yes	No	- / -	No	- / -	Transfer Open/ Close	-
Accumulator A Discharge Check Valve	PXS-PL-V029A	Yes	Yes	No	- / -	No	- / -	Transfer Open/ Close	-
Accumulator B Discharge Check Valve	PXS-PL-V029B	Yes	Yes	No	- / -	No	- / -	Transfer Open/ Close	-

Note: Dash (-) indicates not applicable.

Table 2.2.3-1 (cont.)

Equipment Name	Tag No.	ASME Code Section III	Seismic Cat. I	Remotely Operated Valve	Class 1E/ Qual. Harsh Envir.	Safety-Related Display	Control PMS/ DAS	Active Function	Loss of Motive Power Position
Nitrogen Supply Containment Isolation Valve	PXS-PL-V042	Yes	Yes	Yes	Yes/No	Yes (position)	Yes/No	Transfer Closed	Close
Nitrogen Supply Containment Isolation Check Valve	PXS-PL-V043	Yes	Yes	No	- / -	No	- / -	Transfer Closed	-
PRHR HX Inlet Isolation Motor-operated Valve	PXS-PL-V101	Yes	Yes	Yes	Yes/Yes	Yes (position)	Yes/No	None	As Is
PRHR HX Control Valve	PXS-PL-V108A	Yes	Yes	Yes	Yes/Yes	Yes (Position)	Yes/Yes	Transfer Open	Open
PRHR HX Control Valve	PXS-PL-V108B	Yes	Yes	Yes	Yes/Yes	Yes (Position)	Yes/Yes	Transfer Open	Open
Containment Recirculation A Isolation Motor-operated Valve	PXS-PL-V117A	Yes	Yes	Yes	Yes/Yes	Yes (position)	Yes/Yes	None	As Is
Containment Recirculation B Isolation Motor-operated Valve	PXS-PL-V117B	Yes	Yes	Yes	Yes/Yes	Yes (position)	Yes/Yes	None	As Is
Containment Recirculation A Squib Valve	PXS-PL-V118A	Yes	Yes	Yes	Yes/Yes	Yes (Position)	Yes/Yes	Transfer Open	As Is
Containment Recirculation B Squib Valve	PXS-PL-V118B	Yes	Yes	Yes	Yes/Yes	Yes (Position)	Yes/Yes	Transfer Open	As Is

Note: Dash (-) indicates not applicable.

Table 2.2.3-1 (cont.)

Equipment Name	Tag No.	ASME Code Section III	Seismic Cat. I	Remotely Operated Valve	Class 1E/ Qual. Harsh Envir.	Safety-Related Display	Control PMS/ DAS	Active Function	Loss of Motive Power Position
Containment Recirculation A Check Valve	PXS-PL-V119A	Yes	Yes	No	- / -	No	- / -	Transfer Open/ Transfer Closed	-
Containment Recirculation B Check Valve	PXS-PL-V119B	Yes	Yes	No	- / -	No	- / -	Transfer Open/ Transfer Closed	-
Containment Recirculation A Squib Valve	PXS-PL-V120A	Yes	Yes	Yes	Yes/Yes	Yes (Position)	Yes/Yes	Transfer Open	As Is
Containment Recirculation B Squib Valve	PXS-PL-V120B	Yes	Yes	Yes	Yes/Yes	Yes (Position)	Yes/Yes	Transfer Open	As Is
IRWST Injection A Check Valve	PXS-PL-V122A	Yes	Yes	No	- / -	No	- / -	Transfer Open/ Transfer Closed	-
IRWST Injection B Check Valve	PXS-PL-V122B	Yes	Yes	No	- / -	No	- / -	Transfer Open/ Transfer Closed	-
IRWST Injection A Squib Valve	PXS-PL-V123A	Yes	Yes	Yes	Yes/Yes	Yes (Position)	Yes/Yes	Transfer Open	As Is
IRWST Injection B Squib Valve	PXS-PL-V123B	Yes	Yes	Yes	Yes/Yes	Yes (Position)	Yes/Yes	Transfer Open	As Is

Note: Dash (-) indicates not applicable.

Table 2.2.3-1 (cont.)

Equipment Name	Tag No.	ASME Code Section III	Seismic Cat. I	Remotely Operated Valve	Class 1E/ Qual. Harsh Envir.	Safety-Related Display	Control PMS/ DAS	Active Function	Loss of Motive Power Position
IRWST Injection A Check Valve	PXS-PL-V124A	Yes	Yes	No	- / -	No	- / -	Transfer Open/ Transfer Closed	-
IRWST Injection B Check Valve	PXS-PL-V124B	Yes	Yes	No	- / -	No	- / -	Transfer Open/ Transfer Closed	-
IRWST Injection A Squib Valve	PXS-PL-V125A	Yes	Yes	Yes	Yes/Yes	Yes (Position)	Yes/Yes	Transfer Open	As Is
IRWST Injection B Squib Valve	PXS-PL-V125B	Yes	Yes	Yes	Yes/Yes	Yes (Position)	Yes/Yes	Transfer Open	As Is
IRWST Gutter Isolation Valve	PXS-PL-V130A	Yes	Yes	Yes	Yes/Yes	Yes (Position)	Yes/Yes	Transfer Closed	Closed
IRWST Gutter Isolation Valve	PXS-PL-V130B	Yes	Yes	Yes	Yes/Yes	Yes (Position)	Yes/Yes	Transfer Closed	Closed
CMT A Level Sensor	PXS-011A	-	Yes	-	Yes/Yes	Yes	- / -	-	-
CMT A Level Sensor	PXS-011B	-	Yes	-	Yes/Yes	Yes	- / -	-	-
CMT A Level Sensor	PXS-011C	-	Yes	-	Yes/Yes	Yes	- / -	-	-
CMT A Level Sensor	PXS-011D	-	Yes	-	Yes/Yes	Yes	- / -	-	-

Note: Dash (-) indicates not applicable.

Table 2.2.3-1 (cont.)

Equipment Name	Tag No.	ASME Code Section III	Seismic Cat. I	Remotely Operated Valve	Class 1E/ Qual. Harsh Envir.	Safety-Related Display	Control PMS/ DAS	Active Function	Loss of Motive Power Position
CMT B Level Sensor	PXS-012A	-	Yes	-	Yes/Yes	Yes	-/-	-	-
CMT B Level Sensor	PXS-012B	-	Yes	-	Yes/Yes	Yes	-/-	-	-
CMT B Level Sensor	PXS-012C	-	Yes	-	Yes/Yes	Yes	-/-	-	-
CMT B Level Sensor	PXS-012D	-	Yes	-	Yes/Yes	Yes	-/-	-	-
CMT A Level Sensor	PXS-013A	-	Yes	-	Yes/Yes	Yes	-/-	-	-
CMT A Level Sensor	PXS-013B	-	Yes	-	Yes/Yes	Yes	-/-	-	-
CMT A Level Sensor	PXS-013C	-	Yes	-	Yes/Yes	Yes	-/-	-	-
CMT A Level Sensor	PXS-013D	-	Yes	-	Yes/Yes	Yes	-/-	-	-
CMT B Level Sensor	PXS-014A	-	Yes	-	Yes/Yes	Yes	- / -	-	-
CMT B Level Sensor	PXS-014B	-	Yes	-	Yes/Yes	Yes	- / -	-	-
CMT B Level Sensor	PXS-014C	-	Yes	-	Yes/Yes	Yes	- / -	-	-
CMT B Level Sensor	PXS-014D	-	Yes	-	Yes/Yes	Yes	- / -	-	-
IRWST Level Sensor	PXS-045	-	Yes	-	Yes/Yes	Yes	- / -	-	-
IRWST Level Sensor	PXS-046	-	Yes	-	Yes/Yes	Yes	- / -	-	-
IRWST Level Sensor	PXS-047	-	Yes	-	Yes/Yes	Yes	- / -	-	-
IRWST Level Sensor	PXS-048	-	Yes	-	Yes/Yes	Yes	- / -	-	-
PRHR HX Flow Sensor	PXS-049A	-	Yes	-	Yes/Yes	Yes	- / -	-	-
PRHR HX Flow Sensor	PXS-049B	-	Yes	-	Yes/Yes	Yes	- / -	-	-

Note: Dash (-) indicates not applicable.

Table 2.2.3-1 (cont.)

Equipment Name	Tag No.	ASME Code Section III	Seismic Cat. I	Remotely Operated Valve	Class 1E/ Qual. Harsh Envir.	Safety-Related Display	Control PMS/ DAS	Active Function	Loss of Motive Power Position
Containment Flood-up Level Sensor	PXS-050	-	Yes	-	Yes/Yes	Yes	-/-	-	-
Containment Flood-up Level Sensor	PXS-051	-	Yes	-	Yes/Yes	Yes	-/-	-	-
Containment Flood-up Level Sensor	PXS-052	-	Yes	-	Yes/Yes	Yes	-/-	-	-
RNS Suction Leak Test Valve	PXS-PL-V208A	Yes	Yes	No	- / -	No	-/-	-	-

Note: Dash (-) indicates not applicable.

Table 2.2.3-2

Line Name	Line Number	ASME Code Section III	Leak Before Break	Functional Capability Required
PRHR HX inlet line from hot leg and outlet line to steam generator channel head	RCS-L134, PXS-L102, PXS-L103, PXS-L104A, PXS-L104B, PXS-L105, RCS-L113	Yes	Yes	Yes
	PXS-L107	Yes	Yes	No
CMT A inlet line from cold leg C and outlet line to reactor vessel direct vessel injection (DVI) nozzle A	RCS-L118A, PXS-L007A, PXS-L015A, PXS-L016A, PXS-L017A, PXS-L018A, PXS-L020A, PXS-L021A	Yes	Yes	Yes
	PXS-L019A, PXS-L070A	Yes	Yes	No
CMT B inlet line from cold leg D and outlet line to reactor vessel DVI nozzle B	RCS-L118B, PXS-L007B, PXS-L015B, PXS-L016B, PXS-L017B, PXS-L018B, PXS-L020B, PXS-L021B	Yes	Yes	Yes
	PXS-L019B, PXS-L070B	Yes	Yes	No
Accumulator A discharge line to DVI line A	PXS-L025A, PXS-L027A, PXS-L029A	Yes	Yes	Yes
Accumulator B discharge line to DVI line B	PXS-L025B, PXS-L027B, PXS-L029B	Yes	Yes	Yes
IRWST injection line A to DVI line A	PXS-L125A, PXS-L127A	Yes	Yes	Yes
	PXS-L123A, PXS-L124A, PXS-L118A, PXS-L117A, PXS-L116A, PXS-L112A	Yes	No	Yes
IRWST injection line B to DVI line B	PXS-L125B, PXS-L127B	Yes	Yes	Yes
	PXS-L123B, PXS-L124B, PXS-L118B, PXS-L117B, PXS-L116B, PXS-L114B, PXS-L112B, PXS-L120	Yes	No	Yes

Table 2.2.3-2 (cont.)

Line Name	Line Number	ASME Code Section III	Leak Before Break	Functional Capability Required
IRWST screen cross-connect line	PXS-L180A, PXS-L180B	Yes	No	Yes
Containment recirculation line A	PXS-L113A, PXS-L131A, PXS-L132A	Yes	No	Yes
Containment recirculation line B	PXS-L113B, PXS-L131B, PXS-L132B	Yes	No	Yes
IRWST gutter drain line	PXS-L142A, PXS-L142B	Yes	No	Yes
	PXS-L141A, PXS-L141B	Yes	No	No

Table 2.2.3-3			
Equipment	**Tag No.**	**Display**	**Control Function**
CMT A Discharge Isolation Valve (Position)	PXS-PL-V014A	Yes (Position)	-
CMT B Discharge Isolation Valve (Position)	PXS-PL-V014B	Yes (Position)	-
CMT A Discharge Isolation Valve (Position)	PXS-PL-V015A	Yes (Position)	-
CMT B Discharge Isolation Valve (Position)	PXS-PL-V015B	Yes (Position)	-
Accumulator A Nitrogen Vent Valve (Position)	PXS-PL-V021A	Yes (Position)	-
Accumulator B Nitrogen Vent Valve (Position)	PXS-PL-V021B	Yes (Position)	-
Accumulator A Discharge Isolation Valve (Position)	PXS-PL-V027A	Yes (Position)	-
Accumulator B Discharge Isolation Valve (Position)	PXS-PL-V027B	Yes (Position)	-
PRHR HX Control Valve (Position)	PXS-PL-V108A	Yes (Position)	-
PRHR HX Control Valve (Position)	PXS-PL-V108B	Yes (Position)	-
Containment Recirculation A Isolation Valve	PXS-PL-V017A	Yes (Position)	-
Containment Recirculation B Isolation Valve	PXS-PL-V017B	Yes (Position)	-
Containment Recirculation A Isolation Valve (Position)	PXS-PL-V118A	Yes (Position)	-
Containment Recirculation B Isolation Valve (Position)	PXS-PL-V118B	Yes (Position)	-
Containment Recirculation A Isolation Valve (Position)	PXS-PL-V120A	Yes (Position)	-
Containment Recirculation B Isolation Valve (Position)	PXS-PL-V120B	Yes (Position)	-
IRWST Line A Isolation Valve (Position)	PXS-PL-V121A	Yes (Position)	-
IRWST Line B Isolation Valve (Position)	PXS-PL-V121B	Yes (Position)	-
IRWST Injection A Isolation Squib (Position)	PXS-PL-V123A	Yes (Position)	-

Note: Dash (-) indicates not applicable.

Table 2.2.3-3 (cont.)			
Equipment	**Tag No.**	**Display**	**Control Function**
IRWST Injection B Isolation Squib (Position)	PXS-PL-V123B	Yes (Position)	-
IRWST Injection A Isolation Squib (Position)	PXS-PL-V125A	Yes (Position)	-
IRWST Injection B Isolation Squib (Position)	PXS-PL-V125B	Yes (Position)	-
IRWST Gutter Bypass Isolation Valve (Position)	PXS-PL-V130A	Yes (Position)	-
IRWST Gutter Bypass Isolation Valve (Position)	PXS-PL-V130B	Yes (Position)	-
Accumulator A Level Sensor	PXS-JE-L021	Yes	-
Accumulator B Level Sensor	PXS-JE-L022	Yes	-
Accumulator A Level Sensor	PXS-JE-L023	Yes	-
Accumulator B Level Sensor	PXS-JE-L024	Yes	-
PRHR HX Inlet Temperature Sensor	PXS-JE-T064	Yes	-
IRWST Surface Temperature Sensor	PXS-JE-T041	Yes	-
IRWST Surface Temperature Sensor	PXS-JE-T042	Yes	-
IRWST Bottom Temperature Sensor	PXS-JE-T043	Yes	-
IRWST Bottom Temperature Sensor	PXS-JE-T044	Yes	-

Note: Dash (-) indicates not applicable.

Table 2.2.3-4
Inspections, Tests, Analyses, and Acceptance Criteria

Design Commitment	Inspections, Tests, Analyses	Acceptance Criteria
1. The functional arrangement of the PXS is as described in the Design Description of this Section 2.2.3.	Inspection of the as-built system will be performed.	The as-built PXS conforms with the functional arrangement as described in the Design Description of this Section 2.2.3.
2.a) The components identified in Table 2.2.3-1 as ASME Code Section III are designed and constructed in accordance with ASME Code Section III requirements.	Inspection will be conducted of the as-built components as documented in the ASME design reports.	The ASME Code Section III design reports exist for the as-built components identified in Table 2.2.3-1 as ASME Code Section III.
2.b) The piping identified in Table 2.2.3-2 as ASME Code Section III is designed and constructed in accordance with ASME Code Section III requirements.	Inspection will be conducted of the as-built piping as documented in the ASME design reports.	The ASME Code Section III design reports exist for the as-built piping identified in Table 2.2.3-2 as ASME Code Section III.
3.a) Pressure boundary welds in components identified in Table 2.2.3-1 as ASME Code Section III meet ASME Code Section III requirements.	Inspection of the as-built pressure boundary welds will be performed in accordance with the ASME Code Section III.	A report exists and concludes that the ASME Code Section III requirements are met for non-destructive examination of pressure boundary welds.
3.b) Pressure boundary welds in piping identified in Table 2.2.3-2 as ASME Code Section III meet ASME Code Section III requirements.	Inspection of the as-built pressure boundary welds will be performed in accordance with the ASME Code Section III.	A report exists and concludes that the ASME Code Section III requirements are met for non-destructive examination of pressure boundary welds.
4.a) The components identified in Table 2.2.3-1 as ASME Code Section III retain their pressure boundary integrity at their design pressure.	A hydrostatic test will be performed on the components required by the ASME Code Section III to be hydrostatically tested.	A report exists and concludes that the results of the hydrostatic test of the components identified in Table 2.2.3-1 as ASME Code Section III conform with the requirements of the ASME Code Section III.
4.b) The piping identified in Table 2.2.3-2 as ASME Code Section III retains its pressure boundary integrity at its design pressure.	A hydrostatic test will be performed on the piping required by the ASME Code Section III to be hydrostatically tested.	A report exists and concludes that the results of the hydrostatic test of the piping identified in Table 2.2.3-2 as ASME Code Section III conform with the requirements of the ASME Code Section III.

Table 2.2.3-4 (cont.)
Inspections, Tests, Analyses, and Acceptance Criteria

Design Commitment	Inspections, Tests, Analyses	Acceptance Criteria
5.a) The seismic Category I equipment identified in Table 2.2.3-1 can withstand seismic design basis loads without loss of safety function.	i) Inspection will be performed to verify that the seismic Category I equipment and valves identified in Table 2.2.3-1 are located on the Nuclear Island.	i) The seismic Category I equipment identified in Table 2.2.3-1 is located on the Nuclear Island.
	ii) Type tests, analyses, or a combination of type tests and analyses of seismic Category I equipment will be performed.	ii) A report exists and concludes that the seismic Category I equipment can withstand seismic design basis dynamic loads without loss of safety function. For the PXS containment recirculation and IRWST screens, a report exists and concludes that the screens can withstand seismic dynamic loads and also post-accident operating loads, including head loss and debris weights.
	iii) Inspection will be performed for the existence of a report verifying that the as-built equipment including anchorage is seismically bounded by the tested or analyzed conditions.	iii) A report exists and concludes that the as-built equipment including anchorage is seismically bounded by the tested or analyzed conditions. For the PXS containment recirculation and IRWST screens, a report exists and concludes that the as-installed screens including their anchorage are bounded by the seismic loads and also post-accident operating loads, including head loss and debris weights.
5.b) Each of the lines identified in Table 2.2.3-2 for which functional capability is required is designed to withstand combined normal and seismic design basis loads without a loss of its functional capability.	Inspection will be performed verifying that the as-built piping meets the requirements for functional capability.	A report exists and concludes that each of the as-built lines identified in Table 2.2.3-2 for which functional capability is required meets the requirements for functional capability.

Table 2.2.3-4 (cont.)
Inspections, Tests, Analyses, and Acceptance Criteria

Design Commitment	Inspections, Tests, Analyses	Acceptance Criteria
6. Each of the as-built lines identified in Table 2.2.3-2 as designed for LBB meets the LBB criteria, or an evaluation is performed of the protection from the dynamic effects of a rupture of the line.	Inspection will be performed for the existence of an LBB evaluation report or an evaluation report on the protection from dynamic effects of a pipe break. Tier 1 Material, Section 3.3, Nuclear Island Buildings, contains the design descriptions and inspections, tests, analyses, and acceptance criteria for protection from the dynamic effects of pipe rupture.	An LBB evaluation report exists and concludes that the LBB acceptance criteria are met by the as-built RCS piping and piping materials, or a pipe break evaluation report exists and concludes that protection from the dynamic effects of a line break is provided.
7.a) The Class 1E equipment identified in Table 2.2.3-1 as being qualified for a harsh environment can withstand the environmental conditions that would exist before, during, and following a design basis accident without loss of safety function for the time required to perform the safety function.	i) Type tests, analyses, or a combination of type tests and analyses will be performed on Class 1E equipment located in a harsh environment. ii) Inspection will be performed of the as-built Class 1E equipment and the associated wiring, cables, and terminations located in a harsh environment.	i) A report exists and concludes that the Class 1E equipment identified in Table 2.2.3-1 as being qualified for a harsh environment can withstand the environmental conditions that would exist before, during, and following a design basis accident without loss of safety function for the time required to perform the safety function. ii) A report exists and concludes that the as-built Class 1E equipment and the associated wiring, cables, and terminations identified in Table 2.2.3-1 as being qualified for a harsh environment are bounded by type tests, analyses, or a combination of type tests and analyses.
7.b) The Class 1E components identified in Table 2.2.3-1 are powered from their respective Class 1E division.	Testing will be performed by providing a simulated test signal in each Class 1E division.	A simulated test signal exists at the Class 1E equipment identified in Table 2.2.3-1 when the assigned Class 1E division is provided the test signal.
7.c) Separation is provided between PXS Class 1E divisions, and between Class 1E divisions and non-Class 1E cable.	See Tier 1 Material, Table 3.3-6, item 7.d.	See Tier 1 Material, Table 3.3-6, item 7.d.
8.a) The PXS provides containment isolation of the PXS lines penetrating the containment.	See Tier 1 Material, Table 2.2.1-3, items 1 and 7.	See Tier 1 Material, Table 2.2.1-3, items 1 and 7.

Table 2.2.3-4 (cont.)
Inspections, Tests, Analyses, and Acceptance Criteria

Design Commitment	Inspections, Tests, Analyses	Acceptance Criteria
8.b) The PXS provides core decay heat removal during design basis events.	A heat removal performance test and analysis of the PRHR HX will be performed to determine the heat transfer from the HX. For the test, the reactor coolant hot leg temperature will be initially at ≥ 540°F with the reactor coolant pumps stopped. The IRWST water level for the test will be above the top of the HX. The IRWST water temperature is not specified for the test. The test will continue until the hot leg temperature decreases below 420°F.	A report exists and concludes that the PRHR HX heat transfer rate with the design basis number of PRHR HX tubes plugged is: ≥ 1.78×10^8 Btu/hr with 520°F HL Temp and 80°F IRWST temperatures. ≥ 1.11×10^8 Btu/hr with 420°F HL Temp and 80°F IRWST temperatures.
	Inspection of the elevation of the PRHR HX will be conducted.	The elevation of the centerline of the HX's upper channel head is greater than the HL centerline by at least 26.3 ft.
8.c) The PXS provides RCS makeup, boration, and safety injection during design basis events.	i) A low-pressure injection test and analysis for each CMT, each accumulator, each IRWST injection line, and each containment recirculation line will be conducted. Each test is initiated by opening isolation valve(s) in the line being tested. Test fixtures may be used to simulate squib valves.	i) The injection line flow resistance from each source is as follows:
	CMTs: Each CMT will be initially filled with water. All valves in these lines will be open during the test.	CMTs: The calculated flow resistance between each CMT and the reactor vessel is ≥ 1.81×10^{-5} ft/gpm^2 and ≤ 2.25×10^{-5} ft/gpm^2.
	Accumulators: Each accumulator will be partially filled with water and pressurized with nitrogen. All valves in these lines will be open during the test. Sufficient flow will be provided to fully open the check valves.	Accumulators: The calculated flow resistance between each accumulator and the reactor vessel is ≥ 1.47×10^{-5} ft/gpm^2 and ≤ 1.83×10^{-5} ft/gpm^2.

Table 2.2.3-4 (cont.)
Inspections, Tests, Analyses, and Acceptance Criteria

Design Commitment	Inspections, Tests, Analyses	Acceptance Criteria
	IRWST Injection: The IRWST will be partially filled with water. All valves in these lines will be open during the test. Sufficient flow will be provided to fully open the check valves.	IRWST Injection: The calculated flow resistance for each IRWST injection line between the IRWST and the reactor vessel is: Line A: $\geq 5.53 \times 10^{-6}$ ft/gpm^2 and $\leq 9.20 \times 10^{-6}$ ft/gpm^2 and Line B: $\geq 6.21 \times 10^{-6}$ ft/gpm^2 and $\leq 1.03 \times 10^{-5}$ ft/gpm^2.
	Containment Recirculation: A temporary water supply will be connected to the recirculation lines. All valves in these lines will be open during the test. Sufficient flow will be provided to fully open the check valves.	Containment Recirculation: The calculated flow resistance for each containment recirculation line between the containment and the reactor vessel is: Line A: $\leq 1.11 \times 10^{-5}$ ft/gpm^2 and Line B: $\leq 1.04 \times 10^{-5}$ ft/gpm^2.
	ii) A low-pressure test and analysis will be conducted for each CMT to determine piping flow resistance from the cold leg to the CMT. The test will be performed by filling the CMT via the cold leg balance line by operating the normal residual heat removal pumps.	ii) The flow resistance from the cold leg to the CMT is $\leq 7.21 \times 10^{-6}$ ft/gpm^2.
	iii) Inspections of the routing of the following pipe lines will be conducted: – CMT inlet line, cold leg to high point – PRHR HX inlet line, hot leg to high point	iii) These lines have no downward sloping sections between the connection to the RCS and the high point of the line.

Table 2.2.3-4 (cont.)
Inspections, Tests, Analyses, and Acceptance Criteria

Design Commitment	Inspections, Tests, Analyses	Acceptance Criteria
	iv) Inspections of the elevation of the following pipe lines will be conducted: – IRWST injection lines; IRWST connection to DVI nozzles – Containment recirculation lines; containment to IRWST lines – CMT discharge lines to DVI connection – PRHR HX outlet line to SG connection	iv) The maximum elevation of the top inside surface of these lines is less than the elevation of: – IRWST bottom inside surface – IRWST bottom inside surface – CMT bottom inside surface – PRHR HX lower channel head top inside surface
	v) Inspections of the elevation of the following tanks will be conducted: – CMTs – IRWST	v) The elevation of the bottom inside tank surface is higher than the direct vessel injection nozzle centerline by the following: – CMTs ≥ 7.5 ft – IRWST ≥ 3.4 ft
	vi) Inspections of each of the following tanks will be conducted: – CMTs – Accumulators – IRWST	vi) The calculated volume of each of the following tanks is as follows: – CMTs ≥ 2487 ft^3 – Accumulators ≥ 2000 ft^3 – IRWST ≥ 73,900 ft^3 between the tank outlet connection and the tank overflow
	vii) Inspection of the as-built components will be conducted for plates located above the containment recirculation screens.	vii) Plates located above each containment recirculation screen are no more than 1 ft above the top of the screen and extend out at least 10 ft perpendicular to and at least 7 ft to the side of the screen surface.

Table 2.2.3-4 (cont.)
Inspections, Tests, Analyses, and Acceptance Criteria

Design Commitment	Inspections, Tests, Analyses	Acceptance Criteria
	viii) Inspections of the IRWST and containment recirculation screens will be conducted. The inspections will include measurements of the pockets and the number of pockets used in each screen. The pocket frontal face area is based on a width times a height. The width is the distance between pocket centerlines for pockets located beside each other. The height is the distance between pocket centerlines for pockets located above each other. The pocket screen area is the total area of perforated plate inside each pocket; this area will be determined by inspection of the screen manufacturing drawings.	viii) The screens utilize pockets with a frontal face area of ≥ 6.2 in^2 and a screen surface area ≥ 140 in^2 per pocket. IRWST Screens A and B each have a sufficient number of pockets to provide a frontal face area ≥ 20 ft^2, a screen surface area ≥ 500 ft^2, and a screen mesh size of ≤ 0.0625 inch. IRWST Screen C has a sufficient number of pockets to provide a frontal face area ≥ 40 ft^2, a screen surface area ≥ 1000 ft^2, and a screen mesh size ≤ 0.0625 inch. Each containment recirculation screen has a sufficient number of pockets to provide a frontal face area ≥ 105 ft^2, a screen surface area ≥ 2500 ft^2, and a screen mesh size ≤ 0.0625 inch. A debris curb exists in front of the containment recirculation screens which is ≥ 2 ft above the loop compartment floor. The bottoms of the IRWST screens are located ≥ 6 in above the bottom of the IRWST.
	ix) Inspections will be conducted of the insulation used inside the containment on the ASME Class 1 lines, reactor vessel, reactor coolant pumps, pressurizer and steam generators.	ix) The type of insulation used on these lines and equipment is a metal reflective type or a suitable equivalent. If an insulation other than metal reflective insulation is used, a report must exist and conclude that the insulation is a suitable equivalent.
	Inspections will be conducted of other insulation used inside the containment within the zone of influence (ZOI).	The type of insulation used on these lines and equipment is a metal reflective type or a suitable equivalent. If an insulation other than metal reflective insulation is used, a report must exist and conclude that the insulation is a suitable equivalent.

Table 2.2.3-4 (cont.)
Inspections, Tests, Analyses, and Acceptance Criteria

Design Commitment	Inspections, Tests, Analyses	Acceptance Criteria
	Inspection will be conducted of other insulation below the maximum flood level of a design basis loss-of-coolant accident (LOCA).	The type of insulation used on these lines is metal reflective insulation, jacketed fiberglass, or a suitable equivalent. If an insulation other than metal reflective or jacketed fiberglass insulation is used, a report must exist and conclude that the insulation is a suitable equivalent.
	x) Inspections will be conducted of the as-built nonsafety-related coatings or of plant records of the nonsafety-related coatings used inside containment on walls, floors, ceilings, and structural steel except in the CVS room. Inspections will be conducted of the as-built non-safety-related coatings or of plant records of the non-safety-related coatings used on components below the maximum flood level of a design basis LOCA or located above the maximum flood level and not inside cabinets or enclosures.	x) A report exists and concludes that the coatings used on these surfaces have a dry film density of $\geq$ 100 lb/ft^3. If a coating is used that has a lower dry film density, a report must exist and conclude that the coating will not transport. A report exists and concludes that inorganic zinc coatings used on these surfaces are Safety – Service Level I.
	Inspections will be conducted on caulking, tags, and signs used inside containment below the maximum flood level of a design basis LOCA or located above the maximum flood level and not inside cabinets or enclosures.	A report exists and concludes that tags and signs used in these locations are made of steel or another metal with a density $\geq$ 100 lb/ft^3. In addition, a report exists and concludes that caulking used in these locations or coatings used on these signs or tags have a dry film density of $\geq$ 100 lb/ft^3. If a material is used that has a lower density, a report must exist and conclude that there is insufficient water flow to transport lightweight caulking, signs, or tags.
	Inspections will be conducted of ventilation filters and fiber-producing fire barriers used inside containment within the ZOI or below the maximum flood level of a design basis LOCA.	A report exists and concludes that the ventilation filters and fire barriers in these locations have a density of $\geq$ 100 lb/ft^3.

Table 2.2.3-4 (cont.)
Inspections, Tests, Analyses, and Acceptance Criteria

Design Commitment	Inspections, Tests, Analyses	Acceptance Criteria
	xi) Inspection of the as-built CMT inlet diffuser will be conducted.	xi) The CMT inlet diffuser has a flow area ≥ 165 in^2.
	xii) Inspections will be conducted of the CMT level sensors (PSX-11A/B/D/C, - 12A/B/C/D, - 13A/B/C/D, - 14A/B/C/D) upper level tap lines.	xii) Each upper level tap line has a downward slope of ≥ 2.4 degrees from the centerline of the connection to the CMT to the centerline of the connection to the standpipe.
	xiii) Inspections will be conducted of the surfaces in the vicinity of the containment recirculation screens. The surfaces in the vicinity of the containment recirculation screens are the surfaces located above the bottom of the recirculation screens up to and including the bottom surface of the plate discussed in Table 2.2.3-4, item 8.c.vii, out at least 10 feet perpendicular to and at least 7 feet perpendicular to the side of the screen face.	xiii) These surfaces are stainless steel.
	xiv) Inspections will be conducted of the exposed surfaces of the source range, intermediate range, and power range detectors.	xiv) These surfaces are made of stainless steel or titanium.
8.d) The PXS provides pH adjustment of water flooding the containment following design basis accidents.	Inspections of the pH adjustment baskets will be conducted.	pH adjustment baskets exist, with a total calculated volume ≥ 560 ft^3. The pH baskets are located below plant elevation 107 ft, 2 in.
9.a) The PXS provides a function to cool the outside of the reactor vessel during a severe accident.	i) A flow test and analysis for each IRWST drain line to the containment will be conducted. The test is initiated by opening isolation valves in each line. Test fixtures may be used to simulate squib valves.	i) The calculated flow resistance for each IRWST drain line between the IRWST and the containment is ≤ 4.07×10^{-6} ft/gpm^2.
	ii) Inspections of the as-built reactor vessel insulation will be performed.	ii) The combined total flow area of the water inlets is not less than 6 ft^2. The combined total flow area of the steam outlet(s) is not less than 12 ft^2.

Table 2.2.3-4 (cont.)
Inspections, Tests, Analyses, and Acceptance Criteria

Design Commitment	Inspections, Tests, Analyses	Acceptance Criteria
		A report exists and concludes that the minimum flow area between the vessel insulation and reactor vessel for the flow path that vents steam is not less than 12 ft^2 considering the maximum deflection of the vessel insulation with a static pressure of 12.95 ft of water.
	iii) Inspections will be conducted of the flow path(s) from the loop compartments to the reactor vessel cavity.	iii) A flow path with a flow area not less than 6 ft^2 exists from the loop compartment to the reactor vessel cavity.
9.b) The accumulator discharge check valves (PXS-PL-V028A/B and V029A/B) are of a different check valve type than the CMT discharge check valves (PXS-PL-V016A/B and V017A/B).	An inspection of the accumulator and CMT discharge check valves is performed.	The accumulator discharge check valves are of a different check valve type than the CMT discharge check valves.
9.c) The equipment listed in Table 2.2.3-6 has sufficient thermal lag to withstand the effects of identified hydrogen burns associated with severe accidents.	Type tests, analyses, or a combination of type tests and analyses will be performed to determine the thermal lag of this equipment.	A report exists and concludes that the thermal lag of this equipment is greater than the value required.
10. Safety-related displays of the parameters identified in Table 2.2.3-1 can be retrieved in the MCR.	Inspection will be performed for the retrievability of the safety-related displays in the MCR.	Safety-related displays identified in Table 2.2.3-1 can be retrieved in the MCR.
11.a) Controls exist in the MCR to cause the remotely operated valves identified in Table 2.2.3-1 to perform their active function(s).	i) Testing will be performed on the squib valves identified in Table 2.2.3-1 using controls in the MCR, without stroking the valve. ii) Stroke testing will be performed on remotely operated valves other than squib valves identified in Table 2.2.3-1 using the controls in the MCR.	i) Controls in the MCR operate to cause a signal at the squib valve electrical leads that is capable of actuating the squib valve. ii) Controls in the MCR operate to cause remotely operated valves other than squib valves to perform their active functions.

Table 2.2.3-4 (cont.)
Inspections, Tests, Analyses, and Acceptance Criteria

Design Commitment	Inspections, Tests, Analyses	Acceptance Criteria
11.b) The valves identified in Table 2.2.3-1 as having PMS control perform their active function after receiving a signal from the PMS.	i) Testing will be performed on the squib valves identified in Table 2.2.3-1 using real or simulated signals into the PMS without stroking the valve. ii) Testing will be performed on the remotely operated valves other than squib valves identified in Table 2.2.3-1 using real or simulated signals into the PMS.	i) Squib valves receive an electrical signal at the valve electrical leads that is capable of actuating the valve after a signal is input to the PMS. ii) Remotely operated valves other than squib valves perform the active function identified in the table after a signal is input to the PMS.
	iii) Testing will be performed to demonstrate that remotely operated PXS isolation valves PXS-V014A/B, V015A/B, V108A/B open within the required response times.	iii) These valves open within 20 seconds after receipt of an actuation signal.
11.c) The valves identified in Table 2.2.3-1 as having DAS control perform their active function after receiving a signal from the DAS.	i) Testing will be performed on the squib valves identified in Table 2.2.3-1 using real or simulated signals into the DAS without stroking the valve. ii) Testing will be performed on the remotely operated valves other than squib valves identified in Table 2.2.3-1 using real or simulated signals into the DAS.	i) Squib valves receive an electrical signal at the valve electrical leads that is capable of actuating the valve after a signal is input to the DAS. ii) Remotely operated valves other than squib valves perform the active function identified in Table 2.2.3-1 after a signal is input to the DAS.

Table 2.2.3-4 (cont.)
Inspections, Tests, Analyses, and Acceptance Criteria

Design Commitment	Inspections, Tests, Analyses	Acceptance Criteria
12.a) The squib valves and check valves identified in Table 2.2.3-1 perform an active safety-related function to change position as indicated in the table.	i) Tests or type tests of squib valves will be performed that demonstrate the capability of the valve to operate under its design condition.	i) A test report exists and concludes that each squib valve changes position as indicated in Table 2.2.3-1 under design conditions.
	ii) Inspection will be performed for the existence of a report verifying that the as-built squib valves are bounded by the tests or type tests.	ii) A report exists and concludes that the as-built squib valves are bounded by the tests or type tests.
	iii) Deleted	iii) Deleted
	iv) Exercise testing of the check valves with active safety functions identified in Table 2.2.3-1 will be performed under preoperational test pressure, temperature, and fluid flow conditions.	iv) Each check valve changes position as indicated in Table 2.2.3-1
12.b) After loss of motive power, the remotely operated valves identified in Table 2.2.3-1 assume the indicated loss of motive power position.	Testing of the remotely operated valves will be performed under the conditions of loss of motive power.	After loss of motive power, each remotely operated valve identified in Table 2.2.3-1 assumes the indicated loss of motive power position.
13. Displays of the parameters identified in Table 2.2.3-3 can be retrieved in the MCR.	Inspection will be performed for retrievability of the displays identified in Table 2.2.3-3 in the MCR.	Displays identified in Table 2.2.3-3 can be retrieved in the MCR.

Table 2.2.3-5		
Component Name	**Tag No.**	**Component Location**
Passive Residual Heat Removal Heat Exchanger (PRHR HX)	PXS-ME-01	Containment Building
Accumulator Tank A	PXS-MT-01A	Containment Building
Accumulator Tank B	PXS-MT-01B	Containment Building
Core Makeup Tank (CMT) A	PXS-MT-02A	Containment Building
CMT B	PXS-MT-02B	Containment Building
IRWST	PXS-MT-03	Containment Building
IRWST Screen A	PXS-MY-Y01A	Containment Building
IRWST Screen B	PXS-MY-Y01B	Containment Building
IRWST Screen C	PXS-MY-Y01C	Containment Building
Containment Recirculation Screen A	PXS-MY-Y02A	Containment Building
Containment Recirculation Screen B	PXS-MY-Y02B	Containment Building
pH Adjustment Basket 3A	PXS-MY-Y03A	Containment Building
pH Adjustment Basket 3B	PXS-MY-Y03B	Containment Building
pH Adjustment Basket 4A	PXS-MY-Y04A	Containment Building
pH Adjustment Basket 4B	PXS-MY-Y04B	Containment Building

Table 2.2.3-6		
Equipment	**Tag No.**	**Function**
Containment Air Sample Containment Isolation Valve IRC	PSS-PL-V001A/B, 010A/B	Transfer open
Containment Pressure Sensors	PCS-012, 013, 014	Sense pressure
RCS Wide Range Pressure Sensors	RCS-191A, B, C, D	Sense pressure
SG1 Wide Range Level Sensors	SGS-011, 012, 015, 016	Sense level
SG2 Wide Range Level Sensors	SGS-013, 014, 017, 018	Sense level
Hydrogen Monitors	VLS-001, 002, 003	Sense concentration
Hydrogen Igniters	VLS-EH-01 through 64	Ignite hydrogen
Containment Electrical Penetrations	P01, P02, P03, P06, P09, P10, P11, P12, P13, P14, P15, P16, P18, P21, P22, P23, P24, P25, P26, P27, P28, P29, P30, P31, P32	Maintain containment boundary

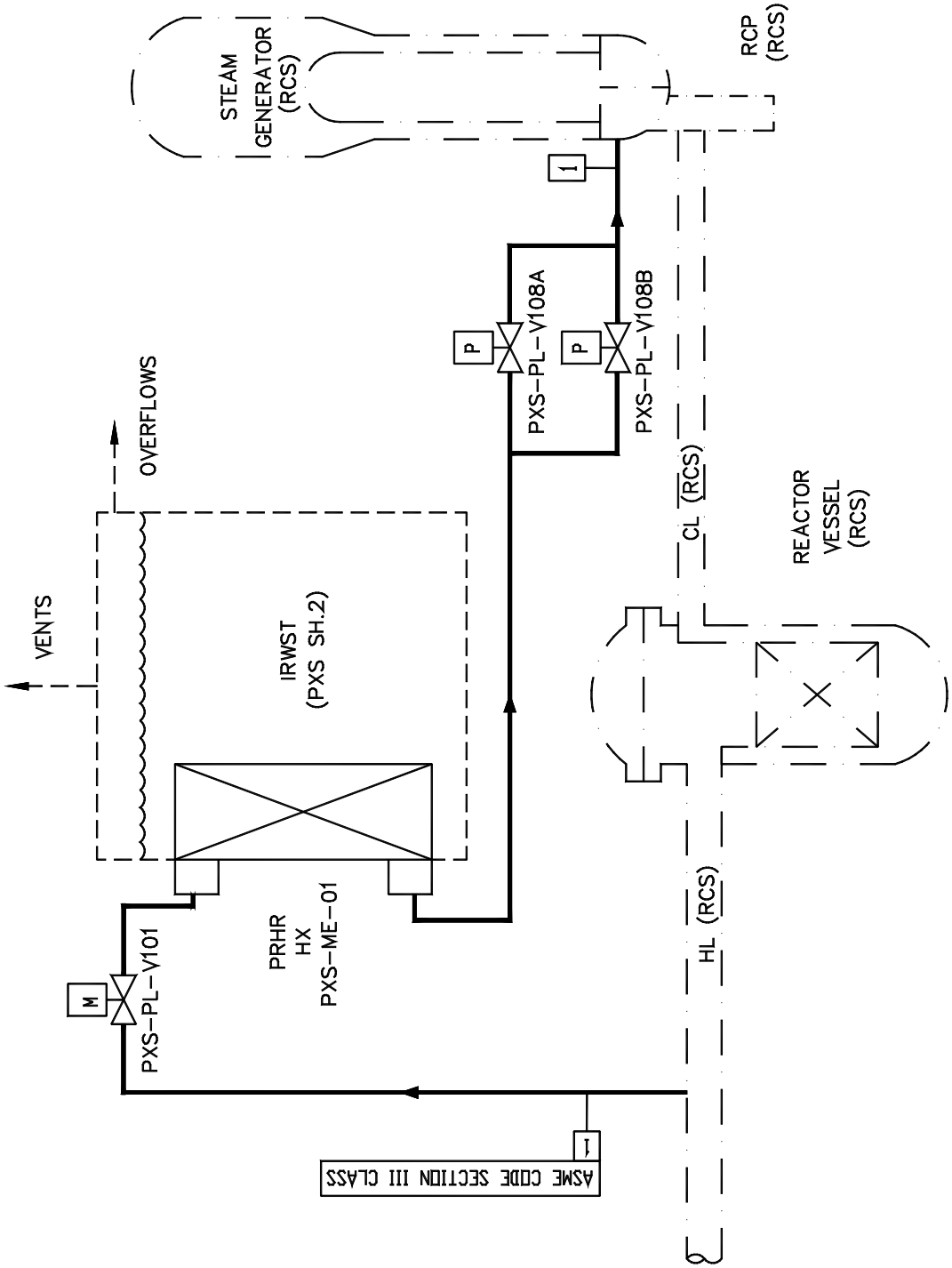

Figure 2.2.3-1 (Sheet 1 of 2)
Passive Core Cooling System

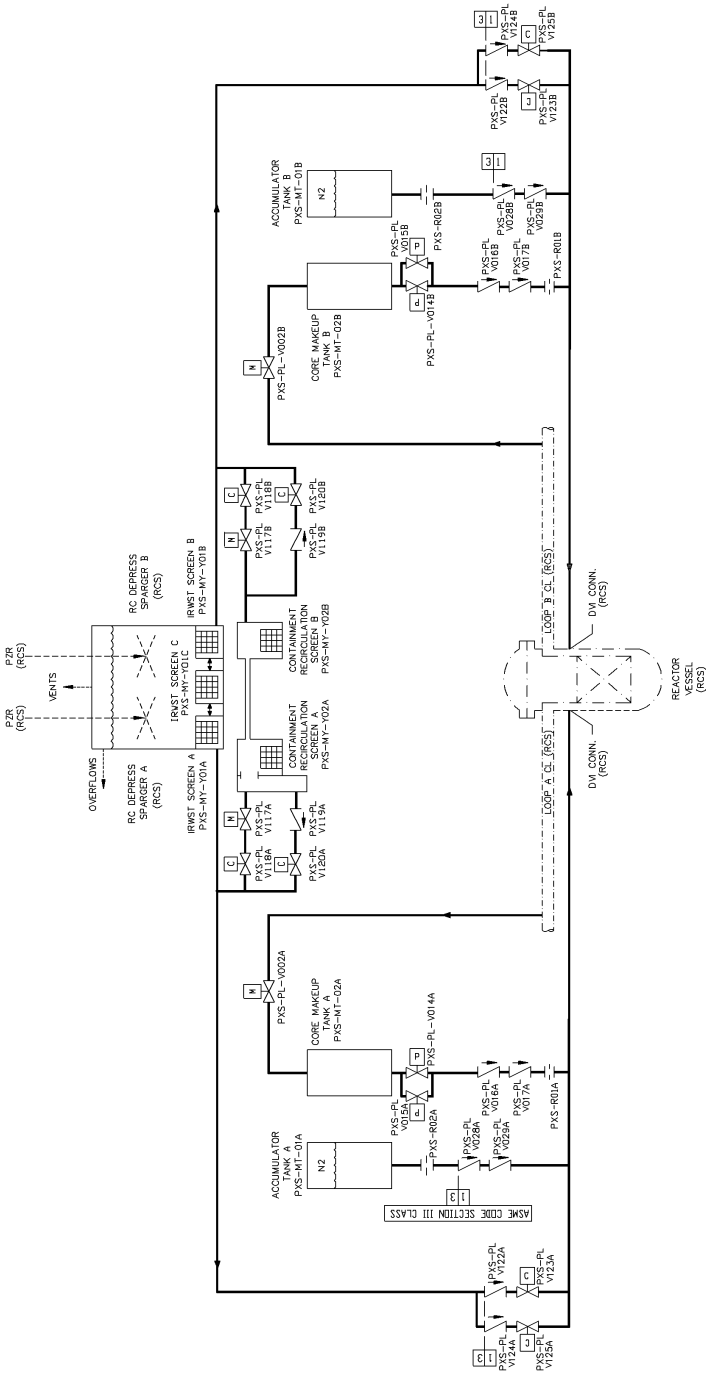

Figure 2.2.3-1 (Sheet 2 of 2)
Passive Core Cooling System

2.2.4 Steam Generator System

Design Description

The steam generator system (SGS) and portions of the main and startup feedwater system (FWS) transport and control feedwater from the condensate system to the steam generators during normal operation. The SGS and portions of the main steam system (MSS) and turbine system (MTS) transport and control steam from the steam generators to the turbine generator during normal operations. These systems also isolate the steam generators from the turbine generator and the condensate system during design basis accidents.

The SGS is as shown in Figure 2.2.4-1, sheets 1 and 2, and portions of the FWS, MSS, and MTS are as shown in Figure 2.2.4-1, sheet 3, and the locations of the components in these systems is as shown in Table 2.2.4-5.

1. The functional arrangement of the SGS and portions of the FWS, MSS, and MTS are as described in the Design Description of this Section 2.2.4.

2. a) The components identified in Table 2.2.4-1 as ASME Code Section III are designed and constructed in accordance with ASME Code Section III requirements.

   b) The piping identified in Table 2.2.4-2 as ASME Code Section III is designed and constructed in accordance with ASME Code Section III requirements.

3. a) Pressure boundary welds in components identified in Table 2.2.4-1 as ASME Code Section III meet ASME Code Section III requirements.

   b) Pressure boundary welds in piping identified in Table 2.2.4-2 as ASME Code Section III meet ASME Code Section III requirements.

4. a) The components identified in Table 2.2.4-1 as ASME Code Section III retain their pressure boundary integrity at their design pressure.

   b) The piping identified in Table 2.2.4-2 as ASME Code Section III retains its pressure boundary integrity at its design pressure.

5. a) The seismic Category I equipment identified in Table 2.2.4-1 can withstand seismic design basis loads without loss of safety function.

   b) Each of the lines identified in Table 2.2.4-2 for which functional capability is required is designed to withstand combined normal and seismic design basis loads without a loss of its functional capability.

6. Each of the as-built lines identified in Table 2.2.4-2 as designed for leak before break (LBB) meets the LBB criteria, or an evaluation is performed of the protection from the dynamic effects of a rupture of the line.

7. a) The Class 1E equipment identified in Table 2.2.4-1 as being qualified for a harsh environment can withstand the environmental conditions that would exist before, during, and following a design basis accident without loss of safety function for the time required to perform the safety function.

   b) The Class 1E components identified in Table 2.2.4-1 are powered from their respective Class 1E division.

   c) Separation is provided between SGS Class 1E divisions, and between Class 1E divisions and non-Class 1E cable.

8. The SGS provides the following safety-related functions:

   a) The SGS provides a heat sink for the reactor coolant system (RCS) and provides overpressure protection.

   b) During design basis events, the SGS limits steam generator blowdown and feedwater flow to the steam generator.

   c) The SGS preserves containment integrity by isolation of the SGS lines penetrating the containment. The inside containment isolation function (isolating the RCS and containment atmosphere from the environment) is provided by the steam generator, tubes, and SGS lines inside containment while isolation outside containment is provided by manual and automatic valves.

9. The SGS provides the following nonsafety-related functions:

   a) Components within the main steam system, main and startup feedwater system, and the main turbine system identified in Table 2.2.4-3 provide backup isolation of the SGS to limit steam generator blowdown and feedwater flow to the steam generator.

   b) During shutdown operations, the SGS removes decay heat by delivery of startup feedwater to the steam generator and venting of steam from the steam generators to the atmosphere.

10. Safety-related displays identified in Table 2.2.4-1 can be retrieved in the main control room (MCR).

11. a) Controls exist in the MCR to cause the remotely operated valves identified in Table 2.2.4-1 to perform active functions.

    b) The valves identified in Table 2.2.4-1 as having PMS control perform an active safety function after receiving a signal from PMS.

12. a) The motor-operated valves identified in Table 2.2.4-1 perform an active safety-related function to change position as indicated in the table.

    b) After loss of motive power, the remotely operated valves identified in Table 2.2.4-1 assume the indicated loss of motive power position.

Inspections, Tests, Analyses, and Acceptance Criteria

Table 2.2.4-4 specifies the inspections, tests, analyses, and associated acceptance criteria for the SGS.

Table 2.2.4-1

Equipment Name	Tag No.	ASME Code Section III	Seismic Cat. I	Remotely Operated Valve	Class 1E/ Qual. for Harsh Envir.	Safety-Related Display	Control PMS	Active Function	Loss of Motive Power Position
Main Steam Safety Valve SG01	SGS-PL-V030A	Yes	Yes	-	-/-	No	-	Transfer Open/ Transfer Closed	-
Main Steam Safety Valve SG02	SGS-PL-V030B	Yes	Yes	-	-/-	No	-	Transfer Open/ Transfer Closed	-
Main Steam Safety Valve SG01	SGS-PL-V031A	Yes	Yes	-	-/-	No	-	Transfer Open/ Transfer Closed	-
Main Steam Safety Valve SG02	SGS-PL-V031B	Yes	Yes	-	-/-	No	-	Transfer Open/ Transfer Closed	-
Main Steam Safety Valve SG01	SGS-PL-V032A	Yes	Yes	-	-/-	No	-	Transfer Open/ Transfer Closed	-
Main Steam Safety Valve SG02	SGS-PL-V032B	Yes	Yes	-	-/-	No	-	Transfer Open/ Transfer Closed	-

Note: Dash (-) indicates not applicable.

Table 2.2.4-1 (cont.)

Equipment Name	Tag No.	ASME Code Section III	Seismic Cat. I	Remotely Operated Valve	Class 1E/ Qual. for Harsh Envir.	Safety-Related Display	Control PMS	Active Function	Loss of Motive Power Position
Main Steam Safety Valve SG01	SGS-PL-V033A	Yes	Yes	-	-/-	No	-	Transfer Open/ Transfer Closed	-
Main Steam Safety Valve SG02	SGS-PL–V033B	Yes	Yes	-	-/-	No	-	Transfer Open/ Transfer Closed	-
Main Steam Safety Valve SG01	SGS-PL–V034A	Yes	Yes	-	-/-	No	-	Transfer Open/ Transfer Closed	-
Main Steam Safety Valve SG02	SGS-PL–V034B	Yes	Yes	-	-/-	No	-	Transfer Open/ Transfer Closed	-
Main Steam Safety Valve SG01	SGS-PL–V035A	Yes	Yes	-	-/-	No	-	Transfer Open/ Transfer Closed	-
Main Steam Safety Valve SG02	SGS-PL–V035B	Yes	Yes	-	-/-	No	-	Transfer Open/ Transfer Closed	-

Note: Dash (-) indicates not applicable.

Table 2.2.4-1 (cont.)

Equipment Name	Tag No.	ASME Code Section III	Seismic Cat. I	Remotely Operated Valve	Class 1E/ Qual. for Harsh Envir.	Safety-Related Display	Control PMS	Active Function	Loss of Motive Power Position
Power-operated Relief Valve Block Motor-operated Valve Steam Generator 01	SGS-PL-V027A	Yes	Yes	Yes	Yes/Yes	Yes (Valve Position)	Yes	Transfer Closed	As Is
Power-operated Relief Valve Block Motor-operated Valve Steam Generator 02	SGS-PL-V027B	Yes	Yes	Yes	Yes/Yes	Yes (Valve Position)	Yes	Transfer Closed	As Is
Steam Line Condensate Drain Isolation Valve	SGS-PL-V036A	Yes	Yes	Yes	Yes/Yes	Yes (Valve Position)	Yes	Transfer Closed	Closed
Steam Line Condensate Drain Isolation Valve	SGS-PL-V036B	Yes	Yes	Yes	Yes/Yes	Yes (Valve Position)	Yes	Transfer Closed	Closed
Main Steam Line Isolation Valve	SGS-PL-V040A	Yes	Yes	Yes	Yes/Yes	Yes (Valve Position)	Yes	Transfer Closed	As Is
Main Steam Line Isolation Valve	SGS-PL-V040B	Yes	Yes	Yes	Yes/Yes	Yes (Valve Position)	Yes	Transfer Closed	As Is
Steam Line Condensate Drain Control Valve	SGS-PL-V086A	Yes	Yes	Yes	Yes/Yes	No	Yes	Transfer Closed	Closed
Steam Line Condensate Drain Control Valve	SGS-PL-V086B	Yes	Yes	Yes	Yes/Yes	No	Yes	Transfer Closed	Closed

Table 2.2.4-1 (cont.)

Equipment Name	Tag No.	ASME Code Section III	Seismic Cat. I	Remotely Operated Valve	Class 1E/ Qual. for Harsh Envir.	Safety-Related Display	Control PMS	Active Function	Loss of Motive Power Position
Main Feedwater Isolation Valve	SGS-PL-V057A	Yes	Yes	Yes	Yes/Yes	Yes (Valve Position)	Yes	Transfer Closed	As Is
Main Feedwater Isolation Valve	SGS-PL-V057B	Yes	Yes	Yes	Yes/Yes	Yes (Valve Position)	Yes	Transfer Closed	As Is
Startup Feedwater Isolation Motor-operated Valve	SGS-PL-V067A	Yes	Yes	Yes	Yes/Yes	Yes (Valve Position)	Yes	Transfer Closed	As Is
Startup Feedwater Isolation Motor-operated Valve	SGS-PL-V067B	Yes	Yes	Yes	Yes/Yes	Yes (Valve Position)	Yes	Transfer Closed	As Is
Steam Generator Blowdown Isolation Valve	SGS-PL-V074A	Yes	Yes	Yes	Yes/Yes	Yes (Valve Position)	Yes	Transfer Closed	Closed
Steam Generator Blowdown Isolation Valve	SGS-PL-V074B	Yes	Yes	Yes	Yes/Yes	Yes (Valve Position)	Yes	Transfer Closed	Closed
Steam Generator Blowdown Isolation Valve	SGS-PL-V075A	Yes	Yes	Yes	Yes/Yes	No	Yes	Transfer Closed	Closed
Steam Generator Blowdown Isolation Valve	SGS-PL-V075B	Yes	Yes	Yes	Yes/Yes	No	Yes	Transfer Closed	Closed

Table 2.2.4-1 (cont.)

Equipment Name	Tag No.	ASME Code Section III	Seismic Cat. I	Remotely Operated Valve	Class 1E/ Qual. for Harsh Envir.	Safety-Related Display	Control PMS	Active Function	Loss of Motive Power Position
Power-operated Relief Valve	SGS-PL-V233A	Yes	Yes	Yes	Yes/Yes	Yes (Valve Position)	Yes	Transfer Closed	Closed
Power-operated Relief Valve	SGS-PL-V233B	Yes	Yes	Yes	Yes/Yes	Yes (Valve Position)	Yes	Transfer Closed	Closed
Main Steam Isolation Valve Bypass Isolation	SGS-PL-V240A	Yes	Yes	Yes	Yes/Yes	Yes (Valve Position)	Yes	Transfer Closed	Closed
Main Steam Isolation Valve Bypass Isolation	SGS-PL-V240B	Yes	Yes	Yes	Yes/Yes	Yes (Valve Position)	Yes	Transfer Closed	Closed
Main Feedwater Control Valve	SGS-PL-V250A	Yes	Yes	Yes	Yes/Yes	Yes (Valve Position)	Yes	Transfer Closed	Closed
Main Feedwater Control Valve	SGS-PL-V250B	Yes	Yes	Yes	Yes/Yes	Yes (Valve Position)	Yes	Transfer Closed	Closed
Startup Feedwater Control Valve	SGS-PL-V255A	Yes	Yes	Yes	Yes/Yes	Yes (Valve Position)	Yes	Transfer Closed	Closed
Startup Feedwater Control Valve	SGS-PL-V255B	Yes	Yes	Yes	Yes/Yes	Yes (Valve Position)	Yes	Transfer Closed	Closed

Table 2.2.4-1 (cont.)

Equipment Name	Tag No.	ASME Code Section III	Seismic Cat. I	Remotely Operated Valve	Class 1E/ Qual. for Harsh Envir.	Safety-Related Display	Control PMS	Active Function	Loss of Motive Power Position
Steam Generator 1 Narrow Range Level Sensor	SGS-001	No	Yes	-	Yes/Yes	Yes	-	-	-
Steam Generator 1 Narrow Range Level Sensor	SGS–002	No	Yes	-	Yes/Yes	Yes	-	-	-
Steam Generator 1 Narrow Range Level Sensor	SGS–003	No	Yes	-	Yes/Yes	Yes	-	-	-
Steam Generator 1 Narrow Range Level Sensor	SGS–004	No	Yes	-	Yes/Yes	Yes	-	-	-
Steam Generator 2 Narrow Range Level Sensor	SGS–005	No	Yes	-	Yes/Yes	Yes	-	-	-
Steam Generator 2 Narrow Range Level Sensor	SGS–006	No	Yes	-	Yes/Yes	Yes	-	-	-
Steam Generator 2 Narrow Range Level Sensor	SGS–007	No	Yes	-	Yes/Yes	Yes	-	-	-

Note: Dash (-) indicates not applicable.

Table 2.2.4-1 (cont.)

Equipment Name	Tag No.	ASME Code Section III	Seismic Cat. I	Remotely Operated Valve	Class 1E/ Qual. for Harsh Envir.	Safety-Related Display	Control PMS	Active Function	Loss of Motive Power Position
Steam Generator 2 Narrow Range Level Sensor	SGS-008	No	Yes	-	Yes/Yes	Yes	-	-	-
Steam Generator 1 Wide Range Level Sensor	SGS-011	No	Yes	-	Yes/Yes	Yes	-	-	-
Steam Generator 1 Wide Range Level Sensor	SGS-012	No	Yes	-	Yes/Yes	Yes	-	-	-
Steam Generator 2 Wide Range Level Sensor	SGS-013	No	Yes	-	Yes/Yes	Yes	-	-	-
Steam Generator 2 Wide Range Level Sensor	SGS-014	No	Yes	-	Yes/Yes	Yes	-	-	-
Steam Generator 1 Wide Range Level Sensor	SGS-015	No	Yes	-	Yes/Yes	Yes	-	-	-
Steam Generator 1 Wide Range Level Sensor	SGS-016	No	Yes	-	Yes/Yes	Yes	-	-	-
Steam Generator 2 Wide Range Level Sensor	SGS-017	No	Yes	-	Yes/Yes	Yes	-	-	-

Note: Dash (-) indicates not applicable.

Table 2.2.4-1 (cont.)

Equipment Name	Tag No.	ASME Code Section III	Seismic Cat. I	Remotely Operated Valve	Class 1E/ Qual. for Harsh Envir.	Safety-Related Display	Control PMS	Active Function	Loss of Motive Power Position
Steam Generator 2 Wide Range Level Sensor	SGS-018	No	Yes	-	Yes/Yes	Yes	-	-	-
Main Steam Line Steam Generator 1 Pressure Sensor	SGS-030	No	Yes	-	Yes/Yes	Yes	-	-	-
Main Steam Line Steam Generator 1 Pressure Sensor	SGS-031	No	Yes	-	Yes/No	Yes	-	-	-
Main Steam Line Steam Generator 1 Pressure Sensor	SGS-032	No	Yes	-	Yes/Yes	Yes	-	-	-
Main Steam Line Steam Generator 1 Pressure Sensor	SGS-033	No	Yes	-	Yes/No	Yes	-	-	-
Main Steam Line Steam Generator 2 Pressure Sensor	SGS-034	No	Yes	-	Yes/Yes	Yes	-	-	-
Main Steam Line Steam Generator 2 Pressure Sensor	SGS-035	No	Yes	-	Yes/No	Yes	-	-	-
Main Steam Line Steam Generator 2 Pressure Sensor	SGS-036	No	Yes	-	Yes/Yes	Yes	-	-	-

Note: Dash (-) indicates not applicable.

Table 2.2.4-1 (cont.)

Equipment Name	Tag No.	ASME Code Section III	Seismic Cat. I	Remotely Operated Valve	Class 1E/ Qual. for Harsh Envir.	Safety-Related Display	Control PMS	Active Function	Loss of Motive Power Position
Main Steam Line Steam Generator 2 Pressure Sensor	SGS-037	No	Yes	-	Yes/No	Yes	-	-	-
Steam Generator 1 Startup Feedwater Flow Sensor	SGS-55A	No	Yes	-	Yes/No	Yes	-	-	-
Steam Generator 1 Startup Feedwater Flow Sensor	SGS-55B	No	Yes	-	Yes/No	Yes	-	-	-
Steam Generator 2 Startup Feedwater Flow Sensor	SGS-56A	No	Yes	-	Yes/No	Yes	-	-	-
Steam Generator 2 Startup Feedwater Flow Sensor	SGS-56B	No	Yes	-	Yes/No	Yes	-	-	-

Note: Dash (-) indicates not applicable.

Table 2.2.4-2

Line Name	Line Number	ASME Code Section III	Leak Before Break	Functional Capability Required
Main Feedwater Line	SGS-PL-L002A, L002B	Yes	No	No
Main Feedwater Line	SGS-PL-L003A, L003B	Yes	No	No
Startup Feedwater Line	SGS-PL-L004A, L004B	Yes	No	No
Startup Feedwater Line	SGS-PL-L005A, L005B	Yes	No	No
Main Steam Line (within containment)	SGS-PL-L006A, L006B	Yes	Yes	Yes
Main Steam Line (outside of containment)	SGS-PL-L006A, L006B	Yes	No	Yes
Main Steam Line	SGS-PL-L007A, L007B	Yes	No	No
Safety Valve Inlet Line	SGS-PL-L015A, L015B, L015C, L015D, L015E, L015F, L015G, L015H, L015J, L015K, L015L, L015M	Yes	No	Yes
Safety Valve Discharge Line	SGS-PL-L018A, L018B, L018C, L018D, L018E, L018F, L018G, L018H, L018J, L018K, L018L, L018M	Yes	No	Yes
Power-operated Relief Block Valve Inlet Line	SGS-PL-L024A, L024B	Yes	No	No
Power-operated Relief Valve Inlet Line	SGS-PL-L014A, L014B	Yes	No	No

Note: Dash (-) indicates not applicable.

Table 2.2.4-2

Line Name	Line Number	ASME Code Section III	Leak Before Break	Functional Capability Required
Main Steam Isolation Valve Bypass Inlet Line	SGS-PL-L022A, L022B	Yes	No	No
Main Steam Isolation Valve Bypass Outlet Line	SGS-PL-L023A, L023B	Yes	No	No
Main Steam Condensate Drain Line	SGS-PL-L021A, L021B	Yes	No	No
Steam Generator Blowdown Line	SGS-PL-L009A, L009B	Yes	No	No
Steam Generator Blowdown Line	SGS-PL-L027A, L027B	Yes	No	No
Steam Generator Blowdown Line	SGS-PL-L010A, L010B	Yes	No	No

Note: Dash (-) indicates not applicable.

Table 2.2.4-3		
Equipment Name	**Tag No.**	**Control Function**
Turbine Stop Valve	MTS-PL-V001A	Close
Turbine Stop Valve	MTS-PL-V001B	Close
Turbine Control Valve	MTS-PL-V002A	Close
Turbine Control Valve	MTS-PL-V002B	Close
Turbine Stop Valve	MTS-PL-V003A	Close
Turbine Stop Valve	MTS-PL-V003B	Close
Turbine Control Valve	MTS-PL-V004A	Close
Turbine Control Valve	MTS-PL-V004B	Close
Turbine Bypass Control Valve	MSS-PL-V001	Close
Turbine Bypass Control Valve	MSS-PL-V002	Close
Turbine Bypass Control Valve	MSS-PL-V003	Close
Turbine Bypass Control Valve	MSS-PL-V004	Close
Turbine Bypass Control Valve	MSS-PL-V005	Close
Turbine Bypass Control Valve	MSS-PL-V006	Close
Moisture Separator Reheater 2nd Stage Steam Isolation Valve	MSS-PL-V015A	Close
Moisture Separator Reheater 2nd Stage Steam Isolation Valve	MSS-PL-V015B	Close
Main Feedwater Pump	FWS-MP-02A	Trip
Main Feedwater Pump	FWS-MP-02B	Trip
Main Feedwater Pump	FWS-MP-02C	Trip
Startup Feedwater Pump	FWS-MP-03A	Trip
Startup Feedwater Pump	FWS-MP-03B	Trip

Table 2.2.4-4
Inspections, Tests, Analyses, and Acceptance Criteria

Design Commitment	Inspections, Tests, Analyses	Acceptance Criteria
1. The functional arrangement of the SGS and portions of the FWS, MSS, and MTS are as described in the Design Description of this Section 2.2.4.	Inspection of the as-built system will be performed.	The as-built SGS and portions of the FWS, MSS, and MTS conform with the functional arrangement as defined in the Design Description of this Section 2.2.4.
2.a) The components identified in Table 2.2.4-1 as ASME Code Section III are designed and constructed in accordance with ASME Code Section III requirements.	Inspection will be conducted of the as-built components as documented in the ASME design reports.	The ASME Code Section III design reports exist for the as-built components identified in Table 2.2.4-1 as ASME Code Section III.
2.b) The piping identified in Table 2.2.4-2 as ASME Code Section III is designed and constructed in accordance with ASME Code Section III requirements.	Inspection will be conducted of the as-built piping as documented in the ASME design reports.	The ASME Code Section III design reports exist for the as-built piping identified in Table 2.2.4-2 as ASME Code Section III.
3.a) Pressure boundary welds in components identified in Table 2.2.4-1 as ASME Code Section III meet ASME Code Section III requirements.	Inspection of the as-built pressure boundary welds will be performed in accordance with the ASME Code Section III.	A report exists and concludes that the ASME Code Section III requirements are met for non-destructive examination of pressure boundary welds.
3.b) Pressure boundary welds in piping identified in Table 2.2.4-2 as ASME Code Section III meet ASME Code Section III requirements.	Inspection of the as-built pressure boundary welds will be performed in accordance with the ASME Code Section III.	A report exists and concludes that the ASME Code Section III requirements are met for non-destructive examination of pressure boundary welds.

Table 2.2.4-4 (cont.)
Inspections, Tests, Analyses, and Acceptance Criteria

Design Commitment	Inspections, Tests, Analyses	Acceptance Criteria
4.a) The components identified in Table 2.2.4-1 as ASME Code Section III retain their pressure boundary integrity at their design pressure.	A hydrostatic test will be performed on the components required by the ASME Code Section III to be hydrostatically tested.	A report exists and concludes that the results of the hydrostatic test of the components identified in Table 2.2.4-1 as ASME Code Section III conform with the requirements of the ASME Code Section III.
4.b) The piping identified in Table 2.2.4-2 as ASME Code Section III retains its pressure boundary integrity at its design pressure.	A hydrostatic test will be performed on the piping required by the ASME Code Section III to be hydrostatically tested.	A report exists and concludes that the results of the hydrostatic test of the piping identified in Table 2.2.4-2 as ASME Code Section III conform with the requirements of the ASME Code Section III.
5.a) The seismic Category I equipment identified in Table 2.2.4-1 can withstand seismic design basis loads without loss of safety function.	i) Inspection will be performed to verify that the seismic Category I equipment identified in Table 2.2.4-1 is located on the Nuclear Island. ii) Type tests, analyses, or a combination of type tests and analyses of seismic Category I equipment will be performed. iii) Inspection will be performed for the existence of a report verifying that the as-built equipment including anchorage is seismically bounded by the tested or analyzed conditions.	i) The seismic Category I equipment identified in Table 2.2.4-1 is located on the Nuclear Island. ii) A report exists and concludes that the seismic Category I equipment can withstand seismic design basis loads without loss of safety function. iii) A report exists and concludes that the as-built equipment including anchorage is seismically bounded by the tested or analyzed conditions.
5.b) Each of the lines identified in Table 2.2.4-2 for which functional capability is required is designed to withstand combined normal and seismic design basis loads without a loss of its functional capability.	Inspection will be performed for the existence of a report concluding that the as-built piping meets the requirements for functional capability.	A report exists and concludes that each of the as-built lines identified in Table 2.2.4-2 for which functional capability is required meets the requirements for functional capability.

Table 2.2.4-4 (cont.)
Inspections, Tests, Analyses, and Acceptance Criteria

Design Commitment	Inspections, Tests, Analyses	Acceptance Criteria
6. Each of the as-built lines identified in Table 2.2.4-2 as designed for LBB meets the LBB criteria, or an evaluation is performed of the protection from the dynamic effects of a rupture of the line.	Inspection will be performed for the existence of an LBB evaluation report or an evaluation report on the protection from effects of a pipe break. Tier 1 Material, Section 3.3, Nuclear Island Buildings, contains the design descriptions and inspections, tests, analyses, and acceptance criteria for protection from the dynamic effects of pipe rupture.	An LBB evaluation report exists and concludes that the LBB acceptance criteria are met by the as-built RCS piping and piping materials, or a pipe break evaluation report exists and concludes that protection from the dynamic effects of a line break is provided.
7.a) The Class 1E equipment identified in Table 2.2.4-1 as being qualified for a harsh environment can withstand the environmental conditions that would exist before, during, and following a design basis accident without loss of safety function for the time required to perform the safety function.	i) Type tests, analyses, or a combination of type tests and analyses will be performed on Class 1E equipment located in a harsh environment.	i) A report exists and concludes that the Class 1E equipment identified in Table 2.2.4-1 as being qualified for a harsh environment can withstand the environmental conditions that would exist before, during, and following a design basis accident without loss of safety function for the time required to perform the safety function.
	ii) Inspection will be performed of the as-built Class 1E equipment and the associated wiring, cables, and terminations located in a harsh environment.	ii) A report exists and concludes that the as-built Class 1E equipment and the associated wiring, cables, and terminations identified in Table 2.2.4-1 as being qualified for a harsh environment are bounded by type tests, analyses, or a combination of type tests and analyses.
7.b) The Class 1E components identified in Table 2.2.4-1 are powered from their respective Class 1E division.	Testing will be performed by providing a simulated test signal in each Class 1E division.	A simulated test signal exists at the Class 1E equipment identified in Table 2.2.4-1 when the assigned Class 1E division is provided the test signal.
7.c) Separation is provided between SGS Class 1E divisions, and between Class 1E divisions and non-Class 1E cable.	See Tier 1 Material, Table 3.3-6, item 7.d.	See Tier 1 Material, Table 3.3-6, item 7.d.

Table 2.2.4-4 (cont.)
Inspections, Tests, Analyses, and Acceptance Criteria

Design Commitment	Inspections, Tests, Analyses	Acceptance Criteria
8.a) The SGS provides a heat sink for the RCS and provides overpressure protection in accordance with Section III of the ASME Boiler and Pressure Vessel Code.	i) Inspections will be conducted to confirm that the value of the vendor code plate rating of the steam generator safety valves is greater than or equal to system relief requirements. ii) Testing and analyses in accordance with ASME Code Section III will be performed to determine set pressure.	i) The sum of the rated capacities recorded on the valve vendor code plates of the steam generator safety valves exceeds 8,240,000 lb/hr per steam generator. ii) A report exists to indicate the set pressure of the valves is less than 1305 psig.
8.b) During design basis events, the SGS limits steam generator blowdown and feedwater flow to the steam generator.	i) Testing will be performed to confirm isolation of the main feedwater, startup feedwater, blowdown, and main steam lines. See item 11 in this table. ii) Inspection will be performed for the existence of a report confirming that the area of the flow limiting orifice within the SG main steam outlet nozzle will limit releases to the containment.	See item 11 in this table. ii) A report exists to indicate the installed flow limiting orifice within the SG main steam line discharge nozzle does not exceed 1.4 sq. ft.
8.c) The SGS preserves containment integrity by isolation of the SGS lines penetrating the containment.	See Tier 1 Material, Table 2.2.1-3, item 7.	See Tier 1 Material, Table 2.2.1-3, item 7.
9.a) Components within the main steam system, main and startup feedwater system, and the main turbine system identified in Table 2.2.4-3 provide backup isolation of the SGS to limit steam generator blowdown and feedwater flow to the steam generator.	i) Testing will be performed to confirm closure of the valves identified in Table 2.2.4-3. ii) Testing will be performed to confirm the trip of the pumps identified in Table 2.2.4-3.	i) The valves identified in Table 2.2.4-3 close after a signal is generated by the PMS. ii) The pumps identified in Table 2.2.4-3 trip after a signal is generated by the PMS.

Table 2.2.4-4 (cont.)
Inspections, Tests, Analyses, and Acceptance Criteria

Design Commitment	Inspections, Tests, Analyses	Acceptance Criteria
9.b) During shutdown operations, the SGS removes decay heat by delivery of startup feedwater to the steam generator and venting of steam from the steam generators to the atmosphere.	i) Tests will be performed to demonstrate the ability of the startup feedwater system to provide feedwater to the steam generators. ii) Type tests and/or analyses will be performed to demonstrate the ability of the power-operated relief valves to discharge steam from the steam generators to the atmosphere.	i) See Tier 1 Material, Table 2.4.1-2, Item 2. ii) A report exists and concludes that each power-operated relief valve will relieve greater than 300,000 lb/hr at 1106 psia ±10 psi.
10. Safety-related displays identified in Table 2.2.4-1 can be retrieved in the MCR.	Inspection will be performed for retrievability of the safety-related displays in the MCR.	Safety-related displays identified in Table 2.2.4-1 can be retrieved in the MCR.
11.a) Controls exist in the MCR to cause the remotely operated valves identified in Table 2.2.4-1 to perform active functions.	Stroke testing will be performed on the remotely operated valves listed in Table 2.2.4-1 using controls in the MCR.	Controls in the MCR operate to cause the remotely operated valves to perform active safety functions.
11.b) The valves identified in Table 2.2.4-1 as having PMS control perform an active safety function after receiving a signal from PMS.	i) Testing will be performed on the remotely operated valves listed in Table 2.2.4-1 using real or simulated signals into the PMS. ii) Testing will be performed to demonstrate that remotely operated SGS isolation valves SGS-V027A/B, V040A/B, V057A/B, V250A/B close within the required response times.	i) The remotely-operated valves identified in Table 2.2.4-1 as having PMS control perform the active function identified in the table after receiving a signal from the PMS. ii) These valves close within the following times after receipt of an actuation signal: V027A/B < 44 sec V040A/B, V057A/B < 5 sec V250A/B < 5 sec

Table 2.2.4-4 (cont.)
Inspections, Tests, Analyses, and Acceptance Criteria

Design Commitment	Inspections, Tests, Analyses	Acceptance Criteria
12.a) The motor-operated valves identified in Table 2.2.4-1 perform an active safety-related function to change position as indicated in the table.	i) Tests or type tests of motor-operated valves will be performed to demonstrate the capability of the valve to operate under its design conditions. ii) Inspection will be performed for the existence of a report verifying that the as-built motor-operated valves are bounded by the tests or type tests. iii) Tests of the motor-operated valves will be performed under pre-operational flow, differential pressure, and temperature conditions.	i) A test report exists and concludes that each motor-operated valve changes position as indicated in Table 2.2.4-1 under design conditions. ii) A report exists and concludes that the as-built motor-operated valves are bounded by the tests or type tests. iii) Each motor-operated valve changes position as indicated in Table 2.2.4-1 under pre-operational test conditions.
12.b) After loss of motive power, the remotely operated valves identified in Table 2.2.4-1 assume the indicated loss of motive power position.	Testing of the remotely operated valves will be performed under the conditions of loss of motive power.	After loss of motive power, each remotely operated valve identified in Table 2.2.4-1 assumes the indicated loss of motive power position. Motive power to SGS-PL-V040A/B and SGS-PL-V057A/B is electric power to the actuator from plant services.

Table 2.2.4-5		
Component Name	**Tag No.**	**Component Location**
Main Steam Line Isolation Valve	SGS-PL-V040A	Auxiliary Building
Main Steam Line Isolation Valve	SGS-PL-V040B	Auxiliary Building
Main Feedwater Isolation Valve	SGS-PL-V057A	Auxiliary Building
Main Feedwater Isolation Valve	SGS-PL-V057B	Auxiliary Building
Main Feedwater Control Valve	SGS-PL-V250A	Auxiliary Building
Main Feedwater Control Valve	SGS-PL-V250B	Auxiliary Building
Turbine Stop Valves	MTS-PL-V001A MTS-PL-V001B MTS-PL-V003A MTS-PL-V003B	Turbine Building
Turbine Control Valves	MTS-PL-V002A MTS-PL-V002B MTS-PL-V004A MTS-PL-V004B	Turbine Building
Main Feedwater Pumps	FWS-MP-02A FWS-MP-02B FWS-MP-02C	Turbine Building
Feedwater Booster Pumps	FWS-MP-01A FWS-MP-01B FWS-MP-01C	Turbine Building

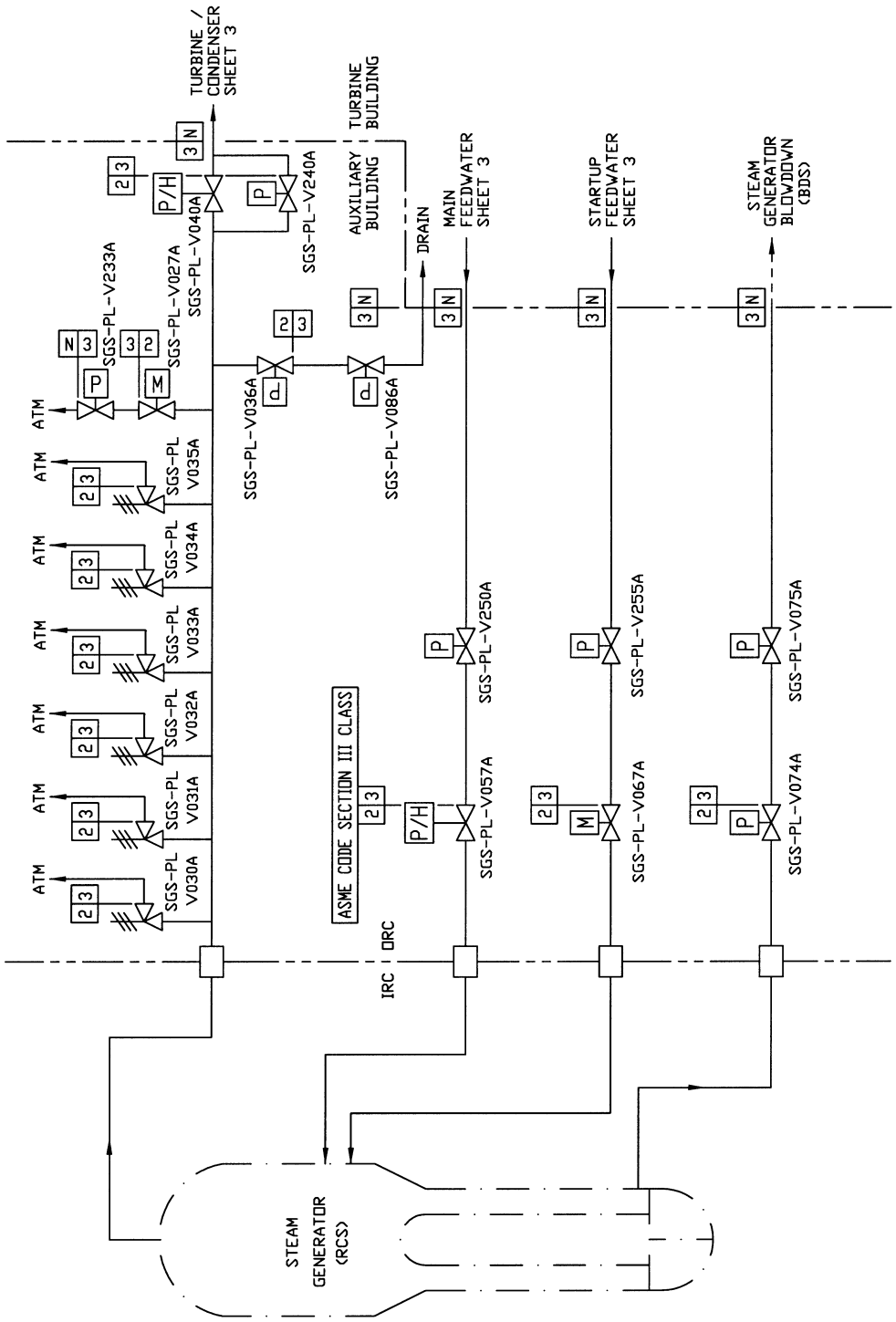

Figure 2.2.4-1 (Sheet 1 of 3)
Steam Generator System

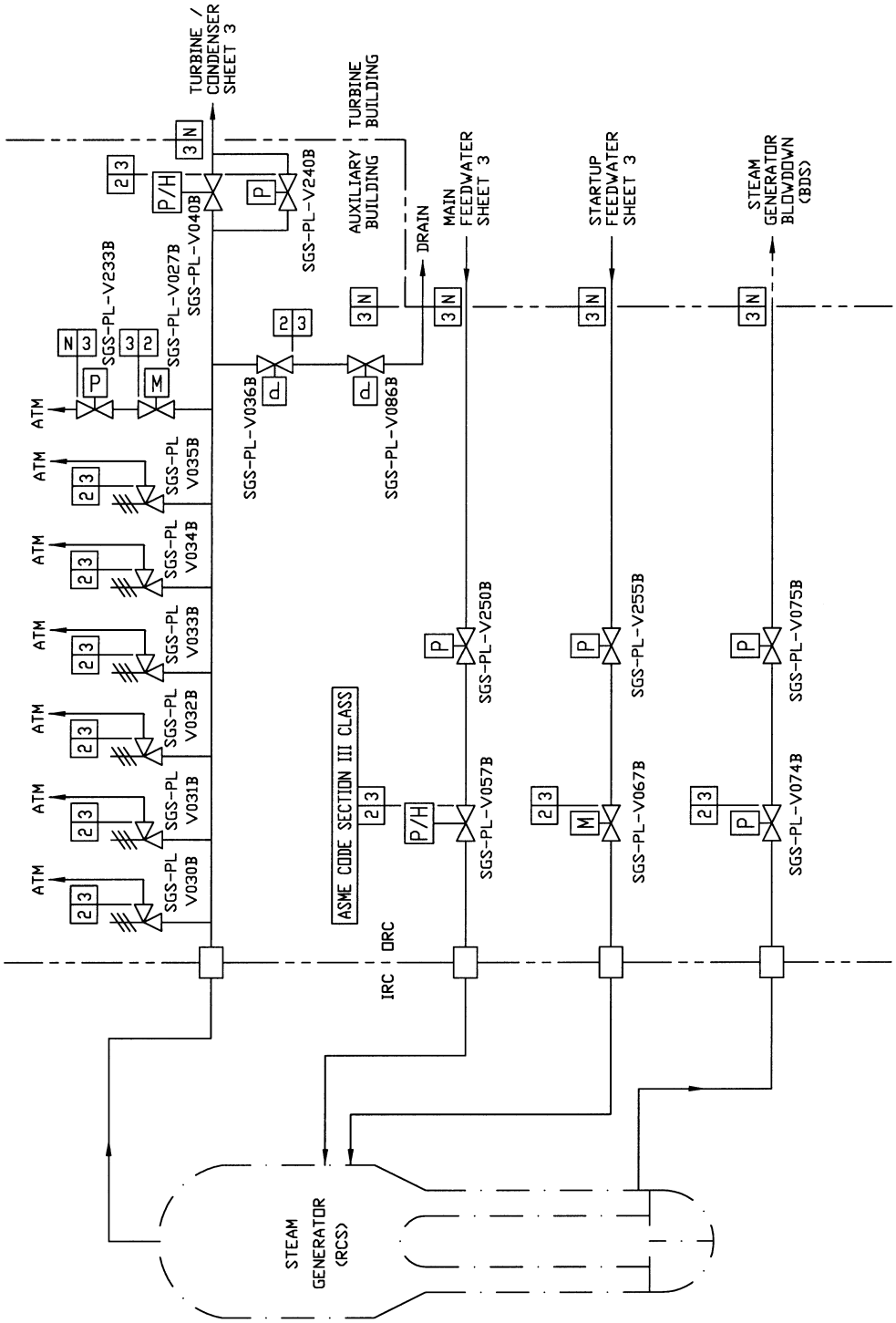

Figure 2.2.4-1 (Sheet 2 of 3)
Steam Generator System

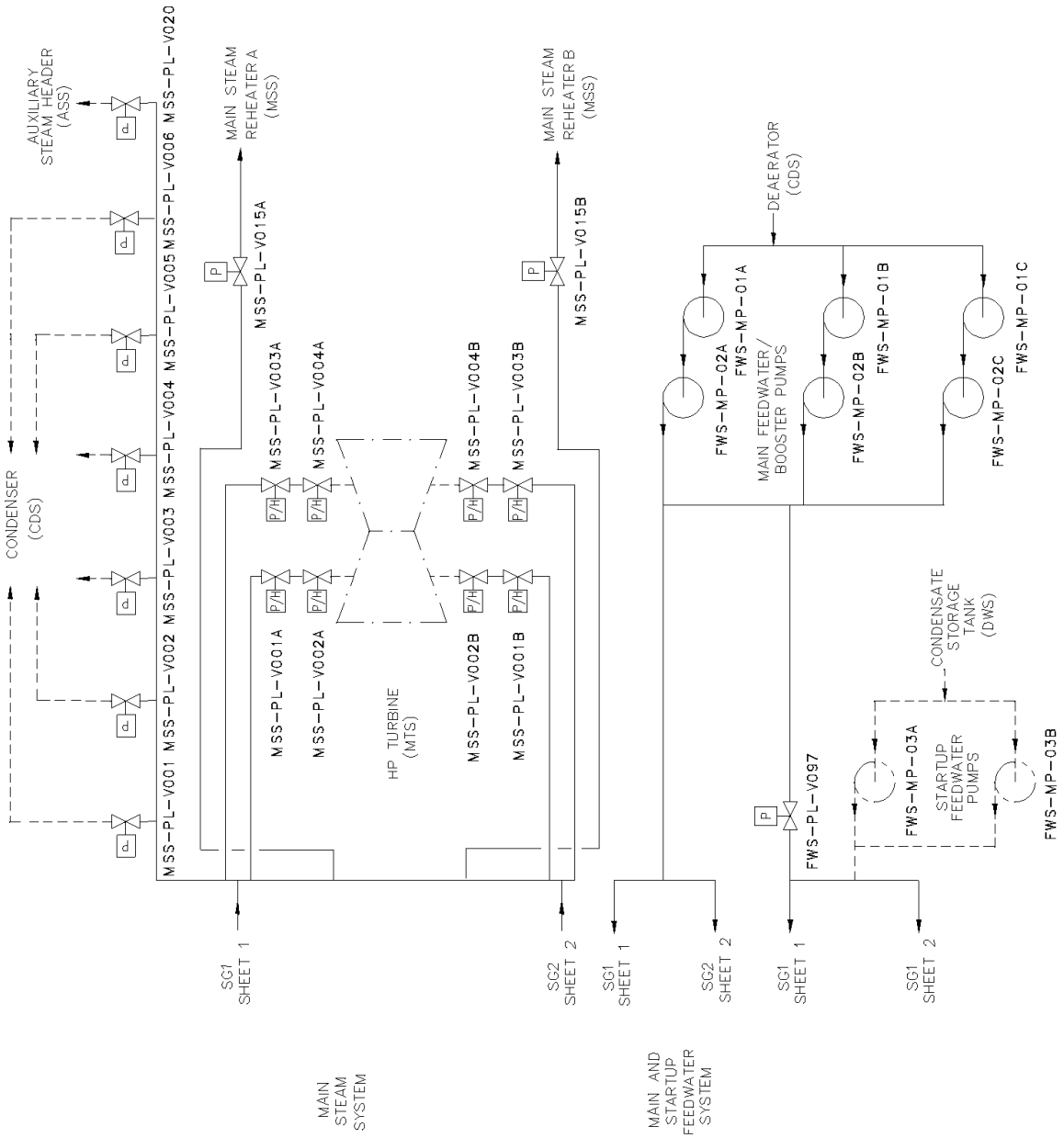

Figure 2.2.4-1 (Sheet 3 of 3)
Steam Generator System

2.2.5 Main Control Room Emergency Habitability System

Design Description

The main control room emergency habitability system (VES) provides a supply of breathable air for the main control room (MCR) occupants and maintains the MCR at a positive pressure with respect to the surrounding areas whenever ac power is not available to operate the nuclear island nonradioactive ventilation system (VBS) or high radioactivity is detected in the MCR air supply. (See Tier 1 material, Section 3.5 for Radiation Monitoring). The VES also limits the heatup of the MCR, the 1E instrumentation and control (I&C) equipment rooms, and the Class 1E dc equipment rooms by using the heat capacity of surrounding structures.

The VES is as shown in Figure 2.2.5-1 and the component locations of the VES are as shown in Table 2.2.5-6.

1. The functional arrangement of the VES is as described in the Design Description of this Section 2.2.5.

2. a) The components identified in Table 2.2.5-1 as ASME Code Section III are designed and constructed in accordance with ASME Code Section III requirements.

   b) The piping identified in Table 2.2.5-2 as ASME Code Section III is designed and constructed in accordance with ASME Code Section III requirements.

3. a) Pressure boundary welds in components identified in Table 2.2.5-1 as ASME Code Section III meet ASME Code Section III requirements.

   b) Pressure boundary welds in piping identified in Table 2.2.5-2 as ASME Code Section III meet ASME Code Section III requirements.

4. a) The components identified in Table 2.2.5-1 as ASME Code Section III retain their pressure boundary integrity at their design pressure.

   b) The piping identified in Table 2.2.5-2 as ASME Code Section III retains its pressure boundary integrity at its design pressure.

5. a) The seismic Category I equipment identified in Table 2.2.5-1 can withstand seismic design basis loads without loss of safety function.

   b) Each of the lines identified in Table 2.2.5-2 for which functional capability is required is designed to withstand combined normal and seismic design basis loads without a loss of its functional capability.

6. a) The Class 1E components identified in Table 2.2.5-1 are powered from their respective Class 1E division.

   b) Separation is provided between VES Class 1E divisions, and between Class 1E divisions and non-Class 1E cable.

7. The VES provides the following safety-related functions:

   a) The VES provides a 72-hour supply of breathable quality air for the occupants of the MCR.

   b) The VES maintains the MCR pressure boundary at a positive pressure with respect to the surrounding areas. There is a discharge of air through the MCR vestibule.

   c) The heat loads within the MCR, the I&C equipment rooms, and the Class 1E dc equipment rooms are within design basis assumptions to limit the heatup of the rooms identified in Table 2.2.5-4.

   d) The system provides a passive recirculation flow of MCR air to maintain main control room dose rates below an acceptable level during VES operation.

8. Safety-related displays identified in Table 2.2.5-1 can be retrieved in the MCR.

9. a) Controls exist in the MCR to cause those remotely operated valves identified in Table 2.2.5-1 to perform their active functions.

   b) The valves identified in Table 2.2.5-1 as having protection and safety monitoring system (PMS) control perform their active safety function after receiving a signal from the PMS.

10. After loss of motive power, the remotely operated valves identified in Table 2.2.5-1 assume the indicated loss of motive power position.

11. Displays of the parameters identified in Table 2.2.5-3 can be retrieved in the MCR.

12. The background noise level in the MCR does not exceed 65 dB(A) at the operator workstations when the VES is operating.

Inspections, Tests, Analyses, and Acceptance Criteria

Table 2.2.5-5 specifies the inspections, tests, analyses, and associated acceptance criteria for the VES.

Table 2.2.5-1

Equipment Name	Tag No.	ASME Code Section III	Seismic Cat. I	Remotely Operated Valve	Class 1E/ Qual. for Harsh Envir.	Safety-Related Display	Control PMS	Active Function	Loss of Motive Power Position
Emergency Air Storage Tank 01	VES-MT-01	No	Yes	-	-/-	-	-	-	-
Emergency Air Storage Tank 02	VES-MT-02	No	Yes	-	-/-	-	-	-	-
Emergency Air Storage Tank 03	VES-MT-03	No	Yes	-	-/-	-	-	-	-
Emergency Air Storage Tank 04	VES-MT-04	No	Yes	-	-/-	-	-	-	-
Emergency Air Storage Tank 05	VES-MT-05	No	Yes	-	-/-	-	-	-	-
Emergency Air Storage Tank 06	VES-MT-06	No	Yes	-	-/-	-	-	-	-
Emergency Air Storage Tank 07	VES-MT-07	No	Yes	-	-/-	-	-	-	-
Emergency Air Storage Tank 08	VES-MT-08	No	Yes	-	-/-	-	-	-	-
Emergency Air Storage Tank 09	VES-MT-09	No	Yes	-	-/-	-	-	-	-
Emergency Air Storage Tank 10	VES-MT-10	No	Yes	-	-/-	-	-	-	-

Note: Dash (-) indicates not applicable.

Table 2.2.5-1 (cont.)

Equipment Name	Tag No.	ASME Code Section III	Seismic Cat. I	Remotely Operated Valve	Class 1E/ Qual. for Harsh Envir.	Safety-Related Display	Control PMS	Active Function	Loss of Motive Power Position
Emergency Air Storage Tank 11	VES-MT-11	No	Yes	-	-/-	-	-	-	-
Emergency Air Storage Tank 12	VES-MT-12	No	Yes	-	-/-	-	-	-	-
Emergency Air Storage Tank 13	VES-MT-13	No	Yes	-	-/-	-	-	-	-
Emergency Air Storage Tank 14	VES-MT-14	No	Yes	-	-/-	-	-	-	-
Emergency Air Storage Tank 15	VES-MT-15	No	Yes	-	-/-	-	-	-	-
Emergency Air Storage Tank 16	VES-MT-16	No	Yes	-	-/-	-	-	-	-
Emergency Air Storage Tank 17	VES-MT-17	No	Yes	-	-/-	-	-	-	-
Emergency Air Storage Tank 18	VES-MT-18	No	Yes	-	-/-	-	-	-	-
Emergency Air Storage Tank 19	VES-MT-19	No	Yes	-	-/-	-	-	-	-
Emergency Air Storage Tank 20	VES-MT-20	No	Yes	-	-/-	-	-	-	-

Note: Dash (-) indicates not applicable.

Table 2.2.5-1 (cont.)

Equipment Name	Tag No.	ASME Code Section III	Seismic Cat. I	Remotely Operated Valve	Class 1E/ Qual. for Harsh Envir.	Safety-Related Display	Control PMS	Active Function	Loss of Motive Power Position
Emergency Air Storage Tank 21	VES-MT-21	No	Yes	-	-/-	-	-	-	-
Emergency Air Storage Tank 22	VES-MT-22	No	Yes	-	-/-	-	-	-	-
Emergency Air Storage Tank 23	VES-MT-23	No	Yes	-	-/-	-	-	-	-
Emergency Air Storage Tank 24	VES-MT-24	No	Yes	-	-/-	-	-	-	-
Emergency Air Storage Tank 25	VES-MT-25	No	Yes	-	-/-	-	-	-	-
Emergency Air Storage Tank 26	VES-MT-26	No	Yes	-	-/-	-	-	-	-
Emergency Air Storage Tank 27	VES-MT-27	No	Yes	-	-/-	-	-	-	-
Emergency Air Storage Tank 28	VES-MT-28	No	Yes	-	-/-	-	-	-	-
Emergency Air Storage Tank 29	VES-MT-29	No	Yes	-	-/-	-	-	-	-
Emergency Air Storage Tank 30	VES-MT-30	No	Yes	-	-/-	-	-	-	-

Note: Dash (-) indicates not applicable.

Table 2.2.5-1 (cont.)

Equipment Name	Tag No.	ASME Code Section III	Seismic Cat. I	Remotely Operated Valve	Class 1E/ Qual. for Harsh Envir.	Safety-Related Display	Control PMS	Active Function	Loss of Motive Power Position
Emergency Air Storage Tank 31	VES-MT-31	No	Yes	-	-/-	-	-	-	-
Emergency Air Storage Tank 32	VES-MT-32	No	Yes	-	-/-	-	-	-	-
Air Delivery Alternate Isolation Valve	VES-PL-V001	Yes	Yes	No	-/-	No	-	Transfer Open	-
Eductor Flow Path Isolation Valve	VES-PL-V045	Yes	Yes	No	-/-	No	-	Transfer Close	-
Eductor Bypass Isolation Valve	VES-PL-V046	Yes	Yes	No	-/-	No	-	Transfer Open	-
Pressure Regulating Valve A	VES-PL-V002A	Yes	Yes	No	-/-	No	-	Throttle Flow	-
Pressure Regulating Valve B	VES-PL-V002B	Yes	Yes	No	-/-	No	-	Throttle Flow	-
MCR Air Delivery Isolation Valve A	VES-PL-V005A	Yes	Yes	Yes	Yes/No	No	Yes	Transfer Open	Open
MCR Air Delivery Isolation Valve B	VES-PL-V005B	Yes	Yes	Yes	Yes/No	No	Yes	Transfer Open	Open
MCR Pressure Relief Isolation Valve A	VES-PL-V022A	Yes	Yes	Yes	Yes/No	No	Yes	Transfer Open	Open
MCR Pressure Relief Isolation Valve B	VES-PL-V022B	Yes	Yes	Yes	Yes/No	No	Yes	Transfer Open	Open

Note: Dash (-) indicates not applicable.

Table 2.2.5-1 (cont.)

Equipment Name	Tag No.	ASME Code Section III	Seismic Cat. I	Remotely Operated Valve	Class 1E/ Qual. for Harsh Envir.	Safety-Related Display	Control PMS	Active Function	Loss of Motive Power Position
Air Tank Safety Relief Valve A	VES-PL-V040A	Yes	Yes	No	-/-	No	-	Transfer Open	-
Air Tank Safety Relief Valve B	VES-PL-V040B	Yes	Yes	No	-/-	No	-	Transfer Open	-
Air Tank Safety Relief Valve C	VES-PL-V040C	Yes	Yes	No	-/-	No	-	Transfer Open	-
Air Tank Safety Relief Valve D	VES-PL-V040D	Yes	Yes	No	-/-	No	-	Transfer Open	-
Main Air Flow Path Isolation Valve	VES-PL-V044	Yes	Yes	No	-/-	No	-	Transfer Close	-
MCR Air Filtration Line Eductor	VES-PY-N01	Yes	Yes	-	-	-	-	-	-
MCR Air Filtration Line Charcoal Filter	VES-MY-F01	No	Yes	-	-	-	-	-	-
MCR Air Filtration Line HEPA Filter	VES-MY-F02	No	Yes	-	-	-	-	-	-
MCR Air Filtration Line Postfilter	VES-MY-F03	No	Yes	-	-	-	-	-	-
MCR Gravity Relief Dampers	VES-MD-D001A	No	Yes	-	-	-	-	-	-

Note: Dash (-) indicates not applicable.

Table 2.2.5-1 (cont.)

Equipment Name	Tag No.	ASME Code Section III	Seismic Cat. I	Remotely Operated Valve	Class 1E/ Qual. for Harsh Envir.	Safety-Related Display	Control PMS	Active Function	Loss of Motive Power Position
MCR Gravity Relief Dampers	VES-MD-D001B	No	Yes	-	-	-	-	-	-
MCR Air Filtration Line Supply Damper	VES-MD-D002	No	Yes	-	-	-	-	-	-
MCR Air Filtration Line Supply Damper	VES-MD-D003	No	Yes	-	-	-	-	-	-
MCR Air Filtration Line Silencer	VES-MY-Y01	No	Yes	-	-	-	-	-	-
MCR Air Filtration Line Silencer	VES-MY-Y02	No	Yes	-	-	-	-	-	-
MCR Air Delivery Line Flow Sensor	VES-003A	No	Yes	-	Yes/No	Yes	-	-	-
MCR Air Delivery Line Flow Sensor	VES-003B	No	Yes	-	Yes/No	Yes	-	-	-
MCR Differential Pressure Sensor A	VES-004A	No	Yes	-	Yes/No	Yes	-	-	-
MCR Differential Pressure Sensor B	VES-004B	No	Yes	-	Yes/No	Yes	-	-	-

Note: Dash (-) indicates not applicable.

Table 2.2.5-2			
Line Name	**Line Number**	**ASME Code Section III**	**Functional Capability Required**
MCR Relief Line	VES-PL-022A	Yes	Yes
MCR Relief Line	VES-PL-022B	Yes	Yes

Table 2.2.5-3		
Equipment	**Tag No.**	**Display**
Air Storage Tank Pressure	VES-001A	Yes
Air Storage Tank Pressure	VES-001B	Yes

Table 2.2.5-4			
Room Name	**Room Numbers**	**Heat Load 0 to 24 Hours (Btu/s)**	**Heat Load 24 to 72 Hours (Btu/s)**
MCR Envelope	12401	12.8 (hour 0 through 3) 5.1 (hour 4 through 24)	3.9
I&C Rooms	12301, 12305	8.8	0
I&C Rooms	12302, 12304	13.0	4.2
dc Equipment Rooms	12201, 12205	3.7 (hour 0 through 1) 2.4 (hour 2 through 24)	0
dc Equipment Rooms	12203, 12207	5.8 (hour 0 through 1) 4.5 (hour 2 through 24)	2.0

Table 2.2.5-5
Inspections, Tests, Analyses, and Acceptance Criteria

Design Commitment	Inspections, Tests, Analyses	Acceptance Criteria
1. The functional arrangement of the VES is as described in the Design Description of this Section 2.2.5.	Inspection of the as-built system will be performed.	The as-built VES conforms with the functional arrangement described in the Design Description of this Section 2.2.5.
2.a) The components identified in Table 2.2.5-1 as ASME Code Section III are designed and constructed in accordance with ASME Code Section III requirements.	Inspection will be conducted of the as-built components as documented in the ASME design reports.	The ASME Code Section III design reports exist for the as-built components identified in Table 2.2.5-1 as ASME Code Section III.
2.b) The piping identified in Table 2.2.5-2 as ASME Code Section III is designed and constructed in accordance with ASME Code Section III requirements.	Inspection will be conducted of the as-built piping as documented in the ASME design reports.	The ASME Code Section III design reports exist for the as-built piping identified in Table 2.2.5-2 as ASME Code Section III.
3.a) Pressure boundary welds in components identified in Table 2.2.5-1 as ASME Code Section III meet ASME Code Section III requirements.	Inspection of the as-built pressure boundary welds will be performed in accordance with the ASME Code Section III.	A report exists and concludes that the ASME Code Section III requirements are met for non-destructive examination of pressure boundary welds.
3.b) Pressure boundary welds in piping identified in Table 2.2.5-2 as ASME Code Section III meet ASME Code Section III requirements.	Inspection of the as-built pressure boundary welds will be performed in accordance with the ASME Code Section III.	A report exists and concludes that the ASME Code Section III requirements are met for non-destructive examination of pressure boundary welds.
4.a) The components identified in Table 2.2.5-1 as ASME Code Section III retain their pressure boundary integrity at their design pressure.	A hydrostatic test will be performed on the components required by the ASME Code Section III to be hydrostatically tested.	A report exists and concludes that the results of the hydrostatic test of the components identified in Table 2.2.5-1 as ASME Code Section III conform with the requirements of the ASME Code Section III.
4.b) The piping identified in Table 2.2.5-2 as ASME Code Section III retains its pressure boundary integrity at its design pressure.	A hydrostatic test will be performed on the piping required by the ASME Code Section III to be hydrostatically tested.	A report exists and concludes that the results of the hydrostatic test of the piping identified in Table 2.2.5-2 as ASME Code Section III conform with the requirements of the ASME Code Section III.

Table 2.2.5-5 (cont.)
Inspections, Tests, Analyses, and Acceptance Criteria

Design Commitment	Inspections, Tests, Analyses	Acceptance Criteria
5.a) The seismic Category I equipment identified in Table 2.2.5-1 can withstand seismic design basis loads without loss of safety function.	i) Inspection will be performed to verify that the seismic Category I equipment and valves identified in Table 2.2.5-1 are located on the Nuclear Island. ii) Type tests, analyses, or a combination of type tests and analyses of seismic Category I equipment will be performed. iii) Inspection will be performed for the existence of a report verifying that the as-built equipment including anchorage is seismically bounded by the tested or analyzed conditions.	i) The seismic Category I equipment identified in Table 2.2.5-1 is located on the Nuclear Island. ii) A report exists and concludes that the seismic Category I equipment can withstand seismic design basis loads without loss of safety function. iii) A report exists and concludes that the as-built equipment including anchorage is seismically bounded by the tested or analyzed conditions.
5.b) Each of the lines identified in Table 2.2.5-2 for which functional capability is required is designed to withstand combined normal and seismic design basis loads without a loss of its functional capability.	Inspection will be performed for the existence of a report verifying that the as-built piping meets the requirements for functional capability.	A report exists and concludes that each of the as-built lines identified in Table 2.2.5-2 for which functional capability is required meets the requirements for functional capability.
6.a) The Class 1E components identified in Table 2.2.5-1 are powered from their respective Class 1E division.	Testing will be performed by providing a simulated test signal in each Class 1E division.	A simulated test signal exists at the Class 1E equipment identified in Table 2.2.5-1 when the assigned Class 1E division is provided the test signal.
6.b) Separation is provided between VES Class 1E divisions, and between Class 1E divisions and non-Class 1E cable.	See Tier 1 Material, Table 3.3-6, item 7.d.	See Tier 1 Material, Table 3.3-6, item 7.d.

Table 2.2.5-5 (cont.)
Inspections, Tests, Analyses, and Acceptance Criteria

Design Commitment	Inspections, Tests, Analyses	Acceptance Criteria
7.a) The VES provides a 72-hour supply of breathable quality air for the occupants of the MCR.	i) Testing will be performed to confirm that the required amount of air flow is delivered to the MCR. ii) Analysis of storage capacity will be performed based on manufacturers data. iii) MCR air samples will be taken during VES testing and analyzed for quality.	i) The air flow rate from the VES is at least 60 scfm and not more than 70 scfm. ii) The calculated storage capacity is greater than or equal to 327,574 scf. iii) The MCR air is of breathable quality.
7.b) The VES maintains the MCR pressure boundary at a positive pressure with respect to the surrounding areas.	i) Testing will be performed with VES flow rate between 60 and 70 scfm to confirm that the MCR is capable of maintaining the required pressurization of the pressure boundary. ii) Air leakage into the MCR will be measured during VES testing using a tracer gas.	i) The MCR pressure boundary is pressurized to greater than or equal to 1/8-in. water gauge with respect to the surrounding area. ii) Air leakage into the MCR is less than or equal to 10 cfm.
7.c) The heat loads within the MCR, the I&C equipment rooms, and the Class 1E dc equipment rooms are within design basis assumptions to limit the heatup of the rooms identified in Table 2.2.5-4.	An analysis will be performed to determine that the heat loads from as-built equipment within the rooms identified in Table 2.2.5-4 are less than or equal to the design basis assumptions.	A report exists and concludes that: the heat loads within rooms identified in Table 2.2.5-4 are less than or equal to the specified values or that an analysis report exists that concludes: – The temperature and humidity in the MCR remain within limits for reliable human performance for the 72-hour period. – The maximum temperature for the 72-hour period for the I&C rooms is less than or equal to 120°F. – The maximum temperature for the 72-hour period for the Class 1E dc equipment rooms is less than or equal to 120°F.

Table 2.2.5-5 (cont.)
Inspections, Tests, Analyses, and Acceptance Criteria

Design Commitment	Inspections, Tests, Analyses	Acceptance Criteria
7d) The system provides a passive recirculation flow of MCR air to maintain main control room dose rates below an acceptable level during VES operation.	Testing will be performed to confirm that the required amount of air flow circulates through the MCR passive filtration system,	The air flow rate at the outlet of the MCR passive filtration system is at least 600 cfm greater than the flow measured by VES-003A/B.
8. Safety-related displays identified in Table 2.2.5-1 can be retrieved in the MCR.	Inspection will be performed for retrievability of the safety-related displays in the MCR.	Safety-related displays identified in Table 2.2.5-1 can be retrieved in the MCR.
9.a) Controls exist in the MCR to cause remotely operated valves identified in Table 2.2.5-1 to perform their active functions.	Stroke testing will be performed on remotely operated valves identified in Table 2.2.5-1 using the controls in the MCR.	Controls in the MCR operate to cause remotely operated valves identified in Table 2.2.5-1 to perform their active safety functions.
9.b) The valves identified in Table 2.2.5-1 as having PMS control perform their active safety function after receiving a signal from the PMS.	Testing will be performed on remotely operated valves listed in Table 2.2.5-1 using real or simulated signals into the PMS.	The remotely operated valves identified in Table 2.2.5-1 as having PMS control perform the active safety function identified in the table after receiving a signal from the PMS.
10. After loss of motive power, the remotely operated valves identified in Table 2.2.5-1 assume the indicated loss of motive power position.	Testing of the remotely operated valves will be performed under the conditions of loss of motive power.	After loss of motive power, each remotely operated valve identified in Table 2.2.5-1 assumes the indicated loss of motive power position.
11. Displays of the parameters identified in Table 2.2.5-3 can be retrieved in the MCR.	Inspection will be performed for retrievability of the parameters in the MCR.	The displays identified in Table 2.2.5-3 can be retrieved in the MCR.
12. The background noise level in the MCR does not exceed 65 dB(A) at the operator workstations when VES is operating.	The as-built VES will be operated, and background noise levels in the MRC will be measured at the operator work stations with the plant not operating.	The background noise level in the MCR does not exceed 65 dB(A) at the operator work stations when the VES is operating.

Table 2.2.5-6		
Component Name	**Tag Number**	**Component Location**
Emergency Air Storage Tank 01	VES-MT-01	Auxiliary Building
Emergency Air Storage Tank 02	VES-MT-02	Auxiliary Building
Emergency Air Storage Tank 03	VES-MT-03	Auxiliary Building
Emergency Air Storage Tank 04	VES-MT-04	Auxiliary Building
Emergency Air Storage Tank 05	VES-MT-05	Auxiliary Building
Emergency Air Storage Tank 06	VES-MT-06	Auxiliary Building
Emergency Air Storage Tank 07	VES-MT-07	Auxiliary Building
Emergency Air Storage Tank 08	VES-MT-08	Auxiliary Building
Emergency Air Storage Tank 09	VES-MT-09	Auxiliary Building
Emergency Air Storage Tank 10	VES-MT-10	Auxiliary Building
Emergency Air Storage Tank 11	VES-MT-11	Auxiliary Building
Emergency Air Storage Tank 12	VES-MT-12	Auxiliary Building
Emergency Air Storage Tank 13	VES-MT-13	Auxiliary Building
Emergency Air Storage Tank 14	VES-MT-14	Auxiliary Building
Emergency Air Storage Tank 15	VES-MT-15	Auxiliary Building
Emergency Air Storage Tank 16	VES-MT-16	Auxiliary Building
Emergency Air Storage Tank 17	VES-MT-17	Auxiliary Building
Emergency Air Storage Tank 18	VES-MT-18	Auxiliary Building
Emergency Air Storage Tank 19	VES-MT-19	Auxiliary Building
Emergency Air Storage Tank 20	VES-MT-20	Auxiliary Building
Emergency Air Storage Tank 21	VES-MT-21	Auxiliary Building
Emergency Air Storage Tank 22	VES-MT-22	Auxiliary Building
Emergency Air Storage Tank 23	VES-MT-23	Auxiliary Building
Emergency Air Storage Tank 24	VES-MT-24	Auxiliary Building
Emergency Air Storage Tank 25	VES-MT-25	Auxiliary Building
Emergency Air Storage Tank 26	VES-MT-26	Auxiliary Building
Emergency Air Storage Tank 27	VES-MT-27	Auxiliary Building
Emergency Air Storage Tank 28	VES-MT-28	Auxiliary Building

Table 2.2.5-6 (cont.)		
Component Name	**Tag Number**	**Component Location**
Emergency Air Storage Tank 29	VES-MT-29	Auxiliary Building
Emergency Air Storage Tank 30	VES-MT-30	Auxiliary Building
Emergency Air Storage Tank 31	VES-MT-31	Auxiliary Building
Emergency Air Storage Tank 32	VES-MT-32	Auxiliary Building

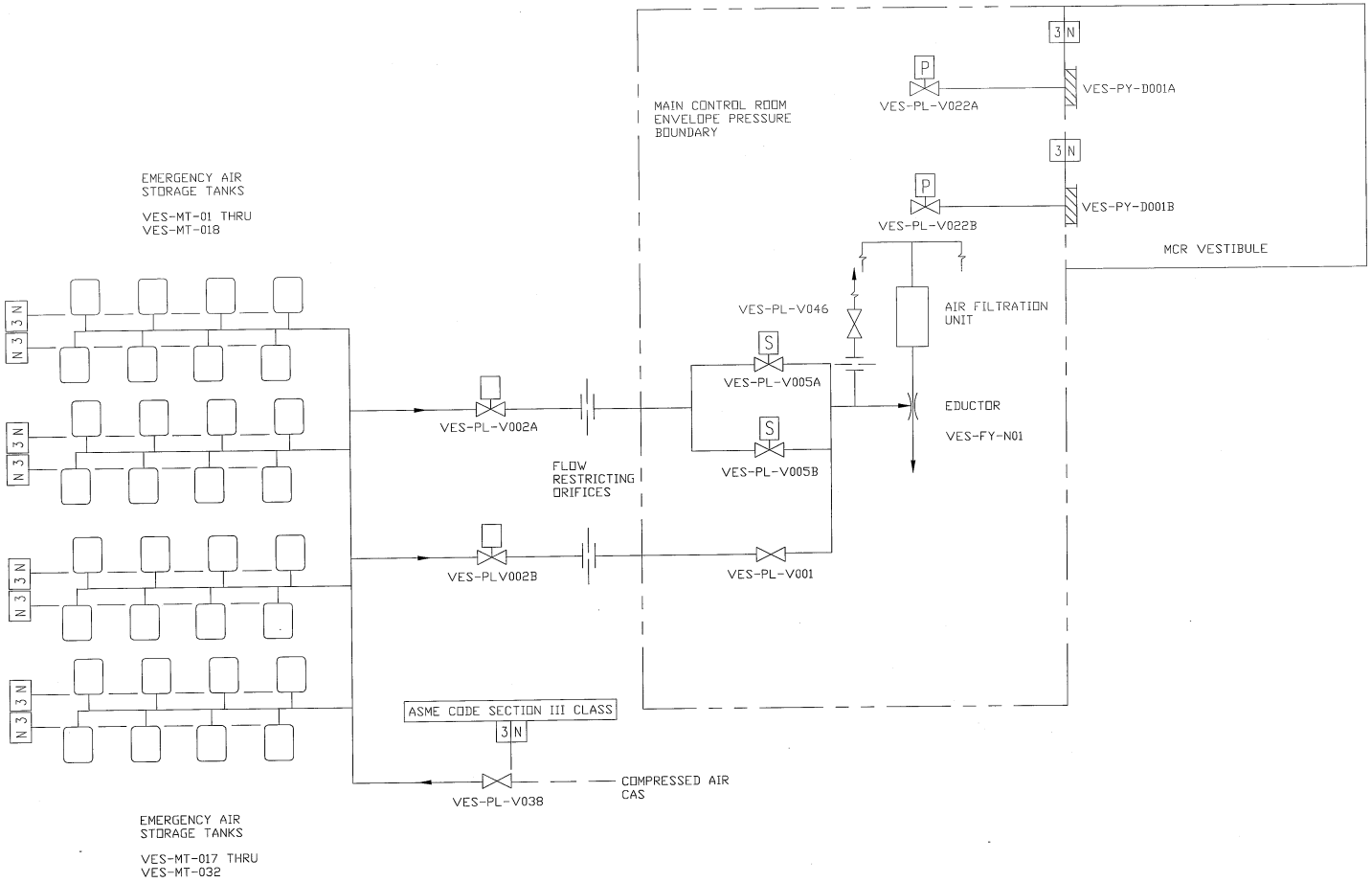

Figure 2.2.5-1
Main Control Room Emergency Habitability System