General Information or Other (PAR) Event # 46461

Rep Org:	ULTRA ELECTRONICS	**Notification Date / Time:**	12/07/2010 09:58 (EST)
Supplier:	ULTRA ELECTRONICS	**Event Date / Time:**	12/06/2010 (CST)
		Last Modification:	12/07/2010

Region:	4	**Docket #:**	
City:	ROUND ROCK	**Agreement State:**	Yes
County:	USA	**License #:**	
State:	TX		

NRC Notified by:	MARK MCCRAY	**Notifications:**	CHRISTOPHER CAHILL	R1DO
HQ Ops Officer:	JOHN SHOEMAKER		SCOTT SHAEFFER	R2DO
Emergency Class:	NON EMERGENCY		ROBERT DALEY	R3DO
10 CFR Section:			MICHAEL HAY	R4DO
21.21	UNSPECIFIED PARAGRAPH		NRR	EMAIL
			NRO	EMAIL

FAIL SAFE FUNCTION OF THE N7000 SERIES TEMPERATURE TRANSMITTER DOES NOT OPERATE CORRECTLY UNDER CERTAIN CONDITIONS

"The functional issue is limited to N7000 transmitters where the field selectable jumper is set for downscale indication upon loss of input (open circuit, over range RTD, or short circuit). The transmitter may indicate a mid-range output upon open circuit or over range RTD input instead of going downscale (4 mA) as intended. Short circuit detection operates correctly in all cases.

"This issue does not affect temperature transmitters during normal operating conditions, only the downscale input sensor failure indication function. N7000 transmitters that have been set for upscale sensor failure indication are not affected; however, this notification is applicable to all N7000 customers because the sensor failure indication is field selectable."

The following sites are affected: Oconee, Calvert Cliffs, Perry, North Anna, Surry, Framatome ANP, Kewaunee, Diablo Canyon, and Hope Creek.

****

IE19
NRR

Ultra Electronics
NUCLEAR SENSORS &
PROCESS INSTRUMENTATION
707 Jeffrey Way
PO Box 300
Round Rock, TX 78680-0300
USA
Tel +1 512 434 2800
Fax +1 512 434 2801
www.ultra-nspi.com

December 7, 2010

U.S. Nuclear Regulatory Commission
Washington, DC 20555-0001
Attn: Document Control Desk

Re: Notification under 10 CFR Part 21 concerning Weed Instrument N7000 Series RTD Temperature Transmitters

Weed Instrument Co., Inc. d/b/a Ultra Electronics, Nuclear Sensors & Process Instrumentation is writing to inform you of a functional issue with Weed Instrument N7000 Series RTD Temperature Transmitters.

Name and address of the individual informing the Commission:

Mark A. McCray, P.E.
Vice President, Engineering
Ultra Electronics
NUCLEAR SENSORS & PROCESS INSTRUMENTATION
707 Jeffrey Way
Round Rock, Texas 78665-2408 USA

Identification of items supplied:

Weed Instrument N7000 Series RTD Temperature Transmitters supplied between July 1995 and December 2010. A listing of items supplied is attached.

Identification of firm supplying the items:

Weed Instrument Co., Inc.
d/b/a Ultra Electronics, Nuclear Sensors & Process Instrumentation
707 Jeffrey Way
Round Rock, Texas 78665-2408 USA

Nature of the defect and potential safety hazard:

The fail safe function of the N7000 transmitter does not operate correctly under certain conditions. The functional issue is limited to N7000 transmitters where the field selectable jumper is set for downscale indication upon loss of input (open circuit, over range RTD, or short circuit). The transmitter may indicate a mid-range output upon open circuit or over range RTD input instead of going downscale (<4 mA) as intended. Short circuit detection operates correctly in all cases.

This issue does not affect temperature transmitters during normal operating conditions, only the downscale input sensor failure indication function. N7000 transmitters that have been set for upscale sensor failure indication are not affected; however, this notification is applicable to all N7000 customers because the sensor failure indication is field selectable.

Ultra Electronics
Nuclear Sensors & Process Instrumentation is
a business name of Weed Instrument Co., Inc.

Ultra Electronics, Nuclear Sensors & Process Instrumentation received a complaint from representatives of AREVA NP INC. concerning N7014 transmitters supplied to FRAMTOME NP INC. for a project at Duke Energy's Oconee Nuclear Station. During pre-commission testing it was observed that transmitters were indicating mid range output during over-temperature and open-circuit input conditions rather than downscale. A preliminary evaluation by Ultra Electronics, Nuclear Sensors & Process Instrumentation concluded that a Technical/Safety Evaluation is required; that evaluation was conducted between November 4, 2010 and December 6, 2010.

The Technical/Safety Evaluation concluded a design defect exists that affects the fail-safe function of N7000 Series Temperature Transmitters as follows: 3-wire (N7003, N7013) transmitters configured for downscale indication upon loss of input (open circuit, over range RTD, or short circuit) when spanned to the lower half of the selectable temperature range and all 4-wire transmitters (N7004, N70014) configured for downscale indication upon loss of input.

Corrective actions:

The functional issue described above has been corrected for all N7000 products produced or serviced in December 2010 or on any date thereafter.

Affected transmitters may be returned to Ultra Electronics, Nuclear Sensors & Process Instrumentation for rework to correct the issue per the contract terms and conditions. Alternatively, new transmitters may be purchased.

Advice that will be provided to the industry concerning the issue:

A Product Quality Advisory will be issued to purchasers and licensees. A copy is attached to this notification.

Weed Instrument Co., Inc. d/b/a Ultra Electronics, Nuclear Sensors & Process Instrumentation does not have adequate knowledge of all service applications to determine if the issue described in this notification could create a substantial safety hazard, therefore this notice is being issued under the provisions of 10 CFR 21. The end user is advised to determine the impact of this potential issue on its plant's operation and safety and take action as deemed appropriate.

If you have questions or require additional information concerning this notification please let me know.

Sincerely,

Mark A. McCray, P.E.
Vice President, Engineering

cc: Dan Upp, President

Attachments

PRODUCT QUALITY ADVISORY

Ref: Weed Instrument N7000 Series RTD Temperature Transmitters.

Models	
3-Wire RTD: N7003, N7013	4-Wire RTD: N7004, N7014

Date: December 7, 2010

Dear Customer,

The purpose of this product quality advisory is to inform you of a functional issue that exists with the products listed above. The N7000 Series Temperature Transmitter provides high accuracy transmission of temperature measurements and is qualified for use in safety related applications per IEEE 344-1987 for seismic applications. Weed Instrument Co., Inc. d/b/a Ultra Electronics, Nuclear Sensors & Process Instrumentation does not have adequate knowledge of all service applications to determine if the issue described in this advisory could create a substantial safety hazard, therefore this advisory is being issued under the provisions of 10 CFR 21. This advisory explains the functional issue and the steps being taken to rectify the situation.

- Issue Description -

With the above-mentioned Weed Instrument products, hereinafter referred to as N7000, the following functional issue exists:

Functional Issue – The fail safe function of the N7000 transmitter does not operate correctly under certain conditions. The functional issue is limited to N7000 transmitters where the field selectable jumper is set for downscale indication upon loss of input (open circuit, over range RTD, or short circuit). The transmitter may indicate a mid-range output upon open circuit or over range RTD input instead of going downscale (<4 mA) as intended. Short circuit detection operates correctly in all cases.

A Technical/Safety Evaluation concluded a design defect exists that affects the fail-safe function of N7000 Series Temperature Transmitters as follows: 3-wire (N7003, N7013) transmitters configured for downscale indication upon loss of input when spanned to the lower half of the selectable temperature range and all 4-wire transmitters (N7004, N70014) configured for downscale indication upon loss of input.

This issue does not affect temperature transmitters during normal operating conditions, only the downscale input sensor failure indication function. N7000 transmitters that have been set for upscale sensor failure indication are not affected; however, this notification is applicable to all N7000 customers because the sensor failure indication is field selectable.

- Workarounds -

A possible workaround is to change the Sensor Failure Indication from downscale to upscale as described in the instruction manual. Changing the Sensor Failure Indication will not effect the calibration of the transmitter. The user will need to evaluate the impact of this change and if any other control system changes may be required to accompany the transmitter sensor failure mode change for safe plant operation.

- Product Identification -

All Weed Instrument N7000 Series RTD Temperature Transmitters are subject to this advisory.

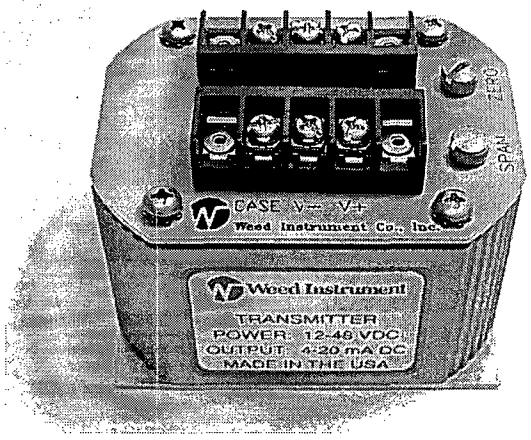

- Issue Correction -

The functional issue described above has been **corrected** for all N7000 products produced or serviced in December 2010 or on any date thereafter.

- Field Inspections-

Inspections may be performed in the field to determine if a particular transmitter is affected. A device listing showing upscale/downscale factory settings is available from Ultra Electronics, Nuclear Sensors & Process Instrumentation to assist the end user with their review.

1.0 VERIFICATION EQUIPMENT

1.1 Digital Multi-Meter
Resolution: 0.01 mA DC
Accuracy: ± 0.02 mA DC

1.2 Resistance Decade RTD Sensor Simulator (Decade Box)
Resolution: 0.01-Ohm
Accuracy: ± 0.1%

1.3 Power Supply
Nominal Output: 24 VDC (or field supply voltage level)

2.0 VERIFICATION PROCEDURE

If the transmitter has a 4-wire RTD input, connect the transmitter as shown in Figure 1 and use Figure 2 for 3-wire RTD input models.

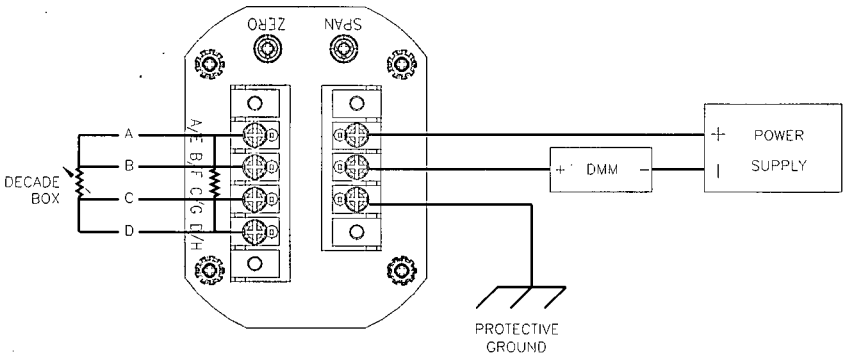

Figure 1, 4-wire RTD transmitter

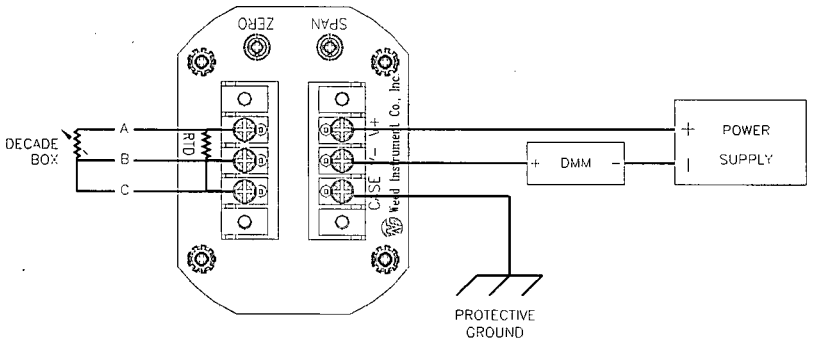

Figure 2, 3-wire RTD transmitter

Set the decade box to a value near the mid-scale RTD resistance for the transmitter's calibrated range. Turn on the power supply. The meter will display a near mid-scale output (12mA). Disconnect the "B" wire from the Decade Box. If the transmitter's output current falls below 4mA, the transmitter is configured internally for downscale sensor failure indication and if the output rises above 20mA, then it is configured for upscale sensor failure indication. **In all the remaining steps, the output shall follow the result from removing the "B" wire (upscale or downscale) or the transmitter should be considered faulty.** The exact milliamp output may vary in the steps below but should always move in the same direction and never indicate a reading between 4 and 20mA.

Using the list below, remove the wires from the Decade Box for at least 15 seconds. During the first 5 seconds of the 15-second period, the transmitter should indicate a sensor failure in the same direction as the "B" wire removal performed above and should not move back into the 4-20mA region or the

transmitter is considered faulty. Return the individual wires to the Decade Box at the end of the 15-second period.
Wire A
Wire B
Wire C
Wire D (if present)
Wires A&B (4-wire models only)
Wires C&D (4-wire models only)
Wires B&C (3-wire models only)

- Requested Customer Action -

The end user is advised to determine the impact of this potential issue on its plant's operation and safety and take action as deemed appropriate.

Affected transmitters may be returned to Ultra Electronics, Nuclear Sensors & Process Instrumentation for rework to correct the issue per the contract terms and conditions. Rework must be done at the factory. Alternatively, new transmitters may be purchased.

Ultra Electronics, Nuclear Sensors & Process Instrumentation has been supplying nuclear qualified temperature sensors, thermowells and transmitters, pressure transmitters and fiber optic modems for more than three decades and remains dedicated to provide the nuclear industry with high quality products, timely deliveries and personalized service. Worldwide sales support and flexible engineering, together with state-of-the-art manufacturing operations, allow us to consistently meet our customers sensing needs with reliable, practical and economical solutions.

If you require any further assistance, contact Ultra Electronics, Nuclear Sensors & Process Instrumentation or your representative's sales and Support office. The primary contact is listed below.

Contact: Mr. Ben Montemayor, Application Specialist

Toll Free: 800-880-9333
Phone: +1 (512) 434-2979
Fax: +1 (512) 434-2951
Email: ben.montemayor@ultra-nspi.com
http://ultra-nspi.com

Mailing Address
Ultra Electronics, Nuclear Sensors & Process Instrumentation
P.O. Box 300
Round Rock, TX 78680-0300
USA

Shipping / Street Address
Ultra Electronics, Nuclear Sensors & Process Instrumentation
707 Jeffrey Way
Round Rock, TX 78665-2408
USA

We require and appreciate your immediate cooperation in this matter.

Weed Instrument N7000 Series Transmitters

ALSTOM POWER TURBOMACHINE

PROJECT: SHIN KORI & SHIN WOLSONG

Shipped	SOIR	Configuration	Model	Fail Mode	Hsg.	Age(yr)	QTY	Application Notes	Product Quality Advisory based on factory settings
8/23/2007	368663.10.1	N7013RP-0-U-10-S	N7013 3-WIRE Pt 100	Upscale	Ex	3.3	8	8 ea. (0-110℃), 100W, 3-wire, EMI mods	Not affected - upscale fail mode
8/23/2007	368663.4.1	N7013RP-0-U-10-S	N7013 3-WIRE Pt 100	Upscale	Ex	3.3	8	8 ea. (0-110℃), 100W, 3-wire, EMI mods	Not affected - upscale fail mode
8/23/2007	368663.5.1	N7013RP-0-U-10-S	N7013 3-WIRE Pt 100	Upscale	Ex	3.3	8	8 ea. (0-110℃), 100W, 3-wire, EMI mods	Not affected - upscale fail mode
8/23/2007	368663.6.1	N7013RP-0-U-10-S	N7013 3-WIRE Pt 100	Upscale	Ex	3.3	8	8 ea. (0-110℃), 100W, 3-wire, EMI mods	Not affected - upscale fail mode
8/23/2007	368663.7.1	N7013RP-0-U-10-S	N7013 3-WIRE Pt 100	Upscale	Ex	3.3	8	8 ea. (0-110℃), 100W, 3-wire, EMI mods	Not affected - upscale fail mode
8/23/2007	368663.8.1	N7013RP-0-U-10-S	N7013 3-WIRE Pt 100	Upscale	Ex	3.3	8	8 ea. (0-110℃), 100W, 3-wire, EMI mods	Not affected - upscale fail mode
8/23/2007	368663.9.1	N7013RP-0-U-10-S	N7013 3-WIRE Pt 100	Upscale	Ex	3.3	8	8 ea. (0-110℃), 100W, 3-wire, EMI mods	Not affected - upscale fail mode

Weed Instrument N7000 Series Transmitters

ATOMIC ENERGY OF CANADA LTD

PROJECT: CHALK RIVER

Shipped	SOIR	Configuration	Model	Fail Mode	Hsg.	Age(yr)	QTY	Application Notes	Product Quality Advisory based on factory settings
6/19/2006	365093.1.1	N7004>RP0U00C	N7004 4-WIRE Pt 100	Upscale	None	4.5	1	1 ea. (0-100℃), 100W, 3-wire	Not affected - upscale fail mode

PROJECT: MAPLE 1 & 2

Shipped	SOIR	Configuration	Model	Fail Mode	Hsg.	Age(yr)	QTY	Application Notes	Product Quality Advisory based on factory settings
2/27/1999	336343.7.1	N7004-RP-0-U-00-C	N7004 4-WIRE Pt 100	Upscale	None	11.8	29	21 ea. (0-60℃), 100Ω, 4-wire 8 ea. (0-100℃), 100Ω, 4-wire	Not affected - upscale fail mode
4/30/1999	336343.7.2	N7004-RP-0-U-00-C	N7004 4-WIRE Pt 100	Upscale	None	11.6	29	21 ea. (0-60℃), 100Ω, 4-wire 8 ea. (0-100℃), 100Ω, 4-wire	Not affected - upscale fail mode
5/31/2000	341714.1.1	N7004RP-0-U-00-C	N7004 4-WIRE Pt 100	Upscale	None	10.5	2	2 ea. (0-100℃), 100W, 4-wire	Not affected - upscale fail mode
5/31/2000	341714.2.1	N7004RP-0-U-00-C	N7004 4-WIRE Pt 100	Upscale	None	10.5	1	1 ea. (0-60℃), 100W, 4-wire	Not affected - upscale fail mode

PROJECT: NRU - CHALK RIVER

Shipped	SOIR	Configuration	Model	Fail Mode	Hsg.	Age(yr)	QTY	Application Notes	Product Quality Advisory based on factory settings
2/18/2000	341000.1.1	N7004>RP-0U00S	N7004 4-WIRE Pt 100	Upscale	None	10.8	4	4 ea. (0-100℃), 100W, 4-wire	Not affected - upscale fail mode

Weed Instrument N7000 Series Transmitters

BALTIMORE GAS AND ELECTRIC

PROJECT: CALVERT CLIFFS

Shipped	SOIR	Configuration	Model	Fail Mode	Hsg.	Age(yr)	QTY	Application Notes	Product Quality Advisory based on factory settings
10/9/1995	322925.3.1	N7000>RW-0-U-10-S	N7004 4-WIRE Pt 200	Upscale	Ex	15.2	2	2 ea. (0-100°F), 200W, 4-wire	Not affected - upscale fail mode
10/9/1995	322925.2.1	N7000>RW-0-U-10-S	N7004 4-WIRE Pt 200	Upscale	Ex	15.2	4	4 ea. (0-100°F), 200W, 4-wire	Not affected - upscale fail mode

Weed Instrument N7000 Series Transmitters

CENTERIOR SERVICE COMPANY

PROJECT: PERRY NUCLEAR

Shipped	SOIR	Configuration	Model	Fail Mode	Hsg.	Age(yr)	QTY	Application Notes	Product Quality Advisory based on factory settings
9/2/1998	335469.1.1	N7003RP>0U10S	N7003 3-WIRE Pt 100	Upscale	Ex	12.3	2	2 ea. (32-212°F), 100W, 3-wire	Not affected - upscale fail mode

Weed Instrument N7000 Series Transmitters

COMISION FEDERAL DE ELECT

PROJECT: LAGUNA VERDE

Shipped	SOIR	Configuration	Model	Fail Mode	Hsg.	Age(yr)	QTY	Application Notes	Product Quality Advisory based on factory settings
6/30/1997	330196.1.1	N7004>RP0U10S	N7004 4-WIRE Pt 100	Upscale	Ex	13.4	2	2 ea. (0-500°F), 100W, 4-wire	Not affected - upscale fail mode

Weed Instrument N7000 Series Transmitters

DOMINION

PROJECT: NORTH ANNA

Shipped	SOIR	Configuration	Model	Fail Mode	Hsg.	Age(yr)	QTY	Application Notes	Product Quality Advisory based on factory settings
9/27/2006	366184.1.1	N7013RW0D00S(0-700F)	N7013 3-WIRE Pt 200	Downscale	None	4.2	4	4 ea. (0-700°F), 200Ω, 3-wire, EMI mods., 3.4KΩ resistor from pin 2 to pin 3 of RP3, Zero Jumpers - 11010, Lin. Jumpers - 1110010100, Span Jumpers - 11000	May not be affected due to range
9/30/2010	385276.1.1	N7013RW0D00S(0-700F)	N7013 3-WIRE Pt 200	Downscale	None	0.2	2	2 ea. (0-700°F), 200W, 3-wire, EMI mods., 3.4KΩ resistor from pin 2 to pin 3 of RP3, Zero Jumpers - 11010, Lin. Jumpers - 1110010100, Span Jumpers - 11000	May not be affected due to range

PROJECT: SURRY

Shipped	SOIR	Configuration	Model	Fail Mode	Hsg.	Age(yr)	QTY	Application Notes	Product Quality Advisory based on factory settings
9/27/2006	366182.1.1	N7013RW0D00S (0-700F)	N7013 3-WIRE Pt 200	Downscale	None	4.2	2	2 ea. (0-700°F), 200Ω, 3-wire, EMI mods., 3.4KΩ resistor from pin 2 to pin 3 of RP3, Zero Jumpers - 11010, Lin. Jumpers - 1110010100, Span Jumpers - 11000	May not be affected due to range

Weed Instrument N7000 Series Transmitters

ENTERGY OPERATIONS INC

PROJECT: ARKANSAS NUCLEAR ONE

Shipped	SOIR	Configuration	Model	Fail Mode	Hsg.	Age(yr)	QTY	Application Notes	Product Quality Advisory based on factory settings
7/13/1995	322171.3.1	N7000-RP-0-D	N7004 4-WIRE Pt 100	Downscale	None	15.4	45	21 ea. (525-675°F). 100Ω, 4-wire 9 ea. (465-615°F). 100Ω, 4-wire 9 ea. (150-750°F). 100Ω, 4-wire 3 ea. (0-600°F). 100Ω, 4-wire 2 ea. (525-625°F). 100Ω, 4-wire 1 ea. (100-500°F). 100Ω, 4-wire	Affected
10/4/1995	902407.1.1	N7000-RP-0-D	N7004 4-WIRE Pt 100	Downscale	None	15.2	3	1 ea. (525-675°F)), 100Ω, 4-wire 1 ea. (465-615°F)), 100Ω, 4-wire 1 ea. (0-600°F), 100Ω, 4-wire	Affected

PROJECT: WATERFORD #3

Shipped	SOIR	Configuration	Model	Fail Mode	Hsg.	Age(yr)	QTY	Application Notes	Product Quality Advisory based on factory settings
10/23/200	343694.1.1	N7004>RW-0U00S	N7004 4-WIRE Pt 200	Upscale	None	10.1	3	3 ea. (525-675°F), 200W, 4 wire	Not affected - upscale fail mode

PROJECT: WATERFORD 3

Shipped	SOIR	Configuration	Model	Fail Mode	Hsg.	Age(yr)	QTY	Application Notes	Product Quality Advisory based on factory settings
11/30/199	335951.1.1	N7004>RW-0-D-00-S	N7004 4-WIRE Pt 200	Downscale	None	12.0	5	5 ea. (465-615°F), 200W, 4-wire	Affected
11/30/199	335951.4.1	N7004>RW-0-U-00-S	N7004 4-WIRE Pt 200	Upscale	None	12.0	5	5 ea. (525-675°F), 200W, 4-wire	Not affected - upscale fail mode

FRAMATOME ANP INC

PROJECT: FRAMATOME ANP

Shipped	SOIR	Configuration	Model	Fail Mode	Hsg.	Age(yr)	QTY	Application Notes	Product Quality Advisory based on factory settings
2/16/2005	359592.1.1	N7004>RP-0-D-00-S-SP	N7014 4-WIRE Pt 100	Downscale	None	5.8	3	3 ea. (520-620°F), 100W, 4 wire, EMI mods.	Affected
2/14/2006	359592.4.1	N7014>RP-0-D-00-S-SP	N7014 4-WIRE Pt 100	Downscale	None	4.8	11	11 ea. (520-620°F), 100W, 4 wire, EMI mods.	Affected
2/28/2006	359592.4.3	N7014>RP-0-D-00-S-SP	N7014 4-WIRE Pt 100	Downscale	None	4.8	7	7 ea. (520-620°F), 100W, 4 wire, EMI mods.	Affected
2/28/2006	359592.4.2	N7014>RP-0-D-00-S-SP	N7014 4-WIRE Pt 100	Downscale	None	4.8	6	8 ea. (520-620°F), 100W, 4 wire, EMI mods.	Affected
3/17/2006	359592.7.1	N7004>RP-O-D-00-S-SP	N7014 4-WIRE Pt 100	Downscale	None	4.7	1	1 ea. (520-620°F), 100W, 4 wire, EMI mods.	Affected

Weed Instrument N7000 Series Transmitters

INVENSYS SYSTEMS INC

PROJECT: KEWAUNEE

Shipped	SOIR	Configuration	Model	Fail Mode	Hsg.	Age(yr)	QTY	Application Notes	Product Quality Advisory based on factory settings
10/2/2006	367123.2.1	N7013RW-1U00S	N7013 3-WIRE Pt 200	Upscale	None	4.2	6	4 ea. (32-300°F), 200Ω, 3-wire, EMI mods. 2 ea. (50-700°F), 200Ω, 3-wire, EMI mods.	Not affected - upscale fail mode
10/2/2006	367123.1.1	N7013RP-1U003	N7013 3-WIRE Pt 100	Upscale	None	4.2	10	10 ea. (32-300°F), 100W, 3-wire, EMI mods.	Not affected - upscale fail mode

Weed Instrument N7000 Series Transmitters

KANATA ELECTRONIC SERVICE

PROJECT: CERNAVODA

Shipped	SOIR	Configuration	Model	Fail Mode	Hsg.	Age(yr)	QTY	Application Notes	Product Quality Advisory based on factory settings
7/21/2004	355444.1.1	N7003RP>-0-U-10-C	N7003 3-WIRE Pt 100	Upscale	Ex	6.4	5	5 ea. (0-100°C), 100W, 3 wire	Not affected - upscale fail mode

PROJECT: CNE-PROD CERNAVODA

Shipped	SOIR	Configuration	Model	Fail Mode	Hsg.	Age(yr)	QTY	Application Notes	Product Quality Advisory based on factory settings
5/19/2008	373572.1.1	MODEL N7013RP-0-U-10	N7013 3-WIRE Pt 100	Upscale	Ex	2.5	4	4 ea. (0-100°C), 100W, 3-wire, EMI mods	Not affected - upscale fail mode

Weed Instrument N7000 Series Transmitters

NUCLEAR LOGISTICS INC

PROJECT: NLI

Shipped	SOIR	Configuration	Model	Fail Mode	Hsg.	Age(yr)	QTY	Application Notes	Product Quality Advisory based on factory settings
1/18/2006	363508.1.1	N7003-RP-0-U-00-S	N7003 3-WIRE Pt 100	Upscale	None	4.9	7	7 ea. (32-70°F), 100W, 3-wire	Not affected - upscale fail mode

Weed Instrument N7000 Series Transmitters

PACIFIC GAS & ELECTRIC

PROJECT: DIABLO CANYON

Shipped	SOIR	Configuration	Model	Fail Mode	Hsg.	Age(yr)	QTY	Application Notes	Product Quality Advisory based on factory settings
3/13/2009	378839.1.1	N7014>RW0D00S(510-63	N7014 4-WIRE Pt 200	Downscale	None	1.7	1	1 ea. (510-630°F), 200W, 4-wire mods, EMI mods	Affected

Weed Instrument N7000 Series Transmitters

PGS ENRIQUE MARIA HIERRO

PROJECT: VANDELLOS II

Shipped	SOIR	Configuration	Model	Fail Mode	Hsg.	Age(yr)	QTY	Application Notes	Product Quality Advisory based on factory settings
5/1/2009	379182.1.1	N7013-RP-U-00-D	N7013 3-WIRE Pt 100	Upscale	None	1.6	27	6 ea. (0-60℃), 100Ω, 3-wire, EMI mods 10 ea. (0-150℃), 100Ω, 3-wire, EMI mods 6 ea. (0-250℃), 100Ω, 3-wire, EMI mods 5 ea. no cal range, 100Ω, 3-wire, EMI mods	Not affected - upscale fail mode

Weed Instrument N7000 Series Transmitters

PUBLIC SERVICE ELECTRIC &

PROJECT: HOPE CREEK

Shipped	SOIR	Configuration	Model	Fail Mode	Hsg.	Age(yr)	QTY	Application Notes	Product Quality Advisory based on factory settings
11/30/200	371566.1.1	N7013-RP-O-U-00-S	N7013 3-WIRE Pt 100	Upscale	None	3.0	1	1 ea. (32-70°F), 100W, 3-wire, EMI mods.	Not affected - upscale fail mode

Weed Instrument N7000 Series Transmitters

SIHI PUMPS LTD

PROJECT: WOLSONG

Shipped	SOIR	Configuration	Model	Fail Mode	Hsg.	Age(yr)	QTY	Application Notes	Product Quality Advisory based on factory settings
8/22/1996	324560.4.1	N7003RP-O-D-10-S	N7003 3-WIRE Pt 100	Downscale	Ex	14.3	6	6 ea. (50-145°F), 100W, 3-wire	Affected
8/22/1996	324560.5.1	N7003RP-O-D-10-S	N7003 3-WIRE Pt 100	Downscale	Ex	14.3	6	6 ea. (50-145°F), 100W, 3-wire	Affected
10/9/1998	904556.1.1	N7003RP>-0-D-10-S	N7003 3-WIRE Pt 100	Downscale	Ex	12.2	1	1 ea. (50-145°F), 100W, 3-wire	Affected

Weed Instrument N7000 Series Transmitters

WESTINGHOUSE ELECTRIC CO

PROJECT: Evaluation Unit

Shipped	SOIR	Configuration	Model	Fail Mode	Hsg.	Age(yr)	QTY	Application Notes	Product Quality Advisory based on factory settings
8/17/2006	366946.1.1	N7014RW-0-U-00	N7014 4-WIRE Pt 200	Upscale	None	4.3	1	1 ea. (250-350℃), 200W, 4-wire, EMI mods.	Not affected - upscale fail mode

PROJECT: RINGHALS

Shipped	SOIR	Configuration	Model	Fail Mode	Hsg.	Age(yr)	QTY	Application Notes	Product Quality Advisory based on factory settings
2/21/2007	369019.2.1	N7014>RW-O-U-00-C-D	N7014 4-WIRE Pt 200	Upscale	None	3.8	11	11 ea. (0-370℃), 200W, EMI mods, 4-wire mods per 0502-200-0002T	Not affected - upscale fail mode
3/12/2007	369019.1.1	N7014>RW-0-U-00-C-D	N7014 4-WIRE Pt 200	Upscale	None	3.7	19	19 ea. (271.1-344.5℃), 200W, EMI mods, 4-wire mods per 0502-200-0001T	Not affected - upscale fail mode

PROJECT: RINGHALS 2

Shipped	SOIR	Configuration	Model	Fail Mode	Hsg.	Age(yr)	QTY	Application Notes	Product Quality Advisory based on factory settings
10/13/200	376689.1.1	N7014RW-0-U-00-C-D	N7014 4-WIRE Pt 200	Upscale	None	2.1	2	2 ea. (0-370℃), 200W, EMI mods, 4-wire mods per 0502-200-0002T	Not affected - upscale fail mode
12/11/200	376790.1.1	N7014RW-0-U-00-C-D	N7014 4-WIRE Pt 200	Upscale	None	2.0	3	3 ea. (271.1-344.5℃), 200W, EMI mods, 4-wire mods per 0502-200-0001T	Not affected - upscale fail mode

PROJECT: TEST UNITS FOR RINGHALS

Shipped	SOIR	Configuration	Model	Fail Mode	Hsg.	Age(yr)	QTY	Application Notes	Product Quality Advisory based on factory settings
9/29/2006	367516.1.1	N7014>RW-0-U-00-C	N7014 4-WIRE Pt 200	Upscale	None	4.2	4	2 ea. (250-350℉), 200Ω 2 ea. (0-370℉), 200Ω4-wire, EMI mods per 0003-400-0045. For 250-350° transmitters 3.4KΩ resistor from pin 2 to pin 3 of RP3, Zero Jumpers - 11010, Lin. Jumpers - 1110010100, Span Jumpers - 11000	Not affected - upscale fail mode
12/11/200	367516.5.1	N7014>RW-0-U-00-C	N7014 4-WIRE Pt 200	Upscale	None	4.0	2	1 ea. (250-350℉), 200Ω 1 ea. (0-370℉), 200Ω4-wire, EMI mods per 0003-400-0045. For 250-350° transmitters 3.4KΩ resistor from pin 2 to pin 3 of RP3, Zero Jumpers - 11010, Lin. Jumpers - 1110010100, Span Jumpers - 11000	Not affected - upscale fail mode
2/6/2007	907482.2.1	N7014>RW-0-U-00-C	N7014 4-WIRE Pt 200	Upscale	None	3.8	2	1 ea. (250-350℉), 200Ω 1 ea. (0-370℉), 200Ω4-wire, EMI mods per 0003-400-0045. For 250-350° transmitters 3.4KΩ resistor from pin 2 to pin 3 of RP3, Zero Jumpers - 11010, Lin. Jumpers - 1110010100, Span Jumpers - 11000	Not affected - upscale fail mode