QSA Global, Inc.
40 North Avenue
Burlington, MA 01803
Telephone: (781) 272-2000
Toll Free: (800) 815-1383
Facsimile: (781) 273-2216

22 November 2010

Mr. Eric Benner, Chief
Division of Spent Fuel Storage and Transportation
Office of Nuclear Material Safety and Safeguards
U.S. Nuclear Regulatory Commission
11555 Rockville Pike, Mailstop: EBB-3D-02M
Rockville, MD 20852

RE: USA/9296/B(U)-96 (Current Revision 7)

Dear Mr. Benner:

QSA Global, Inc. requests renewal and amendment of the certificate referenced above for the Model 880 Series Type B(U) containers. In addition to renewal, this submission adds a new version of the optional handling jacket. All test documentation and justification information for this new configuration has been included in the revised SAR.

This submission is being made as an amendment in entirety replacing all previously submitted documentation in support of this approval. The submission is intended to allow for new production as well as manufacture of replacement parts for existing packages in need of maintenance and/or repair. Enclosed with this letter is Revision 7 of the SAR, complete with all reference appendices and with updated descriptive drawings. This revision of the SAR has been formatted to comply with the recommended guidance in NUREG 1886 (Final -- March 2009). Changes from Revision 6 to Revision 7 of the SAR are detailed in an enclosed SAR revision change table titled "Revision Description for the Model 880 Series SAR from Revision 6 to Revision 7". This package will be submitted to the Canadian Nuclear Safety Commission to allow Type B transport in Canada after obtaining USNRC and USDOT approval for Type B transport.

Changes in the enclosed drawings are described in a table included with this letter titled "Summary Table of Changes to Model 880 Series Drawings". (This table includes changes from drawing R88000 Rev L to Rev M and a new descriptive drawing R88095 Rev A.)

At this time there are no further changes or modifications necessary to this Type B approval. Should you have any additional questions or wish to discuss this submission after receipt please feel free to contact me.

Sincerely,

Lori Podolak
Senior Regulatory Affairs Specialist
Regulatory Affairs Department
Ph: (781) 505-8241
Fax: (781) 359-9191
Email: Lori.Podolak@qsa-global.com

RA/QA Approval — Date: 22 Nov 10

Engineering Approval — Date: 19 Nov 10

Enclosures: (1-Hard Copy Original and 6 CDs to the letter cc, each CD containing copies of the following Files):

- Revision Description for the Model 880 Series SAR from Revision 6 to Revision 7
- Summary Table of Changes to Model 880 Series Drawings
- List of Affected Pages
- 880 Series SAR Revision 7

cc: ATTN: Document Control Desk
Spent Fuel Project Office
Office of Nuclear Material Safety and Safeguards
U.S. Nuclear Regulatory Commission
11555 Rockville Pike
One White Flint
Rockville, MD 20852

Revision 7 to the 880 Series SAR reformats the SAR in accordance with the recommendations in NUREG 1886, *"Joint Canada – United States Guide for Approval of Type B(U) and Fissile Material Transportation Packages"* (Final Report – March 2009) . Other than generic format revisions, SAR changes are listed under the SAR Section in Revision 7 where the change occurs.

Additional minor formatting/correction changes were made if identified during the revision of this SAR as well as some content modifications based on discussions with NRC licensing staff on similar package approval reviews. Other than generic format revisions, these changes are listed under the SAR Section in Revision 7 where the change occurs.

Section Location	Summary Change	Change Reported Pursuant to 71.95	Impact of Change on Units Previously or Currently in Use under the Certificate	Action Taken By QSA Regarding Affected Units
Generic Format Changes	• Minor grammatical changes were made throughout the document to improve readability. • References to AEA Technology replaced with QSA Global, Inc. where applicable. • Table pagination and added reference to new appendices in Section 2.12. • References to IAEA Regulations for the Safe Transport of Radioactive Material 1996 Edition (Revised) No. TS-R-1 (ST-1, Revised) changed to read "IAEA Regulations for the Safe Transport of Radioactive Material No. TS-R-1 (ST-1, Revised) 1996 Edition (Revised). • Section Reference changes based on SAR reformatting to comply with guidance in NUREG 1886. • Removed regulatory section references under the SAR section headers. This information is not required under the recommended NUREG document.	No	Administrative/formatting change only. Such modifications do not change the original intent of the sections affected. No impact on package performance.	None. Not applicable.
1.1	Statement added to indicate that this SAR is formatted in accordance with NUREG-1886 "Joint Canada – United States Guide for Approval of Type B(U) and Fissile Material Transportation Packages" dated March 2009.	No	Change added for completeness, no impact on the package integrity or transport compliance.	None. Not applicable.

Section Location	Summary Change	Change Reported Pursuant to 71.95	Impact of Change on Units Previously or Currently in Use under the Certificate	Action Taken By QSA Regarding Affected Units
1.1 2.1.2 2.1.4	References to Canadian Nuclear Safety Commission PTNS Regulations SOR/2000-208 added.	No	Change added for completeness, no impact on the package integrity or transport compliance.	None. Not applicable.
1.2	Clarified that the 880 versions covered under the package description apply to those versions intended for Type B quantity transport. (There are additional versions of this container only approved for transport of Type A quantities of radioactive material.)	No	Change made for completeness only. No impact on package integrity or transport compliance.	None. Not applicable.
1.2, 1.2.1 & 1.2.1.5	Added reference to a second version of the optional package jacket for new configuration added with this revision of the SAR and corrected method of jacket attachment (e.g., screws not rivets).	No	Change is pending and has not been implemented for Transport yet.	None. Not applicable.
1.2.1.3	Added reference to thread lubricant and loctite for applicable screws.	No	Change made for completeness only. No impact on package integrity or transport compliance.	None. Not applicable.
1.2, 1.2.2 & Table 1.2.B	Added reference to the weight of the package contents and brief description.	No	Change made for completeness only. No impact on package integrity or transport compliance.	None. Not applicable.
Figure 1.2.A	Title revised to clarify that jacket shown in figure is Version 1 of the jacket since there are now two version of the optional jacket included for use with this package design.	No	Change made for clarity only. No impact on package integrity or transport compliance.	None. Not applicable.
Table 1.2A	Revised Maximum DU Weights for the 880 Delta and 880 Sigma based on current configurations approved under drawing R88000 Rev L. Also added Maximum package weights for 880 Style packages using Version 2 of the optional jacket.	No	Change made for clarity only. No impact on package integrity or transport compliance.	None. Not applicable.
1.2.1.2	Made reference to label attachment more generic (changed from riveted to "attached").	No	No impact on package integrity or transport compliance.	None. Not applicable.
1.2.1.6	Moved some information related to the containment system from Section 1.2.2 or Revision 6 of the SAR into this new section in Revision 7 due to reformatting to NUREG 1886.	No	No change in information made, only moved in SAR.	None. Not applicable.

Section Location	Summary Change	Change Reported Pursuant to 71.95	Impact of Change on Units Previously or Currently in Use under the Certificate	Action Taken By QSA Regarding Affected Units
1.2.3	Section added per NUREG 1886.	No	No impact on package. Package is not used for transport of plutonium.	None. Not applicable.
1.2.4	Section revised to reference Section 7 for container assembly and securing.	No	No change to package construction or design. Notation change added for clarity only.	None. Not applicable.
1.3	Section revised to include figures of the package as assembled for transport per NUREG 1886.	No	Change added for completeness and from discussions with NRC licensing staff. No impact on the package integrity or transport compliance.	None. Not applicable.
1.3	Appendix drawings updated to reflect revisions to drawing R88000 and additional drawings for the package using Version 2 of the optional jacket assembly.	See Summary Table of Changes to Drawings for a detailed evaluation of the impact of changes made to the Model package drawings.		
2.1.3	Maximum weight of package updated based on package when assembled with Version 2 of the optional jacket.	No	Change is pending and has not been implemented for Transport yet.	None. Not applicable.
2.1.4	Subsections combined and consolidated. Criteria for hardware and welding requirements noted specifically as referenced on drawings in Section 1.3. Removed reference to welding in accordance with ASME standards. Current and past welding has been evaluated for compliance to AWS as noted on drawing R88000.	No	Such modifications do not change the original intent of the sections affected.	None. Not applicable.
2.2.1	Updated Table 2.2.A to include multiple variations of steel and materials used in the package construction.	No	Change added for completeness and from discussions with NRC licensing staff. No impact on the package integrity or transport compliance.	None. Not applicable.
2.2.2	Revised section wording slightly without losing original intent.	No.	No change to package construction or design. Notation change added for clarity only.	None. Not applicable.

Section Location	Summary Change	Change Reported Pursuant to 71.95	Impact of Change on Units Previously or Currently in Use under the Certificate	Action Taken By QSA Regarding Affected Units
2.3.1	Statement added to section to indicate that the QSA Global QA program is based on the application of guidance contained in NUREG/CR-6407 regarding component safety classification.	No	Change added for completeness and from discussions with NRC licensing staff. No impact on the package integrity or transport compliance.	None. Not applicable.
2.4.1	Added clarification that dimensions listed were the smallest overall package dimensions (since larger dimensions are possible when the optional jackets are used).	No	No change to package construction or design. Notation change added for clarity only.	None. Not applicable.
2.5.1 & 2.5.2	Added reference to test plan associated with testing of the Version 2 jacket for compliance.	No	Addition of Version 2 jacket is pending and has not been implemented for Transport yet.	None. Not applicable.
2.6.1	Added detail regarding impact of source content on thermal surface temperature of package based on current calculations.	No	No change to package construction or design. Notation change added for clarity only.	None. Not applicable.
2.6.1.1	Corrected insolation value based on calculation performed in Section 3.4.1.1.	No	No change to package construction or design. Notation change added for clarity only.	None. Not applicable.
2.6.1.2	Corrected calculations to reflect temperature values from Table 2.6.A for insolation. Also corrected typographical error in manufacturing tolerance value and added reference to section.	No	No change to package construction or design. Notation change added for clarity only.	None. Not applicable.
2.6.1.3	The calculation was corrected to reflect increase in maximum package weight from 54 lbs to 55 lbs based on Version 2 jacket.	No	Addition of Version 2 jacket is pending and has not been implemented for Transport yet.	None. Not applicable.
2.6.7	Added detail and references related to testing performed on the package when using Version 2 of the optional jacket.	No	Addition of Version 2 jacket is pending and has not been implemented for Transport yet.	None. Not applicable.
2.6.10	Added Figure 2.6.A to show orientation of the test specimen during the penetration test.	No	Addition of Version 2 jacket is pending and has not been implemented for Transport yet.	None. Not applicable.

Section Location	Summary Change	Change Reported Pursuant to 71.95	Impact of Change on Units Previously or Currently in Use under the Certificate	Action Taken By QSA Regarding Affected Units
2.7	Additional description added per NUREG 1886 regarding sequence of hypothetical accident condition testing performed equaling the order believed to be potentially the most damaging to the package design.	No	No impact on the package integrity or transport compliance. Potentially most damaging test sequence used for performance testing is the same as the sequence in 10 CFR 71 requirements.	None. Not applicable.
2.7, 2.7.1.1, 2.7.3, 2.7.3.3 & 2.7.3.4	Added detail related to the testing performed for the Version 2 jacket configuration.	No	Addition of Version 2 jacket is pending and has not been implemented for Transport yet.	None. Not applicable.
2.7.1.1& 2.7.3.3	Updated Figures to show drop orientations for package using Version 2 jacket configuration.	No	Addition of Version 2 jacket is pending and has not been implemented for Transport yet.	None. Not applicable.
2.7.1.4	Clarified wording related to energy generation during oblique drop and added reference to Test Plan 186 for Version 2 Jacket.	No	Change made for clarity. Addition of Version 2 jacket is pending and has not been implemented for Transport yet.	None. Not applicable.
2.7.3.2	Added justification for the package related to an oblique puncture drop orientation per NUREG 1886.	No	No change to package construction or design. Notation change administrative only.	None. Not applicable.
2.7.4	Added detail related to the inability to cause shield oxidation as further justification for container compliance to the test requirements of this section.	No	No change to package construction or design. Notation change administrative only.	None. Not applicable.
2.7.4.1	Added reference to Tables 3.1.A and 3.1.B for summary of temperatures and pressures related to this package.	No	No change to package construction or design. Notation change administrative only.	None. Not applicable.
2.7.4.2	Corrected typographical errors in display of temperatures and reference to shell weldment in this section.	No	No change to package construction or design. Notation change administrative only.	None. Not applicable.
2.7.4.3 & 2.7.4.4	Added reference to new Section 2.7.4.5 for additional considerations related to stress calculations and container compliance.	No	No change to package construction or design. Notation change administrative only.	None. Not applicable.

Section Location	Summary Change	Change Reported Pursuant to 71.95	Impact of Change on Units Previously or Currently in Use under the Certificate	Action Taken By QSA Regarding Affected Units
2.7.4.5	Added section to incorporate additional evaluation and compliance assessments related to the thermal analysis. This information had previously been contained in Section 2.7.4.1 or Revision 6 to the 880 Series SAR. Section calculations also updated to reflect maximum shield weight of 34.4 lbs and test references related to Version 2 of the jacket where applicable.	No	No change to package construction or design. Information location change administrative only.	None. Not applicable.
2.7.6	Clarified that capsules transported in these packages will "minimally" meet the Class 3 pressure test criteria from ANSI N43.6 and ISO 2919	No	No change to package construction or design. Notation change administrative only.	None. Not applicable.
2.7.8	Revised to include consolidated previous tables from this section into a single table. Also updated the table summary to include test specimen information related to the Version 2 jacket testing.	No	Change made for clarity. Addition of Version 2 jacket is pending and has not been implemented for Transport yet.	None. Not applicable.
2.8	Section revised based on expanded scope covered under NUREG 1886.	No	No impact on the package integrity or transport compliance.	None. Not applicable.
2.10	Reference to DOT certification added for more details of special form capsules as part of Table 2.10.A.	No	No impact on the package integrity or transport compliance.	None. Not applicable.
2.12	Added appendix references for test documentation related to the Version 2 jacket testing as well as special form certificate references.	No	Change made for clarity. Addition of Version 2 jacket is pending and has not been implemented for Transport yet.	None. Not applicable.
3.1 & 3.1.2	Maximum content activity and associated worst case decay heat energy information deleted from this section. This information was moved to Section 3.1.2.	No	No impact on the package integrity or transport compliance.	None. Not applicable.
Table 3.1.A	Consolidated last two table entries into a single entry and corrected conversion for Fahrenheit temperatures related to decay heating entry.	No	No change to package construction or design. Notation change added for clarity only.	None. Not applicable.

Section Location	Summary Change	Change Reported Pursuant to 71.95	Impact of Change on Units Previously or Currently in Use under the Certificate	Action Taken By QSA Regarding Affected Units
3.1.4	Revised summary section for Maximum Pressures.	No	No change to package construction or design. Notation change administrative only.	None. Not applicable.
Table 3.1.B	Consolidated table entries into a single entry.	No	No change to package construction or design. Notation change added for clarity only.	None. Not applicable.
Table 3.2.A	Revised table to reflect melting/combustion values for 304 L and added notation to table to indicate values for thermal expansion are temperature dependent.	No	No change to package construction or design. Change added for completeness and from discussions with NRC licensing staff.	None. Not applicable.
3.3.2	Added notation that test evaluation are either described in the referenced Test Plans in Appendix 2.12 or in applicable sections of the SAR.	No	No change to package construction or design. Notation change added for clarity only.	None. Not applicable.
Section 3.3.3 of SAR Rev 6	Section removed.	No	Section not covered under NUREG 1886. Information previously contained in this removed section is addressed elsewhere as parts of package justifications throughout the SAR.	None. Not applicable.
3.4.1.1	Added reference to Table XI of IAEA TS-R-1. Also minor revision to calculated value for Q_{IC}. This change had no impact on resultant calculated maximum surface temperature of the package. Added further compliance justification.	No	No change to package construction or design. Notation change administrative only.	None. Not applicable.
3.4.1.2	Corrected conversion for Fahrenheit temperature related to maximum wall temperature of the package.	No	No change to package construction or design. Notation change added for clarity only.	None. Not applicable.
3.4.1.4	Added section to retain information related to the source capsule thermal analysis contained in Revision 6 of the SAR since this information is not specifically included under the NUREG 1886 format.	No	No change to package construction or design. Notation change added for clarity only.	None. Not applicable.

Section Location	Summary Change	Change Reported Pursuant to 71.95	Impact of Change on Units Previously or Currently in Use under the Certificate	Action Taken By QSA Regarding Affected Units
3.5.1	Corrected table reference.	No	No change to package construction or design. Notation change administrative only.	None. Not applicable.
3.5.2	Corrected reference for documentation associated with the thermal analysis for the Model 865 which is used as part of the thermal justification for this package design.	No	No change to package construction or design. Notation change administrative only.	None. Not applicable.
3.5.3	Added a section cross reference.	No	No change to package construction or design. Notation change administrative only.	None. Not applicable.
3.5.4, 3.5.5 & 4.1.1	Added sections per NUREG 1886 format guidance.	No	No change to package construction or design. Notation change administrative only.	None. Not applicable.
4.2	Section information reformatted per NUREG 1886 and justification related to normal conditions of transport containment re-worded.	No	No change to package construction or design. Notation change administrative only.	None. Not applicable.
4.4	Justification related to hypothetical accident condition of transport containment re-worded.	No	No change to package construction or design. Notation change administrative only.	None. Not applicable.
5.1.2 & Section Tables	Section radiation profile tables modified to reflect format of NUREG-1886. Clarified for Tables 5.1.A & 5.1.B that results are based on worst case profile results from testing.	No	No change to package construction or design. Addition of Version 2 jacket is pending and has not been implemented for Transport yet.	None. Not applicable.
Section 5 Tables	Footnotes updated for consistency and clarity.	No	No change to package construction or design. Notation change administrative only.	None. Not applicable.
5.3.1 & 5.3.2	Added additional justification for compliance for radionuclides other than Ir-192 based on relative dose rate changes noted in profile results when loaded with Ir-192.	No	No change to package construction or design. Notation change administrative only.	None. Not applicable.
5.4.2	Correct activity reference levels in section based on values shown in equation.	No	No change to package construction or design. Notation change administrative only.	None. Not applicable.

Section Location	Summary Change	Change Reported Pursuant to 71.95	Impact of Change on Units Previously or Currently in Use under the Certificate	Action Taken By QSA Regarding Affected Units
7.1.1	Replaced reference to loading and closure of package to "equivalent procedures" with procedures that minimally include the requirements of this Section of the SAR.	No	No change to package construction or design. Notation change added for clarity only based on similar submission reviews with the NRC.	None. Not applicable.
7.1.1.1	Description of package contents describe and Table updated to correct maximum shield weights for the Models 880 Delta and 880 Sigma devices and to include details on containers using the Version 2 jacket.	No	No impact on the package integrity or transport compliance.	None. Not applicable.
7.1.1.2	Added/revised steps as follows: • Added inspection of container for signs of significant degradation. • Added inspection of assembly hardware for fitness of use including checks for signs of fatigue cracking. • Revised to reference material and assembly component requirements per descriptive drawings referenced on the Type B transport certificate instead of generic reference to descriptive assembly drawings (Type B transport certificate will include the current descriptive assembly drawings by drawing title and revision level.	No	Changes made for completeness and accuracy, and in some cases in response to discussions with NRC licensing staff on similar package approval reviews. No impact on the package integrity or transport compliance.	None. Not applicable.
7.1.2.1.c	Revised section to reference loading in accordance with applicable license requirements for the package users facility.	No	No change to package construction or design. Notation change administrative only.	None. Not applicable.
7.1.3.4	Added reference to 10 CFR 71.5 in addition to 40 CFR regulations which it incorporates by reference in the regulations.	No	Change made for completeness and accuracy. No impact on the package integrity or transport compliance.	None. Not applicable.
7.3.5	Replaced reference to 49 CFR regulations with reference to 10 CFR 71.5 which incorporates compliance to 49 CFR regulations.	No	Change made for completeness and accuracy. No impact on the package integrity or transport compliance.	None. Not applicable.

Section Location	Summary Change	Change Reported Pursuant to 71.95	Impact of Change on Units Previously or Currently in Use under the Certificate	Action Taken By QSA Regarding Affected Units
7.4.1.3	Added requirement to ensure package is properly blocked and braced prior to shipment in conveyance.	No	No change to package construction or design. Notation change added for clarity only based on similar submission reviews with the NRC.	None. Not applicable.
7.4.2	Revision of Emergency Response Guidebook updated to 2008.	No	No change to package construction or design. Notation change administrative only.	None. Not applicable.
8.1.1.1.a & 8.1.1.3	Revised to reference drawings listed on the Type B transport certificate instead of generic reference to descriptive assembly drawings (Type B transport certificate will include the current descriptive assembly drawings by drawing title and revision level).	No	Change made for completeness and accuracy. No impact on the package integrity or transport compliance.	None. Not applicable.
8.1.6	Description of original shield evaluations expanded for consistency with other QSA Global, Inc. Type B SAR descriptions.	No	Changes made for completeness and in response to discussions with NRC licensing staff on similar package approval reviews. No impact on the package integrity or transport compliance.	None. Not applicable.
8.2.2	Reformatted activity limit to list as "185 Bq (0.005 μCi)".	No	No change to package construction or design. Notation change administrative only.	None. Not applicable.
Section 9	Previous Section 9 (regarding IAEA TS-R-1 1996 requirements) is deleted as no longer required based on SAR revisions. This section now includes information related to Quality Assurance in accordance with the guidance provided in NUREG 1886.	No	No impact on the package integrity or transport compliance.	None. Not applicable.

Summary Table of Changes to Drawings for the Model 880 Series Packages

Change Location	Summary Change	Change Reported Pursuant to 71.95	Impact of Change on Units Previously or Currently in Use under the Certificate	Action Taken By QSA Regarding Affected Units
Changes to Drawing R88000 from Rev L to Rev M				
Sheet 1, Rev M	Added reference to use of thread locker for the 5/16-18 security screws.	No	No change to package construction or design. Notation change added for clarity only. Test specimens used to demonstrate compliance to the normal and hypothetical accident transport conditions, and subsequent production units, were manufactured compliant to these criteria.	None. Not applicable.
Sheet 1, Rev M	Added physical properties table for the 18-8 SS used on the security screws.	No	No change to package construction or design. Change made to reflect current construction and for completeness and clarity only.	None. Not applicable.
Sheet 1, Rev M	Revised parts bill of material (BOM) to reference properties table for the 18-8 SS security screws and to change material of the source ID tag and transport label to stainless steel or steel.	No	The material for the ID tag and transport label are not important to maintaining the integrity of the transport package under normal or hypothetical accident conditions. The transport label material has been conditioned such that it is fire proof for visibility purposes after the hypothetical accident condition testing.	None. Not applicable.
Sheet 2, Rev M	Removed welding note from this page. A revised version of this note now appears on page 6 of this drawing.	No	No change to package construction or design. Notation change added for clarity only.	None. Not applicable.
Sheet 2, Rev M	Revised parts BOM to reference notes on sheet 6 for materials important to transport safety and to reference the shield pin material as 6AL-4V.	No	No change to package construction or design. Change made to reflect current construction and for completeness and clarity only.	None. Not applicable.
Sheet 3, Rev M	Added reference to use of locktite for the various lock assembly screws on the rear plate.	No	No change to package construction or design. Notation change added for clarity only. Test specimens used to demonstrate compliance to the normal and hypothetical accident transport conditions, and subsequent production units, were manufactured compliant to these criteria.	None. Not applicable.

Summary Table of Changes to Drawings for the Model 880 Series Packages

Change Location	Summary Change	Change Reported Pursuant to 71.95	Impact of Change on Units Previously or Currently in Use under the Certificate	Action Taken By QSA Regarding Affected Units
Sheet 3, Rev M	Corrected diagram call-outs to match parts listed in drawing BOM for some items on sheet.	No	No change to package construction or design. Change made to reflect current construction and for completeness and clarity only.	None. Not applicable.
Sheet 3, 4 & 5, Rev M	Revised parts BOM to reference generic material call-outs for components that are not important to transport safety and to reference notes on sheet 6 for components that are important to transport safety.	No	No change to package construction or design. Change made to reflect current construction and for completeness and clarity only.	None. Not applicable.
Sheet 6, Rev M	Sheet added to list notes applicable to the drawing which cover primarily welding and material requirements for the package.	No	No change to package construction or design. Change made to reflect current construction and for completeness and clarity only.	None. Not applicable.
New Drawing R88095 Rev A				
Drawing added to package approval to detail the construction and components related to Version 2 of the package optional jacket. It is noted on the drawing, and supported by physical testing, that all components shown on this drawing, except for the Model 880 device itself, are not important to maintaining the package integrity under normal and hypothetical accident transport conditions.				

List of Affected Pages	
Revision 1, 06 December 2000	Changes to the thermal analysis section and addition of Appendix E.
Revision 2, 10 January 2000	Drawing Changes Appendix A.
Revision 3, 09 August 2002	Revision in entirety to incorporate reference/justification for the Model 880 Sigma device. This revision supercedes previously submitted SAR's except for previously submitted Appendices B through E.
Revision 4, 15 October 2003	Drawing Changes Appendix A. Container weight references in sections 1 and 2 updated.
Revision 5, 28 October 2003	Revision H to drawing R88000. Updates to drawing revision level in SAR.
Revision 6, 20 October 2005	Revision I to drawing R88000 and reformatting of the SAR to cover compliance to IAEA TS-R-1 and NRC guidance format.
Revision 7, November 2010	SAR updated to reflect compliance to NUREG 1886 (Final Report – March 2009) and to incorporate a second version of the optional jacket.

Safety Analysis Report

QSA Global, Inc.

Model 880 Series
Type B(U) - 96
Transport Package

November 2010

Revision 7

Contents

SECTION 1 - GENERAL INFORMATION 1

1.1 INTRODUCTION 1
1.2 PACKAGE DESCRIPTION 1
1.2.1 Packaging 2
1.2.2 Contents 6
1.2.3 Special Requirements for Plutonium 6
1.2.4 Operational Features 7
1.3 APPENDIX 7

SECTION 2 - STRUCTURAL EVALUATION 1

2.1 DESCRIPTION OF STRUCTURAL DESIGN 1
2.1.1 Discussion 1
2.1.2 Design Criteria 1
2.1.3 Weight and Centers of Gravity 1
2.1.4 Identification of Codes and Standards for Package Design 1
2.2 MATERIALS 1
2.2.1 Material Properties and Specifications 1
2.2.2 Chemical, Galvanic or Other Reactions 2
2.2.3 Effects of Radiation on Materials 2
2.3 FABRICATION AND EXAMINATION 3
2.3.1 Fabrication 3
2.3.2 Examination 3
2.4 GENERAL REQUIREMENTS FOR ALL PACKAGES 3
2.4.1 Minimum Package Size 3
2.4.2 Tamper-Indicating Feature 3
2.4.3 Positive Closure 3
2.5 LIFTING AND TIEDOWN STANDARDS FOR ALL PACKAGES 4
2.5.1 Lifting Devices 4
2.5.2 Tie-Down Devices 4
2.6 NORMAL CONDITIONS OF TRANSPORT 4
2.6.1 Heat 4
2.6.2 Cold 6
2.6.3 Reduced External Pressure 6
2.6.4 Increased External Pressure 6
2.6.5 Vibration 6
2.6.6 Water Spray 7
2.6.7 Free Drop 7
2.6.8 Corner Drop 7
2.6.9 Compression or Stacking 7
2.6.10 Penetration 8
2.7 HYPOTHETICAL ACCIDENT CONDITIONS 8
2.7.1 Free Drop 9
2.7.2 Crush 12
2.7.3 Puncture 12
2.7.4 Thermal 16
2.7.5 Immersion - Fissile Material 22
2.7.6 Immersion - All Packages 22
2.7.7 Deep Water Immersion Test (for Type B Packages Containing More than 10^5 A_2) 22

2.7.8 Summary of Damage *22*
2.8 ACCIDENT CONDITIONS FOR AIR TRANSPORT OF PLUTONIUM OR PACKAGES WITH LARGE QUANTITIES OF RADIOACTIVITY 25
2.9 ACCIDENT CONDITIONS FOR FISSILE MATERIAL PACKAGES FOR AIR TRANSPORT 25
2.10 SPECIAL FORM 25
2.11 FUEL RODS 26
2.12 APPENDICES 26
2.12.1 Test Plan and Report 100 (Feb 2000) *27*
2.12.2 Test Plan 108 Issue 5 (Jul 2000) *28*
2.12.3 Test Report 108 Minus Appendices A-C (Aug 2000) *29*
2.12.4 Test Plan 115 (Feb 2001) *30*
2.12.5 Test Plan Report 115 Minus Appendices (March 2001) *31*
2.12.6 Test Plan Report 125 Rev B (Mar 2003) *32*
2.12.7 Test Plan Report 74 (Feb 1998) *33*
2.12.8 Test Plan 80 Rev 1 (Mar 1999) *34*
2.12.9 Test Plan 80 Report Minus Manufacturing Records (Jun 1999) *35*
2.12.10 Test Report #1 for Test Plan 188 Rev 1 (minus Sections 7.3 – 7.5) *36*
2.12.11 Test Report #1 for Test Plan 186 Rev 1 (minus Sections 8.4 & 8.5) *37*
2.12.12 USDOT Special Form Certificate USA/0392/S-96 Rev 10 ..... *38*
2.12.13 USDOT Special Form Certificate USA/0335/S-96 Rev 9 ..... *39*
2.12.14 USDOT Special Form Certificate USA/0502/S-96 Rev 7 ..... *40*

SECTION 3 - THERMAL EVALUATION 1

3.1 DESCRIPTION OF THERMAL DESIGN 1
3.1.1 Design Features *1*
3.1.2 Decay Heat of Contents *1*
3.1.3 Summary Tables of Temperatures *1*
3.1.4 Summary Tables of Maximum Pressures *1*
3.2 MATERIAL PROPERTIES AND COMPONENT SPECIFICATIONS 2
3.2.1 Material Properties *2*
3.2.2 Component Specifications *2*
3.3 GENERAL CONSIDERATIONS 3
3.3.1 Evaluation by Analysis *3*
3.3.2 Evaluation by Test *3*
3.4 THERMAL EVALUATION UNDER NORMAL CONDITIONS OF TRANSPORT 3
3.4.1 Heat and Cold *3*
3.4.2 Temperatures Resulting in Maximum Thermal Stresses *8*
3.4.3 Maximum Normal Operating Pressure *8*
3.5 THERMAL EVALUATION UNDER HYPOTHETICAL ACCIDENT CONDITIONS 9
3.5.1 Initial Conditions *9*
3.5.2 Fire Test Conditions *9*
3.5.3 Maximum Temperatures and Pressure *10*
3.5.4 Temperatures Resulting in Maximum Thermal Stresses *10*
3.5.5 Fuel/Cladding Temperatures for Spent Nuclear Fuel *10*
3.5.6 Accident Conditions for Fissile Material Packages for Air Transport *10*
3.6 APPENDIX 10

SECTION 4 – CONTAINMENT 1

4.1 DESCRIPTION OF THE CONTAINMENT SYSTEM 1
4.1.1 Special Requirements for Damaged Spent Nuclear Fuel *1*
4.2 CONTAINMENT UNDER NORMAL CONDITIONS OF TRANSPORT 1
4.3 CONTAINMENT UNDER HYPOTHETICAL ACCIDENT CONDITION 1
4.4 LEAKAGE RATE TESTS FOR TYPE B PACKAGES 1

4.5 APPENDIX 2

SECTION 5 - SHIELDING EVALUATION 1

5.1 DESCRIPTION OF SHIELDING DESIGN....1
5.1.1 Design Features....1
5.1.2 Summary Table of Maximum Radiation Levels 1
5.2 SOURCE SPECIFICATION 4
5.2.1 Gamma Source 4
5.2.2 Neutron Source 4
5.3 SHIELDING MODEL....4
5.3.1 Configuration of Source and Shielding 4
5.3.2 Material Properties 5
5.4 SHIELDING EVALUATION....5
5.4.1 Methods 5
5.4.2 Input and Output Data....5
5.4.3 Flux-to-Dose-Rate Conversion....7
5.4.4 External Radiation Levels....7
5.5 APPENDIX 7

SECTION 6 - CRITICALITY EVALUATION....1

SECTION 7 – PACKAGE OPERATIONS....1

7.1 PACKAGE LOADING....1
7.1.1 Preparation for Loading....1
7.1.2 Loading of Contents....2
7.1.3 Preparation for Transport 3
7.2 PACKAGE UNLOADING 3
7.2.1 Receipt of Package from Carrier....3
7.2.2 Receipt of Contents 4
7.3 PREPARATION OF EMPTY PACKAGE FOR TRANSPORT....4
7.4 OTHER OPERATIONS 5
7.4.1 Package Transportation By Consignor 5
7.4.2 Emergency Response 5
7.5 APPENDIX 5

SECTION 8 - ACCEPTANCE TESTS AND MAINTENANCE PROGRAM....1

8.1 ACCEPTANCE TEST 1
8.1.1 Visual Inspections and Measurements....1
8.1.2 Weld Examinations 1
8.1.3 Structural and Pressure Tests....1
8.1.4 Leakage Tests 2
8.1.5 Component and Material Tests....2
8.1.6 Shielding Tests....2
8.1.7 Thermal Tests 2
8.1.8 Miscellaneous Tests 2
8.2 MAINTENANCE PROGRAM....3
8.2.1 Structural and Pressure Tests....3
8.2.2 Leakage Tests 3
8.2.3 Component and Material Tests....3
8.2.4 Thermal Tests 3
8.2.5 Miscellaneous Tests 3
8.3 APPENDIX 3

SECTION 9 – QUALITY ASSURANCE **1**

9.1 U.S. QUALITY ASSURANCE PROGRAM REQUIREMENTS 1
9.2 CANADA QUALITY ASSURANCE PROGRAM REQUIREMENTS 1

List of Tables

TABLE 1.2A: MODEL 880 SERIES PACKAGE INFORMATION 1-2
TABLE 1.2.B: ISOTOPE INFORMATION PERMITTED IN THE MODEL 880 SERIES PACKAGES 1-6
TABLE 2.2.A: MECHANICAL PROPERTIES OF PRINCIPAL PACKAGE MATERIALS 2-2
TABLE 2.6.A: SUMMARY TEMPERATURES NORMAL TRANSPORT 2-5
TABLE 2.7.A: SUMMARY OF DAMAGES DURING TESTING 2-23
TABLE 2.10.A: TYPICAL SPECIAL FORM CAPSULE TRANSPORT INFORMATION 2-25
TABLE 3.1.A: SUMMARY TABLE OF TEMPERATURES 3-1
TABLE 3.1.B: SUMMARY TABLE OF MAXIMUM PRESSURES 3-2
TABLE 3.2.A: THERMAL PROPERTIES OF PRINCIPAL TRANSPORT PACKAGE MATERIALS 3-2
TABLE 3.4.A: INSOLATION DATA 3-5
TABLE 5.1.A: MODEL 880 DELTA SN TP186A SUMMARY TABLE OF EXTERNAL RADIATION LEVELS EXTRAPOLATED TO CAPACITY OF 150 CI IR-192 (NON-EXCLUSIVE USE) AND HYPOTHETICAL ACCIDENT TRANSPORT CONDITION TESTING[3] 5-1
TABLE 5.1.B: MODEL DELTA SN TP186A SUMMARY TABLE OF EXTERNAL RADIATION LEVELS EXTRAPOLATED TO CAPACITY OF 150 CI IR-192 (EXCLUSIVE USE)[1] 5-2
TABLE 5.1.C: MODEL 880 DELTA SN D2375 SUMMARY TABLE OF EXTERNAL RADIATION LEVELS EXTRAPOLATED TO CAPACITY OF 150 CI SE-75 (NON-EXCLUSIVE USE)[2] 5-3
TABLE 5.1.D: MODEL 880 ELITE SN E1060 SUMMARY TABLE OF EXTERNAL RADIATION LEVELS EXTRAPOLATED TO CAPACITY OF 150 CI SE-75 (NON-EXCLUSIVE USE)[2] 5-3
TABLE 7.1.A: ISOTOPES PERMITTED IN THE MODEL 880 SERIES 7-1

List of Figures

FIGURE 1.2.A – 880 PACKAGE WITH OPTIONAL JACKET (VERSION 1) 1-2
FIGURE 1.2.B - MODEL 880 TRANSPORT PACKAGE 1-3
FIGURE 1.3.A – SKETCH OF MODEL 880 WITHOUT OPTIONAL JACKET PREPARED FOR TRANSPORT 1-8
FIGURE 1.3.B – SKETCH OF MODEL 880 WITH OPTIONAL JACKET #1 PREPARED FOR TRANSPORT 1-8
FIGURE 1.3.C – SKETCH OF MODEL 880 WITH OPTIONAL JACKET #2 PREPARED FOR TRANSPORT 1-9
FIGURE 2.6.A – SPECIMEN P01 ORIENTATION FOR THE PENETRATION TEST 2-8
FIGURE 2.7.A - 9 M DROP TEST ORIENTATION – END DROP 2-9
FIGURE 2.7.B - MODEL 880 (TP108(C)) 9 M DROP TEST ORIENTATION – BOTTOM DROP 2-10
FIGURE 2.7.C - MODEL 880 (TP108(D)) 9 M DROP TEST ORIENTATION – LEFT SIDE DROP 2-11
FIGURE 2.7.D - MODEL 880 (TP108(C)) PUNCTURE DROP ORIENTATION – BOTTOM SURFACE 2-12
FIGURE 2.7.E - MODEL 880 (TP108(D)) PUNCTURE DROP ORIENTATION – LEFT SIDE SURFACE 2-13
FIGURE 2.7.F - MODEL 880 (TP108(B)) PUNCTURE DROP ORIENTATION – LOCK COVER 2-14
FIGURE 2.7.G - MODEL 880 (TP186(A) JACKET VERSION 2) PUNCTURE DROP ORIENTATION – LOCK COVER 2-15
FIGURE 2.7.H - MODEL 880 (TP186(B) JACKET VERSION 2) PUNCTURE DROP ORIENTATION – LOCK COVER 2-16
FIGURE 3.4.A: MODEL OF CYLINDRICAL PACKAGE FOR HEAT ANALYSIS 3-3
FIGURE 5.4.A. - SAMPLE SURFACE CORRECTION FACTOR DISTANCE CRITERIA 5-7

Section 1 - GENERAL INFORMATION

1.1 Introduction

The Model 880 Series are designed as industrial radiography exposure devices and transport packages for Type B quantities of special form radioactive material. They conform to the Type B(U)-96 criteria for packaging in accordance 10 CFR 71, 49 CFR 173, IAEA Regulations for the Safe Transport of Radioactive Material No. TS-R-1 (ST-1, Revised) 1996 Edition (Revised) and Canadian Nuclear Safety Commission (CNSC) PTNS Regulations SOR/2000-208. This submission is formatted in accordance with NUREG-1886 "Joint Canada – United States Guide for Approval of Type B(U) and Fissile Material Transportation Packages" dated March 2009.

1.2 Package Description

The Model 880 Series packages are constructed in accordance with the drawings included in Section 1.3. The 880 has three versions for Type B quantity transport. Table 1.2.A lists the maximum activity capacities of each version. The physical construction of the 880 Delta and the 880 Sigma (including the shield construction) is identical. These devices differ from the 880 Elite devices in the size and weight of the shield as well as the overall package weight.

The shields for the 880 Delta and 880 Sigma vary in Ir-192 unit capacity which is based on the natural variability in the shield consistency created during the depleted uranium pouring/cooling process. These variations can produce shields with slightly lower shielding capacity than the 150 Curies required for the 880 Delta (e.g. 130 Curies of Ir-192) and are therefore made into 880 Sigma packages. (Note that the capacity for both the 880 Delta and 880 Sigma are the same for Se-75. The gamma energy from Se-75 is less penetrating than Ir-192 therefore the shield variations which are clearly observable for Ir-192 do not occur with Se-75. Since the shielding on the 880 Sigma is greater than the shielding for the 880 Elite, and the 880 Elite is rated for the same Se-75 capacity as the 880 Delta, the 880 Sigma will be adequate to shield Se-75 at that same capacity.

All 880 Series packages allow for the use of an optional jacket which facilitates the package use as a radiography device and transport package. There are two versions of the jacket. These jackets do not impair the package's ability to meet the Type B requirements as described in this Safety Analysis Report (SAR).

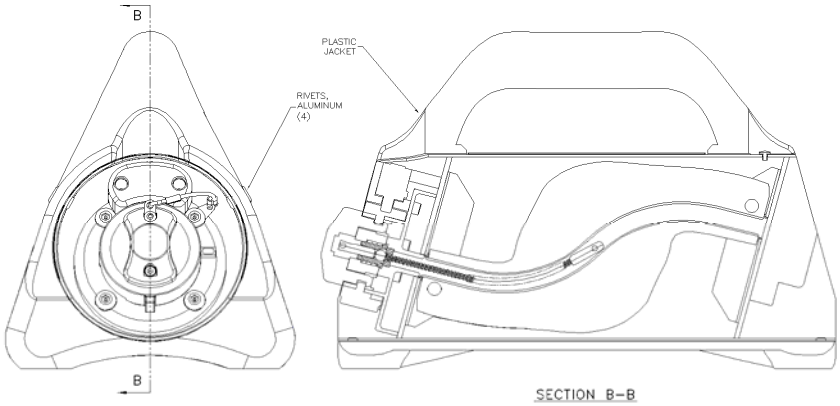

Figure 1.2.A – 880 Package with Optional Jacket (Version 1)

The packages without the jacket measure approximately 5 inches (127 mm) in diameter by 13 5/16 inches (338 mm) long. The packages with Version 1 of the jacket measure approximately 13 ½ inches (343 mm) long by 7 ½ inches (191 mm) wide by 9 inches (229 mm) tall. The packages with Version 2 of the jacket measure approximately 13 ½ inches (343 mm) long by 6 inches (152 mm) wide by 11.33 inches (288 mm) tall. The general package information is shown in Table 1.2.A. The maximum weight of the package contents will not exceed 0.04 lbs (18 grams) as special form sources attached to a source wire assembly.

Table 1.2A: Model 880 Series Package Information

Model	Nuclide	Form	Maximum Capacity[1]	Maximum DU Weight	Maximum Weight Without Jacket	Maximum Weight With Jacket (Version 1)	Maximum Weight With Jacket (Version 2)
880 Delta	Ir-192	Special Form Sources	150 Ci	34.4 lbs (15.6 kg)	46 lbs (21 kg)	52 lbs (24 kg)	55 lbs (25 kg)
	Se-75	Special Form Sources	150 Ci				
880 Sigma	Ir-192	Special Form Sources	130 Ci	34.4 lbs (15.6 kg)	46 lbs (21 kg)	52 lbs (24 kg)	55 lbs (25 kg)
	Se-75	Special Form Sources	150 Ci				
880 Elite	Ir-192	Special Form Sources	50 Ci	25 lbs (11 kg)	37 lbs (17 kg)	42 lbs (19 kg)	45 lbs (20 kg)
	Se-75	Special Form Sources	150 Ci				

1.2.1 Packaging

Except for the shield assembly, fill foam, some of the lock assembly components, lock cover, shield pin, source wire assembly and optional jackets, all material of construction are stainless steels. The keyed lock assembly mount and the lock cover can be either stainless steel or aluminum. The major components of the package consist of the following:

- Welded cylindrical body
- Depleted Uranium shield
- Rear plate with locking assembly
- Front plate with shield port
- Optional jacket (two versions)

[1] Maximum Capacity Activity for Ir-192 is defined as output Curies as required in ANSI N432 and 10 CFR 34.20 and in line with TS-R-1 and Rulemaking by the USNRC and the USDOT published in the Federal Register on 26 January 2004 .

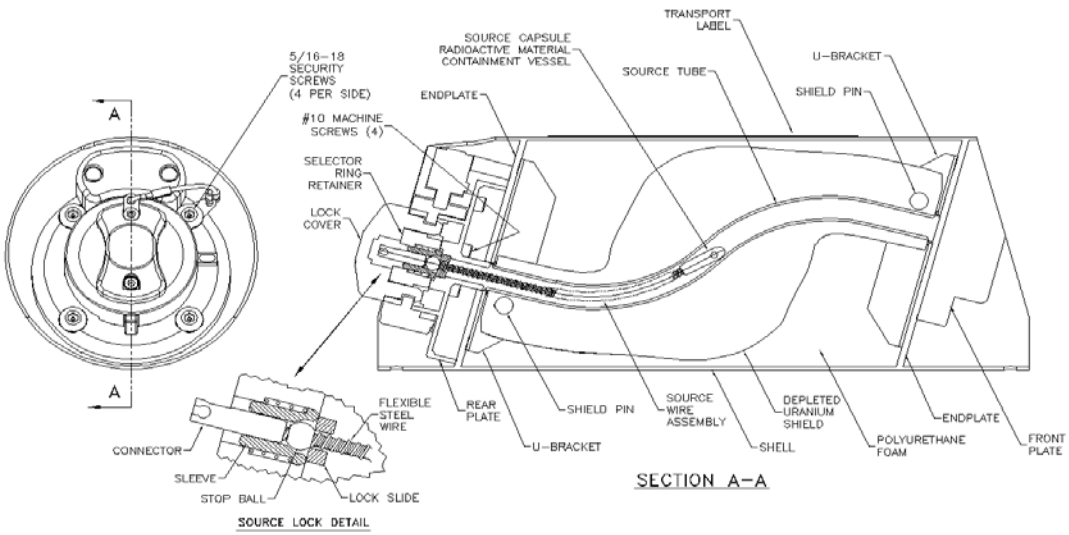

Figure 1.2.B - Model 880 Transport Package

The following paragraphs describe the major components of the transport package

1.2.1.1 Welded Cylindrical Body

The welded body consists of a 5 inch (127 mm) diameter, 0.065 inch (1.5 mm) walled stainless steel tube with 0.12 inch (3 mm) thick endplates welded to the inner tube diameter at both ends. Both endplates are parallel to each other but are angled at 75º to the horizontal tube. The endplates are machined at the 75º angle to reduce the welding gap at the tube-shell interface. A U-bracket is welded to each endplate and located on the inside cavity of the shell tube.

1.2.1.2 Depleted Uranium Shield

The depleted uranium shield is centrally located within the welded body between the endplates. It is fastened to each U-bracket by a 0.37 inch (9.5 mm) diameter, titanium shield pin. The pin passes through a hole on the end (ear) of the shield and holes of the U-bracket. A U-shaped copper spacer fills the gap between the shield and U-bracket. The shield is not supported by the source tube (S-tube).

An S-shaped titanium source tube is cast into the center of the shield. The source tube provides a cavity for the source wire assembly to travel through during use. The source capsule is positioned at the center of the shield when the source wire is in the secured position.

The depleted uranium shield weights are shown in Table 1.2.A. The difference in weight is contained in the center section of the shield. The end (ear) sections of the two shield types are structurally the same.

Polyurethane foam is poured through a hole in the endplate and U-bracket to fill the cavity around the depleted uranium shield. This prevents contamination to and from the shield. A label with all the necessary transport information is attached to the cylindrical shell body.

1.2.1.3 Rear Plate with Locking Assembly

The rear plate assembly is attached to the welded body with four (4) 5/16-18, 1 ½ inch long security (tamperproof) screws and thread lubricant through rivnuts assembled into the endplate. The security screws are torqued to 110 ± 5 inch-pounds.

The rear plate assembly consists of a source wire locking mechanism fastened to the rear plate with four (4), #10-32, 1 ¼ inch long machine screws and loctite. These screws are torqued to 30 ± 5 inch-pounds. A lock mount with keyed plunger lock is secured to the rear plate with two (2), #10-32, ½ inch long machine screws and loctite. Torque requirements for the lock mount screws are not needed. The keyed plunger lock serves as a tertiary lock for transport. It can only be engaged when the source wire assembly is located in the fully shielded position as described in Section 1.2.4. The lock mount for the keyed plunger lock can be made from aluminum or stainless steel. Additionally the aluminum version can include a stainless steel sleeve which is inserted between the lock mount and the keyed plunger lock.

The locking mechanism of the rear plate assembly is protected during storage and transportation by a lock cover. This lock cover can be either aluminum or stainless steel.

1.2.1.4 Front Plate with Shield Port Assembly

The front plate assembly is attached to the welded body with four (4) 5/16-18, 1 ½ inch long security (tamperproof) screws through rivnuts assembled into the endplate. The security screws are torqued to 110 ± 5 inch-pounds.

The front plate assembly consists of shielded port mechanism contained within the front plate. The mechanism can only be opened with a guide tube connector fitting inserted into the opening and rotated. A knob covers the port and blocks access to the shield disc. The shield disc and knob both block access to the source assembly.

1.2.1.5 Optional Jacket

The package cylinder can be modified to include an optional polyurethane jacket. There are two versions of the jacket which can be used for these packages. Both versions of the jacket provide a handle, a stable base and are attached to the shell cylinder by screws located outside the shield cavity area. Version 1 of the jacket has a handle section that contains a wire molded in for additional reinforcement. The other version of the jacket incorporates wheels on the base to facilitate movement during use as a radiography exposure device.

Both jackets include a cutout to allow permanent labeling to be attached directly to the shell cylinder. Space is available on the permanent label for stick-on DOT shipping labels. The permanent label has the required information etched similar to other previously approved Type B packages (CoC 9283, 9269) which have demonstrated the ability to pass the fire test.

1.2.1.6 Containment System

The locking assembly on the Model 880 Series transport packages is similar to the locking assembly on the previously approved model 660-OP package, Certificate number 9283. This allows the same source wire assemblies to be used in the Model 880 as in the 660-OP package. The radioactive material of these source assemblies is sealed in a special form source capsule. The source capsule, stop ball and connector are swaged to a flexible steel wire to form the source wire assembly.

1.2.2 Contents

The Model 880 Series transport packages are designed to transport special form capsules containing the isotopes listed in Table 1.2.A. Additional information for the contents is provided in Table 1.2.B. Table 1.2.B has been adjusted to include the maximum decay heat for Ir-192 adjusted to account for content activity of the source, and to include the weight of the source wire assembly holding the radioactive contents. Actual content to output activity varies based on the capsule configuration as well as variations in isotope self-absorption. A factor of 2.3 was used for Ir-192 to convert output activity to content activity as this factor reflects the worst case variation for Ir-192 sources transported in these packages. The source capsules are loaded into the Model 880 Series device and secured according to the procedure described in Section 7.

The maximum weight of the contents for the shield containers listed in Table 1.2.B are calculated based on the package capacity, the lowest specific activity of Ir-192 (200 Ci/gram) used in source production for these devices and the weight of the remaining source assembly components that comprise the source holder.

Note: Ir-192 of higher specific activity can be used but this would produce sources with lower total mass of the contents. Se-75 has a lower density than Ir-192 and will produce source capsules of lesser maximum weight than their Ir-192 counterparts. Values listed in the Table 1.2.B are the maximum content masses.

Table 1.2.B: Isotope Information Permitted in the Model 880 Series Packages

Package ID	Isotope	Activity[1]	Capsule Form[2]	Chemical/Physical Form	Maximum Content Weight	Maximum Decay Heat[3]
880 Delta	Ir-192	150 Ci	Special Form	Metal	18 gram	3 Watts
	Se-75	150 Ci	Special Form	Metal-Selenide Compound		0.76 Watts
880 Sigma	Ir-192	130 Ci	Special Form	Metal	18 gram	2.4 Watts
	Se-75	150 Ci	Special Form	Metal-Selenide Compound		0.76 Watts
880 Elite	Ir-192	50 Ci	Special Form	Metal	18 gram	1 Watt
	Se-75	150 Ci	Special Form	Metal-Selenide Compound		0.76 Watts

[1] Maximum Activity for Ir-192 is defined as output Curies as required in ANSI N432 and 10 CFR 34.20 and in line with TS-R-1 and Rulemaking by the USNRC and the USDOT published in the Federal Register on 26 January 2004.
[2] Special Form is defined in 10 CFR 71, 49 CFR 173, and IAEA TS-R-1.
[3] Maximum decay heat for Ir-192 is calculated by correcting the output activity to content activity. A factor of 2.3 is used for Ir-192 to account for source capsule and self-absorption in this conversion. No corrections are made for Se-75.

1.2.3 Special Requirements for Plutonium

Not applicable. This package is not used for the transportation of plutonium.

1.2.4 Operational Features

These packages do not involve complex containment systems for source securement. The sources for these packages are all special form, welded capsules. The source wire assembly is held securely in the device by components of the rear plate assembly. One of these components, the sleeve, in conjunction with the selector ring retainer, prevents the stop ball of the source wire from being pulled through the rear of the package.

Another component of the rear plate assembly, the lock slide, prevents the stop ball from being pushed out through the front of the package when in the secured position. When the Model 880 Series device is prepared for transport, the lock slide is locked in the secured position and the selector ring is rotated to the lock position preventing source movement. A cover over the source wire connector prevents access to the source assembly until a keyed lock is actuated and the cover removed. This cover is in place during transport of the package. The 880 Series transport containers are assembled and secured as described in Section 7.

1.3 Appendix

Figures 1.3.A. through 1.3.C show sketches of the Model 880 style packages as prepared for transport in the three possible transport configurations. Additional drawings of the Model 880 style transport packages are also enclosed in this appendix.

Figure 1.3.A – Sketch of Model 880 without optional Jacket Prepared for Transport

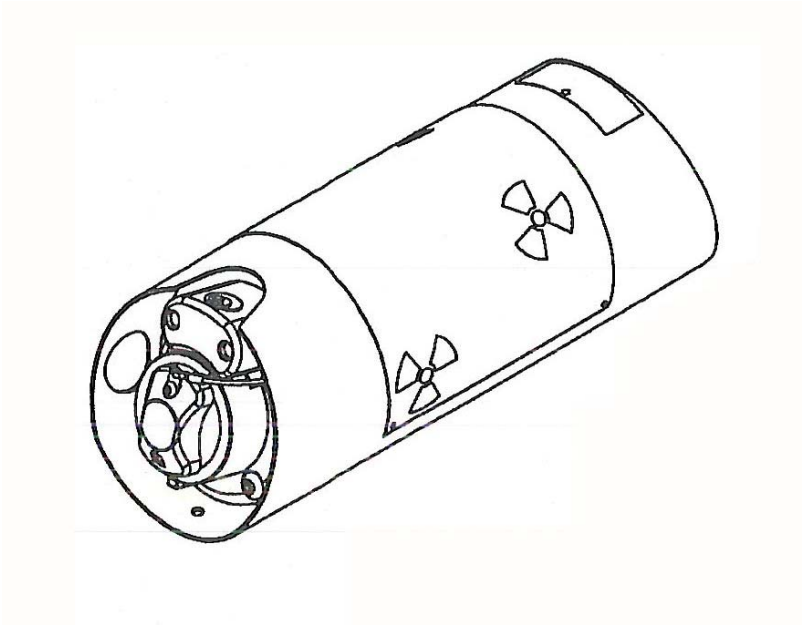

Figure 1.3.B – Sketch of Model 880 with optional Jacket #1 Prepared for Transport

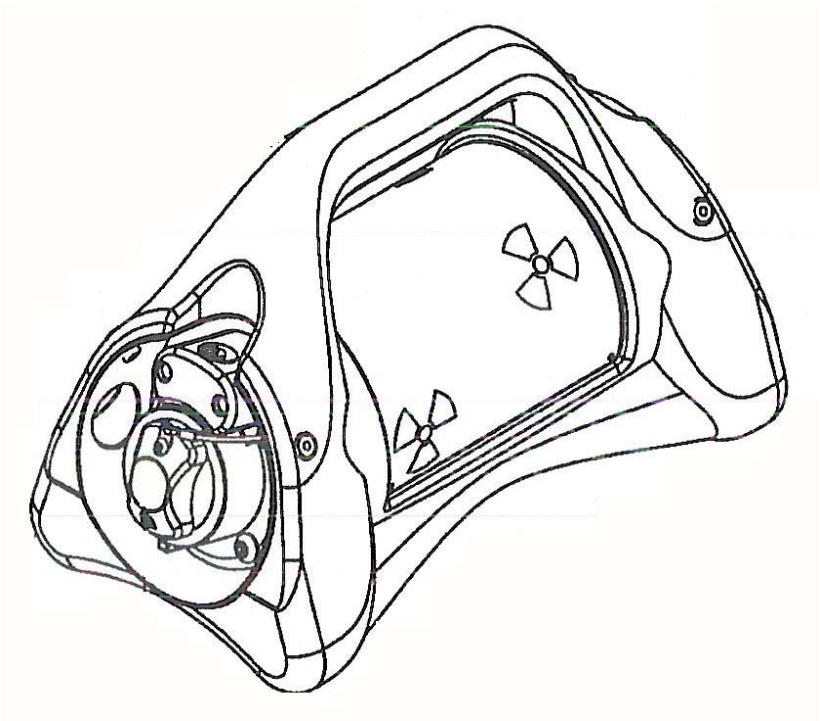

Figure 1.3.C – Sketch of Model 880 with optional Jacket #2 Prepared for Transport

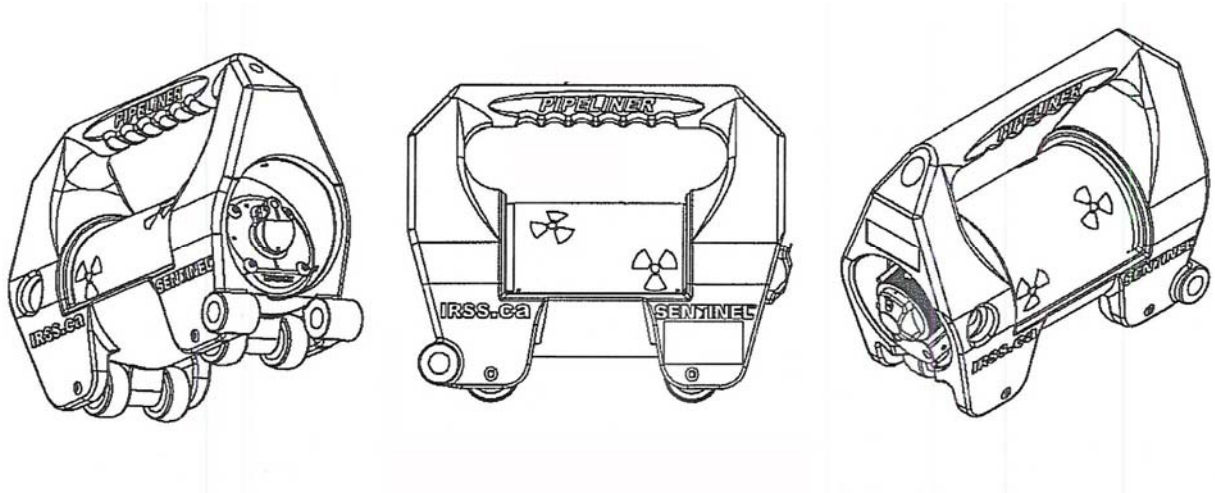

MODEL No.	MAXIMUM TOTAL PACKAGE WEIGHT WITH JACKET	MAXIMUM TOTAL PACKAGE WEIGHT WITHOUT JACKET	MAXIMUM DEPLETED URANIUM SHIELD WEIGHT	MAXIMUM IR192 CAPACITY
880 ELITE	42 LBS.	37 LBS.	25.0 LBS.	50 CURIE
880 DELTA	52 LBS.	46 LBS.	34.4 LBS.	150 CURIE
880 SIGMA	52 LBS.	46 LBS.	34.4 LBS.	130 CURIE

INDICATES CENTER OF GRAVITY (CG).

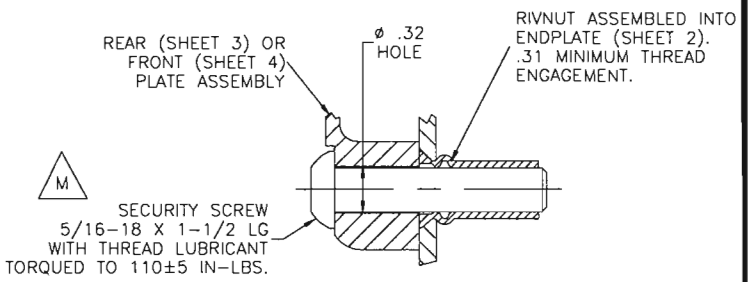

REAR & FRONT PLATE ASSEMBLY ATTACHMENT
8 PLACES

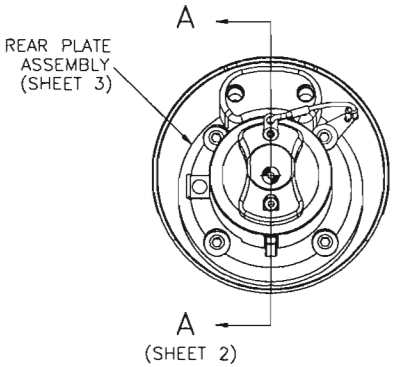

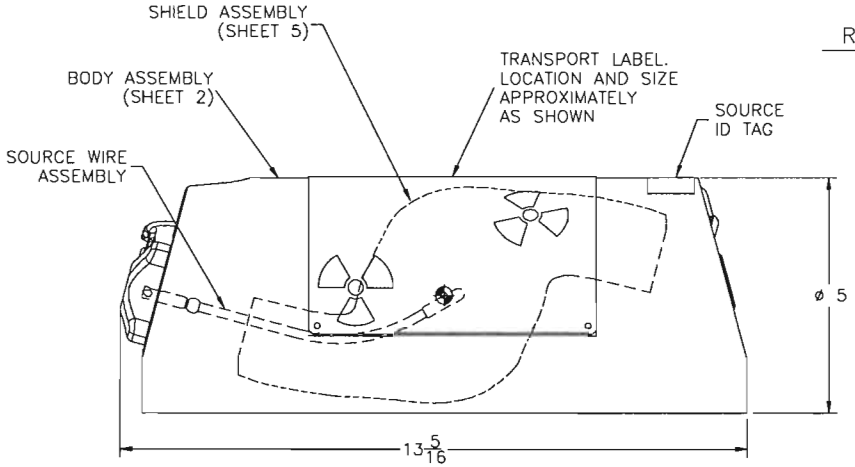

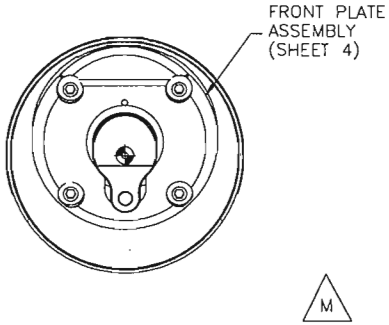

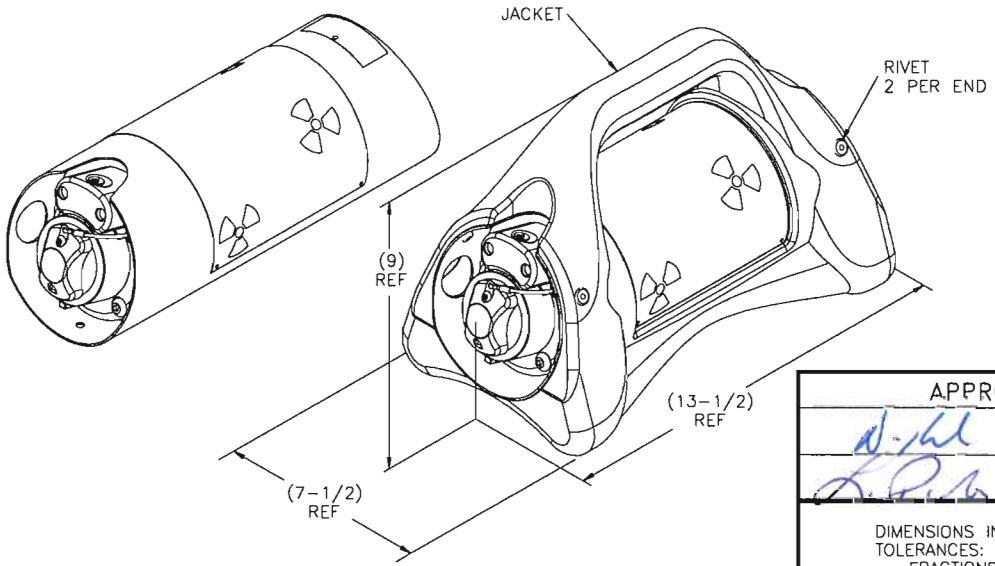

TRANSPORT PACKAGE WITHOUT & WITH OPTIONAL JACKET

PART NAME	QTY	MATERIAL
RIVET	4	ALUMINUM/STAINLESS STEEL
OPTIONAL JACKET	1	POLYURETHANE
SECURITY SCREW	8	18-8 SS - SEE SHEET 6 NOTE 8
SOURCE ID TAG	1	STAINLESS STEEL OR STEEL
TRANSPORT LABEL	1	STAINLESS STEEL OR STEEL - FIRE PROOF
SOURCE WIRE ASSEMBLY	1	MODEL 424-9 OR EQUIVALENT
SHIELD ASSEMBLY	1	SEE SHEET 5
FRONT PLATE ASSEMBLY	1	SEE SHEET 4
REAR PLATE ASSEMBLY	1	SEE SHEET 3
BODY ASSEMBLY	1	SEE SHEET 2

ERF 2474

APPROVALS

[illegible]	19Nov10
[illegible]	19Nov10

DIMENSIONS IN INCHES
TOLERANCES:
FRACTIONS ±1/16
X ± 0.1
XX ± 0.01
XXX ± 0.005

QSA GLOBAL
40 NORTH AVE, BURLINGTON, MA 01803

DESCRIPTIVE DRAWING

TITLE MODEL 880 PROJECTOR

SIZE A | DWG. NO. R88000 | REV M

SCALE: NONE | SHEET 1 OF 6

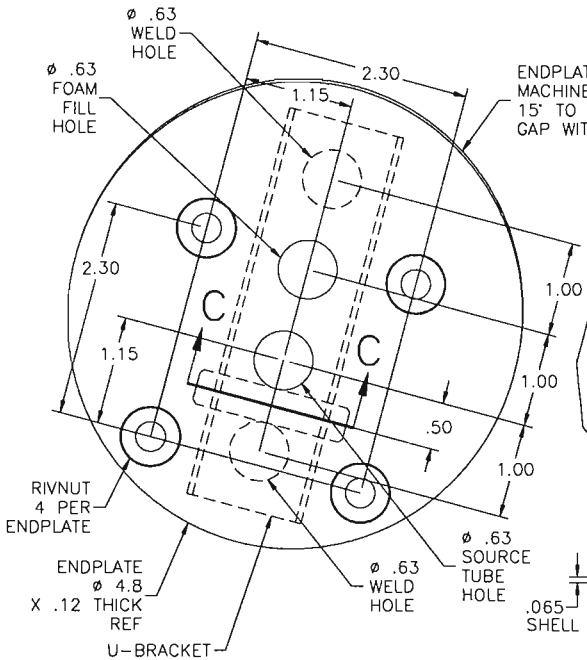

SECTION B–B

ENDPLATE PATTERN BOTH ENDS

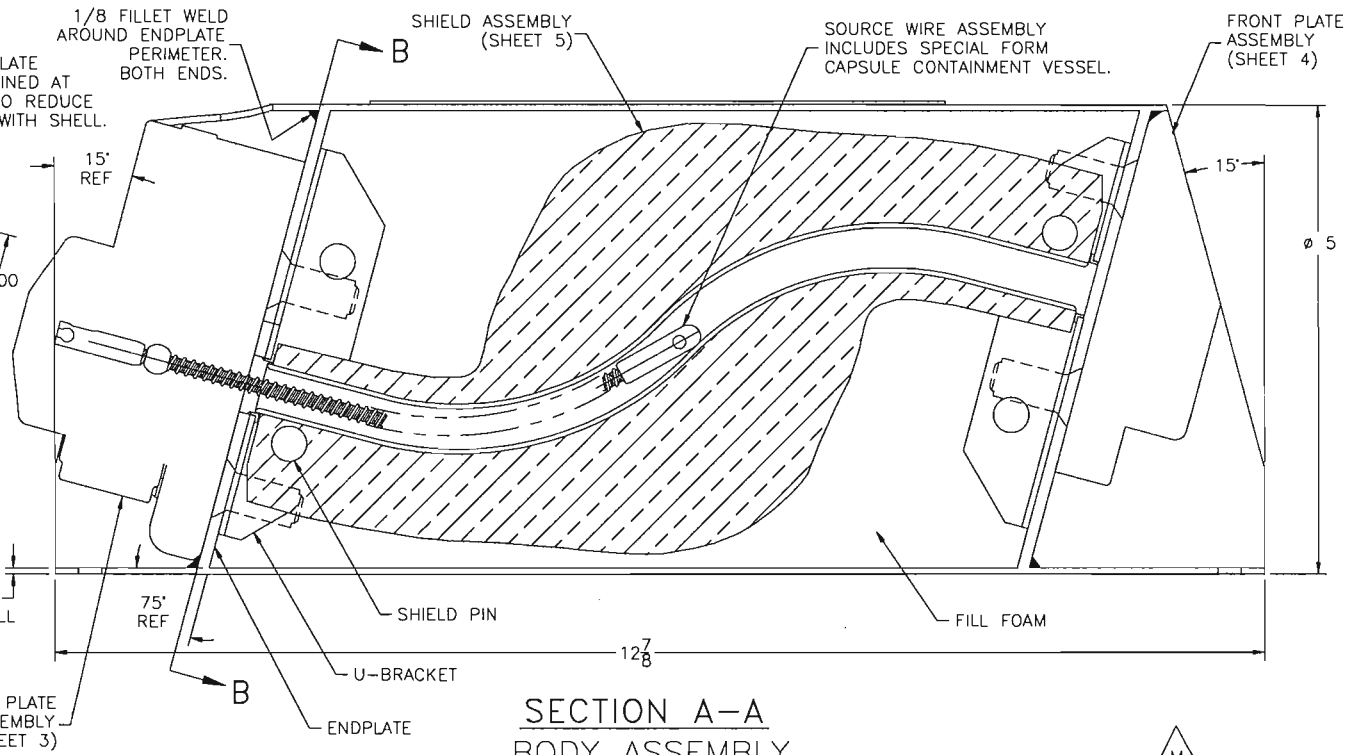

SECTION A–A

BODY ASSEMBLY

M

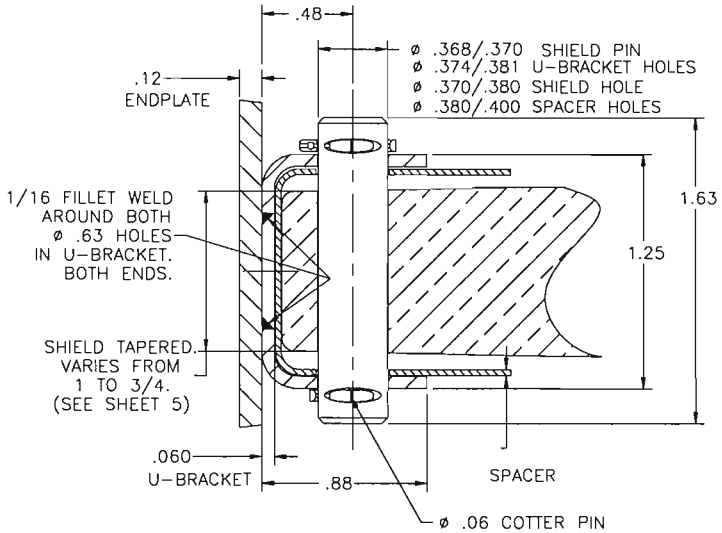

SECTION C–C

SHIELD ATTACHMENT BOTH ENDS
(SECTION TAKEN FROM SECTION B–B)

ALL WELDING CONFORMS TO NOTE 1 ON SHEET 6.

M

PART NAME	QTY	MATERIAL
SHIELD ASSEMBLY	1	SEE SHEET 5
FILL FOAM	AR	8 PCF (MIN) POLYURETHANE
RIVNUT	8	430 STAINLESS STEEL - SEE SHEET 6 NOTE 6
COTTER PIN	4	18-8 STAINLESS STEEL – NITS
SPACER	2	COPPER (MIN 0.03) – NITS
SHIELD PIN	2	6AL-4V TITANIUM - SEE SHEET 6 NOTE 12
U-BRACKET	2	304L STAINLESS STEEL - SEE SHEET 6 NOTE 3
ENDPLATE	2	304L STAINLESS STEEL - SEE SHEET 6 NOTE 3
SHELL	1	304L STAINLESS STEEL - SEE SHEET 6 NOTE 2

QSA GLOBAL
40 NORTH AVE, BURLINGTON, MA 01803

DESCRIPTIVE DRAWING

DIMENSIONS IN INCHES
TOLERANCES:
FRACTIONS ±1/16
X ± 0.1
XX ± 0.01
XXX ± 0.005

TITLE MODEL 880 PROJECTOR

SIZE A | DWG. NO. R88000 | REV M

SCALE: NONE | SHEET 2 OF 6

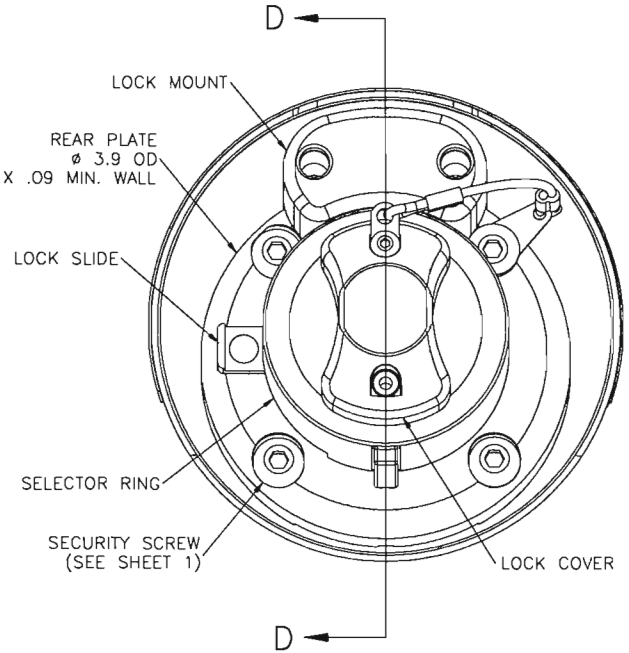

REAR PLATE ASSEMBLY

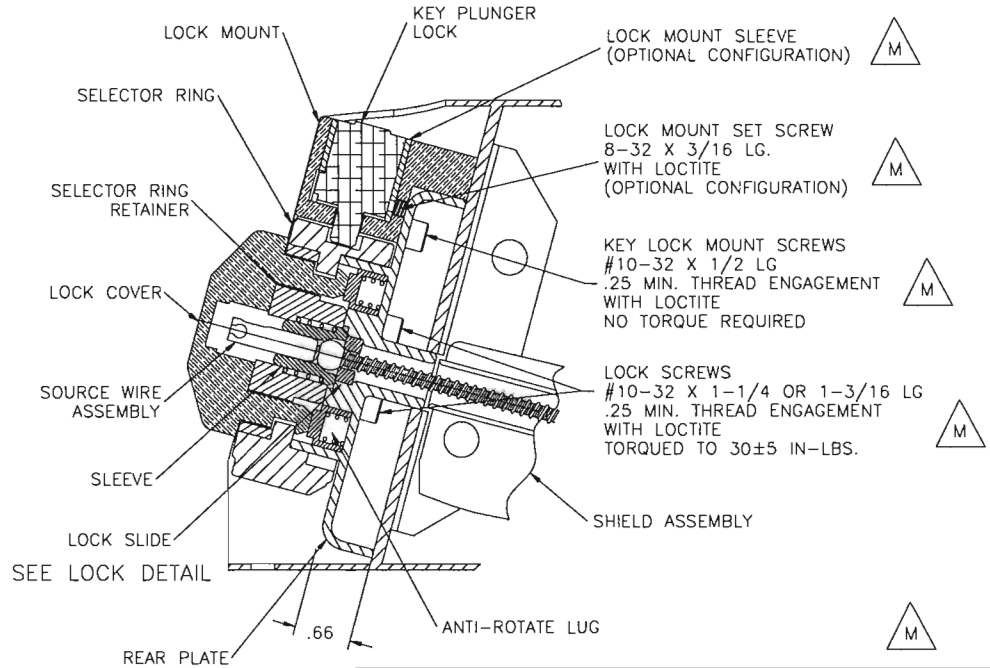

SECTION D-D

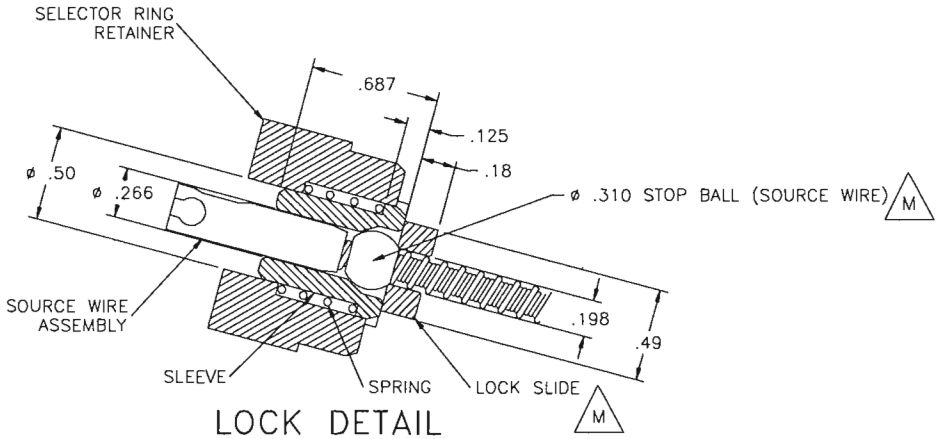

LOCK DETAIL

SOURCE ASSEMBLY SECURED POSITION

PART NAME	QTY	MATERIAL
LOCK MOUNT SET SCREW	1	STAINLESS STEEL - NITS
LOCK MOUNT SLEEVE	1	STAINLESS STEEL - NITS
KEY LOCK MOUNT SCREW	2	STAINLESS STEEL - NITS
LOCK MOUNT	1	ALUMINUM/STAINLESS STEEL - NITS
LOCK COVER	1	ALUMINUM/STAINLESS STEEL - NITS
ANTI-ROTATE LUG	2	STAINLESS STEEL - NITS
LOCK SLIDE	1	17-4 PH SS - SEE SHEET 6 NOTE 4
SLEEVE	1	TUNGSTEN - SEE SHEET 6 NOTE 13
SELECTOR RING	1	303/CF16FA SS - SEE SHEET 6 NOTE 10
LOCK SCREW	4	S30430 SS - SEE SHEET 6 NOTE 7
SELECTOR RING RETAINER	1	303 SS - SEE SHEET 6 NOTE 5
REAR PLATE	1	304 SS - SEE SHEET 6 NOTE 9

QSA GLOBAL

40 NORTH AVE, BURLINGTON, MA 01803

DESCRIPTIVE DRAWING

DIMENSIONS IN INCHES
TOLERANCES:
FRACTIONS ±1/16
X ± 0.1
XX ± 0.01
XXX ± 0.005

TITLE MODEL 880 PROJECTOR

SIZE A | DWG. NO. R88000 | REV M

SCALE: NONE | SHEET 3 OF 6

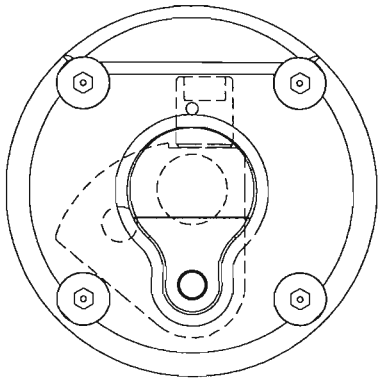

SHIPPING POSITION

PORT COVERED
& SHIELDED.

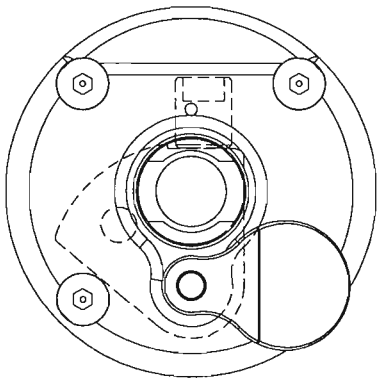

LOCKED POSITION

LIFT KNOB & ROTATE 90°.
PORT SHIELDED.

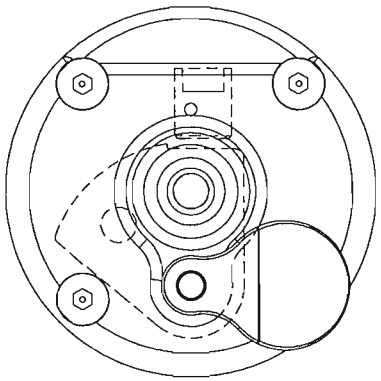

CONNECT POSITION

INSERT & ROTATE FITTING
TO RELEASE SLIDER.
PORT SHIELDED.

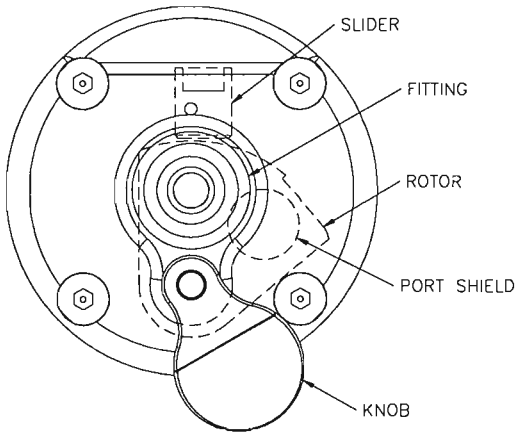

EXPOSE POSTION

ROTATE KNOB 50°
TO TURN ROTOR.
PORT OPEN.

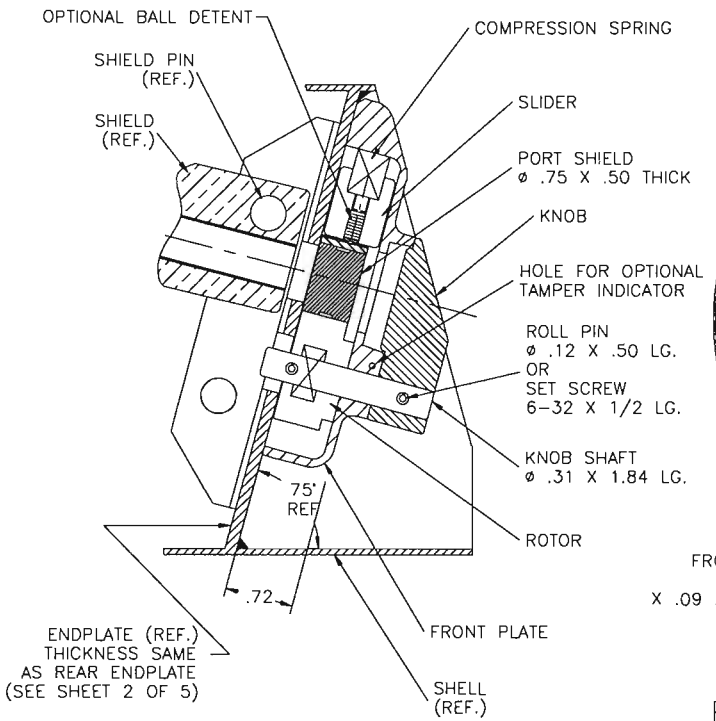

SECTION F–F

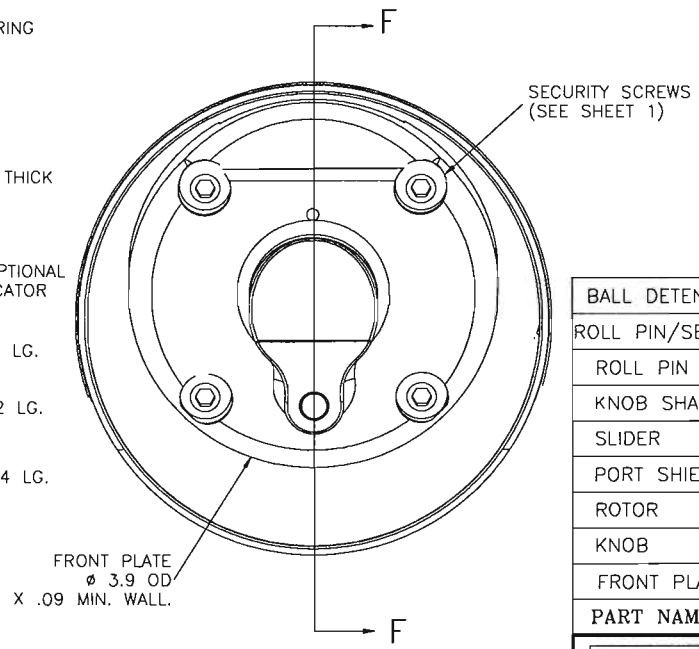

FRONT PLATE ASSEMBLY

M

PART NAME	QTY	MATERIAL
BALL DETENT	1	BRASS – NITS
ROLL PIN/SET SCREW	1/1	STAINLESS STEEL – NITS
ROLL PIN	2	STAINLESS STEEL – NITS
KNOB SHAFT	1	BRASS – NITS
SLIDER	1	BRASS – NITS
PORT SHIELD	1	TUNGSTEN – NITS
ROTOR	1	STAINLESS STEEL – NITS
KNOB	1	STAINLESS STEEL – NITS
FRONT PLATE	1	STAINLESS STEEL – NITS

QSA GLOBAL
40 NORTH AVE, BURLINGTON, MA 01803

DESCRIPTIVE DRAWING

DIMENSIONS IN INCHES
TOLERANCES:
FRACTIONS ±1/16
X ± 0.1
XX ± 0.01
XXX ± 0.005

TITLE MODEL 880 PROJECTOR

SIZE A | DWG. NO. R88000 | REV M

SCALE: NONE | SHEET 4 OF 6

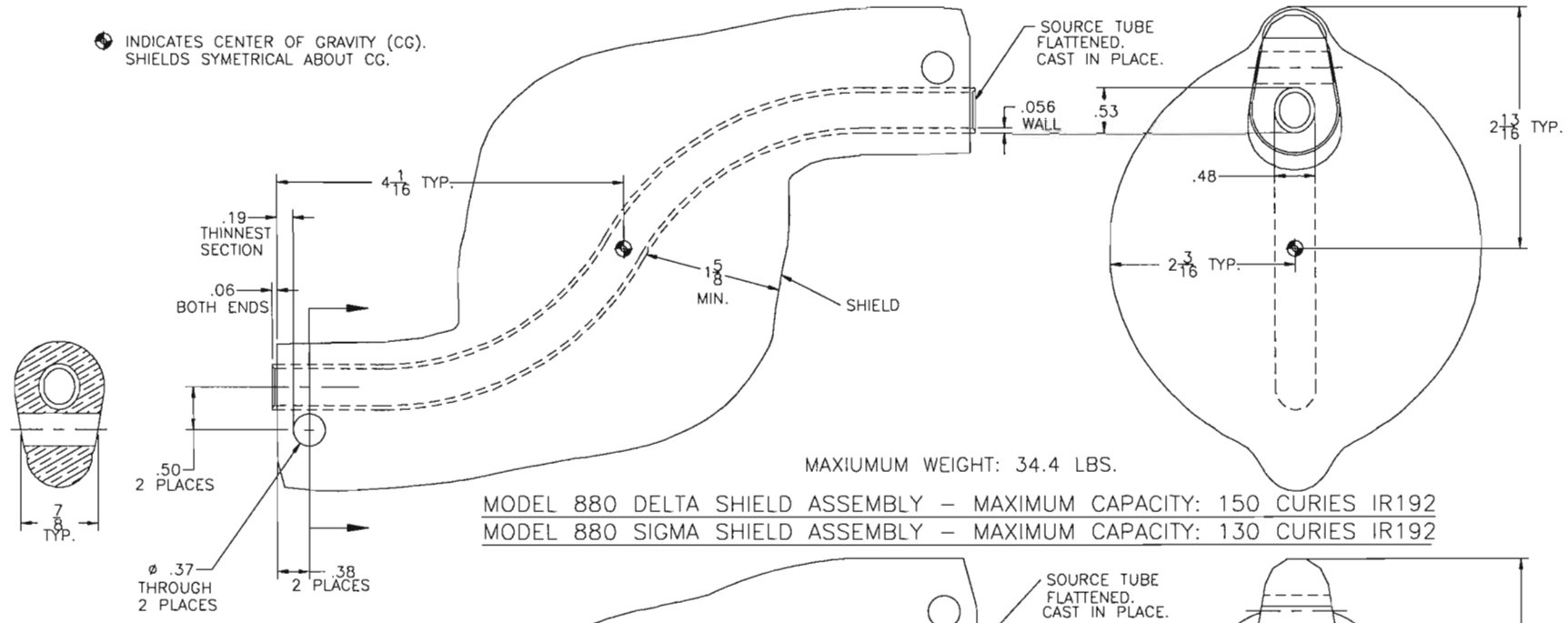

MAXIUMUM WEIGHT: 34.4 LBS.

MODEL 880 DELTA SHIELD ASSEMBLY – MAXIMUM CAPACITY: 150 CURIES IR192

MODEL 880 SIGMA SHIELD ASSEMBLY – MAXIMUM CAPACITY: 130 CURIES IR192

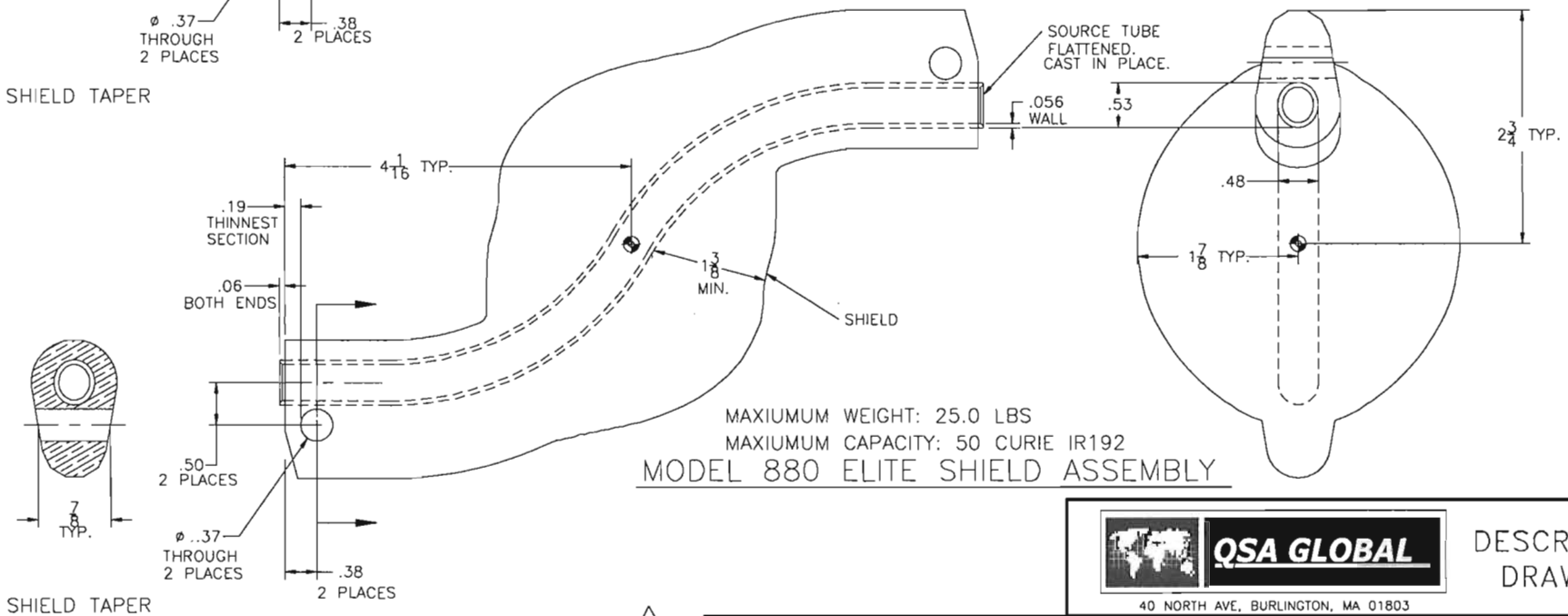

MAXIUMUM WEIGHT: 25.0 LBS

MAXIUMUM CAPACITY: 50 CURIE IR192

MODEL 880 ELITE SHIELD ASSEMBLY

PART NAME	QTY	MATERIAL
SOURCE TUBE	1	3AL-2.5V TITANIUM – SEE SHEET 6 NOTE 11
SHIELD	1	DEPLETED URANIUM

M

DIMENSIONS IN INCHES
TOLERANCES:
FRACTIONS ±1/16
X ± 0.1
XX ± 0.01
XXX ± 0.005

QSA GLOBAL
40 NORTH AVE, BURLINGTON, MA 01803

DESCRIPTIVE DRAWING

TITLE MODEL 880 PROJECTOR

SIZE A | DWG. NO. R88000 | REV M

SCALE: NONE | SHEET 5 OF 6

M

NOTES:
1. AS OF 19 MARCH 2008, ALL WELDING AND INSPECTION FOR COMPONENTS PURCHASED AND ASSEMBLED ON OR AFTER 19 MARCH 2008 IS PER THE REQUIREMENTS OF:
   AWS D1.3: 1998 STRUCTURAL WELDING CODE – SHEET METAL
   AWS D1.6: 1999 STRUCTURAL WELDING CODE – STAINLESS STEEL
   INSPECTED BY WELD INSPECTORS QUALIFIED TO ASNT SNT–TC–1A.

NOTES 2 THRU 11 APPLICABLE TO COMPONENTS FABRICATED AFTER 1 DECEMBER 2010:
2. TYPE 304L STAINLESS STEEL PER ASTM A249 OR A269.
3. TYPE 304L STAINLESS STEEL PER ASTM A240, A480, OR A666.
4. TYPE 630 (17–4 PH) STAINLESS STEEL PER ASTM A564/A564M.
5. TYPE 303 STAINLESS STEEL PER ASTM A582/A582M.
6. TYPE 430 STAINLESS STEEL PER ASTM A276 OR A580.
7. UNS S30430 STAINLESS STEEL PER FEDERAL SPECIFICATION FF–S–86.
8. TYPE 18–8 STAINLESS STEEL WITH THE FOLLOWING MECHANICAL PROPERTIES:
   MINIMUM ULTIMATE TENSILE STRENGTH = 70,000 PSI,
   MINIMUM YIELD STRENGTH (2% OFFSET) = 45,000 PSI,
   MINIMUM ELONGATION (IN 2 INCHES) = 30%.
9. TYPE 304 STAINLESS STEEL PER ASTM A276, A479, A240, A666, OR A743 GRADE CF3.
10. TYPE 303/CF16FA STAINLESS STEEL PER ASTM A743.
11. TYPE 3AL–2.5V TITANIUM PER ASTM B861.
12. TYPE 6AL–4V TITANIUM PER ASTM B348.
13. TUNGSTEN PER ASTM B777 CLASS 1.

DIMENSIONS IN INCHES
TOLERANCES:
FRACTIONS ±1/16
X ± 0.1
XX ± 0.01
XXX ± 0.005

QSA GLOBAL
40 NORTH AVE, BURLINGTON, MA 01803

DESCRIPTIVE DRAWING

TITLE	MODEL 880 PROJECTOR		
SIZE A	DWG. NO. R88000		REV M
	SCALE: NONE	SHEET 6 OF 6	

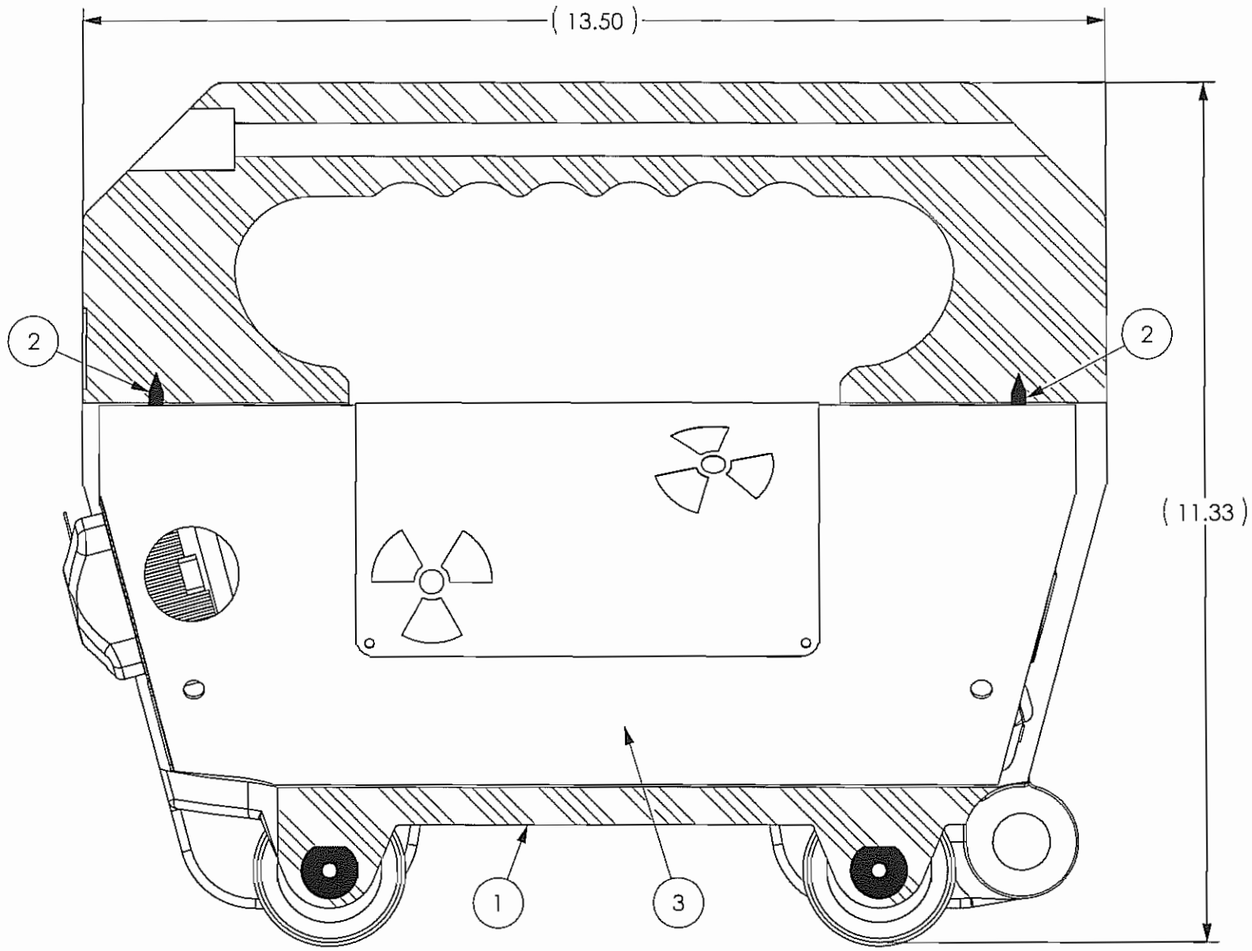

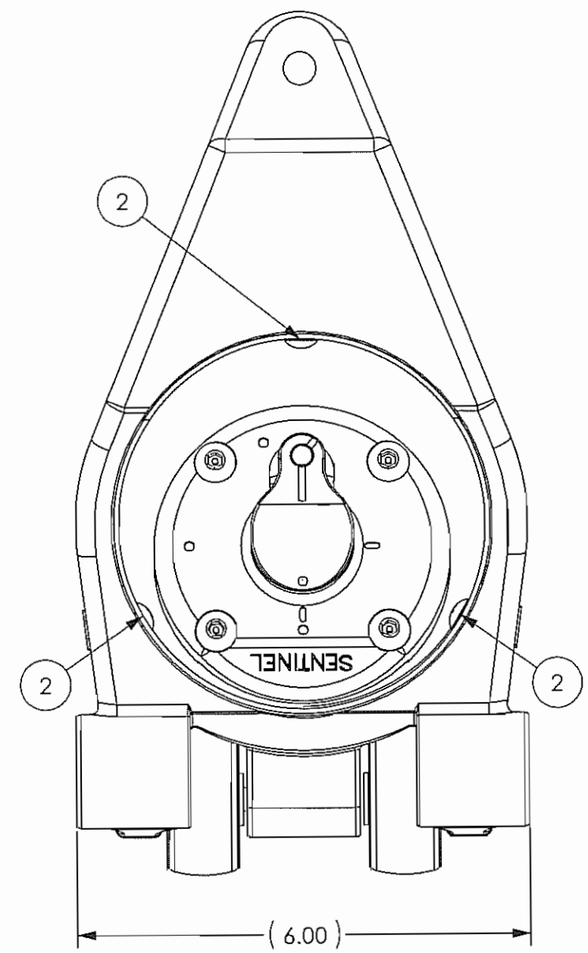

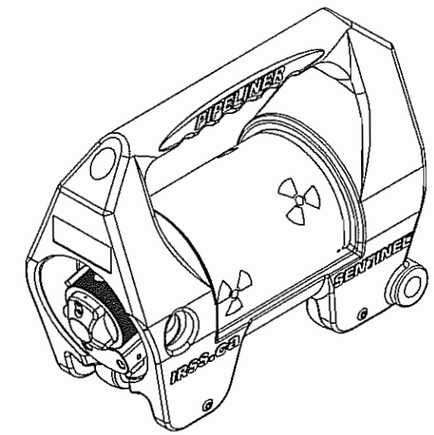

ITEM	TITLE	QTY.	MATERIAL
1	PIPELINER JACKET ASSEMBLY	1	SEE SHEET 2
2	TAMPERPROOF SCREW, #14 X 3/4	6	STAINLESS STEEL
3	MODEL 880 PROJECTOR	1	SEE DRAWING R88000

NOTES:

1. MAXIMUM WEIGHT AS SHOWN 55 LBS
2. ALL ITEMS EXCEPT (3) ARE NOT IMPORTANT TO SAFETY

ERF #	APPROVALS	DATE
2479		18 Nov 10
		18 Nov 10

UNLESS OTHERWISE SPECIFIED:

ALL DIMENSIONS ARE INCHES, TOLERANCE ±1/8

QSA GLOBAL

40 NORTH AVE, BURLINGTON, MA 01803

DESCRIPTIVE DRAWING

TITLE PIPELINER TYPE B TRANSPORT DEVICE

SIZE B | DWG. NO. R88095 | REV A

SCALE: 1:2 | SHEET 1 OF 2

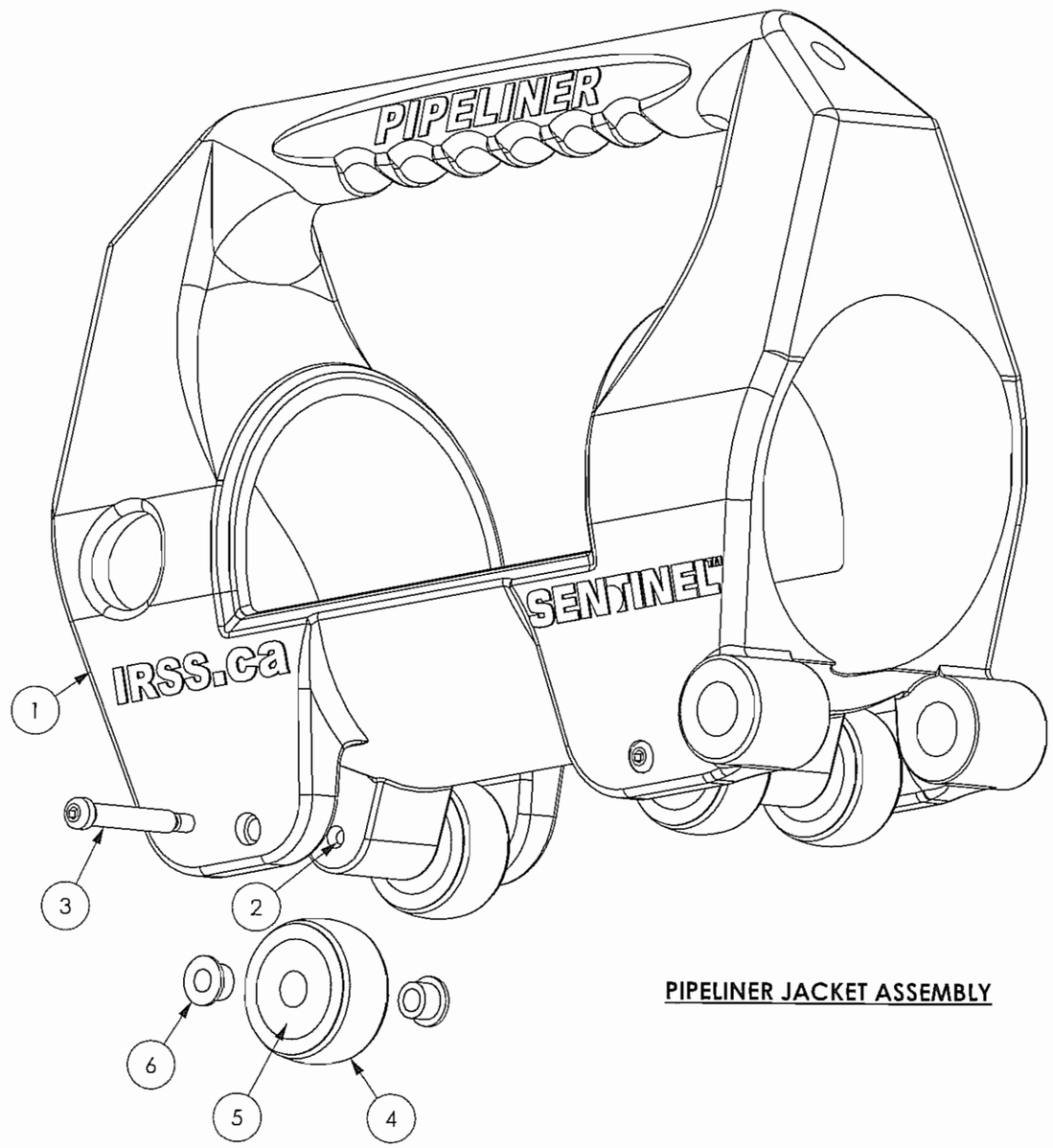

PIPELINER JACKET ASSEMBLY

ITEM	TITLE	QTY.	MATERIAL
1	JACKET	1	POLYURETHANE, 60 SHORE D
2	AXLE NUT	2	C12L14 STEEL
3	WHEEL AXLE BOLT	4	303 STAINLESS STEEL OR ALLOY STEEL Rc 32-43
4	WHEEL	4	POLYURETHANE, 95 SHORE A
5	WHEEL HUB	4	6061-T6 ALUMIUNUM
6	WHEEL HUB BUSHING	8	SINTERED BRONZE

UNLESS OTHERWISE SPECIFIED:

ALL DIMENSIONS ARE INCHES, TOLERANCE ±1/8

QSA GLOBAL

40 NORTH AVE, BURLINGTON, MA 01803

DESCRIPTIVE DRAWING

TITLE **PIPELINER JACKET ASSEMBLY**

SIZE B | DWG. NO. **R88095** | SCALE: 1:2 | SHEET **2** OF **2** | REV **A**

Section 2 - STRUCTURAL EVALUATION

This section identifies and describes the principal structural engineering design of the packaging, components, and systems important to safety and compliance with the performance requirements of 10 CFR Part 71 and TS-R-1.

2.1 Description of Structural Design

2.1.1 Discussion

The Model 880 Series transport packages are described in Section 1.2, "Package Description."

2.1.2 Design Criteria

The Model 880 Series transport packages are designed to comply with the requirements for Type B(U) packaging as prescribed by 10 CFR 71, IAEA TS-R-1 (ST-1, Revised) 1996 Edition (Revised) and CNSC PTNS SOR/2000-208. All design criteria are evaluated by a straightforward application of the appropriate section of these requirements.

2.1.3 Weight and Centers of Gravity

The transport package weight varies from 37 lbs (17 kg) up to 55 lb (25 kg). The center of gravity of the 880 Series transport packages is approximately 2.5 inches (64 mm) above the bottom of the package.

2.1.4 Identification of Codes and Standards for Package Design

See Section 2.1.2 relating to design criteria of the package. Any applicable, specific codes or standards related to the finished assemblies for these transport packages are specified on the drawings contained in Appendix 1.3. All component fabrication (including assembly) is controlled under the QSA Global, Inc. Quality Assurance Plan approved by the USNRC and ISO. All welding under this plan adheres to the standards referenced on the drawings in Appendix 1.3. All hardware meets the standards referenced on the drawings in Appendix 1.3. All external fabrication deemed critical to safety is either verified to equivalent in-house standards or dedicated as appropriate for use prior to release as part of this transport package.

In general, the design was based on the Type A and Type B(U) container requirements of 49 CFR, 10 CFR 71, CNSC PTNS and IAEA regulations as identified in Section 1.1.

2.2 Materials

2.2.1 Material Properties and Specifications

Table 2.2.A lists the relevant mechanical properties (at ambient temperature) of the principal materials used in the Model 880 Series transport package. The location and use of these materials is shown on the drawings contained in Section 1.3. The sources in the last column are listed after the tables.

Table 2.2.A: Mechanical Properties of Principal Package Materials

Material	Tensile Strength	Yield Strength	Elongation	Source
Depleted Uranium	65 ksi	30 ksi	12%	Reference #1
Copper	25 ksi	9 ksi	25%	Reference #2
Stainless steel Plate (304L)	70 ksi	25 ksi	40%	ASTM A240/A240M or A480/A480M-09 or A666-03
Stainless steel Tubing (304L)	70 ksi	25 ksi	40%	ASTM A249 or A269-08
Stainless Steel (17-4PH)	190 ksi	170 ksi	10%	ASTM A564/A564M-04
Stainless steel Plate (304)	75 ksi	30 ksi	70%	ASTM A276-08a or A479/A479M-09, or A240/A240M or A666-03, or A743
Stainless Steel (303)	89.9 ksi	34.8 ksi	50%	ASTM A582/A582M or A743
Stainless Steel (430)	75 ksi	50 ksi	25%	ASTM A276 or A580
Titanium Tube Ti-3AL-2.5V	65 ksi	55 ksi	18%	ASTM B861
Titanium Shield Pin Ti-6AL-4V	120 ksi	115 ksi	10%	ASTM B348-09
Stainless steel lock screw (S30430)	84.1 ksi	42.1 ksi	0.55%	Federal Specification FF-S-86.
Tungsten	142 ksi	109 ksi	NA	ASTM B777 Class 1

Resource references:

1. Lowenstein, Paul. *Industrial Uses of Depleted Uranium*. American Society for Metals. Metals Handbook, Volume 3, Ninth Edition.

2. American Society for Metals. Metals Handbook, Volume 2, Tenth Edition. Ohio: Materials Park, 1990

2.2.2 Chemical, Galvanic or Other Reactions

The non-safety related materials are aluminum, brass and polyurethane. The aluminum and brass are more susceptible to corrosion and chemical reaction than the safety materials, but pose no threat to safety or containment. The safety related materials used in the construction of the Model 880 Series transport package are depleted uranium metal, stainless steel, titanium, tungsten, and copper. There will be no significant chemical or galvanic action between any of these components.

To prevent the possible formation of a eutectic alloy from steel and depleted uranium during the Hypothetical Accident Conditions thermal scenario, defined by 10 CFR 71.73(c)(4), copper separators are used at all steel-uranium interfaces. With this construction, there will be no significant chemical or galvanic reaction between package components during normal or hypothetical accident conditions of transport.

2.2.3 Effects of Radiation on Materials

Lead, depleted uranium, tungsten, steel and polyurethane foam have been used in this package as well as other transport packaging for decades without degradation of the package performance

over time due to irradiation from the package contents.

2.3 Fabrication and Examination

2.3.1 Fabrication

Package components are procured, manufactured and inspected for use under QSA Global, Inc. NRC approved QA Program Number 0040. This QA program is based on the application of guidance contained in NUREG/CR-6407 "Classification of Transportation Packing and Dry Spent Fuel Storage System Components According to Importance to Safety (1996). Quality Class A components on the package are considered to be important to the package safety. All transport packages will be evaluated and documented for compliance to the drawings provided in Section 1.3 prior to initial use as part of a Model 880 Series transport package.

2.3.2 Examination

Section 8 describes the acceptance testing and routine maintenance requirements for package components used on the Model 880 Series packages.

2.4 General Requirements for All Packages

2.4.1 Minimum Package Size

The Model 880 transport package is cylindrically shaped, with the smallest overall dimensions of 5 inches (127 mm) in diameter and 13 5/16 inches (338 mm) in length. Therefore, it exceeds the minimum package size requirements specified in the referenced regulations.

2.4.2 Tamper-Indicating Feature

The front port of the Model 880 Series packages is designed to require a special tool (guide tube fitting) to be placed in the front port and rotated before the shield can be opened. This prevents any inadvertent or unintentional opening of the package during transport. A provision for a tamper indicator seal wire around the knob of the front plate assembly is provided. This seal wire is not readily breakable, therefore if it is broken during transport, it serves as evidence of possible unauthorized access to the contents. Use of either of these features meets the tamper indicator requirements.

2.4.3 Positive Closure

These packages do not involve complex containment systems for source securement. The sources for these packages are all special form, welded capsules. The source wire assembly is held securely in the device by components of the rear plate assembly. One of these components, the sleeve, in conjunction with the selector ring retainer, prevents the stop ball of the source wire from being pulled through the rear of the package.

Another component of the rear plate assembly, the lock slide, prevents the stop ball from being pushed out through the front of the package when in the secured position. When the Model 880 Series device is prepared for transport, the lock slide is locked in the secured position and the selector ring is rotated to the lock position preventing source movement. A cover over the source wire connector prevents access to the source assembly until a keyed lock is actuated and the cover

removed. This cover is in place during transport of the package. These features maintain positive closure of the transport package and containment of the radioactive material during transport.

2.5 Lifting and Tiedown Standards for All Packages

2.5.1 Lifting Devices

The Model 880 transport package has no lifting device but can be lifted by grasping the steel welded cylinder with two hands. The optional plastic jackets incorporate handles to be used for lifting and carrying. The plastic jacket handles were tested and proven in Test Plan Report 115 Rev 1 and Test Plan 188 Report #1 Rev 12 (See Section 2.12) to withstand a static load of 125 times the package weight without failure.

The 1-1/4-inch diameter hole through the side of the shell cylinder at the lock end could possibly be used as a hoisting point. When lifted from this hole, the minimum factor of safety is 40 against yielding.

If the jacket or hoisting point feature were to fail, it would not affect the shield container and source wire security. As a result, the package safety would not be compromised. Therefore, the lifting devices comply with the requirements of 10 CFR 71.45(a).

2.5.2 Tie-Down Devices

The Model 880 has no system of tie down devices that are a structural part of the transport package. The package could possibly be tied down using the 1-1/4 inch hole, but is not recommended. This hole can withstand a g-force equal to a static force 11 times the weight of the package when applied in tension. At this force, a factor of safety of 4 exists before yielding. As demonstrated in Test Plan Report 115 (Section 2.12) Version 1 of the package handle if used as a tie down can withstand 125 times the weight of the package without failure. As demonstrated in Test Plan Report 188 (Section 2.12), the handle on Version 2 of the package jacket, if used as a tie down, can withstand 25 times the weight of the package without failure. There are no other tie-down features that are part of the structure of the package. The package can be blocked and braced according to standard transportation practices.

2.6 Normal Conditions of Transport

2.6.1 Heat

The heat source for the Model 880 Series transport packages are listed in Table 1.2.B. Iridium-192, supplies approximately 8.6 milliwatts per Curie based on assuming a decay energy of 1.46 MeV/decay. The thermal evaluation for the heat test is described in Section 3 and is based on the decay energy of Ir-192 as this is greater than Se-75 (see Table 1.2.B).

Assuming the entire decay heat, 1.3 watts, is absorbed by the package, this would result in a worst case package surface temperature of 47°C (117°F) (Section 3.4.1.2). Accounting for solar heating effects (Section 3.4.1.1), the maximum temperature of the package surface was calculated to be 88°C (190°F).

2.6.1.1 Summary of Pressures and Temperatures

Table 2.6.A: Summary Temperatures Normal Transport

Temperature Condition	Model 880 Series	Comments
Insolation (38°C in full sun)	65.4°C (149.6°F)	Section 3.4.1.1.
Decay Heating (38°C in shade)	47°C (117°F)	Section 3.4.1.2

As all components are vented to ambient, no pressure will build up in the package under Normal Transport conditions that would adversely effect package performance or integrity. Evaluation of pressures for this package are contained in Section 3.4.2 and summarized in Table 3.1.B.

2.6.1.2 Differential Thermal Expansion

Expansion of the outer steel shell circumference during Normal Transport is approximated by:

$$E = \pi D \alpha \Delta T$$

Where: D = Diameter of the outer shell (5 in)
α = Coefficient of Thermal expansion
ΔT = Cold temperature differential (from -40°F to 65°F)
ΔT = Hot temperature differential (from 65°F to 150°F)

Substituting we get: $E = \pi$ (5 in)(9.9μin/in°F)(105°F) = 0.016 in (cold)
$E = \pi$ (5 in)(9.9μin/in°F)(85°F) = 0.013 in (hot)

Manufacturing tolerance on this component is ±1/16 inch, therefore the thermal expansion encountered during Normal Transport will be insignificant with respect to the manufacturing tolerances of the package.

Reference: "American Society for Metals, Volume 1", 10th Edition.

2.6.1.3 Stress Calculations

As shown in Section 2.6.1.2, thermal differentials will have no adverse effect on the package. Mechanical loads at the maximum weight of the series (55 lbs) are distributed across the central 1/3 of the package body and are small compared to the yield strength of the steel (30,000 psi – See Table 2.2.A).

Inner diameter of body = (5 in – 2(0.065 in)) = 4.87 in
Area of Central 1/3 of body cylinder = (4.87 in)(4 in) = 19.48 in^2
Stress on drum bottom = 55 lbs/19.48 in^2 = 2.8 psi

This material stress is insignificant to the yield strength of the outer stainless steel cylinder.

2.6.1.4 Comparison with Allowable Stresses

All stresses calculated in Section 2.6.1 are well below strengths for the materials of construction. Further, the Model 880 Series package was fully tested and passed under Normal Conditions of transport. It is therefore concluded that the Model 880 Series package will satisfy the performance requirements specified by the regulations.

2.6.2 Cold

An ambient air temperature of –40°F in still air and shade has no effect on the safety of the package. The safety materials: stainless steel, titanium, tungsten and depleted uranium retain their mechanical properties at this temperature. Thus, it is concluded that the Model 880 transport package will withstand the normal transport cold condition.

2.6.3 Reduced External Pressure

The Model 880 Series transport packages are open to the atmosphere and contains no components which could create a differential pressure relative to atmospheric conditions or components within the package. The authorized contents are special form source capsules that meet a minimum ANSI N542-1977 and ISO 2919-1999 classification of Class 3 for pressure. This classification is more limiting than the reduced external pressure requirement as it covers 25 kN/m^2 to $7MN/m^2$. Therefore, the reduced external pressure requirements of 3.5 psi in 10 CFR, 8.7 psi (60 kPa) in 49 CFR and IAEA will not adversely affect the package containment.

2.6.4 Increased External Pressure

The Model 880 Series transport packages are open to the atmosphere and contain no components which could create a differential pressure relative to atmospheric conditions. The authorized contents are special form source capsules that meet a minimum ANSI N542-1977 and ISO 2919-1999 classification of Class 3 for pressure. This classification is more limiting than the reduced external pressure requirement as it covers 25 kN/m^2 to 7 MN/m^2. Therefore, the increased external pressure requirements of 20 psi in 10 CFR 71 will not adversely affect the package containment.

2.6.5 Vibration

The lock assembly on the Model 880 Series package is secured using the same fasteners as are used on the Model 660 devices (Reference Certificate of Compliance USA/9283/B(U)). The Model 660 devices have been use in transport for over 20 years without incident caused by vibration.

The shield in the Model 880 Series packages is attached to the brackets by titanium pins. These pins are secured by stainless steel cotter pins. Cotter pins are routinely used in high vibration situations (i.e. wheel bearing nut retention) and will easily withstand vibration incident to transport.

The compact profile of the package ensures a limited affect from transport vibration and acceleration to critical components of the device. The lock attachment screws and end plate screws are tightened to a prescribed torque to prevent unintentional release even after repeated use. It is therefore concluded that the Model 880 Series packages will withstand vibration normally incident to transport.

2.6.6 Water Spray

The Model 880 Series transport packages are constructed of water-resistant materials throughout. Therefore, the water spray test would not reduce the shielding effectiveness or structural integrity of the package.

2.6.7 Free Drop

A total of six test specimens have been tested and evaluated for compliance to these requirements. Four units were tested as described in Test Plan Report 108 to evaluate the non-jacket and Version 1 jacket configurations and two additional units were tested as described in Test Plan Report 186 #1 to evaluate the Version 2 jacket configuration (Section 2.12). Justification for drop test orientations and test conditions are contained in Test Plan 108 and Test Plan 186 (Section. 2.12). The test units were subjected to the 1.2 meter (4 foot) free drop followed by the hypothetical accident 9 m drop and puncture bar drop tests.

Drop orientation impact locations for the 1.2 m free drop included the lock cover and cylinder lip, the cylinder bottom surface, the cylinder left side surface and the lock cover. As seen in Test Reports 108 and 186 (Section 2.12), the test units sustained some damage but remained fully functional with the sources remaining secured and shielded after testing. Radiation profiles performed at the conclusion of all the testing showed that there was no significant increase in radiation levels from any of the test units. The Model 880 Series package maintained its structural integrity and shielding effectiveness under the normal transport drop test conditions and the packages comply with the requirements of this section.

2.6.8 Corner Drop

This test is not applicable, as the transport package does not transport fissile material, nor is the exterior of the transport package made from either fiberboard or wood.

2.6.9 Compression or Stacking

Test Plan and Report 100 (Section 2.12) documents that Test Specimens P01 and P02 were subjected simultaneously to a compressive load of 459 lbs (209 kg) for a period of 24 hours. This exceeds five times the maximum transport package weight of 46 lbs for the heaviest version of the Model 880 (without the optional jacket). The actual compressive weight of 459 lbs (209 kg) is greater than 13 kPa (2 lb/in^2) multiplied by the vertically projected area of the transport package.

Following the test, no damage to the specimens was observed. Radiation profiles performed at the conclusion of the test showed no significant increase in radiation levels. The Model 880 series package maintained its structural integrity and shielding effectiveness and demonstrated that the packages comply with the requirements of this section.

2.6.10 Penetration

Test Plan and Report 100 (Section 2.12) documents that Test Specimen P01 was subjected to the penetration test. The penetration bar impacted on the top, exterior of the steel cylinder at the point where the shield is closest to the steel cylinder (see Figure 2.6.A).

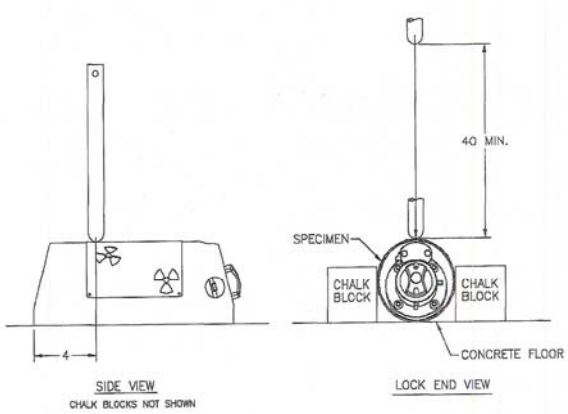

Figure 2.6.A – Specimen P01 Orientation for the Penetration Test

The penetration bar impacted as intended and caused minor damage to the steel cylinder. Radiation profiles performed at the conclusion of the test showed no significant increase in radiation levels. The Model 880 series package maintained its structural integrity and shielding effectiveness and demonstrated that the packages comply with the requirements of this section.

2.7 Hypothetical Accident Conditions

Sections 2.7.1 through 2.7.5 summarize evaluations and testing for the hypothetical accident conditions of transport tests. Section 2.7.8 summarizes the results of this testing. The test sequence as specified in 10 CFR 71.73 was determined to be the order which would result in the maximum damage to the package, considering the subsequent application of the fire test, because the 880 weldment provides containment and protection to the depleted uranium shield. This weldment protects the shield from damage during the puncture test and also limits shield degradation due to oxidation during the thermal test. The intention of the 30 ft drop was to breach the 880 weldment and/or remove the lock assembly which could allow aggregate damage during the subsequent puncture and thermal testing. Performance of the puncture test after the 30 ft drop test allows for additional damage to an area weakened by the 30 ft drop, thereby possibly creating or expanding any breach in the containment which would make the container shield susceptible to oxidation during the thermal testing which would produce the worst case potential damage to the containment system.

A total of six test specimens have been tested and evaluated for compliance to these requirements. Four units were tested as described in Test Plan Report 108 to evaluate the non-jacket and Version 1 jacket configurations and two additional units were tested as described in Test Plan Report 186 #1 to evaluate the Version 2 jacket configuration (Section 2.12). The drop of test units from Test Plan 186 were conducted with the test specimens at or below -40°C (-40°F) to evaluate the effect of the cold temperature on the jacket material. Justification for drop test orientations and test conditions are contained in Test Plan 108 and Test Plan 186 (Section. 2.12).

2.7.1 Free Drop

2.7.1.1 End Drop

This orientation was used for Test Specimens TP108(B), TP186(A) and TP186(B) and the orientation is shown in Figure 2.7.A. Results of this testing for TP108(B) produced one broken rear plate security screw, deformation of the steel cylinder and the rear plate puckered. Test unit TP186(A) produced cracks in the jacket, a slight bend to the rear plate, and damage to the lock cover after testing. Test unit TP186(B) caused the jacket to shatter into 5-6 major pieces after impact and caused bending to the jacket mounting screws. Some additional damage was also received by the lock assemblies and weldment shell. In all cases the source remained secured and the shielding intact. Radiation profiles performed at the conclusion of this and subsequent testing showed no significant increase in radiation levels and that the package had maintained its structural integrity.

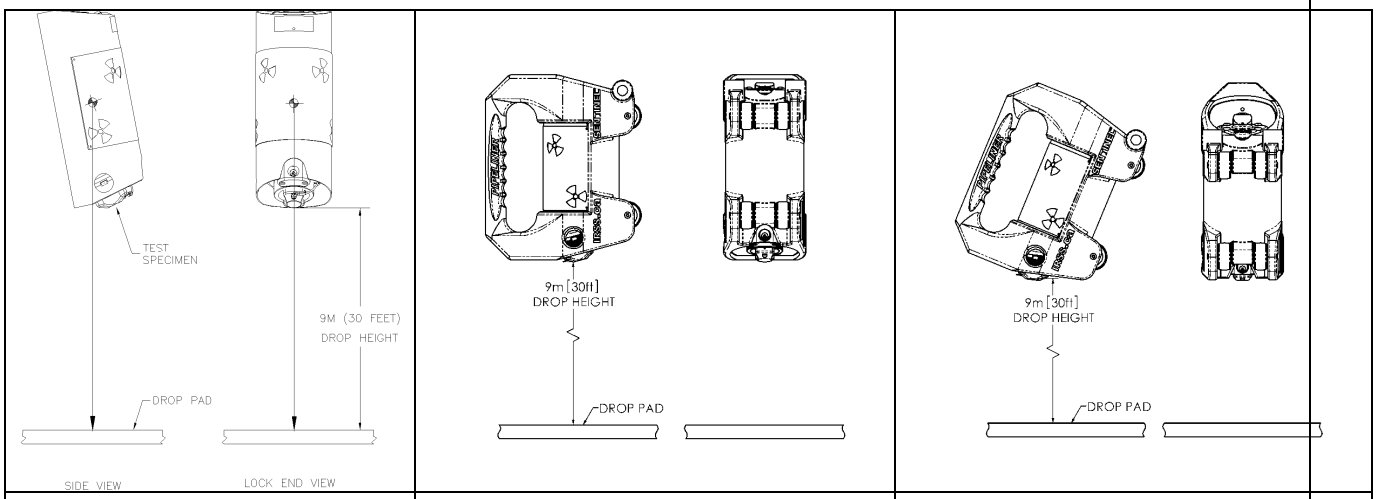

TP108(B)	TP186(A)	TP186(B)

Figure 2.7.A - 9 m Drop Test Orientation – End Drop

2.7.1.2 Side Drop

The side drop was performed on Test Specimens TP108(C) and TP108(D). These drop orientations are shown in Figures 2.7.B and 2.7.C. Results of the testing on specimen TP108(C) produced flattening of the steel cylinder bottom and bending of the front endplate near the bottom. This caused associated binding in movement of the outlet port but did not adversely affect source securement or unit shielding.

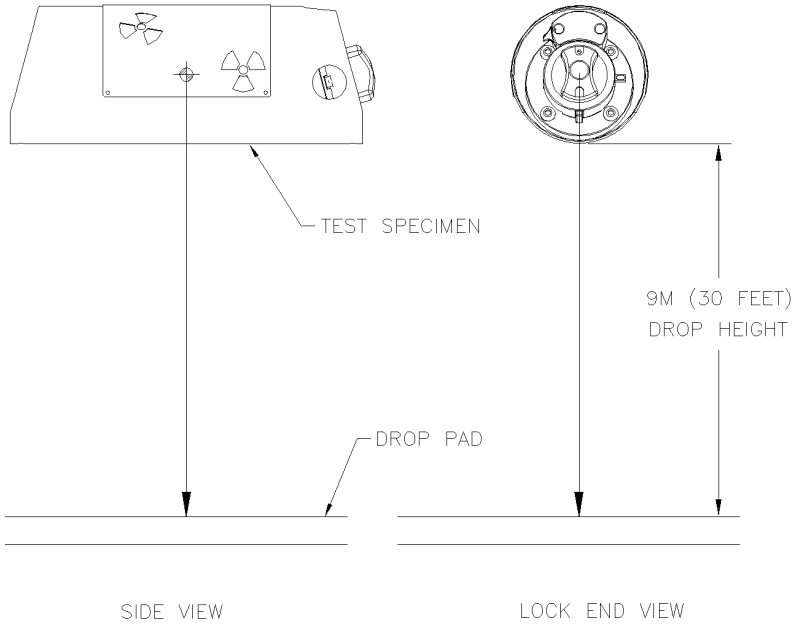

Figure 2.7.B - Model 880 (TP108(C)) 9 m Drop Test Orientation – Bottom Drop

Results of the testing on specimen TP108(D) produced flattening of the left side of the steel cylinder. Radiation profiles performed at the conclusion of the 9 m (and subsequent testing) showed no significant increase in radiation levels for either test unit and demonstrated that the package maintains its structural integrity under these drop orientations.

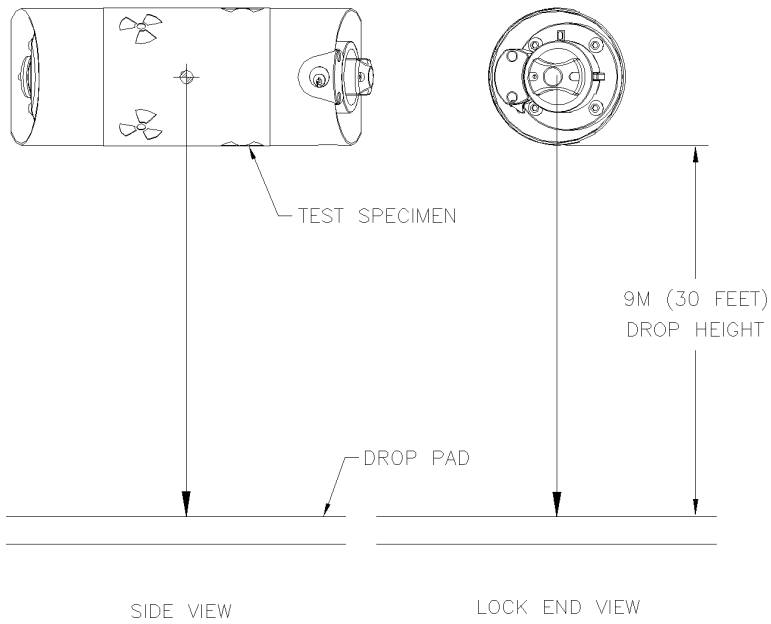

Figure 2.7.C - Model 880 (TP108(D)) 9 m Drop Test Orientation – Left Side Drop

2.7.1.3 Corner Drop

Not Applicable. The 880 Series package does not have corners.

2.7.1.4 Oblique Drops

The oblique drop was not performed. In an oblique drop, the energy generated at impact would be distributed across the initial and secondary impact surfaces. This will produce less force on impact at the initial impact location and the force from the secondary impact will cause deformation of the ends of the steel cylinder without contributing to damage which could result in container failure.

Unlike the End and Side drops described in Sections 2.7.1.1 and 2.7.1.2, an oblique drop is less likely to cause a container failure by the mechanisms identified in Test Plans 108 and 186 (Section 2.12). These included fracture or penetration of the projector weldment, displacement of the shield within the projector weldment, distortion or fracture of the source, and failure of the source lock assembly and/or lock mounting screws.

2.7.1.5 Summary of Results

See Table 2.7.A for additional test unit results summary. In all cases, radiation profiles performed at the conclusion of all testing showed no significant increase in radiation levels for the test units and demonstrated that the 880 Series packages comply with the requirements of this section.

2.7.2 Crush

Not applicable. This package is not used for the Type B transport of normal form radioactive material.

2.7.3 Puncture

Justification for all test unit puncture orientations are included in Test Plan 108 Report and Test Plan 186 Report #1 (Section 2.12). Following the 9 meter (30 foot) free drop, the test specimens were subjected to the puncture test, in accordance with their respective test plan (Section 2.12). The drop of test unit TP186(A) was conducted with the test specimen at or below -40°C (-40°F) to evaluate the effect of the cold temperature on the jacket material. (The jacket material had broken away from the 880 weldment on test unit TP186(B) during the 9 meter (30 foot) drop and so this unit was tested for the puncture test at ambient temperature since the materials remaining on the 880 package would not be significantly affected by testing at -40°C (-40°F).

The drop orientation for each test specimen was selected based on an assessment following the 9 meter (30 foot) drop tests of which orientation would impart the most damage to the specimen.

2.7.3.1 Side Puncture Drop

Test Specimen TP81(C): Test Specimen TP108(C) impacted the puncture bar on the steel cylinder bottom surface (see Figure 2.7.D). Results of this testing produced no new observable damage to the test specimen. Radiation profiles performed at the conclusion of this and subsequent testing showed no significant increase in radiation levels and that the package had maintained its structural integrity.

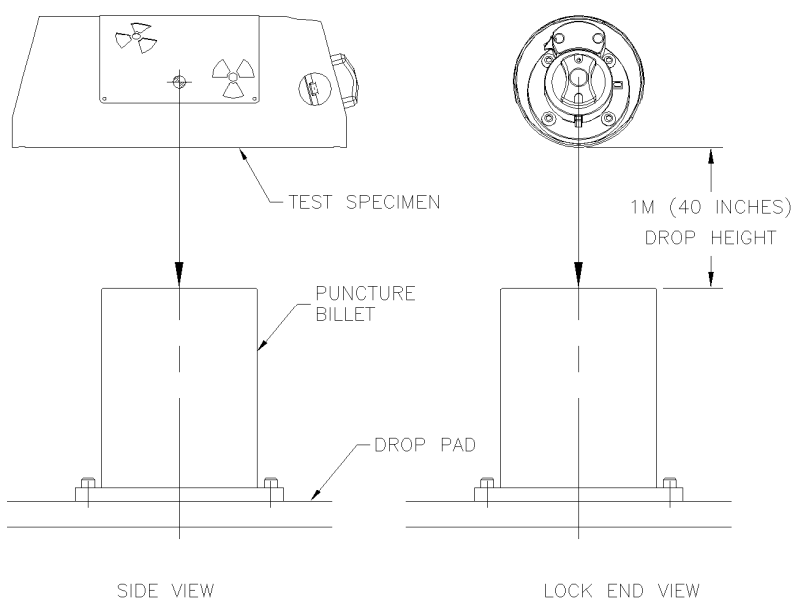

Figure 2.7.D - Model 880 (TP108(C)) Puncture Drop Orientation – Bottom Surface

Test Specimen TP108(D): Impacted the puncture bar on the steel cylinder left side surface (see Figure 2.7.E). Results of this testing produced no new observable damage to the test specimen. Radiation profiles performed at the conclusion of this and subsequent testing showed no significant increase in radiation levels and that the package had maintained its structural integrity.

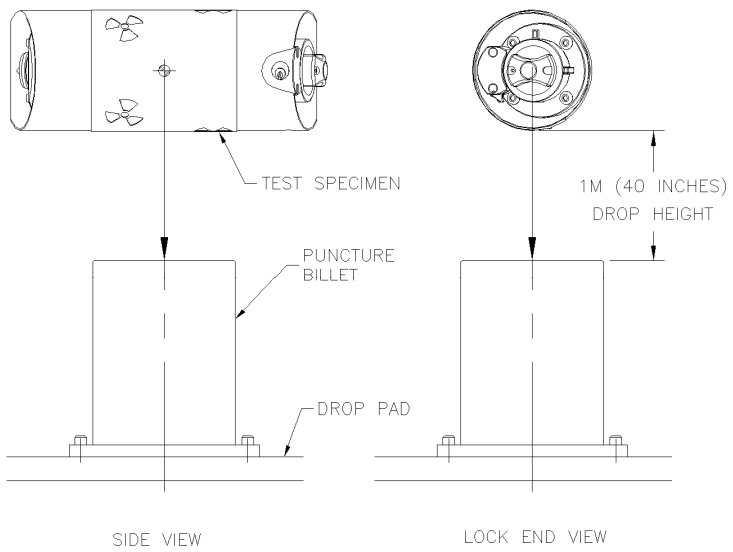

Figure 2.7.E - Model 880 (TP108(D)) Puncture Drop Orientation – Left Side Surface

2.7.3.2 Oblique Puncture Drop

No test specimens were tested in the oblique orientation as potential damage under other drop orientations were assessed to be greater than could be caused in an oblique configuration.

2.7.3.3 End Puncture Drop

Test Specimen TP108(B): Impacted the puncture bar on the lock cover (see Figure 2.7.F). To achieve the designed impact orientation, this test specimen was dropped on the puncture bar twice. Results of this testing produced denting of the lock cover. Radiation profiles performed at the conclusion of this and subsequent testing showed no significant increase in radiation levels and that the package had maintained its structural integrity.

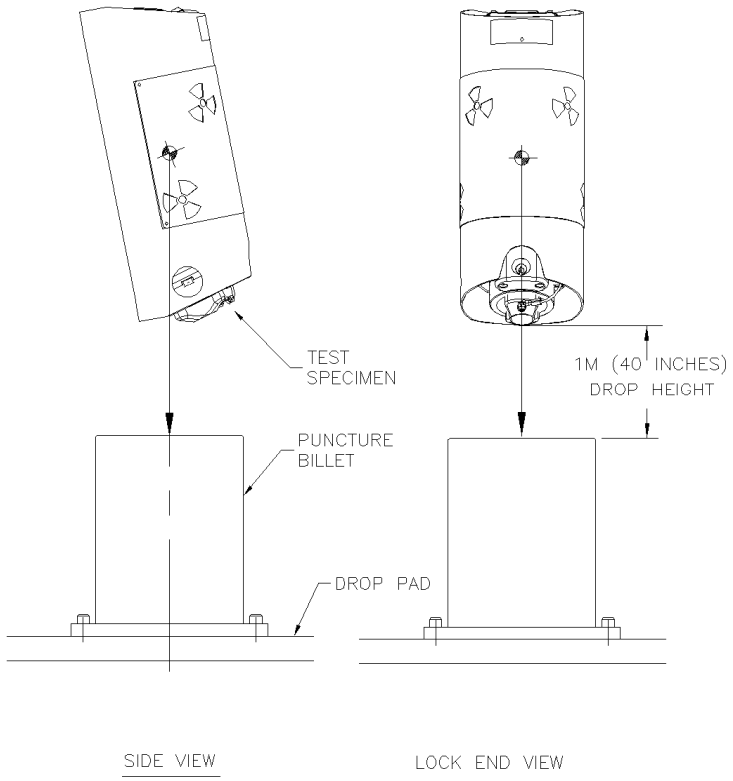

Figure 2.7.F - Model 880 (TP108(B)) Puncture Drop Orientation – Lock Cover

Test Specimen TP108(G): The test unit included the optional jacket (Version 1), and impacted the puncture bar on the lock cover (see Figure 2.7.F). Results of this testing produced no new observable damage to the test specimen. Radiation profiles performed at the conclusion of this and subsequent testing showed no significant increase in radiation levels and that the package had maintained its structural integrity.

Test Specimen TP186(A): Impacted the puncture bar on the lock cover (see Figure 2.7.G) as intended. After the initial impact, the side of the device impacted the post causing additional cracking to the jacket. Results of this testing produced additional denting of the lock cover, but it remained in place. The rear plate casting was also bent further inward causing the source position to move approximately 1/16th of an inch. Radiation profiles performed at the conclusion of this testing showed no significant increase in radiation levels and that the package had maintained its structural integrity.

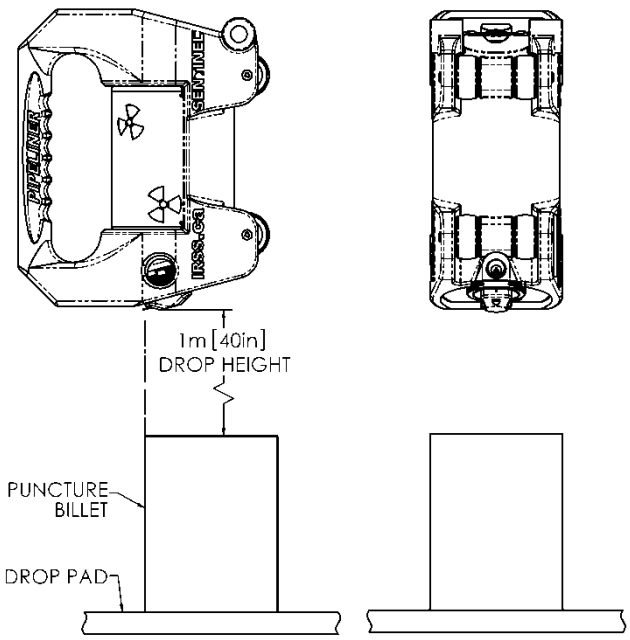

Figure 2.7.G - Model 880 (TP186(A) Jacket Version 2) Puncture Drop Orientation – Lock Cover

Test Specimen TP186(B): Was tested at ambient temperature without the jacket since the jacket had broken away from the 880 weldment during the 9 m (30 foot) drop and the remaining weldment materials are not significantly affected by temperatures of -40°C (-40°F).

The test unit impacted the puncture bar on the lock cover (see Figure 2.7.H) as intended. Results of this testing produced additional denting of the lock cover, but it remained in place. The 880 weldment shell was also bent in areas around the front and rear plates. Radiation profiles performed at the conclusion of this testing showed no significant increase in radiation levels and that the package had maintained its structural integrity

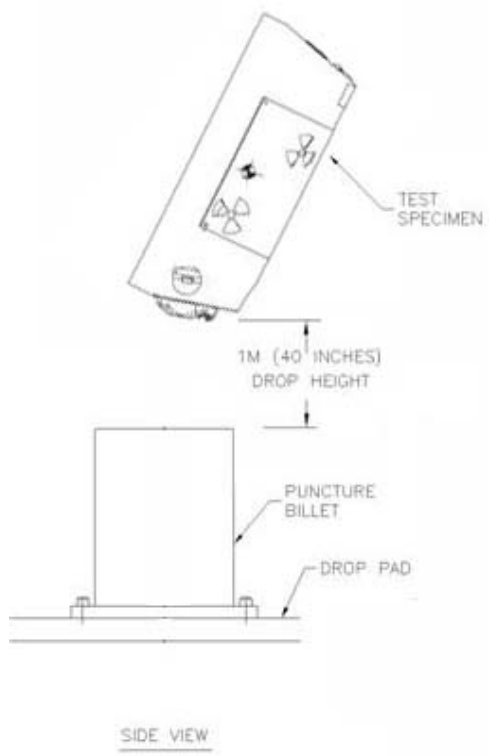

Figure 2.7.H - Model 880 (TP186(B) Jacket Version 2) Puncture Drop Orientation – Lock Cover

2.7.3.4 Summary of Results – Puncture Drop

See Table 2.7.A for additional test unit results summary. Additional inspections were performed using radiography to check for potential internal damage. A more detailed summary is given in the applicable test reports referenced in each section (Section 2.12). In all cases, radiation profiles performed at the conclusion of the puncture testing showed no significant increase in radiation levels for the test units and demonstrated that the 880 Series packages comply with the requirements of this section.

2.7.4 Thermal

Because no damage occurred during the Hypothetical Accident Conditions of Transport Tests that could result in oxidation of the depleted uranium shield, thermal testing was not performed on any of the 880 Series test specimens. Compliance for this requirement was assessed. The assessment demonstrates that the thermal test would not be sufficient to weaken the package and cause its failure under the final profile criteria.

Review of the condition of the test specimens after the drop tests suggests the fire test would have no affect on the resulting radiation measurements if the thermal test was performed. This is justified based on the condition of the test specimens after the drop tests and the properties of the materials used to secure and shield the source within the specimens. Without oxidation of the shield the shielding integrity of the package is maintained and it will meet the requirements of 10 CFR 71.73(c)(4).

2.7.4.1 Summary of Pressures and Temperatures

See Tables 3.1.A and 3.1.B for summary tables of temperature and maximum pressure related to the Model 880 Series package. The Model 880 Series containers are vented to atmosphere. As such, no pressure will build up in the units under Hypothetical Accident conditions.

2.7.4.2 Differential Thermal Expansion

Expansion of the 880 steel cylinder circumference is approximated by:

$$E = \pi D \alpha \Delta T$$

Where:

D = inner Diameter of the steel cylinder = 4.87 in = 0.12 m or
Outer diameter of the depleted uranium shield = 4.38 in = 0.11 m
α = Material Coefficient of Thermal Expansion
ΔT = Fire temperature differential (from 38°C (311°K) to 800°C (1,073°K)

Substituting gives:

$E = \pi(4.87\text{ in})(9.9\ \mu\text{in/in°F})(1{,}372\text{°F}) = 0.2$ in steel
$E = \pi(4.38\text{ m})(28\mu\text{m/m°F})(762\text{°K}) = 0.29$ in depleted uranium

This translates to a diameter increase of 0.026 inches for the steel shell and 0.04 inches for the depleted uranium. Since the depleted uranium modulus of elasticity is less than stainless steel (190 GPa versus 210 GPa, from Mechanics of Materials, Fall 1999) and the expansion rate is approximately the same, the weldment shell will keep the depleted uranium compressed within its volume. The rear plate and front plate attachment screws will expand at approximately the same rate as the steel encasement thus maintaining the security of the source within the package.

2.7.4.3 Stress Calculations

As was shown in Section 2.7.4.2, thermal differentials will have no detrimental effect on the interfaces between the outer steel cylinder, shield or endplates. The Model 880 Series transport packages are open to the atmosphere and contain no components which could create a differential pressure relative to atmospheric conditions. See Section 2.7.4.5 for additional considerations.

2.7.4.4 Comparison of Allowable Stresses

All stresses calculated in Section 2.7.4 are well below strengths for the materials of construction. Further, the Model 880 Series package was fully tested and passed under Normal and Hypothetical Accident Conditions of transport. It is therefore concluded that the Model 880 Series package will satisfy the performance requirements specified by the regulations. See Section 2.7.4.5 for additional considerations.

2.7.4.5 Additional Thermal Analysis

a. Condition of the Test Specimens

Damage to the outer containment was not sufficient to increase oxygen ingress to the shield, build up pressure within the assembly through the pyrolization of the foam, or expand a trapped volume of air within the cylinder. The container is vented to the atmosphere through both the front and rear end plates. These vents will relieve any internal generation or expansion of gases created by the elevated temperatures.

Damage incurred during the drop testing (4 foot, 30 foot and puncture) was minimal, consisting of insignificant deformation of the weldments, lock mounting block and dust cover, slight bowing of the end plates and loss of one rear plate bolt. There were no holes or tears in the cylinder weldment to allow air to circulate through the package. None of the damage significantly increased, or created new, pathways for the ingress of oxygen. Oxygen ingress has been shown empirically to be the primary contributing factor in the oxidation of depleted uranium shields during thermal testing (see Section 2.12 regarding previous testing on the 650L, 680-OP and 660 packages). Further analysis against shield degradation due to oxidation is contained in Section 2.7.4.5.b.

Without the possibility of gross shield oxidation, and subsequent shield degradation, failure under the thermal test conditions would require mechanical degradation of the packages' support structure. The Model 880 support structure is predominately of welded stainless steel construction.

The internal support structure for the test specimen shields was intact and fully functional. The internal support structure consists of the shield, cylinder weldment, shield pins, U-shaped brackets, and endplates with rivnuts. The source assemblies were intact, undamaged and secure in the shielded position. The source assembly consists of the source capsule, flexible wire, stop ball and source connector.

The rear plate assemblies remained intact and continued to secure the source assemblies in the shielded position within the package. The securing components of the rear plate assembly consists of the rear plate, lock slide, sleeve, selector ring, selector ring retainer, four #10 machine screws, and four 5/16-18 security screws.

The effect of structural yielding under self-weight at temperature caused by the degradation of mechanical properties of the materials of construction is insignificant. The likely failure modes are further assessed in Sections 2.7.4.5.c.

b. Oxidation of Depleted Uranium (DU) Shielding

Significant oxidation of the depleted uranium does not occur if there is insufficient flow of oxygen available to the shield. Two major contributing factors to limiting this oxidation are the oxygen inhibitive nature of charred polyurethane foam and the packages' ability to contain the foam once charred. This has been demonstrated by thermal testing conducted by QSA Global Inc. in support of previous Type B package submissions described in the following paragraphs.

Under Test Plan 74 (Section 2.12), the Model 660 Series, Specimen D was tested successfully through normal and accidental conditions. Before thermal testing, the unit showed gaps in the outer containment (shell to endplate interface) up to ½ inch wide and 1 inch long. Pyrolized foam was contained within the unit. Although the shield oxidized slightly on the end nearest the largest gap, the unit passed final profile at 0.0047 R/hr at one meter.

Under Test Plan 72-S2 (Section 2.12), in support of Certificate of Compliance number USA/9035/B(U) for the Model 680-OP Series, camera s/n B198 was subjected to thermal testing. Before testing, the unit was intact and essentially undamaged with no gaps between mating surfaces. After the 30 foot and puncture drop tests, ¾ inch long by 1/16 inch wide gaps were present on both sides of the unit at the side plate/shell interface. Thermocouple readings showed temperatures of up to 1000°C on the unit and over 900°C within the depleted uranium shield. The foam was completely pyrolized but was contained within the unit. No oxidation of the shield occurred and the unit passed final profile at 0.330 R/hr at one meter.

Under Test Plan 80 Report (Section 2.12), in support of Certificate of Compliance number USA/9269/B(U) for the Model 650L, test specimen TP80(B) was subjected to thermal testing. The drop tests (30 foot and puncture) caused the outer shell to split completely open and the inner shell to crack, creating a 3 inch long by ½ inch wide gap. Subsequent thermal testing caused pyrolization of all the foam and vaporization in the area of the gap. Some minor oxidation of the shield was also noted. Thermocouples recorded temperatures in the shield of over 900°C and close to 1000°C at the shell. Although the shield oxidized slightly in the area of the gap, the unit passed final profile at 0.028 R/hr at one meter.

As demonstrated in previous thermal testing, minor air gaps in the containment surrounding the shield are insufficient to allow significant oxidation of the depleted uranium shield during the thermal test. The Model 880 Series test specimens had no breach of the shield containment and would therefore prevent oxygen ingress to the shield and any resulting deterioration of the depleted uranium shield during the thermal test.

c. Material Properties at Elevated Temperatures

The melting temperature for all materials of the internal support structure, rear plate assembly and source assembly are above the thermal test temperature of 800°C. The thermal expansion for the internal support structure materials is less than the design clearance allowed for assembly. Further, the stainless steel and titanium components of the internal support structure, rear plate assembly and source assembly retain about 30% and 60% of their room temperature strength at 800°C.

The load condition for the thermal test is for the internal structure to support the static weight of the shield in suspension. The dynamic impact nature of the drop tests can subject the structure to a force over 100 times the static weight of the shield. This means the strength of the materials used in the structure would need to decrease by two orders of magnitude or to about 1% of their strength at room temperature. The 30-minute thermal test is not long enough for significant creep deformation to occur in the structure.

(1) Tear Out of the Shield Support Pin

If the device were suspended with its diametrical axis in the vertical, the weight of the shield would be supported by the front and rear brackets. Tear out of the materials under the pin can be assessed by assuming one (1) pin supports the entire shield.

Tear out Area = 0.4 in X 0.065 in (material thickness) X 4
= 0.104 in^2

Weight of Shield = 34.4 lbs. (max)

Therefore: 34.4 lbs. / 0.104 in^2 = 331 psi

The strength of 304 stainless steel at 800 C° = ~15,000 psi

(Reference: ASM Stainless Steels, J.R. Davis ed.,1994, p. 508)

This gives a factor of safety of approximately 45 against failure.

(2) Depleted Uranium Cracking around the Titanium Pin

The pin is in poor contact with the supporting brackets (0.060 inches thickness each side) and is in intimate contact with the shield (possible line to line). The heat transmitted through conduction from the outer shell through the bracket to the pin will be dissipated by the mass of the shield at the point of contact. Whereas upon heat up of the shield, the heat flow from the shield to the pin will be substantial. Therefore, the shield and pin should be at approximately the same temperature throughout the thermal test. Based on this assumption, the relative

expansion coefficients for the materials are compared to determine if the pin will exert damaging force on the depleted uranium shield.

The volume expansion coefficient of materials is taken to be approximately three times the linear expansion coefficient (Reference: ASM Material Properties Handbook Titanium Alloys, ed. Rodney Boyer, Gerhard Welsch, E.W. Collings, 1994, p. 516). As such:

Linear expansion coefficient – Titanium 11.0E-6 in/in · C°
(Reference: ASM Metals Handbook Desk Edition, ed. Howard E. Boyer, Timothy L. Gall, 1985, p. 1.4)

Linear expansion coefficient – Depleted Uranium 12.0E-6 in/in · C°
(Reference: Universal reference calculator, TAD Technical Services Corp)

Based on the linear expansion coefficients, the two materials will expand volumetrically at approximately the same rate. This will prevent the pin from exerting force onto the inside diameter of the hole in the shield. Therefore, the material around the pin will remain intact and the shield will remain secured to the brackets.

(3) De-Attachment of the Rear Lock Assembly

On the test unit where a security screw failed, three (3) of the four (4) security screws remained intact after the drop and puncture testing. These screws retained the rear lock assembly to prevent the source from movement relative to the shield. If the device were suspended as in 2.7.4.5.c(1) with the lock assembly downward, the self-weight of the assembly would put all three screws in tension. At temperature, the stresses would be:

Stress area of 5/16-18 screw: 0.0524 in^2
(Reference Manual of Steel Construction , 7th Edition, page 4-125)

Total stress area (3 screws): $3(0.0524\ in^2) = 0.157\ in^2$

At 15,000 psi*, the screws will support a weight of:

$$15{,}000\ psi\ (0.157\ in^2) = 2{,}358\ lbs.$$

The lock assembly weighs approximately two (2) lbs. Therefore, the lock assembly will remain attached and undisturbed as the remaining screws can easily support the weight.

* The use of 15,000 psi is based on the yield strength of the stainless steel security screws at temperature.

d. Conclusions

The test specimens were subjected to the 9 m drop and 1 m puncture tests in accordance with Test Plan 108 (Section 2.12) and Test Plan 186 #1. These test plans conform to the requirements in 10 CFR Part 71 and IAEA TS-R-1 for Type B(U) transport packages.

The test specimens demonstrated that the Model 880 Series transport packages satisfy the test requirements of their respective Test Plans as demonstrated in Test Plan Reports 108 and 186 #1 (Section 2.12). The Model 880 Series package, with either of the optional jackets, does not adversely affect the results of these tests. This conclusion is drawn from the drop test results and thermal analysis as supported by the test data, test inspection data and damage assessments.

Based on the previous empirical data and analyses, we conclude that oxidation of the shield will not occur, the structural integrity of the package will remain intact and the containment of the source will not be affected. As such, the Model 880 complies with the requirements of this section.

2.7.5 Immersion - Fissile Material

Not applicable. This package is not used for transport of Type B quantities of fissile material.

2.7.6 Immersion - All Packages

The Model 880 Series transport packages are open to the atmosphere and contain no other components that would create a differential pressure under immersion. All materials are impervious to water and would not be affected.

The primary containment system in these packages is a special form source, which minimally meets the ANSI N43.6 and ISO 2919 requirements for Class 3 pressure testing. Therefore the Model 880 Series could withstand the immersion test criteria since the Class 3 pressure test requirements are in excess of the required 150 kPa (21.7 lb ft/in2).

2.7.7 Deep Water Immersion Test (for Type B Packages Containing More than 10^5 A_2)

Not applicable. This packaged does not transport normal form radioactive material in quantities exceeding $10^5 A_2$.

2.7.8 Summary of Damage

Table 2.7.A summarizes the results of the Normal Conditions of Transport and Hypothetical Accident testing performed on the Model 880 Series, in the sequence that the tests were completed.

Table 2.7.A: Summary of Damages During Testing

Test Specimen	Test	Weight	Actual Impact Point	Damage
TP108(B)	4-foot free drop	44.2 lbs	Lock cover & shell lip	• Shell bottom rear lip bent.
	30-foot free drop	44.4 lbs	Lock cover & shell lip	• One rear plate security screw broken. • Rear plate puckered. • Shell lip bent further.
	Puncture drop #1	44.4 lbs	Lock cover	• Lock cover dented.
	Puncture drop #2	NA	Lock cover	• Lock cover dented.
	Damage After all Testing			
	• Shell at rear end is bent in toward lock by about 1 inch at bottom. • Shell at front end has two spot dimples about 3/16 inch deep. • Rear plate is puckered in at selector ring about 1/16 inch. • Rear plate security screw at top right is broken. • Rear plate security screw at top left & bottom right is bent. • Rear plate security screw at bottom left slightly is bent. • Lock cover is dented 3/16 inch at three spots. • Rear plate tube feature is slightly bent but intact. • Three rear plate security screws are slightly bent but intact. • One rear plate security screw broken end remained in the rivnut.			
TP108(C)	4-foot free drop	44.3 lbs	Shell bottom surface	• Shell bottom flattened. • Shell rear lip bent in.
	30-foot free drop	44.4 lbs	Shell bottom surface	• Shell bottom flattened further. • Shell rear top bent. • Front endplate bent near bottom. • Outlet port binds.
	Puncture drop	44.4 lbs	Shell bottom surface	• None observed.
	Damage After all Testing			
	• Shell bottom is depressed about 3/16 inch. • Shell top has two spot dimples about 3/16 deep. • Front plate knob pin is bent about 3/16 inch. • Shield contacts the shell at the impact surface.			
TP108(D)	4-foot free drop	44.4 lbs	Shell left side	• Shell left side flattened.
	30-foot free drop	44.3 lbs	Shell left side	• Shell left side flattened further.
	Puncture drop	44.3 lbs	Shell left side	• None observed.
	Damage After all Testing			

Test Specimen	Test	Weight	Actual Impact Point	Damage
	• Shell left side is depressed about 1/8 to 1 inch. • Shell right side at rear end is bent about 3/16 inch. • U-shaped bracket is bent on the left side about 1/8 inch.			
TP108(G) (with Version 1 jacket)	4-foot free drop	48.8 lbs	Lock cover	• Lock cover dented.
	30-foot free drop	48.8 lbs	Lock cover & shell side lip	• Shell rear side lip bent. • Two jacket rivets broken. • Label rivets missing.
	Puncture drop	48.8 lbs	Lock cover	• None observed.
	Damage After all Testing			
	• Shell left side at rear end is bent about 5/8 inch. • Shell left side at front end is bent about 3/16 inch. • Rear plate security screw at top right is slightly bent. • Jacket rivets on left side are broken. • Lock cover is dented about 3/16 inch. • Lock cover pin at bottom is loose and can be removed. • Label rivets missing. • No apparent internal damage.			
TP186(A) (with Version 2 Jacket – Unit Tested at -40°C)	4-foot free drop	54 lbs	Lock cover	• Crushed and cracked lock cover. • Broke head off one lock cover mounting screw.
	30-foot free drop	54 lbs	Lock cover	• Cracks in jacket. • Rear plate bent in 1/8”. • Lock cover broken. • Lock cover pin broken.
	Puncture drop	54 lbs	Lock cover	• Additional cracks in jacket. • Additional lock cover damage. • Additional damage/bending to rear plate. • Source position moved ~1/16”.
	Damage After all Testing			
	• Plunger key lock would not operate • Lock plate mounting screws bent and threads stripped during removal. • Lock plate required use of hammer and pry bar to remove from 880. • Lock cover pin mounting holes were deformed. • Lockslide was bent and jammed between rear plate and selector ring retainer. • Source wire assembly female connector bent/damaged but source remained locked and secured in shielded position after testing.			
TP186(B) (with	4-foot free drop	54 lbs	Lock cover	• Dented lock cover. • Cracked jacket.

Test Specimen	Test	Weight	Actual Impact Point	Damage
Version 2 Jacket – Unit Tested at -40°C for all but Puncture)	30-foot free drop	54 lbs	Lock cover	• Jacket shattered. • Jacket mounting screws bent the 880 shell. • Additional damage to lock plate and lock assembly. • 880 shell bent inward.
	Puncture drop	54 lbs	Lock cover	• Additional denting to lock cover. • Additional bending to 880 shell.
	Damage After all Testing			
	• Plunger key lock would not operate • Lock cover assembly was broken and pins misaligned. • Key lock pin deformed and jammed in selector ring.			

Based on these results, it is concluded that the Model 880 Series transport package maintains structural integrity and shielding effectiveness during Hypothetical Accident Conditions and Normal Conditions of Transport.

2.8 Accident Conditions for Air Transport of Plutonium or Packages with Large Quantities of Radioactivity

Not applicable. This package is not used for transport of plutonium or normal form radioactive material. This package is also not used for transport of special form material in quantities ≥ 3,000 A_1.

2.9 Accident Conditions for Fissile Material Packages for Air Transport

Not Applicable. This package is not used for transport of Type B quantities of fissile material.

2.10 Special Form

The Model 880 Series transport package is designed for use with a variety of special form source capsules attached to a flexible source wire assembly. All special form sources transported in the Model 880 Series will meet a minimum ANSI N43.6 and ISO 2919 Classification of 3 for pressure testing.

Typical special form sources transported in this container and their associated source wire assembly are shown in Table 2.10.A.

Table 2.10.A: Typical Special Form Capsule Transport Information

Special Form Capsule	Radionuclide	Special Form Reference	Typical Source Wire Assembly

			Identification
875 Capsule	Ir-192	USA/0392/S-96	A424-9
875 Series	Ir-192	USA/0335/S-96	A424-23
X540/1	Se-75	USA/0502/S-96	A424-25 & A424-25W

Based on performance testing, any source capsule that has been tested and achieved special form classification from a Competent Authority and also has achieved an ANSI/ISO Pressure Classification rating of 3 can be safely transported in the Model 880 Series package so long as the source wire assembly properly locates the source capsule within the package radiation shielding. Therefore any compatible source capsule/source wire assembly meeting these criteria should be approved for transport without requirement of amendment to the Type B(U) certification.

Examples of typical special form certifications, including the current approved capsule drawings, are included in Section 2.12.

2.11 Fuel Rods

Not applicable. This package is not used for transport of fuel rods.

2.12 Appendices

2.12.1 Test Plan and Report 100 (Feb 2000)
2.12.2 Test Plan 108 Issue 5 (Jul 2000)
2.12.3 Test Report 108 Minus Appendices A-C (Aug 2000)
2.12.4 Test Plan 115 (Feb 2001)
2.12.5 Test Plan Report 115 Minus Appendices (March 2001)
2.12.6 Test Plan Report 125 Rev B (Mar 2003)
2.12.7 Test Plan Report 74 (Feb 1998)
2.12.8 Test Plan 80 Rev 1 (Mar 1999)
2.12.9 Test Plan 80 Report Minus Manufacturing Records (Jun 1999)
2.12.10 Test Report #1 for Test Plan 188 Rev 1 (minus Sections 7.3 – 7.5)
2.12.11 Test Report #1 for Test Plan 186 Rev 1 (minus Sections 8.4 & 8.5)
2.12.12 USDOT Special Form Certificate USA/0392/S-96 Rev 10
2.12.13 USDOT Special Form Certificate USA/0335/S-96 Rev 9
2.12.14 USDOT Special Form Certificate USA/0502/S-96 Rev 7

2.12.1 Test Plan and Report 100 (Feb 2000)

SENTINEL

TEST PLAN NO. 100

TEST PLAN COVER SHEET

TEST TITLE: NORMAL TRANSPORT TESTS

PRODUCT MODEL: MODEL 880

ORIGINATED BY: S. Gianni	DATE: 8 FEB 00

TEST PLAN REVIEW

ENGINEERING APPROVAL:	DATE: 15 FEB 00
QUALITY ASSURANCE APPROVAL: D.W. Kurtz	DATE: 17 Feb 00
REGULATORY APPROVAL: C. Rongha	DATE: 15 Feb 00

COMMENTS:

TEST RESULTS REVIEW

ENGINEERING APPROVAL:	DATE: 25 FEB 00
QUALITY ASSURANCE APPROVAL: David W. Kurtz	DATE: 25 Feb 00
REGULATORY APPROVAL:	DATE: 25 FEB 00

Amersham QSA

TABLE OF CONTENTS

1.0 PURPOSE 2

2.0 PACKAGE DESIGN DESCRIPTION 2

3.0 FAILURES OF INTEREST 3

4.0 TEST CONDITIONS AND ORIENTATIONS 4

5.0 CHANGES TO TEST CONDITIONS OR ORIENTATIONS 7

6.0 PASS AND FAIL CRITERIA 7

7.0 TEST EQUIPMENT 7

8.0 TEST SPECIMEN 7

9.0 TEST PROCEDURE 7

APPENDIX A: DRAWINGS AND FIGURES. 9

APPENDIX B: WORKSHEETS. 10

Model 880 Type A Transport Tests

1.0 Purpose

The purpose of this test is to demonstrate the Model 880-transport package meets the normal transport requirements of 49CFR173, 10CFR71, and IAEA Safety Series 6 (As amended 1990).

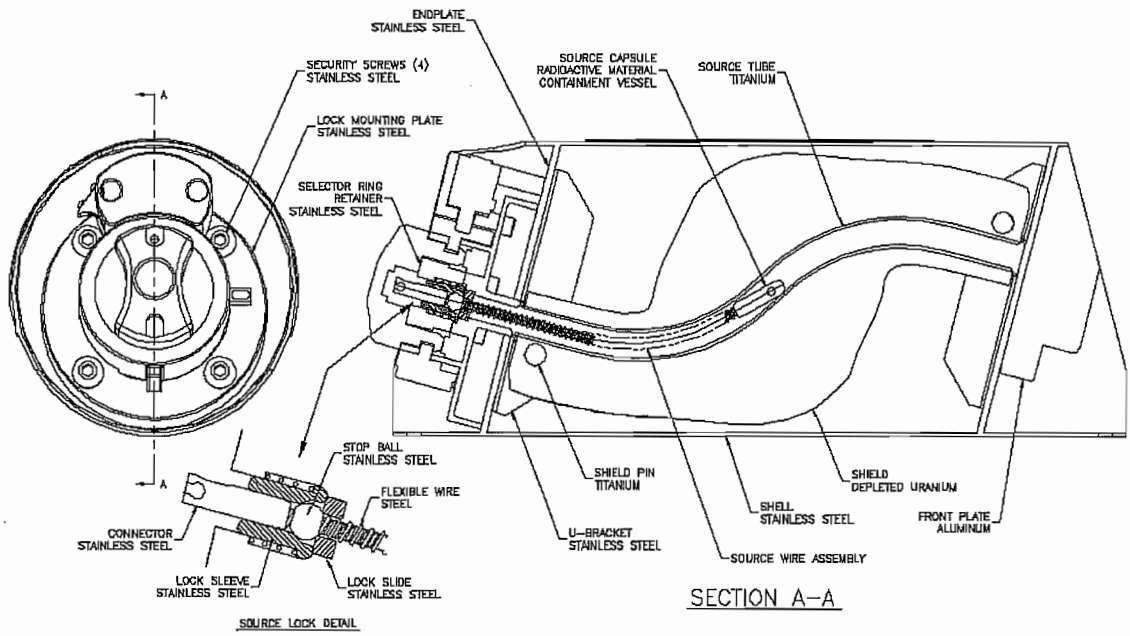

Figure 1. Model 880-Transport Package.

2.0 Package Design Description

The transport package safety features for the Model 880 are described in figure 1. The radioactive material, sealed in a special form source capsule, is located, secured and protected in the package by the following component relationships.

The capsule, stop ball and connector are swaged to a flexible steel wire. These four components form the source wire assembly. The stop ball is held securely by the lock slide and sleeve of the lock assembly. The sleeve prevents the stop ball from being pulled through the rear of the package, while the lock slide prevents the stop ball from being pushed out of the front. Both the sleeve and lock slide are captured by the selector ring retainer and lock mounting plate.

The selector ring retainer is fastened to the lock mounting plate with four, #10, stainless steel machine screws. The lock mounting plate is bolted to the welded endplate of the cylinder shaped shell housing using four, 5/16-18 by 1-1/2 inch long stainless steel security screws.

A U-shaped bracket welded to the endplate holds a 3/8-inch diameter titanium pin that connects the shield within the U of the bracket. This structure secures the shield to the welded package. Copper spacers prevent

contact of the depleted uranium shield with the stainless steel components. This method of shield attachment is repeated at both ends of the shell.

The shield is centered in the shell and has the source tube cast into its center. The source tube provides a cavity for the source wire assembly to travel through during use. The capsule with radioactive material is positioned at the center of the ball of the shield within the source tube cavity.

Polyurethane foam fills the air void between the shield and shell inner walls. The foam acts only to prevent the ingress of material into the air void.

The outlet port, located at the front end, serves to block access into or out of the source tube cavity. Four security screws fix the front plate to the shell endplate.

A plastic jacket, not shown in figure 1, may be used to carry the package. This jacket will not be on the specimen for the tests below. Testing without the jacket will not significantly affect the results of the 4-foot drop test; in fact the plastic material and geometry of the jacket will prevent enough damage to the shell to cause failure of the lock mounting plate. The extra drop energy supplied by the 4-pound jacket would be offset by its impact absorption characteristics. The jacket would provide better protection against the penetration bar at its most vulnerable area and would provide additional support to the shell under compression. Therefore testing without the jacket would give more conservative test conditions.

3.0 Failures of Interest

The failures of interest will depend upon the test being performed on the package. Each test will be conducted on the same specimen so as to incur a cumulative damage affect to the package.

The compression test will try to flatten the package to deform the shell enough to shorten the distance from the source to an outer surface measurement point. This may raise radiation measurements above the requirement limits of 200 mR/hr at the surface.

The penetration test will attempt to puncture through the shell housing at its thinnest and most unsupported area. This may reduce the effectiveness of the package and raise radiation levels due to possible access to the inner void of the shell housing. Material thickness and support of other features on the package would prevent sufficient damage from the bar's impact and therefore not considered.

The 4-foot free drop test will try to shear the four lock mounting plate screws upon impact on the bottom edge of the shell at the lock end. This may produce enough deformation to the shell to bend the lock mounting plate and shear the screws. This could remove the source wire assembly from the package or increase radiation levels as a result of relocation of the capsule within the shield.

Two other orientations reviewed for the four-foot free drop are:

1. Shear the shield pins by orientating the shell and shield pins parallel with the impact surface. The pins are designed to take at least a 500-G load upon impact. The estimated load at impact for this drop is about 50G's. Therefore this orientation will not be considered.
2. Bend the U-bracket by orientating the shell and bracket parallel with the impact surface. The shield is less than ¼ -inch from the shell. This prevents sufficient shield travel when you consider the shell deflects to meet the shield upon impact. Therefore this orientation will not be considered.

4.0 Test Conditions and Orientations

The materials used in the construction of the package, see figure 1, retain their mechanical properties within the temperature range of -40 F to +158 F and pressure range of 3.6 psi to 20 psia as specified in the test requirements. Except for the source capsule (tested special form), the package is open to the atmosphere allowing inner and outer pressures to equalize naturally. Therefore testing at ambient conditions, both temperature and pressure would not change the results of these tests and are therefore acceptable initial conditions.

Since the materials of construction are metallic and do not loose strength when exposed to a water spray, the water spray test per 49CFR173.465(b) is not required and will not be conducted.

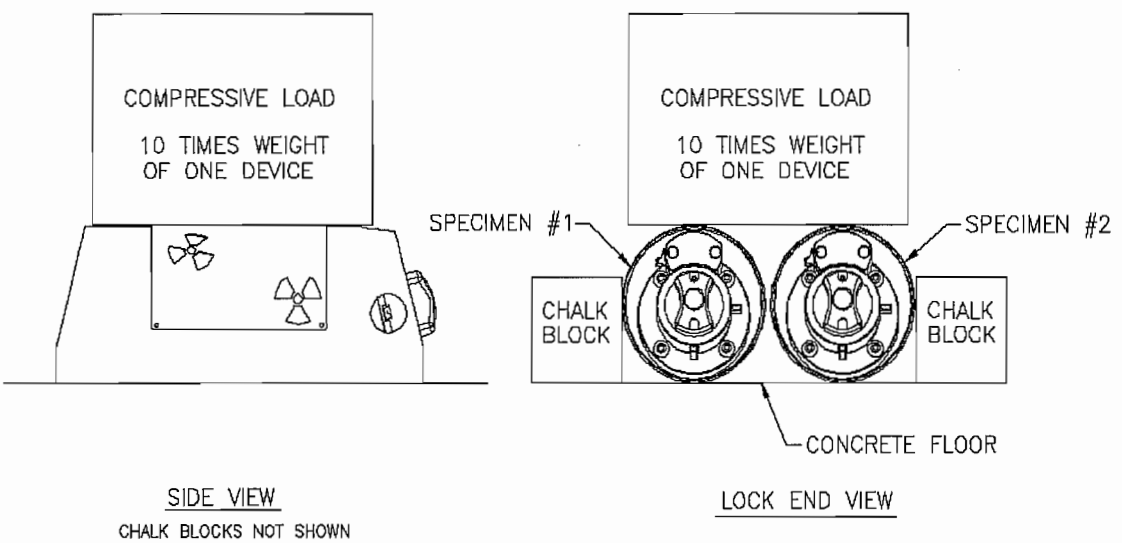

Figure 2. Stacking Test Setup.

Orientation for the stacking test, as shown in figure 2, is with the cylindrical shell housing lying horizontally with its longitudinal surface touching the ground. This would be its natural orientation during transport. The load is distributed opposite the floor contact surface. Two packages will be tested together to provide a stable setup. If this is the case, then the compressive load will be 5 times the weight of each specimen. For example, if the specimen weighs 40 lbs., then the total compressive load for 2 specimen tested together is 5 x 40 x 2 = 400 lbs. The actual compressive weight will be determined at the time of the test.

Blocking or specimen restraint may be used to prevent the specimen from rolling, provided the blocking or restraint does not support the specimen vertically. Use figure 2 as a guide to place the blocks next to the specimen.

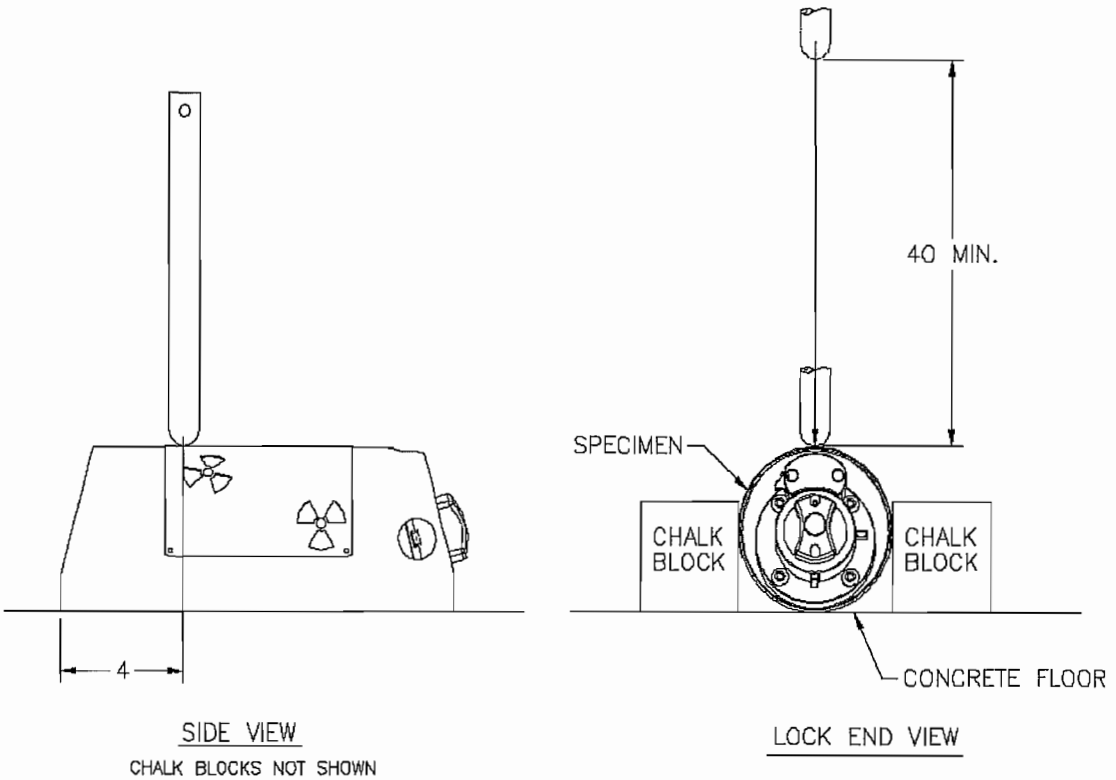

Figure 3. Penetration Test Setup.

Orientation for the penetration test, as shown in figure 3, is with the cylindrical shell lying horizontally with its longitudinal surface touching the ground. The ends of the shell are reinforced by welded endplates and the shield is in close proximity to the housing at the midpoint. The most vulnerable spot for sufficient penetration is at a point about 4 inches from either end of the shell. This point provides the least support for the shell.

Blocking or specimen restraint may be used to prevent the specimen from rolling, provided the blocking or restraint does not support the specimen vertically. Use figure 3 as a guide to place the blocks next to the specimen.

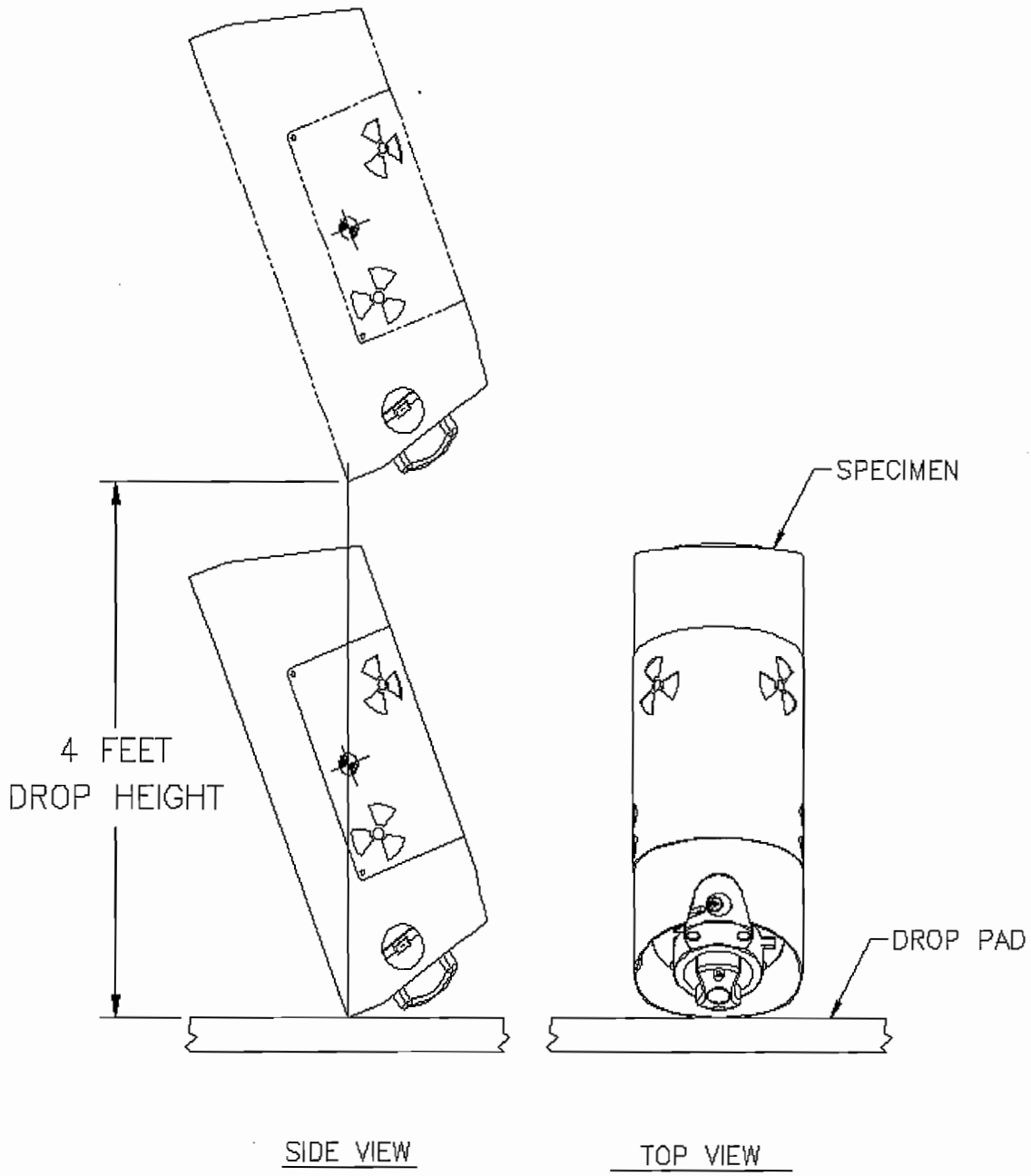

Figure 4. Four-Foot Free Drop Test.

Orientation for the 4-foot free drop, as shown in figure 4, is with the longitudinal axis of the package nearly vertical, but at a slight angle to the impact surface. The impact point is on the bottom edge of the shell at the lock end with the center of gravity directly over that point. This is the most vulnerable spot to produce enough deformation of the housing to bend the lock mounting plate and shear the attachment screws.

5.0 Changes to Test Conditions or Orientations

Changes to the planned test conditions or orientations shall only be done after careful consideration and documented justification. Prior to performing the test, Engineering, Regulatory and Quality Assurance shall approve the justification.

6.0 Pass and Fail Criteria

Post Test Initial Assessments.

- An initial assessment shall be made upon the completion of each test to evaluate the specimen's performance against the requirements of the test.

Post Test Final Assessment.

- A final assessment shall be made upon the completion of the entire test sequence to evaluate the specimen's performance against the test requirements and determine a pass or fail judgement. The specimen(s) shall be considered passing the test requirement, if the following conditions apply to the specimen after being subjected to all three tests:
  1. The source capsule must remain within the source tube, attached to the source wire and undamaged.
  2. The radiation profile results must be less than 200 mR/hr at the package's surface and must not be a significant increase between initial profile measurements and post-test profile measurements. Profile measurements evaluated against type A quantities of radioactive material, in this case 27.0 curies of IR192.

7.0 Test Equipment

Table of key test equipment:

Equipment	Drawing No.	Serial No.	Tolerance	Used on
Weight Scale				All tests
Temperature gage				All tests
Penetration bar	BT10129, Rev. B			Penetration test
Drop pad	AT10122, Rev B			Free drop test

8.0 Test Specimen

The test specimen is clearly described on drawing number TP100 revision A. A minimum of two test specimen shall be manufactured in accordance with drawing TP100 and the AEA Technology QSA Inc. quality assurance system.

9.0 Test Procedure

1. Manufacture and inspect the specimens per the test specimen drawing.
2. Perform and record radiation profile inspections per WI-Q09.
3. Conduct stacking test per 49 CFR 173.465 (d).
   - Record test data, damage descriptions (if any), initial test assessment.
4. Conduct penetration test per 49 CFR 173.465 (e).

- Record test data, damage descriptions (if any), initial test assessment.

5. Conduct 4-foot free drop test 49 CFR 173.465 (c).
   - Record test data, damage descriptions (if any), initial test assessment.
6. Perform and record radiation profile inspections per WI-Q09.
7. Record final test assessment.

Appendix A: Drawings and Figures.

- Test Specimen TP100, Revision A.

Appendix B: Worksheets.

- Compression Test.
- Penetration Test.
- 4-foot Free Drop Test.
- Final Test Assessment.

Compression Test
49 CFR 173.465(d)

Test Specimen:

Drawing No. _____ Rev. _____ Serial Number: _____

Weight: _____ Scale used: _____

Test Setup:

Photograph setup

Use Figure 2 to position the specimen and apply the compressive load.

Setup verified by: _____ Date: _____

Compressive Load:

Weight: _____ Scale used: _____

Test Period:

Start date & time: _____ Ambient Temp. _____ Gage used: _____

Stop date & time: _____ Ambient Temp. _____ Gage used: _____

Damage description:

Photograph damage (if present)

_____

_____

Post test initial assessment:

_____

_____

_____

Recorded by:	Date:
Witnessed by:	Date:
Quality Assurance Review by:	Date:

Notes:

Penetration Test
49 CFR 173.465 (e)

Test Specimen:

Drawing No. _____ Rev. _____ Serial Number: _____

Test Setup:

Photograph Setup

Use Figure 3 to position specimen, locate impact point and set drop height (40 inches).

Setup verified by: _____ Date: _____

Penetration Bar:

Drawing No. _____ Rev. _____ Weight: _____

Test Period:

Date & time: _____ Ambient Temp. _____ Gage used: _____

Specimen Damage:

Photograph Damage (if present)

_____

_____

_____

Post test initial assessment:

_____

_____

_____

_____

Recorded by:	Date:
Witnessed by:	Date:
Quality Assurance Review by:	Date:

Notes:

Free Drop Test
49 CFR 173.465 (c)

Test Specimen:

Drawing No. _____ Rev. _____ Serial Number: _____

Pretest weight _____ Scale Used _____

Test Setup:

Photograph Setup

Use Figure 4 to position specimen, locate impact point and set drop height (4 feet).

Setup verified by: _____ Date: _____

Drop surface:

Drawing No. _____ Rev. _____ Location: _____

Test Period:

Date & time: _____ Ambient Temp. _____ Gage used: _____

Specimen Damage:

Photograph Damage (if present)

Post test weight _____ Scale Used _____

_____

_____

Post test initial assessment:

_____

_____

_____

_____

Recorded by:	Date:
Witnessed by:	Date:
Quality Assurance Review by:	Date:

Notes:

Final Test Assessment

49 CFR 173.412 (j)

Test Specimen:

Model 880 Serial Number(s): _____

Loss or Dispersal of Radioactive Contents:

Did the source capsule remain within the source tube, attached to the source wire and undamaged? _____

Verified by: _____ Date: _____

Increase in radiation levels:

Are the final radiation profile results less than 200 mR/hr at the package's surface? _____

Is there a significant increase between pre-test profile measurements and post-test profile measurements? _____

Verified by: _____ Date: _____

Comments:

_____

_____

_____

_____

_____

_____

_____

_____

_____

_____

Engineering Review by:	Date:
Regulatory Review by:	Date:
Quality Assurance Review by:	Date:

TABLE OF CONTENTS

1.0 INTRODUCTION 2

2.0 TEST SPECIMEN 2

3.0 CHANGES TO TEST CONDITIONS OR ORIENTATIONS 2

4.0 COMPRESSION TEST DATA 2

5.0 PENETRATION TEST DATA 2

6.0 FOUR FOOT FREE DROP TEST DATA 3

7.0 RADIATION MEASUREMENT DATA (SERIAL NUMBER P01 ONLY) 3

8.0 POST TEST FINAL ASSESSMENT.. 3

APPENDIX A. TEST DATA 4

Model 880 Type A Transport Test Results

1.0 Introduction

This document describes the type A transport test results for the Model 880-transport package. The tests were conducted in accordance with AEA Technology QSA test plan #100.

One test specimen was tested and assessed to the type A test requirements. The test specimen experienced minor deformation to the shell, had radiation measurements less than 200 mR/hr at the surface with type A quantity material, and showed no significant increase in radiation measurement compared with the pre-test radiation measurements.

The final assessment concludes the model 880 transport package meets the requirements for Type A per DOT 49CFR173, NRC 10CFR71, and IAEA Safety Series 6 (As amended 1990).

2.0 Test Specimen

Two test specimen were manufactured at the AEA Technology QSA facility to the test specimen drawing TP100, revision A. One specimen was tested through all tests with the other as a spare.

Both specimens are identical except for the front plate assembly differences. These differences are documented on the route card or attached list.

3.0 Changes to Test Conditions or Orientations

There were no changes to the planned test conditions or orientations.

4.0 Compression Test Data

Both test specimen, serial number P01 & P02, tested.

Damage description.

- There was no apparent damage to either test specimen.

Post Test Initial Assessment.

- The damage caused by the test indicates the test specimens meet the requirements of the test.

5.0 Penetration Test Data

Test performed on test specimen serial number P01 only.

Damage description.

- A spherical bent approximately 1/8 inch deep at the point of impact. Point of impact as per the setup, 4 inches from front end and on top.

Post Test Initial Assessment.

- The damage caused by the test indicates the test specimens meet the requirements of the test.

6.0 Four Foot Free Drop Test Data

Test performed on test specimen serial number P01 only.

Damage Description.

- The rear end of the shell lip bent up towards the lock assembly. Bend of the shell lip approximately ½ inch out of original location.
- The front end of shell has a slight, ¼ inch dent.

Post Test Initial Assessment.

- The damage caused by the test indicates the test specimens meet the requirements of the test.

Function Check.

- The dummy source easily cycles in and out of the package without hindrance.

7.0 Radiation Measurement Data (Serial number P01 only)

Radiation measurements taken on the test specimen consisted of slowly scanning over the surface and at a meter of the package. The highest measured readings are recorded for each quadrant and each end.

A 147-curie source was used for the pre-test radiation measurements. This produced surface readings on the shell below 200 mR/hr and port readings on the ends under 300 mR/hr. One-meter readings around the shell were below 1 mR/hr and at or under 2 mR/hr at the ends.

A 128-curie source was used for the post-test radiation measurements. This produced the same results as the pre-test measurements with very little difference between each measured point.

Factored for a 27-curie source, the maximum intensity is calculated to be under 50 mR/hr at the surface and under 0.4 mR/hr at a meter.

8.0 Post Test Final Assessment.

The test specimen was tested in accordance with test plan #100 and therefore tested to the normal transport test requirements of DOT 49CFR173, NRC 10CFR71, and IAEA Safety Series 6 (As amended 1990). The model 880-transport package sustained very little damage and remained intact.

The dummy source remained secured in its fully shielded position within the source tube, attached to the source wire and undamaged.

The radiation profile results for a 27.0 curie, IR192 source is less than 200 mR/hr at the package's surface and there is no significant increase between initial profile measurements and post-test profile measurements.

Based on the above results, the model-880 prototype build passes the normal transport test requirements of 49CFR173, 10CFR71, and IAEA Safety Series 6 (As amended 1990).

TP#100
RESULTS
SG 25 FEB 00

RADIATION MEASUREMENT SUMMARY

10-Feb-00 150 Curie Max Activity Capacity
147.3 Curie Activity Used

S/N P01	Direct At Surface	Surface Factor	Direct At Meter	Capacity Factor	Corrected At Surface	Corrected At Meter
Top	95	1.27	0.5	1.02	123	0.5
Right	110	1.27	0.5	1.02	142	0.5
Front	250	1.10	2.0	1.02	280	2.0
Left	150	1.27	0.6	1.02	194	0.6
Rear	230	1.10	1.3	1.02	258	1.3
Bottom	145	1.27	0.8	1.02	188	0.8

25-Feb-00 150 Curie Max Activity Capacity
128 Curie Activity Used

S/N P01	Direct At Surface	Surface Factor	Direct At Meter	Capacity Factor	Corrected At Surface	Corrected At Meter
Top	130	1.27	0.6	1.17	193	0.7
Right	110	1.27	0.6	1.17	164	0.7
Front	210	1.10	1.6	1.17	271	1.9
Left	110	1.27	0.5	1.17	164	0.6
Rear	170	1.10	1.4	1.17	219	1.6
Bottom	120	1.27	0.7	1.17	179	0.8

25-Feb-00 27 Curie Max Activity Capacity
128 Curie Activity Used

S/N P01	Direct At Surface	Surface Factor	Direct At Meter	Capacity Factor	Corrected At Surface	Corrected At Meter
Top	130	1.27	0.6	0.21	35	0.1
Right	110	1.27	0.6	0.21	29	0.1
Front	210	1.10	1.6	0.21	49	0.3
Left	110	1.27	0.5	0.21	29	0.1
Rear	170	1.10	1.4	0.21	39	0.3
Bottom	120	1.27	0.7	0.21	32	0.1

SENTINEL

"880 Prototype"

SHIELDING PROFILE AND INSPECTION FORM

WI-Q09 Work Sheet

COPY

Model: 880 Serial Number: P01 Radionuclide: IR192 Max.Capacity: 150 Ci

Shield Data		
Shield Heat#: 38909-1	Mass of Shield: 33.50 Lbs.	Lot #: 000024-1

Initial Profile

Source Model: _____ Source SN: _____ Activity: _____ Ci

Survey Inst.: _____ SN: _____ Date Cal.: _____ Date Due: _____

Surface	Observed Intensity mR/hr	Surface Correction Factor		Adjusted Intensity mR/hr
Top			N/A	
Right			Capacity Correction Factor: _____	
Front				
Left				
Rear				
Bottom				

Inspector: _____ Date: _____ NCR #: _____

Final Profile

Source Model: 424-9 Source SN: D2879 Activity: 147.3 Ci Mass of Device: _____ Lbs.

Survey Inst.: AN/PDR27T SN: SM392401 Date Cal.: 10 May 99 Date Due: 10 May 00

Surface	Observed Intensity mR/hr: At Surface	Surface Corr. Factor	At One Meter (6")			Adjusted Intensity mR/hr: At Surface	At One Meter (6")	
Top	95	1.27	12	.5	Capacity Correction Factor: 1.01	122	12.1	.5
Right	110	1.27	15	.5		141	15.1	.5
Front	250	1.10	40	2.0		278	40.4	2.0
Left	150	1.27	17	.6		192	17.1	.6
Rear	230	1.10	45	1.3		256	45.4	1.3
Bottom	145	1.27	20	.8		186	20.2	.8

Inspector: MCBryd Date: 10 Feb 00 NCR #: N/A

QI6-1/1

Comments: MCBryd

Source Start/Locked Position: .392

Amersham QSA

SENTINEL

SHIELDING PROFILE AND INSPECTION FORM

Model: 880 Serial Number: P01 Radionuclide: IR 192 Max.Capacity: 150 Ci

Shield Data		
Shield Heat#:	Mass of Shield: Lbs.	Lot #:

Initial Profile

Source Model: Source SN: Activity: Ci

Survey Inst.: SN: Date Cal.: Date Due:

Surface	Observed Intensity mR/hr	Surface Correction Factor		Adjusted Intensity mR/hr
Top			N/A	
Right			Capacity Correction Factor:	
Front				
Left				
Rear				
Bottom				

Inspector: Date: NCR #:

Final Profile

Source Model: 424-9 Source SN: D2879 Activity: 128.0 Ci Mass of Device: Lbs.

Survey Inst.: AN/PDR27T SN: SM392401 Date Cal.: 10 MAY 99 Date Due: 10 MAY 00

Surface	Observed Intensity mR/hr: At Surface	Surface Corr. Factor	At One Meter		Adjusted Intensity mR/hr: At Surface	At One Meter
Top	130	1.27	.6		193	.7
Right	110	1.27	.6		163	.7
Front	210	1.10	1.6	Capacity Correction Factor: 1.17	270	1.9
Left	110	1.27	.5		163	.6
Rear	170	1.10	1.4		219	1.6
Bottom	120	1.27	.7		178	.8

Inspector: Dave Crum Date: 25 feb 00 NCR #:

QI6-1/1

Comments:

Amersham QSA

Appendix A. Test Data.

Compression Test
49 CFR 173.465(d)

Test Specimen:

Drawing No. TP100 Rev. A Serial Number: P01

Weight: 42.95 lbs. Scale used: OHAUS # 35014

Test Setup:

Photograph setup

Use Figure 2 to position the specimen and apply the compressive load.

Setup verified by: Dave Innis Date: 23 feb 00

Compressive Load:

Weight: 459 lbs Scale used: Port Beam Scale # L482397

Test Period:

Start date & time: 23 feb 00 12:05 PM Ambient Temp. 73.4 °F Gage used: OMEGA HH21 #ENG-12

Stop date & time: 24 feb 00 12:30 PM Ambient Temp. 73.1 °F Gage used: OMEGA HH21 #ENG-12

Damage description:

Photograph damage (if present)

NO DAMAGE

Post test initial assessment:

NO DAMAGE THEREFORE INITIAL INDICATIONS ARE THE TEST SPECIMEN MEETS THE REQUIREMENTS OF THIS TEST.

Recorded by: Dave Innis	Date: 24 feb 00
Witnessed by:	Date: 24 Feb 00
Quality Assurance Review by: Daniel W. Kurtz	Date: 24 Feb 00

Notes:

Compression Test
49 CFR 173.465(d)

Test Specimen:

Drawing No. TP100 Rev. A Serial Number: P02

Weight: 43.00 lbs Scale used: OHAUS # 35014

Test Setup:

Photograph setup

Use Figure 2 to position the specimen and apply the compressive load.

Setup verified by: Dave Quintz Date: 23 feb 00

Compressive Load:

Weight: 459 lbs. Scale used: Port Beam Scale #L482397

Test Period:

Start date & time: 23 feb 00 12:05 PM Ambient Temp. 73.4 °F Gage used: OMEGA HH21 #ENG-12

Stop date & time: 24 feb 00 12:30 PM Ambient Temp. 73.1 °F Gage used: OMEGA HH21 #ENG-12

Damage description:

Photograph damage (if present)

NO DAMAGE

Post test initial assessment:

NO DAMAGE THEREFORE INITIAL INDICATIONS ARE THE TEST SPECIMEN MEETS THE REQUIREMENTS OF THIS TEST.

Recorded by: Dave Quintz	Date: 24 feb 00
Witnessed by: [illegible]	Date: 24 FEB 00
Quality Assurance Review by: Daniel W. Kurtz	Date: 24 Feb 00

Notes:

Penetration Test
49 CFR 173.465 (e)

Test Specimen:

Drawing No. TP100 Rev. A Serial Number: P01

Test Setup:

Photograph Setup

Use Figure 3 to position specimen, locate impact point and set drop height (40 inches).

Setup verified by: Dave Cunt Date: 24 feb 00

Penetration Bar:

Drawing No. BT10129 Rev. B Weight: 13.4 lbs SN 1

Test Period:

Date & time: 24 feb 00 2:53 PM Ambient Temp. 58° F Gage used: ENG-12 OMEGA HH-21

Specimen Damage:

Photograph Damage (if present)

DENT .134 DEEP

Post test initial assessment:

MINOR DAMAGE INDICATES THE TEST SPECIMEN MEETS THE REQUIREMENTS OF THIS TEST.

Recorded by: Dave Cunt	Date: 24 feb 00
Witnessed by: Steve Glenn / [illegible]	Date: 24 FEB 00 / 24 FEB 00
Quality Assurance Review by: Daniel W. Kurtz	Date: 24 FEB 00

Notes:

Free Drop Test
49 CFR 173.465 (c)

Test Specimen:

Drawing No. TP100 Rev. A Serial Number: P01

Pretest weight 42.95 lbs Scale Used 35014

Test Setup:

Photograph Setup

Use Figure 4 to position specimen, locate impact point and set drop height (4 feet).

Setup verified by: Dave Arnt Date: 24 feb 00

Drop surface:

Drawing No. A T10122 Rev. B Location: VALLY TREE GROVELAND, MA.

Test Period:

Date & time: 24 Feb 00 3:00 PM Ambient Temp. 59° F Gage used: OMEGA HH21 #ENG-12

Specimen Damage:

Photograph Damage (if present)

Post test weight 42.90 lbs Scale Used 35014

Post test initial assessment:

DAMAGE:

REAR OF DEVICE SHELL MATERIAL ROLLED APPROX 1/2" (DENTED)

FRONT OF DEVICE SHELL MATERIAL SLIGHTLY BENT APPROX 1/4"

Recorded by: Dave Arnt	Date: 24 feb 00
Witnessed by: Steve [illegible]	Date: 24 Feb 00 / 24 Feb 00
Quality Assurance Review by: Danny W. Kent	Date: 24 Feb 00

Notes:

* MINOR DAMAGE INDICATES THE TEST SPECIMEN MEETS THE REQUIREMENTS OF THIS TEST.

FUNCTIONAL TEST: DUMMY SOURCE PROJECTS AND SECURES WITHOUT HINDERANCE.

(DA) 24 feb 00

(SD) 24 Feb 00

[illegible] 24 Feb 00

Final Test Assessment

49 CFR 173.412 (j)

Test Specimen:

Model 880 Serial Number(s): P01

Loss or Dispersal of Radioactive Contents:

Did the source capsule remain within the source tube, attached to the source wire and undamaged? Yes

Verified by: Dave Quint Date: 25 feb 00

Increase in radiation levels: * FOR 27 CURIES OF IR192

Are the final radiation profile results less than 200 mR/hr at the package's surface? Yes *

Is there a significant increase between pre-test profile measurements and post-test profile measurements? NO

Verified by: Dave Quint Date: ~~24~~ DW 25 feb 00 25 feb 00

Comments:

Engineering Review by: S. Gr	Date: 25 Feb 00
Regulatory Review by:	Date: 25 Feb 00
Quality Assurance Review by: D.W. Kurtz	Date: 25 Feb 00

W/O M107730 + Q89650

No	Description of nonconformance	Disposition	Prod.	Eng.	Insp.
	DWG A88012 REV 1 TRIGGER ASSEMBLY ① PARTS NOT AVAILABLE FOR ASSEMBLY S/N P01 + P02	USE WITHOUT	RWE 23 Feb 00	SD 23 Feb 00	DW 23 feb 00
	DWG. B88013 REV 1 LOCK MOUNT ASSEMBLY ① TRIGGER ASSEMBLY NOT INCLUDED. ② TRIGGER ASSY SCREW NOT INCLUDED. S/N P01 + P02	USE WITHOUT TRIGGER ASSY	RWE 23 Feb 00	SD 23 Feb 00	DW 23 feb 00
	DWG B88011 REV. 2 BODY WELDMENT ① TUBE SLEEVE (A88006) GLUED TO FRONT + REAR ENDPLATES. ② SHIELD SPACER (A88005) TAPED TO SHIELD. ③ BOTH ENDS OF STUBE RADIUS + DEBURRED ON INSIDE TO REMOVE SHARP EDGES. ④ STAMPED SERIAL NUMBER TO ENDPLATE S/N P01 + P02	UPDATE DWGS	RWE 23 Feb 00	SD 23 Feb 00	DW 23 feb 00
	DWG B88020 REV. 1 REAR PLATE ASSEMBLY ① STAMPED SERIAL NO. ON BACK. ② TORQUED ITEM 12 TO 30 IN-LB ± 5 IN-LB. ③ ADDED LIBRATITE TO ITEMS 12 + 13. ④ LUBRICATED ITEMS 5 + 8 ⑤ SLIDE CHANGED TO REV. 3, DWG A88024. S/N P01 + P02	UPDATE DWGS. — TORQUE WRENCH:	RWE 23 Feb 00	SD 23 Feb 00	DW 23 feb 00
	DWG B88030 REV 1. FRONT PLATE ASSEMBLY ① REPLACED PIN TO DWG A88037 REV 3. ② MODIFIED ROTOR TO DWG B88032 REV 5. ③ MODIFIED KNOB TO DWG A88033 REV. 2. ④ ADDED GRIP KNOB PER DWG A88038 REV 1 ⑤ ADDED PIVOT DISK PER DWG A88039 REV 1 ⑥ ADDED FLAT HD SCREWS	UPDATE DWGS. S/N P01 ONLY.	RWE 23 Feb 00	SD 23 Feb 00	DW 23 feb 00

w/o M107730 + Q89650

No	Description of nonconformance	Disposition	Prod.	Eng.	Insp.
	DWG. TP100 + TP104 TEST SPECIMEN DWG. (1) ADDED ANTI-SIEZE TO 5/16 BOLTS. (2) ADDED RELIEF TO LOCK PLATES TO CLEAR WELD (1/16 High AT Bottom lip between BOLT Holes) S/N P01 + P02	UPDATE DWG	RJOE 23 Feb 00	SL 23 Feb 00	DW 23 feb 00

SENTINEL

ROUTE CARD

QC Lot#: NA | Complete Lot: | Total WO Qty.: 2 | Serial No: P01

CM: A | Split Lot: ✓ | Rte. Cd. Qty.: 1 | Lot No: NA

Part # TP100	Description MODEL 880 TEST UNIT TYPE A	Dwg TP100	Rev A	WO Q89650

Oper. Seq.	Department	Operation Description	By	Date	Qty Acc	Qty Rej	Reference	Comments
0010	ASSY / MS	ASSEMBLE PER NOTES 1-4	RWE	23 Feb 00			TP100	
0020	QC	INSPECTION	DG	23 feb 00	1	0	SOP-Q015	
0030	QA	QA REVIEW	[illegible]	23 Feb 00			SOP-Q025 & TP100	
0040	IC	STOCKROOM PROCESSING	AC	23 Feb 00			SOP-M002	
		DELIVER TO QC FOR						
		TESTING						

Drawing	Checklist	Initials	WI--Step	Checklist	Initials	WI--Step	Checklist	Initials
TP100	NOTE 1. TORQUE 110 +/-5" LBS.	RWE DG						
TP100	NOTE 3 TOTAL WEIGHT	42.95 DG 23 feb 00						

ENGINEERING: S. G. 23 Feb 00 | REGULATORY: [illegible] 23 Feb 00 | MATERIALS: Alan Cani 23 Feb 00

PRODUCTION: RW Crane 23 Feb 00 | QUALITY ASSURANCE: D.W. Kurtz 23 Feb 00 | ISSUE NUMBER: 1

SENTINEL

NO	DESCRIPTION OF NONCONFORMANCE	DISPOSITION	INDIV/ DATE	INSP/DATE	PART NUMBER	DESCRIPTION	CM	SERIAL/ LOT NO.	INITIALS	DATE
					88011	BODY WELDMENT	A	P01	RWE	23 Feb 00
					88020	REAR PLATE ASSY.	A	P01	RWE	23 Feb 00

MTE SN	MTE DESCRIPTION	CAL DUE DATE	INITIALS	DATE
ASSY15	TORQUE WRENCH	4-2-00	RWC	23 Feb 00
35014	SCALE	11-24-00	DW	23 feb 00

CHANGE VERIFICATION

PART NUMBER	DESCRIPTION	REV	ECO	INDIVIDUAL	VERIFIED

simco electronics

127 RIVERNECK ROAD
CHELMSFORD, MA 01824

Da 21 OCT 99 Certificate No. **1054915**

KEMA CERTIFIED
ISO 9002 REGISTERED
CERT.NO. 10458.01

CERTIFICATE OF CALIBRATION FOR AEA TECHNOLOGIES

Description: **OMEGA ENGINEERING, HH21, MICROPROCESSOR THERMOMETER**

Serial No: **T179139** Asset No: **ENG-12** Simco ID: **24948-10**

Dept: **NONE** PO No: **P4732-00**

Calibration Date: **10/18/99**	Calibration Interval: **12 Months**	Recall Date: **10/18/00**

Arrival Condition:	Service:
MEETS MANUFACTURER'S SPEC'S.	**CLEAN/CALIBRATE TO MFR'S SPEC**

Procedure: **PER MFRS. SPEC** Cal Ratio: **2.00:1**
Temperature: **67°F** Relative Humidity: **38%**

Standards Used:

Type	Simco ID	Due Date	Intvl Mos	Accuracy	NIST No
POTENTIOMETER	**23565*210**	**01/08/00**	**6**	**+/-12uV**	**413348**
POTENTIOMETER	**23565*210**	**01/08/00**	**6**	**+/-0.6'C**	**255343**

Work performed by: DA
Duane A. Archambault
Technician (11468)

Reviewed by:
Phillip A. Maltais P. Mal
Lab Supervisor

All calibrations are performed using internationally recognized standards traceable to the National Institute of Standards and Technology (NIST) or the National Physical Laboratory (NPL), or using natural physical constants or ratio calibration techniques. Our calibration system complies with MIL-STD-45662A and ANSI/NCSL Z540-1. The information shown on this certificate applies only to the instrument identified above and may not be reproduced, except in full, without prior written consent from SIMCO Electronics.
Dated: **10/18/99**

Customer: AEA TECHNOLOGY
P.O. No.: P4634-00
Date Cal: 11/24/99
ID.No.: 268 Manufacturer: TOLEDO Date Due: 11/24/00
2 ID.No.: Serial No.: 2642125-2VT Technician: DD
Department: Model No.: 8582 Cal. Proc. No: 01
Deviation u.: Standard No.: 018 Cal.: 03/24/99 Due: 03/24/00
Accuracy: +/-4% Standard No.: Cal.: Due:
Accuracy: Standard No.: Cal.: Due:
Standard No.: Cal.: Due:
Gage Type: 0-10.0lb SCALE

Required:	0	1.0	2.0	5.0	7.0	10.0 lb
Deviation:						
Measured:	REF	1.000	2.000	5.000	7.000	10.000 lb

Customer: AEA TECHNOLOGY
P.O. No.: P4634-00
Date Cal: 11/24/99
ID.No.: 269 Manufacturer: NCI Date Due: 11/24/00
2 ID.No.: Serial No.: SR878400111 Technician: DD
Department: Model No.: 8300 Cal. Proc. No: 01
Deviation u.: Standard No.: 018 Cal.: 03/24/99 Due: 03/24/00
Accuracy: +/-4% Standard No.: Cal.: Due:
Accuracy: Standard No.: Cal.: Due:
Standard No.: Cal.: Due:
Gage Type: 0-10.0lb DIGITAL SCALE

Required:	0	1.0	2.0	5.0	7.0	10.0lb
Deviation:						
Measured:	REF	1.000	2.000	5.002	7.002	10.002lb

Customer: AEA TECHNOLOGY
P.O. No.: P4634-00
Date Cal: 11/24/99
ID.No.: 3500 Manufacturer: DILLON Date Due: 11/24/00
2 ID.No.: Serial No.: D-3500 Technician: DD
Department: Model No.: Cal. Proc. No: 22
Deviation u.: Standard No.: 018 Cal.: 03/24/99 Due: 03/24/00
Accuracy: +/-4% Standard No.: 031 Cal.: 02/23/95 Due: 02/23/00
Accuracy: Standard No.: Cal.: Due:
Standard No.: Cal.: Due:
Gage Type: 0-500lb FORCE GAGE

Required:	0	50.0	100.0	150.0	200.0 lb	
Deviation:						
Measured:	REF	51.0	103.0	153.0	202.0 lb	

Customer: AEA TECHNOLOGY
P.O. No.: P4634-00
Date Cal: 11/24/99
ID.No.: 35014 Manufacturer: O'HAUS Date Due: 11/24/00
2 ID.No.: Serial No.: 35014 Technician: DD
Department: Model No.: DS10 Cal. Proc. No: 01
Deviation u.: Standard No.: 018 Cal.: 03/24/99 Due: 03/24/00
Accuracy: +/-4% Standard No.: 031 Cal.: 02/23/95 Due: 02/23/00
Accuracy: Standard No.: Cal.: Due:
Standard No.: Cal.: Due:
Gage Type: 0-110lb DIGITAL SCALE

Required:	0	5.0	10.0	20.0	50.0	70.0	100.0lb
Deviation:							
Measured:	REF	5.00	10.00	20.00	50.00	69.95	100.00lb

CERTIFICATE OF CALIBRATION

Test and Inspection Report prepared by Mettler Toledo ~~Commercial Scale Service~~

This is to certify that the undersigned has inspected the following for

AEA Technologies

Make NES

Capacity 2000 LB.

Grad Size .5

Type Port Beam Scale

Model No. Port Beam

Serial No. L 482397

Location Assembly-11

I. D. No.

SCALE READINGS

STANDARD'S USED	BEFORE ADJUSTMENTS	AFTER ADJUSTMENTS		
0	0	N/A		
500 LB.	500.0			
1000 "	1000.0			
1500 "	1498.0			

☑ **SCALE PASSES** ☐ **DOES NOT PASS**

This is to certify that the weighing device identified above has been calibrated using certified test weight traceable to the National Institute of Standards and Technology (formerly NBS) and is guaranteed accurate to the tolerance indicated. Traceability # 12691 CT.

Inspection in accordance with National Bureau of Standard Handbook 44 and Mil Standard C-45662A.

Additional Data:

Scale Inspector Carmine J Belleville Date: 11-22-99

Company Mettler Toledo Due Date: 5-22-2000

Service Report / Order No.

```
   Customer: AEA TECHNOLOGY                                          P.O. No.: 3753
                                                                     Date Cal: 04/01/99
     ID.No.: 273 A&B            Manufacturer: THREADS, INC.          Date Due: 04/01/00
  2 ID.No.:                       Serial No.:                      Technician: PR
 Department:                       Model No.:                    Cal. Proc. No: 15
Deviation u.:                    Standard No.: 006        Cal.: 02/10/99    Due: 08/31/99
   Accuracy: GO  +0.000 20"      Standard No.: 021        Cal.: 02/10/99    Due: 08/31/99
   Accuracy: NG  -0.000 20"      Standard No.:            Cal.:             Due:
                                 Standard No.:            Cal.:             Due:
  Gage Type: GO/NO GO PLAIN PLUG SET
          :            GO                              NO GO
 Required: :         0.6250"                          0.6256"
Deviation: : +0.00001"     +0.00001"            -0.00001"     -0.00001"
 Measured: : +0.62501"     +0.62501"            -0.62559"     -0.62559"
            :-----------------------------------------------------------------

   Customer: AEA TECHNOLOGY                                          P.O. No.: 3753
                                                                     Date Cal: 04/01/99
     ID.No.: 285 A&B            Manufacturer: REGAL BELOIT           Date Due: 04/01/00
  2 ID.No.:                       Serial No.:                      Technician: PR
 Department:                       Model No.:                    Cal. Proc. No: 15
Deviation u.:                    Standard No.: 011        Cal.: 03/23/99    Due: 06/30/99
   Accuracy: GO  -0.000 30"      Standard No.:            Cal.:             Due:
   Accuracy: NG  +0.000 30"      Standard No.:            Cal.:             Due:
                                 Standard No.:            Cal.:             Due:
  Gage Type: 1.0"-8 UN-2A THREAD RING SET     (SET PLUG PASSES)
          :            GO                              NO GO
 Required: :         0.9168"                          0.9100"
Deviation: :         0.0000"                          0.0000"
 Measured: :         0.9168"                          0.9100"
            :-----------------------------------------------------------------

   Customer: AEA TECHNOLOGY                                          P.O. No.: 3753
                                                                     Date Cal: 04/01/99
     ID.No.: ASSY-1             Manufacturer: MITUTOYO               Date Due: 04/01/00
  2 ID.No.:                       Serial No.:                      Technician: PR
 Department: MACHINE SHOP          Model No.: 101-105            Cal. Proc. No: 03
Deviation u.:                    Standard No.: 026        Cal.: 02/10/99    Due: 08/31/99
   Accuracy: +/-0.000 10"        Standard No.:            Cal.:             Due:
   Accuracy:                     Standard No.:            Cal.:             Due:
                                 Standard No.:            Cal.:             Due:
  Gage Type: 0-1.0" OD MICROMETER
          :
 Required: : 0    0.100"    0.115"    0.250"    0.500"    0.750"    1.000"
Deviation: :REF      0         0         0         0         0         0
 Measured: :REF   0.1000"   0.1150"   0.2500"   0.5000"   0.7500"   1.0000"
            :-----------------------------------------------------------------

   Customer: AEA TECHNOLOGY                                          P.O. No.: 3753
                                                                     Date Cal: 04/02/99
     ID.No.: ASSY-15  (A)       Manufacturer: CRAFTSMAN              Date Due: 04/02/00
  2 ID.No.:                       Serial No.:                      Technician: PR
 Department:                       Model No.: 44593              Cal. Proc. No: 23
Deviation u.:                    Standard No.: 158        Cal.: 07/06/98    Due: 07/06/99
   Accuracy: +/-4%               Standard No.: 159        Cal.: 07/06/98    Due: 07/06/99
   Accuracy:                     Standard No.: 160        Cal.: 07/06/98    Due: 07/06/99
                                 Standard No.:            Cal.:             Due:
  Gage Type: 25.250 in/lb TORQUE WRENCH   C.W.     (PART 1 OF 2)
          :
 Required: :  25.0    50.0    75.0    100.0    150.0    200.0    250.0 lb
Deviation: : +0.32   +0.63   -0.74    +0.3     +2.4     +5.0     +4.1  lb
 Measured: : 25.32   50.63   74.26    100.3    152.4    205.0    254.1 lb
            :-----------------------------------------------------------------
```

Customer: AEA TECHNOLOGY
P.O. No.: 3753
Date Cal: 04/02/99
ID.No.: ASSY-15 (B) Manufacturer: CRAFTSMAN Date Due: 04/02/00
2 ID.No.: Serial No.: Technician: PR
Department: Model No.: 44593 Cal. Proc. No: 23
Deviation u.: Standard No.: 158 Cal.: 07/06/98 Due: 07/06/99
Accuracy: +/-4% Standard No.: 159 Cal.: 07/06/98 Due: 07/06/99
Accuracy: Standard No.: 160 Cal.: 07/06/98 Due: 07/06/99
Standard No.: Cal.: Due:
Gage Type: 25.250 in/lb TORQUE WRENCH C.C.W. (PART 2 OF 2)

Required:	25.0	50.0	75.0	100.0	150.0	200.0	250.0 lb
Deviation:	-0.51	+1.02	+1.26	+2.1	+3.6	+4.8	+6.1 lb
Measured:	24.49	51.02	76.26	102.1	153.6	204.8	256.1 lb

Customer: AEA TECHNOLOGY
P.O. No.: 3753
Date Cal: 04/01/99
ID.No.: ASSY-2 Manufacturer: MITUTOYO Date Due: 04/01/00
2 ID.No.: Serial No.: Technician: PR
Department: MACHINE SHOP Model No.: 505-644-50 Cal. Proc. No: 16
Deviation u.: Standard No.: 026 Cal.: 02/10/99 Due: 08/31/99
Accuracy: +/-0.0010" Standard No.: 088 Cal.: 02/10/99 Due: 08/31/99
Accuracy: Standard No.: 137 Cal.: 02/10/99 Due: 02/28/00
Standard No.: Cal.: Due:
Gage Type: 0-8.0" DIAL CALIPER

	0	PARA	ID	OD	1.0"	2.0"	4.0"	6.0"	8.0"
Deviation:	REF	.0005	+.0005		+.0005	+.0005	+.0005	-.0010	-.0010
Measured:	REF	.0005	1.0005"		1.0005"	2.0005"	4.0005"	5.9990"	7.9990"

Customer: AEA TECHNOLOGY
P.O. No.: 3753
Date Cal: 04/01/99
ID.No.: ASSY-4 (A) Manufacturer: MITUTOYO Date Due: 04/01/00
2 ID.No.: Serial No.: Technician: PR
Department: MACHINE SHOP Model No.: 505-628-50 Cal. Proc. No: 16
Deviation u.: Standard No.: 027 Cal.: 02/10/99 Due: 08/31/99
Accuracy: +/-0.0010" Standard No.: 088 Cal.: 02/10/99 Due: 08/31/99
Accuracy: Standard No.: 134 Cal.: 02/10/99 Due: 02/28/00
Standard No.: Cal.: Due:
Gage Type: 0-12.0" DIAL CALIPER (PART 1 OF 2)

	0	PARA	ID	OD	1.0"	2.0"	4.0"
Deviation:	REF	.0010	-.0010		-.0010	-.0010	-.0010
Measured:	REF	.0010	0.9990		0.9990"	1.9990"	3.9990"

Customer: AEA TECHNOLOGY
P.O. No.: 3753
Date Cal: 04/01/99
ID.No.: ASSY-4 (B) Manufacturer: MITUTOYO Date Due: 04/01/00
2 ID.No.: Serial No.: Technician: PR
Department: MACHINE SHOP Model No.: 505-628-50 Cal. Proc. No: 16
Deviation u.: Standard No.: 027 Cal.: 02/10/99 Due: 08/31/99
Accuracy: +/-0.0010" Standard No.: 088 Cal.: 02/10/99 Due: 08/31/99
Accuracy: Standard No.: 134 Cal.: 02/10/99 Due: 02/28/00
Standard No.: Cal.: Due:
Gage Type: 0-12.0" DIAL CALIPER (PART 2 OF 2)

Required:	6.0"	8.0"	10.0"	12.0"
Deviation:	-.0010	-.0010	-.0010	-.0010
Measured:	5.9990"	7.9990"	9.9990"	11.9990"

SENTINEL

ROUTE CARD

QC Lot# 11930 | Complete Lot: | Total WO Qty.: 10 | Serial No: P01

CM: A | Split Lot : | Rte. Cd. Qty.: 1 | Lot No: NA

FOR PROTOTYPE FABRICATION ONLY

Part # ~~88000~~ TP100 + TP104 | Description (TEST SPECIMEN) MODEL 880 ASSEMBLY | Dwg ~~B88000~~ TP100 + TP104 | Rev A | WO M107730

Oper. Seq.	Department	Operation Description	By	Date	Qty Acc	Qty Rej	Reference	Comments
0010	MS	WELD	DRD	3 Feb 00			A88010	REV.2
0020	QC	INSPECT	MDB	3 Feb 00	2	2	A88010	REV.2 LOT# QCL#11852
0030	MS/ ASSY.	ASSEMBLE	—	NA	—		A88012	REV.1 (SEE ATTACHED)
			RWE	23 Feb 00			B88013	REV.1
			RWE	23 Feb 00			B88020	REV.1
			RWE	23 Feb 00			B88030	REV.1
0040	QC	INSPECT	—	NA	—	—	A88012	REV.1
			DW	23 Feb 00	1	0	B88013	REV.1
			DW	23 Feb 00	1	0	B88020	REV.1 LOT# SN 135 T 660 .198 00054-1
			DW	23 Feb 00	1	0	B88030	REV.1
0050	MS	ASSEMBLE	DFW	4 FEB 00			B88011	REV. 2 WI-AS48
0060	QC	ENDPLATES PROPERLY ATTACHED TO SHIELD		4 Feb 00	1	0	B88011	REV.2 LOT# P01
0070	MS/ASSY	TACK WELD & ASSEMBLE	DRD	4 Feb 00			B88011	REV.2 WI-AS48
0080	QC	* INSPECT & INITIAL PROFILE	MDB	10 Feb. 00	0		B88011	REV.2 11 Feb 14 Feb 00 * Track Welds
0090	MS	WELD ,FOAM & ASSEMBLE	DRD RWE	14 Feb 00 17 Feb 00	1		B88000 TP100	REV.1 B88011 REV.2 WI-AS48, AS40
0100	QC	Weld Only FINAL INSPECTION	MDB	17 Feb 00	1	0	UAE 17 Feb 00 B88000 TP100	Under/Oversize QCL11956 REV.A
0110	QC	FINAL PROFILE					TP100 ~~B88000~~	REV A
0120	QA	QA REVIEW					SOP-Q025	
0130	IC	STOCKROOM PROCESSING					SOP-M02	

Process Shifted to TP100 + TP104 Route Card 23 Feb 00

WI-STEP	Checklist	Initials	WI--Step	Checklist	Initials	Drawing #	Checklist	Initials
9.3	PERFORM & VERIFY FINAL CUT OF SHIELD	RWE	9.20	VERIFY S.N. OF SHELL vs. NAMEPLATE AND LABELS	RWE	B88000	TOTAL PACKAGE WEIGHT	DW 42.95 lb
			9.21	TORQUE	RWE			
9.5	VERIFY S.N. OF DEVICE STAMPED ON SHELL	RWE	9.23	FUNCTONAL TEST W/ DUMMY SOURCE	RWE			

ENGINEERING: S. Gerini 3 Feb 00	REGULATORY: C. Rouphan 3 Feb 00	MATERIALS: Alan Cain 3 Feb 00	
PRODUCTION: RW Cowan 3 Feb 00	QUALITY ASSURANCE: [illegible] 3 Feb 00	ISSUE NUMBER: 1	

38.50 (B88011)

SENTINEL

NO	DESCRIPTION OF NONCONFORMANCE	DISPOSITION	INDIV/ DATE	INSP/DATE	PART NUMBER	DESCRIPTION	CM	SERIAL/ LOT NO.	INITIALS	DATE
1	OP. SEQ 0020 88010 ~~NCR-4989 W-2~~	* NCR 4989 VOIDED MRB 3 Feb 00 * ~~SEE NCR~~			88001	D.U. SHIELD	Heat Lot A	38909-1 00024-1	RWE	4 Feb-00
	NCR # QCL 11852	SUBMIT DCR TO CHG DWG. (2/16 min) SD 3 Feb 00			88004	ENDPLATE	A	LOT 00034-2	DRB	13 FEB 00
			CMR 3 Feb 00		88010	ENDPLATE WELD'T.	A	LOT 00034-5	MRB	3 Feb 00
		RWE 3 Feb 00			88011	BODY WELDMENT	A	00054-2	DW	23 feb 00
		F 3 Feb 00			88020	REAR PLATE ASSY.	A	00054-1	DW	23 feb 00
2	P/N 88037 REV 2	RWK in MS	to Tim	F 4 Feb 00	88021	LOCK MTG. PLATE	A	00034-1	DW	23 feb 00
	Rework from 1	DFW 4 FEB 00			CBL004	7 X 19 CABLE	A	000	RWE	8 Feb-00
		SD 4 FEB 00 F 4 Feb 00			SCR003	10-32 X 1 1/4 SCREW	A	99139-1	RWE	8 Feb-00
	washer	CMR 4 Feb 00			*	WELD ROD	A	LOT 94048-4	DRB	16 FEB 00
3	add 1 flat washer on each	F 4 Feb 00			*	ac 16 Feb 00	DW 16 Feb 00			
	End Plate between	SD 4 Feb 00			MTE SN	MTE DESCRIPTION	CAL DUE DATE		INITIALS	DATE
	Cotter Pin & Bracket	CMR 4 Feb 00			ASSY-2	CALIPERS	4-1-00		RWE	4 Feb-00
	(at installation of Pin ASM)	RWE 4 Feb 00			ASSY-15	TORQUE WRENCH	4-2-00		RWE	23 Feb 00
	P/N 65006-6) 2 per	step 0020			269	FOAM SCALE	11-24-00		RWE	17 Feb-00
					35014	SCALE	11-24-00		DW	23 feb 00
5	operation .0030 to	Proceed to 0050								
	0050 not performed due	SD 7 Feb 00 F 7 Feb 00								
	to part availability	RWE 7 Feb 00								
		CMR 7 Feb 00								
	IT IS ACCEPTABLE TO GO	OUT OF SEQUENCE								
	ON THIS ROUTE CARD FOR	PROFILE PURPOSES.								
	A FUNCTIONAL TEST WAS	BEEN PERFORMED.			CHANGE VERIFICATION					
	DWK 10 FEB 00	CMR 10 Feb 00			PART NUMBER	DESCRIPTION	REV	ECO	INDIVIDUAL	VERIFIED
		RWM 10 Feb 00								
		SD 10 Feb 00								
6	Fail Initial Profile Seq Attached SPI F/G-11/QCL 11930 NCR	PROCEED to WELD + FINISH ASSY 88011								
7	K Part + K OVER SIZE	HAF	DW 17 Feb 00	SD 14 Feb 00						

SENTINEL

TP 100

INSPECTION INSTRUCTION AND RECORD	ORIGINATOR / DATE: Dave Lanning 23 Feb 00	REV: A	PART NO.: TP100	SUPPLIER: ASSEMBLY
	QA APPROVAL / DATE: 23 Feb 00	CM: A	PIL: NA	DESCRIPTION: MODEL 880 TYPE A TEST SPECIMEN

CHARACTERISTICS	TOLERANCE	MTE / SN.	AQL	1	2	3	4	5	6	7	8	9	10
GENERAL VISUAL	NA	NA	C/100%	0/2									
VERIFY ALL ITEMS PRESENT PER DWG.	NA	NA		0/2									
NOTE 1 TORQUE 110 IN LB ± 5	± 5 IN LB	SEE ROUTE CARD		0/2									
NOTE 2 INSTALL DUMMY SOURCE ASSY	NA	NA		0/2									
NOTE 3 RECORD TOTAL WEIGHT	NA	SEE ROUTE CARD		0/2									
NOTE 4 MARK SN ON ENDPLATE & LABEL	NA	NA		0/2									

COMMENTS:		1	2	3	4	5	6	7	8	9	10
	PO/WO #										
	TRAVELER / QCL #	N/A									
	LOT / SERIAL #	P01/P02									
	LOT QTY.	2									
	QTY. REJ / NCR #	0/NA									
	QTY. ACC.	2									
	INSP / DATE	DW 23 FEB 00									

REVISIONS				
REV.	ECO/TGR #	DESCRIPTION	APPROVALS	DATE
A	2655	INITIAL RELEASE	SEE TITLE	BLOCK

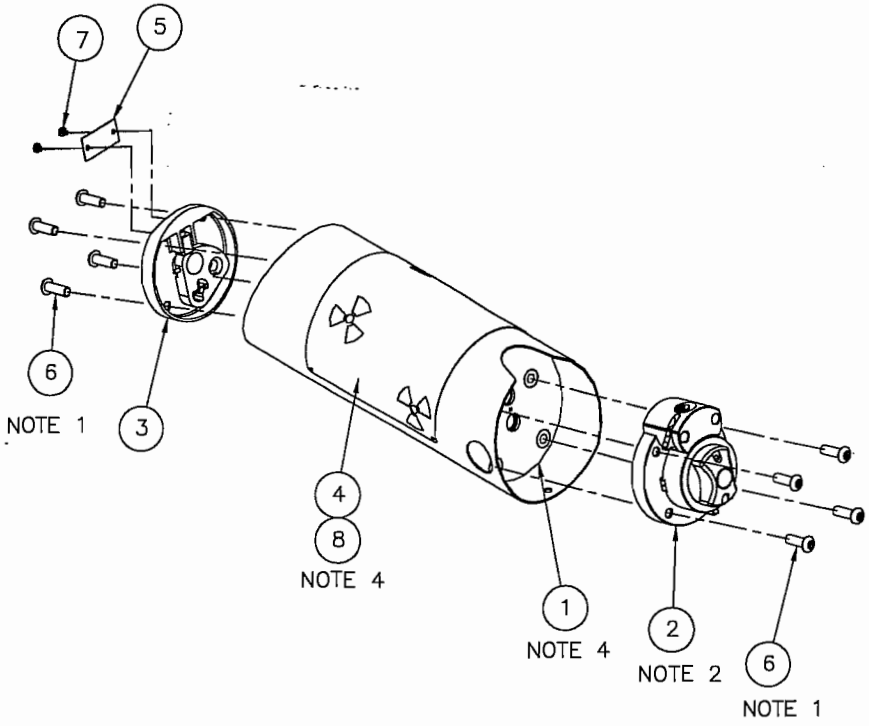

PRODUCTION PRINT
THIS DRAWING FOR USE WITH
ORDER NUMBER Q29650 ONLY.
FEB 2000
RETURN TO ENGINEERING WITH DCR
IF NOTES ARE ADDED DURING MANUFACTURING.
THIS DRAWING IS NOT TO BE USED FOR PRODUCTION
FOLLOWING THE COMPLETION OF THE WORK ORDER.

ITEM	DRAWING NO.	QTY.	DESCRIPTION
9	42409XL	1	DUMMY SOURCE ASSEMBLY
8	RIV003	4	POP RIVET
7	SCR137	2	BINDER HEAD SCREW, #6–32 X 3/16 LG.
6	SCR154	8	SECURITY SCREW, 5/16–18 X 1–1/2 LG.
5	A88043	1	SOURCE ID TAG
4	B88042	1	LABEL
3	B88030	1	FRONT PLATE ASSEMBLY
2	B88020	1	REAR PLATE ASSEMBLY
1	B88011	1	BODY WELDMENT

NOTES:

1. TORQUE ITEM 6 TO 110 ± 5 IN LB.
2. INSTALL AND SECURE DUMMY SOURCE ASSEMBLY.
3. RECORD TOTAL WEIGHT.
4. MARK SERIAL NUMBER ON ENDPLATE AND LABEL.

THIS DRAWING IS THE EXCLUSIVE PROPERTY OF AEA TECHNOLOGY QSA. IT MAY ONLY BE USED FOR THE PURPOSE FOR WHICH IT WAS ISSUED. IT MAY NOT BE DUPLICATED IN ANY WAY, NOR TRANSMITTED TO ANY THIRD PARTY WITHOUT THE EXPRESS PERMISSION OF AEA TECHNOLOGY QSA.

MATERIALS: SEE PARTS LIST

PROTECTIVE FINISH: NONE

UNLESS OTHERWISE SPECIFIED;
1. DIMENSIONS ARE IN INCHES.
2. MIN SURFACE TEXTURE: 125
3. TOLERANCES APPLY AFTER PLATING.
4. REMOVE BURRS AND SHARP EDGES.
5. DO NOT SCALE DRAWING.
6. TOLERANCES: .X ± 0.1, FRACTIONS ± 1/64, .XX ± 0.01, MACHINED ANGLES ± 1°, .XXX ± 0.005

USED ON:

DRAWN	S. G.	22 Feb
CHECKED		22 Feb 00
APPR.		22 Feb 00

THIRD ANGLE PROJECTION

SAFETY CLASS A

AEATECHNOLOGY QSA
40 NORTH AVE, BURLINGTON, MA 01803

TITLE: MODEL 880 TYPE A TEST SPECIMEN

SIZE	DWG. NO.	REV
B	TP100	A

SCALE: 1/2 SHEET 1 OF 1

24 FEB 00

TEST PLAN #100 AND #104 DEVIATIONS

(1) ADDED A .094 DIAMETER HOLE IN SHELL AT THE TOP FRONT END OF BOTH TEST SPECIMEN (P01 + P02).
THIS will PROVIDE Single POINT HANG FOR THE DROP TESTS.

SD 24 FEB 00
DW 24 feb 00
✓ 25 FEB 00
DWK 25 Feb 00

2.12.2 Test Plan 108 Issue 5 (Jul 2000)

Issue 5

TEST PLAN 108

MODEL 880

RADIOGRAPHY PROJECTOR TYPE (B) TRANSPORT PACKAGE TESTS

As of

July 13, 2000

Contents

SECTION 1 INTRODUCTION 4

SECTION 2 TRANSPORT PACKAGE DESCRIPTION 5

SECTION 3 REGULATORY COMPLIANCE 8

SECTION 4 DISCUSSION ON SYSTEM FAILURE MODES OF INTEREST 9
4.1 General 9
4.2 Normal and Accident Conditions of Transport 9

SECTION 5 ASSESSMENT OF PACKAGE CONFORMANCE 10
5.1 Regulatory Requirements 10
5.1.1 Normal Conditions of Transport (71.43(f)) 10
5.1.2 Hypothetical Accident Conditions (71.51(a)) 10
5.2 Test Package Contents 10

SECTION 6 CONSTRUCTION AND CONDITION OF TEST SPECIMENS 11

SECTION 7 MATERIAL AND EQUIPMENT LIST 12

SECTION 8 TEST PROCEDURE 13
8.1 General 13
8.2 Roles and Responsibilities 14
8.3 Test Specimen Preparation and Inspection 15
8.4 Summary of Test Schedule 16

8.5 1.2M (4-FOOT) FREE DROP TEST (10 CFR 71.71(C)(7)) 19
8.5.1 1.2m Free Drop Test Set-up 19
8.5.2 Specimen TP108(A) Orientation for the 1.2m Drop Test 20
8.5.3 Specimen TP108(B) Orientation for the 1.2m Drop Test 21
8.5.4 Specimen TP108(C) Orientation for the 1.2m Drop Test 22
8.5.5 1.2m Free Drop Test Assessment 23

8.6 9M FREE DROP TEST (10 CFR 71.73(C)(1)) 24
8.6.1 9m Free Drop Test Set-up 24
8.6.2 Specimen TP108(A) Orientation for the 9m Drop Test 25
8.6.3 Specimen TP108(B) Orientation for the 9m Drop Test 26
8.6.4 Specimen TP108(C) Orientation for the 9m Drop Test 27
8.6.5 9m Free Drop Test Assessment 28

8.7 PUNCTURE TEST (10 CFR 71.73(C)(3)) 29
8.7.1 Puncture Test Set-up 29
8.7.2 Specimen TP108(A) Orientation for the Puncture Test 30
8.7.3 Specimen TP108(B) Orientation for the Puncture Test 31
8.7.4 Specimen TP108(C) Orientation for the Puncture Test 32
8.7.5 Puncture Test Assessment 33

8.8 "WITH JACKET" TEST SEQUENCE 34

8.9 TEST INSPECTION 35

8.10 THERMAL TEST (10 CFR 71.73(C)(4)) 36
8.10.1 Physical Thermal Test Set-up 36
8.10.2 Thermal Test Assessment 37

8.11 FINAL TEST INSPECTION 38

8.12 TEST SPECIMEN STORAGE 39

SECTION 9 WORKSHEETS 40

List of Figures and Tables

Fig. 2.1 Model 880 Projector Transport Package

Fig. 2.2 Model 880 Projector with Jacket

Fig. 8.5.2.1 Specimen TP108(A) Orientation for the 1.2m Drop Test

Fig. 8.5.3.1 Specimen TP108(B) Orientation for the 1.2m Drop Test

Fig. 8.5.4.1 Specimen TP108(C) Orientation for the 1.2m Drop Test

Fig. 8.6.2.1 Specimen TP108(A) Orientation for the 9m Drop Test

Fig. 8.6.3.1 Specimen TP108(B) Orientation for the 9m Drop Test

Fig. 8.6.4.1 Specimen TP108(C) Orientation for the 9m Drop Test

Fig. 8.7.2.1 Specimen TP108(A) Orientation for the Puncture Test

Fig. 8.7.3.1 Specimen TP108(B) Orientation for the Puncture Test

Fig. 8.7.4.1 Specimen TP108(C) Orientation for the Puncture Test

Test Plan No. 108

Section 1 Introduction

This document describes the mechanical test plan for the Model 880 Projector to meet NRC requirements for Type B(U)-85 packages as described in the Code of Federal Regulations, 10 CFR Part 71, revised as of March 31, 1999. The test plan also covers the criteria stated in the IAEA Regulations for the Safe Transport of Radioactive Material, Safety Series No.6 1985 Edition (As Amended 1990).

This document describes the test package specifications, testing equipment, testing scenario, justifies the package orientations for the different test specimens and provides test worksheets to record key steps in the testing sequence.

Section 2 Transport Package Description

Figure 2.1 describes the Model 880 projector transport package. Figure 2.2 shows the transport package with the plastic jacket.

The radioactive material is sealed in a special form source capsule. The source capsule, stop ball and connector are swaged to a flexible steel wire to form the source wire assembly. The source wire assembly is held securely to the device by components of the rear plate assembly. One of these components, the sleeve, in conjunction with the selector ring retainer, prevents the stop ball of the source wire from being pulled through the rear of the package. Another component, the lock slide, prevents the stop ball from being pushed out of the front when in the secured position. A cover over the source wire connector prevents access to the source assembly until a keyed lock is actuated and the cover removed. This cover is in place during transport of the package. This source assembly securing mechanism is functionally identical to the existing model 660 and 680 projector transport packages.

The selector ring retainer is fastened to the rear plate with four, #10 stainless steel machine screws. The rear plate is attached to rivnuts assembled on the endplate weldment with four 5/16-18 stainless steel security screws. The endplate weldment consists of the endplate disc, a U-shaped bracket and the four rivnuts. The U-brackets are welded to the endplate disc and the endplate disc is welded to the cylindrical shell.

The shield is fastened within the device at each end by a titanium shield pin. The pin passes through the shield and the U-bracket. The shield is centered in the shell and has the source tube cast into its center. The source tube provides a cavity for the source wire assembly to travel through during use. The source capsule is positioned at the center of the ball of the shield within the source tube cavity when the source wire is in its secured position.

The model 880 uses polyurethane foam to fill the cavity around the depleted uranium shield. The foam prevents contamination to and from the depleted uranium shield.

Previous thermal tests have shown charred polyurethane foam will inhibit the flow of oxygen to the shield and prevent oxidation from occurring during a fire as long as the foam remains confined. This is shown on AEA Technology QSA Test plan number 70.

It has also been shown the charred foam will not support the shield at temperatures of 800°C. The model 880 relies on the shield pins to hold the shield in place at all times. These pins are designed to retain the shield throughout testing without the added support of the foam.

The outlet port, located at the front end, serves to block access into or out of the source tube cavity. Four stainless steel security screws fix the front plate to the endplate rivnuts.

The plastic jacket is not part of the Type B transport package and therefore not considered for the type B transport testing. The absence of the jacket will present a worst case 30-foot drop and puncture test condition. In a drop, the plastic jacket protects the transport package from further damage by absorbing energy upon impact.

However, since the jacket will usually be on the package during transport and its weight will add approximately 4lbs, one specimen will be tested with the jacket. The "with jacket" 30-foot drop and puncture orientations will be based on damage observed from previously selected orientations and speculative damaging effects the jacket may have on the safety aspects of the package.

The weight of the Model 880 transport package without the jacket is not greater than 46 pounds. The total weight of the package with the jacket is not greater than 50 pounds.

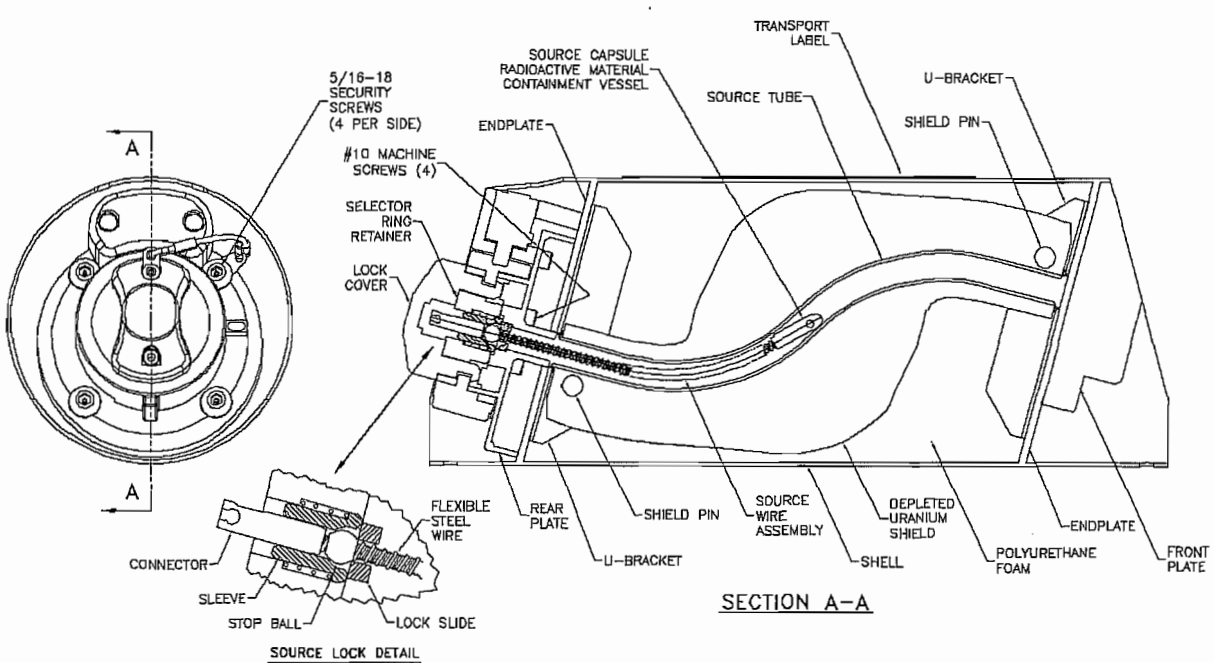

FIGURE 2.1: MODEL 880 PROJECTOR TRANSPORT PACKAGE.

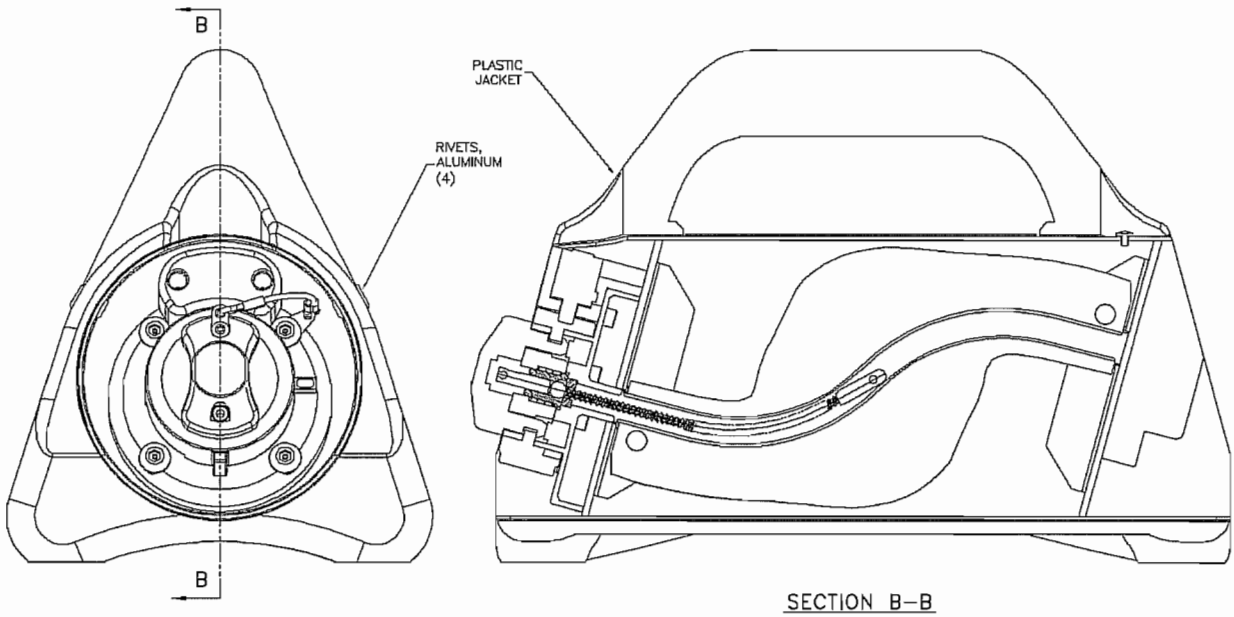

FIGURE 2.2: MODEL 880 PROJECTOR WITH JACKET.

Section 3 Regulatory Compliance

The purpose of this plan, which was developed in accordance with AEA Technology QSA SOP-E005, is to demonstrate that the Model 880 projector complies with the Type B(U)-85 transport package test requirements of 10 CFR 71 and the IAEA Safety Series No.6.

The tests for Normal Conditions of Transport (10 CFR 71.71) were performed under AEA Technology QSA test plan number 100. However, the 4-foot drop will be performed as the first test to produce typical damage that might occur during normal transport conditions. The 4-foot drop of test plan number 100 was the only test to produce any significant damage to the package.

The water spray preconditioning of the package will not be performed as the Model 880 projector is constructed of waterproof materials throughout. The water spray would not contribute to any degradation in structural integrity.

The Hypothetical Accident Tests (10 CFR 71.73) to be performed are the 9m (30 foot) free drop test and the puncture test.

The crush test (10 CFR 71.73(c)(2)) will not be performed because the radioactive contents are qualified as Special-Form radioactive material.

The thermal test of (10 CFR 71.73(c)(4)) will either be evaluated using a finite element analysis model or subjected to a simulated fire test in an oven at 800°C for at least 30 minutes.

The melting points for the materials of the package are listed below:

Material	Melting Point
Stainless steel	1390°C (2530°F)
Depleted uranium	1135°C (2075°F)
Titanium	1700°C (3100°F)
Tungsten	3410°C (6170°F)
Copper/Brass	1080°C (1980°F)
Aluminum	580°C (1080°F)
Rubber/Plastic	Less than 540°C (1000°F)

The immersion test will not be performed. Only the source capsule (containment vessel) is sealed and able to pressurize as a result of 50 feet of water depth. The source capsule is designed and tested to withstand external pressures well in excess of 22 lbf/in^2.

Section 4 Discussion on System Failure Modes of Interest

4.1 General

The tests in this plan focus on damaging those components of the package which could cause displacement of the source from its stored position within the depleted uranium shield and which affect the integrity of the shield itself.

4.2 Normal and Accident Conditions of Transport

The modes of failure under normal and accident conditions that could lead to elevated dose rates include the following:

4.2.1 Fracture or penetration of the projector weldment.

4.2.2 Displacement of the shield within the projector weldment and distortion or fracture of the source.

4.2.3 Failure of the source lock assembly and/or lock mounting screws.

The test conditions specified in this Test Plan are intended to challenge the ability of the Model 880 package with respect to these failure modes.

Section 5 Assessment of Package Conformance

5.1 Regulatory Requirements

5.1.1 Normal Conditions of Transport (71.43(f))

There should be no loss or dispersal of radioactive contents, no significant increase in external surface radiation levels and no substantial reduction in the effectiveness of the packaging.

IAEA Safety Series No. 6 para. 537 stipulates the same criteria except that it states in paragraph 537(b) that the loss of shielding integrity should not result in more than a 20% increase in the radiation level at any external surface of the package.

5.1.2 Hypothetical Accident Conditions (71.51(a))

There should be no escape of radioactive materials greater than A_2 in one week and no external dose rate greater than 1 R/hr at 1m from the external surface with the maximum radioactive contents which the package is designed to carry.

5.2 Test Package Contents

The Model 880 projector is designed to carry a special form source. Containment of the radioactive source is tested at manufacture. The source capsule design has been certified in accordance with the performance requirements for special form as specified in 10 CFR Part 71 and IAEA Safety Series #6.

This test plan therefore does <u>not</u> discuss/specify tests of the containment of the radioactive source. The purpose of the tests is to demonstrate that the source remains shielded within the limits specified by the regulations.

Since source integrity has been demonstrated through special form testing, a simulated source will be used during testing of the package. The radiation levels after testing will be measured by replacing the simulated source with an active source. The post-test measurements will be compared with pre-test measurements to verify the source has not shifted within the shield.

Section 6 Construction and Condition of Test Specimens

The Model 880 transport package test specimens will be constructed in accordance with AEA Technology QSA drawing B88015 revision A and the AEA Technology QSA Quality Assurance Program. The weight of the test specimens per this drawing is not greater than 46 pounds.

The "With Jacket" test specimen will be constructed in accordance with AEA Technology QSA drawing B88000 revision A and the AEA Technology QSA Quality Assurance Program. This specimen is the same as the specimen built to drawing B88015 revision A, but with the plastic jacket and rivets added. The weight of the "With Jacket" test specimen is not greater than 50 pounds.

The structural materials of the Model 880 are made of AISI Type 300 series stainless steel and titanium. The shielding materials are depleted uranium and tungsten. The non-safety related parts are made from aluminum, brass, copper, plastic, and rubber.

Except for the thermal test, all tests of this plan will subject the test specimen to an impact from a drop. The mechanical strength and ductility of the critical components of the package must continue to perform as expected at the ambient temperature conditions of –40°F to 100°F.

The fracture toughness, strength and ductility, of the structural materials in the Model 880 does not change significantly at or between the temperatures of –40°F to 100°F. The shielding materials are relatively brittle throughout this entire temperature range. Therefore, any temperature within the –40°F to 100°F range for the 4-foot, 30-foot, and puncture tests will have the same result. So, the test specimen will be dropped at ambient temperature at time of testing.

The internal operating pressure of the containment system, namely the source capsule, is considered to be in equilibrium with the outside pressure of the package. The sealed capsule is welded at atmospheric pressure and except for the capsule, the package is open to the atmosphere. Therefore, the initial internal pressure of the containment system is considered to be insignificant.

Section 7 Material and Equipment List

The equipment list worksheets in Section 9 identify the equipment required, with additional space to list other necessary equipment and measuring instruments needed to perform the tests. Additional materials and equipment used to facilitate the tests will be listed as needed.

Section 8 Test Procedure

8.1 General

All test specimens are to be tested in the sequence presented below. Each test has been designed to check the integrity of various components of the package. An assessment of transport integrity of the package can be made based on the cumulative effect of the tests performed on the package

After completing the 4-foot, 30-foot, and puncture drop test sequence on all three specimens, a "With Jacket" test specimen will follow the same drop sequence. The "With Jacket" test specimen will have an orientation chosen from either the first three orientations or another orientation selected to produce the most damage to the package. The justification and description for this orientation shall be documented.

The tests have the following sequence:

1. Test specimen preparation and inspection
2. 1.2m (Four-foot) free drop test (10 CFR 71.71(c)(7))
3. 9m (30-foot) free drop test (10 CFR 71.73(c)(1))
4. Puncture test (10 CFR 71.73(c)(3))
5. Test inspection.
6. Thermal test or analysis (10 CFR 71.73(c)(4)).
7. Final test inspection and/or assessment.
8. Test specimen storage.

8.2 Roles and Responsibilities

The responsibilities of the groups identified in this plan are:

- **Engineering** executes the tests according to the test plan and summarizes the test results. Engineering also provides technical input to assist Regulatory Affairs and Quality Assurance as needed.

- **Regulatory Affairs** monitors the tests and reviews test reports for compliance with regulatory requirements.

- **Quality Assurance** oversees test execution and test report generation to assure compliance with the AEA Technology QSA Quality Assurance Program.

- **Engineering, Regulatory Affairs** and **Quality Assurance** are jointly responsible for assessing test and specimen conditions relative to 10 CFR 71 and IAEA Safety Series #6.

- **Quality Control** is responsible for ensuring test and specimen data is measured and recorded throughout the test cycle.

8.3 Test Specimen Preparation and Inspection

1. Manufacture five Model 880 projectors per AEA Technology QSA drawing number B88015, revision A. Clearly and indelibly mark each specimen: "TP108(X)". Where X is an alphabetically incremented letter beginning with "A". One of the five projectors will be used as a spare and used to replace a specimen dropped onto the wrong impact point, if necessary. The spare, if used, will follow the same test sequence as the initially selected specimen.

2. Measure and record the weight of each specimen.

3. Inspect the test specimens to ensure that:

   - All fabrication and inspection records are documented in accordance with the AEA Technology QSA Quality Assurance Program.

   - The test specimens comply with the requirements of the drawing.

4. Measure and record the location of the source from the front plate using the source location tool.

5. Perform and record the radiation profile in accordance with AEA Technology QSA Work Instruction WI-Q09.

6. **Engineering**, **Regulatory Affairs** and **Quality Assurance** will jointly verify that the test specimens comply with the drawings and the AEA Technology QSA Quality Assurance Program.

7. Prepare the test specimens for transport.

8.4 Summary of Test Schedule

This section provides an overall view of the test specimen orientations for each test.

Normal Conditions Test	Para.	Specimen	Diagram
1.2m Drop 1.	71.71(c)(7)	TP108(A)	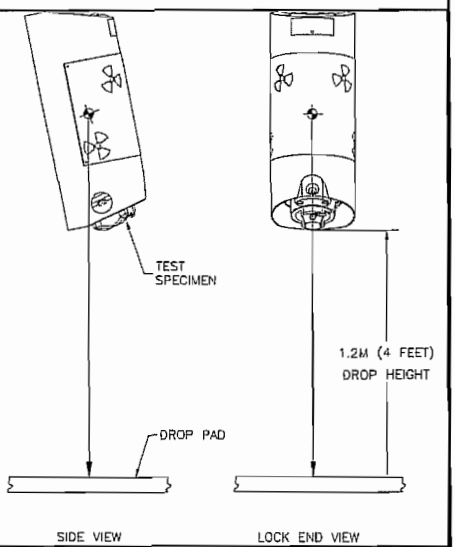
1.2m Drop 2.	71.71(c)(7)	TP108(B)	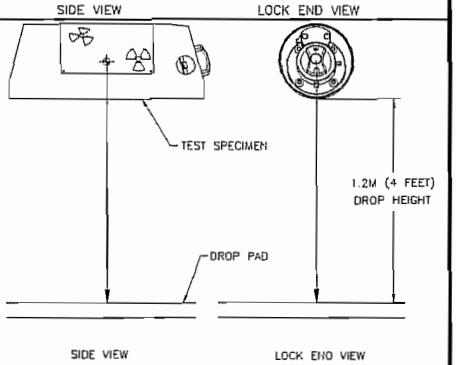
1.2m Drop 3.	71.71(c)(7)	TP108(C)	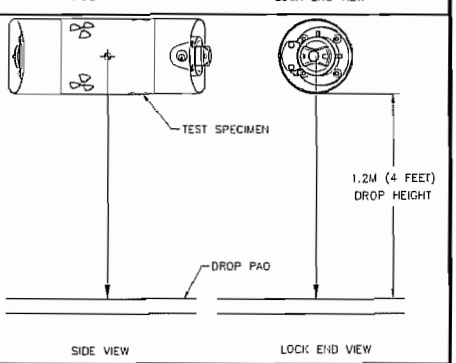

Accident Conditions Test	Para.	Specimen	Diagram
9m Drop 1.	71.73(c)(1)	TP108(A)	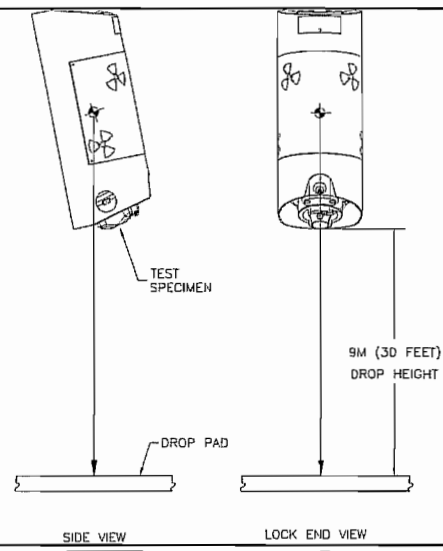
9m Drop 2.	71.73(c)(1)	TP108(B)	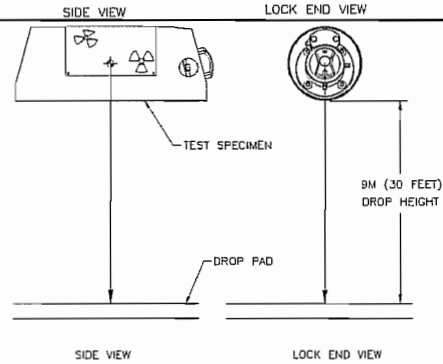
9m Drop 3.	71.73(c)(1)	TP108(C)	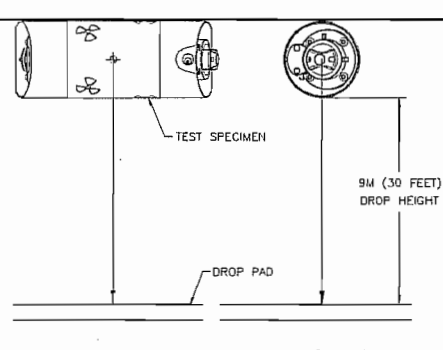

Puncture 1.	71.73(c)(3)	TP108(A)	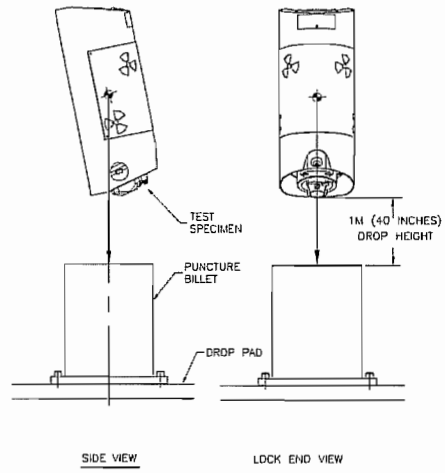
Puncture 2.	71.73(c)(3)	TP108(B)	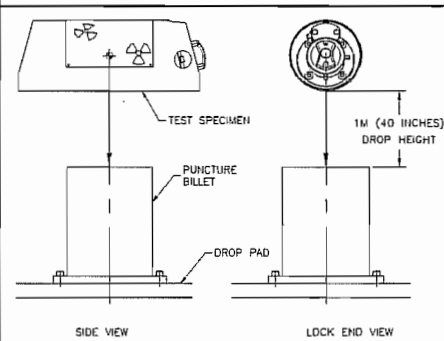
Puncture 3.	71.73(c)(3)	TP108(C)	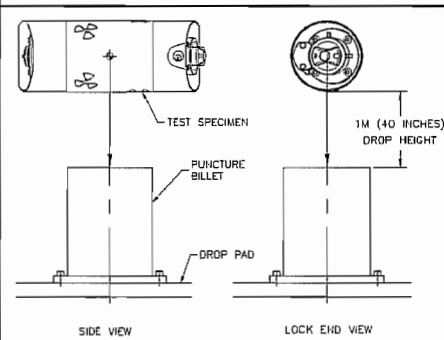

8.5 1.2m (4-foot) Free Drop Test (10 CFR 71.71(c)(7))

The Normal Transport Conditions Test is the 1.2m (4-foot) free drop test as described in 10 CFR 71.71(c)(7).

The figures of section 8.5.2.1, 8.5.3.1, and 8.5.4.1 illustrate the orientations for the test specimens.

8.5.1 1.2m Free Drop Test Set-up

To set up a package for the 1.2m (4-foot) drop test:

1. Place each specimen on the drop surface and position it according to the specimen-specific orientation shown in Figure 8.5.2.1, Figure 8.5.3.1, or Figure 8.5.4.1

2. Raise the package so that the impact target is 1.2m (4 feet) above the drop surface. Ensure the center of gravity is over the impact point

3. Measure and record the ambient temperature.

4. Photograph the set-up.

5. Start the video recorder.

6. Drop the package.

7. Stop the video recorder.

8. Record the damage to the package and take a photographic record.

8.5.2 Specimen TP108(A) Orientation for the 1.2m Drop Test

Figure 8.5.2.1 shows the package orientation for Specimen TP108(A). The object of the drop is to use the shell lip as leverage to drive the rear plate across the endplate to shear the rear plate mounting screws. This drop is meant to stiffen the impact area to reduce energy absorption during the 30-foot drop test.

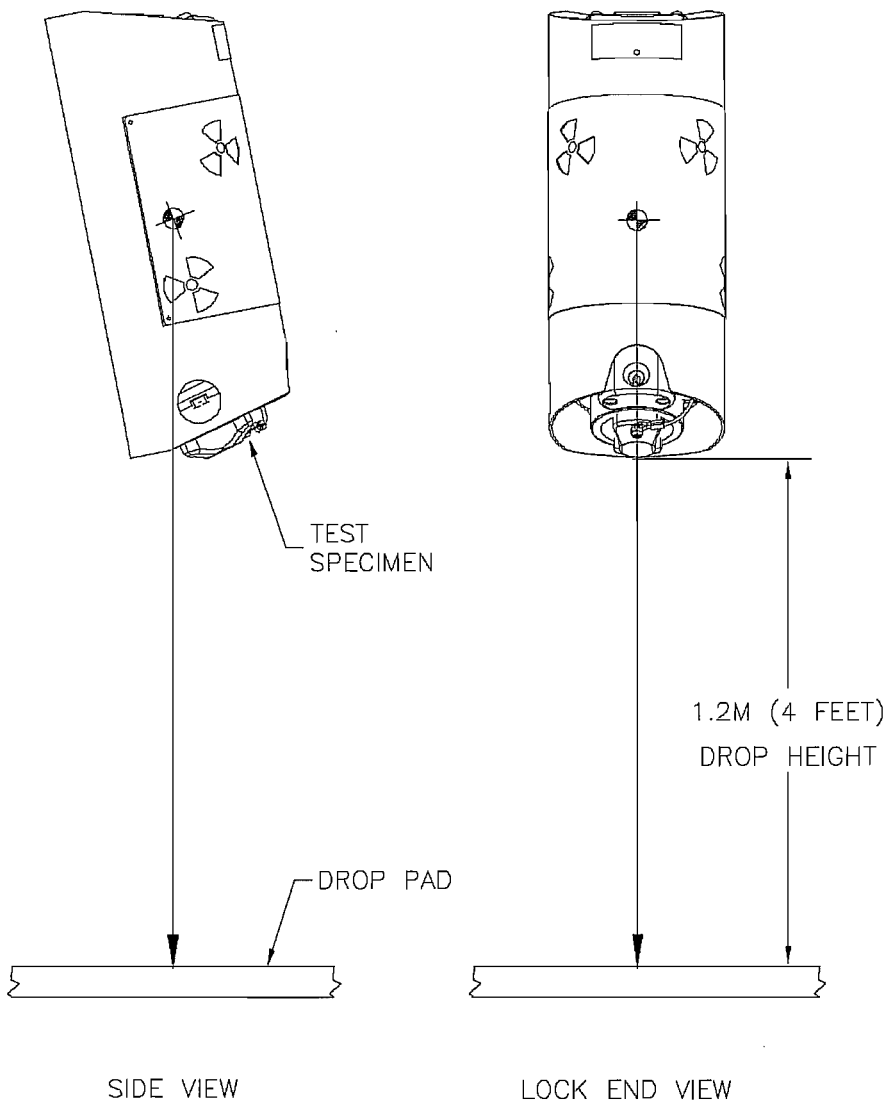

Figure 8.5.2.1: Specimen TP108(A) Orientation for the 1.2m Drop Test

8.5.3 Specimen TP108(B) Orientation for the 1.2m Drop Test

Figure 8.5.3.1 shows the package orientation for Specimen TP108(B). The object of this drop is to test the integrity of the shield pins and to determine the effect of the drop on the depleted uranium shield.

The specimen will be dropped with its axis parallel to the drop surface onto the cylindrical shell with the transport label facing up.

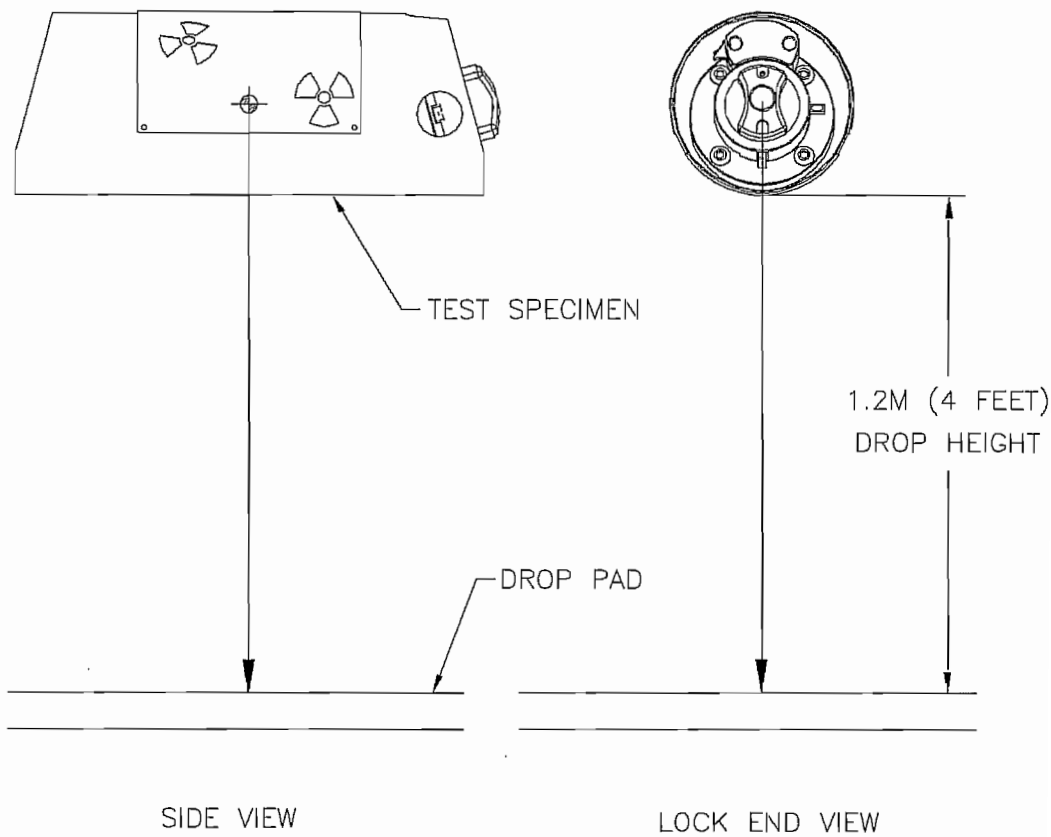

Figure 8.5.3.1: Specimen TP108(B) Orientation for the 1.2m Drop Test

8.5.4 Specimen TP108(C) Orientation for the 1.2m Drop Test

Figure 8.5.4.1 shows the package orientation for Specimen TP108(C). The object of this drop is to test the integrity of the U-brackets and to determine the effect of the drop on the depleted uranium shield.

The specimen will be dropped with its axis parallel to the drop surface onto the cylindrical shell with the transport label facing out to the side.

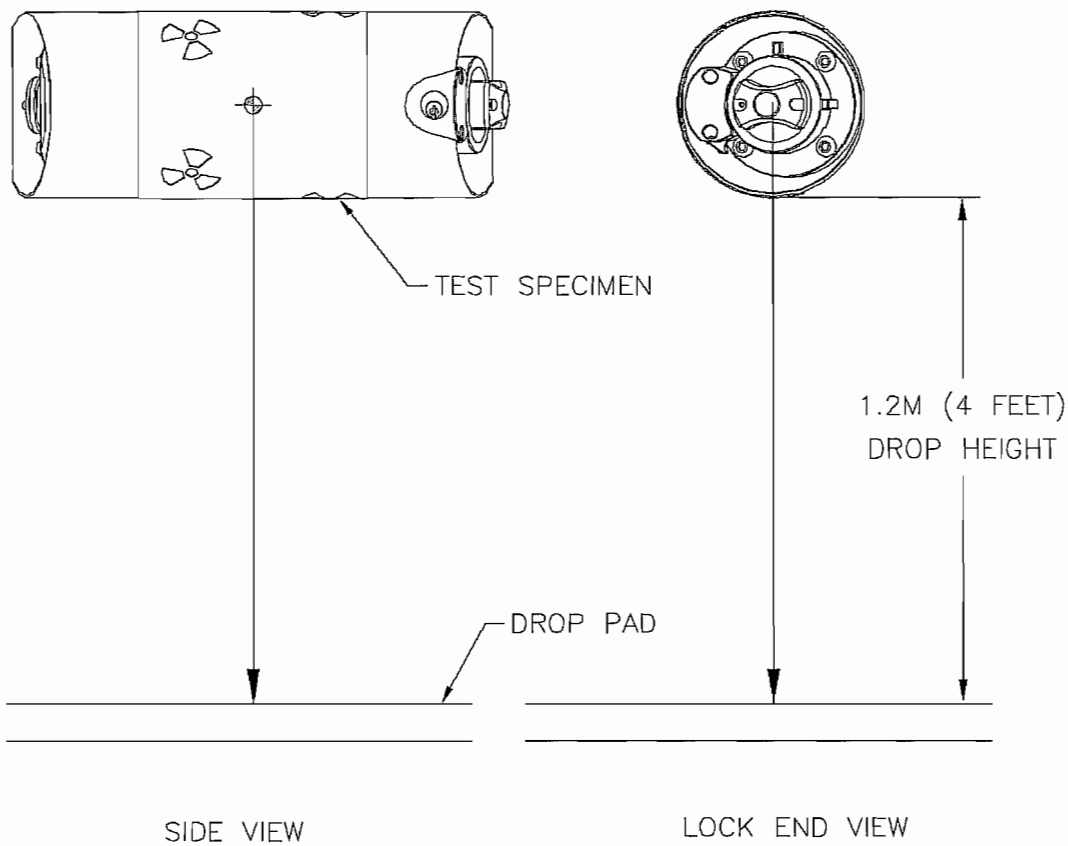

Figure 8.5.4.1: Specimen TP108(C) Orientation for the 1.2m Drop Test

8.5.5 1.2m Free Drop Test Assessment

Upon completion of each test, **Engineering**, **Regulatory Affairs** and **Quality Assurance** team members will jointly take the following actions:

- Review the test execution to ensure that each test was performed in accordance with 10 CFR 71, IAEA Safety Series #6, and this test plan.
- Make a preliminary evaluation of the specimens relative to the requirements of 10 CFR 71 and IAEA Safety Series #6.
- Assess the damage to each specimen to decide whether testing of that specimen is to continue.
- Evaluate the condition of each specimen to determine what changes, if any, are necessary in package orientation in the 30-foot drop test to achieve maximum damage.

8.6 9m Free Drop Test (10 CFR 71.73(c)(1))

The first Hypothetical Accident Test is the 9m (30-foot) free drop test as described in 10 CFR 71.73(c)(1).

The figures of section 8.6.2.1, 8.6.3.1, and 8.6.4.1 illustrate the orientations for the test specimen.

8.6.1 9m Free Drop Test Set-up

To set up a package for the 9m (30-foot) drop test:

1. Measure and record the weight of each of the test specimens.
2. Place each specimen on the drop surface and position it according to the specimen-specific orientation as shown in Figure 8.6.2.1, Figure 8.6.3.1, or Figure 8.6.4.1.
3. Raise the package so that the impact target is 9m (30 feet) above the drop surface. Ensure the center of gravity is over the impact point
4. Measure and record the ambient temperature.
5. Photograph the set-up.
6. Start the video recorder.
7. Drop the package.
8. Stop the video recorder.
9. Record the damage to the package and take a photographic record.

8.6.2 Specimen TP108(A) Orientation for the 9m Drop Test

Figure 8.6.2.1 shows the package orientation for Specimen TP108(A). The object of the drop is to use the shell lip as leverage to drive the rear plate across the endplate to shear the rear plate mounting screws.

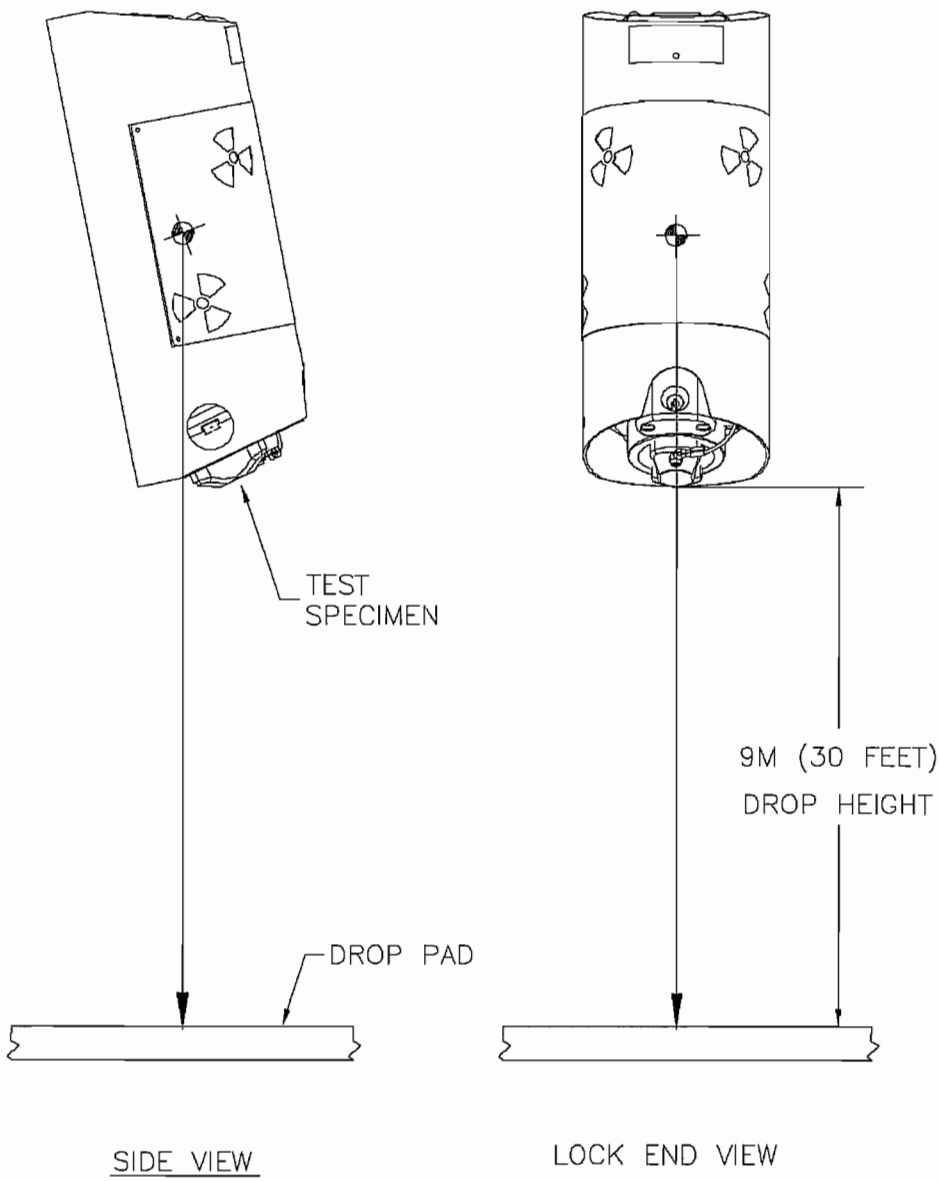

Figure 8.6.2.1: Specimen TP108(A) Orientation for the 9m Drop Test

8.6.3 Specimen TP108(B) Orientation for the 9m Drop Test

Figure 8.6.3.1 shows the package orientation for Specimen TP108(B). The object of this drop is to test the integrity of the shield pins and to determine the effect of the drop on the depleted uranium shield.

The specimen will be dropped with its axis parallel to the drop surface onto the cylindrical shell with the transport label facing up.

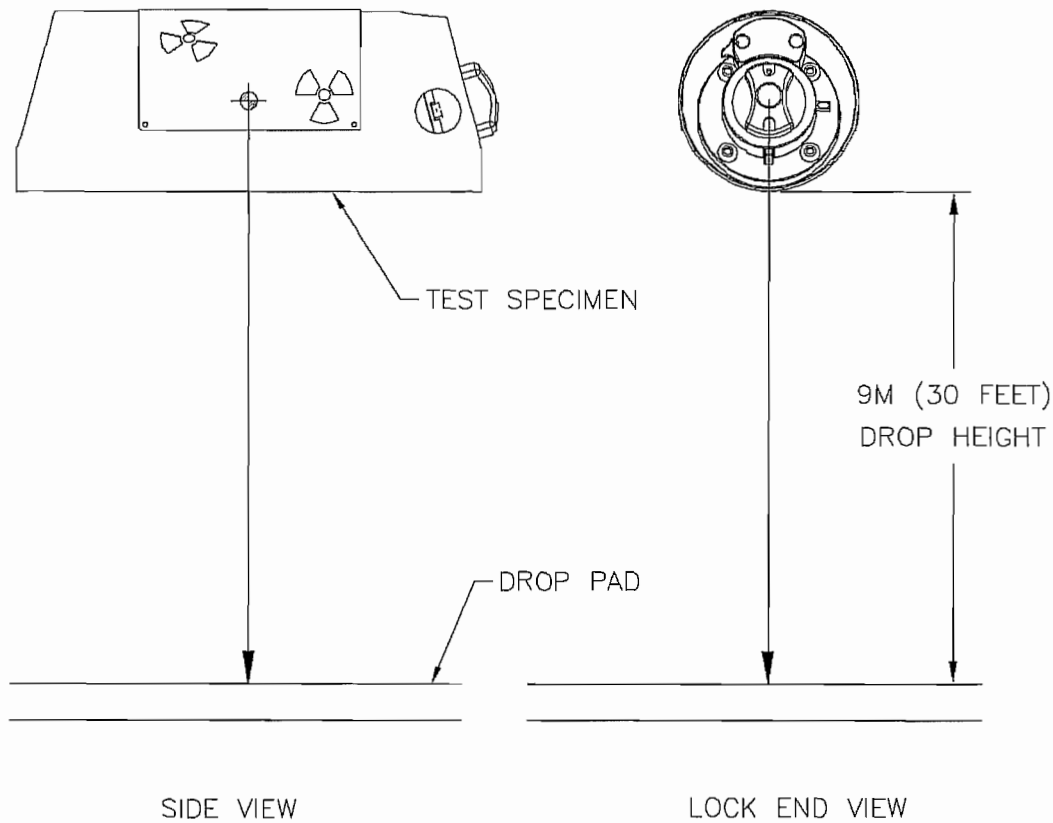

Figure 8.6.3.1: Specimen TP108(B) Orientation for the 9m Drop Test

8.6.4 Specimen TP108(C) Orientation for the 9m Drop Test

Figure 8.6.4.1 shows the package orientation for Specimen TP108(C). The object of this drop is to test the integrity of the U-brackets and to determine the effect of the drop on the depleted uranium shield.

The specimen will be dropped with its axis parallel to the drop surface onto the cylindrical shell with the transport label facing out to the side.

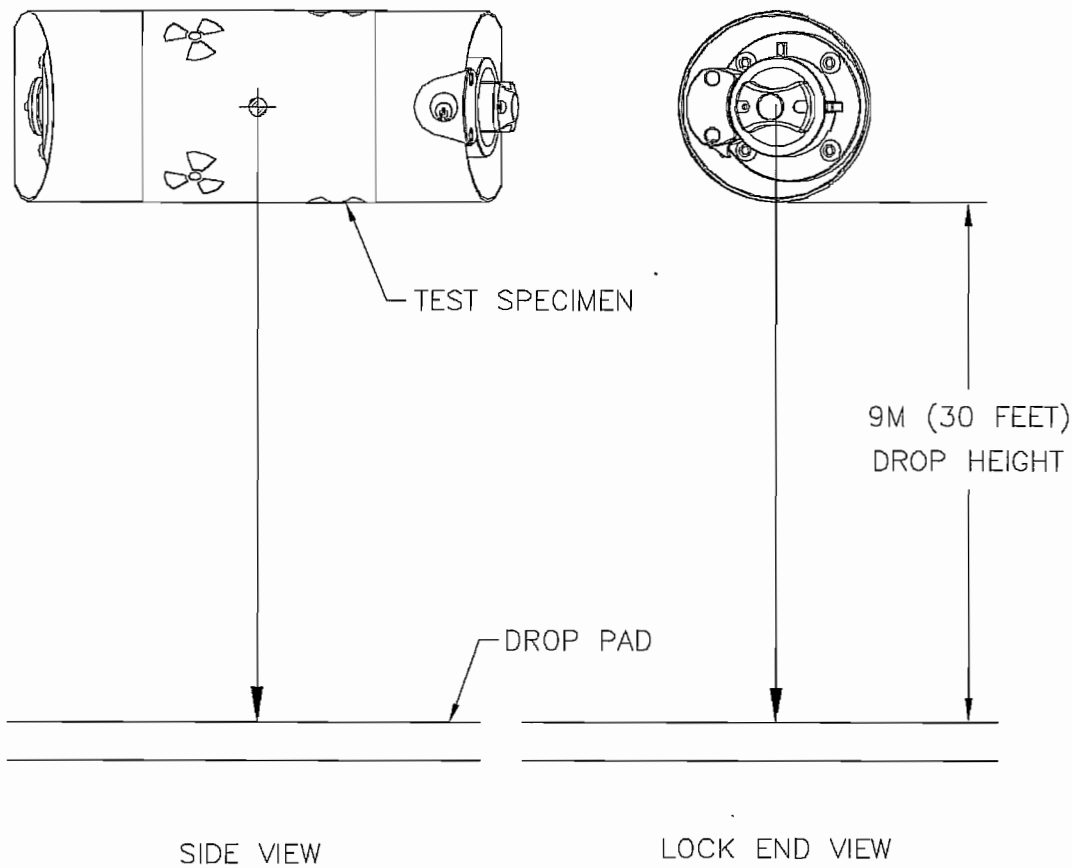

Figure 8.6.4.1: Specimen TP108(C) Orientation for the 9m Drop Test

8.6.5 9m Free Drop Test Assessment

Upon completion of each test, **Engineering**, **Regulatory Affairs** and **Quality Assurance** team members will jointly take the following actions:

- Review the test execution to ensure that each test was performed in accordance with 10 CFR 71, IAEA Safety Series #6, and this test plan.
- Make a preliminary evaluation of the specimens relative to the requirements of 10 CFR 71 and IAEA Safety Series #6.
- Assess the damage to each specimen to decide whether testing of that specimen is to continue.
- Evaluate the condition of each specimen to determine what changes, if any, are necessary in package orientation in the puncture test to achieve maximum damage.

8.7 Puncture Test (10 CFR 71.73(c)(3))

The package is dropped from a height of 1m (40") onto the puncture billet. This test uses the 12" high puncture billet. The billet meets the minimum height (8") required in 10 CFR 71.73(c)(3). The specimen has no projections or overhanging members longer than 12" which could act as impact absorbers, allowing the billet to cause the maximum damage to the specimen. The billet is to be bolted to the drop surface used in the drop tests.

The figures: 8.7.2.1, 8.7.3.1, and 8.7.4.1 illustrate the orientations for each puncture test.

The justification for each puncture orientation is the same as the orientation for the 30-foot drop test. If the orientation needs to be changed, the new orientation must be documented and approved with a justification describing how it would be a worst condition than the planned orientation.

8.7.1 Puncture Test Set-up

NOTE: *Because each test is designed to add to damage inflicted on a specific component or assembly in the preceding test, it is important that each specimen maintain its identity throughout the battery of tests and that the set-up instructions specific to the specimen are strictly followed.*

To set up a package for the puncture test:

1. Measure and record the weight of the test specimen.
2. Measure and record the ambient temperature.
3. Position the test package according to the specimen-specific orientation shown in figures 8.7.2.1, 8.7.3.1, or 8.7.4.1.
4. Raise the package so that the impact target is 1m (40") between the impact point on the package and the top of the puncture billet. Ensure the center of gravity is over the impact point
5. Photograph the set-up.
6. Start the video recorder.
7. Drop the package.
8. Stop the video recorder.
9. Record the damage to the package and take a photographic record.

8.7.2 Specimen TP108(A) Orientation for the Puncture Test

The objective of this drop orientation (Figure 8.7.2.1) is to continue the damage inflicted on the specimen by the 9m-drop test.

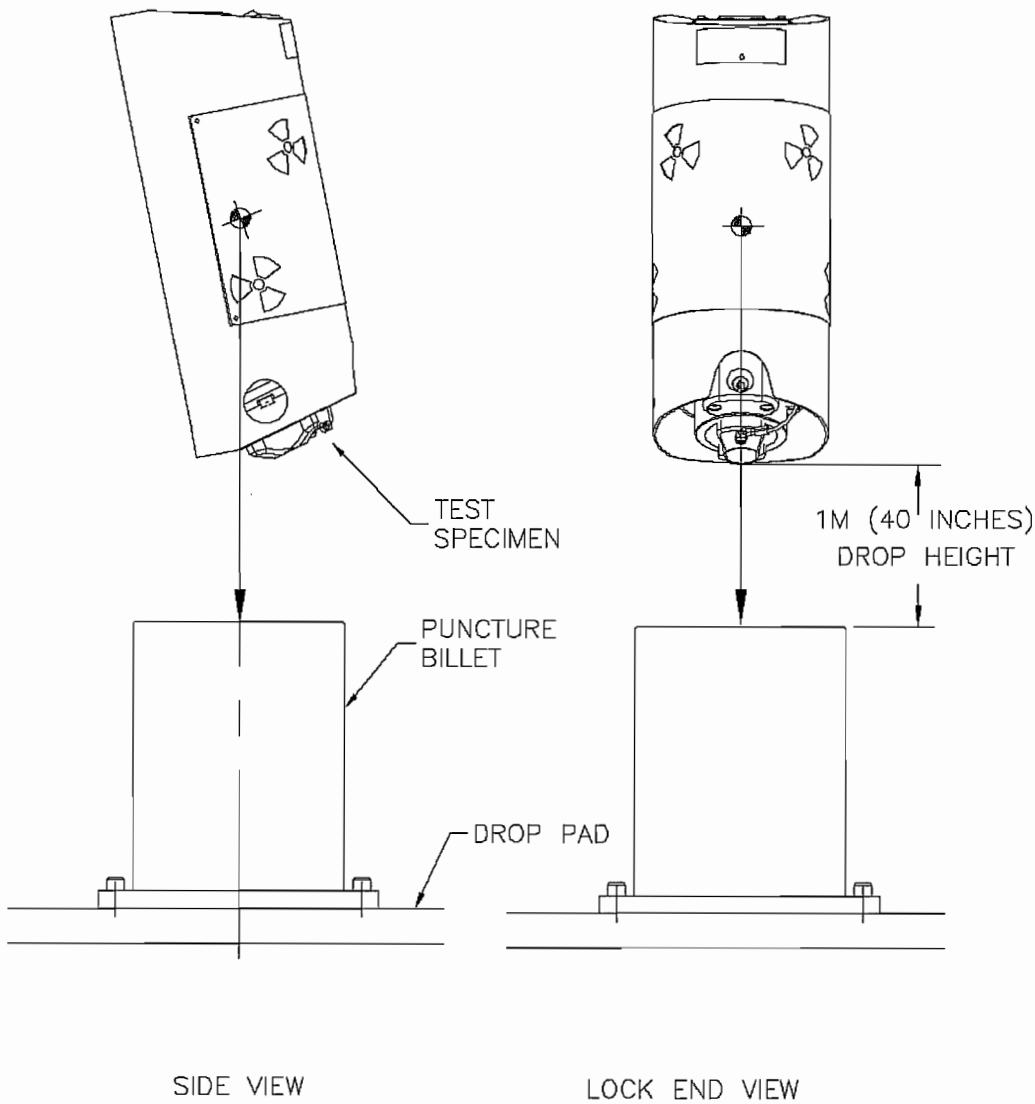

Figure 8.7.2.1: Specimen TP108(A) Orientation for the Puncture Test

8.7.3 Specimen TP108(B) Orientation for the Puncture Test

The objective of this drop orientation (Figure 8.7.3.1) is to continue the damage inflicted on the specimen by the 9m-drop test.

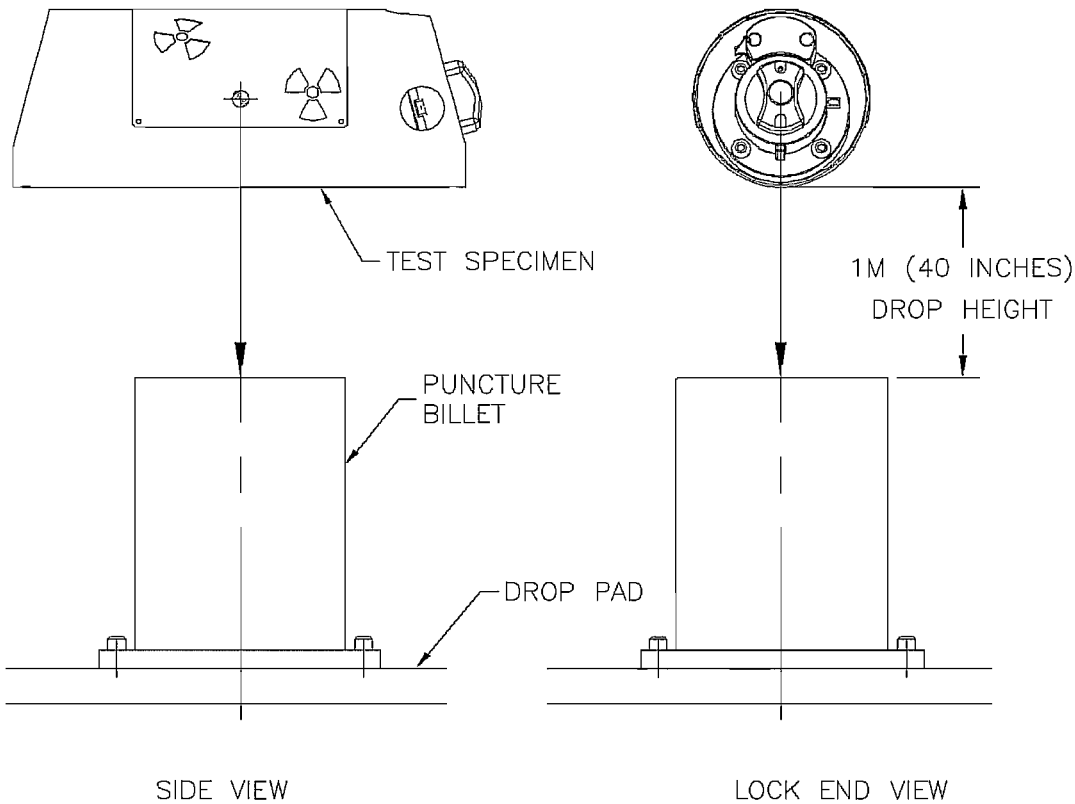

Figure 8.7.3.1: Specimen TP108(B) Orientation for the Puncture Test

8.7.4 Specimen TP108(C) Orientation for the Puncture Test

The objective of this drop orientation (Figure 8.7.4.1) is to continue the damage inflicted on the specimen by the 9m-drop test.

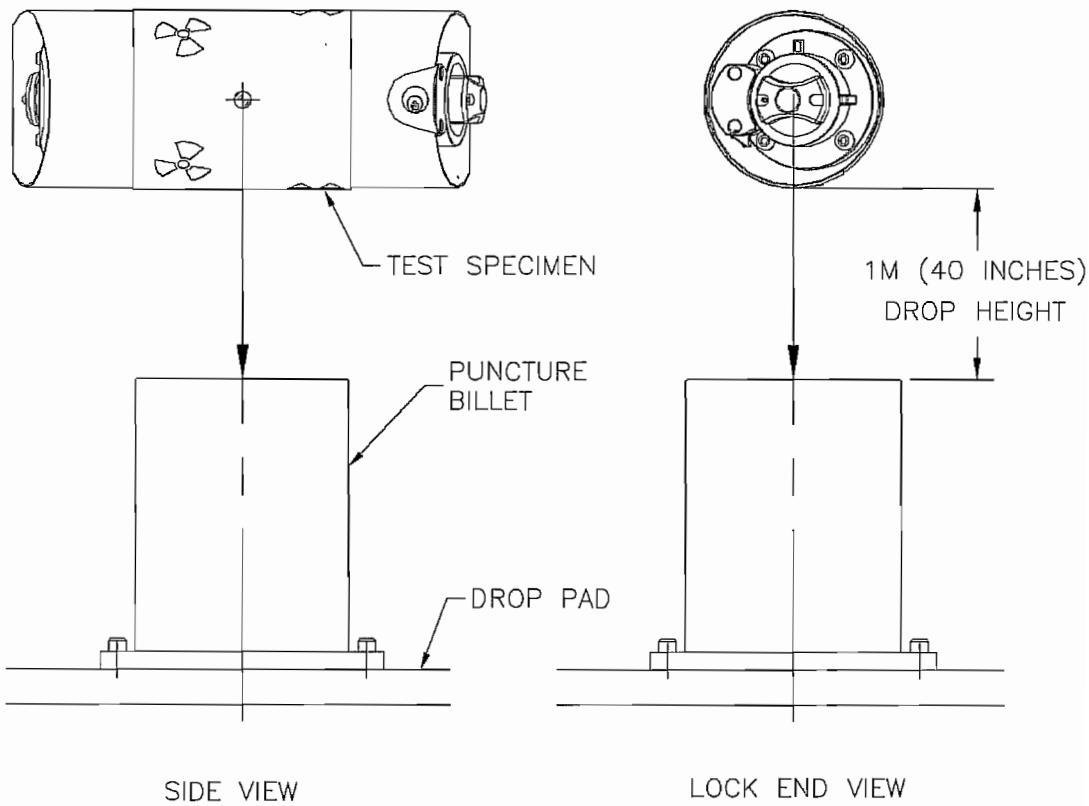

Figure 8.7.4.1: Specimen TP108(C) Orientation for the Puncture Test

8.7.5 Puncture Test Assessment

Upon completion of the test, **Engineering**, **Regulatory Affairs** and **Quality Assurance** team members will jointly take the following actions:

- Review the test execution to ensure that the tests were performed in accordance with 10 CFR 71, IAEA Safety Series #6, and this test plan.
- Make a preliminary evaluation of each specimen relative to the requirements of 10 CFR 71 and IAEA Safety Series #6.
- Justify and describe the orientation for the "With Jacket" test specimen test sequence.

8.8 "With Jacket" Test Sequence

Repeat the 4-foot, 30-foot, and puncture drop test sequence on the "with jacket" test specimen per the orientation determined in section 8.7.5. Document and justify the selected orientation.

8.9 Test Inspection

Perform the test inspection after the puncture tests.

1. Measure and record the damage to each of the test specimens. Measure and record the package for signs of any permanent strain.

2. Measure and record the location of the source from the front plate using the source location tool.

3. Remove and assess the condition of the simulated source.

4. Reassemble the packages using a representative active source, making sure that the source position and the package configuration are the same as they were immediately after the puncture test.

5. Measure and record a radiation profile of each test specimen in accordance with AEA Technology QSA Work Instruction WI-Q09.

6. Assess the significance of any change in radiation at the surface and at one meter from the packages.

7. Determine whether it is necessary to radiograph the test specimens for inspection of hidden component damage or failure.

8. Record any damage or failure found in radiograph of the test specimens, if performed.

8.10 Thermal Test (10 CFR 71.73(c)(4))

The thermal test shall be evaluated using either a finite element thermal analysis or a physical test. Either shall be performed to the requirements of 10 CFR 71.73 (c)(4).

The thermal test specimen orientation will be determined on an assessment performed after the puncture test. The documented justification must consider the worst case position for the specimen due to the damage inflicted from the previous tests.

If a finite element analysis is to be performed, no further actions are required under this section and proceed to section 8.11.

If a physical test is to be performed, complete section 8 of this test plan. The test environment will be a vented oven operating above 800°C. There will sufficient airflow to allow combustion. Air will be allowed to enter the oven through the door opening. The temperature of the package's exterior surface closest to the air entry point will be monitored throughout the test to ensure that the package remains above 800°C.

If the specimen is burning when it is removed, the unit is allowed to extinguish by itself and then cool naturally. The final evaluation of the package shall be performed when the specimen reaches ambient temperature.

8.10.1 Physical Thermal Test Set-up

To set up a package for the thermal test:

1 Heat the oven above 800°C.

2 Attach thermocouples to the package's external surface.

3 Place the package in the oven and close the door.

4 When all thermocouples indicate 800°C, start the 30-minute timer.

5 Measure and record the oven and test specimen temperatures.

6 Monitor the specimen and oven temperature throughout the 30-minute test period to ensure that all temperatures remain above 800°C.

7 At the end of 30-minutes, remove the specimen from the oven.

8 Allow the specimen to self-extinguish and cool.

9 Photograph and weigh the test specimen.

8.10.2 Thermal Test Assessment

Upon completion of the test, **Engineering**, **Regulatory Affairs** and **Quality Assurance** team members will jointly take the following actions:

- Review the test execution to ensure that the tests were performed in accordance with 10 CFR 71, IAEA Safety Series #6, and this test plan.

- Make a preliminary evaluation of each specimen relative to the requirements of 10 CFR 71 and IAEA Safety Series #6.

8.11 Final Test Inspection

Perform the following inspection after the thermal test.

1. Measure and record the damage to each of the test specimens.

2. Measure and record the location of the source from the front plate using the source location tool.

3. Remove and assess the condition of the simulated source.

4. Reassemble the packages using a representative active source, making sure that the source position and the package configuration are the same as they were immediately after the thermal test.

5. Measure and record a radiation profile of each test specimen in accordance with AEA Technology QSA Work Instruction WI-Q09.

6. Assess the significance of any change in radiation at the surface and at one meter from the packages.

7. Determine whether it is necessary to dismantle either of the test specimens for inspection of hidden component damage or failure.

8. If the decision is taken to proceed with the inspection, record and photograph the process of removing any component.

9. Measure and record any damage or failure found in the process of dismantling the test specimens.

Engineering, **Regulatory Affairs**, and **Quality Assurance** team members will make a final assessment of each test specimen and jointly determine whether the specimens meet the requirements of 10 CFR 71 and IAEA Safety Series #6.

8.12 Test Specimen Storage

Place the test specimens in an appropriate container and store the container in the "low level" waste room. Dispose the test specimens only when the governing regulatory body provides written authorization to do so.

Section 9 Worksheets

Use the following worksheets for executing the tests of section 8. Each test shall have three worksheets; an equipment list, a procedure checklist, and a data sheet. Record the information onto copies of these worksheets for each test performed.

Attach a copy of the relevant inspection report or calibration certificate after the range and accuracy of the equipment has been verified.

Drop & Puncture Test Equipment List

Test:		
Description *** Mark NA when not used.**	**Enter the Model and Serial Number**	**Attach Inspection Report or Calibration Certificate**
Test Specimen, Drawing No.		
Drop Surface, Drawing No.		
* Puncture Billet, Drawing No.		
Record any additional tools used to facilitate the test and attach the appropriate inspection report or calibration certificates.		
Signature	**Print Name**	**Date**
Completed by:		
Verified by:		

Drop & Puncture Test Checklist

Test:		
Test Location:		
Step	**Data**	**Measuring Instrument**
1. Record test specimen serial number:		
2. Record the test specimen weight:		
3. Record the ambient temperature (°C):		
4. Record set-up orientation figure:		
5. Verify set-up orientation and drop height.		
6. Photograph set-up in at least two perpendicular planes.		
7. Begin video recording of the test so that impact is recorded.		
8. Release the test specimen.		
9. Stop the video recorder. Ensure the point of impact and orientation specified in the plan has been achieved.		
10. Record the damage to the test specimen on a separate sheet and attach.		
11. Engineering, Regulatory Affairs and Quality Assurance make a preliminary assessment relative to 10 CFR 71. Record the assessment on a separate sheet and attach.		
Test witnessed by (Signature)	**Print Name**	**Date**
Engineering:		
Regulatory Affairs:		
Quality Assurance:		

Drop & Puncture Test Data Sheet

Test Unit Model/Serial No.:	Test:
Test Date:	Test Time:
Describe drop orientation and drop height:	
Describe impact (location, rotation, etc.):	
Describe on-site inspection (damage, broken parts, etc.):	
On-site test assessment: Engineering: Regulatory: QA:	
Describe any post-test disassembly and inspection:	
Describe any change in source position:	
Describe results of radiography:	
Completed by:	Date:

Thermal Test Equipment List

Test:		
Description *** Mark NA when not used.**	**Enter the Model and Serial Number**	**Attach Inspection Report or Calibration Certificate**
Test Specimen, Drawing No.		
Thermometer		
Record any additional tools used to facilitate the test and attach the appropriate inspection report or calibration certificates.		
Signature	**Print Name**	**Date**
Completed by:		
Verified by:		

Thermal Test Checklist

Test:		
Test Location:		
Step	**Data**	**Measuring instrument**
1. Record test specimen serial number:		
2. Record the start time:		
3. Record the oven temperature(°C):		
4. Record the test specimen temperature (°C):		
5. Monitor oven and test specimen temperature.		
6. Record stop time:		
7. Record the oven temperature(°C):		
8. Record the test specimen temperature (°C):		
9. Remove test specimen, let it self extinguish and cool.		
10. Record the damage to the test specimen on a separate sheet and attach.		
11. Engineering, Regulatory Affairs and Quality Assurance make a preliminary assessment relative to 10 CFR 71. Record the assessment on a separate sheet and attach.		

Test witnessed by (Signature)	**Print Name**	**Date**
Engineering:		
Regulatory Affairs:		
Quality Assurance:		

Thermal Test Data Sheet

Test Unit Model/Serial No.:	Test:
Test Date:	Test Time:
Describe orientation:	
Describe on-site inspection (damage, broken parts, etc.):	
On-site test assessment: Engineering: Regulatory: QA:	
Describe any post-test disassembly and inspection:	
Describe any change in source position:	
Describe results of radiography:	
Completed by:	Date:

2.12.3 Test Report 108 Minus Appendices A-C (Aug 2000)

Test Report #108

Model 880 Type (B) Transport Package Test Results

TABLE of CONTENTS

SECTION 1 INTRODUCTION 3

SECTION 2 CONSTRUCTION AND ACCEPTANCE OF TEST SPECIMENS 5

SECTION 3 TEST OBJECTIVES AND ORIENTATIONS 6

SECTION 4 DROP TEST DATA 7

SECTION 5 TEST INSPECTION RESULTS 8

SECTION 6 DROP TEST RESULTS 10

SECTION 7 THERMAL ANALYSIS 11

SECTION 8 CONCLUSION 12

APPENDIX A 13

APPENDIX B 14

APPENDIX C 15

APPENDIX D 16

Section 1 Introduction

This document describes the results of the package design tests conducted in accordance with Test Plan #108.

The tests described under test plan #108 subjects the Model 880 Projector to the hypothetical accident test requirements for Type B(U)-85 packages as described in the Code of Federal Regulations, 10 CFR Part 71, revised as of March 31, 1999 and the IAEA Regulations for the Safe Transport of Radioactive Material, Safety Series No.6 1985 Edition (As Amended 1990).

This report will show the Model-880 transport package satisfies the test requirements as described in test plan #108 and therefore meets the hypothetical accident test requirements for type B(U)-85 transport packages. Additionally, the plastic jacket does not adversely affect the results of these tests.

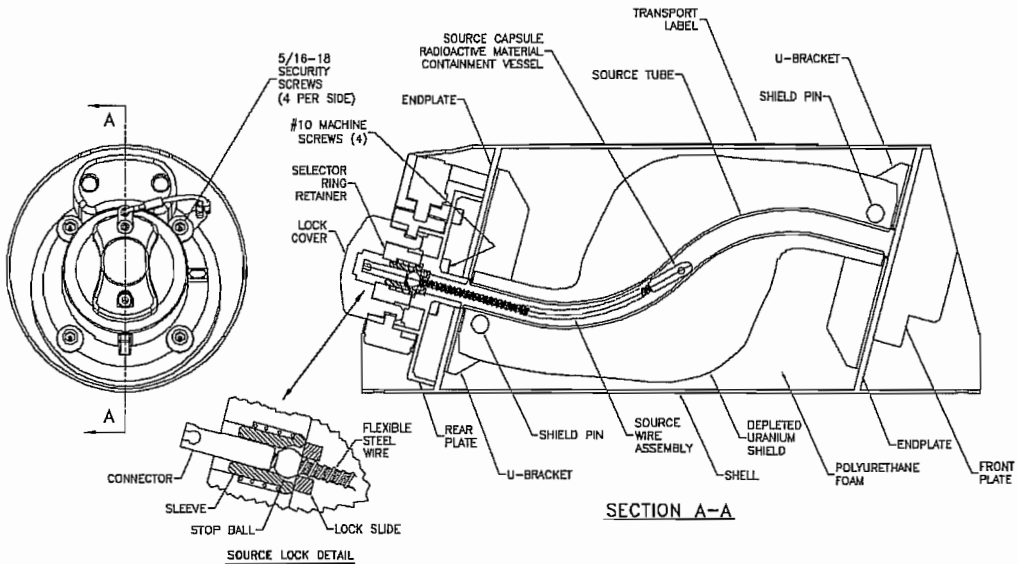

FIGURE 1. MODEL 880 PROJECTOR TRANSPORT PACKAGE.

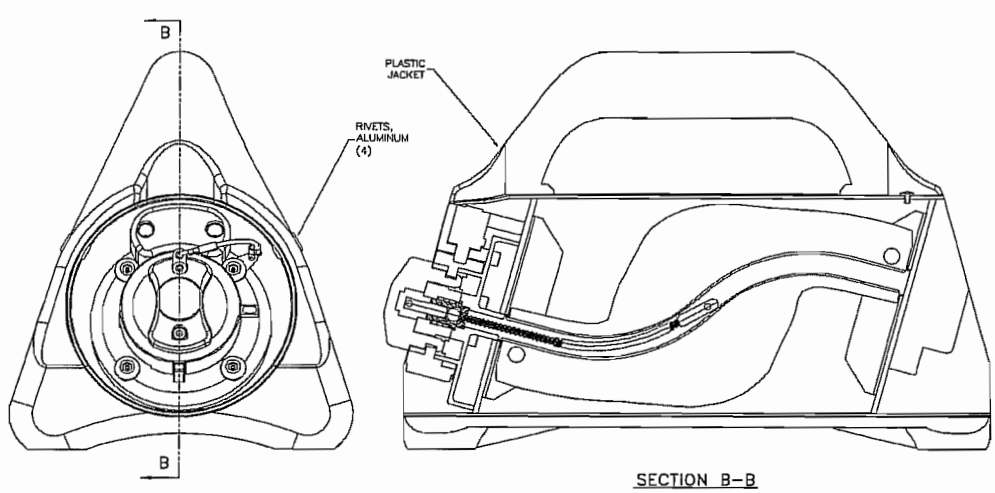

FIGURE 2. MODEL 880 PROJECTOR WITH JACKET.

Section 2 Construction and Acceptance of Test Specimens

A total of seven Model-880 transport package test specimens were manufactured in accordance with the AEA Technology QSA Quality Assurance Program. One of the seven, TP108(A), was not accepted due to borderline initial surface measurements taken during radiation profile inspection. The remainder of the six were constructed per drawing B88015 revision A. One of the six, TP108(G), was identified as the "With Jacket" test specimen and further assembled to meet the requirements of drawing B88000 revision A.

Since the test plan describes orientations for specifically identified test specimens and test specimen TP108(A) was not used, the drop test orientation for each specimen was shifted. TP108(B) took the place of TP108(A), TP108(C) for TP108(B), and so on.

Table 2.1. Test specimen data.

Test Specimen	Package Weight	Initial Source Location	Maximum Initial Surface Measurements	Maximum Initial 1 Meter Measurements	Test Orientation impact point
TP108(A)	Not used – Borderline initial surface measurements.				
TP108(B)	44.2 lbs.	6-47/64 in.	178 mR/hr	1.2 mR/hr	Lock cover
TP108(C)	44.3 lbs.	6-47/64 in.	178 mR/hr	0.9 mR/hr	Shell bottom
TP108(D)	44.4 lbs.	6-48/64 in.	160 mR/hr	1.1 mR/hr	Shell left side
TP108(E)	44.4 lbs.	6-46/64 in.	193 mR/hr	0.7 mR/hr	Not used
TP108(F)	44.1 lbs.	6-47/64 in.	192 mR/hr	1.0 mR/hr	Not used
TP108(G)	48.8 lbs.	6-48/64 in.	176 mR/hr	1.4 mR/hr	Lock cover

Section 3 Test Objectives and Orientations

3.1 Test objectives

The objective in each of the tests was to target specific areas of the package that could cause displacement of the source from its stored position within the depleted uranium shield and/or affect the integrity of the shield itself.

The modes of failure under the test conditions that could achieve the test objectives and lead to elevated dose rates include the following:

- Fracture or penetration of the shield and shell weldment.
- Displacement of the shield within the shell weldment and distortion or fracture of the source.
- Failure of the source lock assembly and/or rear plate security screws.

3.2 Package Drop Orientations

Test plan #108 identified three basic drop orientations to target three specific areas on the package. One test specimen was used for each orientation in the entire drop test sequence: 4-foot, 30-foot, and puncture, unless otherwise assessed.

The first orientation was an attack on the lock mechanism and its attachment screws by impacting on the lock cover in conjunction with the shell weldment. The object was to use the shell lip as leverage to drive the rear plate across the endplate and shear the rear plate security screws. Test specimen TP108(B) was used for this orientation.

The next orientation attacks the shield and its attachment to the shell weldment by impacting on the bottom surface of the shell weldment. This orientation has two objectives; (1) Fracture the shield by hitting the shield at a point where it is closest to the outer surface. (2) Break the shield attachment pin by forcing the shield through it as the shield is driven back up into the shell or pivots around the center of gravity upon impact. Test specimen TP108(C) was used for this orientation.

The last orientation is similar to the one above. It also attempts to fracture the shield by hitting it at a point in close proximity to the exterior surface. It also could cause failure at the shield and shell connection point by forcing the shield through the attachment pin as the shield or shell translates or rotates in relation to one another. Test specimen TP108(D) was used for this orientation.

The "with jacket" orientation is similar to the first orientation. The first orientation was considered the worst orientation for the package based on the damage recorded on test specimen TP108(B). The justification and description for the orientation is recorded on each of the drop test checklists for the "with jacket" test specimen. The "with jacket" test specimen was TP108(G).

Section 4 Drop Test Data

The drop tests were conducted at Valley Tree in Groveland, Mass., on July 21, 2000. All test specimens were tested as planned per Test plan #108 and hit their intended target impact points.

Table 4.1 Test data summary.

Test Specimen	Test	Weight	Actual Impact Point	Damage Observed at Test Site
TP108(B)	4-foot free drop	44.2 lbs.	Lock cover & shell lip	• Shell bottom rear lip bent.
	30-foot free drop	44.4 lbs.	Lock cover & shell lip	• One rear plate security screw broken. • Rear plate puckered. • Shell lip bent further.
	Puncture drop #1	44.4 lbs.	Lock cover	• Lock cover dented.
	Puncture drop #2	NA	Lock cover	• Lock cover dented.
TP108(C)	4-foot free drop	44.3 lbs.	Shell bottom surface	• Shell bottom flattened. • Shell rear lip bent in.
	30-foot free drop	44.4 lbs.	Shell bottom surface	• Shell bottom flattened further. • Shell rear top bent. • Front endplate bent near bottom. • Outlet port binds.
	Puncture drop	44.4 lbs.	Shell bottom surface	• None observed.
TP108(D)	4-foot free drop	44.4 lbs.	Shell left side	• Shell left side flattened.
	30-foot free drop	44.3 lbs.	Shell left side	• Shell left side flattened further.
	Puncture drop	44.3 lbs.	Shell left side	• None observed.
TP108(G) (with jacket)	4-foot free drop	48.8 lbs.	Lock cover	• Lock cover dented.
	30-foot free drop	48.8 lbs.	Lock cover & shell side lip	• Shell rear side lip bent. • Lock mount dented. • Two jacket rivets broken. • Label rivets missing.
	Puncture drop	48.8 lbs.	Lock cover	• None observed.

Section 5 Test Inspection Results

The tables below summarize the inspection results after the drop test sequence. A physical thermal test was not conducted, but instead evaluated by analysis. Since the condition of the test specimens does not change, a final test inspection is not needed.

Table 5.1. Damage Measurements.

Test Specimen	Damage
TP108(B)	• Shell at rear end is bent in toward lock by about 1 inch at bottom. • Shell at front end has two spot dimples about 3/16 inch deep. • Rear plate is puckered in at selector ring about 1/16 inch. • Rear plate security screw at top right is broken. • Rear plate security screw at top left & bottom right is bent. • Rear plate security screw at bottom left slightly is bent. • Lock cover is dented 3/16 inch at three spots.
TP108(C)	• Shell bottom is depressed about 3/16 inch. • Shell top has two spot dimples about 3/16 deep. • Front plate knob pin is bent about 3/16 inch.
TP108(D)	• Shell left side is depressed about 1/8 to 1 inch. • Shell right side at rear end is bent about 3/16 inch.
TP108(G)	• Shell left side at rear end is bent about 5/8 inch. • Shell left side at front end is bent about 3/16 inch. • Rear plate security screw at top right is slightly bent. • Jacket rivets on left side are broken. • Lock cover is dented about 3/16 inch. • Lock cover pin at bottom is loose and can be removed. • Label rivets missing.

Table 5.2. Radiograph Inspection.

Test Specimen	Damage
TP108(B)	• Rear plate tube feature is slightly bent but intact. • Three rear plate security screws are slightly bent but intact. • One rear plate security screw broken end remained in the rivnut.
TP108(C)	• Shield contacts the shell at the impact surface.
TP108(D)	• U-shaped bracket is bent on the left side about 1/8 inch.
TP108(G)	• No apparent internal damage.

Table 5.3. Source Location Measurements.

Test Specimen	Before Test Measurement	After Test Measurement	Difference
TP108(B)	6-47/64 in.	6-45/64 in.	1/32 in.
TP108(C)	6-47/64 in.	6-47/64 in.	0 in.
TP108(D)	6-48/64 in.	6-48/64 in.	0 in.
TP108(G)	6-48/64 in.	6-46/64 in.	1/32 in.

Table 5.4. Simulated Source Condition Assessment.

Test Specimen	Condition
TP108(B)	No indication of damage
TP108(C)	No indication of damage
TP108(D)	No indication of damage
TP108(G)	No indication of damage

Table 5.5. Maximum Radiation Measurements at Surface.

Test Specimen	Before Test Measurement	After Test Measurement	% Change
TP108(B)	178 mR/hr	180 mR/hr	1.1
TP108(C)	178 mR/hr	180 mR/hr	1.1
TP108(D)	160 mR/hr	150 mR/hr	-6.3
TP108(G)	176 mR/hr	150 mR/hr	-14.8

Table 5.6. Maximum Radiation Measurements at One Meter from Surface.

Test Specimen	Before Test Measurement	After Test Measurement	% Change
TP108(B)	1.2 mR/hr	1.1 mR/hr	-8.3
TP108(C)	0.9 mR/hr	0.8 mR/hr	-11.1
TP108(D)	1.1 mR/hr	0.8 mR/hr	-27.3
TP108(G)	1.4 mR/hr	0.9 mR/hr	-35.7

Section 6 Drop Test Results

The damage measurements and radiograph inspections, tables 5.1 and 5.2, respectively show no fracture or penetration of the shield or shell weldment, displacement of the shield within the projector or distortion or fracture of the source.

Table 5.1 does reveal one broken and three bent rear plate security screws on test specimen TP108(B). However, the rear plate and lock assembly with source remained firmly attached to the shell weldment and in the shielded position. The bent screws held even after a repeated puncture drop on the same impact point and in the same direction as the 4-foot & 30-foot drops. The "with jacket" specimen, TP108(G), was dropped in a similar orientation as specimen TP108(B), except an adjustment was made to miss hitting the jacket at the bottom rear edge. The damage indicates similar results, although less in magnitude. The rear plate security screws are bent but none are broken on TP108(G).

Radiograph examination of the specimens, from table 5.2, indicates no damage to the shield or its attachment structure. Test specimen TP108(D) showed some minor bending of the U-shaped bracket in the direction in which it was dropped. The shield remains securely fastened to the welded shell for all test specimens.

The source location, see table 5.3, for each of the two specimens, TP108(B) & TP108(G), indicates similar displacement of the source about 1/32 inch towards the front end. This appears to be the result of the lock cover being forced into the rear plate upon impact. The maximum radiation measurements given in tables 5.5 and 5.6 show this displacement does not affect radiation levels at the surface or at one meter from the surface of the package.

Test specimen TP108(G) was measured for radiation levels without the jacket before the tests and with the jacket after the test. This would explain the lower readings and high percent change for this specimen.

The radiation levels at the surface and at one meter did not change significantly; in fact, they changed very little, if at all. The average 1 mR/hr maximum "after test" reading is well below the one R/hr limit for all specimens.

Table 5.4 shows that there was no affect on the simulated source condition for any of the specimen after the test.

Section 7 Thermal Analysis

Review of the damage to all test specimens after the drop tests suggest the fire test would have no affect on the radiation measurements taken after the drop tests. The reasons for this can be justified based on the condition of the test specimen after the drop tests and the properties of the materials used to secure and shield the source within the specimen.

Condition of Test Specimens

- The internal support structure for the shield is intact and fully functional. The internal support structure consists of the shield, shell weldment, shield pins, U-shaped brackets, and endplates with rivnuts.

- There are no holes or tears in the shell weldment to allow air to circulate through the package.

- The source assembly is intact, undamaged and secure in the shielded position. The source assembly consists of the source capsule, flexible wire, stop ball and source connector.

- The rear plate assembly continues to securely attach the source assembly to the package in the shielded position. The securing components of the rear plate assembly consists of the rear plate, lock slide, sleeve, selector ring, selector ring retainer, four #10 machine screws, and four 5/16-18 security screws.

Material Properties at Elevated Temperatures

- The melting temperature for all materials of the internal support structure, rear plate assembly and source assembly is above the thermal test temperature of 800°C.

- The thermal expansion for all materials of the internal support structure is less than the design clearance allowed for assembly.

- The stainless steel and titanium components of the internal support structure, rear plate assembly and source assembly have about 30% and 60% of their room temperature strength at 800°C, respectively.

  The load condition for the thermal test is for the internal structure to support the static weight of the shield in suspension. The dynamic impact nature of the drop tests can subject the structure to a force over 100 times the static weight of the shield. This means the strength of the materials used in the structure would need to decrease by two orders of magnitude or to about 1% of their strength at room temperature. The 30-minute thermal test is not long enough for significant creep deformation to occur in the structure.

Section 8 Conclusion

The test specimens were tested in accordance with test plan #108 and therefore as required in 10 CFR Part 71 and IAEA Safety Series No. 6 for type B(U)-85 transport packages.

The Model-880 transport package satisfies the test requirements of test plan #108. The Model-880 with jacket does not adversely affect the results of these tests. This conclusion is drawn from the drop test results and thermal analysis as supported by the test data, test inspection data and damage assessments.

APPENDIX D

TEST PHOTOGRAPHS

Test Specimen (B)

Figure 1: Four Foot Drop of Specimen (B)

Figure 2: Thirty Foot Drop of Specimen (B)

Figure 3: Puncture Test of Specimen (B)

Test Specimen (C)

Figure 1: Four Foot Drop of Specimen (C)

Figure 2: Thirty Foot Drop of Specimen (C)

Figure 3: Puncture Test of Specimen (C)

Test Specimen (D)

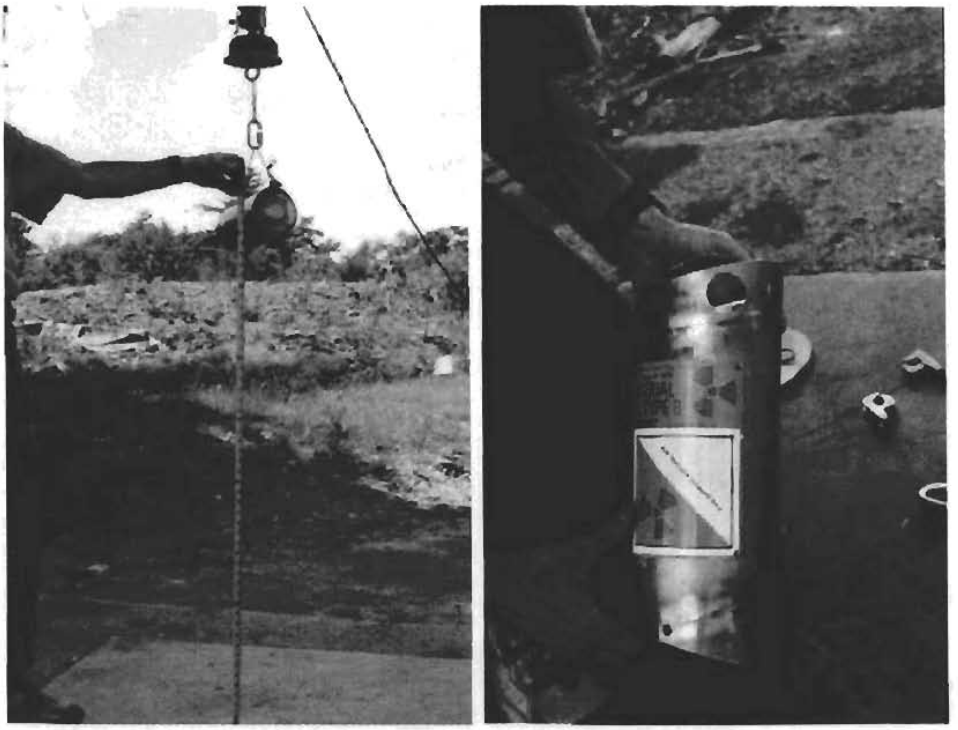

Figure 1: Four Foot Drop of Specimen (D)

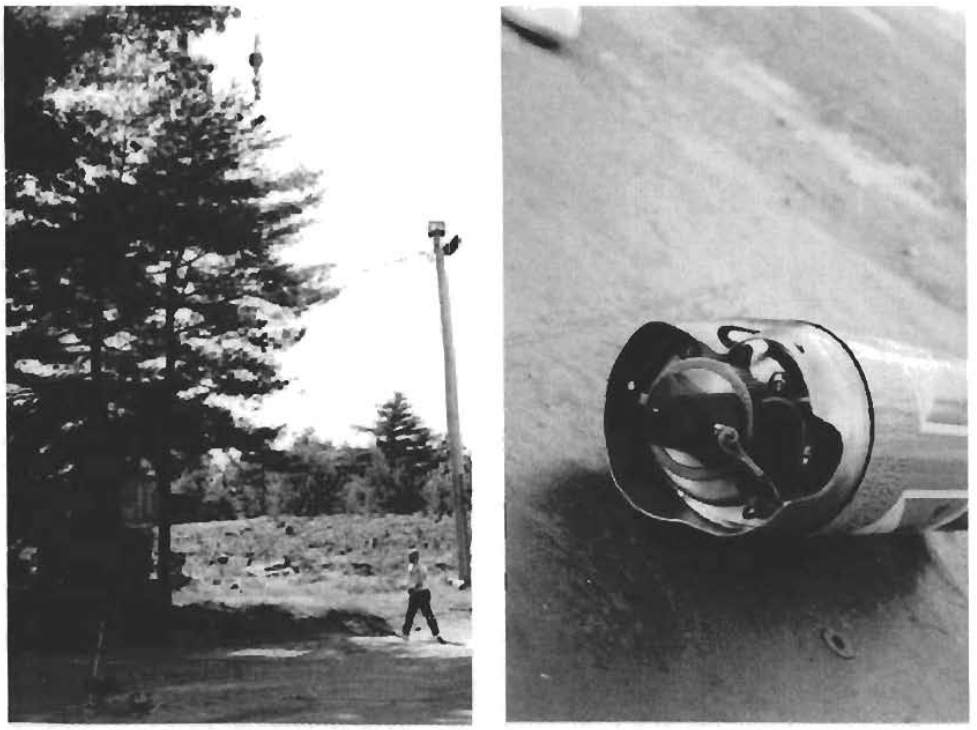

Figure 2: Thirty Foot Drop of Specimen (D)

Figure 3: Puncture Test of Specimen (D)

Test Specimen (G)

Figure 1: Four Foot Drop of Specimen (G)

Figure 2: Thirty Foot Drop of Specimen (G)

Figure 3: Puncture Test of Specimen (G)

2.12.4 Test Plan 115 (Feb 2001)

TEST PLAN 115

MODEL 880
RADIOGRAPHY PROJECTOR

ISO 3999-1:2000(E)
PERFORMANCE TESTS

Table of Contents

SECTION 1 INTRODUCTION 3

SECTION 2 GAMMA RADIOGRAPHY PROJECTOR DESCRIPTION 5

SECTION 3 DISCUSSION ON SYSTEM FAILURE MODES OF INTEREST 7

SECTION 4 CONSTRUCTION AND CONDITION OF TEST SPECIMENS 10

SECTION 5 MATERIAL AND EQUIPMENT LIST 11

SECTION 6 TEST PROCEDURES 12

SECTION 7 TESTING SAFETY AND WASTE DISPOSAL 13

SECTION 8 INITIAL PROJECTION TEST 14

SECTION 9 INITIAL TENSILE TEST FOR SOURCE ASSEMBLIES 15

SECTION 10 ENDURANCE TEST 16

SECTION 11 HORIZONTAL SHOCK TEST 17

SECTION 12 VERTICAL SHOCK TEST 19

SECTION 13 TENSILE TEST FOR GUIDE TUBES 20

SECTION 14 TENSILE TEST FOR CONTROL CABLE ASSEMBLY 21

SECTION 15 KINKING TEST FOR GUIDE TUBE 22

SECTION 16 KINKING TEST FOR DRIVE CABLE ASSEMBLY 23

SECTION 17 CRUSHING AND BENDING TEST 24

SECTION 18 FINAL TENSILE TEST FOR SOURCE ASSEMBLIES 25

SECTION 19 FINAL PROJECTION TEST 26

SECTION 20 LOCK BREAKING TEST 27

SECTION 21 WRENCH TEST 28

SECTION 22 FINAL TEST ASSESSMENT 29

SECTION 23 TEST WORKSHEETS 30

SECTION 25 APPENDIX: ISO 3999-1:2000 49

Test Plan No. 115

Section 1 Introduction

This test plan is intended to qualify the Model 880 Radiographic Projector to the performance requirements of ISO 3999-1:2000(E), "Radiographic protection – Apparatus for industrial gamma radiography – Part 1: Specifications for performance, design, and tests".

The ISO 3999-1:2000(E) tests covered under this plan are the following with their respective ISO 3999-1:2000(E) sections listed in parenthesis:

- Projection Test (6.2)
- Tensile Test for Source Assemblies (6.5)
- Shield Efficiency Test (6.4.1)
- Endurance Test (6.2)
- Horizontal Shock Test (6.4.6.1)
- Vertical Shock Test (6.4.6.2)
- Tensile Test for Guide Tubes (6.7.4)
- Tensile Test for Drive Cable Assembly (6.6.3)
- Kinking Test for Guide Tubes (6.7.3)
- Kinking Test for Drive Cable Assembly (6.6.2)
- Crushing and Bending Tests (6.6.1 & 6.7.2)
- Lock Breaking Test (6.4.2)
- Wrench Test (6.4.3)

This plan outlines the test procedure, describes the test specimen construction, identifies the test equipment, and provides worksheets for test data recording.

The vibration resistance test was evaluated and deemed unnecessary. The only parts that could come loose from vibration are the tamper-proof screws. However, tamper-proof screws have been used on similar devices over the past 25 years and field use of the screws has shown that the screws have never loosened as a result of vibration.

The accidental drop test was previously accomplished under Test Plan 104 in which the device was dropped from a height of 30 feet. After this drop, the dummy source remained secured in its fully shielded position within the source tube, attached to the source wire and was undamaged.

The design of the Model 880 Radiography Projector ensures that the device will operate continually under normal conditions. The Model 880 was designed ruggedly with non-corrosive materials, such as stainless steel, to prevent any harmful rusting or corrosion.

Only the Model 880-150 Ci device will be used to demonstrate compliance with ISO 3999-1:2000(E) performance tests. The Model 880-50 Ci device, by default, will perform the same or better than the Model 880-150 Ci device due to its lower weight and identical structural construction.

The test sequence to be used for the testing is listed in Section 6.

Section 2 Gamma Radiography Projector Description

The Model 880 projector, shown in Figure 2.1, is a portable (Class P), externally projecting source (Category II) device. The device consists of four major assemblies; the body assembly, the rear plate assembly, the front plate assembly, and the jacket assembly. A source assembly is also used and stored with the device.

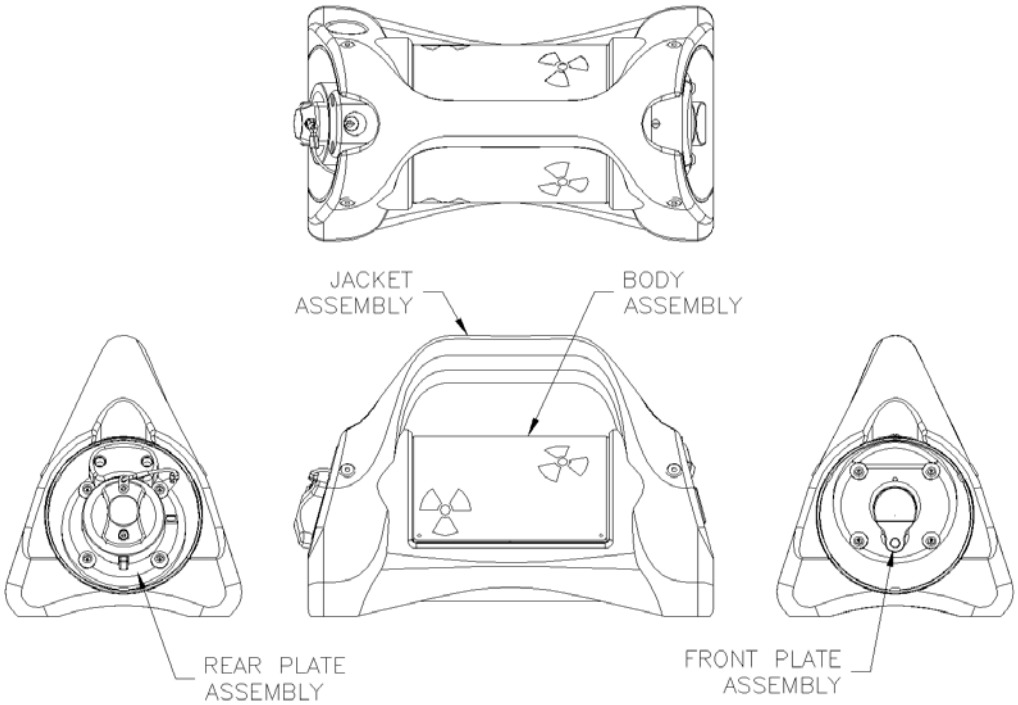

FIGURE 2.1: MODEL 880 PROJECTOR.

Section 3 Discussion on System Failure Modes of Interest

The tests in this test plan subject the test specimen to conditions likely to occur during use. The exposure device and integral safety features shall remain operational after the test and shall experience no loss of shielding efficiency.

A projection test is to be performed to determine the resistance to projection before and after the sequence of operational tests. The maximum force applied to the control handle must not increase by 25% after performing the operational tests. The projection test will be performed before and after the entire sequence of tests instead of each single test. Conducting the test in this manner will give a more conservative test result rather than smaller incremental increases in force from each single test. The test will be set up per Figure 6 in the ISO 3999-1:2000 standards. However, because of limited space, the cable paths used will have added difficulty and will actually be a more tortuous path than the one shown in the figure. The adjustment of this setup will only make the test more difficult and so will not make the test easier to pass. The operational tests include the endurance test, the shielding efficiency test, the horizontal and vertical shock tests, the tensile tests, the kinking tests, and the crushing and bending tests. A failure of the projection test would show an increase of over 125% of the force required to move the source assembly before the test to the force required after the test. A failure would indicate that a part of the exposure device, drive cable, drive cable housing, guide tube, or source assembly was damaged and is restricting movement of the source assembly or drive cable. This could result in an active source getting hung up in an unsecured location.

The source assembly tensile test is also to be performed before and after the sequence of operational tests. The purpose of the test is to ensure that the operational tests do not have any negative effects on the source wire assembly. The same dummy source assembly will be used with all of the operational tests requiring a source assembly except for the shielding efficiency test which requires an active source assembly. If there is enough wear on the swaged features of the assembly, the connections could fail when pulled.

The shielding efficiency test measures the performance of the shield when loaded with a maximum rated activity of 150 curies of Iridium-192. The shield efficiency test was completed on the test device after manufacture on November 10, 2000 and will not be completed again for this test. The results from this test will be included in the final test report at the conclusion of the tests in this test plan. The completion of the shielding efficiency test before the initial projection test and initial tensile test for source assemblies as shown in the test procedure in Section 6 of this test plan will not effect the testing in a negative manner. Performance of the shielding efficiency test does not have any effect on restricting the movement of a source assembly that is measured in the projection test. Also, the dummy source that is to be tested in the tensile test for source assemblies is not the same source assembly that would be used with the shield efficiency test because the shield efficiency test requires an active source. The source used with this test may not be the maximum rated source (150 Ci of Ir-192) that the device can handle but a correction factor will be used to determine the actual maximum dose rates if this is the case. The possible failure mode for this test would be high radiation levels over the

exposure limits for a class P exposure device. Radiation levels over the limits may be the result of a number of factors. The following are possible factors:

1. Wrong source position within the shield tube.
2. Poor shield design or translation of the design to the manufacturing process.
3. Changes in distance of the container's exterior surface relative to the source position.

The endurance test demonstrates that the radiographic system will remain operational after 50,000 cycles. This test will use the same setup as the Projection Test. A failure could cause the source tube to wear resulting in depleted uranium contamination. Also, wear on the front and rear plate mechanisms may prevent the source wire assembly from becoming completely secure in the fully shielded position.

The horizontal shock test demonstrates the ability of the test specimen to withstand swing type impacts occurring during normal use. Three areas of the device that could cause the greatest effect on radiological safety if impacted were chosen for this. The areas include the front cover, the lock, and the rear cover test (see figures 11.1, 11.2, and 11.3). Possible failure would involve the inability to operate the front or rear plate mechanisms. Hitting the small protruding features on each end could cause deformation to the assembly mounting plates or shell endplates that may produce binding in the rotating parts of the mechanisms.

The vertical shock test demonstrates the ability of the test specimen to withstand many short drops expected during normal use. There are two normal carrying positions for this device; one with the jacket and the other without the jacket. Although the jacket would add a small amount of weight to the device, the jacket would also absorb some of the impact. This test will be performed without the jacket to prevent any impact absorption and give a more conservative test assessment. Possible failure could occur at the shield support structure, specifically at the pinned connection. If the connection were to fail, misalignment of the source tube could prevent the source wire from moving. Also, damage to the jacket could result in not being able to use the handle to carry the device.

The purpose of the tensile tests on the controls and guide tubes is to demonstrate that the they are able to withstand tensile stresses that may occur during normal use. The connections could fail if there is enough wear on the swaged features. Also, a failure could indicate that the design or manufacture of the controls or guide tubes is faulty.

The kinking tests on the control cable assembly and guide tubes are done to show that the sheaths are able to withstand the conditions they may likely encounter during use. After performing the kinking tests, the control cable assembly and guide tubes should remain operable without any loss of integrity. Also, a failure could indicate that the design or manufacture of the controls or guide tubes is faulty.

The crushing and bending tests are performed to demonstrate that the control cable assembly and guide tubes remain operational after being stepped on by the heel of a shoe. A mechanical device is used to simulate the crushing effect on the tubes from a shoe. After performing the crushing and bending test, the control cable assembly and guide tubes should remain operational without any loss to integrity.

The lock breaking test is performed to check the durability of the lock on the exposure device. A force of 400 N (90 lbs) is gradually applied to the lock and held for several

seconds before being released. The force will be applied to where the key is inserted because this is the most exposed part of the lock and could become jammed or damaged by a force. The force is applied and released in this way eleven consecutive times at each position. A failure would occur if the exposure container could be opened without unlocking the device. A failure of the lock could develop into having an active source exposed without the operator's knowledge.

The wrench test is used to demonstrate that the handle of the exposure device is able to withstand forces that may be encountered during use. A static load of 25 times the weight of the device is placed at the most fragile part of the handle. A failure would be indicated by the handle becoming unattached from the device or becoming unstable. A failure could result in not being able to use the handle to carry the device or possibly an accidental drop.

Section 4 Construction and Condition of Test Specimens

All radiography system components listed in the table below and used in this test plan are manufactured in accordance with the AEA Technology QSA, Inc. Quality Assurance Program.

The Model 880, 150-Curie assembly, part number B88000 will be the device used in all tests requiring the use of a test projection device.

A Model 424-9 dummy source assembly will be loaded into the test specimen for all tests except the shield efficiency test and accidental drop test. An active Model 424-9 source assembly, part number A42409, with at least 75% of the maximum rated capacity (minimum of 112.5 curies of Iridium-192) shall be loaded into the test specimen for the shield efficiency test.

The radiography system consisting of the components in the table below will be used for the endurance test. The same Model 424-9 dummy source assembly used in the endurance test will be used in the tensile test.

Table of Model 880 Radiography System Components

Part number	Part Name	Quantity
B88000 Rev.A	MODEL 880 150 Ci MAX ASSEMBLY	1
A42409XL Rev.A	MODEL 424-9 DUMMY SOURCE ASSEMBLY	1*
A42409 Rev.E	MODEL 424-9 SOURCE ASSEMBLY	1*
BTAN69250	PISTOL GRIP CONTROL SYSTEM, 50 FOOT	1
B48930-7 Rev.A	SOURCE GUIDE TUBE ASSEMBLY, 7 FOOT	1
B48907-7 Rev.T	SOURCE GUIDE TUBE ASSEMBLY, 7 FOOT	4
B48906-7 Rev.Q	SOURCE GUIDE TUBE ASSEMBLY, 7 FOOT	1

* Note: Either one of the Model 424-9 source assemblies, Dummy (XL) or Active may be used in the system, but not simultaneously.

Section 5 Material and Equipment List

The worksheets in section 24 identify the equipment and procedure required for the tests. Additional materials and equipment used to facilitate the tests will be listed as needed.

Section 6 Test Procedures

The testing shall follow the sequence below.

Device 1: Model 880, 150 Ci Assembly

1. Initial Projection Test
2. Initial Tensile Test for Source Assemblies
3. Shield Efficiency Test (See Section 3)
4. Endurance Test
5. Horizontal Shock Test
6. Vertical Shock Test
7. Tensile Test for Guide Tubes
8. Tensile Test for Control Cable Assembly
9. Kinking Test for Guide Tubes
10. Kinking Test for Control Cable Assembly
11. Crushing and Bending Tests for Control Cable Assembly and Guide Tubes
12. Final Tensile Test for Source Assemblies
13. Final Projection Test (See Section 3)
14. Lock Breaking Test
15. Wrench Test

Section 7 Testing Safety and Waste Disposal

Testing Safety

The shield efficiency test uses active radioactive material and the test specimen contains depleted uranium (low level radioactive material). Handling radioactive material shall be done with caution and only by qualified personnel.

The weight of the test specimen is approximately 50 pounds. Proper lifting techniques shall be used to prevent injury.

Some tests of this plan may result in heavy falling objects and flying debris. Safety glasses and a safe distance must be used.

The possibility of depleted uranium contamination could be present during and after the tests. Qualified personnel shall ensure all applicable surfaces are free of contamination.

Waste Disposal

The test specimen shall be stored in the low-level waste room until authorization by the regulatory department is given to properly dispose.

Section 8 Initial Projection Test

Requirements

The Projection Test demonstrates that the torque required at the controls to move the source assembly from the secured position to the working position and back to the secured position after certain tests remains within 125% of the torque before the tests. The minimum movement rate for projecting and retracting the source assembly shall be a constant 0.75 m/s (2.5 ft/s) of linear movement until the source stops after each cycle.

Equipment

1. The test projection device equipped with the largest diameter and greatest length dummy source assembly recommended for the device.
2. The largest recommended guide tube and controls (42 ft. guide tube and 50 ft. control cable) connected to the projection device set up in accordance with Figure 6 of the ISO 3999-1:2000 standards (see Section 3).
3. Motor and Controller with torque readout.
4. Cycle counter.
5. Pneumatic actuator for lock slide actuation.

Section 9 Initial Tensile Test for Source Assemblies

Requirements

The tensile tests demonstrate that the source assembly maintains its integrity after experiencing tensile loads that may be encountered during normal use. The Tensile Test for Source Assemblies is performed before and after the sequence of operational tests. The source assembly should remain operable and maintain its integrity.

Equipment

1. Dummy source assembly. (See Section 3)
2. Force gage for measuring the forces required from Section 6.5 of the ISO 3999-1:2000 standard.

Section 10 Endurance Test

Requirements

The Endurance Test demonstrates the gamma radiography system remains operational after 50,000 cycles of the source assembly moving from secure to working positions and back. This test is done to check the resistance due to fatigue and wear of the different components and accessories of the device during normal operation. The automatic securing mechanism and the lock should remain operational and effective.

Equipment

The equipment used for this test is equivalent to the equipment used in the initial projection test (see Section 8).

Section 11 Horizontal Shock Test

Requirements

The horizontal shock test demonstrates that the exposure device will withstand the horizontal impacts the device may encounter (see Section 3).

The exposure device and integral safety features shall remain operational after the test and the device shall experience no loss of shielding efficiency.

Equipment

1. The test projection device equipped with a dummy source assembly secured and locked in its most shielded position with all covers.
2. A target consisting of a steel bar with a flat vertical face 50 mm (1.97 in.) diameter by 300 mm (11.81 in.) long. The bar shall lie horizontally and be fixed or welded to a rigid mass at least 10 times the mass of the exposure device (500 lbs).
3. Suspension equipment for the test projection device that does not cause undesirable rotation around a vertical axis when suspended before being exposed to the shock.

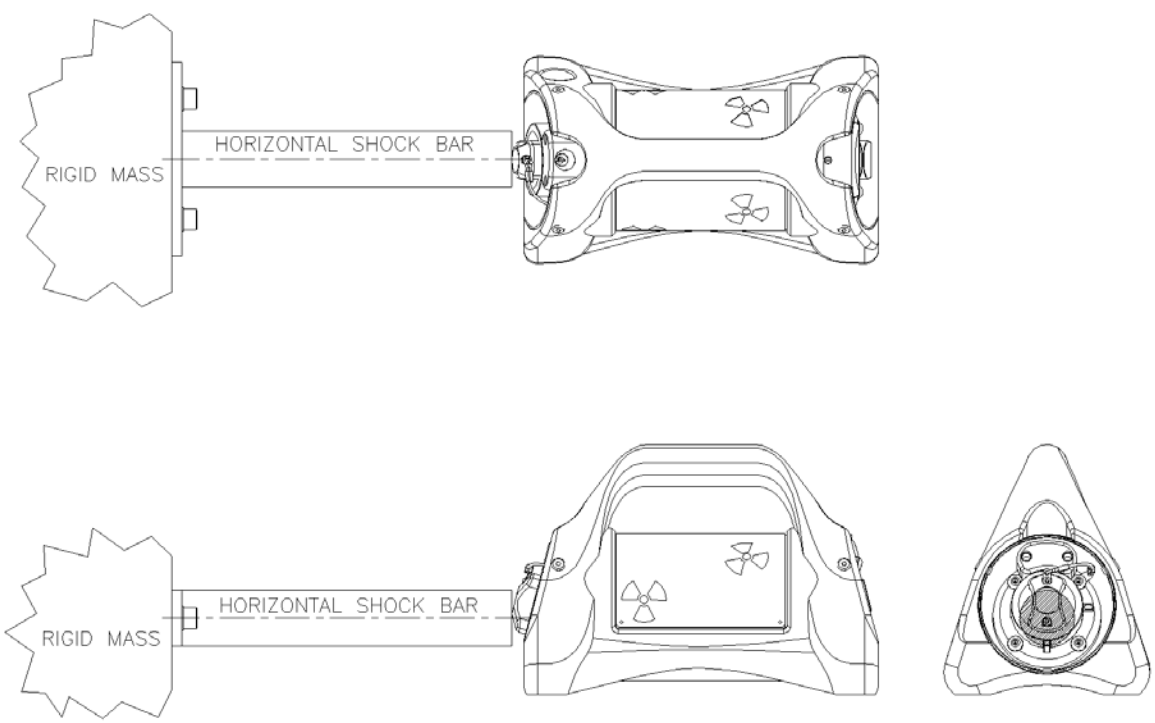

Figure 11.1 Setup for lock cover area.

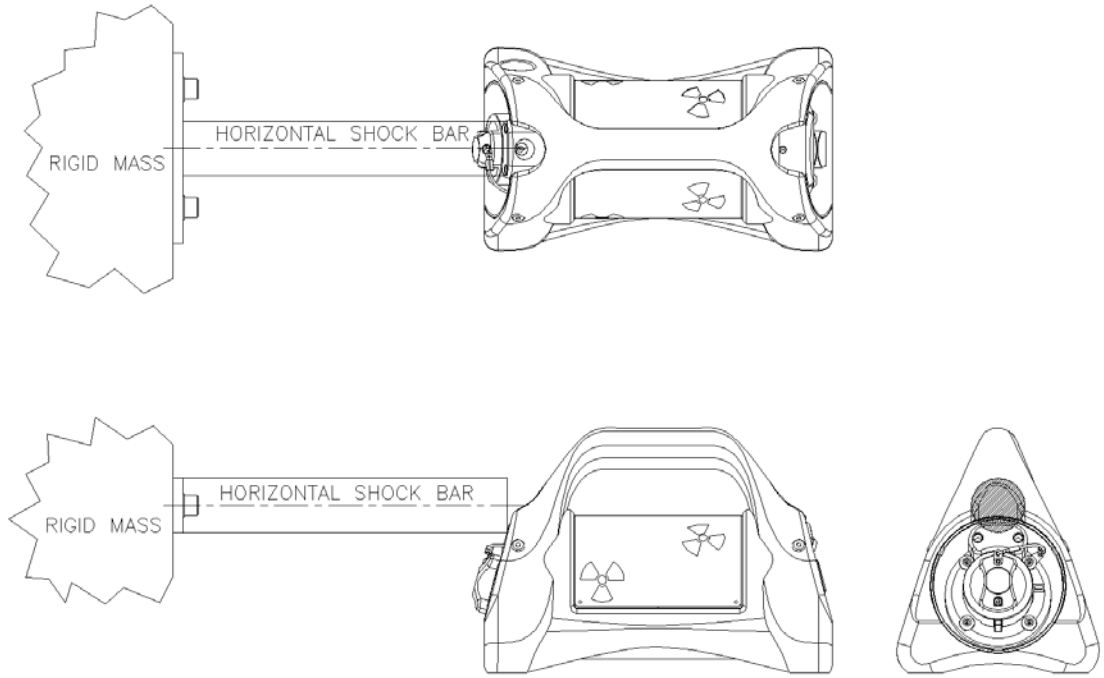

Figure 11.2 Setup for lock mount area.

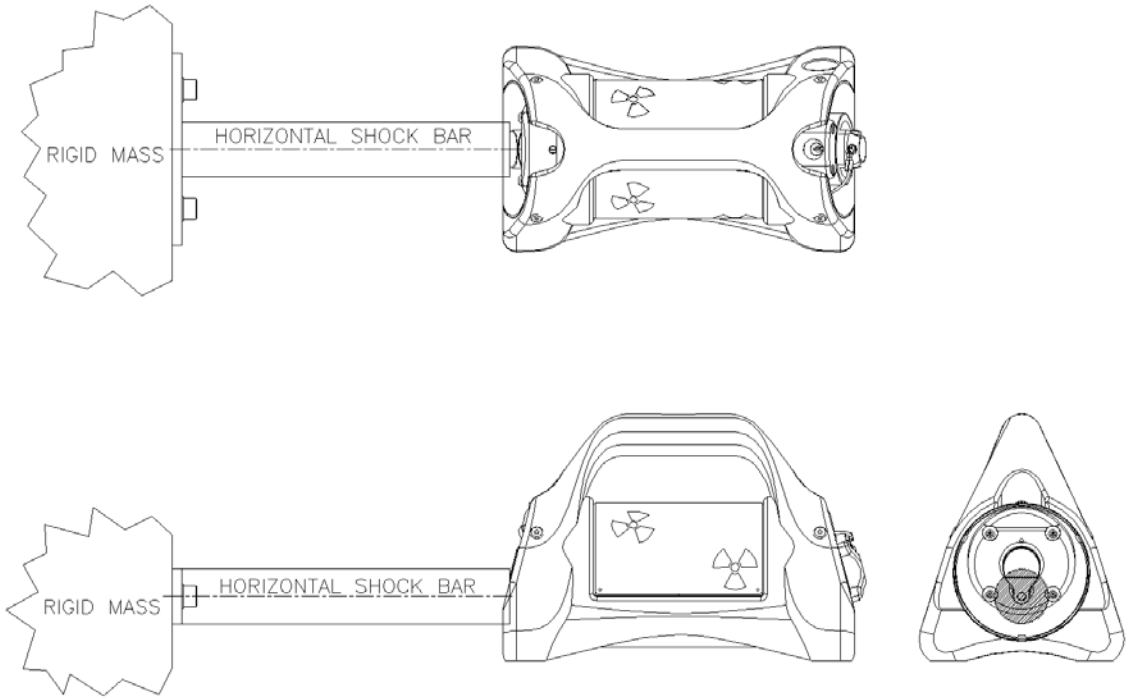

Figure 11.3 Setup for front knob area.

Section 12 Vertical Shock Test

Requirement

The vertical shock test demonstrates that the exposure device will withstand the vertical impacts the device may encounter. This test will be performed without the jacket as shown in Figure 12.1 (see Section 3).

The exposure device and integral safety features shall remain operational after the test and shall experience no loss of shielding efficiency.

Equipment

1. The test projection device equipped with a dummy source assembly secured and locked in its most shielded position with all covers but without the jacket.
2. A rigid target consisting of a flat horizontal surface of steel, concrete or solid timber having a mass at least 10 times the test specimen (500 lbs.). The surface shall be covered with a sheet of 7 or 9 ply (25mm thick) fir plywood or equivalent.

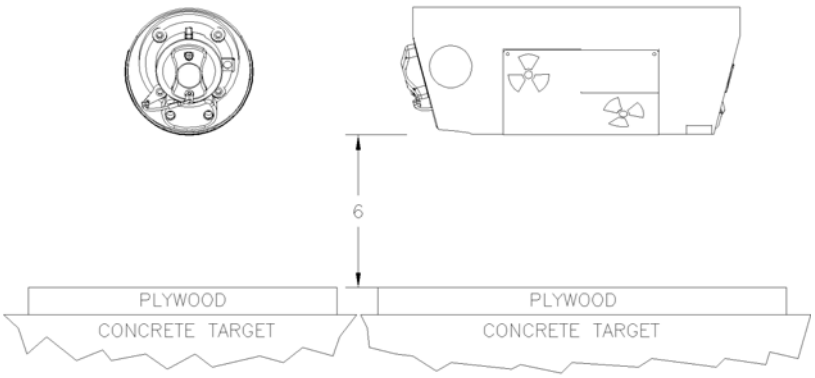

Figure 12.1

Section 13 Tensile Test for Guide Tubes

Requirements

The Tensile Tests demonstrate that the guide tube housing maintains its integrity after experiencing tensile loads that may be encountered during use as shown in Section 6.74 of the ISO 3999-1:2000 standard. The guide tube should remain completely operable without any damage that may restrict travel of the source assembly.

Equipment

1. The test projection device equipped with the dummy source assembly.
2. Test apparatus T10281 used to secure the guide tube.
3. A force or pressure gage for measuring the required loads.

Section 14 Tensile Test for Control Cable Assembly

Requirements

The Tensile Tests demonstrate that the control cable assembly maintains its integrity after experiencing tensile loads that may be encountered during use as shown in Section 6.74 of the ISO 3999-1:2000 standard. The control cable assembly will remain operational after the tests.

Equipment

1. The test projection device equipped with the dummy source assembly.
2. The test control cable assembly.
3. A force or pressure gage for measuring the required loads.

Section 15 Kinking Test for Guide Tube

Requirements

The kinking test demonstrates that the guide tube will withstand conditions that may be encountered during use as shown in Section 6.73 of the ISO 3999-1:2000 standard. The guide tube shall remain operational after the test without any damage that may restrict the travel of the source assembly.

Equipment

1. The test guide tube.
2. A flat test surface equipped with horizontal guides separated by less than or equal to 5 times the diameter of the guide tube.
3. A dynamometer.
4. A tape measure.

Section 16 Kinking Test for Drive Cable Assembly

Requirements

The kinking test demonstrates that the drive cable housing will withstand conditions that may be encountered during use as shown in Section 6.62 of the ISO 3999-1:2000 standard. The drive cable housing shall remain operational without any loss to structural integrity after the test.

Equipment

1. The test drive cable assembly.
2. A stop watch.
3. A tape measure.
4. A flat test surface.

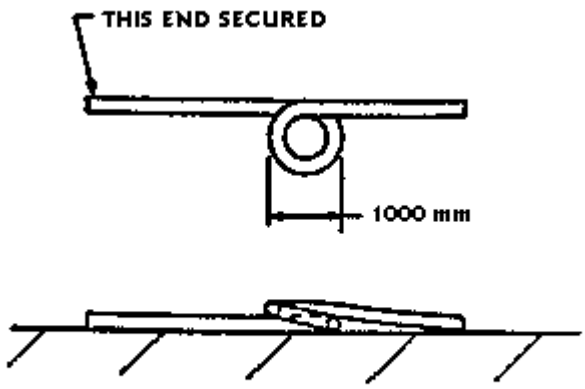

Figure 16.1

Section 17 Crushing and Bending Test

Requirements

The Crushing and Bending Test demonstrates that the drive cable and the guide tubes remain operational after being impacted by the heel of a shoe. The control cable assembly should remain operable without any loss to structural integrity.

Equipment

1. Test guide tube and control cable.
2. Test surface having a minimum mass of 150 kg (330 lb) and must be hard enough to not deform from the application of a steel punch without the presence of the drive cable housing or guide tube.
3. Steel guides to laterally hold housings with length greater than two heel lengths and a height between .5 and .75 times the sheath height for juxtaposed sheaths or single guide tube and between 1.5 and 1.75 times the sheath height for superimposed sheaths.
4. Steel punch tool T10280 as shown in figure 17.1.
5. Tape measure.

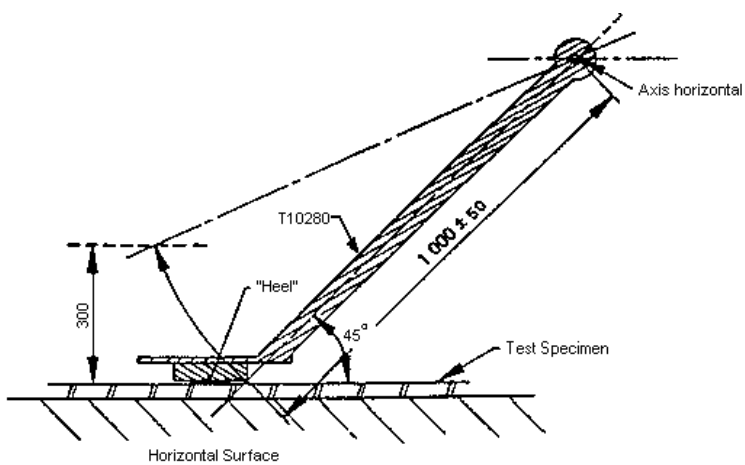

17.1 Crushing Test

Section 18 Final Tensile Test for Source Assemblies

Requirements

The tensile tests demonstrate that the source assembly maintains its integrity after experiencing tensile loads that may be encountered during normal use. The Tensile Test for Source Assemblies is performed before and after the sequence of operational tests. The source assembly should remain operable and maintain its integrity.

Equipment

1. Dummy source assembly. (See Section 3)
2. Force gage for measuring the forces required from Section 6.5 of the ISO 3999-1:2000 standard.

Section 19 Final Projection Test

Requirements

The Projection Test demonstrates that the torque required at the controls to move the source assembly from the secured position to the working position and back to the secured position after certain tests remains within 125% of the torque before the tests. The minimum movement rate for projecting and retracting the source assembly shall be a constant 0.75 m/s (2.5 ft/s) of linear movement until the source stops after each cycle.

Equipment

The equipment used for this test is equivalent to the equipment used in the initial projection test (see Section 8).

Section 20 Lock Breaking Test

Requirements

The Lock Breaking Test demonstrates that the locking mechanism can withstand a breaking force while in the locked position with the key removed. The lock must remain effective and operable after the test.

Equipment

1. The test projection device equipped with a dummy source assembly secured and locked in its most shielded position with all covers.
2. The lock breaking tool, Tool number T10345.
3. A stopwatch.
4. At least 90 lbs. of weights to be added gradually to lock breaking tool during test.

Section 21 Wrench Test

Requirements

The Wrench Test demonstrates that the exposure container handle is able to withstand a static force equal to 25 times the weight of the device (1250 lbs). The force is to be supplied to the most vulnerable part of the handle. The most vulnerable part of the handle is considered to be the middle of the handle the most bending stresses will occur.

Equipment

1. The test projection device equipped with a dummy source assembly secured and locked in its most shielded position with all covers.
2. A test plate with weights that, when strapped to the device, weighs at least 1250 lbs.
3. A scale to verify the weight of the test equipment.
4. Crane

Lift with crane (>1250 lbs.)

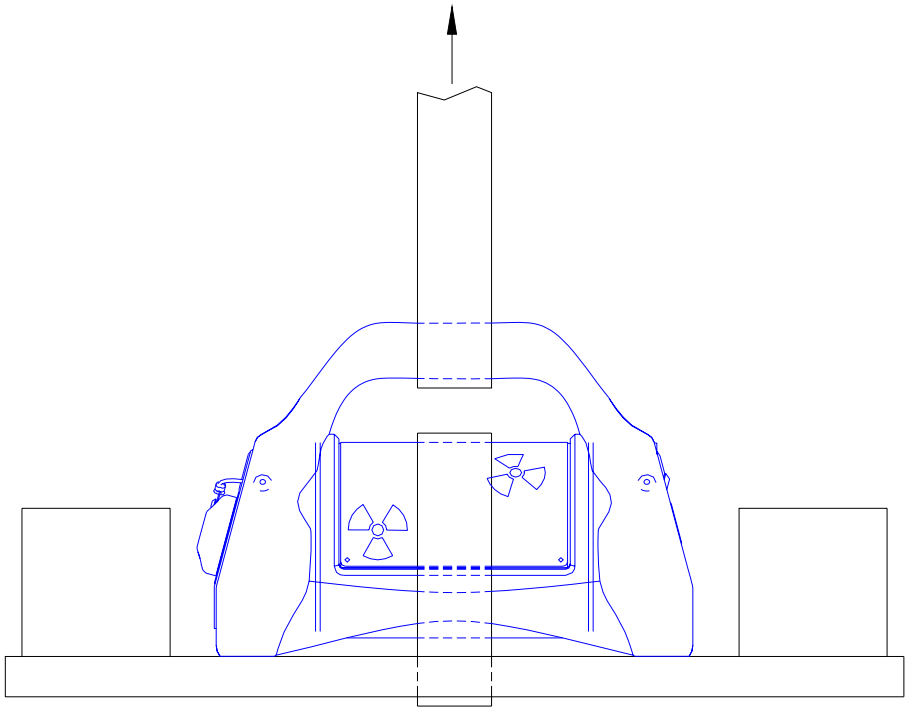

Fig. 21.1

Section 22 Final Test Assessment

After all the tests have been completed, evaluate the condition of the test specimen and assess its performance relative to the test requirements of standard ISO 3999-1:2000(E).

Section 23 Test Worksheets

Test Plan 115 Initial Projection Test

Material and Equipment:

Test device (Model 880) serial number: _____
Dummy source assembly serial number: _____
Drive control assembly and guide tubes.
Automatic cycling apparatus including motor, controller, pneumatic actuator, and counter.

Test Procedure:

1. Assemble system using Figure 6 of ISO 3999-1:2000 as a guide.
2. Assemble and connect the test specimen to the system.
3. Complete 10 full cycles.
4. Record the rotational speed (P177 rpm): _____
5. Record the highest operational torque for each cycle. 1:_____ 2:_____ 3:_____ 4:_____ 5:_____

   6:_____ 7:_____ 8:_____ 9:_____ 10:_____

6. Record the average operational torque: _____

Damage and/or operational malfunctions:

_____
_____
_____
_____

Test Assessment:

_____
_____
_____

Recorded by: _____ Date: _____

Witnessed by: _____ Date: _____

Test Plan 115 Initial Tensile Test for Source Assemblies

Material and Equipment:

Dummy source assembly serial number: _____

Force gage serial number: _____

Test Procedure:

1. Record stop ball to connector measurement: _____
2. Attach control cable to the dummy source assembly.
3. Restrain end of source assembly opposite control cable connection.
4. Gradually apply 1000 N +44/-0 (225 lb +10/-0) force over 10 seconds, hold for 5 seconds, then release.
5. Complete test a total of 10 times.
6. Unrestrain source assembly.
7. Restrain source assembly at largest diameter and repeat steps 3-5.
8. Record stop ball to connector measurement: _____.
9. Perform a complete functional operation of the device using the dummy source assembly.

Damage and/or operational malfunctions:

_____
_____
_____
_____

Test Assessment:

_____
_____
_____

Recorded by: _____ Date: _____

Witnessed by: _____ Date: _____

Test Plan 115 Endurance Test

Material and Equipment:

Test device (Model 880) serial number: _____
Dummy source assembly serial number: _____
Drive control assembly and guide tubes.
Automatic cycling apparatus including motor, controller, pneumatic actuator, and counter.

Test Procedure:

1. Prepare test specimen by securing a dummy source into its fully shielded position, attaching all covers, and locking the device.
2. Assemble system using Figure 6 of ISO 3999-1:2000.
3. Set the cycle counter to zero.
4. Cycle the test specimen a minimum of 50,000 times.
5. Record the rotational speed (>2.5 ft/s): _____
6. Record the highest operational torque: _____
7. Record the total number of cycles (>50,000): _____
8. Clean the dummy source assembly.
9. Perform a complete functional operation of the device using the dummy source assembly used in the test.

Damage, maintenance, and/or operational malfunctions:

_____
_____
_____
_____

Test Assessment:

_____
_____
_____

Recorded by: _____ Date: _____

Witnessed by: _____ Date: _____

Reviewed by:

Engineering: _____ Date: _____

Regulatory Affairs: _____ Date: _____

Quality Assurance: _____ Date: _____

Test Plan 115 Horizontal Shock Test

Material and Equipment:

Test device (Model 880) serial number: _____

Target horizontal test bar: Tool Number T10333, serial number: _____

Target mass weight: _____ Weight scale used: _____

Test Procedure:

1. Prepare test specimen by securing a dummy source into its fully shielded position, attaching all covers, and locking the device.
2. Suspend the test specimen to the test apparatus.
3. Contact the area of impact to the target per figure 11.1.
4. Swing and raise the test specimen "center of gravity" up to at least 4 inches above the target center.
5. Release the test specimen.
6. Perform steps 4 & 5 for a total of twenty (20) times.
7. Perform a complete functional operation of the device using a dummy source assembly.

Damage and/or operational malfunctions:

_____
_____
_____
_____

Test Assessment:

_____
_____
_____

Recorded by: _____ Date: _____

Witnessed by: _____ Date: _____

Test Plan 115 Horizontal Shock Test

Material and Equipment:

Test device (Model 880) serial number: _____

Target horizontal test bar: Tool Number T10333, serial number: _____

Target mass weight: _____ Weight scale used: _____

Test Procedure:

1. Prepare test specimen by securing a dummy source into its fully shielded position, attaching all covers, and locking the device.
2. Suspend the test specimen to the test apparatus.
3. Contact the area of impact to the target per figure 11.2.
4. Swing and raise the test specimen "center of gravity" up to at least 4 inches above the target center.
5. Release the test specimen.
6. Perform steps 4 & 5 for a total of twenty (20) times.
7. Perform a complete functional operation of the device using a dummy source assembly.

Damage and/or operational malfunctions:

_____
_____
_____
_____

Test Assessment:

_____
_____
_____

Recorded by: _____ Date: _____

Witnessed by: _____ Date: _____

Test Plan 115 Horizontal Shock Test

Material and Equipment:

Test device (Model 880) serial number: _____

Target horizontal test bar: Tool Number T10333, serial number: _____

Target mass weight: _____ Weight scale used: _____

Test Procedure:

1. Prepare test specimen by securing a dummy source into its fully shielded position, attaching all covers, and locking the device.
2. Suspend the test specimen to the test apparatus.
3. Contact the area of impact to the target per figure 11.3.
4. Swing and raise the test specimen "center of gravity" up to at least 4 inches above the target center.
5. Release the test specimen.
6. Perform steps 4 & 5 for a total of twenty (20) times.
7. Perform a complete functional operation of the device using a dummy source assembly.

Damage and/or operational malfunctions:

_____
_____
_____
_____

Test Assessment:

_____
_____
_____

Recorded by: _____ Date: _____

Witnessed by: _____ Date: _____

Test Plan 115 Vertical Shock Test

Material and Equipment:

Test device (Model 880) serial number: _____

Target Used: _____

Test Procedure:

1. Prepare test specimen by securing a dummy source into its fully shielded position, attaching all covers, and locking the device.
2. Suspend the test specimen at least 6 inches over the test target upside-down with the jacket removed.
3. Drop the test specimen onto target.
4. Perform steps 2 & 3 a total of one hundred (100) times.
5. Perform a complete functional operation of the device using a dummy source assembly.

Damage and/or operational malfunctions:

_____
_____
_____
_____

Test Assessment:

_____
_____
_____

Recorded by: _____ Date: _____

Witnessed by: _____ Date: _____

Test Plan 115 Tensile Test for Guide Tubes

Material and Equipment:

Test device (Model 880) serial number: _____

Test apparatus T10281.

Force gage serial number: _____

Test Procedure:

1. Prepare test specimen by securing a dummy source into its fully shielded position, attaching all covers, and locking the device.
2. Secure exposure device to prevent movement during test.
3. Attach one end of test specimen to apparatus, T10281.
4. Apply a tensile load of 500 N +44/-0 (112 lb +10/-0) for 30 seconds to the end of test specimen. The 112 lbf. tensile load will register as a minimum of 78.4 psi (84.3 psi with gauge tolerance allowance) on the pressure gauge.
5. Release the pressure.
6. Perform steps 4 & 5 a total of 10 times.

Damage and/or operational malfunctions:

_____
_____
_____
_____

Test Assessment:

_____
_____
_____

Recorded by: _____ Date: _____

Witnessed by: _____ Date: _____

Test Plan 115 Tensile Test for Control Cable Assembly

Material and Equipment:

Test device (Model 880) serial number: _____

Force gage serial number: _____

Control Cable Assembly

Test Procedure:

1. Secure test device (Model 880) so that it cannot move during test.
2. Attach the controls to the test device.
3. Apply a tensile load of 500 N +44/-0 (112 lb +10/-0) for 30 seconds to the end of test specimen. The 112 lbf. tensile load will register as a minimum of 78.4 psi (84.3 psi with gauge tolerance allowance) on the pressure gauge.
4. Release the pressure.
5. Perform steps 3 & 4 a total of 10 times.
6. Secure the controls so they will not move during test.
7. Apply a force of 1000 N +44/-0 (225 lb +10/-0) tensile force to the free end of the source assembly for 10 seconds.
8. Perform step 7 a total of 10 times.

Damage and/or operational malfunctions:

_____
_____
_____
_____

Test Assessment:

_____
_____
_____

Recorded by: _____ Date: _____

Witnessed by: _____ Date: _____

Test Plan 115 Kinking Test for Guide Tubes

Material and Equipment:

Guide Tube.

Dynamometer Ser. No. _____

Tape measure.

Test Procedure:

1. Secure test specimen without connection on a horizontal surface between two parallel plates.
2. Make a flat closed loop with guide tube.
3. Pull the free end of the loop with a force of 200 N +22/-0 (45 lb +5/-0) over 5 seconds and maintain for 10 seconds.
4. Repeat steps 2 through 4 for a total of 10 times using the same point of the guide tube.
5. Redo complete test 10 times with a connection in the loop opposite the crossing point.
6. Remove the test specimen from the clamp.
7. Verify that guide tube is operational.

Damage and/or operational malfunctions:

_____
_____
_____
_____

Test Assessment:

_____
_____
_____

Recorded by: _____ Date: _____

Witnessed by: _____ Date: _____

Test Plan 115 Kinking Test for Control Cable Assembly

Material and Equipment:

Control Cable Assembly.

Tape Measure.

Stop Watch.

Test Procedure:

1. Secure the control housing rectilinearly on a horizontal surface and clamp one end of the housing to the tabletop.
2. Make a 1000mm (39.37 in) loop with the housing on the horizontal surface (see figure 17.1). Verify the diameter of the loop using a tape measure.
3. Pull the free end of the housing without allowing it to rotate along its original axis at a minimum speed of 2.0 m/s (6.6 ft/sec).
4. Repeat test for a total of 10 times at each of 10 equidistant points along the length of the control housing.
5. Remove control housing from the clamp.
6. Verify that control assembly is operational.

Damage and/or operational malfunctions:

_____
_____
_____
_____

Test Assessment:

_____
_____
_____

Recorded by: _____ Date: _____

Witnessed by: _____ Date: _____

Test Plan 115 Crushing and Bending Test

Material and Equipment:

Steel Punch, Tool Number T10280.

Tape Measure.

Guide Tube and Control Cable Assembly.

Test Procedure:

1. Place the guide tube test specimen on a rigid horizontal test surface with a minimum mass of 150 kg between the lateral guides. The surface must be hard enough that it will not be deformed by a steel punch (heel) without the presence of the object to be tested.
2. Place the steel punch (T10280) at a point on the test specimen as shown in Figure 17.1
3. Lift the edge of the steel punch heel a minimum of 300mm (11-13/16 in).
4. Drop the steel punch onto the test specimen.
5. Perform steps 3 & 4 a total of ten (10) times on randomly selected points on the test specimen. One of these points shall be on a joint.
6. Verify that the guide tube is operational.
7. Place the control cable test specimen in the juxtaposed position on the same surface used with the guide tube and laterally support with guides 0.5 to 0.75 times the control cable housing height.
8. Repeat steps 2 through 4 on five randomly selected points on the housing making sure the punch heel hits both juxtaposed housings simultaneously.
9. Rotate the control cable test specimen on the surface to the superimposed position between lateral guides 1.5 to 1.75 times the height of a tube.
10. Repeat steps 2 through 4 on five randomly selected points making sure that the heel drops on the top tube.
11. Verify that the control cable assembly is operational.

Damage and/or operational malfunctions:

_____
_____
_____
_____

Test Assessment:

_____
_____
_____

Recorded by: _____ Date: _____

Witnessed by: _____ Date: _____

Test Plan 115 Final Tensile Test for Source Assemblies

Material and Equipment:

Dummy source assembly serial number: _____

Force gage serial number: _____

Test Procedure:

1. Record stop ball to connector measurement: _____
2. Attach control cable to the dummy source assembly.
3. Restrain end of source assembly opposite control cable connection.
4. Gradually apply 1000 N +44/-0 (225 lb +10/-0) force over 10 seconds, hold for 5 seconds, then release.
5. Complete test a total of 10 times.
6. Unrestrain source assembly.
7. Restrain source assembly at largest diameter and repeat steps 3-5.
8. Record stop ball to connector measurement: _____
9. Perform a complete functional operation check of the device using the dummy source assembly.

Damage and/or operational malfunctions:

_____
_____
_____
_____

Test Assessment:

_____
_____
_____

Recorded by: _____ Date: _____

Witnessed by: _____ Date: _____

Test Plan 115 Final Projection Test

Material and Equipment:

Test device (Model 880) serial number: _____
Dummy source assembly serial number: _____
Drive control assembly and guide tubes.
Automatic cycling apparatus including motor, controller, pneumatic actuator, and counter.

Test Procedure:

1. Assemble system using Figure 6 of ISO 3999-1:2000 as a guide.
2. Assemble and connect the test specimen to the system.
3. Complete 10 full cycles.
4. Record the rotational speed (P 177 rpm): _____
5. Record the highest operational torque for each cycle. 1:_____ 2:_____ 3:_____ 4:_____ 5:_____

   6:_____ 7:_____ 8:_____ 9:_____ 10:_____

6. Record the average operational torque: _____

Damage and/or operational malfunctions:

_____
_____
_____
_____

Test Assessment:

_____
_____
_____

Recorded by: _____ Date: _____

Witnessed by: _____ Date: _____

Test Plan 115 Lock Breaking Test

Material and Equipment:

Test device (Model 880) serial number: _____

Lock Breaking Tool, Tool Number T10345

Stopwatch.

Weights.

Test Procedure:

1. Prepare test specimen by securing a dummy source into its fully shielded position, attaching all covers, and locking the device.
2. Secure test specimen to prevent movement during test.
3. Set up Lock Breaking Tool with rod end resting on lock.
4. Gradually apply a load of 400 N +44/-0 (90 lbs +10/-0) force to lock over 10 seconds by adding weights to the top of the Lock Breaking Tool. Max Force: _____
5. Maintain the force for 5 seconds.
6. Gradually remove weights over 10 seconds.
7. Repeat test 10 times.
8. Perform a complete functional operation of the device using the dummy source assembly.

Damage and/or operational malfunctions:

_____
_____
_____
_____

Test Assessment:

_____
_____
_____

Recorded by: _____ Date: _____

Witnessed by: _____ Date: _____

Test Plan 115 Wrench Test

Material and Equipment:

Test device (Model 880) serial number: _____

Weight of test device (Model 880): _____

Total weight of test equipment: _____

Scale: _____

Test Procedure:

1. Prepare test specimen by securing a dummy source into its fully shielded position, attaching all covers, and locking the device.
2. Secure device to plate and add weight to 25 times weight of test specimen as shown in Fig. 22.1.
3. Lift test specimen and weight from middle of handle with crane.
4. Perform a complete functional operation of the device using the dummy source assembly.

Damage and/or operational malfunctions:

_____
_____
_____
_____

Test Assessment:

_____
_____
_____

Recorded by: _____ Date: _____

Witnessed by: _____ Date: _____

Section 25 Appendix: ISO 3999-1:2000

2.12.5 Test Plan Report 115 Minus Appendices (March 2001)

TEST REPORT 115

MODEL 880
RADIOGRAPHY PROJECTOR

ISO 3999-1:2000
PERFORMANCE TESTS

Table of Contents

SECTION 1 INTRODUCTION 3

SECTION 2 TEST SPECIMEN CONSTRUCTION AND ACCEPTANCE 4

SECTION 3 TEST OBJECTIVES AND RESULTS 5

SECTION 4 CONCLUSION 15

APPENDIX A - TEST DATA WORKSHEETS 16

APPENDIX B - ROUTE CARDS 17

APPENDIX C - SHIELD PROFILE INSPECTION FORMS 18

Test Report No. 115

Section 1 Introduction

This report documents the performance of the Model 880 Radiographic Projector to the test requirements of ISO 3999-1:2000, Radiological Safety for the Design and Construction of Apparatus for Gamma Radiography.

The ISO 3999-1:2000 tests were done in the following order:

- Initial Projection Test
- Initial Tensile Test for Source Assemblies
- Endurance Test
- Horizontal Shock Test
- Vertical Shock Test
- Tensile Test for Guide Tubes
- Tensile Test for Control Cable Assembly
- Kinking Test for Guide Tubes
- Kinking Test for Control Cable Assembly
- Crushing and Bending Tests
- Final Tensile Test for Source Assemblies
- Final Projection Test
- Lock Breaking Test
- Wrench Test

A test data worksheet was produced for each test detailing the material and equipment used for the test, the test procedure, a list of any damage or operational malfunctions as a result of the test, and the test assessment. Each test data worksheet is located in Appendix A. Copies of the route cards used in the production of the test device and dummy source assembly are located in Appendix B. In addition, a shield efficiency profile was completed before and after all of the above tests. Copies of the shield profile inspection forms are contained within Appendix C.

Section 2 Test Specimen Construction and Acceptance

All radiography system components listed in the table below and used in this test plan were manufactured and accepted in accordance with the AEA Technology QSA, Inc. Quality Assurance Program.

Except for the tensile test, the test specimen was the Model 880, 150-Curie projector. The projector was manufactured to drawing B88000 Rev. A and is serialized D1000.

A Model 424-9 dummy source assembly was loaded into the test specimen for all tests.

The radiography system consisting of the components in the table below was used for the endurance test. The same Model 424-9 dummy source assembly used in the endurance test was used in the tensile test for the source assembly.

Table of Model 880 Radiography System Components

Part number	Part Name	Quantity
B88000 Rev. A	MODEL 880 150 Ci MAX ASSEMBLY	1
A42409XL Rev. A	MODEL 424-9 DUMMY SOURCE ASSEMBLY	1
BTAN69250 Rev. C	PISTOL GRIP CONTROL SYSTEM, 50 FOOT	1
B48930-7 Rev. A	SOURCE GUIDE TUBE ASSEMBLY, 7 FOOT	1
B48907-7 Rev. T	SOURCE GUIDE TUBE ASSEMBLY, 7 FOOT	4
B48906-7 Rev. Q	SOURCE GUIDE TUBE ASSEMBLY, 7 FOOT	1

Section 3 Test Objectives and Results

Initial Projection Test

The initial projection test is used to determine crank torque amounts before any other testing. A final projection test is done following all of the operational tests. ISO-3999:1-2000 standards state that the torque values cannot increase by more than 25% from the initial projection test to the final projection test. The setup for the test is the same as the setup for the endurance test.

The test resulted in an average torque of 41% of full motor torque (or 51 in-lbs).

Initial Tensile Test for Source Assembly

The tensile test demonstrates the source assembly maintains its integrity after experiencing tensile loads likely to occur during use.

The tensile tests resulted in an increase in the stop ball to connector measurement from 1.227 in. to 1.249 in. Inspection of the source assembly under a microscope revealed that the source wire stretched and unraveled slightly nearest the stop ball connector explains the increased measurement. However, a complete functional test with the test Model 880 projector showed that the source assembly was still completely functional. Therefore, the source assembly passed this test.

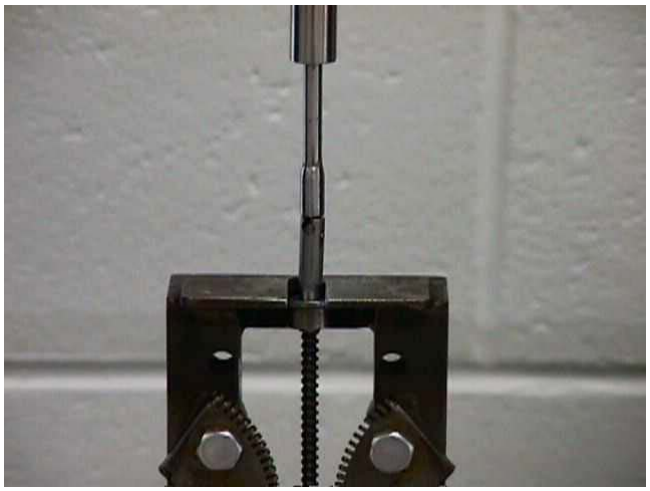

Figure 3.1 Source Assembly Tensile Test Connector and Ball Setup

Figure 3.2 Source Assembly Tensile Test Connector and Capsule Setup

Endurance Test

The endurance test demonstrates that the gamma radiation system remains operational after 50,000 cycles of the source assembly moving from secure to working position and back while using the longest recommended guide tubes and controls. The exposure device and integral safety features shall remain operational after experiencing this test.

The device was put through 51,026 cycles at a speed of 3.28 ft/s. The highest operational torque observed was 41.4 % full load torque (or 51 in-lbs). There was no visible damage and there was only negligible wear to the device, drive cable, and guide tubes. One of the crank bearings was broken but the crank still turned freely. There were no functional or operational problems resulting from this test. Therefore, the device passed this endurance test.

Figure 3.3 Endurance Test Setup

Horizontal Shock Test

The horizontal shock test demonstrates the exposure device will withstand the horizontal impacts likely to occur during use. The exposure device and integral safety features shall remain operational after the test and the device shall experience no loss to shielding integrity.

The test was performed on three areas of the device: the lock cover area (Fig. 3.4), the lock mount area, and the front knob area (Fig. 3.5). The test was initially performed by measuring the 4 inch pendulum lift from the foot of the impact side of the device. This resulted in the center of gravity being lifted 4.5 inches which is more than the 4 inch lift required by ISO 3999-1:2000. The lock cover and lock mount areas became dented after the 4.5 inch center of gravity lift. However, the two areas did not lose any functionality.

The front knob area was tested twice using the 4.5 inch center of gravity lift. The impacts resulted in the front knob tightening enough to not be able to be pulled and turned by hand. Also, the front plate buckled inward slightly which prevented the fitting entering and turning the slider.

A new front plate assembly was installed and tested by lifting the center of gravity of the device only the required 4 inches. This test resulted only in minor dents to the front knob and very slight buckling of the front plate. The knob could be pulled and turned by hand and the fitting could enter and turn the slider proving that the device passes the minimum requirements of this test.

A further test was performed on the front knob by lifting the center of gravity of the device the 4 inches and allowing it to drop on the impact cylinder at an angle. This test was done to prove that the device could withstand an angled shock to the most fragile area of the device. The test produced only minor dents on the impact side of the front knob. The knob could be pulled and turned by hand and the fitting could enter and turn the slider.

After the tests, the device was put through a complete functional test that resulted in normal operation. Therefore, the device passed the horizontal shock test.

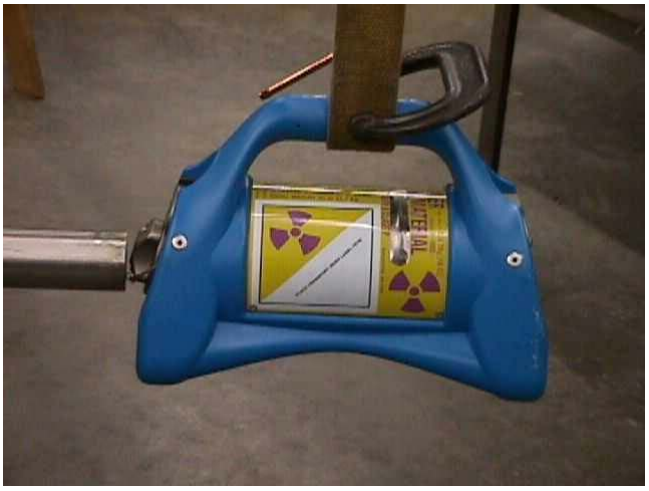

Figure 3.4 Horizontal Shock on Lock Cover

Figure 3.5 Horizontal Shock on Front Knob

Vertical Shock Test

The vertical shock test demonstrates the exposure device will withstand the vertical impacts likely to occur during use. The exposure device and integral safety features shall remain operational after the test and shall experience no loss of shielding integrity.

The test was performed on the device without the jacket in the normal carrying position. The device showed no visible damage after being dropped one hundred times from a height of 6 inches. The device functioned properly after having undergone a complete functional test. The device passed the vertical shock test.

Figure 3.6 Vertical Shock Test

Tensile Test for Guide Tubes

The tensile test for guide tubes demonstrates that the guide tube housing maintains its integrity after experiencing tensile loads that may be encountered during regular use. The guide tube should remain operable after this test.

This test resulted in no apparent damage to the guide tube. The test dummy source assembly was not restricted while being passed through the guide tube during a functional test. Therefore, the guide tubes pass this test.

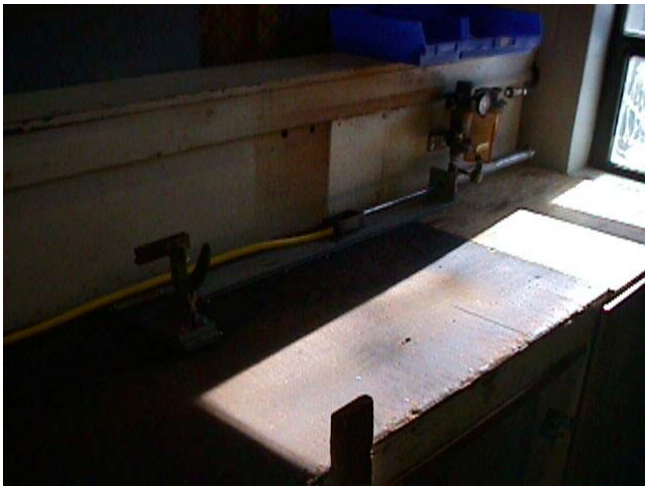

Figure 3.7 Tensile Test for Guide Tubes

Tensile Test for Control Cable Assembly

The tensile test for control cable assembly demonstrates that the control cable assembly maintains its integrity after experiencing tensile loads that may be encountered during regular use. The control cable assembly should remain operable after this test.

The test was conducted in two parts. The first part (Fig. 3.8 & 3.9) placed a tensile load on the control cable housing while connected to the device. The second part of the test (Fig. 3.10) placed a tensile load on the control cable itself while inside the control cable housing. This test resulted in no visible damage to the control cable assembly. The control cable was not restricted while being cranked through the control cable housing during a functional test. Therefore, the control cable assembly passes this test.

Figure 3.9 Tensile Test for Control Cable Housing

Figure 3.10 Tensile Test for Control Cable with Source Assembly

Kinking Test for Guide Tubes

The kinking test for the guide tube demonstrates that the guide tube withstands conditions that may be encountered during regular use. The guide tube should remain operational after experiencing this test.

The kinking test resulted in no visible damage to the guide tube. A complete functional test verified that the test dummy source assembly passed through the guide tube without any problems. Therefore, the guide tubes passed this test.

Figure 3.11 Kinking Test for Guide Tube

Kinking Test for Control Cable Assembly

The kinking test for the control cable assembly demonstrates that the control cable assembly can withstand kinking conditions that may occur during normal use. The control cable assembly should remain operational after performing this test.

After experiencing this test, the control cable assembly maintained its integrity without any apparent damage. A complete functional test was performed satisfactorily. The control cable assembly passed this kinking test.

Crushing and Bending Test

The crushing and bending demonstrates that the guide tubes and control cable assemblies can withstand a crushing test from a simulated heel (Fig. 3.12).

The control cable assembly showed some slight deformation from the impact of the simulated heel but the control cable had no problems passing through the control housings.

Three guide tubes were used in the crushing test. All of the guide tubes showed deformation from the heel impacts at each of the crushed points except for the connection point. The crushing test on the guide tube connection point resulted in no apparent damage. One of the ten crush points on each of the first two guide tubes tested resulted in enough deformation that the source assembly had trouble sliding through the area. Adding extra force to the hand crank allowed the source assembly to be forced through these tight areas. The test on the third guide tube did not require as much added force at the hand crank and the source assembly traveled through all ten crush points on the third guide tube much easier.

Although increased torque was required at the hand crank to push the source assembly through some of the crushed areas of the guide tubes, the source assembly was able to pass through all of the test samples during a functional test. Therefore, the guide tubes pass the crushing and bending test.

Figure 3.12 Crushing and Bending Test

Final Tensile Test

The final tensile test demonstrates the source assembly maintains its integrity after having undergone all of the other operational tests. The same dummy source assembly (Serial number TP115DEMO) that was used for this test is the same as used in all of the operational tests.

The tensile tests resulted in an increase in the stop ball to connector measurement from 1.240 in. to 1.250 in. A complete functional test with the test Model 880 projector showed that the source assembly was still completely functional. Therefore, the source assembly passed this test.

Final Projection Test

The final projection test demonstrates that the crank torque amount does not increase by more than 25% after the device and equipment have undergone all other operational tests. The setup that was used for this test is the same as the setup used for the initial projection test and the endurance test.

The test resulted in an average torque of 45% (or 56 in-lbs). The increase from the initial projection test was only approximately 10%. Therefore, the device passes the final projection test.

Lock Breaking Test

The lock breaking test demonstrates that the locking mechanism can withstand a breaking force while in the locked position with the key removed. The lock should remain operable after experiencing this test.

The locking mechanism had no visible damage after performance of the lock breaking test. The locking mechanism continued to be completely functional after this test. Therefore, the device passes the lock breaking test.

Figure 3.12 Lock Breaking Test

Wrench Test

The wrench test demonstrates that the handle of the exposure device is able to withstand a static force equal to at least 25 times the weight of the device (1250 lbs). This test was conducted on two different jackets with similar results. The first jacket contained metal wire wrapped around the device connected to a steel tube inside the handle for added support. The second device did not contain any added supports. Both handles lifted a load of 1288 lbs. with only slight bowing of the handle during the lift. The devices were inspected after the lift and showed no visible damage. Therefore, both handle options passed the wrench test.

Section 4 Conclusion

The Model 880 system consisting of the projector, control assembly, guide tubes and source assembly, satisfies the projection tests, the tensile tests for source assemblies, the endurance test, the horizontal shock test, the vertical shock test, the tensile and kinking tests for guide tubes and control cable assemblies, the crushing and bending tests, the lock breaking test, and the handle wrench test in accordance with ISO 3999-1:2000.

In addition to the tests performed under this test plan, ISO 3999-1:2000 also calls for a vibration resistance test and an accidental drop test.

A final shield profile was performed after the completion of all tests. There were only minor changes between the shield profile done previous to all the tests and the device remained within acceptable dose ranges. Both shield profile data sheets are located in Appendix C.

The vibration resistance test was evaluated and deemed unnecessary. The only parts that could come loose from vibration are the tamper proof screws. However, the tamper-proof screws are tightened to a prescribed torque to prevent unintentional release after repeated use or vibration. None of the tests performed resulted in a conditions that would increase chance that vibration could cause damage.

The accidental drop test was previously conducted under test plan 108 by dropping a Model 880 Projector from a height of 1.2 m (4 ft) three times to impact three different areas. There was no affect on the simulated source assembly from any of the impacts. Also, a shield profile did not show any increase in dose rate as a result of the impacts.

2.12.6 Test Plan Report 125 Rev B (Mar 2003)

TEST PLAN 125 (Rev. B) Report

MODEL 880
TYPE B CONTAINER
TRANSPORT CONDITIONS
With #88070 Foot Button Assembly
And #88022 Lock Mount Modification

AEA Technology QSA Inc.
40 North Avenue
Burlington
MA 01803

MARCH 2003

CONTENTS

SECTION 1. PURPOSE 2

SECTION 2. SCOPE OF TESTING 3

Section 2.1 Normal Conditions of Transport and Accidental Drop 3

Section 2.2 Hypothetical Accident Conditions 3

SECTION 3. TEST UNIT DESCRIPTIONS 4

Section 3.1 Test Unit #21 – Serial Number 01 4

SECTION 4. CHANGES TO TEST CONDITIONS OR ORIENTATIONS 5

Section 4.1 Normal and Accident Conditions of Transport 5

Section 4.2 Hypothetical Accident Conditions 5

SECTION 5. TEST SPECIMEN RESULTS 6

Section 5.1 Horizontal Shock Test - Foot Button Assembly 6

Section 5.2 Horizontal Shock Test - Lock Mount Assembly 8

Section 5.3 Pentration Shock Test - Foot Button Assembly 9

Section 5.4 9.m (30 ft.) Free Drop Test - Foot Button Assembly 10

SECTION 6. ANALYSIS, SUMMARY, AND CONCLUSIONS 12

SECTION 7. APPENDIX A – DRAWINGS 13

SECTION 8. APPENDIX B – CALCULATIONS 14

SECTION 9. APPENDIX C – TEST DATA SHEETS 15

SECTION 10. APPENDIX D – MANUFACTURING RECORDS 16

SECTION 11. APPENDIX E – TECHNICAL REPORTS 17

SECTION 12. APPENDIX F – ORIGINAL TEST PLAN 18

Section 1. Purpose

The purpose of these tests were to assess the Model 880 transport container with the addition of the #88070 (F.C.B.A.) foot control button assembly. With the addition of this assembly and the modification of the #88022 lock mount, they will not adversely affect the packages ability as a "Type B" transport container.

Testing was performed on the 88070 F.C.B.A. to 10CFR71 regulations for 71.73(1) *free drop*, 71.73(3) *puncture*, and 71.71(10) *penetration*. These tests followed a random order except that the 71.73(3) puncture test was to follow the 71.73(1) free drop test if the specimen survived. Also, testing was performed according to ISO 3999-1 regulations for 6.4.6.1 *horizontal shock*. This horizontal shock test was relevant for both the 88070 F.C.B.A. and the 88022 lock mount assembly.

Section 2. Scope of Testing

Section 2.1 Normal Conditions of Transport and Accidental Drop

The tests for accidental drop described in ISO 3999-1, and normal conditions of transport in 10CFR71 are the tests. These tests will include a horizontal shock test, and penetration test.

Horizontal Shock Test

The 880 unit was oriented so the (1) F.C.B.A. and the (2) Lock Mount would impact the end-face of (T10333 SN01) 50 mm (2 in) diameter steel bar. The criteria is 300 mm (12 in) in length lying horizontally, that is fixed or welded to a rigid mass at least ten times the mass of the 880. The 880 was suspended from a fixed point so that, when at rest, the F.C.B.A. and Lock Mount just touches the target. The 880 was moved from its resting position until its center of gravity is 100 mm (4 in) higher than in the resting position and let loose, so that it swung in a pendulum movement against the target. This was carried out for a total of twenty (20) times.

Penetration Test

The 880 unit was oriented so as the foot control button assembly would be facing upward while the jacket will be supported on an unyielding surface. The hemispherical end of a vertical steel cylinder (AEA Technology QSA Drawing #BT10129) of 3.2 cm (1.25 in) diameter and 6 kg (13 lbs.) mass dropped from a height of 1 m (40 in) onto the surface of the F.C.B.A.

Section 2.2 Hypothetical Accident Conditions

The Hypothetical Accident Tests described in 10CFR71 are the 9m (30-foot) drop, the 1m (~3-foot) puncture drop.

9m (30-foot) Free Drop Test

The 880 radiographic unit was oriented so that the F.C.B.A. would be facing downward toward the test pad (T10261 SN01) for the 9m (30 ft.) drop test. This exposed the assembled unit so the F.C.B.A. received an impact similar to a slap down effect. One test was performed. It is described in the following sections.

Puncture Test

According to the Purpose (Section 1.0 paragraph 4) section of the test plan, an evaluation would be made before this test was to be performed. Normally, the 880 unit would be oriented in a similar angled fashion as above for the 1m (40 in.) drop test. The unit would be dropped onto a test billet (T10119 SN01) so as the F.C.B.A. sustains the full initial impact. This test was not performed. Reasons are described in the following sections.

Section 3. Test Unit Descriptions

Section 3.1 Test Unit 1 – Serial Number 01

The construction of this package is in accordance with the following AEA TECHNOLOGY QSA INC. documentation:

Assembly	Bill of Materials	Assembly Drawing
880 Delta Simulator Drawings	88017XLS TP125A Rev 1	B88017XLS Rev A BTP125A Rev 1
Foot Button Assy	BM 88070 Rev C	A88070 Rev B
Foot Control Shaft	N/A	A88070-4 Rev 3
Rear Plate Assy	BM 88020 Rev 5	B88020 Rev 5

The unit started construction to an earlier revision and Test Plan (See Appendix C Manufacturing Support Documentation). Changes to the unit during construction were recorded as mark-ups on the production prints and subsequently transferred to the above revisions.

As indicated above, the test unit was assembled with a modified rear plate assembly that includes changes to the *lock mount assembly.* Also, the *foot control button assembly* was modified with a G-10 shaft (Rev. 3) and installed onto the jacket for the testing. The test unit weighed approximately 49 pounds.

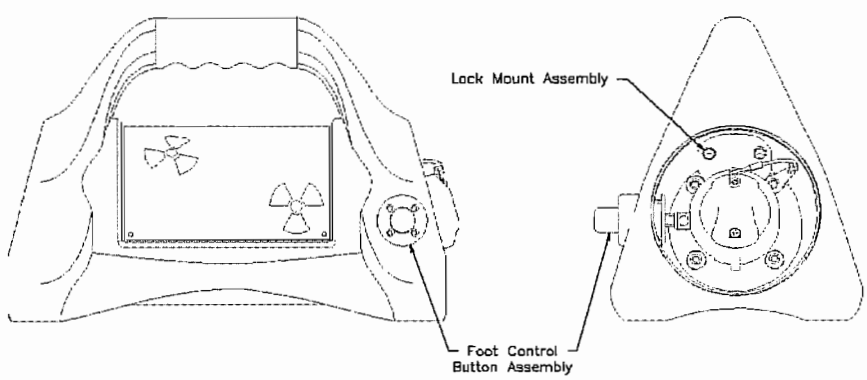

FIGURE 1. MODEL 880 (Test Unit #21) WITH FOOT BUTTON AND LOCK MOUNT ASSEMBLIES

Section 4. Changes to Test Conditions or Orientations

Section 4.1 Normal Conditions of Transport and Accidental Drop

No changes from plan were performed.

Section 4.2 Hypothetical Accident Conditions of Transport

No changes from plan were performed.

Section 5. Test Specimen Results

Section 5.1 Horizontal Shock Test – Foot Button Assembly

The test unit was set up on a portable crane type apparatus. Lead blocks were stacked around the base of the unit to keep it stationary and in position. The test unit was suspended (see figure 1) from the crane by means of its steel cable and a cloth rope around the test unit's handle. The 50mm 2 in diameter bar (T10333 SN01) was bolted to a Model 770 that weighted approx. 950 lbs.

Figure 1

The test was then performed according to ISO 3999-1 regulations for 6.4.6.1 horizontal shock (see figure 2) test.

Figure 2

The unit was swung from the apparatus for a total of 20 times. The G-10 Shaft inside the F.C.B.A. broke, this was the piece that was expected to break. (see figure 3) The selector ring was not compromised. The unit passed the test.

Figure 3

Section 5.2 Horizontal Shock Test – Lock Mount Assembly

The test unit was set up on the portable crane type apparatus as on the F.C.B.A. The same testing was performed. See figure 4.

Figure 4

The unit was swung from the apparatus for a total of 20 times. The Lock Mount Assembly sustained minimal damage. Moreover, the corbin lock actuated smoothly and effortlessly. (See figure 5) The unit passed the test.

Figure 5

Section 5.3 Penetration Shock Test – Foot Button Assembly

The test unit was set up so the F.C.B.A. was facing upward. An aluminum angle was used to guide the test bar directly to the center of the F.C.B.A. (as shown in Figure 6).

Figure 6 (rotated 90 degrees)

Upon dropping the bar, the G-10 Shaft broke. The button assembly needed to be disassembled to activate the selector ring and lock slide on the test unit. The test unit worked fine and passed the test.

Figure 7

Section 5.4 9.m (30 ft.) Free Drop Test – Foot Button Assembly

The test unit was set up so that the F.C.B.A. was facing downward according to test plan instructions. The unit was dropped to induce the most rapid and damaging deceleration, which in this case had a slap down effect. See Test Plan 125B section 8.0 for setup orientation, and below (figure 8) for more information.

Figure 8

When the test unit was dropped, the unit fell as anticipated in the test plan. The polyurethane jacket and stainless steel canister deflected inward from the impact. The F.C.B.A. dented the side of the #88021 rear plate and the G-10 shaft contained within the button assembly shattered upon impact. Unfortunately due to the severe deflection of the components, the back of the F.C.B.A. hit the lock slide forcing it through the selector ring. The unit failed the test. See figure 9 and 10 for visual results. All testing was stopped at this time. Moreover, the Puncture Test was not performed.

Figure 9

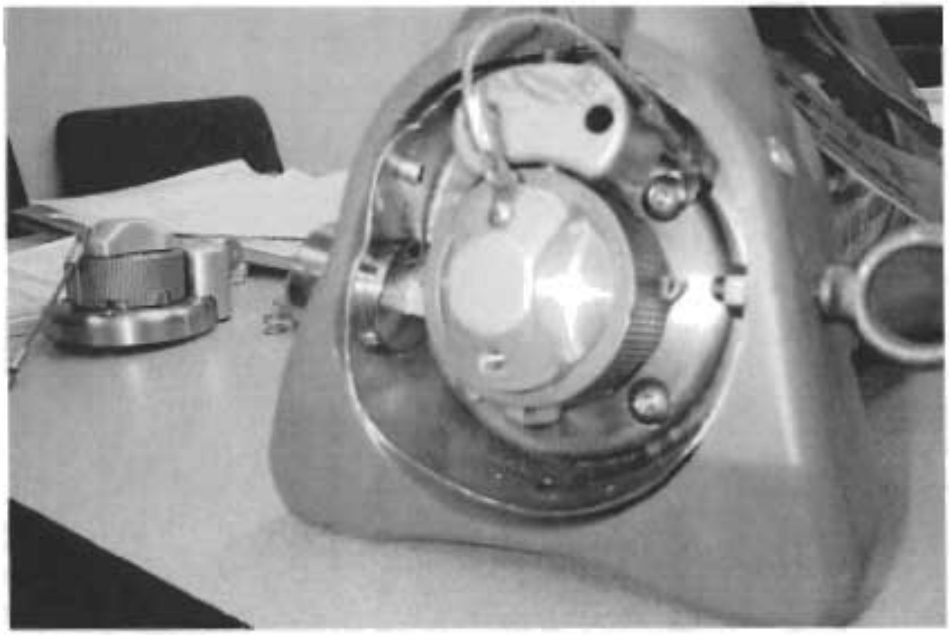

Figure 10

Section 6. Analysis, Summary, and Conclusions

Section 6.1 Analysis of testing not performed

Thermal Analysis
Because of the detailed assessment contained in TP108 a full weight "lead" dummy unit was used for this testing. Also, the melting temperature for all other materials of the internal support structure, rear plate assembly and source assembly is above the thermal test temperature of 800°C.

Moreover, the load condition for the thermal test is for the internal structure to support the static weight of the shield in suspension. The dynamic impact nature of the drop tests can subject the structure to a force over 100 times the static weight of the shield. This means the strength of the materials used in the structure would need to decrease by two orders of magnitude or to about 1% of their strength at room temperature. The 30-minute thermal test is not long enough for significant creep deformation to occur in the structure.

Puncture Test Analysis
This testing was performed on TP108. The testing passed when no damage occurred to the units. Therefore, testing was not performed on the Lock Mount Assembly. Also, the Lock Mount sits below the surface (with or without the jacket) of the radiographic camera and therefore would not be compromised. Moreover, the Lock Cover that is attached to the Rear Plate Assembly aids in the protection of the Lock Mount Assembly.

Vertical Shock Test Analysis
The vertical shock testing that was performed on TP115 for the model 880 unit showed no damage. The device functioned properly after having undergone a complete functional test. Therefore, vertical shock testing was not performed on this test unit.

Section 6.2 Summary and Conclusion

The Lock Mount Assembly with its addition of a stainless steel sleeve performed very well. The Lock Mount was also environmentally tested (see Technical Report #40) and performed superior. The design of the lock mount can be modified easily by enlarging its corbin lock retaining hole to accept the stainless sleeve. Moreover, the sleeve will be secured in place from the back with a 8-32 stainless set screw and a removable thread lock material.

The F.C.B.A. button assembly did pass the Horizontal Shock, and Penetration Test, but failed at the 9m (30ft.) Drop test. The G-10 fiberglass shaft reacted as designed, which shattered upon impact. As stated in the section 5.4, because of the severe force that was distributed through the F.C.B.A. stainless steel housing the lock slide was forced through the side of the selector ring.

From the test data, and the analysis contained within this report, we draw the following conclusions about the Model 880 (as tested):

1. The lock mount and F.C.B.A. can withstand the *Normal Conditions of Transport* and *Accidental Drop Test* situations.
2. The lock mount can withstand the *Hypothetical Conditions of Transport*.

Section 7. APPENDIX A – DRAWINGS

REVISIONS				
REV.	ECO/TGR #	DESCRIPTION	APPROVALS	DATE
A	2731	INITIAL RELEASE	SEE TITLE	BLOCK

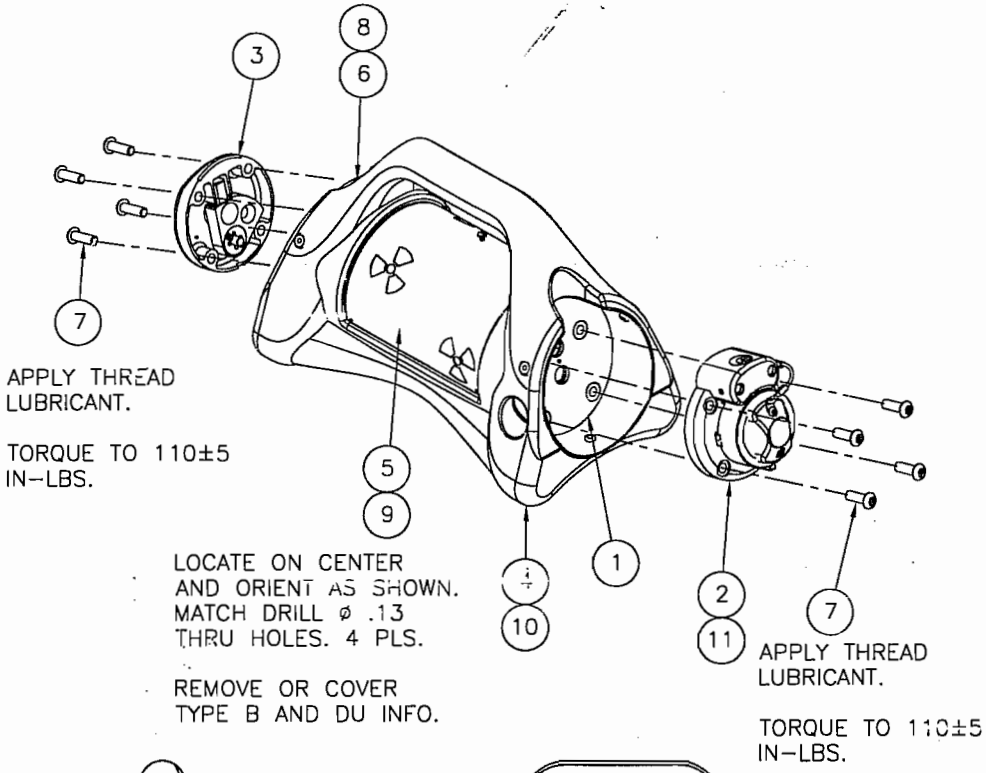

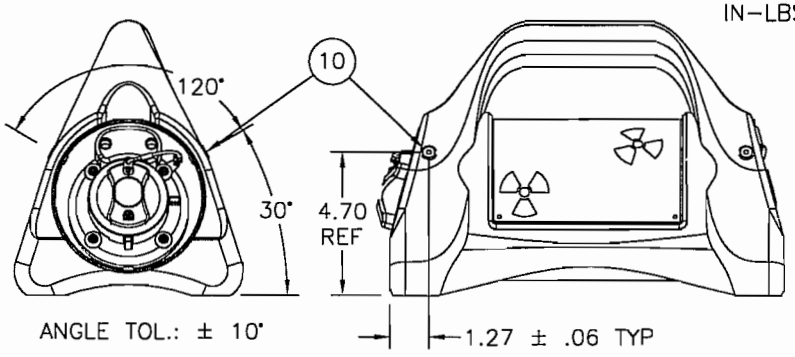

NOTES:

1. TOTAL PACKAGE WEIGHT TO BE 50 LBS. MAX.

ITEM	DRAWING NO.	QTY.	DESCRIPTION
11	A42409XL	1	DUMMY SOURCE WIRE
10	RIV093	4	RIVET
9	RIV003	4	POP RIVET
8	SCR137	1	BINDER HEAD SCREW, #6-32 X 3/16 LG.
7	SCR154	8	SECURITY SCREW, 5/16-18 X 1-1/2 LG.
6	A88043	1	SOURCE ID TAG
5	C88042-1	1	LABEL
4	B88041-1	1	JACKET
3	B88030	1	FRONT PLATE ASSEMBLY
2	B88020	1	REAR PLATE ASSEMBLY
1	B88011XLS	1	BODY WELDMENT, DELTA SIMULATOR

THIS DRAWING IS THE EXCLUSIVE PROPERTY OF AEA TECHNOLOGY QSA. IT MAY ONLY BE USED FOR THE PURPOSE FOR WHICH IT WAS ISSUED. IT MAY NOT BE DUPLICATED IN ANY WAY, NOR TRANSMITTED TO ANY THIRD PARTY WITHOUT THE EXPRESS PERMISSION OF AEA TECHNOLOGY QSA.

MATERIALS: SEE PARTS LIST

PROTECTIVE FINISH: NONE

UNLESS OTHERWISE SPECIFIED:
1. DIMENSIONS ARE IN INCHES.
2. MIN SURFACE TEXTURE: 125
3. TOLERANCES APPLY AFTER PLATING.
4. REMOVE BURRS AND SHARP EDGES.
5. DO NOT SCALE DRAWING.
6. TOLERANCES: .X ± 0.1, FRACTIONS ± 1/64, .XX ± 0.01, MACHINED ANGLES ± 1°, .XXX ± 0.005

USED ON:

DRAWN		8 Sep-00
CHECKED		11 SEP 00
APPR.		11 SEP 00

THIRD ANGLE PROJECTION

SAFETY CLASS C

AEA TECHNOLOGY QSA
40 NORTH AVE, BURLINGTON, MA 01803

TITLE: MODEL 880 DELTA SIMULATOR ASSEMBLY

SIZE	DWG. NO.	REV
B	88017XLS	A

SCALE: NONE SHEET 1 OF 1

REVISIONS				
REV.	ECO/TGR #	DESCRIPTION	APPROVALS	DATE
1		PROTOTYPE	SEE TITLE	BLOCK

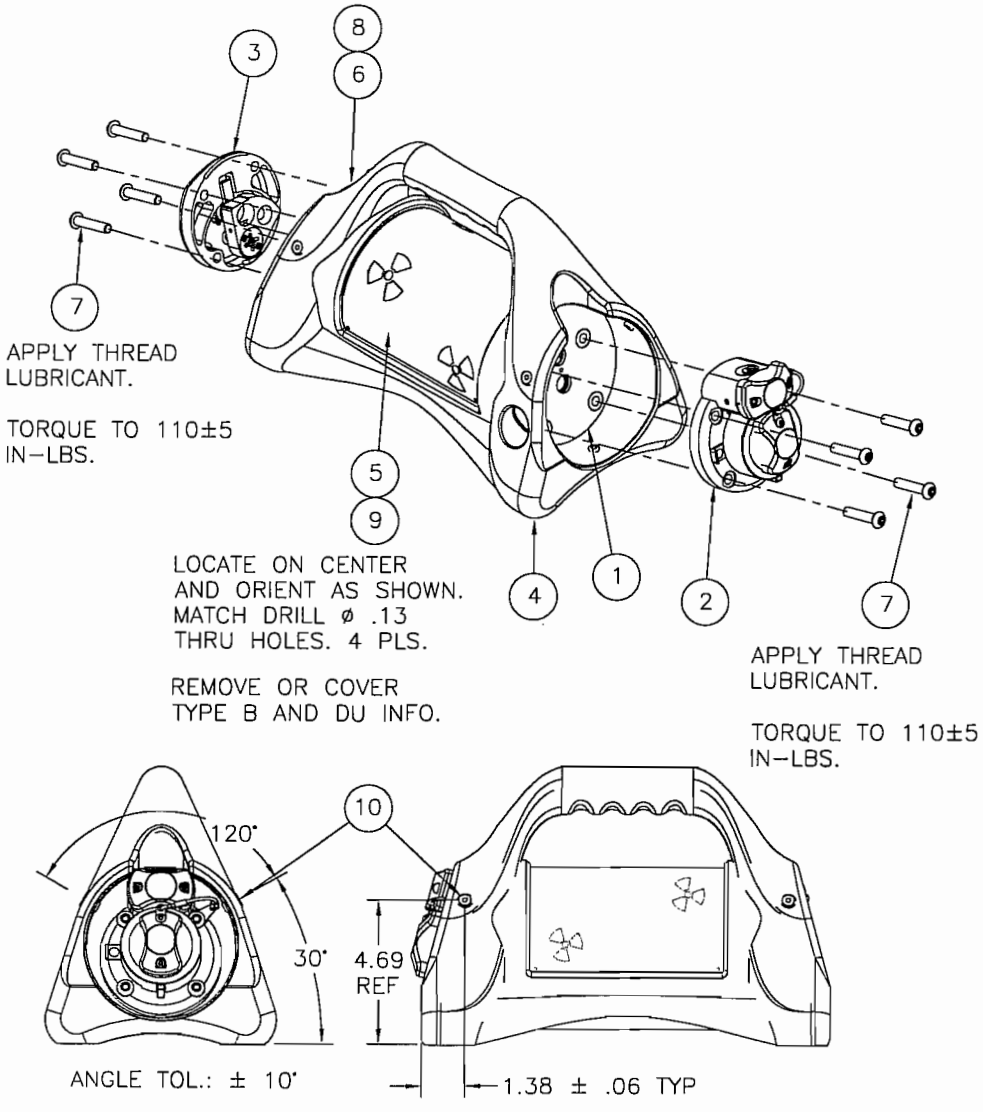

NOTES:

1. TOTAL PACKAGE WEIGHT TO BE 50 LBS. MAX.

ITEM	DRAWING NO.	QTY.	DESCRIPTION
11	A4209XL	1	DUMMY SOURCE WIRE
10	RIV093	4	RIVET
9	RIV003	4	POP RIVET
8	SCR137	1	BINDER HEAD SCREW, #6-32 X 3/8LG.
7	SCR154	8	SECURITY SCREW, 5/16-18 X 1-1/2 LG.
6	88043	1	SOURCE ID TAG
5	88042-1	1	LABEL
4	88041-1	1	JACKET
3	88030	1	FRONT PLATE ASSEMBLY
2	88020	1	REAR PLATE ASSEMBLY
1	88011XLS	1	BODY WELDMENT, DELTA SIMULATOR

THIS DRAWING IS THE EXCLUSIVE PROPERTY OF AEA TECHNOLOGY QSA. IT MAY ONLY BE USED FOR THE PURPOSE FOR WHICH IT WAS ISSUED. IT MAY NOT BE DUPLICATED IN ANY WAY, NOR TRANSMITTED TO ANY THIRD PARTY WITHOUT THE EXPRESS PERMISSION OF AEA TECHNOLOGY QSA.

MATERIALS: SEE PARTS LIST

PROTECTIVE FINISH: NONE

UNLESS OTHERWISE SPECIFIED;
1. DIMENSIONS ARE IN INCHES.
2. MIN SURFACE TEXTURE: 125
3. TOLERANCES APPLY AFTER PLATING.
4. REMOVE BURRS AND SHARP EDGES.
5. DO NOT SCALE DRAWING.
6. TOLERANCES: .X ± 0.1
FRACTIONS ± 1/64 .XX ± 0.01
MACHINED ANGLES ± 1° .XXX ± 0.005

USED ON:

DRAWN
CHECKED
APPR.

THIRD ANGLE PROJECTION

SAFETY CLASS A

AEA TECHNOLOGY QSA
40 NORTH AVE, BURLINGTON, MA 01803

TITLE: MODEL 880 DELTA SIMULATOR ASSEMBLY

SIZE B | DWG. NO. TP125A | REV 1

SCALE: NONE | SHEET 1 OF 1

REVISIONS				
REV.	ECO/TGR #	DESCRIPTION	APPROVALS	DATE
A	2731	INITIAL RELEASE	SEE TITLE	BLOCK
B	163	ADDED WELDING SYMBOL AND TOLERANCES	PAG/[illegible]	14 DEC 01 [illegible]

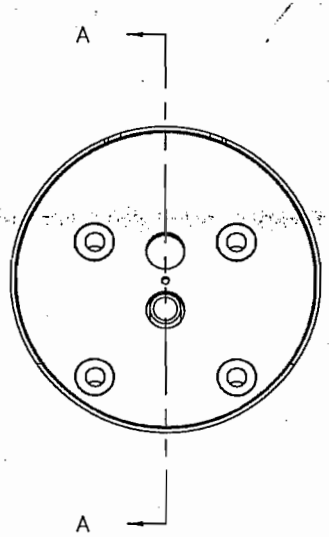

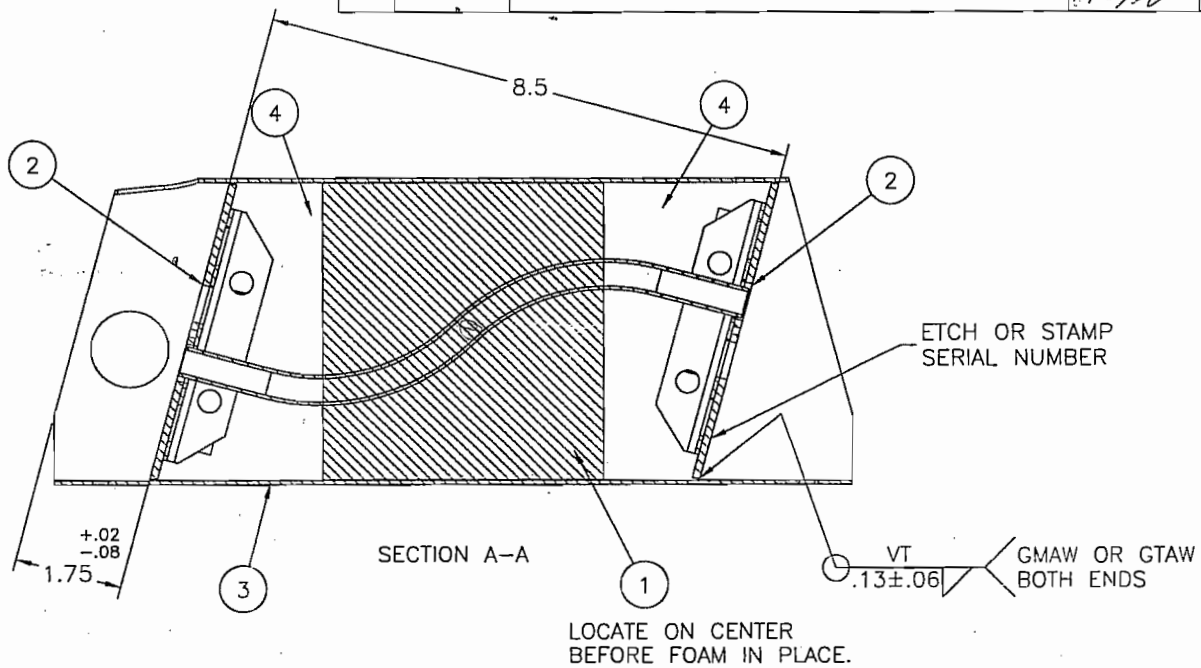

NOTES:
1. TACK WELD EACH END MINIMUM OF 3 PLACES EQUALLY SPACED AROUND DIA. OF ENDPLATE.
2. FINISH WELD AS SHOWN.
3. FILL WITH ITEM 4 AFTER FINISH WELD.

ITEM	DRAWING NO.	QTY.	DESCRIPTION
4	FOM001	AR	VULTAFOAM, 8 PCF
3	B88003	1	SHELL
2	A88010	2	ENDPLATE WELDMENT
1	A88052-1	1	DELTA SHIELD SIMULATOR

THIS DRAWING IS THE EXCLUSIVE PROPERTY OF AEA TECHNOLOGY QSA. IT MAY ONLY BE USED FOR THE PURPOSE FOR WHICH IT WAS ISSUED. IT MAY NOT BE DUPLICATED IN ANY WAY, NOR TRANSMITTED TO ANY THIRD PARTY WITHOUT THE EXPRESS PERMISSION OF AEA TECHNOLOGY QSA.

MATERIALS: SEE PARTS LIST

PROTECTIVE FINISH: NONE

UNLESS OTHERWISE SPECIFIED:
1. DIMENSIONS ARE IN INCHES.
2. MIN SURFACE TEXTURE: 125
3. TOLERANCES APPLY AFTER PLATING.
4. REMOVE BURRS AND SHARP EDGES.
5. DO NOT SCALE DRAWING.
6. TOLERANCES: .X ± 0.1, .XX ± 0.01, .XXX ± 0.005; FRACTIONS ± 1/64; MACHINED ANGLES ± 1°

USED ON: 880

DRAWN	S.GRENIER	11SEP00
CHECKED	M.TREMBLAY	11SEP00
APPR.	M.TREMBLAY	11SEP00

THIRD ANGLE PROJECTION

SAFETY CLASS C

AEA TECHNOLOGY QSA
40 NORTH AVE, BURLINGTON, MA 01803

TITLE: BODY WELDMENT DELTA SIMULATOR

SIZE B | DWG. NO. 88011XLS | REV B

SCALE: 1/2 | SHEET 1 OF 1.

PROTOTYPE
PROCESS IN ACCORDANCE WITH ENGINEERING INSTRUCTIONS
ENG DATE 09JAN00

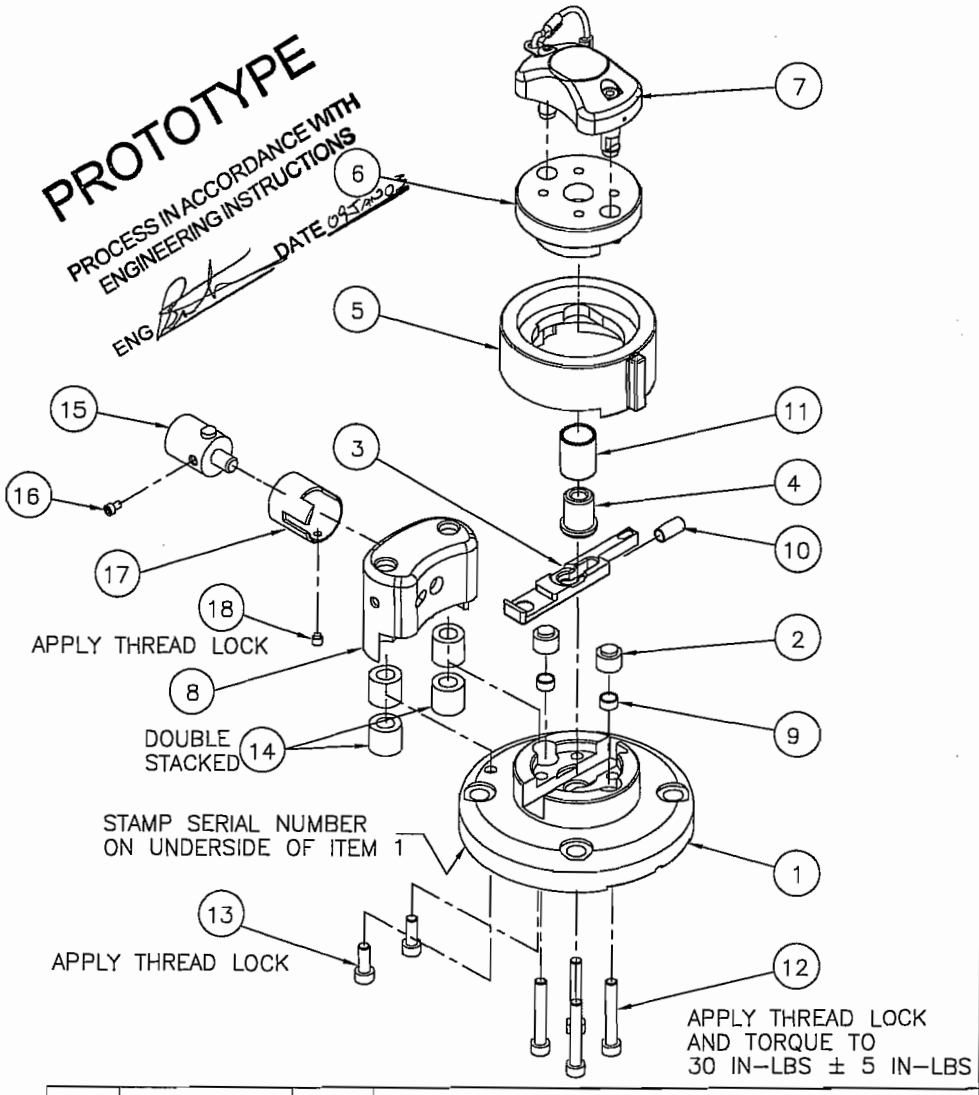

ITEM	DRAWING NO.	QTY.	DESCRIPTION
18	SCR225	1	DOG POINT SET SCREW
17	88022-1	1	STAINLESS STEEL SLEEVE

REVISIONS

REV.	ERF #	DESCRIPTION	APPROVALS	DATE
5		ADDED ITEMS 17 AND 18	SEE TITLE	BLOCK

ITEM	DRAWING NO.	QTY.	DESCRIPTION
16	SCR023	1	SOCKET HEAD SCREW
15	A66001-11	1	LOCK REWORK
14	SLV005	4	RUBBER SLEEVE
13	SCR072	2	SOCKET HEAD CAP SCREW
12	SCR002	4	SOCKET HEAD CAP SCREW
11	SPR005	1	COMPRESSION SPRING
10	SPR006	1	COMPRESSION SPRING
9	SPR004	2	COMPRESSION SPRING
8	A88022	1	LOCK MOUNT
7	B88014	1	LOCK COVER ASSEMBLY
6	B85701-5	1	SELECTOR RING RETAINER
5	A88026	1	SELECTOR RING
4	A88025	1	SLEEVE
3	A88024	1	LOCK SLIDE
2	A66001-6	2	ANTI-ROTATE LUGS
1	C88021	1	REAR PLATE

THIS DRAWING IS THE EXCLUSIVE PROPERTY OF AEA TECHNOLOGY QSA. IT MAY ONLY BE USED FOR THE PURPOSE FOR WHICH IT WAS ISSUED. IT MAY NOT BE DUPLICATED IN ANY WAY, NOR TRANSMITTED TO ANY THIRD PARTY WITHOUT THE EXPRESS PERMISSION OF AEA TECHNOLOGY QSA.

MATERIALS: SEE PARTS LIST

PROTECTIVE FINISH: NONE

UNLESS OTHERWISE SPECIFIED;
1. DIMENSIONS ARE IN INCHES.
2. MIN SURFACE TEXTURE: 63
3. DIMENSIONS APPLY AFTER FINISH.
4. REMOVE BURRS AND SHARP EDGES.
5. DO NOT SCALE DRAWING.
6. TOLERANCES: .X ± 0.1, .XX ± 0.01, .XXX ± 0.005; FRACTIONS ± 1/64; ANGLES ± 1°

880

DRAWN	S.GRENIER	20JUL00
CHECKED	M.TREMBLAY	20JUL00
APPR.	M.TREMBLAY	20JUL00

THIRD ANGLE PROJECTION

QUALITY CLASS A

AEA TECHNOLOGY QSA
40 NORTH AVE, BURLINGTON, MA 01803

TITLE: REAR PLATE ASSEMBLY

SIZE B | DWG. NO. 88020 | REV 5

SCALE: 1/2 | SHEET 1 OF 1

PROTOTYPE

PROCESS IN ACCORDANCE WITH ENGINEERING INSTRUCTIONS

ENG Buttrick DATE 07OCT02

REVISIONS				
REV.	ERF #	DESCRIPTION	APPROVALS	DATE
3	N/A	PROTOTYPE RELEASE	SEE TITLE	BLOCK

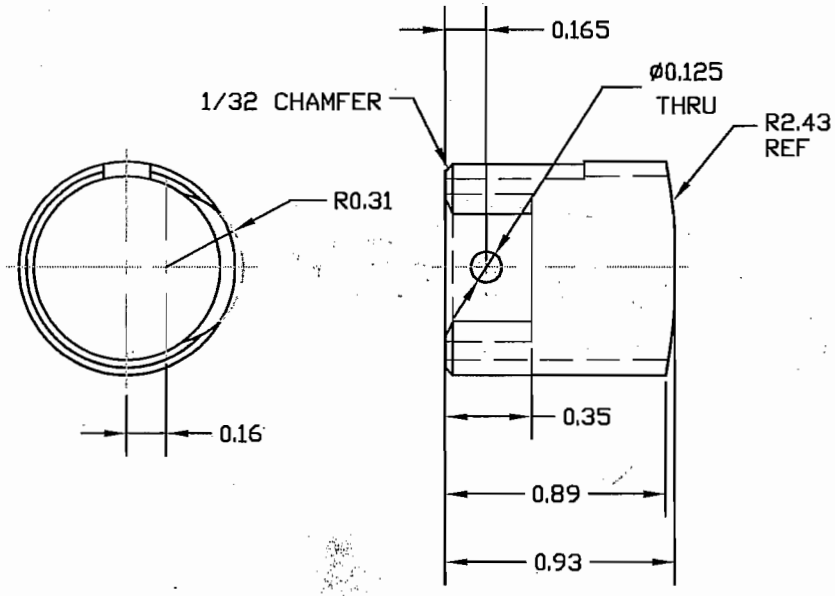

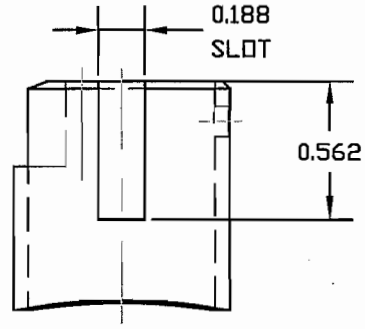

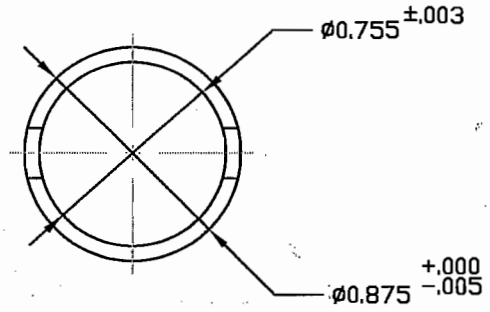

THIS DRAWING IS THE EXCLUSIVE PROPERTY OF AEA TECHNOLOGY QSA. IT MAY ONLY BE USED FOR THE PURPOSE FOR WHICH IT WAS ISSUED. IT MAY NOT BE DUPLICATED IN ANY WAY, NOR TRANSMITTED TO ANY THIRD PARTY WITHOUT THE EXPRESS PERMISSION OF AEA TECHNOLOGY QSA.

MATERIALS: 300 SERIES STAINLESS STEEL

PROTECTIVE FINISH: NONE

UNLESS OTHERWISE SPECIFIED;
1. DIMENSIONS ARE IN INCHES.
2. MIN SURFACE TEXTURE: 63
3. DIMENSIONS APPLY AFTER FINISH.
4. REMOVE BURRS AND SHARP EDGES.
5. DO NOT SCALE DRAWING.
6. TOLERANCES: .X ± 0.1, .XX ± 0.01, .XXX ± 0.005; FRACTIONS ± 1/64; ANGLES ± 1°

DRAWN		
CHECKED	NA	
APPR.		

THIRD ANGLE PROJECTION

QUALITY CLASS B

AEA TECHNOLOGY QSA
40 NORTH AVE, BURLINGTON, MA 01803

TITLE: LOCK MOUNT S.S. INSERT

SIZE B | DWG. NO. 88022-1 | REV 3

SCALE: 1:1 | SHEET 1 OF 1

PROTOTYPE

PROCESS IN ACCORDANCE WITH ENGINEERING INSTRUCTIONS

ENG BUTCHICK DATE 07OCT02

NOTES:

1. PROTECTIVE FINISH: CLEAR ANODIZE PER MIL-A-8625, .[illegible] THICK, COLOR: CLEAR.
2. DIMENSIONS APPLY AFTER PLATING.
3. FINISH DOES NOT APPLY TO THREADED HOLES.

REVISIONS				
REV.	ECO/TGR #	DESCRIPTION	APPROVALS	DATE
A	2701	INITIAL RELEASE	SEE TITLE	BLOCK
B	2812	CHANGE PLATING NOTES, ADDED CHAMFERS		
6		HOLE WAS .858, NOW .880 +.000/-.003		
7		ADDED 8-32 THREADED HOLE		

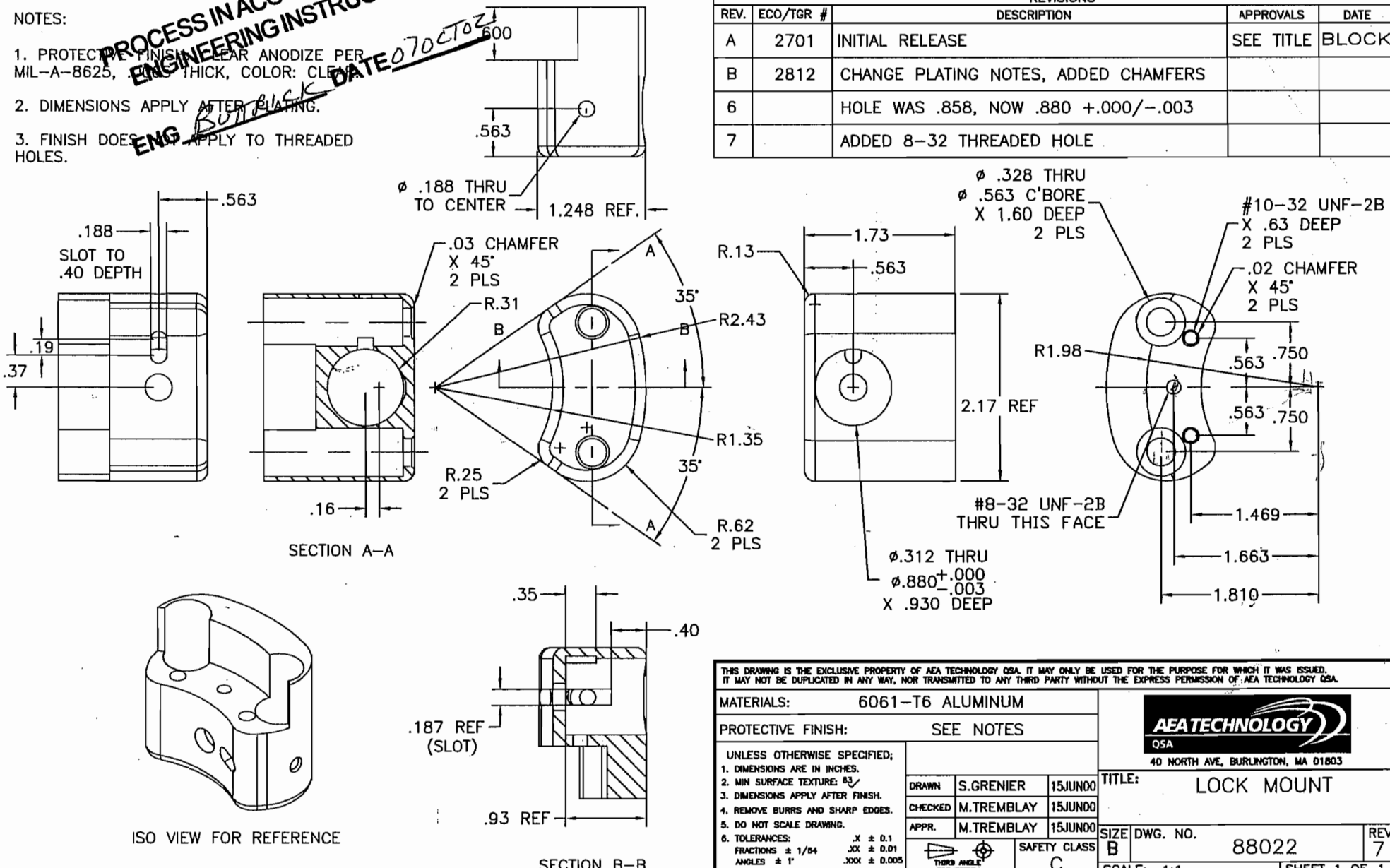

THIS DRAWING IS THE EXCLUSIVE PROPERTY OF AEA TECHNOLOGY QSA. IT MAY ONLY BE USED FOR THE PURPOSE FOR WHICH IT WAS ISSUED. IT MAY NOT BE DUPLICATED IN ANY WAY, NOR TRANSMITTED TO ANY THIRD PARTY WITHOUT THE EXPRESS PERMISSION OF AEA TECHNOLOGY QSA.

MATERIALS: 6061-T6 ALUMINUM

PROTECTIVE FINISH: SEE NOTES

UNLESS OTHERWISE SPECIFIED;
1. DIMENSIONS ARE IN INCHES.
2. MIN SURFACE TEXTURE: 63
3. DIMENSIONS APPLY AFTER FINISH.
4. REMOVE BURRS AND SHARP EDGES.
5. DO NOT SCALE DRAWING.
6. TOLERANCES: FRACTIONS ± 1/64, ANGLES ± 1°, .X ± 0.1, .XX ± 0.01, .XXX ± 0.005

DRAWN	S.GRENIER	15JUN00
CHECKED	M.TREMBLAY	15JUN00
APPR.	M.TREMBLAY	15JUN00

THIRD ANGLE PROJECTION

SAFETY CLASS C

AEA TECHNOLOGY QSA
40 NORTH AVE, BURLINGTON, MA 01803

TITLE: LOCK MOUNT

SIZE B | DWG. NO. 88022 | REV 7

SCALE: 1:1 | SHEET 1 OF 1

610
663
1.47

REVISIONS				
V.	ECO/TGR #	DESCRIPTION	APPROVALS	DATE
		PROTOTYPE RELEASE	SEE TITLE	BLOCK

SPECIFICATIONS:

1. TYPE: SOCKET SET SCREW, HALF DOG POINT.
2. SIZE: 8–32 UNC–2A X 3/16 LONG.
3. MATERIAL: 18–8 STAINLESS STEEL.

S DRAWING IS THE EXCLUSIVE PROPERTY OF AEA TECHNOLOGY QSA. IT MAY ONLY BE USED FOR THE PURPOSE FOR WHICH IT WAS ISSUED.
MAY NOT BE DUPLICATED IN ANY WAY, NOR TRANSMITTED TO ANY THIRD PARTY WITHOUT THE EXPRESS PERMISSION OF AEA TECHNOLOGY QSA.

ATERIALS: SPECIFICATION #3

ROTECTIVE FINISH: NONE

NLESS OTHERWISE SPECIFIED;
DIMENSIONS ARE IN INCHES.
MIN SURFACE TEXTURE: 125
TOLERANCES APPLY AFTER PLATING.
REMOVE BURRS AND SHARP EDGES.
DO NOT SCALE DRAWING.
TOLERANCES: .X ± 0.1
FRACTIONS ± 1/64 .XX ± 0.01
.XXX ± 0.005

USED ON: 880

DRAWN		
CHECKED		
APPR.		

SAFETY CLASS

AEA TECHNOLOGY QSA
40 NORTH AVE, BURLINGTON, MA 01803

TITLE: 8–32 X 3/16 LONG DOG PT. SET SCREW

SIZE	DWG. NO.	REV
A	SCR225	1

AEA TECHNOLOGY
QSA

FORM E001 rev A

Bill Of Materials

Part No.: 88070

Title: FOOT CONTROL BUTTON ASSY.

Rev: C

Rev	ERF	Date	Ckd.	Appvd.	Rev	ECO	Date	Ckd.	Appvd.	Rev	ECO	Date	Ckd.	Appvd.
A	2871	6APR01	PAB	MT										
B	15	25Jun01	RLM	PAB										
C	27	11JUL01	PAB	[illegible]										

Item	Qty	P/N	Description
1	0	A88070	FOOT CONTROL BUTTON ASSEMBLY
2	1	B88070-1	FOOT CONTROL SLEEVE
3	1	B88070-2	FOOT CONTROL END
4	1	A88070-3	FOOT CONTROL KNOB
5	1	B88070-4	FOOT CONTROL SHAFT
6	1	B88070-5	FOOT CONTROL CORE
7	4	SCR210	#6-32 SOCKET HEAD CAP SCREW 3/8" LONG
8	1	SPR040	SPRING, 3/8" LONG X .48" O.D. (61 lbs./in.)
9	1	SPR041	SPRING, 3/4" LONG X .48" O.D. (19 lbs./in.)
10	1	BAG003	7" x 9" zip lock bag
11	1	INST 02	Instruction Sheet - Foot Control Button
12	1	TOL009	7/64 Hex Key

REVISIONS				
EV.	ERF #	DESCRIPTION	APPROVALS	DATE
B	27	CHANGED SPRINGS/ ADDED BALLOONS	PAB	11SOLC1

07-FEB-03
9:45 AM
PAB

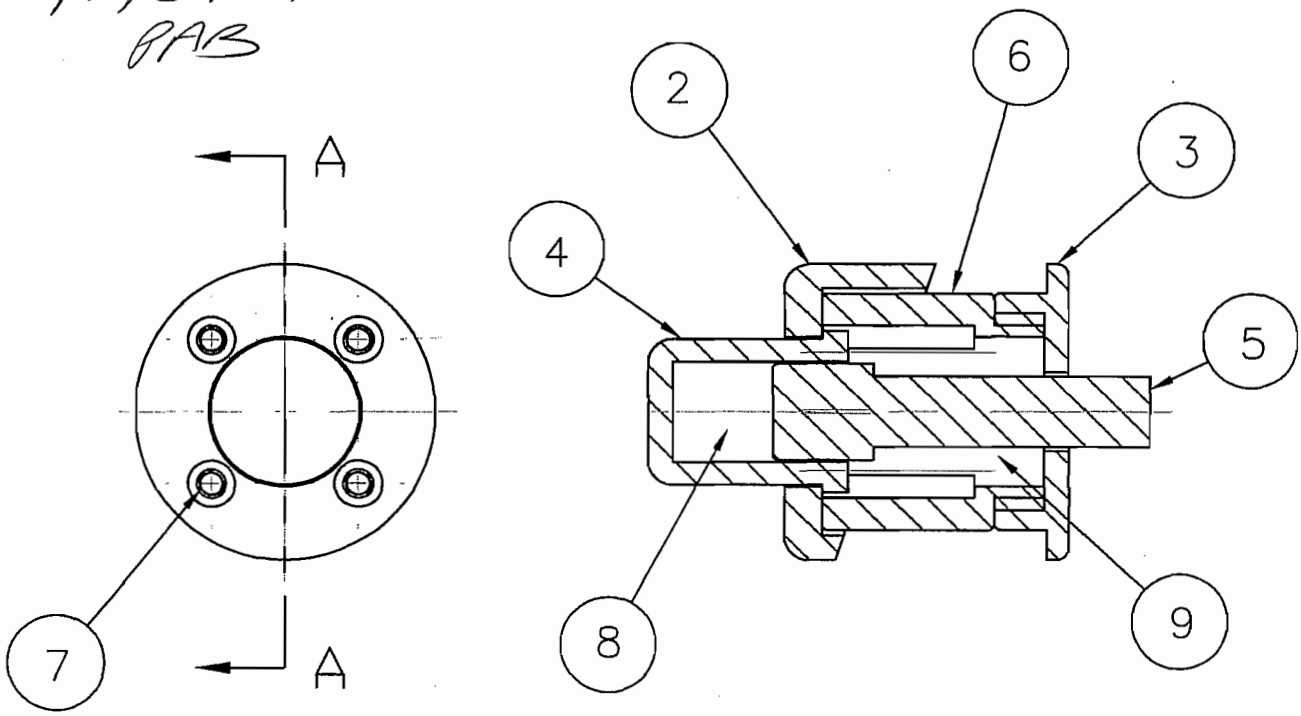

SECTION A–A

NOTE: SEE BILL OF MATERIALS FOR PART INFORMATION.

IS DRAWING IS THE EXCLUSIVE PROPERTY OF AEA TECHNOLOGY QSA. IT MAY ONLY BE USED FOR THE PURPOSE FOR WHICH IT WAS ISSUED. MAY NOT BE DUPLICATED IN ANY WAY, NOR TRANSMITTED TO ANY THIRD PARTY WITHOUT THE EXPRESS PERMISSION OF AEA TECHNOLOGY QSA.

ATERIALS: AISI TYPE 304 STAINLESS STEEL

ROTECTIVE FINISH: NONE

INLESS OTHERWISE SPECIFIED;
DIMENSIONS ARE IN INCHES.
MIN SURFACE TEXTURE: 63
DIMENSIONS APPLY AFTER FINISH.
REMOVE BURRS AND SHARP EDGES.
DO NOT SCALE DRAWING.
TOLERANCES: .X ± 0.1
FRACTIONS ± 1/64 .XX ± 0.01
ANGLES ± 1° .XXX ± 0.005

DRAWN	P.BUTTRICK	10APR01
CHECKED	M.TREMBLAY	10APR01
APPR.	M.TREMBLAY	10APR01

THIRD ANGLE PROJECTION

SAFETY CLASS B

AEA TECHNOLOGY QSA
40 NORTH AVE, BURLINGTON, MA 01803

TITLE: FOOT CONTROL BUTTON ASSEMBLY

SIZE	DWG. NO.	REV
A	88070	B

SCALE: 1:1 SHEET 1 OF 1

REVISIONS				
REV.	ECO/TGR #	DESCRIPTION	APPROVALS	DATE
A	2871	INITIAL RELEASE	SEE TITLE	BLOCK
B	2877	CHG. R.025 TO R.125, ADDED R.062	P.A.B./M.T.	20APR01
C	2887	WAS 10-32 THREAD, NOW 6-32	PAB/MOB	15MAY01

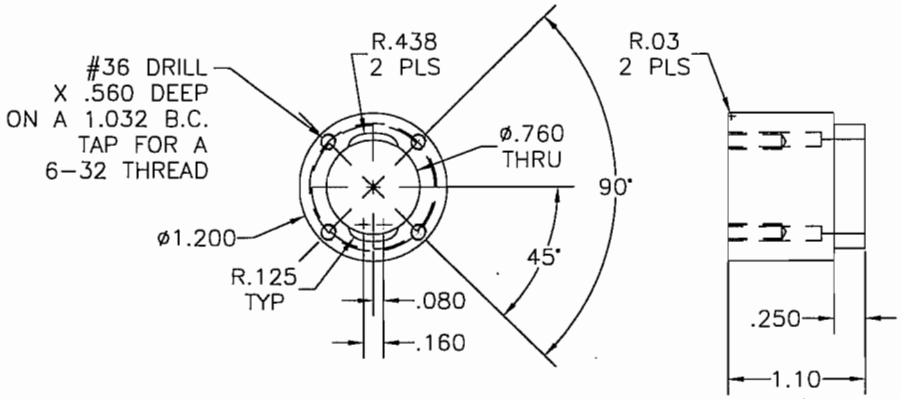

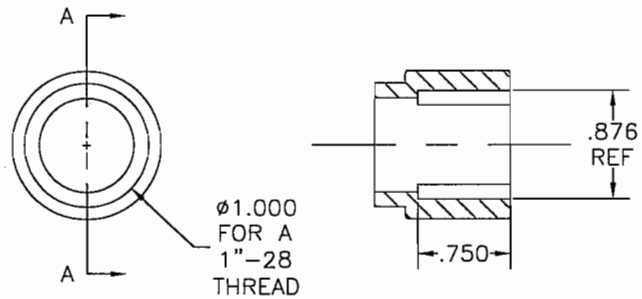

SECTION A-A

THIS DRAWING IS THE EXCLUSIVE PROPERTY OF AEA TECHNOLOGY QSA. IT MAY ONLY BE USED FOR THE PURPOSE FOR WHICH IT WAS ISSUED. IT MAY NOT BE DUPLICATED IN ANY WAY, NOR TRANSMITTED TO ANY THIRD PARTY WITHOUT THE EXPRESS PERMISSION OF AEA TECHNOLOGY QSA.

MATERIALS: AISI TYPE 304 STAINLESS STEEL

PROTECTIVE FINISH: PASSIVATE PER MILS-5002C

UNLESS OTHERWISE SPECIFIED;
1. DIMENSIONS ARE IN INCHES.
2. MIN SURFACE TEXTURE: 63
3. DIMENSIONS APPLY AFTER FINISH.
4. REMOVE BURRS AND SHARP EDGES.
5. DO NOT SCALE DRAWING.
6. TOLERANCES: .X ± 0.1, .XX ± 0.01, .XXX ± 0.005; FRACTIONS ± 1/64; ANGLES ± 1°

DRAWN	P.BUTTRICK	10APR01
CHECKED	M.TREMBLAY	10APR01
APPR.	M.TREMBLAY	10APR01

THIRD ANGLE PROJECTION

SAFETY CLASS B

AEA TECHNOLOGY QSA
40 NORTH AVE, BURLINGTON, MA 01803

TITLE: FOOT CONTROL CORE

SIZE B | DWG. NO. 88070-5 | REV C

SCALE: 1:1 | SHEET 1 OF 1

REVISIONS				
REV.	ECO/TGR #	DESCRIPTION	APPROVALS	DATE
A	2871	INITIAL RELEASE	SEE TITLE	BLOCK
B	2877	ADDED CENTER MARK NOTE	PAB/M.T.	20APR01
C	2892	WAS .500,NOW .437 & WAS 1.38,NOW 1.500	PAB/[illegible]	24MAY01

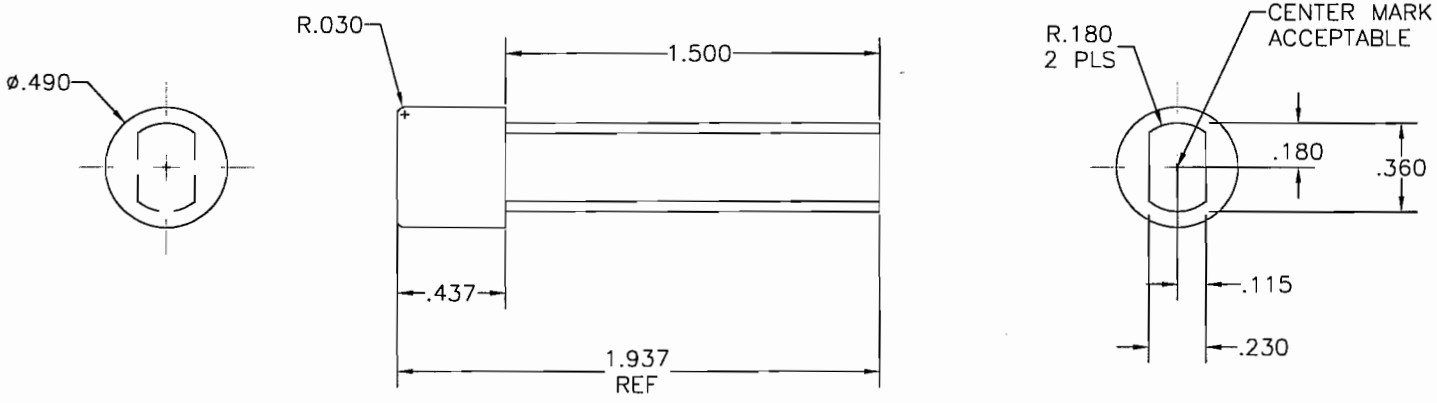

THIS DRAWING IS THE EXCLUSIVE PROPERTY OF AEA TECHNOLOGY QSA. IT MAY ONLY BE USED FOR THE PURPOSE FOR WHICH IT WAS ISSUED. IT MAY NOT BE DUPLICATED IN ANY WAY, NOR TRANSMITTED TO ANY THIRD PARTY WITHOUT THE EXPRESS PERMISSION OF AEA TECHNOLOGY QSA.

MATERIALS: AISI TYPE 304 STAINLESS STEEL

PROTECTIVE FINISH: PASSIVATE PER MILS-5002C

UNLESS OTHERWISE SPECIFIED;
1. DIMENSIONS ARE IN INCHES.
2. MIN SURFACE TEXTURE: 63
3. DIMENSIONS APPLY AFTER FINISH.
4. REMOVE BURRS AND SHARP EDGES.
5. DO NOT SCALE DRAWING.
6. TOLERANCES: .X ± 0.1, .XX ± 0.01, .XXX ± 0.005; FRACTIONS ± 1/64; ANGLES ± 1°

DRAWN	P.BUTTRICK	10APR01
CHECKED	M.TREMBLAY	10APR01
APPR.	M.TREMBLAY	10APR01

THIRD ANGLE PROJECTION

SAFETY CLASS B

AEA TECHNOLOGY QSA
40 NORTH AVE, BURLINGTON, MA 01803

TITLE: FOOT CONTROL SHAFT

SIZE B | DWG. NO. 88070-4 | REV C

SCALE: 1:1 | SHEET 1 OF 1

REVISIONS				
REV.	ECO/TGR #	DESCRIPTION	APPROVALS	DATE
A	2871	INITIAL RELEASE	SEE TITLE	BLOCK
B	2885	PICTORIAL DRAWING CHANGE	PAB/MT	8MAY01
C	5	CHANGED TOERANCES	PAB/RLM	26JUN01

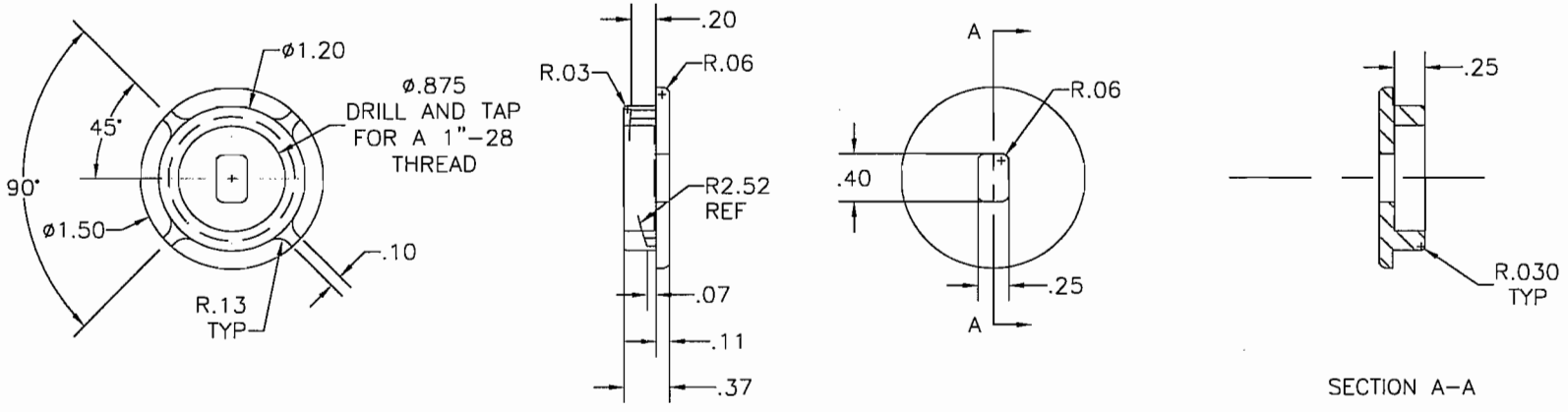

THIS DRAWING IS THE EXCLUSIVE PROPERTY OF AEA TECHNOLOGY QSA. IT MAY ONLY BE USED FOR THE PURPOSE FOR WHICH IT WAS ISSUED. IT MAY NOT BE DUPLICATED IN ANY WAY, NOR TRANSMITTED TO ANY THIRD PARTY WITHOUT THE EXPRESS PERMISSION OF AEA TECHNOLOGY QSA.

MATERIALS: AISI TYPE 304 STAINLESS STEEL

PROTECTIVE FINISH: PASSIVATE PER MILS-5002C

UNLESS OTHERWISE SPECIFIED:
1. DIMENSIONS ARE IN INCHES.
2. MIN SURFACE TEXTURE: 63
3. DIMENSIONS APPLY AFTER FINISH.
4. REMOVE BURRS AND SHARP EDGES.
5. DO NOT SCALE DRAWING.
6. TOLERANCES: .X ± 0.1, .XX ± 0.01, .XXX ± 0.005; FRACTIONS ± 1/64; ANGLES ± 1°

DRAWN	P.BUTTRICK	10APR01
CHECKED	M.TREMBLAY	10APR01
APPR.	M.TREMBLAY	10APR01

THIRD ANGLE PROJECTION

SAFETY CLASS B

AEA TECHNOLOGY QSA
40 NORTH AVE, BURLINGTON, MA 01803

TITLE: FOOT CONTROL END

SIZE B | DWG. NO. 88070-2 | REV C

SCALE: 1:1 | SHEET 1 OF 1

REVISIONS				
REV.	ECO/TGR #	DESCRIPTION	APPROVALS	DATE
A	2871	INITIAL RELEASE	SEE TITLE	BLOCK

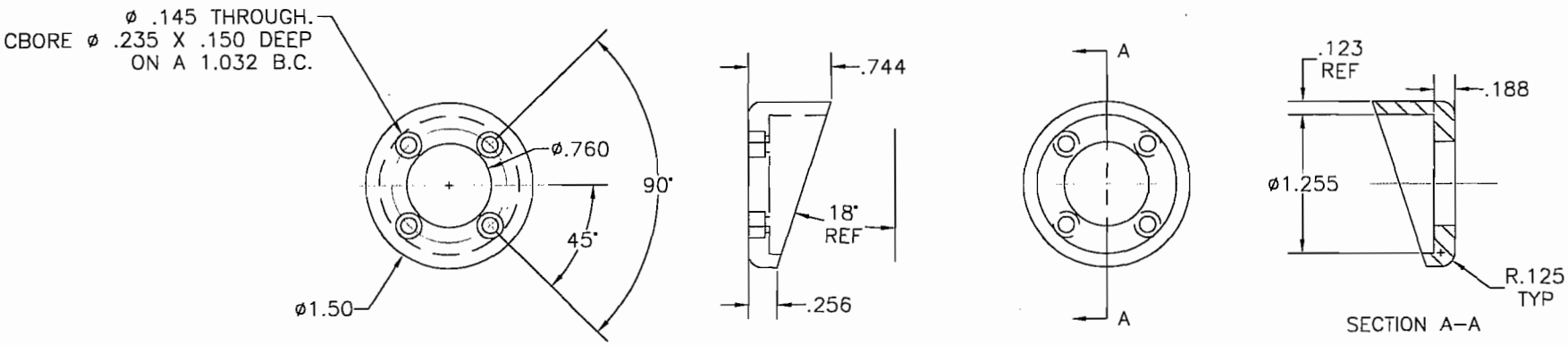

THIS DRAWING IS THE EXCLUSIVE PROPERTY OF AEA TECHNOLOGY QSA. IT MAY ONLY BE USED FOR THE PURPOSE FOR WHICH IT WAS ISSUED. IT MAY NOT BE DUPLICATED IN ANY WAY, NOR TRANSMITTED TO ANY THIRD PARTY WITHOUT THE EXPRESS PERMISSION OF AEA TECHNOLOGY QSA.

MATERIALS: AISI TYPE 304 STAINLESS STEEL

PROTECTIVE FINISH: PASSIVATE PER MILS-5002C

UNLESS OTHERWISE SPECIFIED:
1. DIMENSIONS ARE IN INCHES.
2. MIN SURFACE TEXTURE: 63
3. DIMENSIONS APPLY AFTER FINISH.
4. REMOVE BURRS AND SHARP EDGES.
5. DO NOT SCALE DRAWING.
6. TOLERANCES: FRACTIONS ± 1/64, ANGLES ± 1°, .X ± 0.1, .XX ± 0.01, .XXX ± 0.005

DRAWN		10/21/21
CHECKED		10/22/21
APPR.		10/22/21

THIRD ANGLE PROJECTION

SAFETY CLASS B

AEA TECHNOLOGY QSA
40 NORTH AVE, BURLINGTON, MA 01803

TITLE: FOOT CONTROL SLEEVE

SIZE	DWG. NO.	REV
B	88070-1	A

SCALE: 1:1 SHEET 1 OF 1

REVISIONS				
REV.	ECO/TGR #	DESCRIPTION	APPROVALS	DATE
A	2871	INITIAL RELEASE	SEE TITLE	BLOCK
B	2877	CHG. R.025 TO R.063, ADDED DRILL NOTE	PB / [illegible]	20APR01

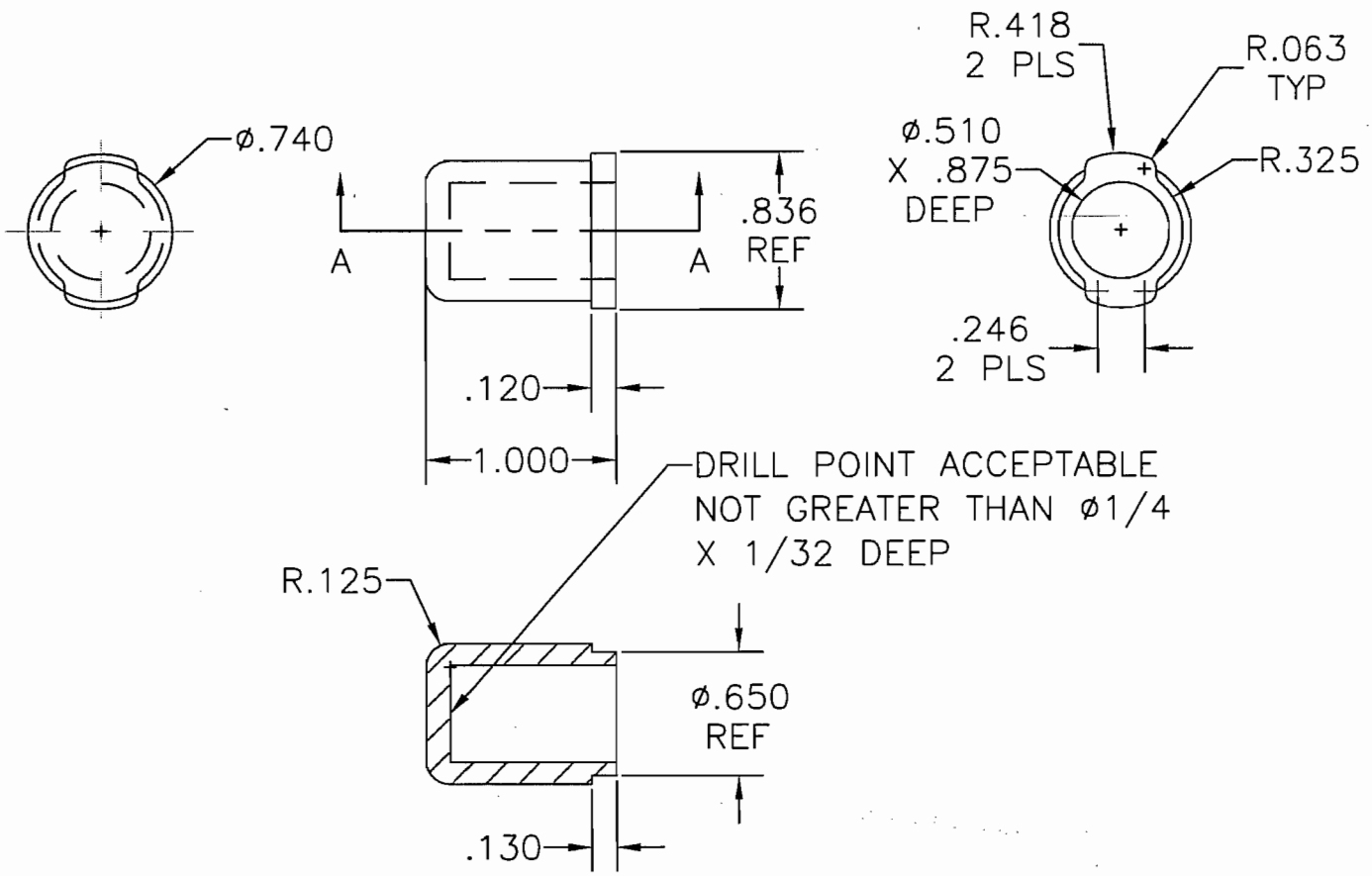

SECTION A–A

THIS DRAWING IS THE EXCLUSIVE PROPERTY OF AEA TECHNOLOGY QSA. IT MAY ONLY BE USED FOR THE PURPOSE FOR WHICH IT WAS ISSUED. IT MAY NOT BE DUPLICATED IN ANY WAY, NOR TRANSMITTED TO ANY THIRD PARTY WITHOUT THE EXPRESS PERMISSION OF AEA TECHNOLOGY QSA.

MATERIALS: AISI TYPE 304 STAINLESS STEEL

PROTECTIVE FINISH: PASSIVATE PER MILS–5002C

UNLESS OTHERWISE SPECIFIED;
1. DIMENSIONS ARE IN INCHES.
2. MIN SURFACE TEXTURE: 63
3. DIMENSIONS APPLY AFTER FINISH.
4. REMOVE BURRS AND SHARP EDGES.
5. DO NOT SCALE DRAWING.
6. TOLERANCES: .X ± 0.1, FRACTIONS ± 1/64, .XX ± 0.01, ANGLES ± 1°, .XXX ± 0.005

DRAWN	P.BUTTRICK	10APR01
CHECKED	M.TREMBLAY	10APR01
APPR.	M.TREMBLAY	10APR01

THIRD ANGLE PROJECTION

SAFETY CLASS B

AEA TECHNOLOGY QSA

40 NORTH AVE, BURLINGTON, MA 01803

TITLE: FOOT CONTROL KNOB

SIZE A | DWG. NO. 88070–3 | REV B

SCALE: 1:1 | SHEET 1 OF 1

REVISIONS				
REV.	ECO/TGR #	DESCRIPTION	APPROVALS	DATE
A	2871	INITIAL RELEASE	SEE TITLE	BLOCK
B	2877	ADDED CENTER MARK NOTE	PAB/M.T.	20APR01
C	2892	WAS .500,NOW .437 & WAS 1.38,NOW 1.500		
3	N/A	PROTOTYPE PART		

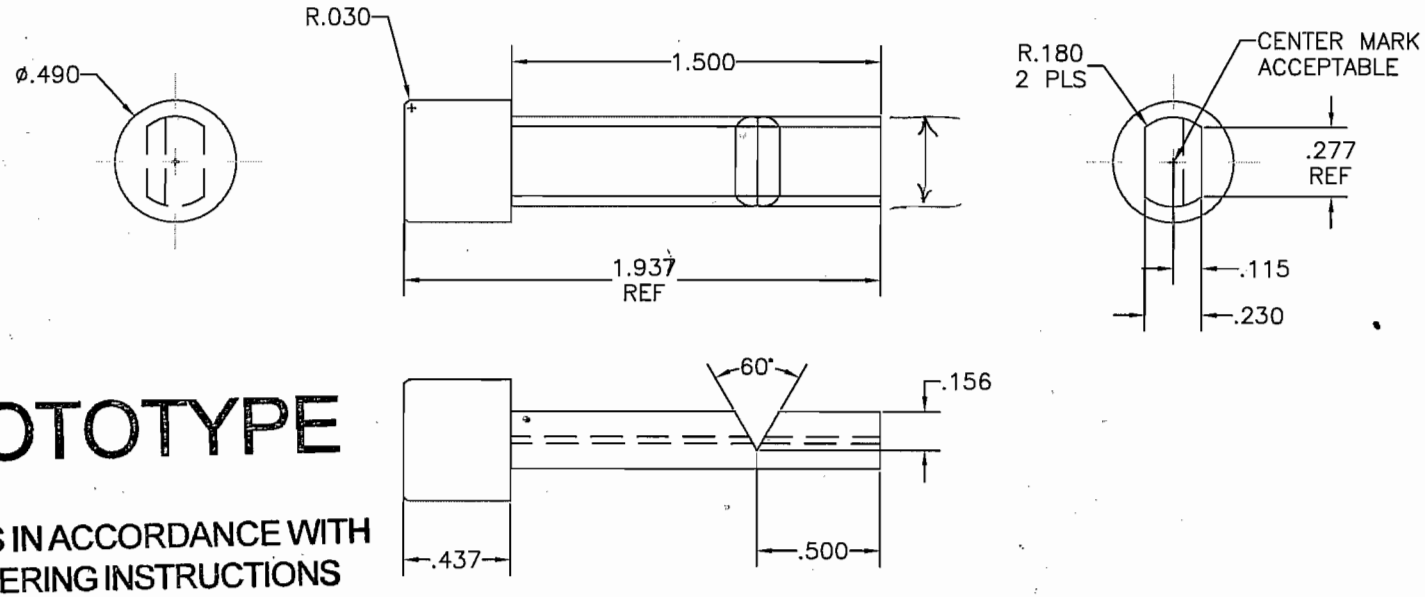

PROTOTYPE

PROCESS IN ACCORDANCE WITH ENGINEERING INSTRUCTIONS

ENG BUTTRICK DATE 20SEP02

"RETURN PARTS TO ENGINEERING"

THIS DRAWING IS THE EXCLUSIVE PROPERTY OF AEA TECHNOLOGY QSA. IT MAY ONLY BE USED FOR THE PURPOSE FOR WHICH IT WAS ISSUED. IT MAY NOT BE DUPLICATED IN ANY WAY, NOR TRANSMITTED TO ANY THIRD PARTY WITHOUT THE EXPRESS PERMISSION OF AEA TECHNOLOGY QSA.

MATERIALS: G-10 FIBERGLASS

PROTECTIVE FINISH: N/A

UNLESS OTHERWISE SPECIFIED;
1. DIMENSIONS ARE IN INCHES.
2. MIN SURFACE TEXTURE: 63
3. DIMENSIONS APPLY AFTER FINISH.
4. REMOVE BURRS AND SHARP EDGES.
5. DO NOT SCALE DRAWING.
6. TOLERANCES: .X ± 0.1, FRACTIONS ± 1/64, .XX ± 0.01, ANGLES ± 1°, .XXX ± 0.005

DRAWN	P.BUTTRICK	10APR01
CHECKED	M.TREMBLAY	10APR01
APPR.	M.TREMBLAY	10APR01

THIRD ANGLE PROJECTION

SAFETY CLASS B

AEA TECHNOLOGY QSA
40 NORTH AVE, BURLINGTON, MA 01803

TITLE: FOOT CONTROL SHAFT

SIZE B | DWG. NO. 88070-4 | REV 3

SCALE: 1:1 | SHEET 1 OF 1

REVISIONS				
REV.	ECO/TGR #	DESCRIPTION	APPROVALS	DATE
A	2871	INITIAL RELEASE	SEE TITLE	BLOCK
B	2877	ADDED CENTER MARK NOTE	PAB/M.T.	20APR01
C	2892	WAS .500,NOW .437 & WAS 1.38,NOW 1.500		
3	N/A	PROTOTYPE PART		

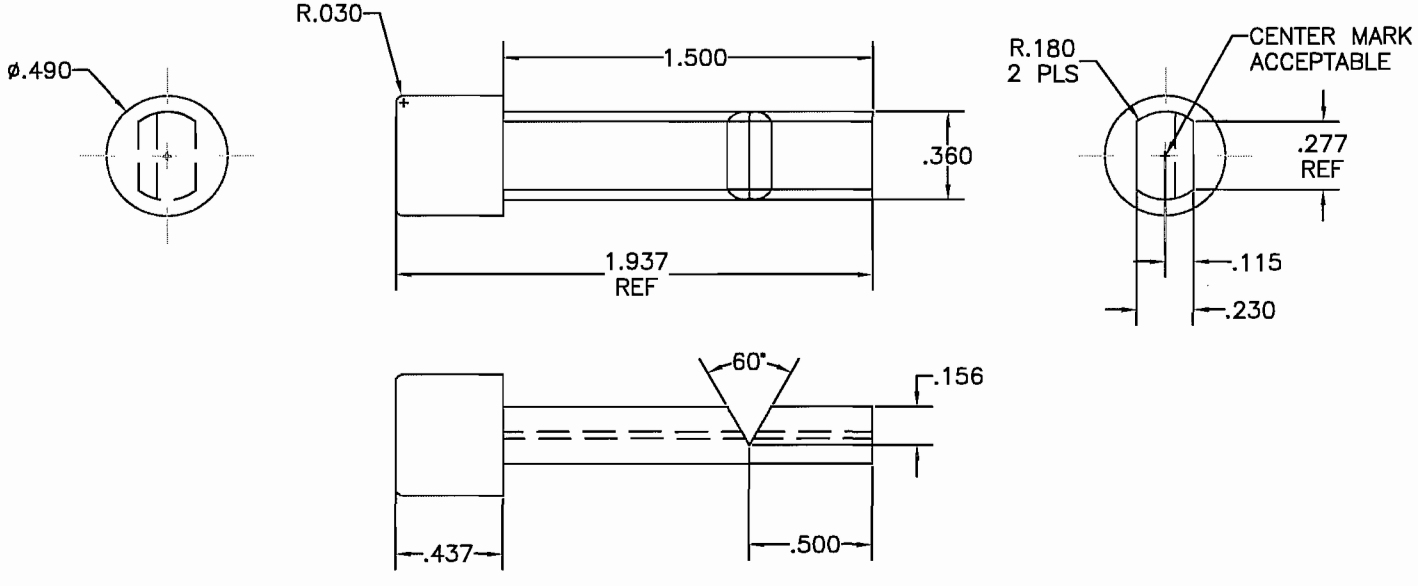

THIS DRAWING IS THE EXCLUSIVE PROPERTY OF AEA TECHNOLOGY QSA. IT MAY ONLY BE USED FOR THE PURPOSE FOR WHICH IT WAS ISSUED. IT MAY NOT BE DUPLICATED IN ANY WAY, NOR TRANSMITTED TO ANY THIRD PARTY WITHOUT THE EXPRESS PERMISSION OF AEA TECHNOLOGY QSA.

MATERIALS: G-10 FIBERGLASS

PROTECTIVE FINISH: N/A

UNLESS OTHERWISE SPECIFIED;
1. DIMENSIONS ARE IN INCHES.
2. MIN SURFACE TEXTURE: 63
3. DIMENSIONS APPLY AFTER FINISH.
4. REMOVE BURRS AND SHARP EDGES.
5. DO NOT SCALE DRAWING.
6. TOLERANCES: FRACTIONS ± 1/64, ANGLES ± 1°, .X ± 0.1, .XX ± 0.01, .XXX ± 0.005

DRAWN	P.BUTTRICK	10APR01
CHECKED	M.TREMBLAY	10APR01
APPR.	M.TREMBLAY	10APR01

THIRD ANGLE PROJECTION

SAFETY CLASS B

AEATECHNOLOGY QSA
40 NORTH AVE, BURLINGTON, MA 01803

TITLE: FOOT CONTROL SHAFT

SIZE B | DWG. NO. 88070-4 | REV 3

SCALE: 1:1 | SHEET 1 OF 1

Section 8. APPENDIX B – CALCULATIONS

(1)
F.C.B.A.

Horizontal Shock Test
ISO 3999-1

Test Specimen:

Drawing No. 88017XLS/TP125A Rev. B Serial Number: 12

Test weight 49 LBS Scale Used FWC DWM IV
CAL. DATE MAY 28 2003

Test Setup:

Set up per: ISO 3999-1 (6.4.6.1) horizontal shock test procedure.

Pictures: K:\TEST PLAN\TP125A

Notes:

Horizontal Test Bar:

Drawing No. T10333 SN01 Rev. A Location: ENGR TEST CAGE

Test Period:

Date & time: 13FEB03 2:30 PM

Specimen Damage:

G-10 SHAFT BROKE AFTER 4TH HIT. FINISHED TEST OF 20 HITS. F.C.B.A. DID NOT WORK AT COMPLETION. UNIT (880) WAS NOT DAMAGED, WORKED FINE. PASSED TEST.

Post test assessment:

Recorded by:	Date: 14FEB03
Witnessed by:	Date: 13FEB03
Regulatory reviewed by:	Date: 13 Feb 03
Q.A. reviewed by:	Date: 13 feb 03

(1)

LOCK MOUNT

Horizontal Shock Test
ISO 3999-1

Test Specimen:

Drawing No. 88017X/S/TP125A Rev. B Serial Number: 12

Test weight 49 LBS. Scale Used FWC DWM-II

CAL. DATE MAY 28 2003

Test Setup:

Set up per: ISO 3999-1 (6.4.6.1) horizontal shock test procedure.

Pictures: K:\TEST PLAN\TP125A

Notes:

Horizontal Test Bar:

Drawing No. T10333 SNO1 Rev. A Location: ENGR. STOCK CAGE

Test Period:

Date & time: 13FEB03 3PM

Specimen Damage:

ALUMINUM LOCK MOUNT W/S.S. INSERT WAS HIT 20 TIMES. FRONT OF LOCK MOUNT DAMAGED BUT FUNCTIONED PROPERLY. KEY ACTUATION WAS SMOOTH. PASSED TEST.

Post test assessment:

Recorded by:	Date: 13FEB03
Witnessed by:	Date: 13 Feb 03
Regulatory reviewed by:	Date: 13 Feb 03
Q.A. reviewed by:	Date: 13feb04

Penetration Test
10CRF71

Test Specimen:

Drawing No. 88017XLS/TP125A Rev. B Serial Number: 12

Test weight 49 LBS. Scale Used FWC DWM IV
CAL. DATE 28 MAY 03

Test Setup:

Set up per: 10CR71 (71.71(10)) penetration test procedure.

Pictures: K:\TEST PLAN\TP125

Notes:

Drop surface:

Drawing No. J10129 SN01 Rev. A Location: ENG./SHIPPING

Test Period:

Date & time: 17 FEB03 9:30 AM

Specimen Damage:

UPON DROPPING BAR ON THE F.C.B.A. THE 6-10 SHAFT BROKE. THE F.C.B.A. NEEDED TO BE DIS-ASSEMBLED TO ACTUATE THE SELECTOR RING AND LOCK SLIDE. UNIT WORKED FINE, PASSED TEST.

Post test assessment:

Recorded by:	Date: 17FEB03
Witnessed by:	Date: 17FEB03
Regulatory reviewed by:	Date: 17Feb03
Q.A. reviewed by:	Date: 17Feb03

Free Drop Test
10CRF71

Test Specimen:

Drawing No. 88017 XLS/TP125A Rev. B Serial Number: 12

Test weight 49 LBS. Scale Used PWC DWM IV
CAL. DATE 28 MAY03

Test Setup:

Set up per: 10CFR71 (71.73(1)) free drop test procedure.

Pictures: K:\TEST PLAN\TP125B

Notes:
SUSPENDED UNIT BY EYEHOOKS FROM A CRANE UNIT. VIDEO AND DIGITAL CAMERAS WERE USED TO DOCUMENT DROP.

Drop surface:

Drawing No. T10261 SP01 Rev. A Location: GROVELAND, MA.

Test Period:

Date & time: 07 MAR03 9:42 AM

Specimen Damage:

UPON HITTING THE TEST PAD THE F.C.B.A.'S G-10 SHAFT BROKE AS DESIGNED. UNFORTUNATELY THE F.C.B.A.'S S.S. HOUSING ALSO CAME IN CONTACT WITH THE ~~SELECTOR~~ ROCK SLIDE, FORCING IT THROUGH THE SELECTOR RING.

Post test assessment:

IF THE REAR MOST COMPONENT (F.C.B.A.) WAS ALSO MADE OF G-10 MATERIAL, THAN THERE WOULD BE A CHANCE OF THE F.C.B.A. WOULD PASS THE TEST.

Recorded by:	Date: 14 MAR03
Witnessed by:	Date: 17 MAR03
Regulatory reviewed by:	Date: 18 Mar03
Q.A. reviewed by: J.B. Beauchamp	Date: 19 March 03

Puncture Test
10CRF71

Test Specimen:

Drawing No. 88017XLS / TP125A Rev. A Serial Number: 12

Test weight 49 LBS. Scale Used FWC DWM IV
CAL. DATE 28 MAY 03

Test Setup:

Set up per: 10CR71 (71.73(3)) puncture test procedure and assessed configuration.

Pictures: N/A

Notes (assessed configuration):

Drop surface:

Drawing No. T10261 SN01 Rev. A Location: GROVELAND, MA.

Test Period:

Date & time: 07MAR03 10:00 AM

Specimen Damage:

NOT PERFORMED. UNIT FAILED ON FREE DROP TEST. ALL TESTING STOPPED AT THIS TIME.

Post test assessment:

Recorded by:	Date: 14MAR03
Witnessed by:	Date: 17MAR03
Regulatory reviewed by:	Date: 18 MAR 03
Q.A. reviewed by:	Date: 19 MAR 03

Final Test Assessment

Test Specimen:

Serial Number(s): 88017XLS/TP125 S/N 21

Foot Control Button evaluation:

Spring (61lb.): IN GOOD WORKING ORDER
Spring (19lb.): IN GOOD WORKING ORDER
Stainless steel components: IN GOOD WORKING ORDER
F.C.B.A. working condition after Horizontal shock. YES *

Foot Control Button Assembly evaluation:

Is the F.C.B.A. in working condition?

THE ASSEMBLIES G-10 SHAFT BROKE ON IMPACT. THE F.C.B.A. HOUSING CAME IN CONTACT W/THE LOCK SLIDE, FORCING IT THROUGH THE SELECTOR RING

Comments:

* THE G-10 SHAFT WAS REPLACED AND THE ASSEMBLY WORKED FINE.

THE F.C.B.A. FAILED THE 9m FREE DROP. THE PUNCTURE TEST WAS NOT PERFORMED.

Engineering Review by:	Date: 03 APR 03
SME Review by:	Date: 03 APR 03
Regulatory Review by:	Date: 3 Apr 03
Q.A. Review by:	Date: 4 April 03

Final Test Assessment

Test Specimen:

Serial Number(s): 88017XLS

Lock Mount Assembly evaluation:

Aluminum housing: DENTED AND SCRAPED (OK)
Stainless steel insert: NO DAMAGE
Corbin lock: NO DAMAGE
Lock Mount Assembly working condition after Horizontal shock. YES

Lock Mount evaluation:

Is the lock mount assembly in working condition?

THE LOCK MOUNT ASSY. STILL WORKS VERY SMOOTHLY.

Comments:

REFER TO TECHNICAL REPORT #40 FOR ADDITIONAL TEST OF THE LOCK MOUNT ASSY. WHICH ALSO FAVORS THE S.S. INSERT DESIGN.

Engineering Review by:	Date: 02APR03
SME Review by:	Date: 03APR03
Regulatory Review by:	Date: 3 Apr 03
Q.A. Review by:	Date: 4 April 03

Section 10. APPENDIX D – MANUFACTURING RECORDS

AEA TECHNOLOGY
QSA

SPS-E-1724-1Rev1

ROUTE CARD

Part No.: 88017XLS		Rev: B	Page 1 of 1
Desc: 880 DELTA "SIMULATOR" ASSEMBLY			
By: P Butterick 09JAN03		Ckd: R. [illegible] 9 JAN 03	
Safety Class: N/A	WO INDIRECT	Qty: 1	
Serial/Lot Number(s): 21			

OP#	Work Center	Operation	Part#	Rev	Lot or s/n	Reference Document	Tools	By	Date	Comments
010	Assy	Attach jacket	88041-1 88011XLS RIV093	C B A	S/n 21	B88017XLS	T10367 T10324	DA	9 JAN 03	
020	Assy	Attach front plate Torque screws ✓	88030 SCR154	C A		B88017XLS	Torque wrench S/n 182	DA	9 JAN 03	
030	Assy	Attach rear plate Torque screws ✓	88020 SCR154	5 A	S/n 1146	B88017XLS	Torque wrench S/n 182	DA	9 JAN 03	DA 7 FEB 03
040	Assy	Attach F.C.B.A.	88070	2		B88070		DA	9 JAN 03	
050	Assy	Label	88042-5 RIV003			B88017XLS		DA	9 JAN 03	
060	QC	Final inspection			Pass Fail X RE-INSPECT Acceptable DW 7 Feb 03	B88017XLS		DW	7 Feb 03	

AEA TECHNOLOGY
QSA

ROUTE CARD

SPS-E-1724-1Rev1

Part No.: 88017XLS	Rev: A	Page 1 of 1	
Desc: 880 DELTA "SIMULATOR" ASSEMBLY			
By: 17 DEC 01	Ckd: 17 DEC 01		
Safety Class: N/A	WO: INDIRECT	Qty: 1	
Serial/Lot Number(s): 21			

OP#	Work Center	Operation	Part#	Rev	Lot or s/n	Reference Document	Tools	By	Date	Comments
010	Assy	Attach jacket	88041-1 88011XLS RIV093	C A A	S/n 21	B88017XLS	T10367 T10324	DAL	17 DEC 01	
020	Assy	Attach front plate Torque screws ✓	88030 SCR154	B A		B88017XLS	Torque wrench S/n 182	DAL	17 DEC 01	
030	Assy	Attach rear plate Torque screws ✓	88020 SCR154	B A	S/n 1146	B88017XLS	Torque wrench S/n 182	DAL	17 DEC 01	
040	Engr	Attach F.C.B.A.	88070	2		B88070		DAL	17 DEC 01	DAL 14 NOV 02
050	QC	Final inspection			Pass X Fail	B88017XLS	DW	DW	20 DEC 01	

AEATECHNOLOGY QSA

(DW) 17 JAN02 125 A PAB 17JAN02

Device for Test Plan ~~119~~

Inspection Instruction And Record	Originator/Date 18DEC01	Rev A	Part No. 88017XLS	Supplier
	QA Approval/Date 18DEC01	CM C	PIL N/A	Eng. Approval/Date 18DEC01

Item Description: Model 880 Delta Simulator Assembly

Characteristics	Tolerance	MTE	AQL	1	2	3	4	5	6	7	8	9
General Visual	N/A	N/A	C / 100%	0 / 1								
Verify all Items Present Per Drawing	N/A	N/A	C / 100%	0 / 1								
Verify Assembled per Drawing	N/A	N/A	C / 100%	0 / 1								
Total Weight 50 Lbs Max.	N/A	Scale	C / 100%	0 / 1								
Funtional Test With Dummy Source	N/A	N/A	C / 100%	0 / 1								
Verify Foot Control Button Assy Pt. # 88070 Installed	N/A	N/A	C / 100%	0 / 1								
Verify Foot Control Button Assy Functions Properly	N/A	N/A	C / 100%	0 / 1								
Less Name Plate & Source ID Tag	N/A	N/A	C / 100%	0 / 1								

Comments		1	2	3	4	5	6	7	8	9
	PO / WO #	INDIRECT								
	Traveler / QCL #	N / A								
	Lot / Serial #	21								
	Lot Qty.	1								
	Qty. Rej / NCR	0 / NA								
	Qty. Acc.	1								
	Insp / Date	(DW) / 20 DEC01								

AEA TECHNOLOGY QSA	ROUTE CARD	Part No.: 88011XLS	Rev: B A	Page 1 of 1
		Desc: Body Weldment "Delta Simulator"		
		By: 12 Dec 01	Ckd: R. 12 DEC 01	
		Safety Class: ~~N/A~~ 17 JAN 02	WO: INDIRECT	Qty: 1
SPS-E-1724-3Rev1		Serial/Lot Number(s): 21		

Op #	Work Center	Operation	Part #	Lot or S/N	Reference Documents/Rev	Tools	by	Date	Comments
010	Assy	Stamp S/N	88010	S/N 21	B88011XLS		DAL	12 DEC 01	
020	Assy	Assemble shields & End plates	88052-1 88010 88003	Lot# 01171-1	B88011XLS		RWR	12 Dec 01	
030	Weld	Tack Weld	88011XLS WEL003	Lot# 01026-2	B88011XLS	T10318 S/N 02	E. P.	12 Dec 01	
040	Weld	Weld	88011XLS WEL003	Lot# 01026-2	B88011XLS		E. P.	12 Dec 01	
050	QC	Inspect weld (VT)		Pass X Fail	B88011XLS			14 Dec 01	
060	Assy	Foam	FOM001		B88011XLS WI-P1712 SPS-P1712-1	T10329 S/N N4	D F W	15 DEC 01	
070	~~Assy~~ QC	Inspect			B88011XLS			17 Dec 01	

Inspection Instruction And Record	Originator/Date	Rev B	Part No. 88011XLS	Supplier
	QA Approval/Date 17 DEC 01	CM C	PIL 3	Eng. Approval/Date 18 DEC 01

Item Description: Body Weldment Delta Simulator

Characteristics	Tolerance	MTE	AQL	1	2	3	4	5	6	7	8	9
General Visual	N/A	N/A	MJ / 1.0	0 / 1								
Verify Assembled per Drawings Route Card Verification	N/A	N/A	MJ / 1.0	0 / 1								
1.75	+ .02 - .08	Micro Hite	MJ / 1.0	0 / 1								
8.5	+ / - .1	Micro Hite	MJ / 1.0	0 / 1								
Welded Per Dwg.	N/A	N/A	MJ / 1.0	0 / 1								
Stamp Serial # per Dwg.	N/A	N/A	MJ / 1.0	0 / 1								

Comments		1	2	3	4	5	6	7	8	9
	PO / WO #	INDIRECT								
	Traveler / QCL #	N / A								
	Lot / Serial #	21								
	Lot Qty.	1								
	Qty. Rej / NCR	0 / NA								
	Qty. Acc.	1								
	Insp / Date	DW / 17 DEC 01								

AEA TECHNOLOGY QSA

FIRST ARTICLE REPORT
Form F-Q1807-2

Supplier: MACHINE SHOP		Part No.: 88022-1	P.O. /W.O.
Item Description: LOCK MOUNT INSERT		Qty. 2	Qty./Insp. 2
Drawing No. 88022-1		Rev. 3	CM: B
Inspected by: Dave [illegible]		Date: 18 Dec 02	Lot/Ser.#
Drawing Dimension	Actual Dimension	M&TE Used	SN & Cal. Due Date
SLOT .188	.188-.189	Caliper	#305 10-4-03
.562	.565 - .560	↓	" "
.755 ± .003	.756 - .758	Bore Gage	#111 4-5-03
.875 +.000 -.005	.875	Caliper	#305 10-4-03
.165	.164 - .166	MICRO HITE	271 4-2-03
.125 Ø THRU	.125	Pin gage	292 4-2-03
.35	.345 / .350	MICRO HITE	#270 4-2-03
.89	.892 / .896	↓ ↓	↓ ↓
.93	.933	↓ ↓	↓ ↓
.16	.158 .160	Caliper	#305 10-4-03
.31 Rad	.31 Rad	Pin Gage	293 4-2-03
300 Series S.S.	S.S	Usual / magnet	NA
	Results:	Accepted ✓	Rejected

Comments:

QC Forward this inspection report along with the samples to Engineering for review and approval. Retain a copy of the report in the file until approved.

Approved ☒ **Not Approved** ☐

[signature] **Date:** 06 JAN 03

Engineering

Engineering return approved report to QC for records retention.

QCL# #129730

PROTOTYPE

PROCESS IN ACCORDANCE WITH ENGINEERING INSTRUCTIONS

ENG BUTTRICK DATE 07OCT02

REVISIONS				
REV.	ERF #	DESCRIPTION	APPROVALS	DATE
3	N/A	PROTOTYPE RELEASE	SEE TITLE	BLOCK

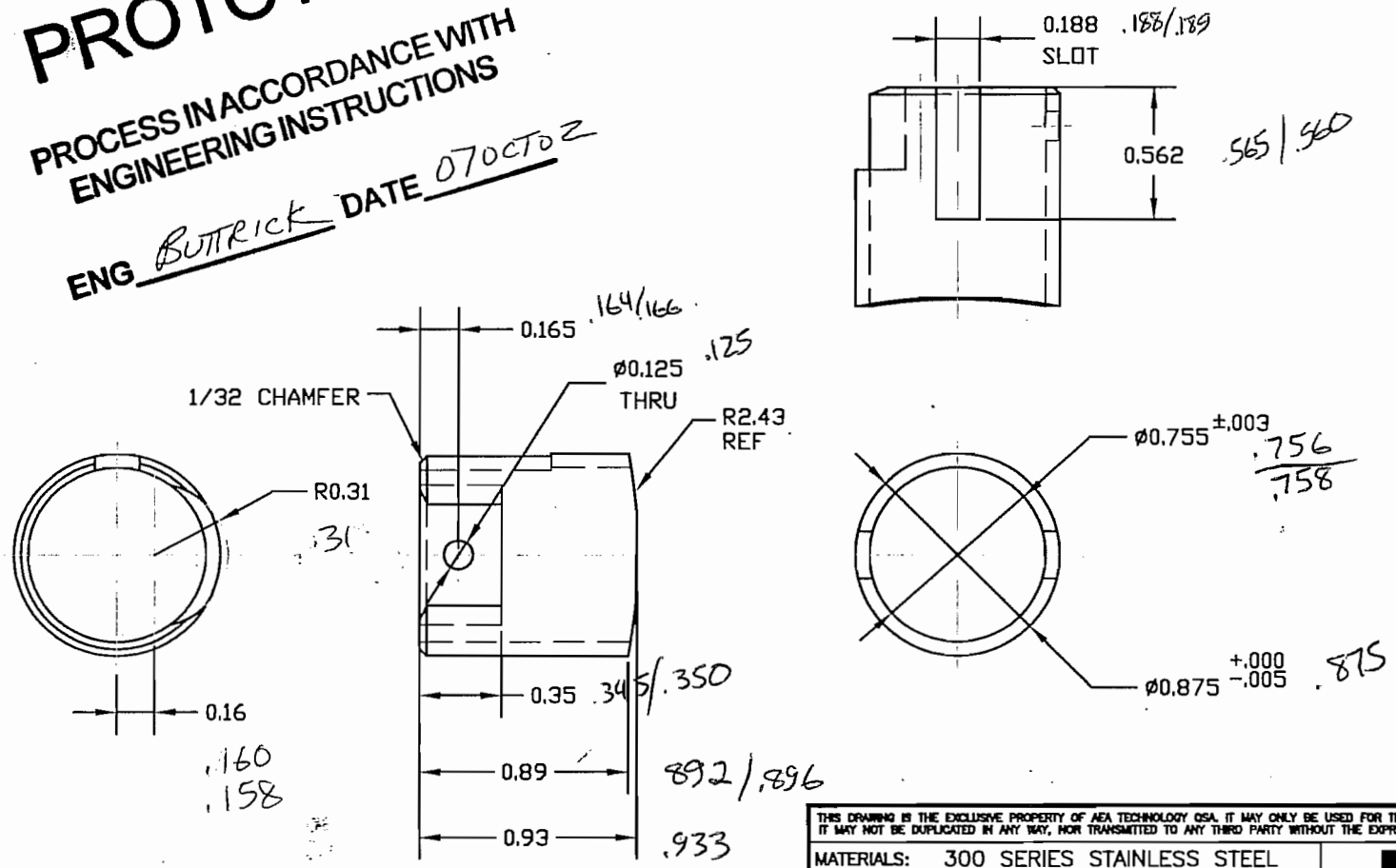

THIS DRAWING IS THE EXCLUSIVE PROPERTY OF AEA TECHNOLOGY QSA. IT MAY ONLY BE USED FOR THE PURPOSE FOR WHICH IT WAS ISSUED. IT MAY NOT BE DUPLICATED IN ANY WAY, NOR TRANSMITTED TO ANY THIRD PARTY WITHOUT THE EXPRESS PERMISSION OF AEA TECHNOLOGY QSA.

MATERIALS: 300 SERIES STAINLESS STEEL

PROTECTIVE FINISH: NONE

UNLESS OTHERWISE SPECIFIED;
1. DIMENSIONS ARE IN INCHES.
2. MIN SURFACE TEXTURE: 63
3. DIMENSIONS APPLY AFTER FINISH.
4. REMOVE BURRS AND SHARP EDGES.
5. DO NOT SCALE DRAWING.
6. TOLERANCES: FRACTIONS ± 1/64, ANGLES ± 1°, .X ± 0.1, .XX ± 0.01, .XXX ± 0.005

DRAWN		
CHECKED	NA	
APPR.		

THIRD ANGLE PROJECTION

QUALITY CLASS B

AEA TECHNOLOGY QSA
40 NORTH AVE, BURLINGTON, MA 01803

TITLE: LOCK MOUNT S.S. INSERT

SIZE B | DWG. NO. 88022-1 | REV 3

SCALE: 1:1 | SHEET 1 OF 1

AEA TECHNOLOGY QSA

FIRST ARTICLE REPORT
Form F-Q1807-2

Supplier: A.E.A MACHINE Shop	Part No.: 88070-4	P.O. /W.O: Indirect
Item Description: Foot Control shaft	Qty. 10	Qty./Insp. 5
Drawing No.	Rev. 3	CM: B
Inspected by: Norgie Benitez	Date: 01 OCT 02	Lot/Ser.# N/A

Drawing Dimension	Actual Dimension	M&TE Used	SN & Cal. Due Date
General Visual	Conform	Visual	N/A
1.500	1.500	CALIPER	340 - 8/8/03
R.030	.030	RADIUS GAGE	QC-10-4/1/03
Φ.490	.490	Caliper	340 - 8/8/03
.60°	.60°	OPTICAL COMP.	340-8/8/03
.437	.437	Caliper	
.500	.500		
.156	.156		
R.180 (2 PLS)	R.187	Radius Gage	QC-10-4/1/03
.115	.115	Caliper	340 - 8/8-03
.230	.230	Caliper	340 - 8/8-03
.360	.360	Caliper	340 - 8/8-03

Results:	Accepted		Rejected	X

Comments:

QC Forward this inspection report along with the samples to Engineering for review and approval. Retain a copy of the report in the file until approved.

Approved ☒ **Not Approved** ☐

Engineering **Date:** 03 OCT 02

Engineering return approved report to QC for records retention.

REVISIONS				
REV.	ECO/TGR #	DESCRIPTION	APPROVALS	DATE
A	2871	INITIAL RELEASE	SEE TITLE	BLOCK
B	2877	ADDED CENTER MARK NOTE	PAB/M.T.	20APR01
C	2892	WAS .500,NOW .437 & WAS 1.38,NOW 1.500		
3	N/A	PROTOTYPE PART		

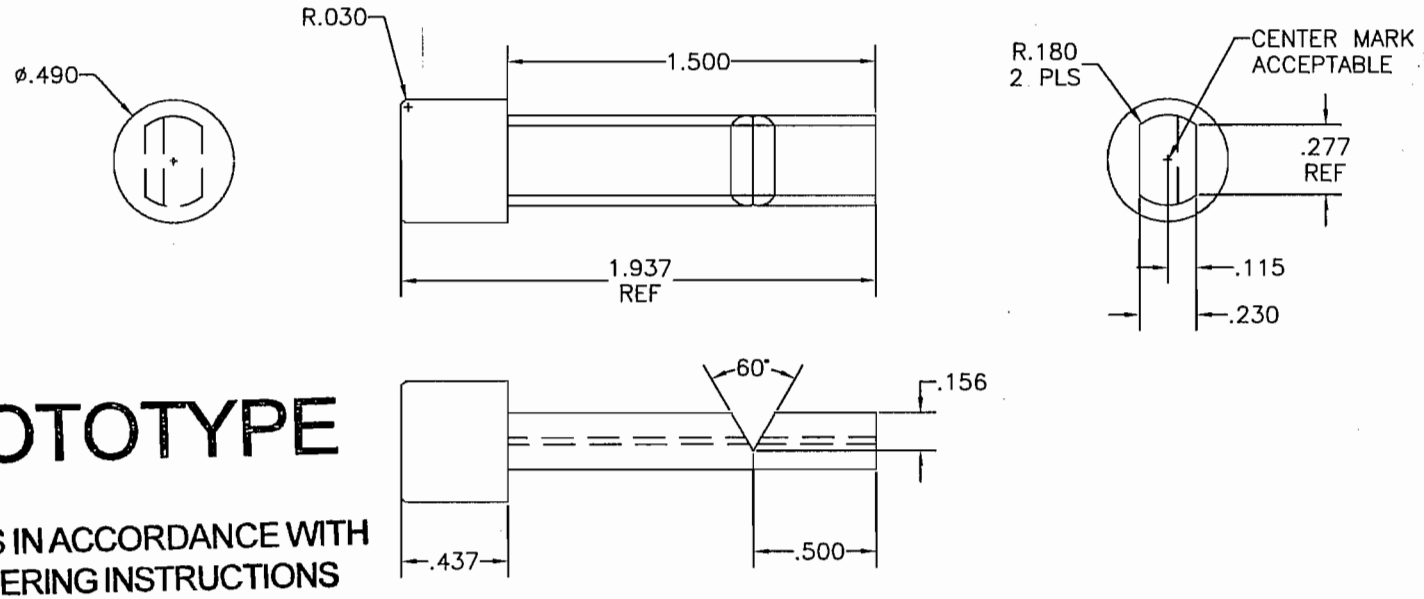

PROTOTYPE

PROCESS IN ACCORDANCE WITH ENGINEERING INSTRUCTIONS

ENG BUTTRICK DATE 20SEP02

"RETURN PARTS TO ENGINEERING"

THIS DRAWING IS THE EXCLUSIVE PROPERTY OF AEA TECHNOLOGY QSA. IT MAY ONLY BE USED FOR THE PURPOSE FOR WHICH IT WAS ISSUED. IT MAY NOT BE DUPLICATED IN ANY WAY, NOR TRANSMITTED TO ANY THIRD PARTY WITHOUT THE EXPRESS PERMISSION OF AEA TECHNOLOGY QSA.

MATERIALS: G-10 FIBERGLASS

PROTECTIVE FINISH: N/A

UNLESS OTHERWISE SPECIFIED;
1. DIMENSIONS ARE IN INCHES.
2. MIN SURFACE TEXTURE: 63
3. DIMENSIONS APPLY AFTER FINISH.
4. REMOVE BURRS AND SHARP EDGES.
5. DO NOT SCALE DRAWING.
6. TOLERANCES: .X ± 0.1, FRACTIONS ± 1/64, .XX ± 0.01, ANGLES ± 1°, .XXX ± 0.005

DRAWN	P.BUTTRICK	10APR01
CHECKED	M.TREMBLAY	10APR01
APPR.	M.TREMBLAY	10APR01

THIRD ANGLE PROJECTION

SAFETY CLASS B

AEA TECHNOLOGY QSA
40 NORTH AVE, BURLINGTON, MA 01803

TITLE: FOOT CONTROL SHAFT

SIZE B | DWG. NO. 88070-4 | REV 3

SCALE: 1:1 | SHEET 1 OF 1

Section 11. APPENDIX E – TECHNICAL REPORTS

AEA TECHNOLOGY QSA, Inc.
Engineering Department
Technical Report

Title: 88022 Lock Mount "Environmental Test" evaluation

Prepared by: _____ Date: 11 JUN 02
Checked by: _____ Date: 11 JUN 02
Engineering Approval: _____ Date: 11 JUN 02

1.0 PURPOSE

The purpose of the report is to set forth results on testing of the #88022 Lock Mount assembly, then propose and test new designs as to arrive at one that will not experience operating problems in the future.

2.0 SCOPE

We have received customer concerns (see CR 151, CR177) about the aluminum #88022 lock mount and its brass #66001-11 lock plunger sticking (not unlocking) after being subjected to several days of marine environment and dark room exposure. Other concerns of mud and water submersion to the lock mount assembly during "normal" daily operations have been made in reference to faulty lock operations. Moreover, corrosion between the aluminum lock mount and the brass lock plunger will be evaluated when tested.

3.0 METHODS

The test method employed was performed on three different designs. The first design is the part as currently manufactured. The second design has a stainless steel sleeve inserted into the existing design's enlarged hole. The third, a rubber o-ring design incorporated into the existing design. Two complete assemblies of each of the three different configurations were used in the testing. The test was as follows.

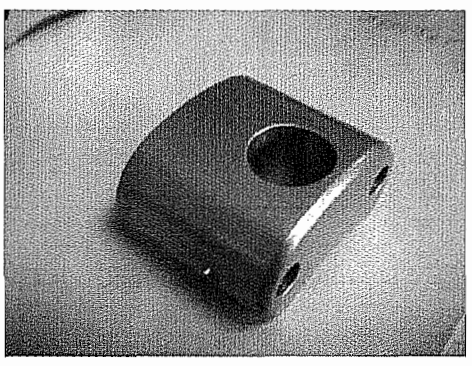

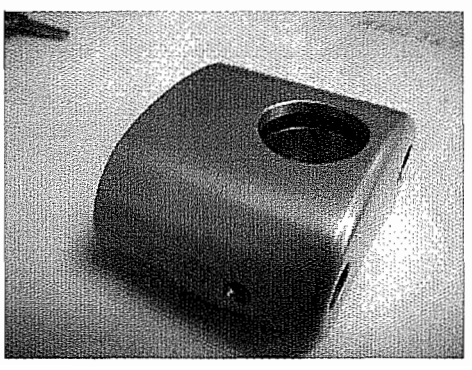

Two different tests were conducted:

a. One each of the three different designs were submerged into a heavy salt water mixture for a period of 3 days. Each day the solution was stirred, as to fully coat the samples. On the fourth day the test samples were set on a table at ambient temperature to dry for a period of four hours. The samples were then placed in an oven and were subjected to a temperature of approximately 140 degrees Fahrenheit for a period of 4 hours.

The above process was to simulate exposure to a marine environment. The test samples did have some minor corrosion occur between the brass lock plunger and the aluminum housing. The brass lock plunger also had some discoloring around the key area but had little effect in operation.

See pictures below.....

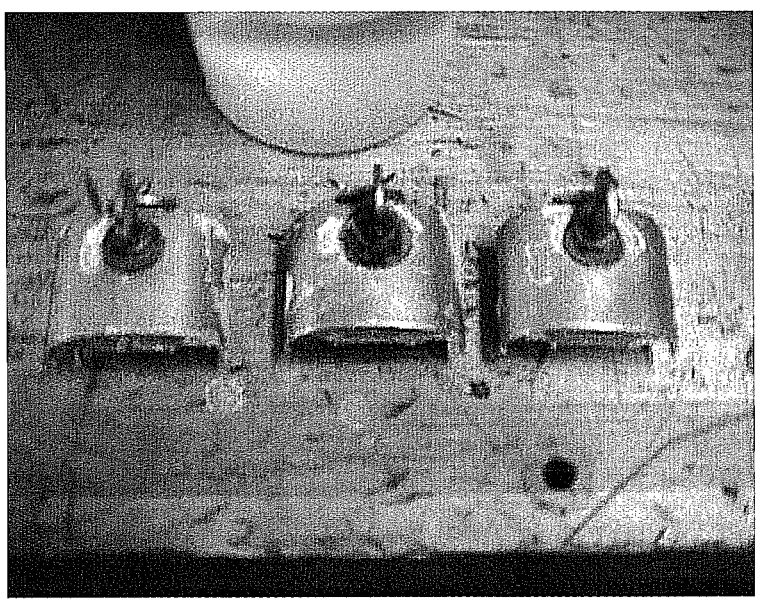

b. One each of the three different designs were submerged into a thick mud mixture for a period of 3 days. Each day the solution was stirred, as to fully coat the samples. On the fourth day the test samples were set on a table at ambient temperature to dry for a period of four hours. The samples were then placed in an oven and were subjected to a temperature of approximately 140 degrees Fahrenheit for a period of 4 hours.

The above process was to simulate exposure to dirt and mud for long periods of time. A drying cycle was introduced as a normal occurrence during storage or non-use.

See pictures below.....

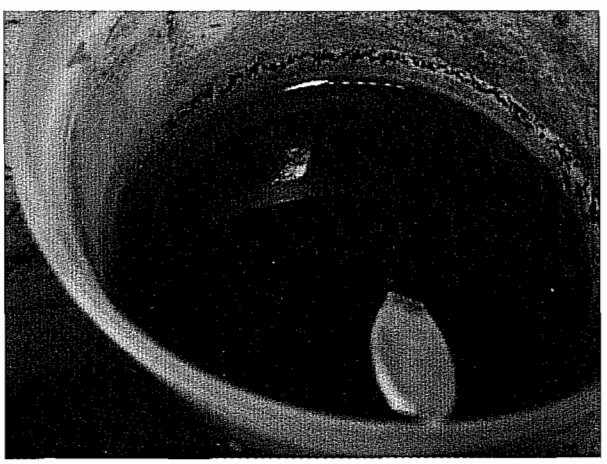

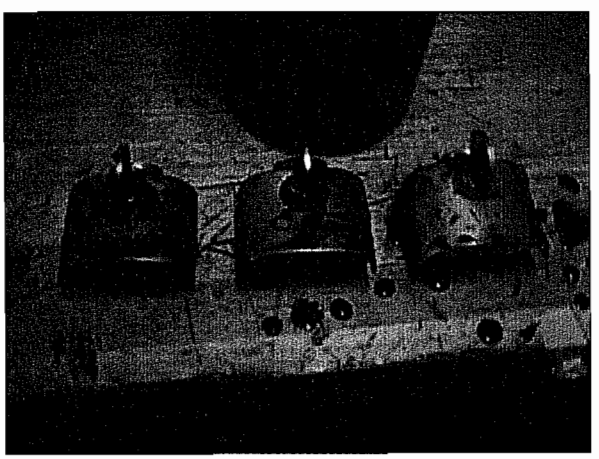

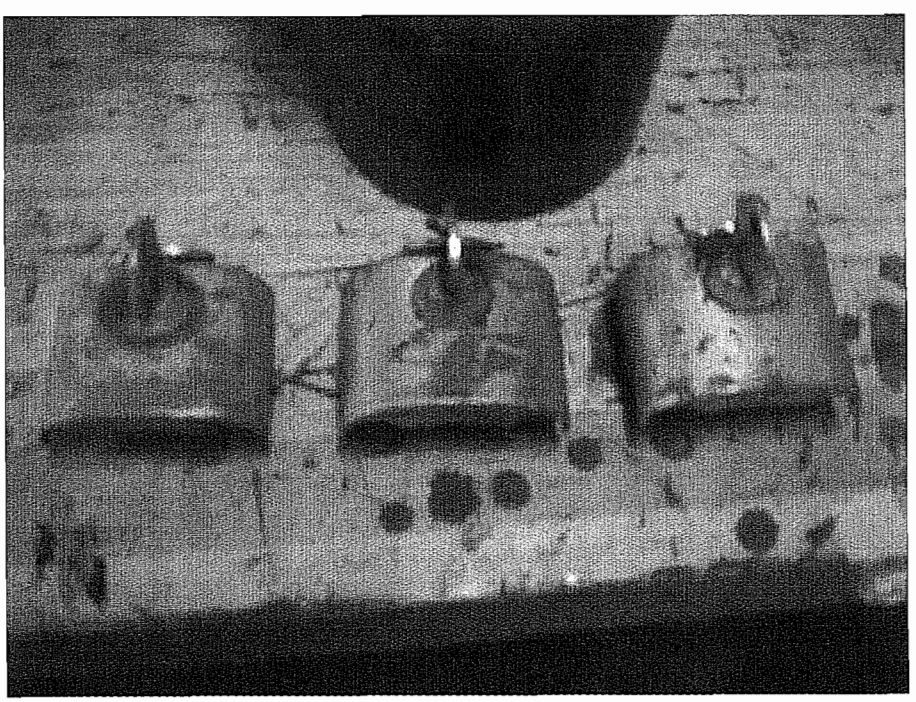

4.0 INITIAL INPUT

The first sample, which is our normal production part was tested without any modifications. It was assembled by applying a petroleum (AEROSHELL Grease 7) lubricant to the perimeter of the hole on the aluminum lock mount. The brass plunger was than inserted into the hole and secured in place by a 6-32 hex slot machine screw through the side of the assembly.

The second sample, #88022 (Rev. 6) lock mount had the 0.858 diameter drill hole opened to .880 +.000/-.003 x .930 deep. A stainless steel sleeve #88022-1 (Rev. 1) with an outside diameter of 0.875 +.000/-.005 was bonded with a 5 minute epoxy into the .880 hole. The #66001-11 lock plunger was than inserted into the lubricated (AEROSHELL) stainless steel sleeve and secured in place with a 6-32 machine screw.

The third sample, #88022 (Rev. 5) lock mount was modified to accept an o-ring (Green Rubber #AS568-210) approximately 1/8" from the top edge of the .758 diameter hole. Upon insertion of the o-ring the 0.758 diameter hole was greased with the lubricant (AEROSHELL) and the brass lock plunger was secured in place as above.

See attached drawings for more information.

5.0 RESULTS / DISCUSSION

5.1 The parts were first evaluated (not cleaned) while still warm from the oven.

All the salt covered test sample's lock plungers were hard to turn with the key and did not actuate properly. The Stainless steel sleeve sample did however work the best after only a few iterations. The normal production sample was very stiff while turning the key and did not actuate fully. The o-ring sample did not turn or actuate at all.

The mud covered test sample's lock plungers turned easily with the key but did not actuate fully on the current design and the o-ring designed test sample. The stainless steel sample however actuated fully without any effort.

5.2 The parts were then cleaned (washed with water) while turning the key and actuating the lock plunger.

The salt covered stainless steel insert test sample and the o-ring test sample worked well after cleaning. The normal production sample however, never worked properly even after being rinsed thoroughly with water. The production sample was then disassembled, re-cleaned, and reassembled. At which point it worked as designed.

The mud samples were evaluated to find that the regular production sample's key turned fine but did not actuate completely. The o-ring design worked well. The o-ring kept out most of the mud and water enabling it to function properly. The sample with the stainless steel insert worked best. The key turned easily and the lock plunger actuated smoothly.

6.0 REFERENCES

Not applicable.

7.0 CONCLUSION

The overall conclusion is that the #88022 lock mount assembly should be kept clean as possible during normal operation. After use, the radiographic unit and it's lock mount assembly should be washed to remove any dirt, salt, and grime to insure proper functioning.

The conclusion from testing different designs is that the #88026 lock mount should be modified from it's original design to include the #88002-1 stainless steel insert. The stainless steel insert was quoted at approximately $5.00 each and will be incorporated at the time of assembly. The aluminum lock mount presently is being produced as a finished casting. The light weight aluminum design is both desirable and is a functional alternative to an all solid stainless steel design.

Section 12. APPENDIX F – ORIGINAL TEST PLAN

TEST PLAN 125 (Rev. B)

Model 880 Type B Container

With 88070 Foot Button Assembly

And 88022 Lock Mount Modification

10CFR71, ISO 3999-1

Transport Conditions

TABLE OF CONTENTS

1.0 PURPOSE 3

2.0 PRODUCT DESIGN DESCRIPTION 4

3.0 FAILURES OF INTEREST 5

4.0 TEST CONDITIONS AND ORIENTATIONS 6

5.0 PASS AND FAIL CRITERIA 7

6.0 TEST SPECIMEN 8

7.0 TESTING SAFETY AND WASTE DISPOSAL 9

8.0 TEST PROCEDURES 10

9.0 TEST WORKSHEETS 15

10.0 APPENDIX: 10CFR71, ISO 3999-1, TECH. REPORT #40 21

1.0 Purpose

The purpose of these tests is to assess the Model 880 transport container with the addition of the #88070 foot control button assembly. With the addition of these components and the modification of the #88022 lock mount, they will not adversely affect the packages ability as a "Type B" transport container.

The tests will be conducted and witnessed by at least one Engineer (the originator), one Regulatory, and one Quality person. The results of the test will be written in a test report and distributed through the engineering, quality, and regulatory departments for review.

We will test to 10CFR71 regulations for 71.73(1) *free drop*, 71.73(3) *puncture*, and 71.71(10) *penetration*. These tests will follow a random order except that the 71.73(3) puncture test will follow the 71.73(1) free drop test. Also, testing will be performed according to ISO 3999-1 regulations for 6.4.6.1 *horizontal shock.*

This test is a revision to Test Plan 125A. In this test plan, AEA Technology QSA will revert back to the original test plan (TP125) for it's #88070 component design with the following exception. The #88070-4 Shaft which was made of 304 stainless steel will be manufactured from phenolic (G-10 fiberglass) rod stock.

In reference to TP125A, the test failed when the 88070-4 Shaft made impact with the 88024 Titanium lock slide, pushing it through the 88026 Selector ring causing a failure. By manufacturing the Shaft out of G-10 material it would fail first before any damage could occur to the lock slide or the selector ring. See drawing #88070-4 (Rev. 3) for details of the improved design.

Testing not performed under this test (and necessary to demonstrate compliance with 10CFR71, ISO 3999-1, 49CFR and IAEA ~~TR-S-1~~) will be addressed in an assessment located in the final test report. TS-R-1

LAP 23 oct 02

2.0 Product Design Description

The Model 880 "Delta" source projector, drawing #TP125A (weighted dummy unit) consists of the following components:

- 5" Dia. stainless steel body weldment with a "lead core" containing an S-tube.
- Stainless steel front and rear plate assemblies (with modified lock mount).
- #88041 Polyurethane jacket.
- #88070 foot control button assembly.

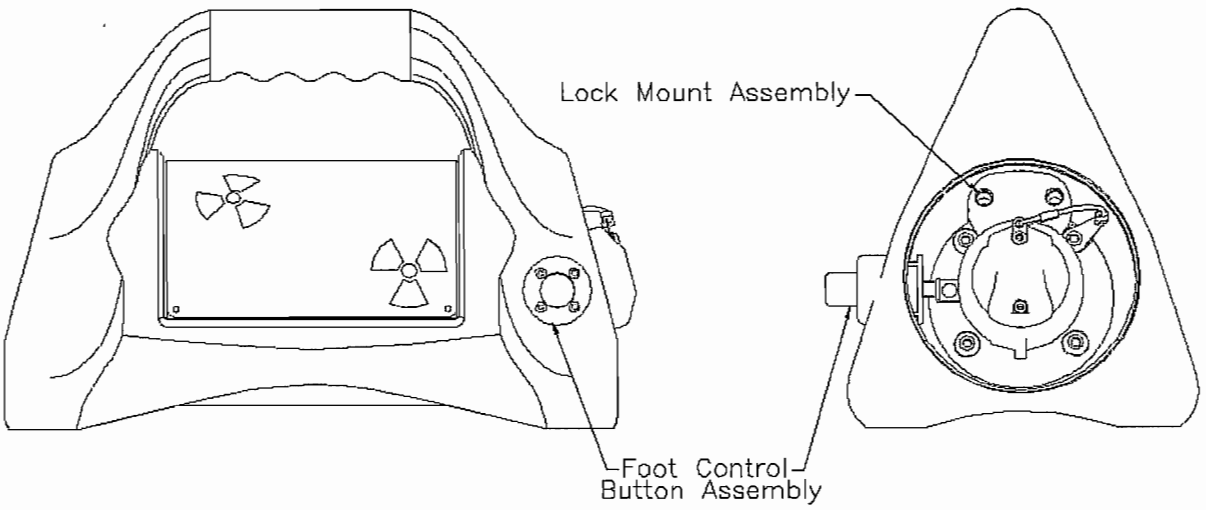

3.0 Failures of Interest

3.1 Foot Control Button Assembly

If the lock slide were to be forced from it's locked position, the source wire could become free to float inside the unit.

The drop test will show that the compressive load being transmitted through the 88070 foot control button assembly will not damage the 88024 lock slide located inside the 88020 rear plate assembly.

3.2 Lock Mount

If the aluminum lock mount receives a blow which damages this component and prevents the locking mechanism from actuating properly then the operator might be unable to use the radiographic camera as specified in the operations manual.

The ISO 3999-1 (6.4.6.1) horizontal shock test will show that with the addition of a stainless steel insert, that this will aid in better structural integrity to the lock mount assembly. See drawing 88022-1 for insert information.

Because the lock mount is designed not to extend beyond the surface of the camera body, the ISO 3999-1 (6.4.2) lock-breaking test, 10CFR 71 (71.73.1) free drop and (71.73.3) puncture test would not be relevant tests therefore will not performed.

Moreover, the ISO 3999-1 horizontal shock test is more severe than the 10CFR71 (71.71.10) penetration test. Because of this, the penetration test will not be performed.

4.0 Test Conditions and Orientations

The Foot Control Button Assembly (F.C.B.A.) was designed to thrust the lock slide into it's active position during operation. The F.C.B.A. was also designed to bottom out when the lock slide was fully actuated. With the new design (phenolic) of the lock slide, the force from actuating the F.C.B.A. cannot be translated directly to the lock slide.

4.1 Free Drop Test 3

The 880 radiographic unit will be oriented so that the F.C.B.A. will be facing downward toward the test pad (T10261 SN01) for the 9m (30 ft.) drop test (see section 8.0). This will expose the assembled unit so the F.C.B.A. will receive an impact similar to a slap down effect. See section 3.2 for lock mount testing information.

4.2 Puncture Test 4

According to the Purpose (Section 1.0 paragraph 4) section of this test plan an evaluation will be made before this test is performed. Unless stated in the test report, the following will most likely be performed. The 880 unit will be oriented in a similar angled fashion as above for the 1m (40 in.) drop test. The unit will be dropped onto a test billet (T10119 SN01) so as the F.C.B.A. sustains the full initial impact. See section 3.2 for lock mount testing information.

4.3 Penetration Test 2

The 880 unit will be oriented so as the foot control button assembly will be facing upward while the jacket will be supported on an unyielding surface. The hemispherical end of a vertical steel cylinder (AEA Technology QSA Drawing #BT10129) of 3.2 cm (1.25 in) diameter and 6 kg (13 lbs.) mass will be dropped from a height of 1 m (40 in) onto the surface of the F.C.B.A. See section 3.2 for lock mount testing information.

4.4 Horizontal Shock Test 1

The 880 unit will be oriented so the (1) F.C.B.A. and the (2) Lock Mount will impact the end-face of (T10333 SN01) 50 mm (2 in) diameter steel bar. The criteria is 300 mm (12 in) in length lying horizontally, that is fixed or welded to a rigid mass at least ten times the mass of the 880. The 880 will be suspended from a fixed point so that, when at rest, the F.C.B.A. and Lock Mount just touches the target. The 880 will be moved from its resting position until its center of gravity is 100 mm (4 in) higher than in the resting position and let loose, so that it swings in a pendulum movement against the target. This will be carried out for a total of twenty (20) times.

5.0 Pass and Fail Criteria

A final assessment shall be made upon the completion of the tests to evaluate the specimen's performance against the test requirements and determine a pass or fail judgement. The specimen(s) shall be considered passing the test requirement if the specimen meets the following criteria:

5.1 Foot Control Button Assembly

The lock slide must not be damaged in a way that the source wire assembly becomes free to move.

The radiographic unit must remain operational after the horizontal shock test. This means either with the actuation of the F.C.B.A. or by manual operation of the lock slide mechanism.

5.2 Lock Mount Assembly

The corbin lock mechanism must actuate freely after being subjected to the horizontal shock test. Also the stainless steel insert must stay in position. The Lock Mount and stainless steel insert will be secured in place with a dog point hex set screw. Loctite will also be added to a set screw prior to assembly. Moreover, the set screw in the Lock Mount assembly cannot back out of position after assembly because the Lock Mount seats up against the 88031 Front Plate.

Final assembly configuration will be noted on QC inspection/acceptance forms. The production unit will be assembled to comply with the tested configuration.

6.0 Test Specimen

The test specimen will be a fully weighted dummy "lead core" 880 Delta radiographic camera (reference AEA Technology QSA Drawing No. TP125A). The core will have no depleted uranium, however the lead core will encapsulate a titanium s-tube. The test specimen shall be examined after the test and any defects will be noted.

The test specimen was developed under drawing #88017XLS but stated that the unit was a Safety Class "C". The test unit should be a Safety Class "A" for traceability reasons. Therefore drawing TP125A was developed as a prototype drawing of the test unit with a Safety Class A.

AEA Technology QSA used a lead unit for this test for the soul evaluation of the Mechanical testing of exterior components. Therefore the unit did not need to be profiled.

Lead was also used to replicate the weight of the unit. The lead billet is orientated (center of gravity) in the same location as a DU unit. Moreover, the billet is mechanically attached with the same pins and hardware as a DU unit. Therefore the test unit will react in the same manner as the DU unit.

7.0 Testing Safety and Waste Disposal

Testing Safety

The tests will not be conducted with any radioactive sources. Instead, the testing of the Model 880 unit will use a dummy source wire assembly.

The weight of the testing will require lifting heavy objects. Proper lifting techniques shall be used to prevent injury.

Some tests of this plan may result in heavy falling objects and flying debris. Safety glasses and a safe distance must be used in these cases.

Waste Disposal

The test Model 880 and accessories will be kept and stored for reference until authorization by the engineering and regulatory department to dispose. No radioactive material will be used in the testing so the test specimens do not need to be kept in any special radiation storage areas.

Once approved for disposal by the engineering department and the regulatory department, the entire test units can be disposed of as standard garbage except for the lead shielding. The lead shall be removed from the Model 880 device and kept for the production department to melt down for other applications if applicable. If the unit remains in good condition, the unit will be repaired if necessary and used for future demo purposes.

8.0 Test Procedures

Free Drop Test 9m

1. Prepare test device by placing device into a sling device.
2. Hold test specimen orientated toward impact surface at a height of 9 m (30 ft) from the top of the drop pad surface to the bottom of the test specimen.
3. Drop the test specimen onto the rigid target surface.
4. Examine test specimen and evaluate to test requirements.
5. Record the results of the test.

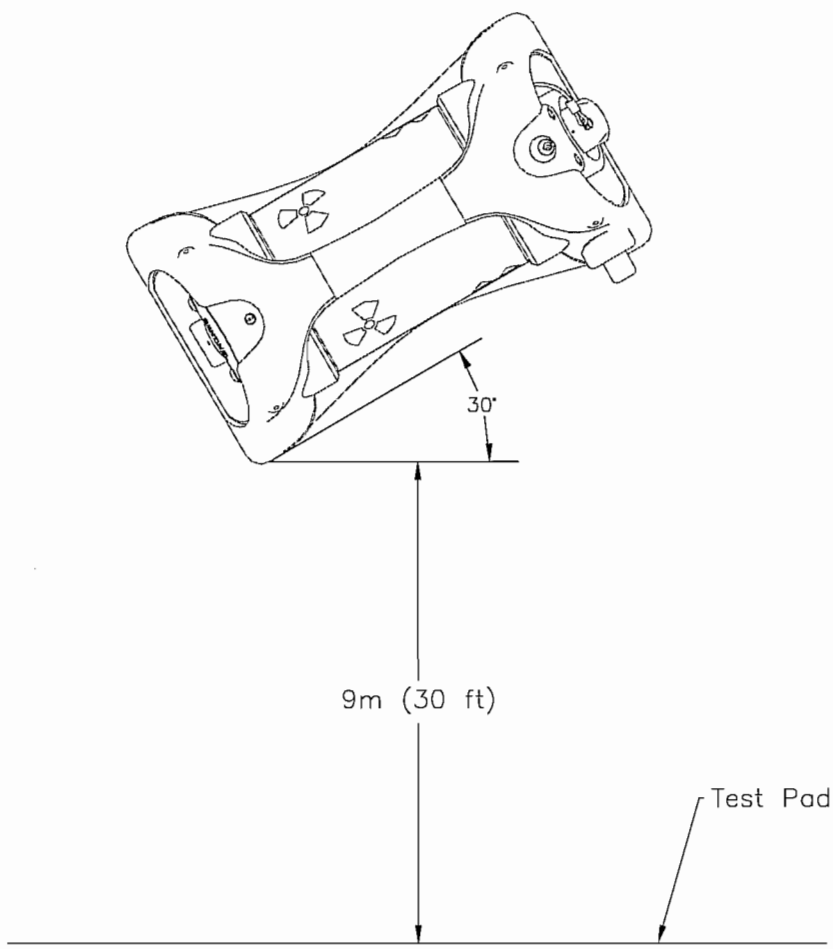

Puncture Test 1m

1. Prepare test device by placing device into sling device.
2. Hold test specimen orientated toward impact surface at a height of 1 m (40 in.) from the top of the test billet surface to the bottom of the test specimen.
3. Drop the test specimen onto the test billet surface.
4. Examine test specimen and evaluate to test requirements.
5. Record the results of the test.

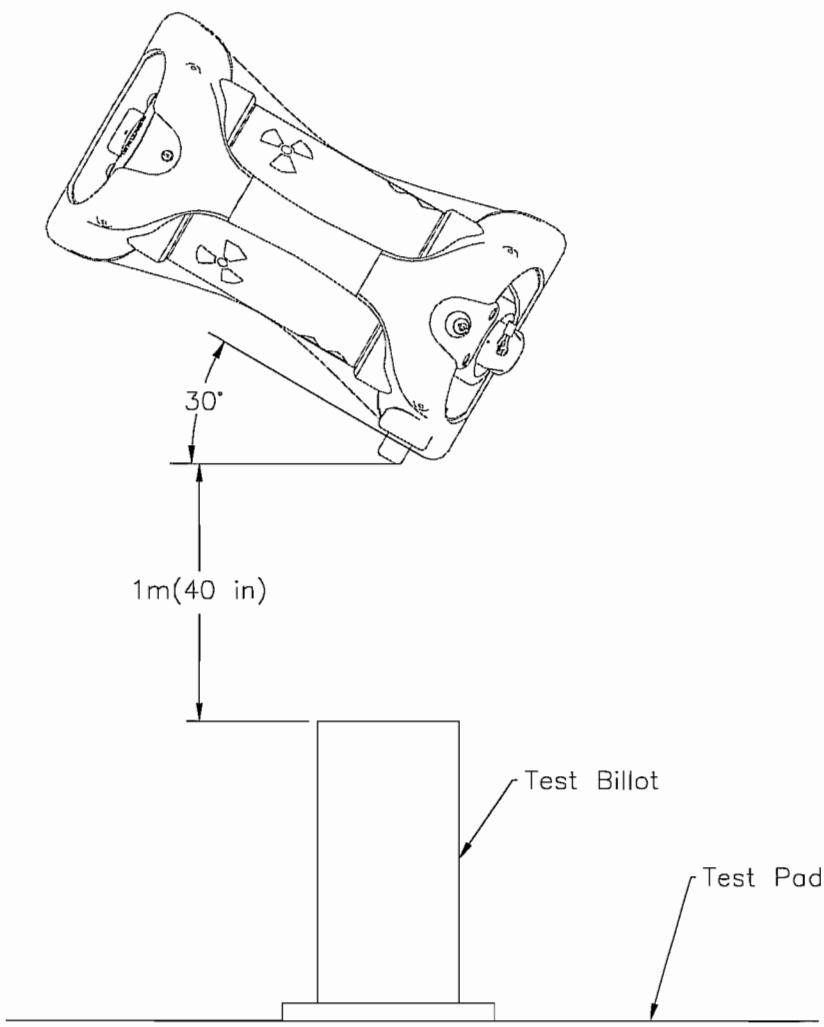

Penetration Test

1. Prepare test device by placing device on an unyielding surface.
2. Orient F.C.B.A. in a vertical position while supporting handle of jacket.
3. Drop steel cylinder (T10129) from a height of 1m (40 in) onto the F.C.B.A.
4. Examine test specimen and evaluate to test requirements.
5. Record the results of the test.

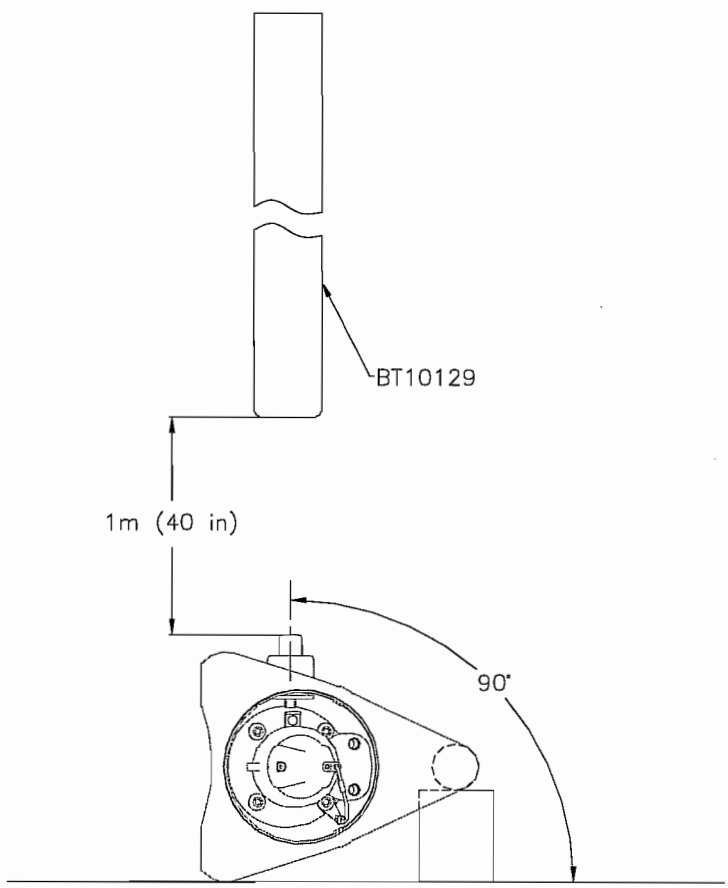

Horizontal Shock Test

1. Prepare test device by placing device into a sling device.
2. Orient by suspending the F.C.B.A. in a horizontal position while touching (T10333) horizontal shock bar.
3. Move the 880 unit until its center of gravity is 100 mm (4 in) higher than its resting position.
4. Let it loose, so that it swings in a pendulum movement against the target for a total of 20 times.
5. Examine test specimen and evaluate to the test requirements.
6. Record the results of the test.

Foot Button Assembly (1)

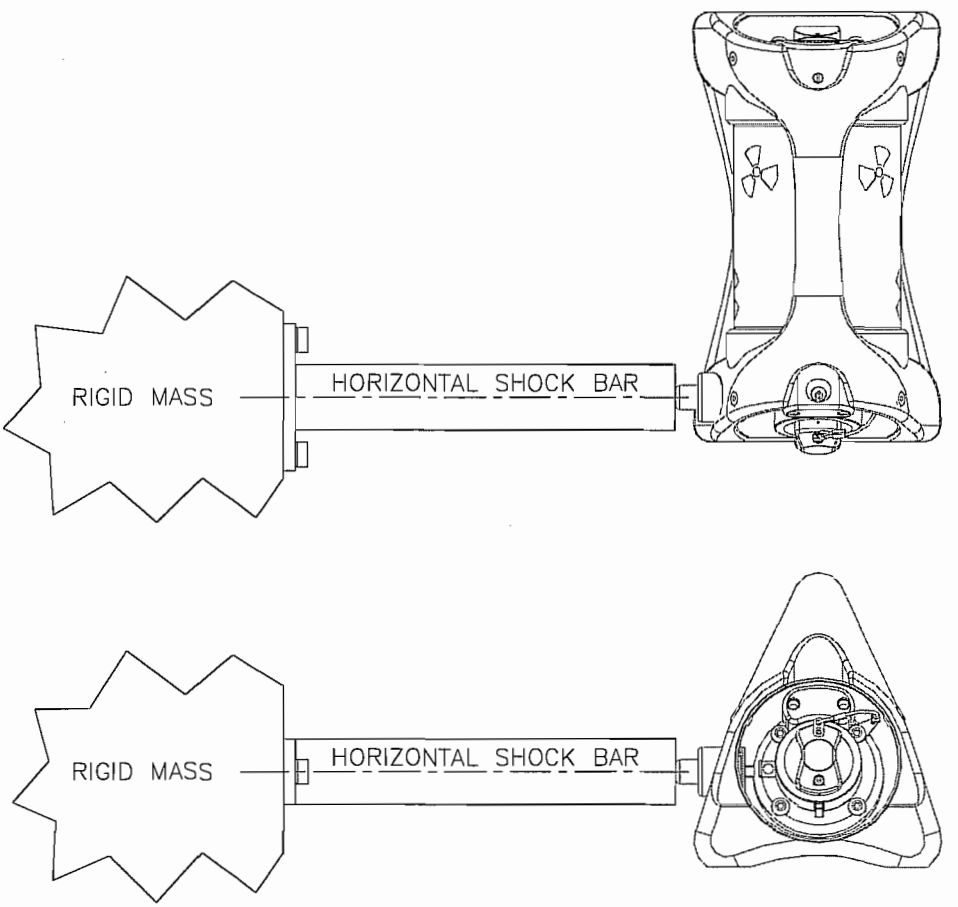

Horizontal Shock Test

1. Prepare test device by placing device into a sling device.
2. Orient by suspending the Lock Mount in a horizontal position while touching (T10333) horizontal shock bar.
3. Move the 880 unit until its center of gravity is 100 mm (4 in) higher than its resting position.
4. Let it loose, so that it swings in a pendulum movement against the target for a total of 20 times.
5. Examine test specimen and evaluate to the test requirements.
6. Record the results of the test.

Lock Mount (2)

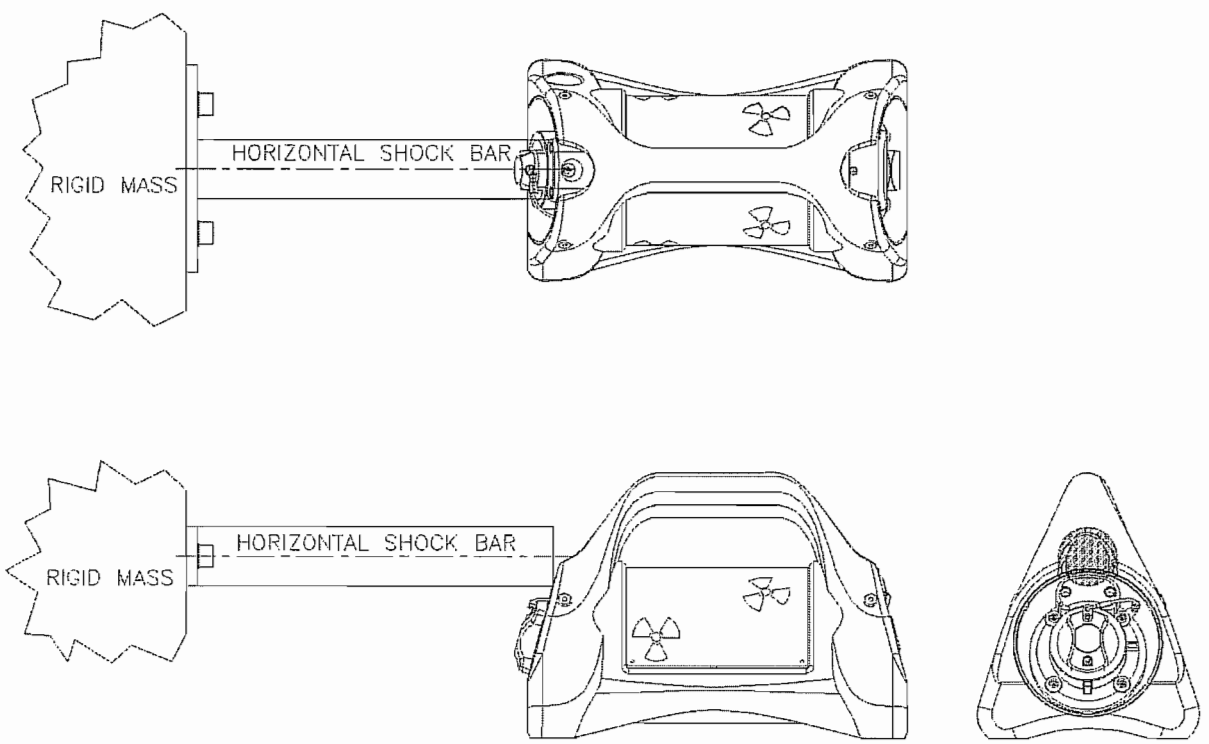

Free Drop Test
10CRF71

Test Specimen:

Drawing No. _____ Rev. _____ Serial Number: _____

Test weight _____ Scale Used _____

Test Setup:

Set up per: 10CFR71 (71.73(1)) free drop test procedure.

Pictures: _____

Notes:

_____

_____

Drop surface:

Drawing No. _____ Rev. _____ Location: _____

Test Period:

Date & time: _____

Specimen Damage:

_____

_____

_____

Recorded by:	Date:
Witnessed by:	Date:
Regulatory reviewed by:	Date:
Q.A. reviewed by:	Date:

Puncture Test
10CRF71

Test Specimen:

Drawing No. _____ Rev. _____ Serial Number: _____

Test weight _____ Scale Used _____

Test Setup:

Set up per: 10CR71 (71.73(3)) puncture test procedure and assessed configuration.

Pictures: _____

Notes (assessed configuration):

_____

_____

Drop surface:

Drawing No. _____ Rev. _____ Location: _____

Test Period:

Date & time: _____

Specimen Damage:

_____

_____

_____

Post test assessment:

_____

_____

Recorded by:	Date:
Witnessed by:	Date:
Regulatory reviewed by:	Date:
Q.A. reviewed by:	Date:

Penetration Test
10CRF71

Test Specimen:

Drawing No. _____ Rev. _____ Serial Number: _____

Test weight _____ Scale Used _____

Test Setup:

Set up per: 10CR71 (71.71(10)) penetration test procedure.

Pictures: _____

Notes:

_____

_____

Drop surface:

Drawing No. _____ Rev. _____ Location: _____

Test Period:

Date & time: _____

Specimen Damage:

_____

_____

_____

Post test assessment:

_____

_____

Recorded by:	Date:
Witnessed by:	Date:

Horizontal Shock Test
ISO 3999-1

Test Specimen:

Drawing No. _____ Rev. _____ Serial Number: _____

Test weight _____ Scale Used _____

Test Setup:

Set up per: ISO 3999-1 (6.4.6.1) horizontal shock test procedure.

Pictures: _____

Notes:

_____

_____

Horizontal Test Bar:

Drawing No. _____ Rev. _____ Location: _____

Test Period:

Date & time: _____

Specimen Damage:

_____

_____

_____

Post test assessment:

_____

_____

Recorded by:	Date:
Witnessed by:	Date:
Regulatory reviewed by:	Date:
Q.A. reviewed by:	Date:

Final Test Assessment

Test Specimen:

Serial Number(s): _____

Foot Control Button evaluation:

Spring (61lb.): _____
Spring (19lb.): _____
Stainless steel components: _____
F.C.B.A. working condition after Horizontal shock. _____

Foot Control Button Assembly evaluation:

Is the F.C.B.A. in working condition?

Comments:

_____
_____
_____
_____
_____
_____
_____
_____
_____
_____
_____
_____
_____

Engineering Review by:	Date:
SME Review by:	Date:
Regulatory Review by:	Date:
Q.A. Review by:	Date:

Final Test Assessment

Test Specimen:

Serial Number(s): _____

Lock Mount Assembly evaluation:

Aluminum housing: _____
Stainless steel insert: _____
Corbin lock: _____
Lock Mount Assembly working condition after Horizontal shock. _____

Lock Mount evaluation:

Is the lock mount assembly in working condition?

Comments:

_____
_____
_____
_____
_____
_____
_____
_____
_____
_____
_____
_____
_____

Engineering Review by:	Date:
SME Review by:	Date:
Regulatory Review by:	Date:
Q.A. Review by:	Date:

10.0 Appendix: 10CFR71, ISO 3999-1, Technical Report #40, and F.C.B.A. Instruction Sheet.

2.12.7 Test Plan Report 74 (Feb 1998)

SENTINEL

TEST PLAN NO. 74

TEST PLAN COVER SHEET

TEST TITLE: Model 660 Hypothetical Accident Condition Tests

PRODUCT MODEL: 660 (with stainless steel screws)

ORIGINATED BY: S. Glenn	DATE: 17 DEC 1997

TEST PLAN REVIEW

ENGINEERING APPROVAL:	DATE: 17 Dec 97
QUALITY ASSURANCE APPROVAL: K Maffey	DATE: 17 Dec 97
REGULATORY AFFAIRS APPROVAL: C. Longman	DATE: 17 Dec 97

COMMENTS:

TEST RESULTS REVIEW

ENGINEERING APPROVAL:	DATE: 18 Feb 98
QUALITY ASSURANCE APPROVAL: K Maffey Changes - CMR for KMA	DATE: 17 Feb 98 18 Feb 98
REGULATORY AFFAIRS APPROVAL: C. Longman	DATE: 18 Feb 98

Amersham QSA

Test Plan #74 Results

This document describes the results of package design tests conducted for Hypothetical Accident Conditions (10 CFR 71.73) by Amersham to determine whether Model 660 Series projectors meet NRC requirements for Type B(U) packages.

The Model 660 Series includes the following models: 660, 660A, 660B, 660E, 660AE, and 660BE. Reference Certificate of Compliance 9033.

The tests were conducted in accordance with Amersham Test Plan #74 (dated December 16, 1997). The test plan also covers the criteria stated in IAEA, Safety Series 6 (1985, as amended 1990).

The purpose of the plan was to evaluate the performance of the Model 660 Series projectors that incorporate a proposed design change in which stainless steel end-plate screws are used instead of carbon steel screws.

This document reports on the manufacturing and acceptance of the test specimens, execution of the tests, test inspections, and assessment of the units as to their conformity with the requirements of 10 CFR 71.

Section 1 Transport Package Overview

The Model 660 Series projector consists of a source tube enclosed in a depleted-uranium shield, an end-plate with a lock assembly, a second end-plate with a storage plug assembly, four steel connecting rods, a sheet metal shell and foam packing material (Figure 1).

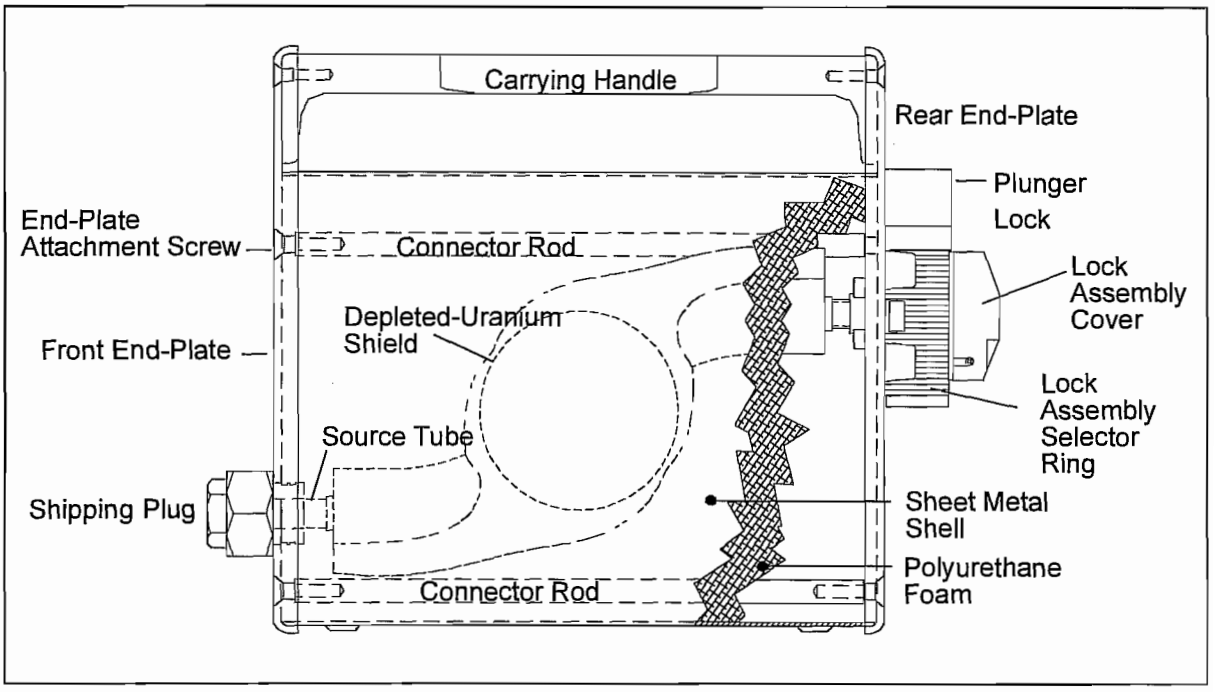

Figure 1: Side View of a Model 660 Series Projector

The shield consists of a 1/2-inch outside diameter source tube with its mid-section set in depleted uranium. One end of the source tube is inserted into a 1/2-inch hole in the lock assembly at the rear end-plate. The other end of the shield's source tube is inserted into another 1/2-inch hole in the shipping plug at the front end-plate. Both 1/2-inch holes allow enough radial clearance for a slip fitting attachment. There is approximately 1/8-inch axial clearance at the front end for assembly.

The source is contained in a special-form, encapsulated capsule assembly which is attached to the source wire assembly. This source wire assembly is secured in the package by the lock assembly. The lock assembly, in turn, is attached to the rear end-plate by four #10 stainless steel screws. There are two versions of the lock assembly used on the Model 660 series projectors. The size, material and location of the end-plate screws are identical on both versions.

The shield, end-plates and the sheet metal shell are connected by four 3/8-inch thick steel rods which are threaded at each end to accept 1/4-inch screws securing the end-plates to the rods.

A polyurethane foam is used to fill the space around the shield and to fill the void within the sheet metal shell. The foam acts as an impact absorber.

The depleted-uranium shield provides the primary radiation protection for the Model 660 Series projector. The shield accomplishes this by limiting the transmission of gamma rays to a dose level at or below 200 mR/hr at the package surface and limiting the dose level at or below 10 mR/hr at one meter from the surface of the package.

The location of the source relative to its stored position in the shield is also an important safety element. A large displacement of the source relative to its stored position could elevate the dose at the surface of the package above regulatory limits.

There are two possible scenarios to displace the source relative to its stored position:

- The shield could move away from the source if the source tubes were bent or fractured during testing.
- The source could move away from the shield if the lock assembly became loose or was removed from the end-plate or if the end-plates themselves became loose or were removed during testing.

The tests in this plan focused on damaging those components of the package which could cause the displacement of the source relative to its stored position within the shield.

Section 2 Test Specimen Production and Acceptance

The test units specified for this plan were seven test specimens manufactured for the Normal Transport Conditions testing under Test Plan #73.

The tests in Test Plan #74 were designed to further the damage inflicted on the units in Test Plan #73. The tests units were manufactured in the Amersham Burlington, Mass., facility in accordance with Amersham Drawing TP73, Rev. A.

As required in both test plans, the TP73 test units are standard Model 660B projectors with the following modifications:

- Shields weighing 37 to 39 pounds
- Supplemental lead added to the shield to increase shield assembly weight to 40 pounds
- Stainless steel screws used for end-plate fasteners instead of carbon steel screws
- End-plate screws with torque values set to either 10 in-lbs or 120 in-lbs

These modifications enabled us to produce test specimens that weighed at least 54 pounds, and to test the use of stainless steel end-plate screws as original equipment and as retrofit components.

Four test units (A, B, C and D) and three spares (S1, S2 and S3) were built according to the Drawing TP73, Rev. A. The units enabled us to test two different impact targets on units with end-plate screws set to different torque values (Table 1).

Table 1: TP73 Units

End-plate screw torque value	120 in-lbs (±10 in-lbs)	10 in-lbs (±2 in-lbs)
Impact bottom edge of rear plate	Specimens A, S1 and S3	Specimens C and S2
Impact top edge of front plate	Specimen B	Specimen D

The test specimens were manufactured in accordance with the Amersham Quality Assurance Program. The program provides for documentation of the manufacturing process, assures that the units comply with the relevant drawings and manufacturing instructions, and specifies radiological profiling of the completed product. Table 2 summarizes key manufacturing and profiling data.

Table 2: Test Specimen Manufacturing Data

Specimen	A	B	C	D	S1	S2	S3
Completion Date	12/16/97	12/16/97	12/16/97	12/16/97	12/16/97	12/16/97	1/6/98
Total Weight	55.1 lbs	54.9 lbs	55.3 lbs	54.9 lbs	54.8 lbs	55.1 lbs	55.3 lbs
Profile Data, Maximum Readings							
Package Surface (mR/hr)	142.5	142.5	133.0	133.0	152.0	152.0	147.0
At One Meter (mR/hr)	1.6	1.7	1.5	1.3	1.5	1.6	1.6

At the conclusion of Test Plan #73, representatives from Engineering, Quality Assurance and Regulatory Affairs reviewed test inspections and damage assessments on the test specimens. The assessment included radiation profiles on Specimens A, B, C, and D in accordance with Amersham Work Instruction Q09. The radiation profile worksheets are included in Appendix A. The maximum readings for each specimen are shown in Table 3. These readings, which are corrected for maximum capacity, demonstrate that the units met the requirements of 10 CFR 71.71 for normal conditions of transport.

Specimens S1, S2 and S3 were not subjected to Test Plan #73 testing until they were required as spares in Test Plan #74. The units were not profiled at the conclusion of the Normal Transport Conditions tests, as the purpose of the testing was to qualify the units for use in Test Plan #74 and profiling of A, B, C and D had already demonstrated conformity with 10 CFR 71.71 for all orientations.

Table 3: Maximum Readings from Test Plan #73 Final Test Inspection

Specimen	A	B	C	D	S1	S2	S3
Package Surface (mR/hr)	159.0	174.0	188.0	188.0	N/A	N/A	N/A
At One Meter (mR/hr)	1.4	1.2	1.5	1.3	N/A	N/A	N/A

Representatives from Engineering, Quality Assurance and Regulatory Affairs jointly confirmed that:

- The seven units selected for Test Plan #74 were adequately tested under Test Plan #73.
- There were no changes to the units since the final test inspections and assessments performed under Test Plan #73.
- No changes in orientation were required for the hypothetical accident conditions tests in Test Plan #74 because of damage sustained in Test Plan #73 testing.

Section 3 Hypothetical Accident Conditions

The TP73 test units underwent Hypothetical Accident Conditions tests in December 1997 and January 1998.

The testing demonstrated that the stainless steel end-plate screws maintained the end-plate connection throughout the tests. However, Specimen A had unacceptable radiation profile measurements after the thermal tests. Based on the data available, it is inconclusive whether the specimen failed because of a design flaw or because of damage incurred during handling and shipment.

This section describes the execution of the tests, results and the assessments made by representatives from Engineering, Regulatory Affairs and Quality Assurance.

3.1 Test Execution

The following Hypothetical Accident Conditions tests were conducted to meet the requirements of 10 CFR 71.73 and Test Plan #74:

- 30-foot free drop
- Puncture test
- Thermal test

Table 4 summarizes information about execution of the tests. In the table, package orientation is described as:

BRE where the impact surface is the bottom edge of the rear end-plate

TFE where the impact surface is the top edge of the front end-plate

NTP for normal transport position, that is, resting on the bottom

Table 4: Hypothetical Accident Conditions Tests (10 CFR 71.73)

Specimen	A	B	C	D	S1	S2	S3
30-foot Free Drop (Valley Tree, Groveland, Mass.)							
Test Date	12/23/97	12/24/97	12/23/97	12/24/97	1/8/98	12/24/97	1/11/98
Attempts	One	One	One	Two	One	One	Two
Orientation	BRE	TFE	BRE	TFE	BRE	BRE	BRE
Comments	Good hit	Good hit	Missed hit Replaced by S2	1st hit on right side; 2nd hit good	Missed hit Replaced by S3	Good hit	1st hit toward base; 2nd toward lock

Table 4: Hypothetical Accident Conditions Tests (10 CFR 71.73) (Continued)

Specimen	A	B	C	D	S1	S2	S3
Puncture Test (Valley Tree, Groveland, Mass)							
Test Date	12/23/97	12/23/97	Not Tested	12/24/97	Not Tested	12/24/97	1/11/98
Attempts	One	One		One		One	One
Orientation	BRE	TFE	BRE	TFE	BRE	BRE	BRE
Thermal Test (Manufacturing Science, Oak Ridge, Tenn.)							
Test Date	12/30/97	Not Tested	See Note1	12/30/97	Not Tested	12/30/97	1/13/98
Orientation	NTP			NTP		NTP	NTP

Note 1: Specimen C was subjected to the thermal test only to provide information to help in evaluating other specimens.

Testing began on December 23, 1997, with the four units that were used in the first round of Test Plan #73 testing. In the 30-foot free drop, Specimen C missed its intended impact surface, and was replaced by Specimen S2. S2 underwent normal testing under Test Plan #73 and on December 24, 1997, began testing under Test Plan #74.

The puncture test orientation for Specimens B and D was changed after the 30-foot drop to impact the top edge of the front end-plate to induce more damage, specifically to peel back the area of the end-plate left by the removed handle.

Specimen B did not undergo the thermal test because it was not as damaged as the other units. Specifically, there was no opening between the end-plate and the package, and therefore, it would sustain less damage from thermal testing.

Specimens A, D and S2 underwent thermal testing on December 30, 1997. The units were positioned in the normal transport position, that is, upright and resting on the bottom, to allow optimal airflow in and around the open gap created by damage to the shell and end-plates.

The units were shipped to Amersham's Burlington, Mass., facility on January 2, 1998, for radiographs and profiling. Amersham personnel were not on site in Oak Ridge to supervise the packaging and shipment of the test units.

The radiographs after the thermal tests showed displacement of the shield relative to the positions shown in radiographs taken after the puncture tests. In all three cases, a significant portion of the displacement was on the horizontal plane, indicating that the movement may have been caused during handling or shipment from Oak Ridge to Burlington. The thermal test orientation for these specimens would not have caused movement in the horizontal plane.

Profile results of Specimen A showed 9.3 R/hr at one meter. The other units (Specimens B and D) were within acceptable levels. To determine whether handling during transport caused the failure of Specimen A, we prepared Specimen S1 for testing and planned to measure the source position after the thermal test and before shipment.

In the 30-foot free drop, Specimen S1 missed its impact surface, creating the need for another substitution. A new unit, Specimen S3, was built and subjected to testing under Test Plan #73. The new unit underwent the 30-foot free drop and puncture test on January 11 and the thermal test on January 13.

The Specimen S3 was radiographed on site to determine source location before shipment and then radiographed upon receipt in Burlington. Comparison of the two radiographs showed no significant movement of the source. Subsequently the unit passed the radiation profile.

3.2 Damage Inspections

The test units incurred levels of mechanical damage as a result of the 30-foot free drop that were seen in previous testing:

- The rear end-plates were bowed on Specimens A, S2 and S3, producing a 3/16-inch (maximum) gap between the shell and end-plate.
- The tops of both end-plates were bent on Specimens B and D. No gap was produced on B; there was a 1/2-inch (maximum) gap on D.
- End-plate corners were crushed on Specimens S1 and C when these units missed their target impact surfaces. Both units were replaced.

In addition, the handle of Specimen B broke.

No additional mechanical damage to the tested units was evident as a result of the puncture test.

All of the stainless steel end-plate screws, including those set to 10 in-lb torque values, held the end-plates to the connecting rods, and there was no breakage.

Inspection of the units, including radiographs, showed that they maintained their structural integrity throughout the 30-foot drop and puncture test, that is, the source remained in the secured and shielded position and the end-plate screws held.

Four units were subjected to the thermal test: A, D, S2 and S3. As expected, the handle melted on each of the four units, and all or some of the foam burned off. There was no substantial oxidation of the shields as occurred in Test Plan #70. The end-plate-screws held the end-plates to the package throughout the testing and did not allow for increased airflow around the shield.

3.3 Test Assessment

The primary area of interest was the performance of the stainless steel end-plate screws. The test proved that the design change resolves the problem of shield performance caused by oxidation as occurred in Test Plan #70 and reported in the Test Plan #70 Test Results. In Test Plan #70, the oxidation occurred when the end-plate was not fully secured because of the breaks in the carbon steel end-plate screws.

Appendix A includes the worksheets for the radiation profiles taken as part of the final test inspection. Table 5 shows the maximum radiation measured in these profiles. The readings have been corrected for maximum capacity.

Table 5: Maximum Readings from Test Plan #74 Final Test Inspection

Specimen	A	B	C	D	S1	S2	S3
Profile date	1/5/98	1/5/98	Not profiled	1/7/98	Not profiled	Not profiled	1/19/98
Package Surface (mR/hr)	3000	390		281			1862
At One Meter (mR/hr)	9300	2.7		4.7			9.3

The evaluation of Specimen A and the subsequent testing of Specimen S3 did not resolve whether the movement of the source from its ideal shielded position was the result of a design flaw or the result of damage caused in handling and transport of the package. We were unable to exactly replicate the mechanical damage to Specimen A.

The measurement after the S3 thermal test showed that the source had moved only 0.2 inch, which resulted in acceptable levels of radiation. Test inspection revealed that the source wire had severed. The Specimen A source wire did not break and remained engaged in the lock assembly when the shield moved, pulling the source from the center of the shield which provides maximum shielding.

Although Specimen S3 satisfactorily met all of the test requirements, the damage was not identical to to Specimen A, and therefore, it could not be used as a replacement for Specimen A.

No conclusion can be drawn as to whether the Specimen A failed because of transport damage.

3.4 Conclusions

Based on the testing performed under Test Plan #74, the team concluded that:

- The stainless steel end-plate screws satisfactorily met all of the test requirements and the screws should be used on all Model 660 Series projectors.
- The torque value of the screws is not a significant factor in their performance and retrofitting of projectors with new screws can be accomplished in the field.
- Because of the difficulty of replicating specific mechanical damage, continued testing of TP73 units will probably not resolve the question of whether Specimen A failed because of design or damage from handling.
- Amersham should proceed with design evaluation *as if* Specimen A had failed because of its design, and examine design changes that would restrict shield movement during thermal testing.

Appendix A: Radiation Profile Worksheets

SENTINEL

660/660B DEVICE PROFILING FORM

B3587 (LMA) 12 Jan 98

Device Model No.: 660B Device Serial No.: ~~After~~ TP73"A" Thermal

Model ~~424-9~~ T10163 Source Serial Number: X0016 Activity: 93.2 Ci

~~Surface~~ <500 mR/hr Survey Instrument: AN/PDR 27T Serial No: SM-392481 Cal Due: 3/18/98

~~One Meter~~ (*) ≥ 500 mR/hr Survey Instrument: Tech-50 Serial No: B-814-S Cal Due: 7/22/98

Capacity Corr. Factor 1.5

	SURFACE READINGS mR/hr		ONE METER READINGS mR/hr	
	~~Allowed~~ Extrapolated for Capacity only	Actual	~~Allowed~~ Extrapolated	Actual
TOP	780	520*		
RIGHT	3 R/hr	2 R/hr*		
FRONT	40.5	27	1.4	0.9
LEFT	3 R/hr	2 R/hr*		
REAR	3 R/hr	2 R/hr*	9.3 R/hr	6.2 R/hr*
BOTTOM	1.8 R/hr	1.2 R/hr*	18	12.0

>1 R/hr. No addl measurements taken on device.

INSPECTOR: [signature] DATE: 5 Jan 98 NCR No.:

Comments:

- No surface corrections made. Actual surface enclosed in plastic bagging which varied in thickness from ½-1".

- Surface doses for general info only. Primary purpose of profile was for 1 meter readings. Surface levels on sides and rear may be higher than recorded. Radiation was a finely collimated beam from S-tube out the rear of the device which was difficult to quantify precisely without receiving

(LMA) 12 Jan 98

Amersham QSA

WI-Q05

SENTINEL

660/660B DEVICE PROFILING FORM

B3588 (KNA) 12 Jan 98

Device Model No.: 660B Device Serial No.: ~~After Thermal~~ TP73 "B" After 30 Ft & Puncture

Model ~~424-9~~ T10163 Source Serial Number: X0016 Activity: 93.2 C

Surface Survey Instrument: AN/PDR 27T Serial No: SM-392401 Cal Due: 3/18/98

One Meter Survey Instrument: Same Serial No: — Cal Due: —

* Non-leaded plug used during profile.

Capacity Corr. factor 1.50

	Surf Corr. Fact	SURFACE READINGS mR/hr Extrapolated ~~Allowed~~	Actual		ONE METER READINGS mR/hr Extrapolate ~~Allowed~~	Actual
TOP	1.16	104.4	60	TOP	1.0	0.7
RIGHT	1.28	153.6	80	RIGHT	0.9	0.6
FRONT	1.13	389.9	230	FRONT	2.7	1.8
LEFT	1.28	115.2	60	LEFT	0.75	0.5
REAR	1.13	152.6	90	REAR	1.5	1.0
BOTTOM	1.19	107.1	60	BOTTOM	0.9	0.6

INSPECTOR: L. Podolak DATE: 5 Jan 98 NCR No.: _____

Comments:

(KNA) 12 Jan 98

Amersham QSA

WI-Q05

SENTINEL

660/660B DEVICE PROFILING FORM

B3590 (KNA) 12 Jan 98

Device Model No.: 660B Device Serial No.: TP73 "D" After Thermal

Model ~~424-9~~ T10163 Source Serial Number: X0016 Activity: 89.7 Ci

Surface Survey Instrument: Bicron Tech-Sc Serial No: B-814-S Cal Due: 7/22/98

One Meter Survey Instrument: Same Serial No: – Cal Due: –

Capacity Corr. Factor
1.56

	SURFACE READINGS mR/hr			ONE METER READINGS mR/hr	
	~~Allowed~~	Actual		Extrapolated ~~Allowed~~	Actual
TOP		130	TOP	2.3	1.5
RIGHT		180	RIGHT	1.9	1.2
FRONT		80	FRONT	2.7	1.7
LEFT		50	LEFT	2.2	1.4
REAR		90	REAR	4.7	3.0
BOTTOM		50	BOTTOM	1.7	1.1

INSPECTOR: [signature] DATE: 9 Jan 98 NCR No.: _____

Comments:

* Surface of unit enclosed in multiple layers of plastic bags for contamination control of uranium oxide. Thickness varies from 1/4" to 1".

* Surface readings taken for exposure control and general information purposes only.

(KNA) 12 Jan 98

Amersham QSA

WI-Q05

SENTINEL

660/660B DEVICE PROFILING FORM

TP74 +
TP73 "S3"

Serial# B3586
KMA 21 Jan 98

Device Model No.: 1060B Device Serial No.: After Thermal

T10163
Model ~~424-9~~ Source Serial Number: X0017 Activity: 105.0 C.

Surface Survey Instrument: AN/PDR-27T Serial No: SM-397401 Cal Due: 18 Mar 98

One Meter Survey Instrument: AN/PDR-27T Serial No: SM-397401 Cal Due: 18 Mar 98

Capacity Corr. Factor
1.33

	SURFACE READINGS mR/hr	
	~~Allowed~~	Actual
TOP		70 mR/hr
RIGHT		80 mR/hr
FRONT		940 mR/hr Δ
LEFT		110 mR/hr
REAR		1400 mR/hr Δ
BOTTOM		130 mR/hr

	ONE METER READINGS mR/hr	
	Extrapolated ~~Allowed~~	Actual
TOP	1.9	1.4 mR/hr
RIGHT	1.5	1.1 mR/hr
FRONT	5.6	4.2 mR/hr
LEFT	1.3	1.0 mR/hr
REAR	9.3	7.0 mR/hr
BOTTOM	1.6	1.2 mR/hr

INSPECTOR: [signature] DATE: 19 Jan 98 NCR No.: NA

Comments:

* Surface readings taken for exposure control and general information purposes only.

Δ Measurements taken with Model # ND 3000, S/N 9837 (Next cal date 23 Sept 98) [signature] 19 Jan 98

Amersham QSA

WI-Q05

Table of Contents

List of Figures and Tables iv

1.0 Current Transport Package Overview 2

2.0 Purpose 3

3.0 System Failure of Interest 4

4.0 Construction and Condition of Test Specimens 7

5.0 Material and Equipment List 10

6.0 Test Procedure 11

6.1 Roles and Responsibilities 11

6.2 Test Specimen Preparation and Inspection 12

6.3 30-foot Free Drop Test (10 CFR 71.73(c)(1)) 13

6.3.1 30-foot Free Drop Setup 13

6.3.2 Orientation for the 30-foot Free Drop: Specimens A & C 14

6.3.3 Orientation for the 30-foot Free Drop: Specimens B & D 15

6.3.4 30-foot Free Drop Test Assessment 16

6.4 Puncture Test (10 CFR 71.73(c)(3)) 17

6.4.1 Puncture Test Setup 17

6.4.2 Orientation for the Puncture Test: Specimens A & C 18

6.4.3 Orientation for the Puncture Test: Specimens B & D 19

6.4.4 Puncture Test Assessment 20

6.5 Intermediate Test Inspection 20

6.6 Thermal Test (10 CFR 71.73(c)(4)) 21

6.6.1 Thermal Test 23

6.6.2 Thermal Test Assessment 23

6.7 Final Test Inspection 24

6.8 Final Assessment 24

7.0 Worksheets 25

Appendix A: Drawings

Appendix B: Selected Fasteners

Appendix C: Referenced Materials

List of Figures and Tables

Figure 1: Side View of a Model 660 Series Projector 2

Figure 2: Impact on Bottom Edge of Front End Plate 5

Figure 3: Impact on Top Edge of the Front Plate 5

Figure 4: Impact on Bottom Edge of Rear Plate 6

Figure 5: Impact on Top Edge of the Rear Plate 6

Table 1: Model 660 Series Variations 8

Figure 6: Orientation for the 30-foot Free Drop: Specimens A & C 14

Figure 7: Orientation for the 30-foot Free Drop: Specimens B & D 15

Figure 8: Orientation for the Puncture Test: Specimens A & C 18

Figure 9: Orientation for the Puncture Test: Specimens B & D 19

Equipment List 1: 30-foot Free Drop 26
Checklist 1: 30-foot Free Drop 27

Equipment List 2: Puncture Test 30
Checklist 2: Puncture Test 31

Equipment List 3: Thermal Test 34
Checklist 3: Thermal Test 35

Amersham Test Plan #74

This document describes additional package design testing for Sentinel Model 660 Series projectors to meet NRC requirements for Type B(U) packages under Hypothetical Accident Conditions (10 CFR 71.73). Testing under Normal Transport Conditions (10 CFR 71.71) is described in Amersham Test Plan #73.

The test plan also covers the criteria stated in IAEA, Safety Series 6 (1985, as amended 1990). Quality Assurance will be involved in all aspects of this test plan and its execution.

The Model 660 Series includes the following models: 660, 660A, 660B, 660E, 660AE, and 660BE. Reference Certificate of Compliance 9033.

The tests in this plan evaluate a Model 660 Series design change that resulted from tests performed under Amersham Test Plan #70. In that testing, the 30-foot free drop caused failure of the end-plate screws on Specimen D, and subsequent oxidation and loss of the shield during the thermal test. The design change involves the use of stainless steel end-plate screws instead of the carbon steel screws used in the Test Plan #70 specimens.

We are specifying Military Standard screws, MS 51959-81 (1/4-20 x 3/4" long). The specification is included in Appendix B: Selected Fasteners. The tensile strength of these screws is twice that of the nominal strength of the carbon steel screws (110,000 psi versus 55,000 psi). In addition, at room temperature, the toughness of stainless steel is 40% greater than that of carbon steel; at -40° C, the stainless steel's toughness is four times greater than carbon steel's. Refer to the toughness versus temperature curve in Appendix B: Selected Fasteners.

As noted in the failure analysis by Packaging Technology, Inc. (November 25, 1997), the Specimen D shield experienced a deceleration of 200g in the 30-foot free drop in Test Plan #70. If the two end-plate screws closest to the lock assembly experience the full extent of the shield deceleration load, the tensile stress induced in these screws is calculated as follows:

$$\begin{aligned} \text{stress} &= (\text{shield mass})\,(\text{impact deceleration}) \,/\, \text{tensile area} \\ &= (40\text{ lbs})\,(200\text{g} \times \cos 39°) \,/\, (2 \times 0.0318\text{ in}^2) \\ &= 97{,}800\text{ psi} \end{aligned}$$

The induced stress is less than the ultimate strength of the two stainless steel screws (110,000 psi).

This document outlines the testing scenario, justifies the package orientations, and provides test worksheets to record key steps in the testing sequence.

1.0 Current Transport Package Overview

The Model 660 Series projector consists of a source tube enclosed in a depleted-uranium shield, an end plate with a lock assembly, a second end plate with a storage-plug assembly, four steel connecting rods, a sheet metal shell and foam packing material (Figure 1).

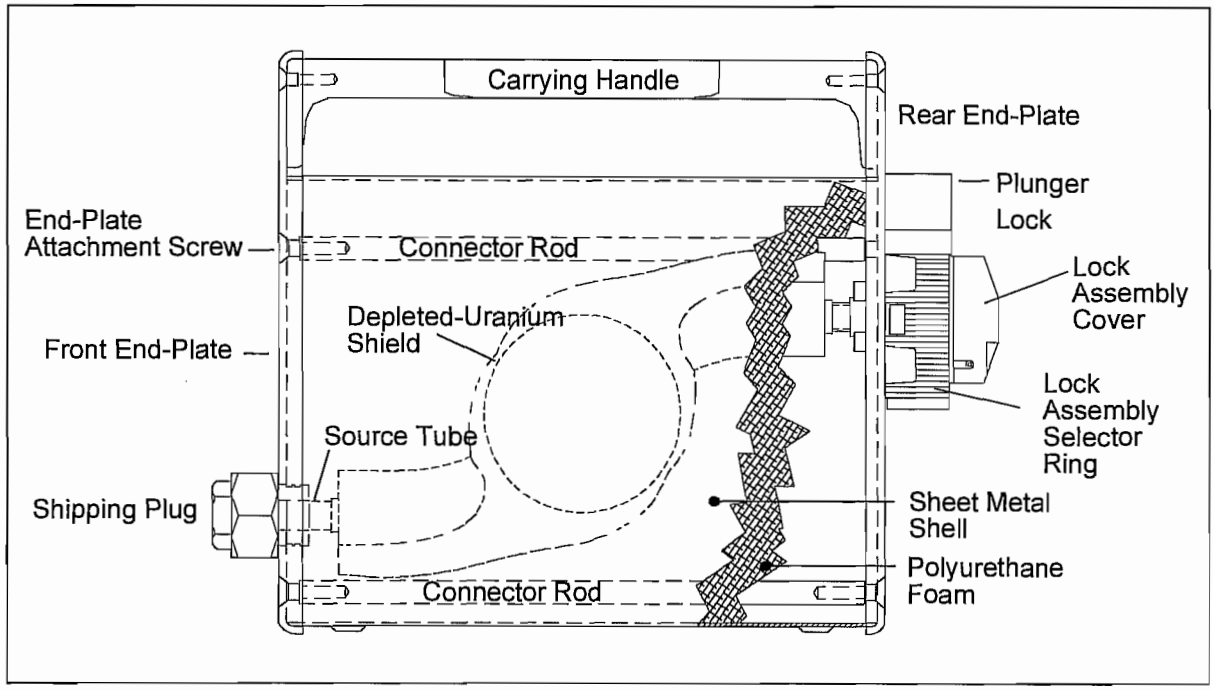

Figure 1: Side View of a Model 660 Series Projector

The shield consists of a 1/2-inch outside diameter source tube with its mid-section set in depleted uranium. One end of the source tube is inserted into a 1/2-inch hole in the lock assembly at the rear end-plate. The other end of the shield's source tube is inserted into another 1/2-inch hole in the shipping plug at the front end-plate. Both 1/2-inch holes allow enough radial clearance for a slip fitting attachment. There is approximately 1/8-inch axial clearance at the front end for assembly.

The source is contained in a special-form, encapsulated capsule assembly which is attached to the source wire assembly. This source wire assembly is secured in the package by the lock assembly. The lock assembly, in turn, is attached to the rear end-plate by four #10 stainless steel screws. There are two versions of the lock assembly used on the Model 660 series projectors. The size, material and location of the end-plate screws are identical on both versions.

The shield, end plates and the sheet metal shell are connected by four 3/8-inch thick steel rods which are threaded at each end to accept 1/4-inch screws securing the end plates to the rods.

A polyurethane foam is used to fill the space around the shield and fill void within the sheet metal shell. The foam acts as an impact absorber.

The depleted-uranium shield provides the primary radiation protection for the Model 660 Series projector. The shield accomplishes this by limiting the transmission of gamma rays to a dose level at or below 200 mR/hr at the package surface and limiting the dose level at or below 10 mR/hr at one meter from the surface of the package. A fracture of the shield could compromise this protection.

The location of the source relative to its stored position in the shield is also an important safety element. A large displacement of the source relative to its stored position could elevate the dose at the surface of the package above regulatory limits.

There are two possible scenarios to displace the source relative to its stored position:

- The shield could move away from the source if the source tubes were bent or fractured during testing.
- The source could move away from the shield if the lock assembly became loose or was removed from the end plate or if the end plates themselves became loose or were removed during testing.

The tests in this plan focus on damaging those components of the package which could cause the displacement of the source relative to its stored position within the shield and which affect the integrity of the shield itself.

2.0 Purpose

The purpose of this plan, which was developed in accordance with Amersham SOP-E005, is to test and evaluate modifications to the Model 660 Series projectors so that the Type B transport package requirements of 10 CFR 71 are met.

The series includes these models: 660, 660A, 660B, 660E, 660AE, and 660BE. Refer to Appendix A for descriptive drawings of these models.

The Normal Transport Conditions tests (10 CFR 71.71) have been performed on the test specimens as part of Amersham Test Plan #73. These tests included the compression test, penetration test and four-foot free drop.

The Hypothetical Accident Conditions tests (10 CFR 71.73) to be performed are the 30-foot free drop, puncture test, and thermal test.

The crush test (10 CFR 71.73(c)(2)) is not performed because the radioactive contents are special-form radioactive material.

The immersion test and all other conditions specified in 10 CFR 71 will be separately evaluated in accordance with Amersham Work Instruction WI-E08.

3.0 System Failure of Interest

The possible system failure tested in this plan is the failure of the end-plate screws. Failure of the end-plate screws on either plate could cause exposure of the shield to damage during the thermal test, especially if the foam burns.

Two package orientations are specified in this plan:

- Specimen D orientation in Test Plan #70, the orientation that caused the end-plate screw failure.
- Inversion of the Test Plan #70 Specimen D orientation. The impact surface is the top edge of the front plate.

Other orientations that were considered but rejected include:

- End plate sides. Because these surfaces are curved, they provide very small impact surfaces compared to the top or bottom edge of either plate.
- Top edge of the rear plate. The load on the screws provided by this orientation would be less than the load created by the orientation for Specimens B and D.

Figure 2 through Figure 5 show the four possible orientations to impact either the top or the bottom edge of an end-plate. With each figure is a calculation of the loading on the screws of interest. The calculations assume that the end plate is attached only at point **a**.

For sake of illustration, the calculations use 56 pounds for the vertical force. In the calculations:

$\mathbf{f_x}$ is the component force loading parallel with the axis of the screws.

$\mathbf{f_y}$ is the component force loading perpendicular to the axis of the screws.

Summing the moments around the impact point (**r**) and equating it to zero determines the resultant force at the point of the screws (**a**).

Figures 3 and 4 demonstrate the worst-case loading on the end-plate screws of interests. These are the orientations selected for this test plan.

Two units are to be tested with each orientation, one with the end-plate screws torqued to 120 in-lbs (±10 in-lbs), the other with the end-plate screws tightened to 10 in-lbs (±2 in-lbs).

The orientations in this test plan are designed to further the damage to the end-plate screws caused during the execution of Test Plan #73.

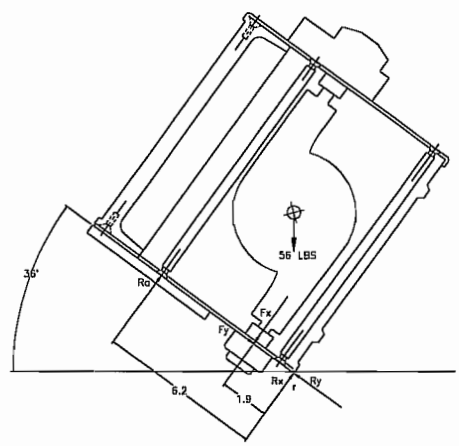

Fx = 56 COS (36°) = 45 LBS
Fy = 56 SIN (36°) = 33 LBS

Mr = 0 = (1.9)*(45) − (6.2)*(Ra) = 0
Ra = 13.8 LBS
IMPACT ON BOTTOM FRONT EDGE

Figure 2: Impact on Bottom Edge of Front End Plate

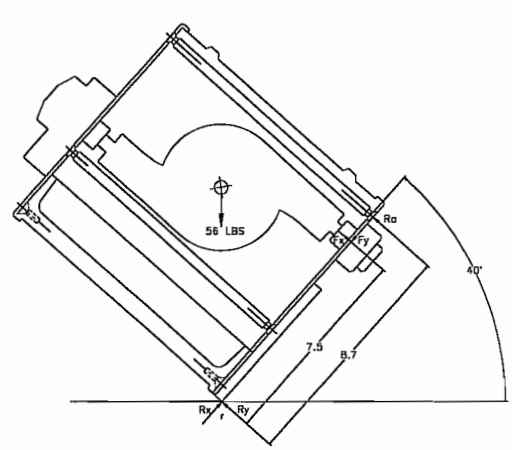

Fx = 56 COS (40°) = 43 LBS
Fy = 56 SIN (40°) = 36 LBS

Mr = 0 = (7.5)*(43) − (8.7)*(Ra) = 0
Ra = 37.1 LBS
IMPACT ON TOP FRONT EDGE
(ORIENTATION B&D)

Figure 3: Impact on Top Edge of the Front Plate

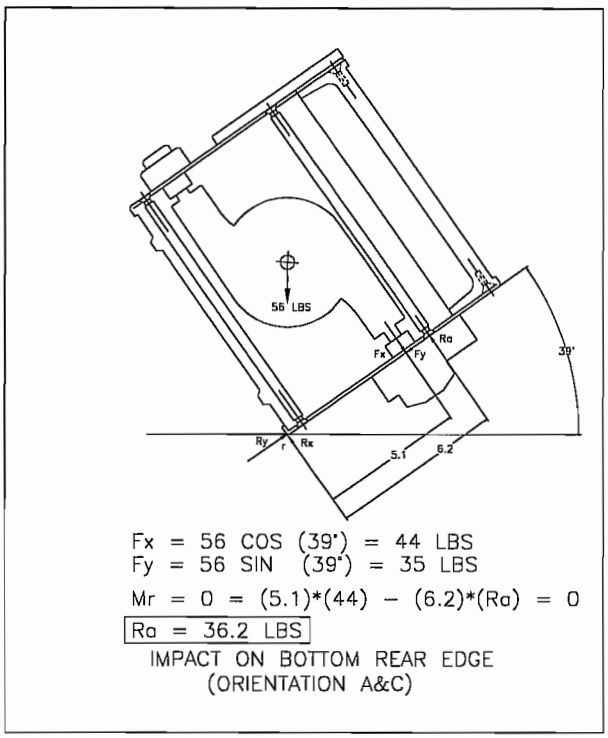

Figure 4: Impact on Bottom Edge of Rear Plate

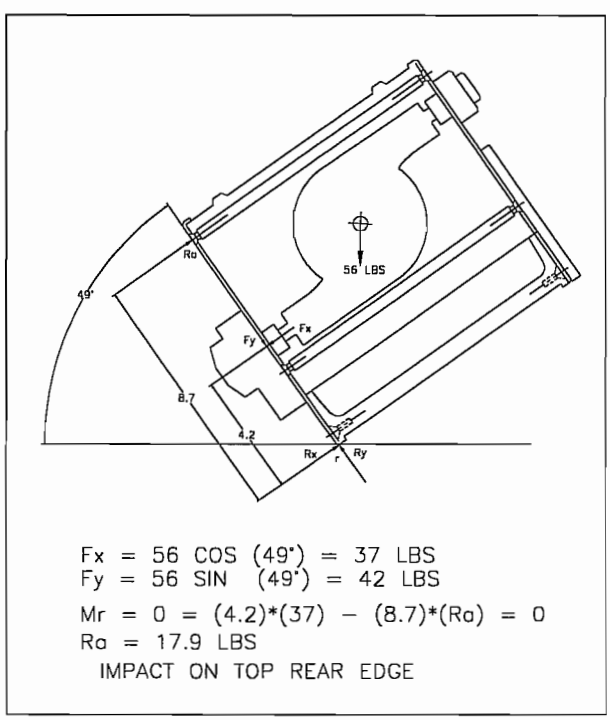

Figure 5: Impact on Top Edge of the Rear Plate

4.0 Construction and Condition of Test Specimens

The test specimens will be the Model 660B units built for the Normal Transport Conditions tests in Test Plan #73. These units were constructed in accordance with Amersham Drawing TP73, Rev. A (Drawing TP73). With the exception of the stainless steel end-plate screws, the units specified in Drawing TP73 are in accordance with the NRC-approved design.

Drawing TP73, specifies the Model 660 Series in its worst-case transport condition, that is, with supplemental lead added to the shield. The added weight induces higher loads during dynamic testing.

For the 30-foot free drop and the puncture tests, the test temperature of specimen must be at or below -40° C at the time of each test, a minimum temperature required by IAEA, Safety Series 6 (1985, as amended 1990). The low temperature represents the worst-case condition for the package because of the potential for reduction in strength of the end-plate screws.

Four test units and two spares were built according to the Drawing TP73 and the Amersham Quality Assurance Program:

End-plate screw torque value	120 in-lbs (±10 in-lbs)	10 in-lbs (±2 in-lbs)
Impact bottom edge of rear plate	Specimen A	Specimen C
Impact top edge of front plate	Specimen B	Specimen D
Spare unit	Specimen S1	Specimen S2

- The tests for Specimens A and C attack the end-plate screws by targeting the bottom edge of the rear end-plate.
- The tests for Specimens B and D attack the top edge of the front plate.

The package orientations specified in this plan are designed to further the damage inflicted on the TP73 test units in testing under Normal Transport Conditions.

NOTE: *Because each test is designed to add to damage inflicted on a specific component or assembly in the preceding test, it is important that each specimen maintain its identity throughout the battery of tests and that the setup instructions specific to the specimen are strictly followed.*

Table 1 lists the differences between the test specimens and other 660 Series models.

Table 1: Model 660 Series Variations

Feature	Test Specimen per Drawing TP73	660 Series Models
Shell Material	Stainless steel	Models 660AE, 660BE and 660E have wires and connectors attached to ends plates for automatic actuation. Models 660, 660A and 660B do not have actuator wires and connectors.
Lock Assembly	Posilok™	The Model 660 and 660E use a non Posilok lock assembly. All other models feature the Posilok lock assembly.
Actuator Wires and Connectors	No actuator wires and connectors	Models 660AE, 660BE and 660E have wires and connectors attached to ends plates for automatic actuation. Models 660, 660A and 660B do not have actuator wires and connectors.
Shield Capacity	140 Curie	The following models have 120-Curie capacity shields: 660, 660A, 660AE and 660E. The following models have 140-Curie capacity shields: 660B and 660BE.
Body Width	Standard width (5 1/4 inches)	Some Model 660s and Model 660Es have a narrow-body design (4 3/4 inches wide). All other models only use the standard-width body (5 1/4 inches).
Source Tube Material	Titanium	Prior to 1980, the Models 660, 660A, 660AE and 660E were manufactured with zircaloy source tubes. All other units have titanium source tubes.
Use of Lead	Supplemental lead added	Prior to June 1992, some units in the Model 660 Series had lead added to supplement the shielding. The maximum amount of lead added was three pounds. The amount was also limited by a maximum shield weight of 40 pounds and a maximum package weight of 56 pounds.
Weight	54 pounds minimum	Over the last five years, the average package weight has been approximately 50 pounds. Earlier in the product history, the average weight was approximately 53 pounds.
End-plate fasteners	Stainless steel screws MS 51959-81	Standard Model 660 Series projectors have commercial carbon steel end-plate screws.

Table 1: Model 660 Series Variations (Continued)

Feature	Test Specimen per Drawing TP73	660 Series Models
End-plate screw torque value	Specimens A, B and S1 end-plate screws tightened to 120 in-lbs (±10 in-lbs) Specimens C, D and S2 end-plate screws tightened to 10 in-lbs (±2 in-lbs)	Carbon steel screws used in the standard Model 660 Series projectors are torqued to 80 in-lbs (±10 in-lbs)

The differences listed in Table 1 impact the testing or are made for the following reasons:

- **Shell Materials**: The shell thickness is 1/16-inch for the carbon steel and stainless steel versions. The likelihood of a crack or brittle flaw increases with the thickness of the section and is a problem in sections greater than 1/8-inch. Additionally, the temperature for transition from ductile to brittle failure is lower for the thinner sections. The thicker carbon steel end plates will reach the ductile-to-brittle transition temperature long before the shell does. The end plates are structural members, while the shell is not structurally significant.

- **Lock Style**: Damage to the Posilok lock assembly used on the test specimen would represent damage to any Model 660 Series lock assembly, including the non Posilok style assemblies used on the Model 660 and the Model 660E.

  The internal components of both lock assemblies are protected by the same lock assembly cover and practically the same selector ring. The cover and selector ring must be significantly damaged before an impact can disrupt the internal components' securement of the source. Because of the strength of the cover and the selector ring, damage to the source securement is more likely to occur from the failure of the lock assembly screws. All models use the same type and size screws in the same locations.

- **Actuator Wires and Connectors:** The additional parts used for automatic actuation provide no structural support.

- **Shield Capacity:** The lower-capacity shields are either lighter than or the same weight as the shield used on the Model 660B, making the 660B the worst case for shield failures of interest in these tests.

- **Body Width:** The end plates and shells of the narrow-body versions of the Model 660 and the Model 660E would provide smaller impact surfaces than the standard-width plates and shell used in the test specimen. The smaller impact surfaces would result in greater surface deformation and less deceleration on impact. As a result there would be less transfer of impact forces that could affect the integrity of the source securement.

- **Source Tube Material:** The Model 660 Series projectors have been manufactured with titanium source tubes exclusively since 1980. Because this represents our current manufacturing methods and because the majority of Model 660 Series units currently in use have titanium source tubes, the test specimens will be manufactured with titanium source tubes. Based on an evaluation of the damage caused by the tests, we will assess the implications for previously fabricated packages which utilized zircaloy.

  Note that although listed on the descriptive drawings, stainless steel source tubes have never been used in the fabrication of Model 660 Series units, nor do we intend to use them in future fabrication.

- **Supplemental Lead:** Prior to June 1992, supplemental lead was used in the production of Model 660 Series projectors with the depleted-uranium shield. Although the addition of supplemental lead is no longer a production technique, the test specimens will be fabricated with the supplemental lead to ensure the maximum device mass.

- **Package Weight:** Because of more efficient casting and the elimination of supplemental lead shielding, the average weight of Model 660 units produced in the last five years is three pounds less than the average weight for units produced in the early years of the series history. Two steps will be taken to build test specimens that will weigh at least 54 pounds:

  - Heavier depleted-uranium shields will be fabricated.
  - Supplemental lead will be added to the shield.

  The TP73 will be consistent with current manufacturing procedures and will represent the heavier units in the Model 660 population. Ninety-seven percent of all 660 units produced weigh 54 pounds or less.

- **End-plate screws:** Stainless steel end-plate screws are being used on the TP73 to test the ability of these fasteners to prevent the failure of the end-plate screws seen in TP70 Specimen D.

- **End-plate screw torque values:** The greater strength of the selected stainless steel end-plate screws allows tightening to a higher torque value than the carbon steel screws. The higher value is being tested with Specimens A and B to evaluate a new manufacturing standard. A low torque value is being tested with Specimens C and D to simulate an untorqued assembly.

5.0 Material and Equipment List

The test worksheets in Section 7.0 list the key materials and equipment specified in 10 CFR 71 and the necessary measurement instruments.

When video recording is specified in the following tests, select video cameras with the highest shutter speed practical to record testing.

Additional materials and equipment may be used to facilitate the tests.

6.0 Test Procedure

Four units are tested in parallel with the same sequence but with two different package orientations that test the use of stainless steel end-plate screws, as described in Section 3.0. The tests have the following sequence:

1. Test specimen preparation and inspection
2. 30-foot free drop (10 CFR 71.73(c)(1))
3. Puncture test (10 CFR 71.73(c)(3))
4. Intermediate test inspection
5. Thermal test (10 CFR 71.73(c)(4))
6. Final test inspection

6.1 Roles and Responsibilities

The responsibilities of the groups identified in this plan are:

- Engineering executes the tests according to the test plan and summarizes the test results. Engineering also provides technical input to assist Regulatory Affairs and Quality Assurance as needed.
- Regulatory Affairs monitors the tests and reviews test reports for compliance with regulatory requirements.
- Quality Assurance oversees test execution and test report generation to ensure compliance with 10 CFR 71, other regulatory requirements and the Amersham Quality Assurance Program.
- Engineering, Regulatory Affairs and Quality Assurance are jointly responsible for assessing test and specimen conditions relative to 10 CFR 71.
- Quality Control, a function that reports directly to Quality Assurance, is responsible for measuring and recording test and specimen data throughout the test cycle.
- The managers directly responsible for Engineering, Regulatory Affairs and Quality Assurance will identify and document personnel who are qualified to represent their departments in carrying out this test plan.

6.2 Test Specimen Preparation and Inspection

To prepare the test units:

1. Select the units tested under Amersham Test Plan #73.
2. Inspect the test units to ensure that they match the units described on the Test Plan #73 worksheets and attached damage assessments.
3. Confirm that a radiation profile was performed and recorded in accordance with Amersham Work Instruction WI-Q09 at the conclusion of Test Plan #70.
4. Measure and record the weight of each test specimen.
5. Prepare the packages for transport.

6.3 30-foot Free Drop Test (10 CFR 71.73(c)(1))

The first Hypothetical Accident Conditions test is the 30-foot free drop as described in 10 CFR 71.73(c)(1). This drop compounds any damage caused in the three Normal Transport Conditions tests in Test Plan #73.

Use *Checklist 1: 30-foot Free Drop* on page 27 to ensure that the test sequence is followed. Date and initial all action items, and record required data on the worksheet.

Figure 6 illustrates the orientation for Specimens A and C. Figure 7 shows the orientation for Specimen B and D. The orientations are the same as those for the four-foot free drop in Test Plan #73 except the package is raised 30 feet above the drop surface.

This test requires that test specimens be at or below -40° C at the time of the drop. Follow the Worksheet instructions for measuring and recording the specimen temperature before and after the drop.

6.3.1 30-foot Free Drop Setup

To set up a package for the 30-foot drop test:

1. Use the drop surface specified in Drawing AT10122, Rev B.
2. Measure and record the weight of test specimen.
3. Measure and record the specimen's internal and surface temperature, and ensure that the package is at or below -40° C.
4. Place the specimen on the drop surface and position it according to the appropriate orientation.

   Refer to Figure 6 for Specimens A and C.

   Refer to Figure 7 for Specimens B and D.
5. Align the selected center-of-gravity marker as shown in the referenced drawing.
6. Raise the package so that the impact target is 30 to 32 feet above the drop surface.

6.3.2 Orientation for the 30-foot Free Drop: Specimens A & C

Figure 6 shows the package orientation for Specimens A and C for the 30-foot free drop.

This orientation targets the bottom edge of the rear end-plate with the objective of loosening or shearing the end-plate screws which hold the plate to the steel connecting rods. The bottom edge of the plate provides the greatest surface area for a direct hit, and thus the most rapid deceleration, and was proven to be the most damaging to the unit during previous testing in Test Plan#70.

Make sure the center of gravity is directly over the point of impact.

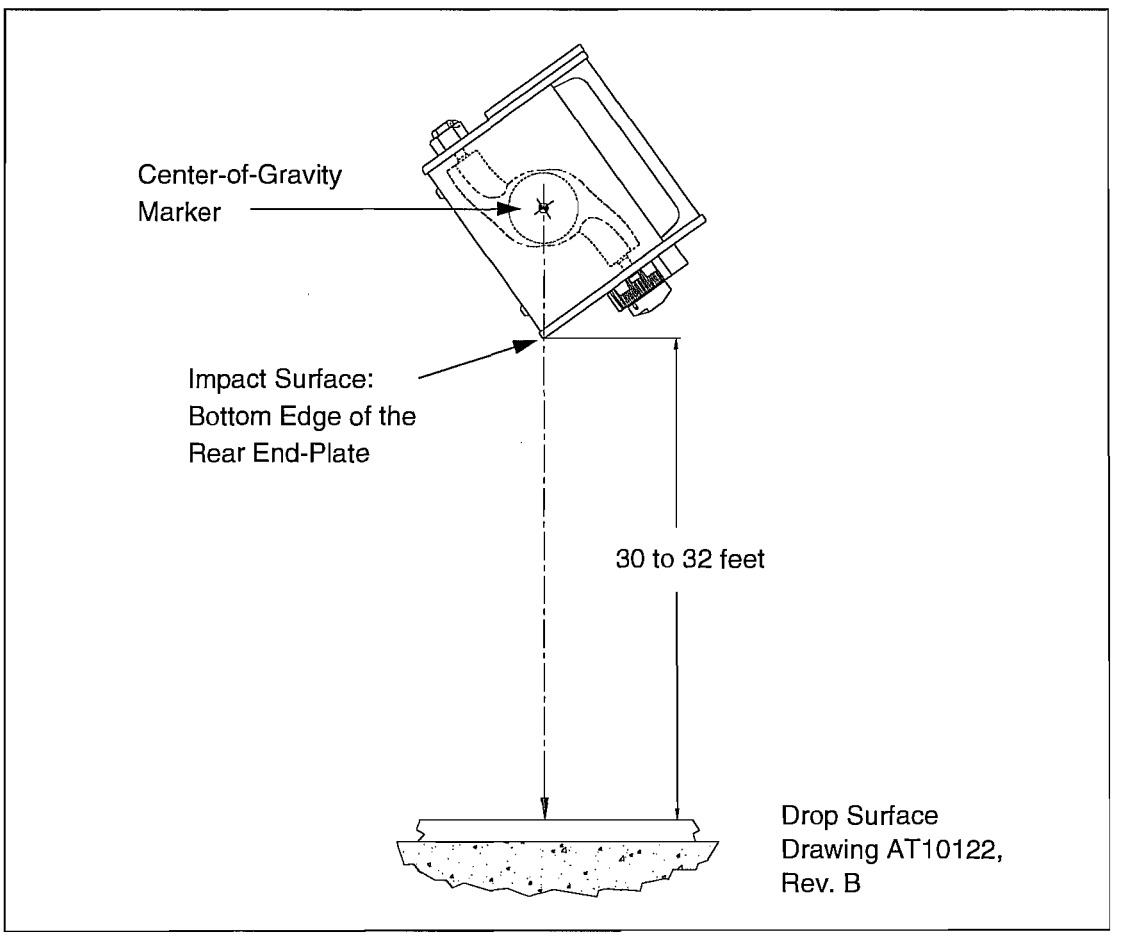

Figure 6: Orientation for the 30-foot Free Drop: Specimens A & C

6.3.3 Orientation for the 30-foot Free Drop: Specimens B & D

Figure 7 shows the package orientation for Specimens B and D for the 30-foot free drop.

This orientation targets the top edge of the front end-plate. The drop is designed to cause deformation of the end plate, which in turn will create multiple loads paths on the end-plate screws.

Make sure the center of gravity is directly over the point of impact.

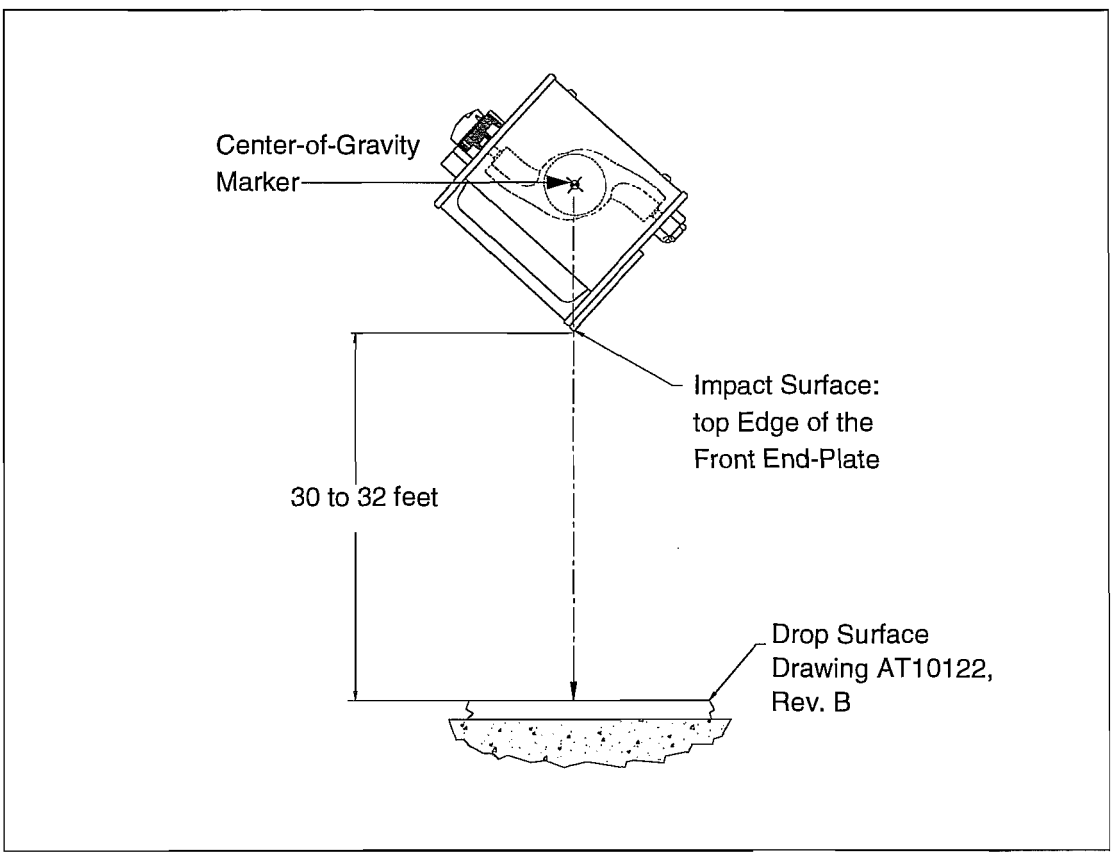

Figure 7: Orientation for the 30-foot Free Drop: Specimens B & D

6.3.4 30-foot Free Drop Test Assessment

Upon completion of the test, Engineering, Regulatory Affairs and Quality Assurance team members will jointly perform the following tasks:

- Review the test execution to ensure that the test was performed in accordance with 10 CFR 71. Units S1 and S2 may need to be tested, possibly with torque adjustments, to ensure test compliance.
- Make a preliminary evaluation of the specimen relative to the requirements of 10 CFR 71.
- Assess the damage to the specimen to decide whether testing of that specimen is to continue.
- Evaluate the condition of the specimen to determine what changes are necessary in package orientation in the puncture test to achieve maximum damage.

6.4 Puncture Test (10 CFR 71.73(c)(3))

The 30-foot free drop is followed by the puncture test per 10 CFR 71.73(c)(3), in which the package is dropped from a height of at least 40 inches onto the puncture billet specified in Drawing CT10119, Rev. C.

The billet is to be bolted to the drop surface used in the free drop tests (Figure 8).

Use *Checklist 2: Puncture Test* on page 31 to ensure that test sequence is followed. Date and initial all action items, and record required data.

6.4.1 Puncture Test Setup

There are two different package orientations for the puncture test. Each orientation assures that the package lands on the component or assembly of interest.

NOTE: *Because each test is designed to add to damage inflicted on a specific component or assembly in the preceding test, it is important that each specimen maintain its identity throughout the battery of tests and that the setup instructions specific to the specimen are strictly followed.*

This test requires that the test specimens be at or below -40° C at the time of the test. The worksheet calls for measuring and recording the specimen temperature before and after the test.

This test uses the 12-inch high puncture billet (Drawing CT10119, Rev. C). The billet meets the minimum height (8 inches) required in 10 CFR 71.73(c)(3). The specimen has no projections or overhanging members longer than 8 inches which could act as impact absorbers, thus allowing the billet to cause the maximum damage to the specimen.

To set up a package for the puncture test:

1. Measure and record the weight of the package.
2. Measure and record the specimen's internal and surface temperature, and ensure that the package is at or below -40° C.
3. Position the unit according to the appropriate orientation:

   For Specimens A and C, refer to Figure 8 on Page 18.

   For Specimens B and D, refer to Figure 9 on Page 19.
4. Check the alignment of the specified center-of-gravity marker with the targeted point of impact.
5. Raise the package so that there is 40 to 42 inches between the package and the top of the puncture billet.

6.4.2 Orientation for the Puncture Test: Specimens A & C

The orientation for Specimens A and C (Figure 8) targets the bottom edge of the rear end-plate to distort the end plate and possibly loosen or shear the end-plate screws.

The bottom edge provides the largest unobstructed flat surface on the plate. The impact will crush the bottom of the end plate into the polyurethane foam, the softest material in the package, and cause the maximum distortion of the plate. Attacking the top edge was rejected because the flat surface area is less than half that of the bottom edge and the carrying handle would deflect much of the energy.

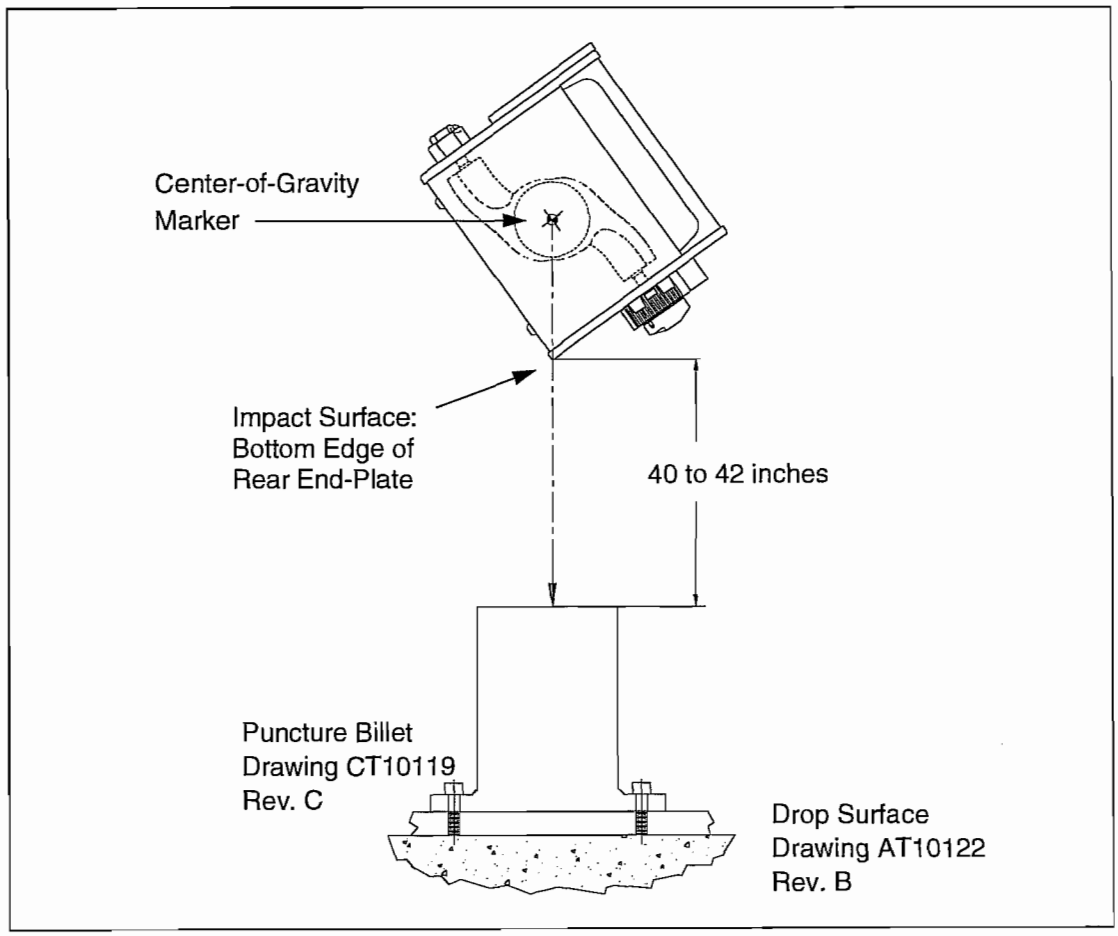

Figure 8: Orientation for the Puncture Test: Specimens A & C

6.4.3 Orientation for the Puncture Test: Specimens B & D

For Specimen B and D, the puncture test impact point is the lower left corner of the rear end-plate (Figure 9). This orientation continues the attack on the bottom left screw on the rear end plate that was inflicted with the penetration test and the two free drops. The impact will also have the effect of increasing any gap between the end plate and the shell caused by the previous tests.

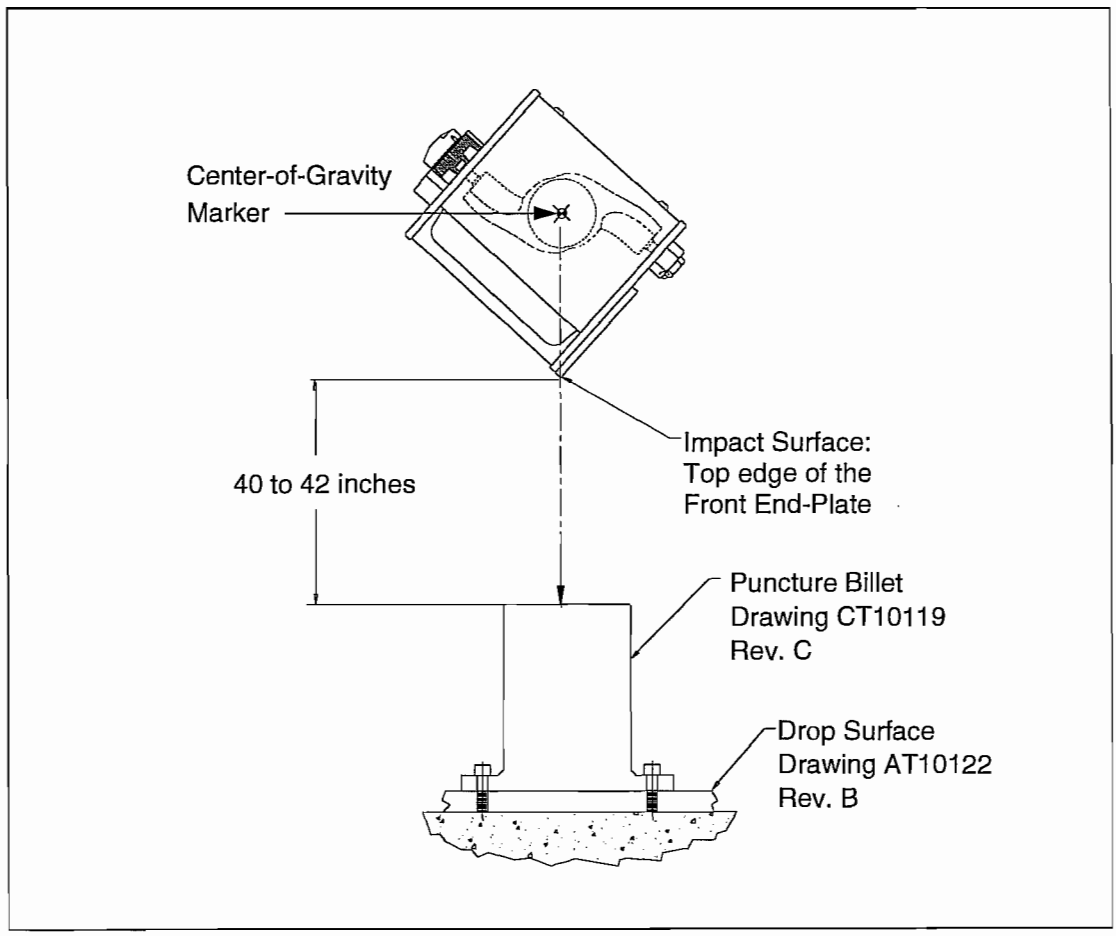

Figure 9: Orientation for the Puncture Test: Specimens B & D

6.4.4 Puncture Test Assessment

Upon completion of the test, Engineering, Regulatory Affairs and Quality Assurance team members will jointly perform the following tasks:

- Review the test execution to ensure that the test was performed in accordance with 10 CFR 71.73.
- Make a preliminary evaluation of the specimen relative to the requirements of 10 CFR 71.73.
- Assess the damage to the specimen to decide whether testing of that specimen is to continue.
- Evaluate the condition of the specimen to determine whether the thermal test should be performed with the specimen.
- Evaluate the condition of the specimen to determine the package orientation for the thermal test to achieve maximum damage.

As part of the evaluation, measure the weight of the specimen.

6.5 Intermediate Test Inspection

Perform an intermediate test inspection after the puncture test.

1. Measure and record any damage to the test specimen.
2. If a source can be installed without affecting the integrity of the test specimen, profile the package using an active source in accordance with Amersham Work Instruction WI-Q09.
3. Assess the significance of any change in radiation at the surface or at one meter from the package.

6.6 Thermal Test (10 CFR 71.73(c)(4))

The final requirement is the thermal test specified in 10 CFR 71.73(c)(4).

To ensure sufficient heat input to the test specimens, each specimen will be pre-heated to a temperature of at least 800° C and held to at least that temperature for 30 minutes. This test condition provides heat input in excess of the requirements specified in 10 CFR 71.73(c)(4), which does not include a pre-heat condition. The pre-heat condition assures equivalent heat input regardless of emissivity and absorptivity coefficients.

The test environment is a vented electric oven operating greater than 800° C. There will be sufficient air flow to allow combustion. Air will be forced into the oven at a minimum rate of 9.6 cubic feet per minute to ensure sufficient oxygen to fully combust all package materials that are capable of burning. This rate is based on the following analysis:

1. The only combustible material in the TP73 is the polyurethane foam.
2. The chemical composition of polyurethane is $[C_{26}H_{33}NO_{13}]_n$.
3. The products of combustion are carbon dioxide (CO_2) and water (H_2O) and the molecular weights of the component materials are:

   C = 12 H = 1 O = 16 N = 14
4. The maximum mass of the polyurethane in a TP73 is 988 grams. The maximum amounts of carbon and hydrogen present in the polyurethane are computed as follows:

Polyurethane	C_{26}	H_{33}	N	O_{13}
Molecular Weight	(26x12) +	(33x1)+	(1x14)+	(13x16)
567 =	312 +	33 +	14 +	208
Percent by Mass	55.0%	5.8%	2.5%	36.7%
988 g =	543g +	57g +	25g +	363g

5. The amount of oxygen required to fully combust the carbon to carbon dioxide is computed as follows:

Carbon Dioxide	C	O_2
Molecular Weight	(1x12) +	(2x16)
44 =	12 +	32

For a given mass of carbon, 32/12 = 2.67 times that mass of oxygen is required to fully combust the carbon to carbon dioxide. For a TP73 containing 543 grams of carbon, full combustion would require 1450 grams of oxygen.

6. The amount of oxygen required to fully convert the hydrogen to water is computed as follows:

Water	H_2	O
Molecular Weight	(2x1) +	16
18 =	2 +	16

For a given mass of hydrogen, 16/2 = 8 times that mass of oxygen is required to fully convert the hydrogen to water. For a TP73 with 57 grams of hydrogen, full combustion would require 456 grams of oxygen.

7. The sum of these oxygen requirements (1450g + 456 g) less the oxygen supplied by the polyurethane (-363 g) equals 1543 grams of oxygen to assure sufficient oxygen to burn the polyurethane foam. At standard conditions, the composition of air is 23.2% oxygen by mass[1]. Therefore, 6650 grams of air are required.

8. The volume of air is computed at a density of 1.225 grams/liter to be 192 cubic feet:

   $6650g/1.225g/l = 5430\ l = 5.43m^3 = 192\ ft^3$

9. A 50% safety factor is added and the volume is distributed over the 30-minute test period to determine a minimum air flow rate of 9.6 cubic feet per minute:

   $(192\ ft^3)\ (1.5)\ /\ 30\ min. = 9.6\ ft^3/min.$

The air will be introduced as compressed air passing through a flowmeter and into the oven via metal tubing. A sufficient length of tubing will be inside the oven to ensure sufficient preheating.

The temperature of the package's exterior surface closest to the air entry point will be monitored throughout the test to ensure that the package remains above 800° C.

If the specimen is burning when it is removed, the unit is allowed to extinguish by itself and then cool naturally. The final evaluation of the package is performed when the specimen reaches ambient temperature.

1. Avallone, Eugene A., and Theodore Baumeister III, Editors, *Marks' Standard Handbook for Mechanical Engineers*, Ninth Edition (New York: McGraw-Hill Book Company, 1987), page 4-27

6.6.1 Thermal Test

To perform the thermal test:

1. Bring the oven temperature above 800° C.
2. Attach thermocouples to the package's internal and external measurement locations, and inside the oven.
3. Place the package in the oven and close the door.
4. When the internal temperature of the package goes above 800° C, start air flow and start a 30-minute timer.
5. Measure and record the oven temperature, test specimen internal and external temperatures, and the air flow rate. Record whether there is any combustion.
6. Monitor the specimen's internal and external temperatures, and the oven temperature throughout the 30-minute test period to ensure that all temperatures remain above 800° C.
7. Monitor the airflow rate throughout the test period to ensure that it remains above 9.6 ft^3/minute.
8. At the end of the 30 minutes, repeat Step 5.
9. Remove the test specimen from the oven.
10. Allow the package to self-extinguish and cool.

6.6.2 Thermal Test Assessment

Upon completion of the test, Engineering, Regulatory Affairs and Quality Assurance team members will jointly perform the following task:

- Review the test execution to ensure that the test was performed in accordance with 10 CFR 71.

6.7 Final Test Inspection

Perform the following inspections after completion of the thermal test:

1. Measure and record any damage to the test specimen.
2. Profile the package using an active source in accordance with Amersham Work Instruction WI-Q09.
3. Assess the significance of any change in radiation at one meter from the package.
4. Determine whether it is necessary to dismantle the test specimen for inspection of hidden component damage or failure.
5. If you decide to proceed with the inspection, record and photograph the process of removing any component.
6. Measure and record any damage or failure found in the process of dismantling the test specimen.

6.8 Final Assessment

Engineering, Regulatory Affairs, and Quality Assurance team members will make a final assessment of the test specimen, and jointly determine whether the specimen meets the requirements of 10 CFR 71.73.

7.0 Worksheets

Use the following worksheets for executing these tests. There are two worksheets for each test: an equipment list and a test procedure checklist.

Use the test equipment list to record the serial number of each measurement device used. Attach a copy of the relevant inspection report or calibration certificate after you have verified the range and accuracy of the equipment.

Quality Control will initial each step on the checklist as it is executed and record data as required. The Engineering, Regulatory Affairs and Quality Assurance representatives must witness all testing to ensure the testing is performed in accordance with this test plan and 10 CFR 71.

Make copies of the forms for additional attempts. Maintain records of all attempts.

Equipment List 1: 30-foot Free Drop

Description	Enter the Model and Serial Number	Attach Inspection Report or Calibration Certificate
Drop Surface, Drawing AT10122, Rev. B		
Weight Scale		
Thermometer		
Thermocouple flexible probe		
Thermocouple surface probe		
Record any additional tools used to facilitate the test and attach the appropriate inspection report or calibration certificate.		
Verified by:	Signature	Date
Engineering		
Regulatory Affairs		
Quality Assurance		

Checklist 1: 30-foot Free Drop

Test Location: **Attempt Number:**

Step	Specimen A	Specimen B	Specimen C	Specimen D
1. Measure and record test specimen's weight.				
Record the specimen's weight:				
Note the instrument used:				
2. Immerse the test specimen in dry ice as needed to bring specimen temperature below -40° C.				
Steps 1 through 2 witnessed by:				
Engineering				
Regulatory Affairs				
Quality Assurance				
3. Measure the ambient temperature.				
Record ambient temperature:				
Note the instrument used:				
4. Attach the test specimen to the release mechanism.				
5. Begin video recording of test so that the impact is recorded.				
6. Measure the temperature of the specimen. Ensure that the specimen is below -40° C.				
Record the specimen's internal temperature:				
Note the instrument used:				
Record the specimen's surface temperature.				
Note the instrument used:				
7. Lift and orient the test specimen as shown in the referenced figure for the specimen.	Figure 6 on Page 14	Figure 7 on Page 15	Figure 6 on Page 14	Figure 7 on Page 15
8. Inspect the orientation setup and verify the drop height.				
9. Photograph the setup in at least two perpendicular planes.				

Checklist 1: 30-foot Free Drop (Continued)

Test Location: **Attempt Number:**

Step	Specimen A	Specimen B	Specimen C	Specimen D
Steps 3 through 9 witnessed by:				
Engineering				
Regulatory Affairs				
Quality Assurance				
10. Release the test specimen.				
11. Measure the surface temperature of the test specimen.				
Record the surface temperature:				
Note the instrument used:				
12. Measure and record the test specimen's weight.				
Record the specimen's weight:				
Note the instrument used:				
13. Pause the video recorder. Ensure that the point of impact and orientation specified in the plan have been achieved and recorded.				
14. Record damage to test specimen on a separate sheet and attach.				
Steps 10 through 14 witnessed by:				
Engineering				
Regulatory Affairs				
Quality Assurance				

Checklist 1: 30-foot Free Drop (Continued)

Test Location: **Attempt Number:**

Step	Specimen A	Specimen B	Specimen C	Specimen D
15. Engineering, Regulatory Affairs and Quality Assurance make a preliminary assessment relative to 10 CFR 71. Record the assessment on a separate sheet and attach. Determine what changes are necessary in package orientation for the puncture test to achieve maximum damage.				

Test Data Accepted by (Signature):	Date:
Engineering	
Regulatory Affairs	
Quality Assurance	

Equipment List 2: Puncture Test

Description	Enter the Model and Serial Number	Attach Inspection Report or Calibration Certificate
Drop Surface, Drawing AT10122, Rev. B		
Puncture Billet, Drawing CT10119, Rev. C		
Weight Scale		
Thermometer		
Thermocouple flexible probe		
Thermocouple surface probe		
Record any additional tools used to facilitate the test and attach the appropriate inspection report or calibration certificate.		

Verified by:	Signature	Date
Engineering		
Regulatory Affairs		
Quality Assurance		

Checklist 2: Puncture Test

Test Location: **Attempt Number:**

Step	Specimen A	Specimen B	Specimen C	Specimen D
1. Immerse the test specimen in dry ice as need to bring the specimen's temperature below -40^{0} C.				
Step 1 witnessed by:				
Engineering				
Regulatory Affairs				
Quality Assurance				
2. Measure the weight of the specimen.				
Record the specimen's weight:				
Note instrument used:				
3. Measure the ambient temperature.				
Record ambient temperature:				
Note the instrument used:				
4. Attach the test specimen to the release mechanism.				
5. Begin video recording of test so that the impact is recorded.				
6. Measure the surface temperature of the specimen. Ensure that the specimen is below -40° C.				
Record the specimen surface temperature:				
Note the instrument used:				
7. Lift and orient the test specimen as shown in the referenced figure for the specimen.	Figure 8 on Page 18	Figure 9 on Page 19	Figure 8 on Page 18	Figure 9 on Page 19
8. Inspect the orientation setup and verify drop height.				

Checklist 2: Puncture Test (Continued)

Test Location: **Attempt Number:**

Step	Specimen A	Specimen B	Specimen C	Specimen D
9. Photograph the setup in at least two perpendicular planes.				
Steps 2 through 9 witnessed by:				
Engineering				
Regulatory Affairs				
Quality Assurance				
10. Release the test specimen.				
11. Measure the surface temperature of the test specimen.				
Record the surface temperature:				
Note the instrument used:				
12. Measure and record the test specimen's weight.				
Record the specimen's weight:				
Note the instrument used:				
13. Pause the video recorder. Ensure that the point of impact and orientation specified in the plan have been achieved and recorded.				
14. Record damage to test specimen on a separate sheet and attach.				
Steps 10 through 14 witnessed by:				
Engineering				
Regulatory Affairs				
Quality Assurance				

Checklist 2: Puncture Test (Continued)

Test Location: **Attempt Number:**

Step	Specimen A	Specimen B	Specimen C	Specimen D
15. Engineering, Regulatory Affairs and Quality Assurance make a preliminary assessment relative to 10 CFR 71. Record the assessment on a separate sheet and attach. Determine the package orientation for the thermal test that will achieve maximum damage.				

Test Data Accepted by (Signature):	Date:
Engineering	
Regulatory Affairs	
Quality Assurance	

Equipment List 3: Thermal Test

Description	Enter the Model and Serial Number	Attach Inspection Report or Calibration Certificate
Air Flowmeter		
Thermocouple (internal)		
Thermocouple (external)		
Thermocouple (oven)		
Temperature recorder		
Record any additional tools used to facilitate the test and attach the appropriate inspection report or calibration certificate.		
Verified by:	Signature	Date
Engineering		
Regulatory Affairs		
Quality Assurance		

Checklist 3: Thermal Test

Test Location: **Attempt Number:**

Step	Specimen A	Specimen B	Specimen C	Specimen D
1. Pre-heat the oven to a temperature above 800° C.				
2. Attach the thermocouples the specimen's internal and external measuring points.				
3. Place the package in the oven and close the oven door.				
Record the date and time that the package is placed in oven.				
4. When the specimen's internal temperature exceeds 800° C, start the air flow into the oven. Record the time.				
Steps 1 through 4 witnessed by:				
Engineering				
Regulatory Affairs				
Quality Assurance				
5. Measure the oven temperature, the specimen's internal and external temperatures and the air flow rate.				
Record the oven temperature:				
Note instrument used:				
Record the specimen's internal temperature:				
Note instrument used:				
Record the specimen's external temperature:				
Note instrument used:				
Record airflow rate:				
Note instrument used:				
6. Monitor the internal and external temperatures of the specimen and the oven temperature throughout the 30-minute period to ensure that they are above 800° C.				

Checklist 3: Thermal Test (Continued)

Test Location: **Attempt Number:**

Step	Specimen A	Specimen B	Specimen C	Specimen D
7. Monitor the airflow throughout the 30-minute period to ensure a rate of at least 9.6 ft^3/min.				
8. At the end of the 30-minute period, repeat step 5 using the same measurement devices.				
Record the oven temperature:				
Record the specimen's internal temperature:				
Record the specimen's external temperature:				
Record intake air flow velocity:				
Steps 5 through 8 witnessed by:				
Engineering				
Regulatory Affairs				
Quality Assurance				
9. Remove test specimen from the oven.				
Record time the specimen is removed.				
Describe combustion when door is opened to remove specimen.				
NOTE: If specimen continues to burn, let it self-extinguish and cool naturally.				
10. Measure the ambient temperature.				
Record the ambient temperature:				
Note the instrument used:				
11. Photograph the test specimen and any subsequent damage				
12. Record damage to test specimen on a separate sheet and attach.				
Steps 9 through 12 witnessed by:				
Engineering				
Regulatory Affairs				
Quality Assurance				

Checklist 3: Thermal Test (Continued)

Test Location: **Attempt Number:**

Step	Specimen A	Specimen B	Specimen C	Specimen D
13. Engineering, Regulatory Affairs and Quality Assurance make a preliminary assessment relative to 10 CFR 71. Record the assessment on a separate sheet and attach.				

Test Data Accepted by (Signature):	Date:
Engineering	
Regulatory Affairs	
Quality Assurance	

Appendix A: Drawings

Test Specimen
TP73, Rev. A

Model 660 Gamma Ray Projector Shipping Container Descriptive Assembly
C66025, Rev. F (3 sheets)

Model 660 Gamma Ray Projector Shipping Container Descriptive Assembly
C66025, Rev. B (4 sheets)

Model 660 Gamma Ray Projector Shipping Container Descriptive Assembly
C66030, Rev. D (3 sheets)

Model 660 Gamma Ray Projector Shipping Container Descriptive Assembly
C66030, Rev. A (3 sheets)

Model 660 Gamma Ray Projector Shipping Container Descriptive Assembly
C66030, Rev. – (4 sheets)

REV	REVISED BY	DATE	DESCRIPTION	ECO#
A	SEE TITLE	BLOCK	RELEASE FOR PRODUCTION	2382

NOTES

1. MATERIAL:

1.1. MANUFACTURE PER D66010 REV. D, EXCEPT REPLACE ENDPLATE SCREWS SCR001 WITH A66050-1 REV. A. AND SHIELD ASSEMBLY C66002, REV. 0 MAY BE REPLACED WITH C66040-5, REV. A.

1.2. INSTALL DUMMY SOURCE ASSEMBLY AT10161, REV. B

2. WEIGHT:

2.1. USE DU SHIELDS WEIGHING 37 TO 39 POUNDS.

2.2. TEST UNIT SHALL WEIGH 54 TO 56 POUNDS.

2.3. ADD 1 TO 2 POUNDS OF LEAD (1/4 THICK MAX) TO THE DU SHIELD. DISTRIBUTE THE LEAD SYMMETRICALLY AND ATTACH WITH GLASS TAPE. TOTAL SHIELD ASSEMBLY WEIGHT MUST NOT EXCEED 40 POUNDS.

2.4. PHOTOGRAPH COMPLETED SHIELD ASSEMBLY WITH LEAD APPLIED.

3. LABELING AND IDENTIFICATION:

3.1. COVER TYPE B(U) LABEL INFORMATION WITH AN OPAQUE LABEL. MARK THE OPAQUE LABEL "TP73 TEST SPECIMEN".

3.2. PERMANENT MARK BY HAND EACH: TEST SPECIMEN, SHIPPING PLUG AND DUMMY SOURCE ASSEMBLY WITH "TP73A", "TP73B", "TP73C", "TP73D", "TP73S1", & "TP73S2".

4. CENTER OF GRAVITY DETERMINATION INSTRUCTION. REF: MARKS' STANDARD HANDBOOK FOR MECHANICAL ENGINEERS, NINTH EDITION (MCGRAW-HILL BOOK COMPANY,1987), PAGE 3-8.

4.1 SUSPEND THE TEST SPECIMEN BY A CORD OR CABLE.

4.2. ATTACH A (PLUMB BOB) TO THE TEST SPECIMEN AT THE SUSPENDED ATTACHMENT POINT.

4.3. WAIT UNTIL THE TEST SPECIMEN COMES TO REST.

4.4. MARK A LINE ON THE TEST SPECIMEN ALONG THE PLUMB BOB.

4.5. REMOVE THE TEST SPECIMEN FROM ITS SUSPENSION POINT.

4.6. HANG THE TEST SPECIMEN FROM SOME OTHER ANGULAR ORIENTATION BUT IN THE SAME PLANE.

4.7. REPEAT STEPS 4.2 THROUGH 4.5.

4.8. INDICATE THE CENTER OF GRAVITY LOCATION AT THE INTERSECTION OF THE TWO MARKED LINES.

4.9. REPEAT STEPS 4.1 THROUGH 4.8 FOR ALL 4 SIDES OF THE TEST SPECIMEN (TOP & BOTTOM NOT REQUIRED).

5. ATTACHMENT POINTS:

5.1. USE THE ORIENTATION FIGURES OF THE TEST PLAN TO LOCATE ANY ATTACHMENT POINTS ON THE TEST UNIT, IF NEEDED.

5.2. ATTACHMENT POINTS SHALL NOT INTERFERE WITH THE CENTER OF GRAVITY LOCATION OR AFFECT THE PERFORMANCE OF THE TEST UNIT DURING TESTING.

5.3. ATTACHMENT POINT SIZE AND LOCATION SHALL BE DOCUMENTED BEFORE TESTING CAN PROCEED.

5.4. ADHESIVE, HOOKS, AND STRAPS TO BE DETERMINED BY ENGINEERING PRIOR TO TEST.

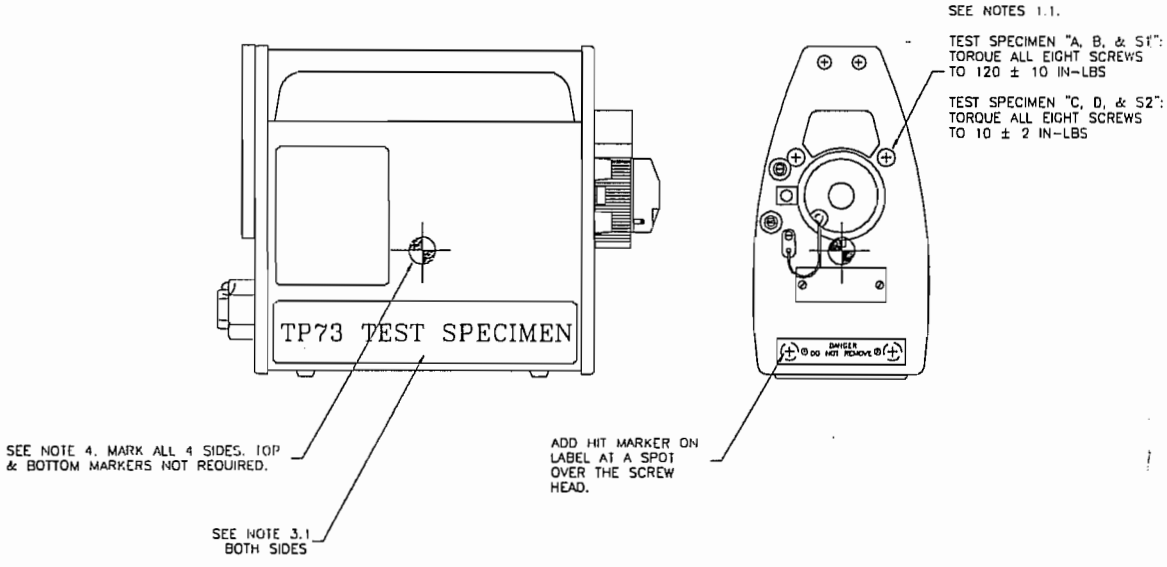

THIS DRAWING IS THE EXCLUSIVE PROPERTY OF AMERSHAM CORPORATION. IT MAY ONLY BE USED FOR THE PURPOSE FOR WHICH IT WAS ISSUED. IT MAY NOT BE DUPLICATED IN ANY WAY, NOR TRANSMITTED TO ANY THIRD PARTY WITHOUT THE EXPRESS PERMISSION OF AMERSHAM CORPORATION.

USED ON:	TEST PLAN #73	AMERSHAM CORPORATION BURLINGTON, MA 01803	SENTINEL
MATERIALS:	SEE NOTE 1	DWG. TITLE	
SURFACE TEXTURE: 63/ UNLESS OTHERWISE STATED		MODEL 660 TEST SPECIMEN	
FINISH: FINISH	UNLESS OTHERWISE NOTED DIMENSIONS ARE IN INCHES TOLERANCES ARE:		
REMOVE ALL BURRS	.X ± 0.1		
	.XX ± 0.01		
DRAWN	APPROVED DRAWING ON FILE	.XXX ± 0.005	SAFETY CLASS A / SIZE C / DWG. NO. TP73 / REV A
CHECKED		ANGLES ± 1°	
APPROVED		FRACT ± 1/64	SCALE NONE / SHEET 1 OF 1

E	7/13/93	SEE ECO 1222	TA
F	3/20/94	SEE ECO 1222	RM

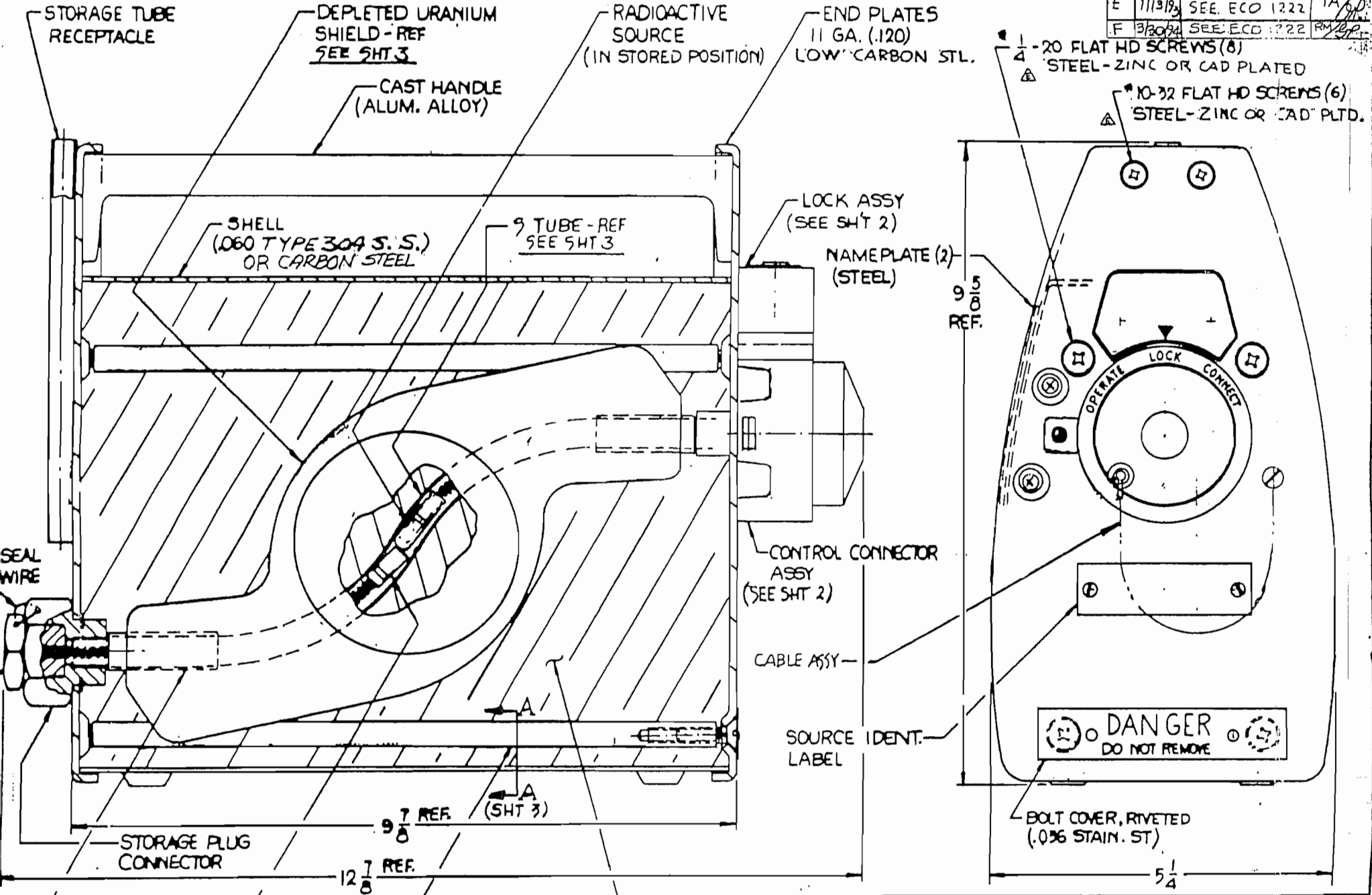

MOD NO.	MAX CAPACITY
660 B	140 CI

TOTAL WEIGHT - 53 LBS ± 3 lbs.

MATERIAL: NOTED

FINISH:

DRAWN BY: J. Tinsley

CHECKED BY:

APPROVED BY: 23 Jan 74

[redacted]

TECHNICAL OPERATIONS INC.
RADIATION PRODUCTS DIVISION
BURLINGTON, MA 01803

DWG TITLE: MODEL 660 GAMMA RAY PROJECTOR SHIPPING CONTAINER DESCRIPTIVE ASSEMBLY

CLASSIFICATION: | SIZE: C | DWG. NO. 66025 | REV. F

SCALE: 1:1 | SHEET 1 OF 3

66025

E	1/13/93	SEE ECO 1222	
F	3/30/94	SEE ECO 1222 RM	

A	6 JUN 79	SEE SHT 1	
B	18 APR 84	WAS SHT 2 OF 3	
C	11-21-89	SEE SHT 1 & THIS SHT WAS SHT 2 OF 3	
D	4-9-90	SEE SHT 3	

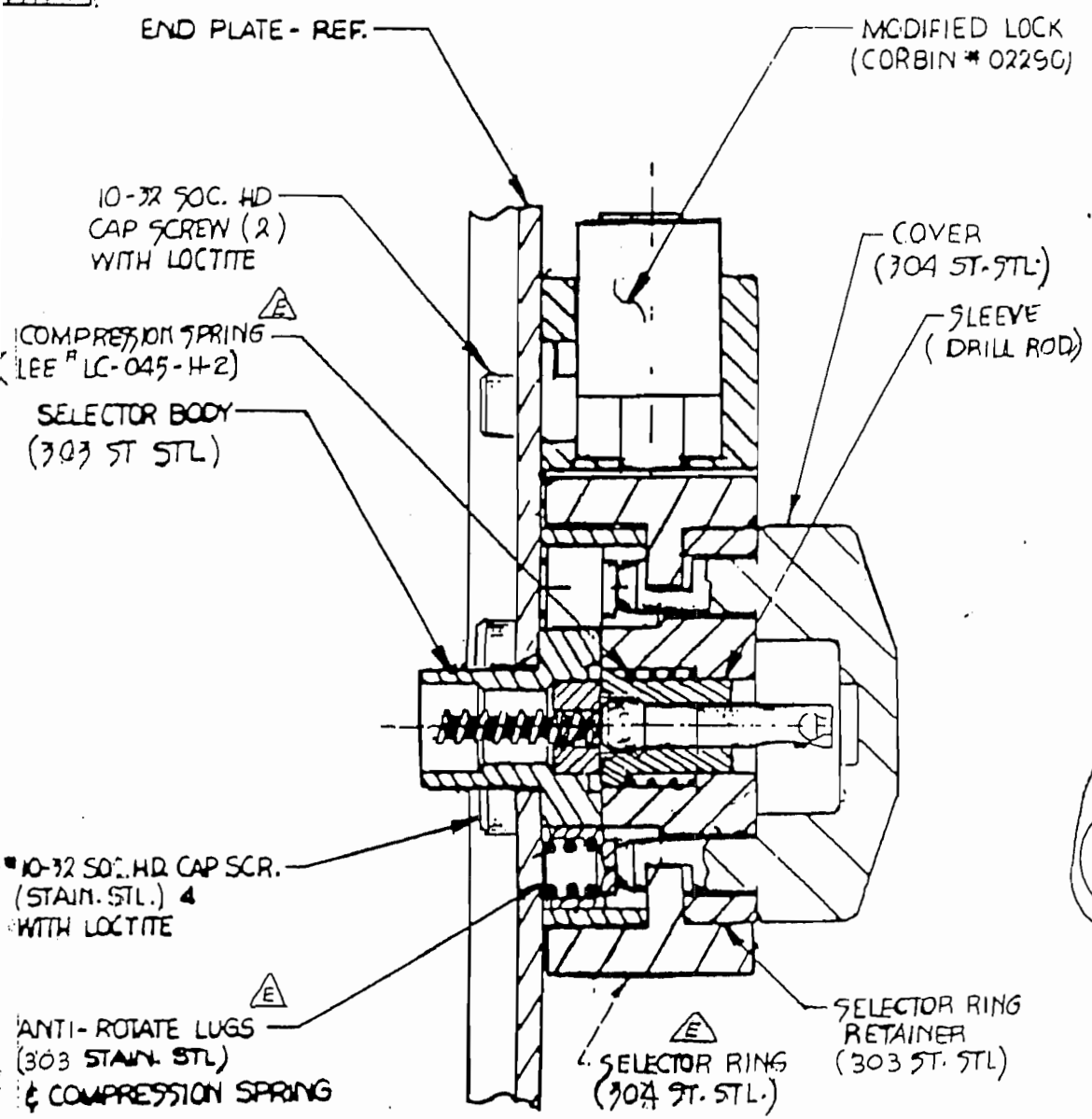

LOCK ASSEMBLY

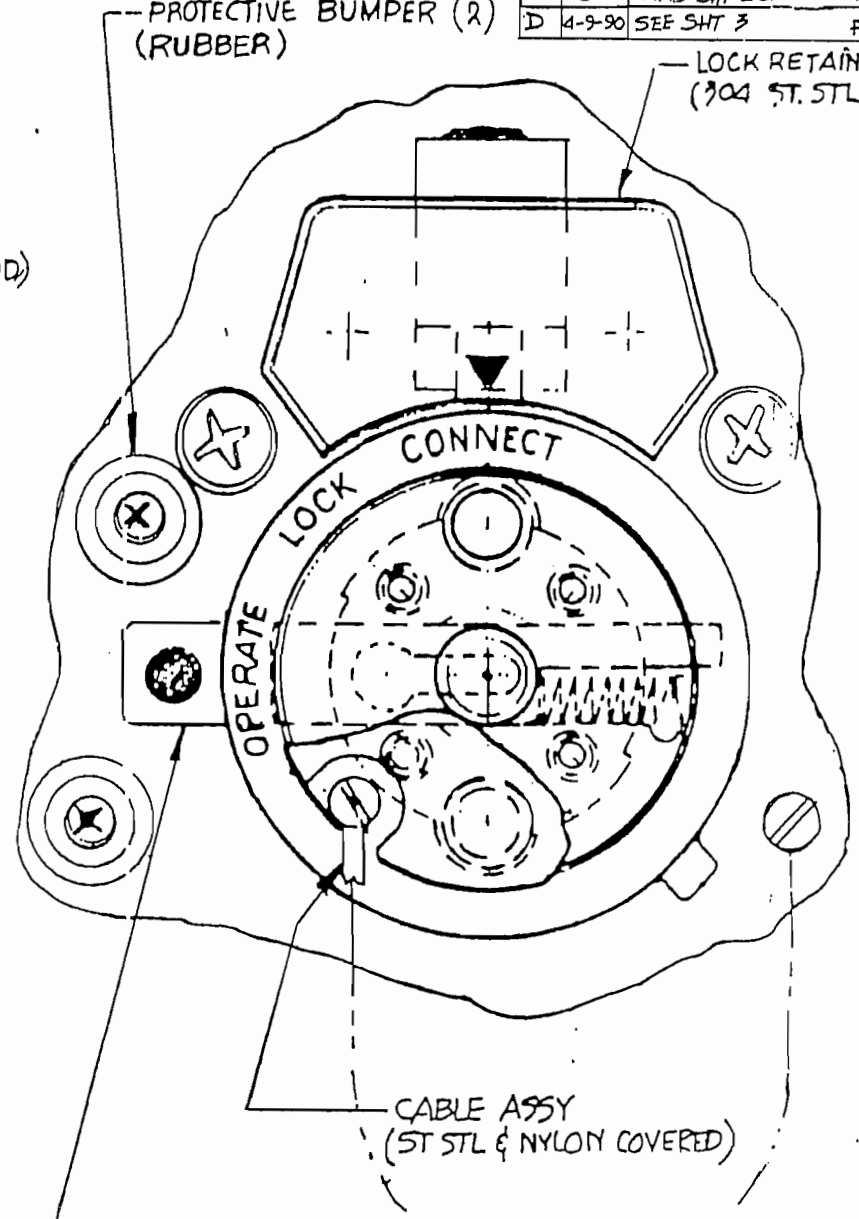

LOCKING SLIDE (1/4 x 1/2 FLAT GND STOCK OIL HARDENING)

MATERIALS: NOTED	TECHNICAL OPERATIONS INC. RADIATION PRODUCTS DIVISION BURLINGTON, MA. 01803
FINISH: —	DWG TITLE: MODEL 660 GAMMA RAY PROJECTOR SHIPPING CONTAINER DESCRIPTIVE ASSEMBLY
DRAWN BY	UNLESS OTHERWISE SPECIFIED TOLERANCES ARE: .X ±, .XX ±, .XXX ±, ANGLES ±, FRACTIONS ±
CHECKED BY	CLASSIFICATION / SIZE C / DWG. NO. 66025 / REV. F
APPROVED BY 23 SEP 96	SCALE 2:1 / SHEET 2 OF 3

C	11-22-89	WAS SHT 4 OF 4 & REV OF THIS SHT WAS — & ADDED SECT. A-A
D	9-4-90	ADDED "WELDED & INSPECTED IN ACCORDANCE WITH - - -" WAS "(MIL-W-6858)" E.C.O. # 718
E	1-13-93	SEE ECO 1222
F	3/30/94	ADDED 'LEAD' TO NOTE PER ECO 1222

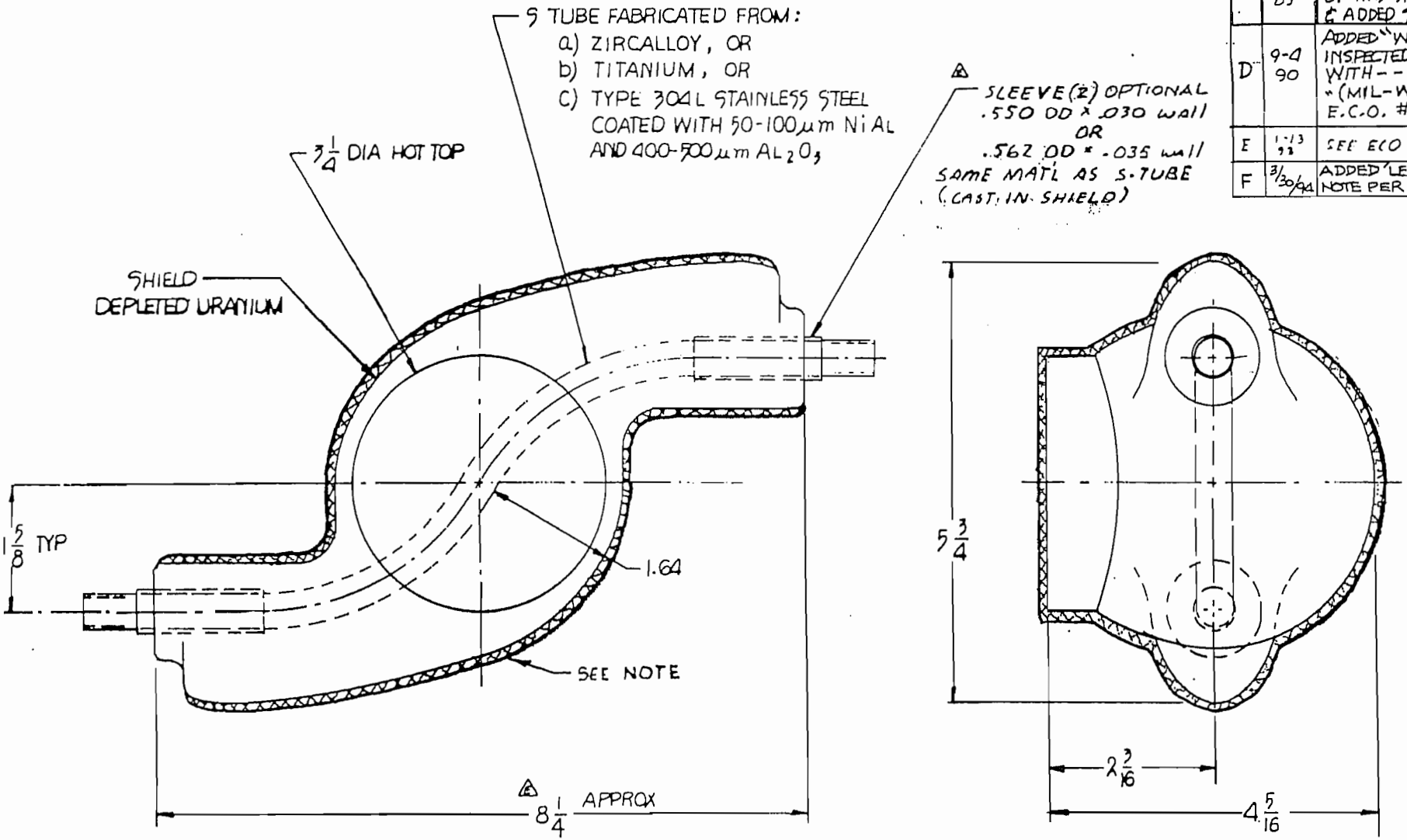

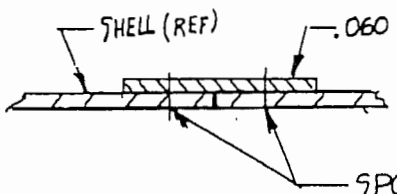

SECTION A-A

SCALE: 1/1

D

SHIELD DATA

37 LBS ± 3 lbs. E

NOTE: ADDITIONAL LEAD SHIELDING NOT TO EXCEED 3 lbs. MAX. THICKNESS 1/4". TUNGSTEN NOT SHOWN. F

MATERIALS: AS NOTED	Tech-Ops, Inc. RADIATION PRODUCTS DIVISION BURLINGTON, MA 01803	
FINISH	DWG TITLE: MODEL 660 GAMMA RAY PROJECTOR SHIPPING CONTAINER DESCRIPTIVE ASSEMBLY	
DRAWN BY	UNLESS OTHERWISE SPECIFIED TOLERANCES ARE: X, XX, XXX, ANGLES, FRACTIONS	
CHECKED BY		
APPROVED BY		
CLASSIFICATION	SIZE C	DWG. NO. 66025 REV. E
SCALE 1:1	SHEET 3 OF 3	

C66025

REV.	DATE	DESCRIPTION	
A	6 JUN 79	ADDED GENERAL HYPO.	F
B	4-18-84	ADDED SHT 4, ST. STL. OPTION ADDED FOR 5 TUBE & SLEEVES	F

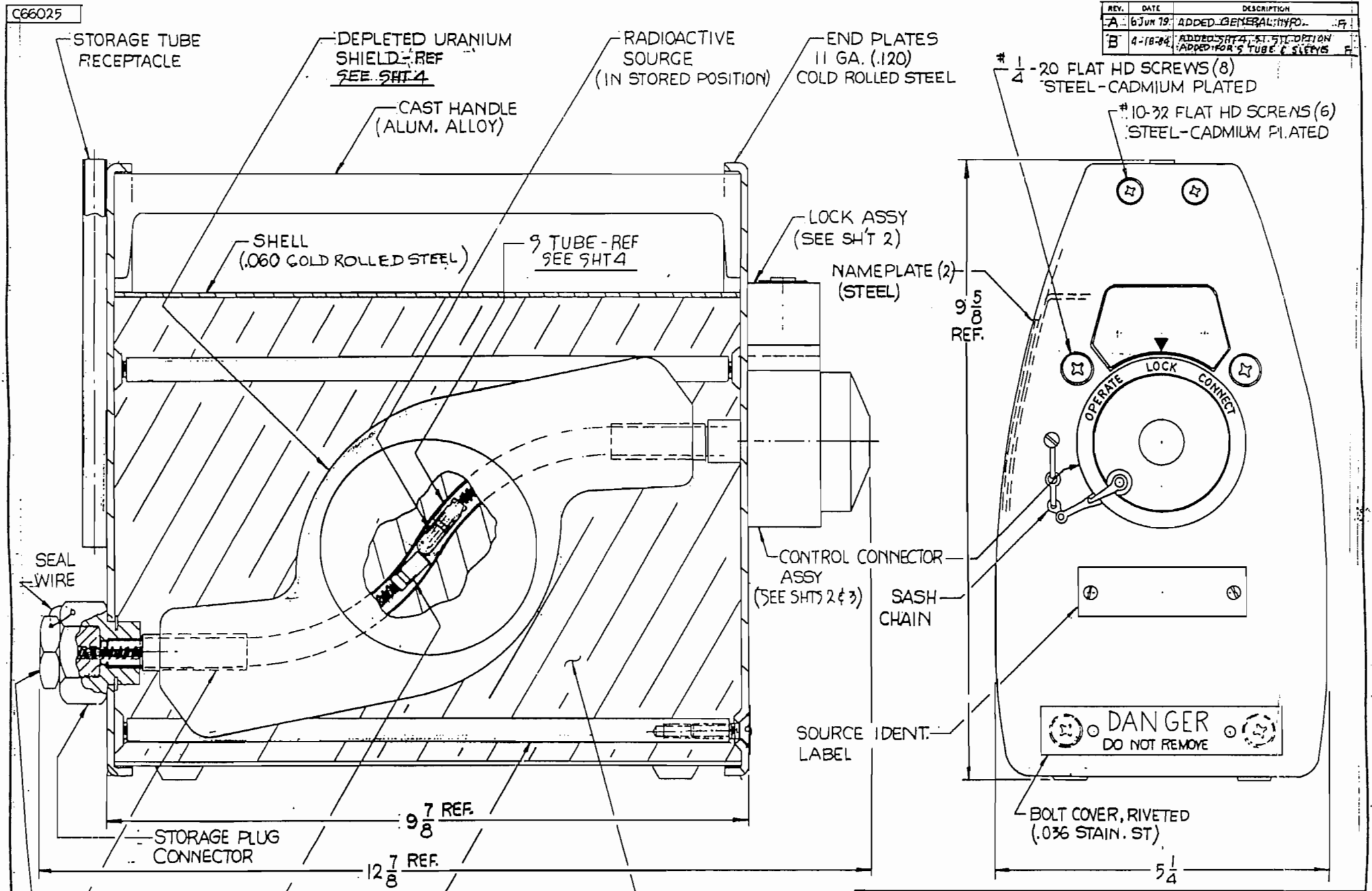

MOD. NO.	MAX CAPACITY
660	120 CI

TOTAL WEIGHT-48 LBS

MATERIALS: NOTED	TECHNICAL OPERATIONS INC. RADIATION PRODUCTS DIVISION BURLINGTON, MA 01803	
FINISH	DWG. TITLE: MODEL 660 GAMMA RAY PROJECTOR SHIPPING CONTAINER DESCRIPTIVE ASSEMBLY	
DRAWN BY: J. Tinkly 6-20-78	UNLESS OTHERWISE SPECIFIED TOLERANCES ARE: X ±, XX ±, XXX ±, ANGLES ±, FRACTIONS ±	
CHECKED BY		
APPROVED BY	CLASSIFICATION	SIZE: C; DWG. NO.: 66025; REV.: B
	SCALE: 1:1	SHEET 1 OF 4

C66025

A	6 JUN 79	SEE SHT 1
B	18 APR 84	WAS SHT 2 OF 3

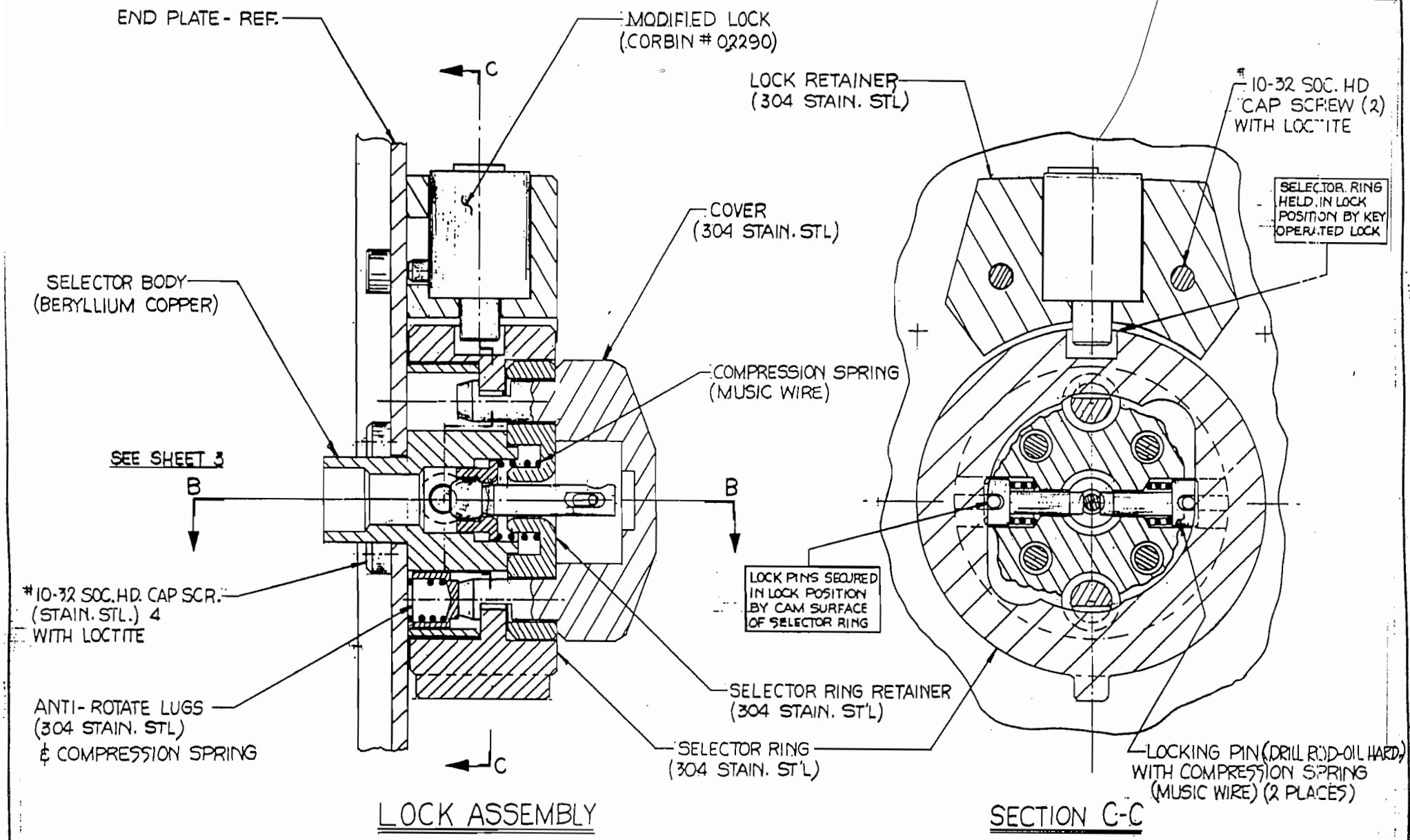

LOCK ASSEMBLY

SECTION C-C

MATERIALS: NOTED	[redacted]	TECHNICAL OPERATIONS INC. RADIATION PRODUCTS DIVISION BURLINGTON, MA. 01803
FINISH		DWG TITLE: MODEL 660 GAMMA RAY PROJECTOR SHIPPING CONTAINER DESCRIPTIVE ASSEMBLY
DRAWN BY: J. Trophy 6-27-78	UNLESS OTHERWISE SPECIFIED TOLERANCES ARE: .X ±, .XX ±, .XXX ±, ANGLES ±, FRACTIONS ±	
CHECKED BY		CLASSIFICATION:	SIZE: C	DWG. NO. 66025	REV. B
APPROVED BY		SCALE 2:1	SHEET 2 OF 4

66025

REV.	DATE	DESCRIPTION	
A	6 JUN 79	ADDED GENERAL NOTE	F
B	4-18-84	ADDED SHT 4, SH. STL OPTION ADDED FOR S TUBE & SLEEVES	F

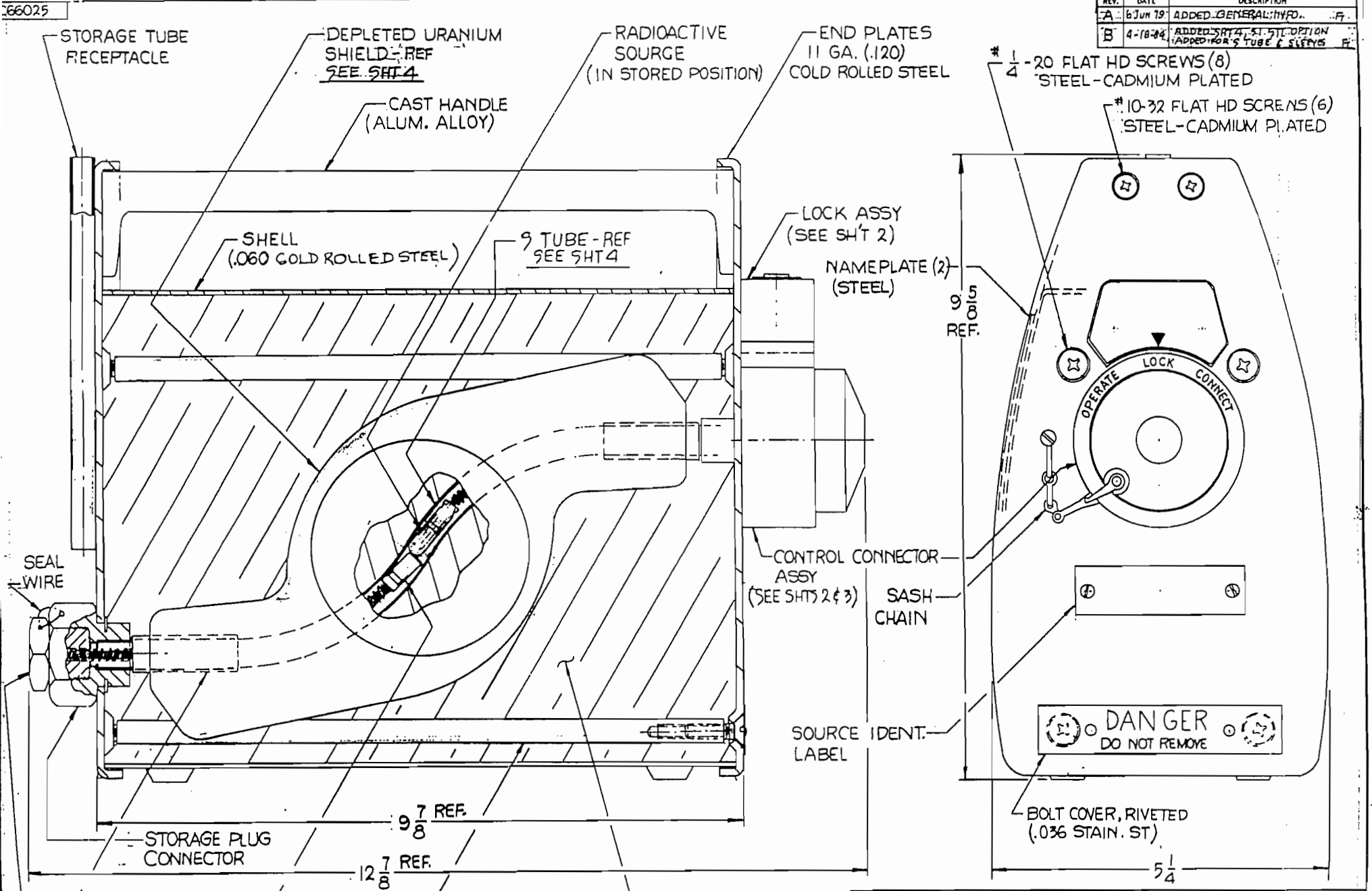

MOD. NO.	MAX CAPACITY
660	120 CI

MATERIALS	NOTED
FINISH	
DRAWN BY	
CHECKED BY	
APPROVED BY	
UNLESS OTHERWISE SPECIFIED TOLERANCES ARE	.X ± .XX ± .XXX ± ANGLES ± FRACTIONS ±

TECHNICAL OPERATIONS INC.
RADIATION PRODUCTS DIVISION
BURLINGTON, MA 01803

DWG TITLE
MODEL 660 GAMMA RAY PROJECTOR
SHIPPING CONTAINER
DESCRIPTIVE ASSEMBLY

CLASSIFICATION	SIZE	DWG. NO.	REV.
	C	66025	B

SCALE 1:1 SHEET 1 OF 4

C66025

REV.	DATE	DESCRIPTION	
A	6 JUN 79	SEE SHT 1	FOT.
B	18 APR 84	WAS SHT 3 OF 3	FT.

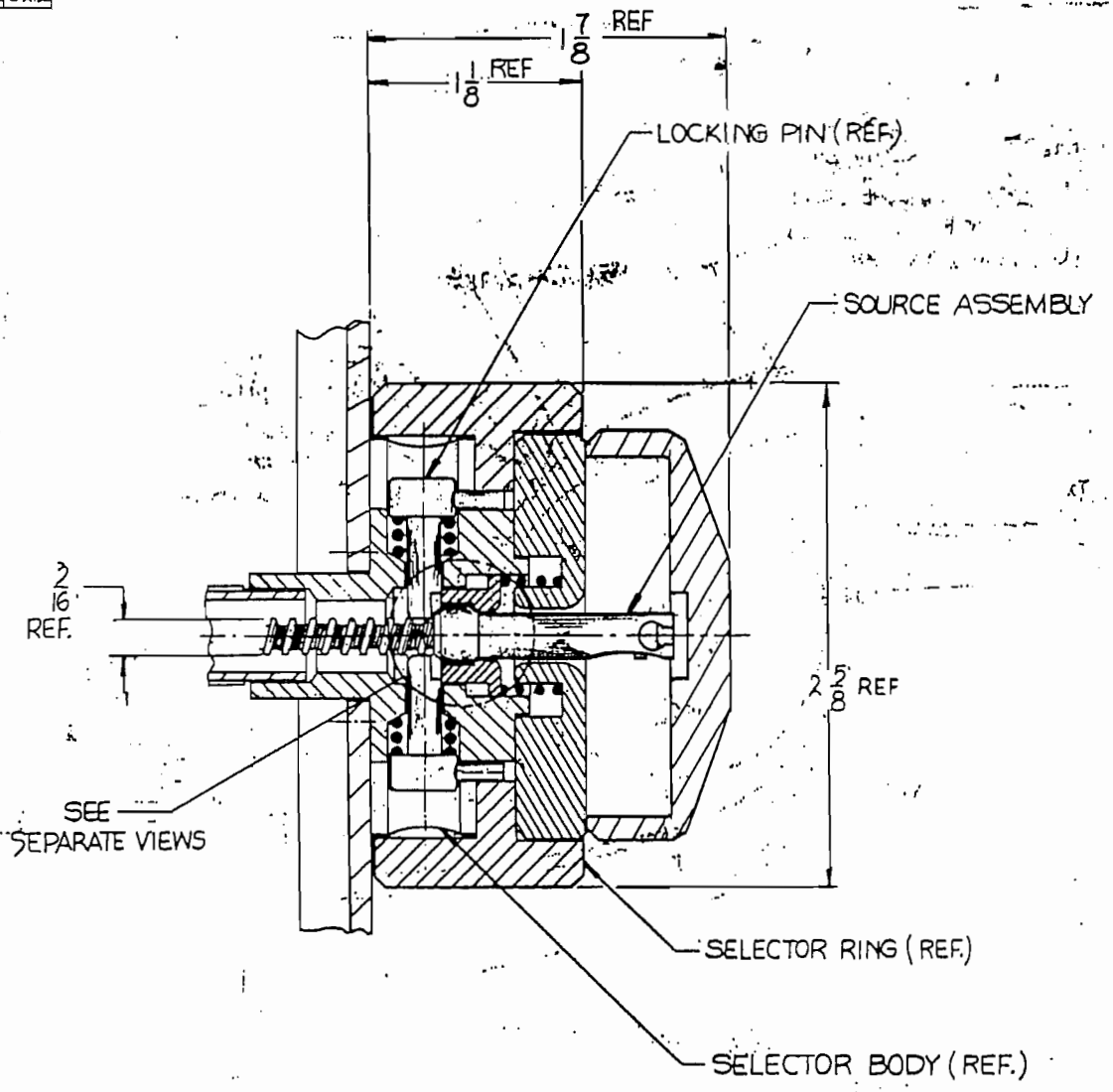

SECTION B-B

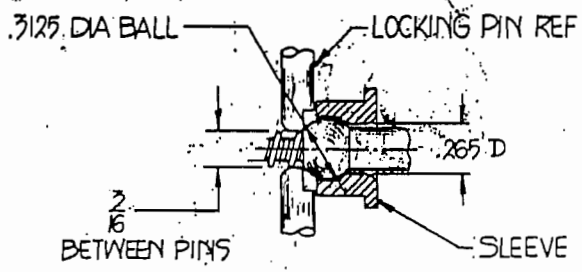

LOCKED POSITION

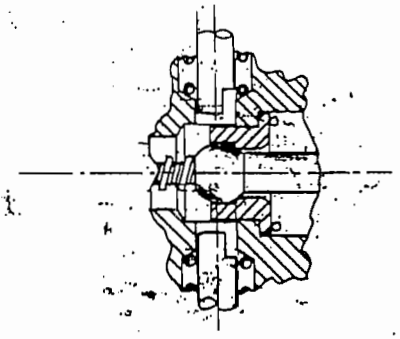

UNLOCKED POSITION

MATERIALS	TNO/BD	TECHNICAL OPERATIONS INC. RADIATION PRODUCTS DIVISION BURLINGTON, MA 01803
FINISH		DWG. TITLE: MODEL 660 GAMMA RAY PROJECTOR SHIPPING CONTAINER DESCRIPTIVE ASSEMBLY
DRAWN BY	J. Ingersoll	UNLESS OTHERWISE SPECIFIED TOLERANCES ARE .X ± .XX ± .XXX ± .XXXX ± ANGLES ± FRACTIONS ±
CHECKED BY		
APPROVED BY		CLASSIFICATION / SIZE C / DWG. NO. 66025 / REV. B
		SCALE 2:1 / SHEET 3 OF 4

REV.	DATE	DESCRIPTION
B	4-12-84	SEE SHT 1

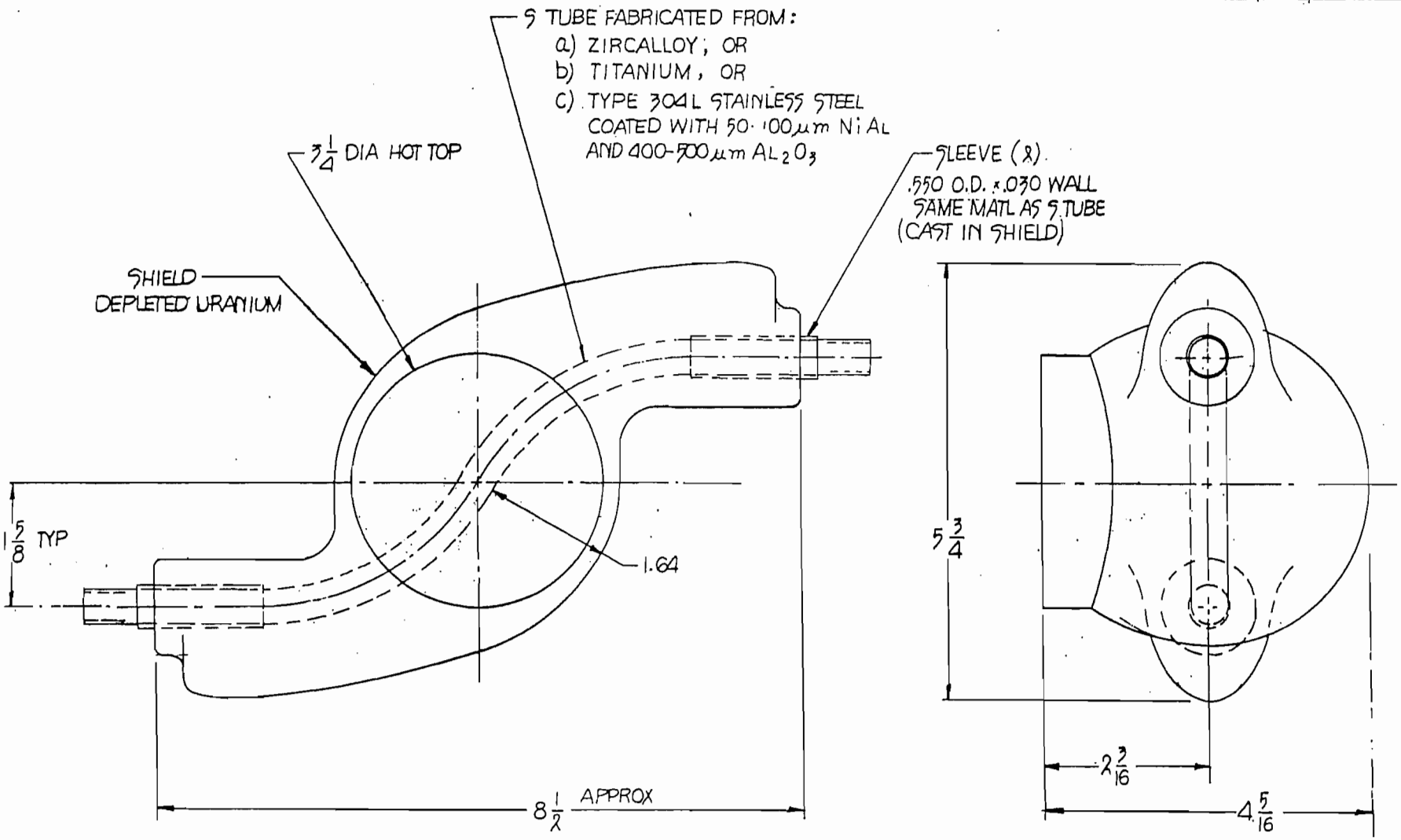

SHIELD DATA

35 LBS

MATERIALS: AS NOTED	Tech Ops — Tech-Ops, Inc. RADIATION PRODUCTS DIVISION BURLINGTON, MA 01803
FINISH: "	DWG TITLE: MODEL 660 GAMMA RAY PROJECT SHIPPING CONTAINER DESCRIPTIVE ASSEMBLY
DRAWN BY:	UNLESS OTHERWISE SPECIFIED TOLERANCES ARE: X ±, XX ±, XXX ±, ANGLES ±, FRACTIONS ±
CHECKED BY: 15 APR 84	
APPROVED BY: 15 APR 84	CLASSIFICATION / SIZE C / DWG. NO. 66025 / B
	SCALE 1:1 / SHEET 4 OF 4

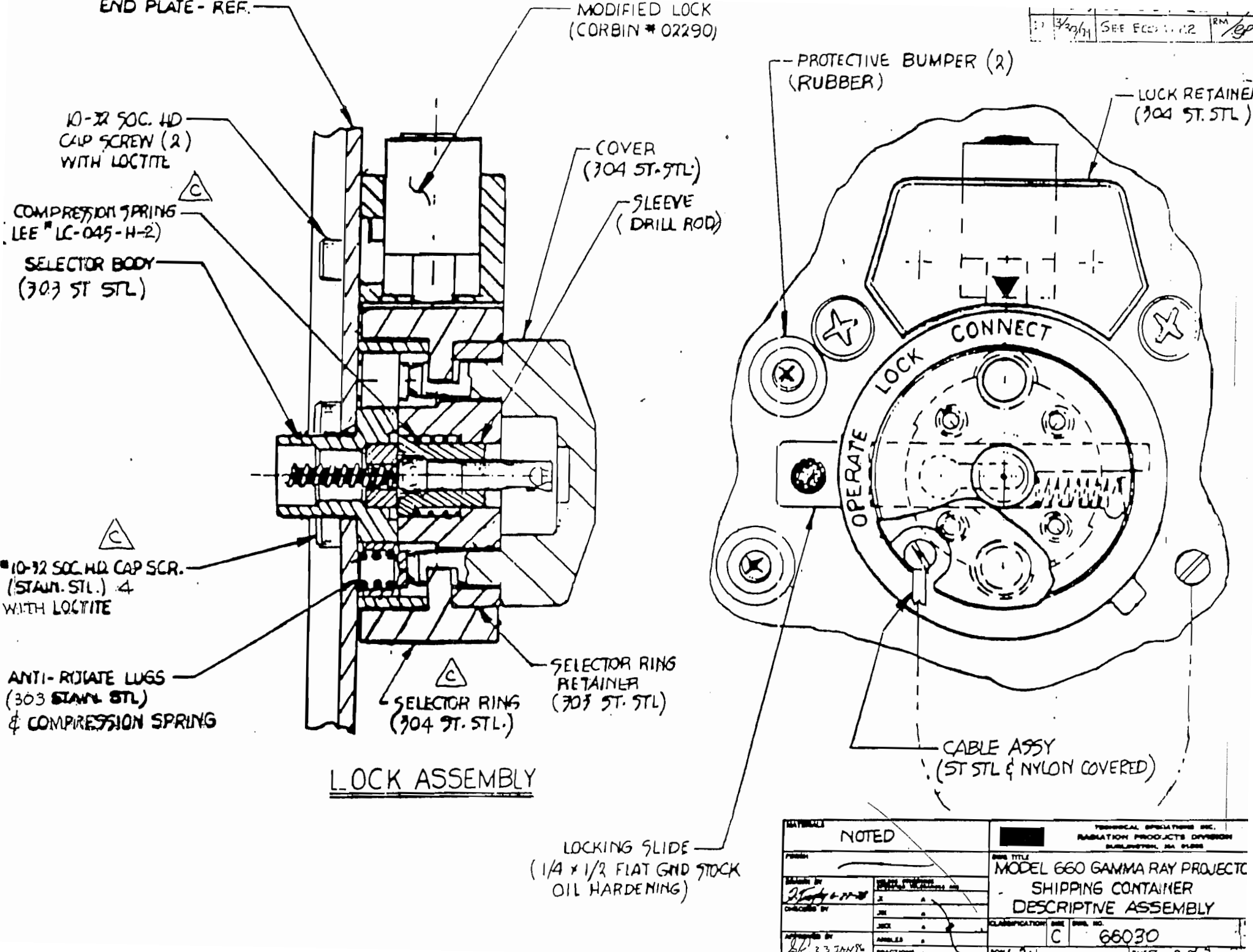
END PLATE - REF.
MODIFIED LOCK (CORBIN # 02290)
10-32 SOC. HD CAP SCREW (2) WITH LOCTITE
COMPRESSION SPRING LEE # LC-045-H-2)
SELECTOR BODY (303 ST STL)
COVER (304 ST. STL)
SLEEVE (DRILL ROD)
10-32 SOC. HD. CAP SCR. (STAIN. STL.) 4 WITH LOCTITE
ANTI-ROTATE LUGS (303 STAIN. STL) & COMPRESSION SPRING
SELECTOR RING (304 ST. STL.)
SELECTOR RING RETAINER (303 ST. STL)
LOCK ASSEMBLY
PROTECTIVE BUMPER (2) (RUBBER)
LUCK RETAINER (304 ST. STL)
CONNECT
LOCK
OPERATE
CABLE ASSY (ST STL & NYLON COVERED)
LOCKING SLIDE (1/4 x 1/2 FLAT GND STOCK OIL HARDENING)
NOTED
MODEL 660 GAMMA RAY PROJECTO
SHIPPING CONTAINER
DESCRIPTIVE ASSEMBLY
C
66030

C	11/13/73	SEE ECO 12-2	TA/GA
D	3/30/94	SEE ECO 12-2	RM/GP

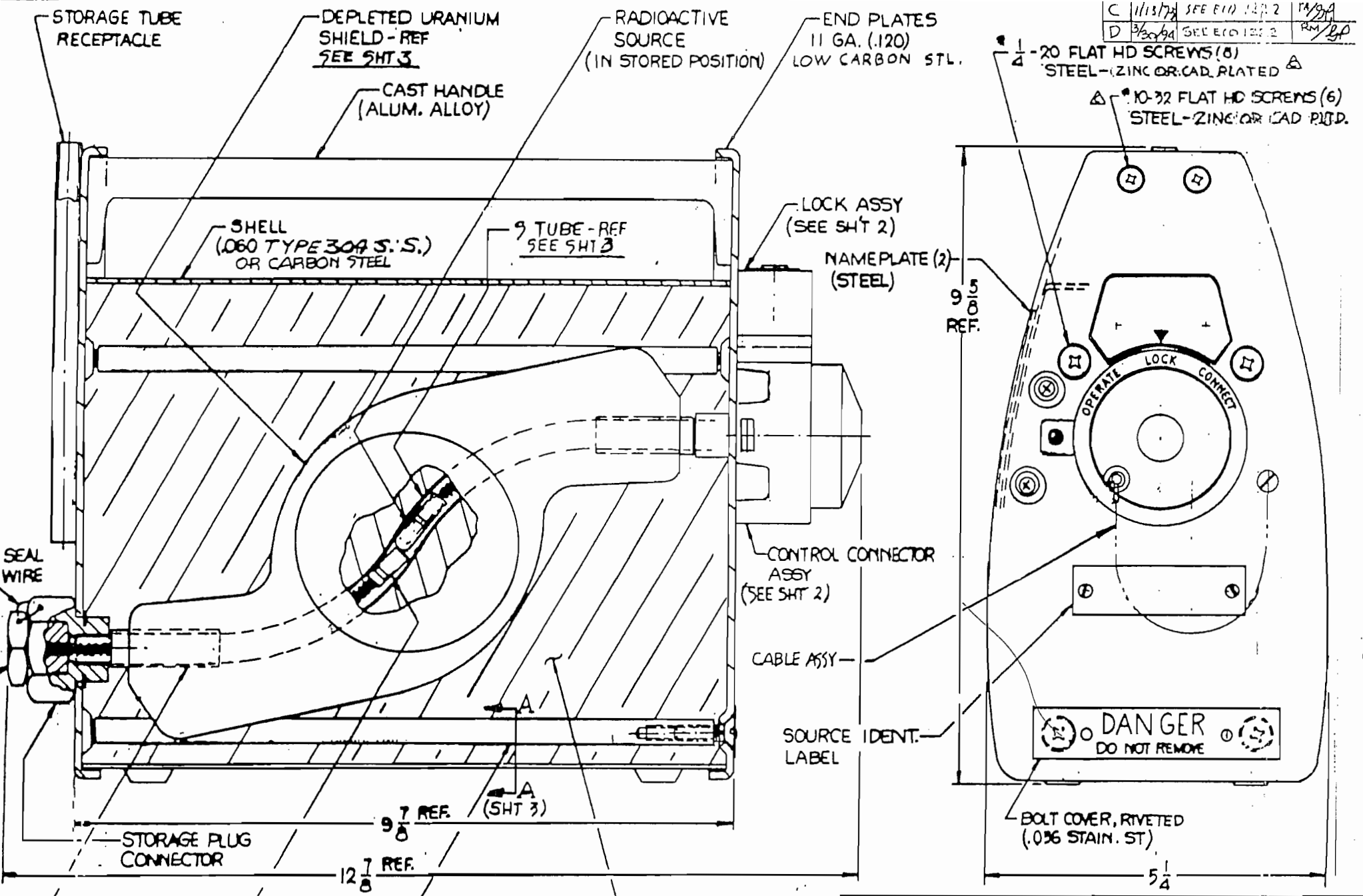

MOD NO	MAX CAPACITY
660A	120 Ci

TOTAL WEIGHT - 53 LBS ± 3 lbs. C

MATERIAL	NOTED
FINISH	
DRAWN BY	
CHECKED BY	
APPROVED BY	

TECHNICAL OPERATIONS INC. RADIATION PRODUCTS DIVISION BURLINGTON, MASS.

MODEL 660 GAMMA RAY PROJECTOR SHIPPING CONTAINER DESCRIPTIVE ASSEMBLY

CLASSIFICATION | REV. C | DWG. NO. 66030 | REV. D

D	3/30/94	SEE ECO 1222	

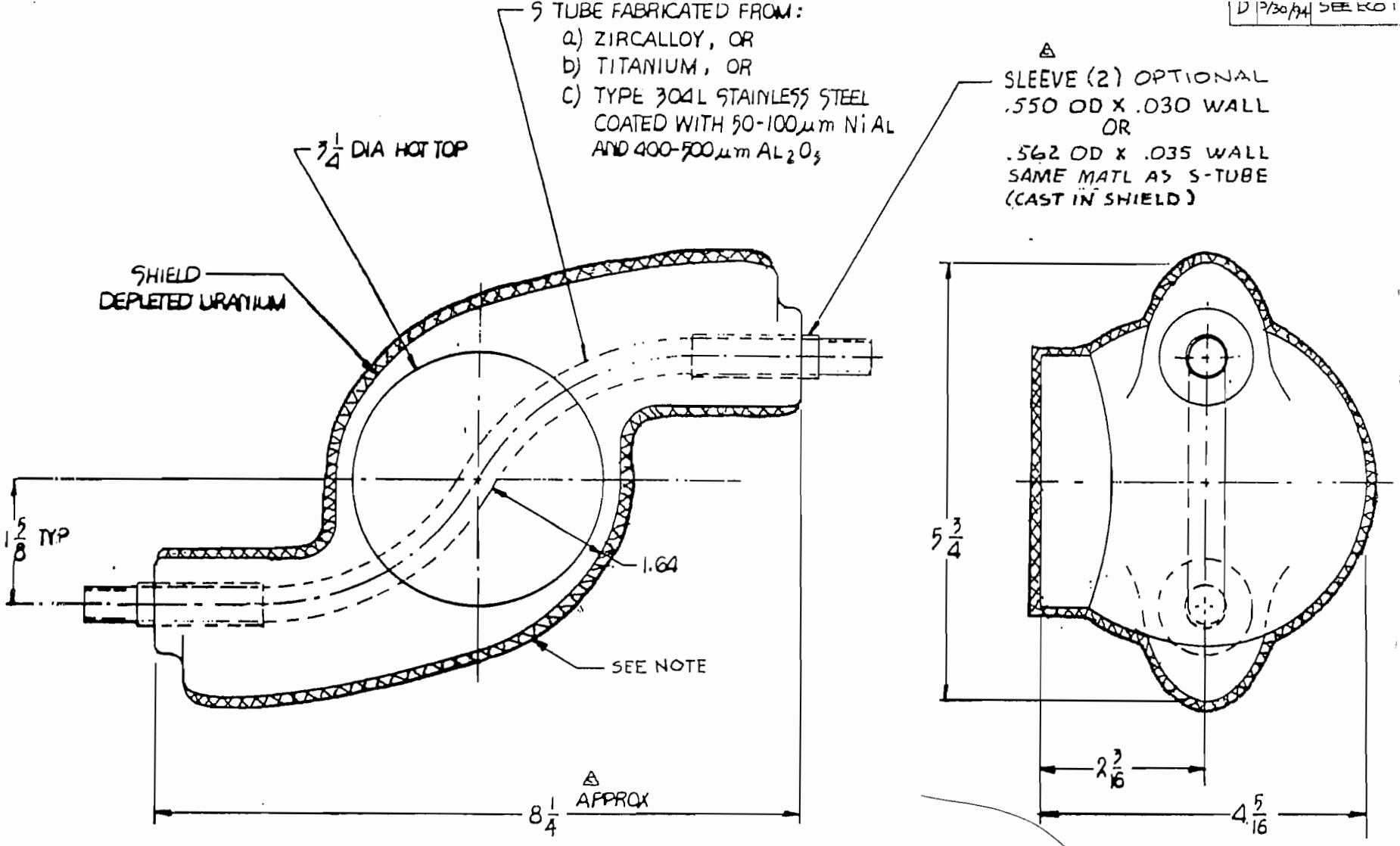

NOTE: ADDITIONAL LEAD SHIELDING NOT TO EXCEED 3 lbs. MAX. THICKNESS 1/4". TUNGSTEN NOT SHOWN. (F)

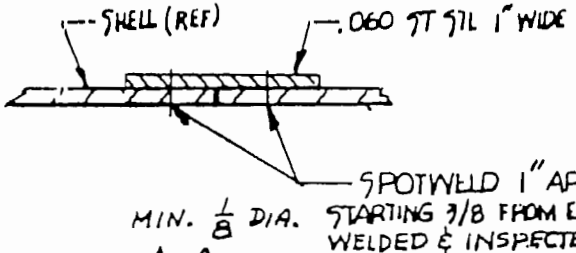

SECTION A-A

SCALE: 1/1

SHIELD DATA

37 LBS ± 3 lbs.

MATERIALS: AS NOTED	Tech-Ops, Inc. RADIATION PRODUCTS DIVISION BURLINGTON, MA 01803	
DRAWN BY	DWG TITLE: MODEL 660 GAMMA RAY PROJECTOR SHIPPING CONTAINER DESCRIPTIVE ASSEMBLY	
CHECKED BY	CLASSIFICATION:	SIZE: C / DWG. NO: 66030
APPROVED BY	SCALE: 1:1	SHEET 3 OF 3

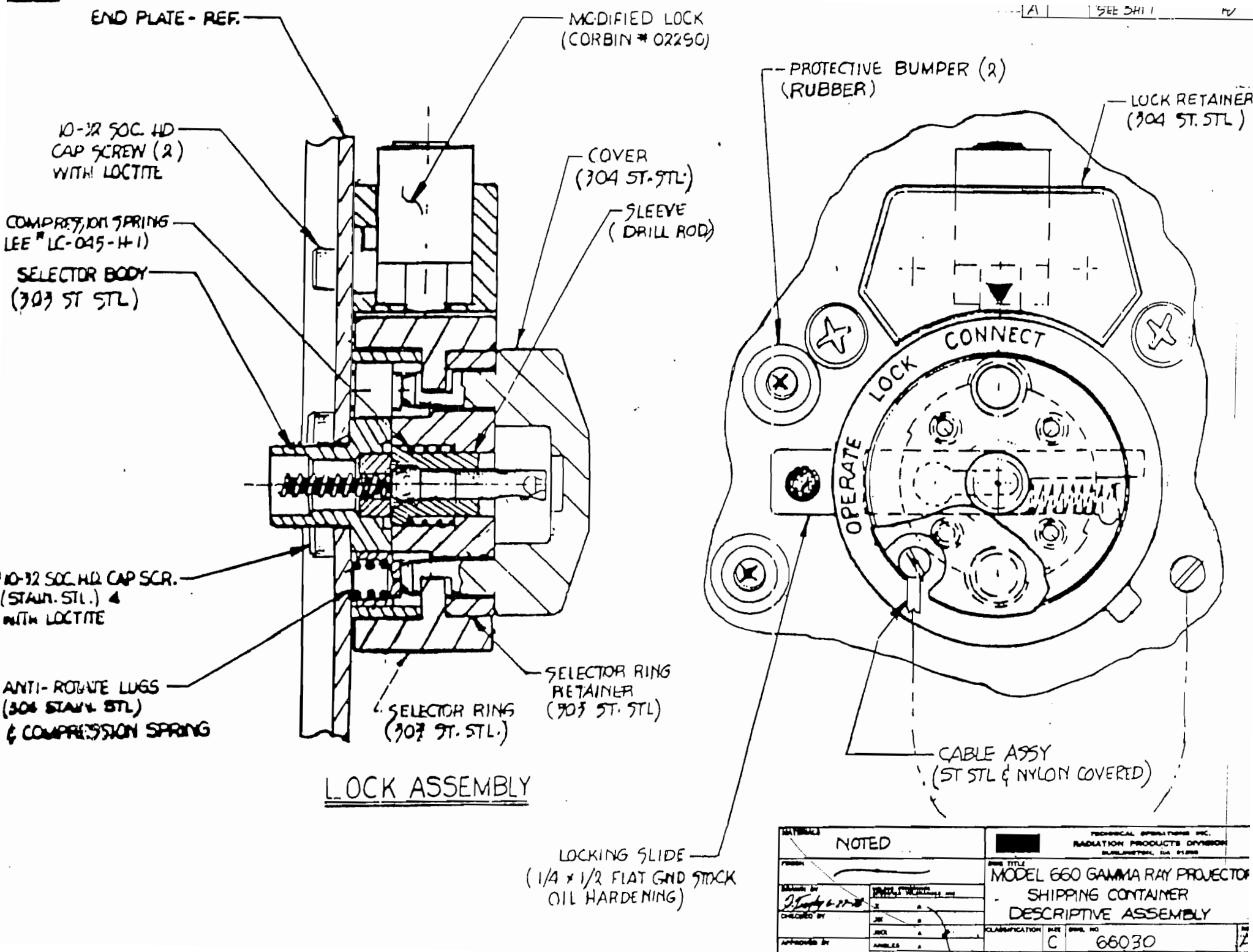
END PLATE - REF.
MODIFIED LOCK (CORBIN # 02290)
10-32 SOC. HD CAP SCREW (2) WITH LOCTITE
COVER (304 ST. STL)
SLEEVE (DRILL ROD)
COMPRESSION SPRING LEE # LC-045-H-1)
SELECTOR BODY (303 ST STL)
10-32 SOC. HD. CAP SCR. (STAIN. STL.) WITH LOCTITE
ANTI-ROTATE LUGS (304 STAIN. STL) & COMPRESSION SPRING
SELECTOR RING (303 ST. STL.)
SELECTOR RING RETAINER (303 ST. STL)
LOCK ASSEMBLY
PROTECTIVE BUMPER (2) (RUBBER)
LOCK RETAINER (304 ST. STL)
CONNECT
LOCK
OPERATE
CABLE ASSY (ST STL & NYLON COVERED)
LOCKING SLIDE (1/4 x 1/2 FLAT GND STOCK OIL HARDENING)
NOTED
RADIATION PRODUCTS DIVISION
MODEL 660 GAMMA RAY PROJECTOR
SHIPPING CONTAINER
DESCRIPTIVE ASSEMBLY
C
66030

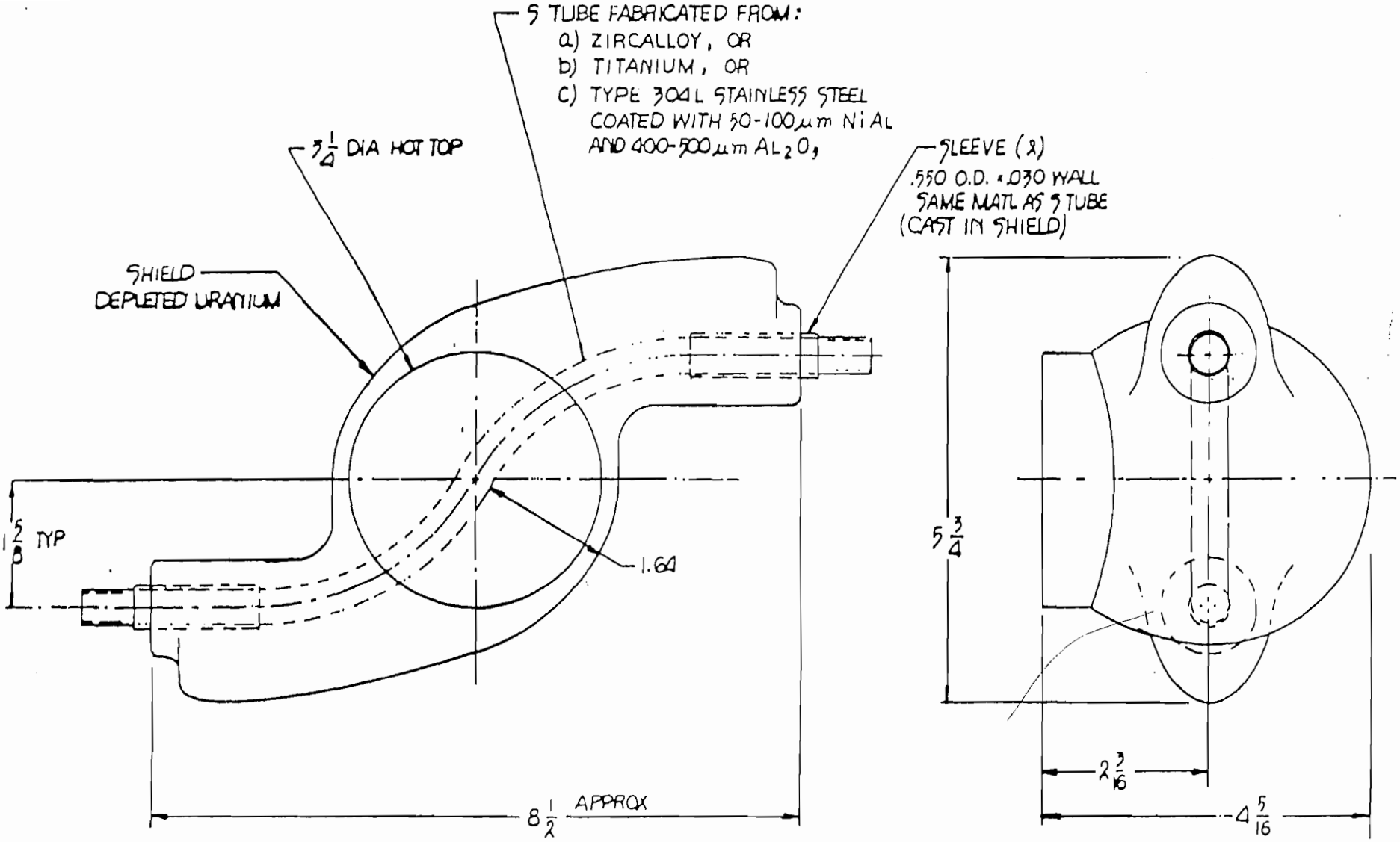

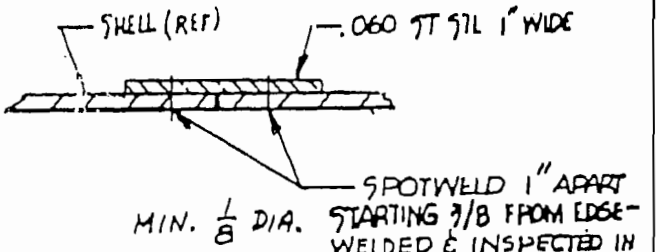

SECTION A-A

SCALE: 1/1

SHIELD DATA

38 LBS

SHT. 3 of

AS NOTED	RADIATION PRODUCTS DIVISION
	TITLE MODEL 660 GAMMA RAY PROJECT SHIPPING CONTAINER DESCRIPTIVE ASSEMBLY

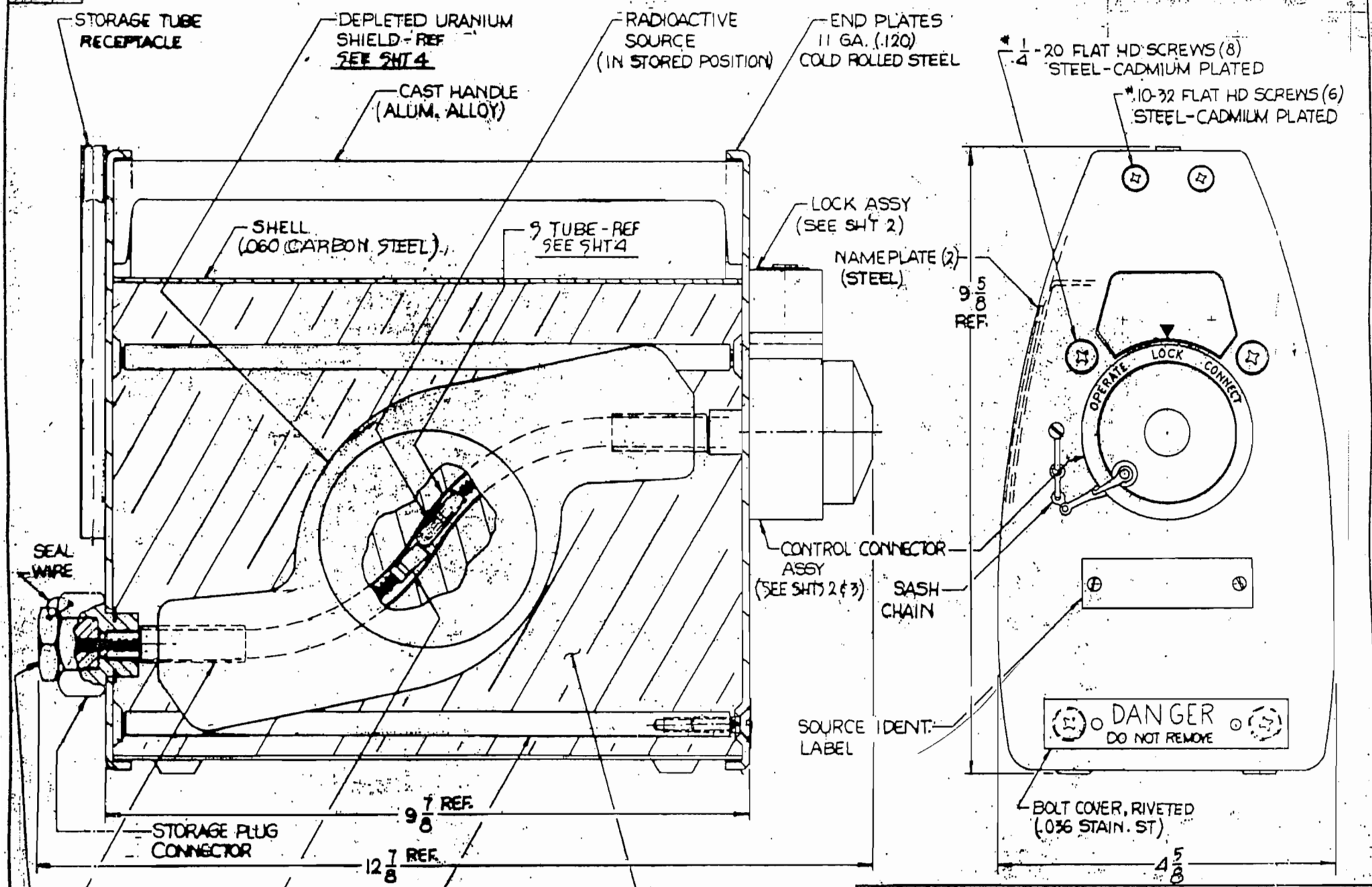
STORAGE TUBE RECEPTACLE
DEPLETED URANIUM SHIELD - REF SEE SHT 4
RADIOACTIVE SOURCE (IN STORED POSITION)
END PLATES 11 GA. (.120) COLD ROLLED STEEL
#1/4-20 FLAT HD SCREWS (8) STEEL-CADMIUM PLATED
#10-32 FLAT HD SCREWS (6) STEEL-CADMIUM PLATED
CAST HANDLE (ALUM. ALLOY)
SHELL (1060 CARBON STEEL)
9 TUBE - REF SEE SHT 4
LOCK ASSY (SEE SHT 2)
NAMEPLATE (2) (STEEL)
9 5/8 REF.
OPERATE
LOCK
CONNECT
SEAL WIRE
CONTROL CONNECTOR ASSY (SEE SHTS 2 & 3)
SASH CHAIN
SOURCE IDENT. LABEL
DANGER
DO NOT REMOVE
BOLT COVER, RIVETED (.036 STAIN. ST)
9 7/8 REF.
STORAGE PLUG CONNECTOR
12 7/8 REF.
4 5/8
CONNECTING RODS (4) 12L14 STEEL
RIGID POLYURETHANE FOAM
STORAGE PLUG ASSY
REINFORCEMENT SLEEVE - REF SEE SHT 4
MOD. NO. 660
MAX CAPACITY 120 CI
TOTAL WEIGHT - 48 LBS
NOTED
[redacted]
TECHNICAL OPERATIONS INC.
RADIATION PRODUCTS DIVISION
BURLINGTON, IOWA
MODEL 660 GAMMA RAY PROJECTOR SHIPPING CONTAINER DESCRIPTIVE ASSEMBLY
C
66030
SHEET 1 OF 4

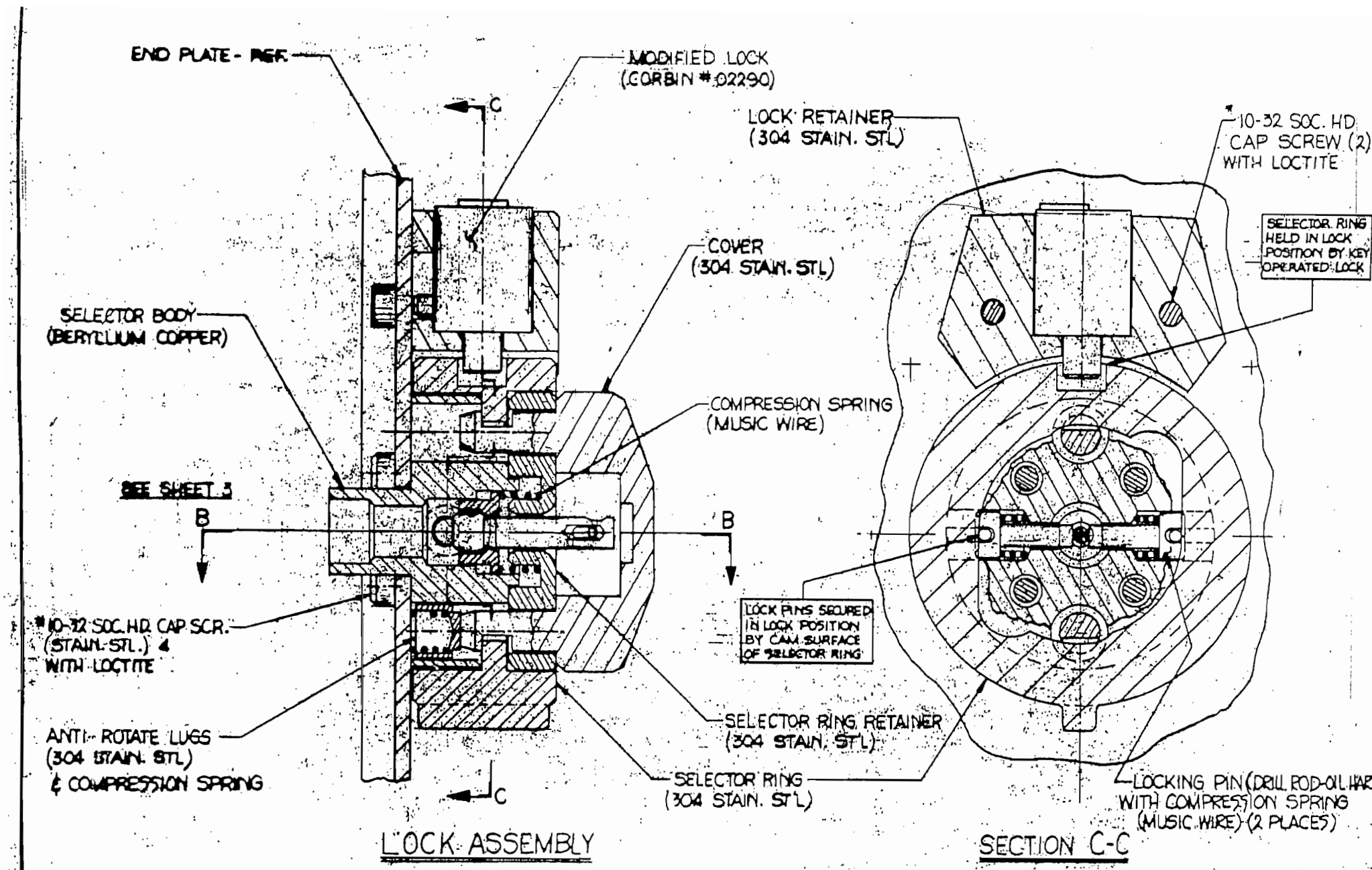

NOTED	[redacted]	TECHNICAL OPERATIONS, INC. RADIATION PRODUCTS DIVISION BURLINGTON, MA 01803
		MODEL 660 GAMMA RAY PROJECTOR SHIPPING CONTAINER DESCRIPTIVE ASSEMBLY
		CLASSIFICATION / SIZE C / DWG. NO. 66030
		SCALE 2:1 / SHEET 2 OF 4

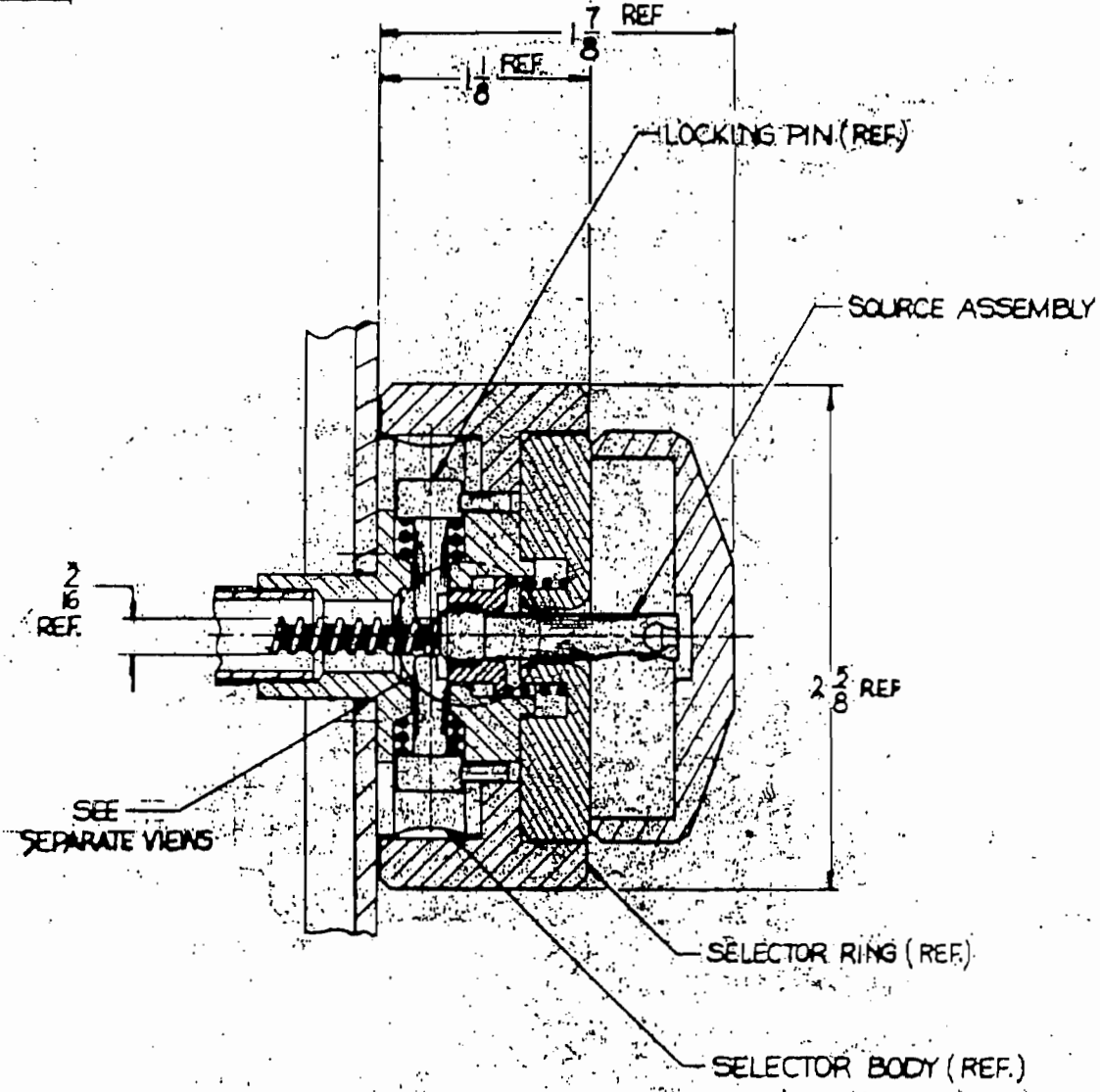

SECTION B-B

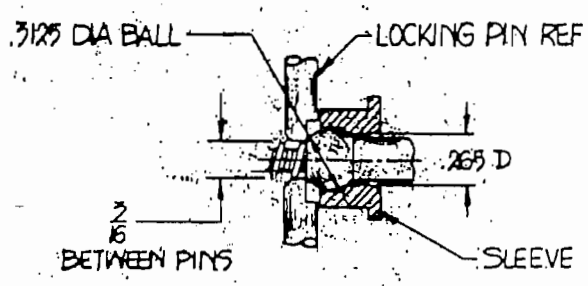

LOCKED POSITION

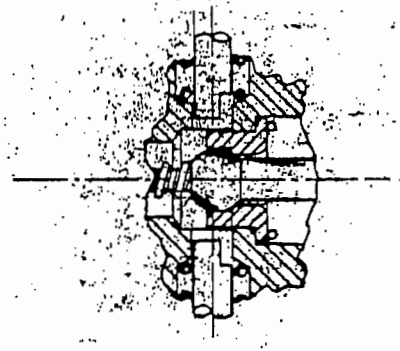

UNLOCKED POSITION

NOTED	TECHNICAL OPERATIONS INC. RADIATION PRODUCTS DIVISION BURLINGTON, MASS. 01803
	DWG TITLE: MODEL 660 GAMMA RAY PROJECTOR SHIPPING CONTAINER DESCRIPTIVE ASSEMBLY
	CLASSIFICATION: C · DWG. NO. 66030 · REV
	SCALE 2:1 · SHEET 3 OF 4

C66030

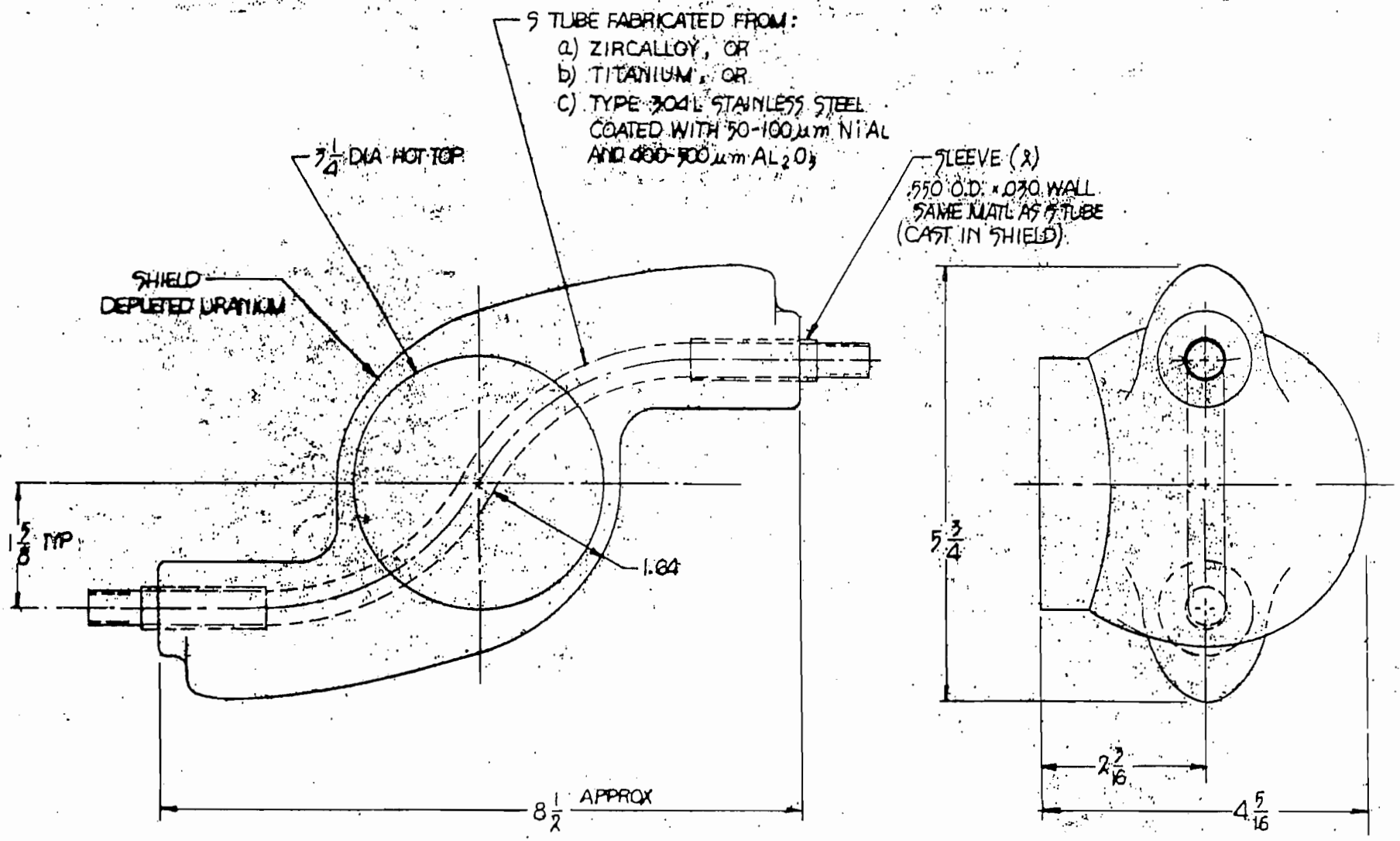

SHIELD DATA

35 LBS

AS NOTED	Tech Ops, Inc. RADIATION PRODUCTS DIVISION BURLINGTON, MA 01803
	MODEL 660 GAMMA RAY PROJECTOR SHIPPING CONTAINER DESCRIPTIVE ASSEMBLY
	CLASSIFICATION C · DWG. NO. 66030
	SCALE 1:1 · SHEET 4 OF 4

Appendix B: Selected Fasteners

The stainless steel screw selected for the end-plate fasteners is 51959-81 as specified in Military Standard 51959, a copy of which is included in this appendix. The item is highlighted on page 2 of the specification.

The toughness versus temperature curve below shows the consistent toughness of stainless steel over a wide range of temperatures. The curve is excerpted from Deutschman, Aaron D, Walter J. Michels, and Charles E. Wilson, *Machine Design: Theory and Practice* (New York: Macmillan Publishing Co., Inc. 1975), page 136.

Low temperature effects

As the temperature is lowered, there is an increase in yield strength, tensile strength, elastic modulus, and hardness and a decrease in ductility for metals such as aluminum and aluminum alloys, nickel alloys, austenitic steels, lead, and copper. Carbon and low alloy steels tend to become embrittled at much higher temperatures than the aforementioned metals. Embrittlement is measured by loss of toughness over a small temperature range (for example, see Section 3.21) when tested by the Charpy or Izod machines. The transition temperature is taken to be that for which the impact energy is reduced by 50% of its ductile value. Figure 3-43 shows some average value curves of toughness (energy in foot-pounds) versus temperature for a variety

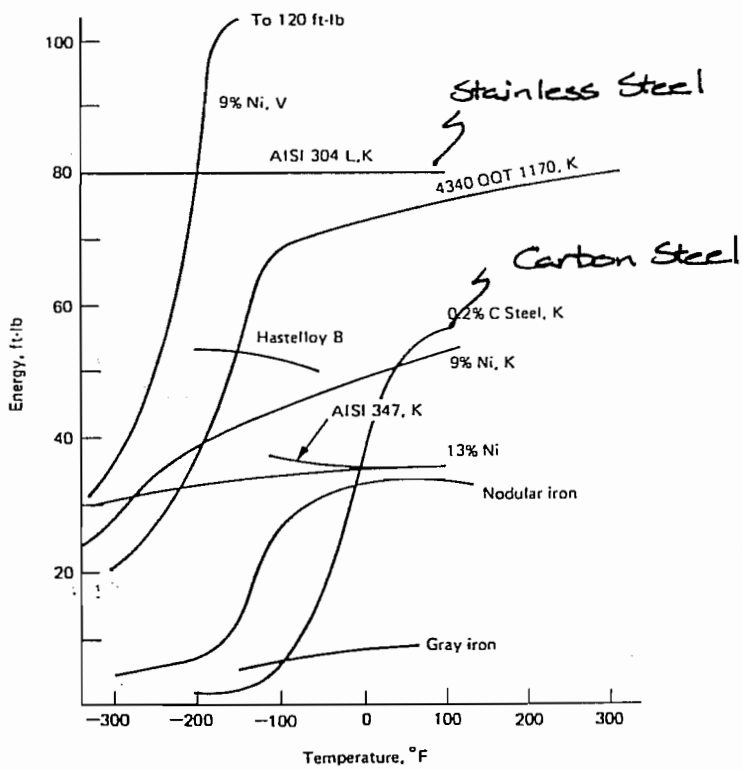

Figure 3-43 Toughness versus temperature for several metals. Note the sharp drop in toughness that takes place within a narrow temperature range. [From V. M. Faires: *Design of Machine Elements*, 4th ed. The Macmillan Company, New York, 1965.]

FED. SUP CLASS
5305

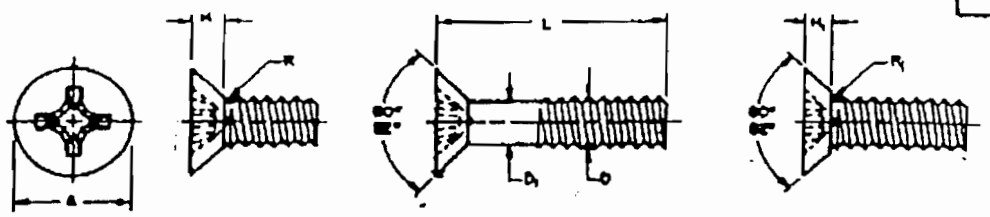

REVIEWER: AV, EL, GL, IS, MI, SSA
USER: AS, AT, MC, ME, MK, OS, YD

TABLE I

D	NOMINAL SIZE		#2 .0860	#4 .1120	#6 .1380	#8 .1640
	THREADS PER INCH		56UNC	40UNC	32UNC	32UNC
D_1	BODY DIAMETER	Max	.0860	.1120	.1380	.1640
		Min	.0717	.0925	.1141	.1399
A	HEAD DIAMETER	Max Sharp	.172	.225	.279	.332
		Min Sharp	.156	.207	.257	.308
		Abs Min	.147	.195	.244	.292
H	HEAD HEIGHT-FULL HEAD	Ref	.051	.067	.083	.100
H_1	HEAD HEIGHT-UNDERCUT HEAD	Max	.036	.047	.059	.070
		Min	.028	.038	.048	.058
R	RADIUS-FULL HEAD	Max	.034	.045	.055	.066
R_1	RADIUS-UNDERCUT HEAD	Max	.013	.017	.021	.025
	DRIVER SIZE		1	1	2	2
	MINIMUM TENSILE STRENGTH LOAD LBS.		300	480	730	1,120

L	LENGTH	Tolerance	Dash Number	Dash Number	Dash Number	Dash Number
Threads shall exend to within 2 threads of the bearing surface of the head, or closer if practicable.	1/8		1	11	24	39
	3/16		2	12	25	40
	1/4		3	13	26	41
	5/16		4	14	27	42
	3/8	+0 -1/32	5	15	28	43
	7/16		6	16	29	44
	1/2		7	17	30	45
	5/8		8	18	31	46
	3/4		9	19	32	47
	7/8		10*	20	33	48
	1			21	34	49
	1-1/4			22*	35	50
	1-1/2	+0 -1/16		23*	36	51
	1-3/4				37	52
	2				38	53
Minimum complete thread length of 1-3/4	2-1/4					54*
	2-1/2	+0 -3/32				55*
	2-3/4					56*
	3					57*

* Indicates manufacturer's non-stock production items.
** Based on 80,000 PSI minimum tensile strength. Load pounds are calculated by the stress areas indicated in Screw-Thread Standards for Federal Services, Handbook H-28.

1. MATERIAL: Steel, Corrosion-Resisting in accordance with Fed. Std. No. 66, AISI 302, 303, 304 and 305, or equal to or interchangeable with the 18-8 chrome-nickel alloy steel.
2. PROTECTIVE COATING: Passivated in accordance with QQ-P-35.
   (B) Black oxide coated in accordance with MIL-C-13924, class 4. (When black oxide coating is required the dash number shall be followed by a "B".)
3. MAGNETIC PERMEABILITY: These fasteners have a magnetic permeability of 2.0 maximum (air = 1.0) for a field strength of H = 200 oersteds using a magnetic indicator per MIL-I-17214.
4. THREADS: The threads shall be in accordance with Screw-Thread Standards for Federal Services, Handbook H28.
5. RECESS: The recess shall conform with MS9006.
6. DIMENSIONS: All dimensions are in inches, unless otherwise specified.
7. PART NUMBER: The MS part number consists of the MS number, plus the dash number.
   (B) Example: MS51959-1; Passivated.
   MS51959-1B; Black oxide coated.
8. Referenced documents shall be of the issue in effect on date of invitations for bid.
9. For design feature purposes, this standard takes precedence over procurement documents referenced herein.
10. Sizes above dotted line have undercut head.

(B) For changes see sheet 1.

APPROVED: 9 DECEMBER 1963 REVISED (A) 15 OCTOBER 1965 (B) 15 DEC 1968

P.A. WC Other Cust SH A2	TITLE SCREW, MACHINE-FLAT COUNTERSUNK HEAD, 82°, CROSS-RECESSED, CORROSION RESISTING STEEL, UNC-2A	MILITARY STANDARD MS 51959
PROCUREMENT SPECIFICATION FF-S-92	SUPERSEDING MS35200 and in part: MS35249, MS35358, MS35363 and AN505	SHEET 1 OF 4

DD FORM 672-1

FED. SUP CLASS
5305

REVIEWER: AV, EL, CL, IS, MI, NSA, AS, AT, MC, ME, MC, OS, YD
USER:

TABLE I (CONTINUED)

D	NOMINAL SIZE		#10 .1900	1/4 .2500	5/16 .3125	3/8 .3750
	THREADS PER INCH		24UNC	20UNC	18UNC	16UNC
D_1	BODY DIAMETER	Max	.1900	.2500	.3125	.3750
		Min	.1566	.2127	.2712	.3287
A	HEAD DIAMETER	Max Sharp	.385	.507	.635	.762
		Min Sharp	.359	.477	.600	.722
		Abs Min	.340	.452	.568	.685
H	HEAD HEIGHT-FULL HEAD	Ref	.116	.153	.191	.230
H_1	HEAD HEIGHT-UNDERCUT HEAD	Max	.081	.107	.134	.161
		Min	.068	.092	.116	.140
R	RADIUS-FULL HEAD	Max	.074	.100	.125	.150
R_1	RADIUS-UNDERCUT HEAD	Max	.029	.038	.047	.056
	DRIVER SIZE		2	3	4	4
**	MINIMUM TENSILE STRENGTH LOAD LBS.		1,400	2,540	4,190	6,200

L	LENGTH	Tolerance	#10 .1900 Dash Number	1/4 .2500 Dash Number	5/16 .3125 Dash Number	3/8 .3750 Dash Number
Threads shall extend to within 2 threads of the bearing surface of the head, or closer if practicable.	1/8					
	3/16		58*			
	1/4		59			
	5/16		60	76		
	3/8	+0 -1/32	61	77	92	
	7/16		62	78	93	
	1/2		63	79	94	107
	5/8		64	80	95	108
	3/4		65	81	96	109
	7/8		66	82	97	110
	1		67	83	98	111
	1-1/4		68	84	99	112
	1-1/2	+0 -1/16	69	85	100	113
	1-3/4		70	86	101	114
	2		71	87	102	115
Minimum complete thread length of 1-3/4	2-1/4	+0 -3/32	72	88	103	116
	2-1/2		73	89	104	117
	2-3/4		74*	90*	105*	118
	3		75*	91*	106*	119

* Indicates manufacturer's non-stock production items.
** Based on 80,000 PSI minimum tensile strength. Load pounds are calculated by the stress areas indicated in Screw-Thread Standards for Federal Services, Handbook H-28.
NOTE: For illustration, material, treatment, and other pertinent data, see sheet 3.

APPROVED 19 DECEMBER 1963 REVISED (A) 15 OCT 1965 (B) FOR CHANGES SEE SHEET 1

P.A. WC Other Cust SH 82	TITLE SCREW, MACHINE-FLAT COUNTERSUNK HEAD, 82°, CROSS-RECESSED, CORROSION RESISTING STEEL, UNC-2A	MILITARY STANDARD MS 51959
PROCUREMENT SPECIFICATION FF-S-92	SUPERSEDES: MS35200 and in part: MS35249, MS35358, MS35363 and AN505	SHEET 2 OF

DD FORM 1 SEP 61 672-1 (Continued)

PREVIOUS EDITION OF THIS FORM ARE OBSOLETE.

PRO. SUP CLASS
5305

TABLE II
INTERCHANGEABILITY TABLE

The screws covered by dash numbers given MS35200 and in part MS35249 and AN505 are cancelled/inactivated after the dates indicated on the documents. Use the dash numbers given in the preceding sheets for nominal sizes thru 3/8 inch, and MS24671 for larger sizes. The cancelled screws cannot always replace the new screws and should be used until existing stocks are depleted. Use only the new screws for design and replacement. Replacement shall be in accordance with this table and MS24671.

CROSS REFERENCE OF PART NUMBERS

CANCELLED				NEW	CANCELLED				NEW
MS35249	MS35200	AN505		MS51959	MS35249	MS35200	AN505		MS51959
Dash Number				Dash Number	Dash Number				Dash Number
1				No Replacement			C5R14	C5-14	No Replacement
2				No Replacement			C5R15	C5-15	No Replacement
3				No Replacement			C5R16	C5-16	No Replacement
4				No Replacement			C5R18	C5-18	No Replacement
5				No Replacement			C5R20	C5-20	No Replacement
6				No Replacement			C5R22	C5-22	No Replacement
7				No Replacement			C5R24	C5-24	No Replacement
8	1			1	31	21			24
9	2	C2R3	C2-3	2	32	22	C6R3	C6-3	25
10	3	C2R4	C2-4	3	33	23	C6R4	C6-4	26
11	4	C2R5	C2-5	4	34	24	C6R5	C6-5	27
12	5	C2R6	C2-6	5	35	25	C6R6	C6-6	28
13	6	C2R7	C2-7	6	36	26	C6R7	C6-7	29
14	7	C2R8	C2-8	7	37	27	C6R8	C6-8	30
		C2R9	C2-9	No Replacement			C6R9	C6-9	No Replacement
15	8	C2R10	C2-10	8	38	28	C6R10	C6-10	31
		C2R11	C2-11	No Replacement			C6R11	C6-11	No Replacement
16	9	C2R12	C2-12	9	39	29	C6R12	C6-12	32
17				10			C6R13	C6-13	No Replacement
		C3R3	C3-3	No Replacement	40	30	C6R14	C6-14	33
		C3R4	C3-4	No Replacement			C6R15	C6-15	No Replacement
		C3R5	C3-5	No Replacement	41	31	C6R16	C6-16	34
		C3R6	C3-6	No Replacement			C6R18	C6-18	No Replacement
		C3R7	C3-7	No Replacement	42	32	C6R20	C6-20	35
		C3R8	C3-8	No Replacement			C6R22	C6-22	No Replacement
		C3R9	C3-9	No Replacement	43	33	C6R24	C6-24	36
		C3R10	C3-10	No Replacement			C6R26	C6-26	No Replacement
		C3R11	C3-11	No Replacement	44	34	C6R28	C6-28	37
		C3R12	C3-12	No Replacement			C6R30	C6-30	No Replacement
		C3R13	C3-13	No Replacement	45	35	C6R32	C6-32	38
		C3R14	C3-14	No Replacement			C6R34	C6-34	No Replacement
		C3R15	C3-15	No Replacement			C6R36	C6-36	No Replacement
		C3R16	C3-16	No Replacement			C6R38	C6-38	No Replacement
18	10			11			C6R40	C6-40	No Replacement
19	11	C4R3	C4-3	12			C6R42	C6-42	No Replacement
20	12	C4R4	C4-4	13			C6R44	C6-44	No Replacement
21	13	C4R5	C4-5	14			C6R46	C6-46	No Replacement
22	14	C4R6	C4-6	15			C6R48	C6-48	No Replacement
23	15	C4R7	C4-7	16	46	36			39
24	16	C4R8	C4-8	17	47	37			40
		C4R9	C4-9	No Replacement	48	38	C8R4	C8-4	41
25	17	C4R10	C4-10	18	49	39	C8R5	C8-5	42
		C4R11	C4-11	No Replacement	50	40	C8R6	C8-6	43
26	18	C4R12	C4-12	19	51	41	C8R7	C8-7	44
		C4R13	C4-13	No Replacement	52	42	C8R8	C8-8	45
27	19	C4R14	C4-14	20			C8R9	C8-9	No Replacement
		C4R15	C4-15	No Replacement	53	43	C8R10	C8-10	46
28	20	C4R16	C4-16	21			C8R11	C8-11	No Replacement
		C4R18	C4-18	No Replacement	54	44	C8R12	C8-12	47
29		C4R20	C4-20	22			C8R13	C8-13	No Replacement
		C4R22	C4-22	No Replacement	55	45	C8R14	C8-14	48
30		C4R24	C4-24	23			C8R15	C8-15	No Replacement
		C5R3	C5-3	No Replacement	56	46	C8R16	C8-16	49
		C5R4	C5-4	No Replacement			C8R18	C8-18	No Replacement
		C5R5	C5-5	No Replacement	57	47	C8R20	C8-20	50
		C5R6	C5-6	No Replacement			C8R22	C8-22	No Replacement
		C5R7	C5-7	No Replacement	58	48	C8R24	C8-24	51
		C5R8	C5-8	No Replacement			C8R26	C8-26	No Replacement
		C5R9	C5-9	No Replacement	59	49	C8R28	C8-28	52
		C5R10	C5-10	No Replacement			C8R30	C8-30	No Replacement
		C5R11	C5-11	No Replacement	60	50	C8R32	C8-32	53
		C5R12	C5-12	No Replacement			C8R34	C8-34	No Replacement
		C5R13	C5-13	No Replacement	61		C8R36	C8-36	54

(Continued on Sheet 4)

REVIEWER: AV, EL, GL, IS, MI, SSH
USER: AS, AT, KC, KE, MC, OS, YD

APPROVED 19 DECEMBER 1963 REVISED (A) 15 OCT 1965 (B) FOR CHANGES SEE SHEET 1

P.A. WC Other Cust SH 82	TITLE SCREW, MACHINE-FLAT COUNTERSUNK HEAD, 82°, CROSS-RECESSED, CORROSION RESISTING STEEL, UNC-2A	MILITARY STANDARD MS 51959
PROCUREMENT SPECIFICATION FF-S-92	SUPERSEDES: MS35200 and in part: MS35249, MS35358, MS35363 and AN505	SHEET 3 OF

THIS MILITARY STANDARD HAS BEEN APPROVED BY THE DEPARTMENT OF DEFENSE AND IS MANDATORY FOR USE BY ALL DEPARTMENTS AND AGENCIES OF THE DEPARTMENT OF DEFENSE. SELECTION FOR ALL NON ENGINEERING AND DESIGN APPLICATIONS AND FOR DESCRIPTIVE USE SHALL BE MADE FROM THIS DOCUMENT.

PREVIOUS EDITIONS OF THIS FORM ARE OBSOLETE.

FED. SUP CLASS
5305

TABLE II (CONTINUED)

INTERCHANGEABILITY TABLE (CONTINUED)

CROSS REFERENCE OF PART NUMBERS

CANCELLED				NEW	CANCELLED				NEW
MS35249	MS35200	AN505		MS51959	MS35249	MS35200	AN505		MS51959
Dash Number				Dash Number	Dash Number				Dash Number
		C8R38	C8-38	No Replacement	96	79	C416R40	C416-40	89
62		C8R40	C8-40	55			C416R42	C416-42	No Replacement
		C8R42	C8-42	No Replacement	97		C416R44	C416-44	90
63		C8R44	C8-44	56			C416R46	C416-46	No Replacement
		C8R46	C8-46	No Replacement	98		C416R48	C416-48	91
64		C8R48	C8-48	57	99	80			92
65				58	100	81			93
66	51			59	101	82	C516R8	C516-8	94
67	52	C10R5	C10-5	60			C516R9	C516-9	No Replacement
68	53	C10R6	C10-6	61	102	83	C516R10	C516-10	95
69	54	C10R7	C10-7	62			C516R11	C516-11	No Replacement
70	55	C10R8	C10-8	63	103	84	C516R12	C516-12	96
		C10R9	C10-9	No Replacement			C516R13	C516-13	No Replacement
71	56	C10R10	C10-10	64	104	85	C516R14	C516-14	97
		C10R11	C10-11	No Replacement			C516R15	C516-15	No Replacement
72	57	C10R12	C10-12	65	105	86	C516R16	C516-16	98
		C10R13	C10-13	No Replacement			C516R18	C516-18	No Replacement
73	58	C10R14	C10-14	66	106	87	C516R20	C516-20	99
		C10R15	C10-15	No Replacement			C516R22	C516-22	No Replacement
74	59	C10R16	C10-16	67	107	88	C516R24	C516-24	100
		C10R18	C10-18	No Replacement			C516R26	C516-26	No Replacement
75	60	C10R20	C10-20	68	108	89	C516R28	C516-28	101
		C10R22	C10-22	No Replacement			C516R30	C516-30	No Replacement
76	61	C10R24	C10-24	69	109	90	C516R32	C516-32	102
		C10R26	C10-26	No Replacement			C516R34	C516-34	No Replacement
77	62	C10R28	C10-28	70	110	91	C516R36	C516-36	103
		C10R30	C10-30	No Replacement			C516R38	C516-38	No Replacement
78	63	C10R32	C10-32	71	111	92	C516R40	C516-40	104
		C10R34	C10-34	No Replacement			C516R42	C516-42	No Replacement
79	64	C10R36	C10-36	72	112		C516R44	C516-44	105
		C10R38	C10-38	No Replacement			C516R46	C516-46	No Replacement
80	65	C10R40	C10-40	73	113		C516R48	C516-48	106
		C10R42	C10-42	No Replacement	114	93	C616R8	C616-8	107
81		C10R44	C10-44	74			C616R9	C616-9	No Replacement
		C10R46	C10-46	No Replacement	115	94	C616R10	C616-10	108
82		C10R48	C10-48	75			C616R11	C616-11	No Replacement
83	66	C416R5	C416-5	76	116	95	C616R12	C616-12	109
84	67	C416R6	C416-6	77			C616R13	C616-13	No Replacement
85	68	C416R7	C416-7	78	117	96	C616R14	C616-14	110
86	69	C416R8	C416-8	79			C616R15	C616-15	No Replacement
		C416R9	C416-9	No Replacement	118	97	C616R16	C616-16	111
87	70	C416R10	C416-10	80			C616R18	C616-18	No Replacement
		C416R11	C416-11	No Replacement	119	98	C616R20	C616-20	112
88	71	C416R12	C416-12	81			C616R22	C616-22	No Replacement
		C416R13	C416-13	No Replacement	120	99	C616R24	C616-24	113
89	72	C416R14	C416-14	82			C616R26	C616-26	No Replacement
		C416R15	C416-15	No Replacement	121	100	C616R28	C616-28	114
90	73	C416R16	C416-16	83			C616R30	C616-30	No Replacement
		C416R18	C416-18	No Replacement	122	101	C616R32	C616-32	115
91	74	C416R20	C416-20	84			C616R34	C616-34	No Replacement
		C416R22	C416-22	No Replacement	123	102	C616R36	C616-36	116
92	75	C416R24	C416-24	85			C616R38	C616-38	No Replacement
		C416R26	C416-26	No Replacement	124	103	C616R40	C616-40	117
93	76	C416R28	C416-28	86			C616R42	C616-42	No Replacement
		C416R30	C416-30	No Replacement	125	104	C616R44	C616-44	118
94	77	C416R32	C416-32	87			C616R46	C616-46	No Replacement
		C416R34		No Replacement	126	105	C616R48	C616-48	119
95	78	C416R36		88	127 thru				
		C416R38		No Replacement	178				*Use MS24671

* Diameters over 3/8" covered by MS24671.

REVISIONS: AV, EL, CL, AS, HL, SSA
CSSA: AS, AT, KC, MC, KL, CS, LB

APPROVED 19 DECEMBER 1963 REVISED (A) 15 OCT 1965 (B) FOR CHANGES SEE SHEET 1

This military standard has been approved by the Department of Defense and is mandatory for use by all departments and agencies of the Department of Defense. Selection for all engineering and design applications and for procurement use should be made from this document.

P.A. WC Other Cust SH 82	TITLE SCREW, MACHINE-FLAT COUNTERSUNK HEAD, 82°, CROSS-RECESSED, CORROSION RESISTING STEEL, UNC-2A	MILITARY STANDARD MS 51959
PROCUREMENT SPECIFICATION FF-S-92	SUPERSEDES: MS35200 and in part: MS35249, MS35355, MS35363 and AN505	SHEET 4 OF

DD FORM 1 NOV 61 672-1 (Coordinated)

PREVIOUS EDITION OF THIS FORM ARE OBSOLETE

☆ U. S. GOVERNMENT PRINTING OFFICE: 1969 341-514/A-3540

Appendix C: Referenced Materials

The following is an excerpt from Avallone, Eugene A., and Theodore Baumeister III, Editors, *Marks' Standard Handbook for Mechanical Engineers*, Ninth Edition (New York: McGraw-Hill Book Company, 1987), page 4-27.

Table 4.1.5 Approximate Inversion-Curve Locus for Air

P, bar	0	25	50	75	100	125	150	175	200	225
T_L, K	(112)*	114	117	120	124	128	132	137	143	149
T_U, K	653	641	629	617	606	594	582	568	555	541
P, bar	250	275	300	325	350	375	400	425	432	
T_L, K	156	164	173	184	197	212	230	265	300	
T_U, K	526	509	491	470	445	417	386	345	300	

*Hypothetical low-pressure limit.

Loss Due to Throttling A throttling process in a cycle of operations always introduces a loss of efficiency. If T_0 is the temperature corresponding to the back pressure, the loss of available energy is the product of T_0 and the increase of entropy during the throttling process. The following example illustrates the calculation in the case of ammonia passing through the expansion valve of a refrigerating machine.

EXAMPLE. The liquid ammonia at a temperature of 70°F passes through the valve into the brine coil in which the temperature is 20 deg and the pressure is 48.21 psia. The initial enthalpy of the liquid ammonia is $h_{f1} = 120.5$, and therefore the final enthalpy is $h_{f2} + x_2 h_{fg2} = 64.7 + 553.1x_2 = 120.5$, whence $x_2 = 0.101$. The initial entropy is $s_{f1} = 0.254$. The final entropy is $s_{f2} + (x_2 h_{fg2}/T_2) = 0.144 + 0.101 \times 1.153 = 0.260$. $T_0 = 20 + 460 = 480$; hence the loss of refrigerating effect is $480 \times (0.260 - 0.254) = 2.9$ Btu.

COMBUSTION

REFERENCES: Chigier, "Energy, Combustion and Environment," McGraw-Hill, 1981. Campbell, "Thermodynamic Analysis of Combustion Engines," Wiley, 1979. Glassman, "Combustion," Academic Press, New York, 1977. Lefebvre, "Gas Turbine Combustion," McGraw-Hill, New York, 1983. Strehlow, "Combustion Fundamentals," McGraw-Hill, New York, 1984. Williams et al., "Fundamental Aspects of Solid Propellant Rockets," *Agardograph*, 116, Oct. 1969. Basic thermodynamic table type information needed in this area is found in Glushko et al., "Thermodynamic and Thermophysical Properties of Combustion Products," Moscow, and IPST translation; Gordon, NASA Technical Paper 1906, 1982; "JANAF Thermochemical Tables," NSRDS-NBS-37, 1971.

Fuels For special properties of various fuels, see Sec. 7. In general, fuels may be classed under three heads: (1) gaseous fuels, (2) liquid fuels, and (3) solid fuels.

The combustible elements that characterize fuels are carbon, hydrogen, and, in some cases, sulphur. The complete combustion of carbon gives, as a product, carbon dioxide, CO_2; the combustion of hydrogen gives water, H_2O.

Combustion of Gaseous and Liquid Fuels

Combustion Equations The approximate molecular weights of the important elements and compounds entering into combustion calculations are:

Material	C	H_2	O_2	N_2	CO	CO_2	H_2O	CH_4	C_2H_4	C_2H_4O	S	NO—NO_2	SO_2
Molecular weight	12	2	32	28	28	44	18	16	28	46	32	30 46	64

For the elements C and H, the equations of complete combustion are

$$\begin{cases} C + O_2 = CO_2 & H_2 + \tfrac{1}{2}O_2 = H_2O \\ 12\text{ lb} + 32\text{ lb} = 44\text{ lb} & 2\text{ lb} + 16\text{ lb} = 18\text{ lb} \end{cases}$$

For a combustible compound, as CH_4, the equation may be written

$$CH_4 + x \cdot O_2 = y \cdot CO_2 + z \cdot H_2O$$

Taking, as a basis, 1 molecule of CH_4 and making a balance of the atoms on the two sides of the equation, it is seen that

$$y = 1 \qquad z = 2 \qquad 2x = 2y + z \qquad \text{or} \qquad x = 2$$

Hence,

$$\begin{cases} CH_4 + 2O_2 = CO_2 + 2H_2O \\ 16\text{ lb} + 64\text{ lb} = 44\text{ lb} + 36\text{ lb} \end{cases}$$

The coefficients in the combustion equation give the combining volumes of the gaseous components. Thus, in the last equation 1 ft³ of CH_4 requires for combustion 2 ft³ of oxygen and the resulting gaseous products of combustion are 1 ft³ of CO_2 and 2 ft³ of H_2O. The coefficients multiplied by the corresponding molecular weights give the combining weights. These are conveniently referred to 1 lb of the fuel. In the combustion of CH_4, for example, 1 lb of CH_4 requires $64/16 = 4$ lb of oxygen for complete combustion and the products are $44/16 = 2.75$ lb of CO_2 and $36/16 = 2.25$ lb of H_2O.

Air Required for Combustion The composition of air is approximately 0.232 O_2 and 0.768 N_2 on a pound basis, or 0.21 O_2 and 0.79 N_2 by volume. For exact analyses, it may be necessary sometimes to take account of the water vapor mixed with the air, but ordinarily this may be neglected.

The minimum amount of air required for the combustion of 1 lb of a fuel is the quantity of oxygen required, as found from the combustion equation, divided by 0.232. Likewise, the minimum volume of air required for the combustion of 1 ft³ of a fuel gas is the volume of oxygen divided by 0.21. For example, in the combustion of CH_4 the air required per pound of CH_4 is $4/0.232 = 17.24$ lb and the volume of air per cubic foot of CH_4 is $2/0.21 = 9.52$ ft³. Ordinarily, more air is provided than is required for complete combustion. Let a denote the minimum amount required and xa the quantity of air admitted; then $x - 1$ is the excess coefficient.

Products of Combustion The products arising from the complete combustion of a fuel are CO_2, H_2O, and, if sulphur is present, SO_2. Accompanying these are the nitrogen brought in with the air and the oxygen in the excess of air. Hence the products of complete combustion are principally CO_2, H_2O, N_2, and O_2. The presence of CO indicates incomplete combustion. In simple calculations the reaction of nitrogen with oxygen to form noxious oxides, often termed NO_x, such as nitric oxide (NO), nitrogen peroxide (NO_2), etc., is neglected. In practice, an automobile engine is run at a lower compression ratio to reduce NO_x formation. The reduced pollution is bought at the

Specimen S1 Serial #B3591

Equipment List 1: 30-foot Free Drop

Description	Enter the Model and Serial Number	Attach Inspection Report or Calibration Certificate
Drop Surface, Drawing AT10122, Rev. B	01	SEE ATTACH
Weight Scale	OHAUS / 35014	SEE ATTACH
Thermometer	OMEGA / ENG-12	SEE ATTACH
Thermocouple flexible probe	OMEGA / ENG-11	SEE ATTACH
Thermocouple surface probe	OMEGA / ENG-13	SEE ATTACH
Record any additional tools used to facilitate the test and attach the appropriate inspection report or calibration certificate.		
THERMOCOUPLE STRAIGHT PROBE	OMEGA / ENG-14	SEE ATTACH

Verified by:	Signature	Date
Engineering	S. Grassi	12 JAN 98
Regulatory Affairs	L. [illegible]	12 Jan 98
Quality Assurance	B. Mafy	12 Jan 98

Checklist 1: 30-foot Free Drop

Test Location: VALLEY TREE GROVELAND MA **Attempt Number:** 1

Step	Specimen (Serial #B3591) DW 8 JAN 98 A S1	Specimen B	Specimen C	Specimen D
1. Measure and record test specimen's weight.	DW 8 JAN 98	N/A	N/A	N/A
Record the specimen's weight:	54.5 lbs			
Note the instrument used:	35014	35014	35014	35014
2. Immerse the test specimen in dry ice as needed to bring specimen temperature below -40° C.	DW 8 JAN 98			
Steps 1 through 2 witnessed by:				
Engineering	SD 12 JAN 98			
Regulatory Affairs	LP 12 Jan 98			
Quality Assurance	KAA 12 Jan 98			
3. Measure the ambient temperature.	DW 8 JAN 98			
Record ambient temperature:	36.9° F			
Note the instrument used:	ENG-12 / ENG-14	ENG-12 / ENG-14	ENG-12 / ENG-14	ENG-12 / ENG-14
4. Attach the test specimen to the release mechanism.	DW 8 JAN 98			
5. Begin video recording of test so that the impact is recorded.	DW 8 JAN 98			
6. Measure the temperature of the specimen. Ensure that the specimen is below -40° C.	DW 8 JAN 98			
Record the specimen's internal temperature:	-71.4°C			
Note the instrument used:	ENG-12 / ENG-11	ENG-12 / ENG-11	ENG-12 / ENG-11	ENG-12 / ENG-11
Record the specimen's surface temperature.	-64.7°C			
Note the instrument used:	ENG-12 / ENG-13	ENG-12 / ENG-13	ENG-12 / ENG-13	ENG-12 / ENG-13
7. Lift and orient the test specimen as shown in the referenced figure for the specimen.	Figure 6 on Page 14	Figure 7 on Page 15	Figure 6 on Page 14	Figure 7 on Page 15
8. Inspect the orientation setup and verify the drop height.	DW 8 JAN 98			
9. Photograph the setup in at least two perpendicular planes.	DW 8 JAN 98			

Checklist 1: 30-foot Free Drop (Continued)

Test Location: GROVELAND, MA. **Attempt Number:** 1

Step	Specimen A S1	Specimen B	Specimen C	Specimen D
Steps 3 through 9 witnessed by:		N/A	N/A	N/A
Engineering	12 JAN 98			
Regulatory Affairs	LP 12 Jan 98			
Quality Assurance	KMA 10 Jan 98			
10. Release the test specimen.	DW 8 JAN 98			
11. Measure the surface temperature of the test specimen.	DW 8 JAN 98			
Record the surface temperature:	-39.6°C			
Note the instrument used:	ENG-12 ENG-13	ENG-12 ENG-13	ENG-12 ENG-13	ENG-12 ENG-13
12. Measure and record the test specimen's weight.	DW 8 JAN 98			
Record the specimen's weight:	54.5 lbs			
Note the instrument used:	35014	35014	35014	35014
13. Pause the video recorder. Ensure that the point of impact and orientation specified in the plan have been achieved and recorded.	DW 8 JAN 98			
14. Record damage to test specimen on a separate sheet and attach.	DW 8 JAN 98			
Steps 10 through 14 witnessed by:				
Engineering	12 JAN 98			
Regulatory Affairs	LP 12 Jan 98			
Quality Assurance	KMA 10 Jan 98			

Checklist 1: 30-foot Free Drop (Continued)

Test Location: GROVELAND, MA. **Attempt Number:** 1

Step	Specimen A S1	Specimen B	Specimen C	Specimen D
15. Engineering, Regulatory Affairs and Quality Assurance make a preliminary assessment relative to 10 CFR 71. Record the assessment on a separate sheet and attach. Determine what changes are necessary in package orientation for the puncture test to achieve maximum damage.	18 Feb 98 See Attached	N/A	N/A	N/A

Test Data Accepted by (Signature):		Date:
Engineering	S. Gr[illegible]	18 Feb 98
Regulatory Affairs	L. [illegible]	22 Jan 98
Quality Assurance	C. [illegible]	18 Feb 98

Serial #B3591

30 FOOT FREE DROP. (DO) 9 JAN 97

SPECIMEN "A" ORIENTATION

S1: HIT ON ANGLE REAR END PLATE BOTTOM RIGHT SIDE

DENTED IN 35°

.165 GAP BETWEEN SHELL & REAR END PLATE

FRONT NUT WILL NOT ROTATE

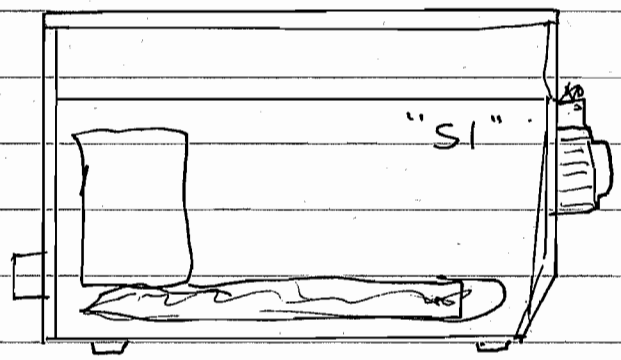

(KNA) 14 Jan 98

ASSESSMENT: S1, 30 FOOT FREE DROP.

TEST EXECUTED PER TEST PLAN #74, therefore it WAS PERFORMED IN ACCORDANCE WITH 10 CFR 71.

DROP ~~[illegible]~~ (SD) 14 FEB 98 MISSED IMPACT HIT ORIENTATION.

BASED ON DAMAGE AND MISSED HIT, THE GROUP AGREED TO NOT PROCEED TO NEXT ~~TESTS~~ (SD) 14 FEB 98 TESTS.

(SD) 18 FEB 98

Equipment List 1: 30-foot Free Drop

Specimen S2 Serial#B35

Description	Enter the Model and Serial Number	Attach Inspection Report or Calibration Certificate
Drop Surface, Drawing AT10122, Rev. B	01	SEE ATTACH
Weight Scale	35014	SEE ATTACH
Thermometer	ENG-12	SEE ATTACH
Thermocouple flexible probe	ENG-11	SEE ATTACH
Thermocouple surface probe	ENG-13	
Record any additional tools used to facilitate the test and attach the appropriate inspection report or calibration certificate.		
THERMOCOUPLE STRAIGHT PROBE	ENG-14	SEE ATTACH

Verified by:	Signature	Date
Engineering	[illegible]	14 Jan 98
Regulatory Affairs	[illegible]	12 Jan 98
Quality Assurance	[illegible]	12 Jan 98

Checklist 1: 30-foot Free Drop

Test Location: VALLEY TREE GROVELAND MA **Attempt Number:** 1

Step	Specimen A	Specimen B	Specimen C	Specimen D
1. Measure and record test specimen's weight.	DW 24 DEC 97	NA	NA	NA
Record the specimen's weight:	55.5 lb			
Note the instrument used:	35014	35014	35014	35014
2. Immerse the test specimen in dry ice as needed to bring specimen temperature below -40° C.	DW 24 DEC 97			
Steps 1 through 2 witnessed by:				
Engineering	14 Jan 98			
Regulatory Affairs	12 Jan 98			
Quality Assurance	KMA 12 Jan 98			
3. Measure the ambient temperature.	24 Dec 97 MB			
Record ambient temperature:	35.6 °F			
Note the instrument used:	ENG-12 / ENG-14	ENG-12 / ENG-14	ENG-12 / ENG-14	ENG-12 / ENG-14
4. Attach the test specimen to the release mechanism.	DW 24 DEC 97			
5. Begin video recording of test so that the impact is recorded.	DW 24 DEC 97			
6. Measure the temperature of the specimen. Ensure that the specimen is below -40° C.	24 Dec 97 MB			
Record the specimen's internal temperature:	-65.6 °C			
Note the instrument used:	ENG-12 / ENG-11	ENG-12 / ENG-11	ENG-12 / ENG-11	ENG-12 / ENG-11
Record the specimen's surface temperature.	-57.1 °C			
Note the instrument used:	ENG-12 / ENG-13	ENG-12 / ENG-13	ENG-12 / ENG-13	ENG-12 / ENG-13
7. Lift and orient the test specimen as shown in the referenced figure for the specimen.	Figure 6 on Page 14	Figure 7 on Page 15	Figure 6 on Page 14	Figure 7 on Page 15
8. Inspect the orientation setup and verify the drop height.	DW 24 DEC 97			
9. Photograph the setup in at least two perpendicular planes.	DW 24 DEC 97			

Equipment List 1: 30-foot Free Drop

Specimen D Serial #B3590

Description	Enter the Model and Serial Number	Attach Inspection Report or Calibration Certificate
Drop Surface, Drawing AT10122, Rev. B	01	SEE ATTACH
Weight Scale	35014	SEE ATTACH
Thermometer	ENG-12	SEE ATTACH
Thermocouple flexible probe	ENG-11	SEE ATTACH
Thermocouple surface probe	ENG-13	
Record any additional tools used to facilitate the test and attach the appropriate inspection report or calibration certificate.		
THERMOCOUPLE STRAIGHT PROBE	ENG-14	SEE ATTACH

Verified by:	Signature	Date
Engineering	[illegible]	14 Jan 98
Regulatory Affairs	[illegible]	12 Jan 98
Quality Assurance	[illegible]	12 Jan 98

Checklist 1: 30-foot Free Drop

Test Location: VALLEY TREE GROVELAND MA **Attempt Number:** 2nd

Step	Specimen A	Specimen B	Specimen C	Specimen D (Unit #B2590)
1. Measure and record test specimen's weight.	MA	MA	MA	24 Dec. 97 MB
Record the specimen's weight:				54.84 lb
Note the instrument used:	35014	35014	35014	35014
2. Immerse the test specimen in dry ice as needed to bring specimen temperature below -40° C.				DW 24 DEC 97
Steps 1 through 2 witnessed by:				
Engineering				MA Jan 98
Regulatory Affairs				12 Jan 98
Quality Assurance				KNA 12 Jan 98
3. Measure the ambient temperature.				24 Dec. 97 MB
Record ambient temperature:				38.0° F
Note the instrument used:	ENG-12 / ENG-14	ENG-12 / ENG-14	ENG-12 / ENG-14	ENG-12 / ENG-14
4. Attach the test specimen to the release mechanism.				DW 24 DEC 97
5. Begin video recording of test so that the impact is recorded.				DW 24 DEC 97
6. Measure the temperature of the specimen. Ensure that the specimen is below -40° C.				24 Dec. 97 MB
Record the specimen's internal temperature:				-72.5° C
Note the instrument used:	ENG-12 / ENG-11	ENG-12 / ENG-11	ENG-12 / ENG-11	ENG-12 / ENG-11
Record the specimen's surface temperature.				-50.3° C
Note the instrument used:	ENG-12 / ENG-13	ENG-12 / ENG-13	ENG-12 / ENG-13	ENG-12 / ENG-13
7. Lift and orient the test specimen as shown in the referenced figure for the specimen.	Figure 6 on Page 14	Figure 7 on Page 15	Figure 6 on Page 14	Figure 7 on Page 15
8. Inspect the orientation setup and verify the drop height.				DW 24 DEC 97
9. Photograph the setup in at least two perpendicular planes.				DW 24 DEC 97

Checklist 1: 30-foot Free Drop (Continued)

Test Location: GROVELAND, MA. **Attempt Number:** 2

Step	Specimen A	Specimen B	Specimen C	Specimen D
Steps 3 through 9 witnessed by:	NA	NA	NA	
Engineering				14 Jan 98
Regulatory Affairs				12 Jan 98
Quality Assurance				KNA 12 Jan 98
10. Release the test specimen.				DCW 24 DEC 97
11. Measure the surface temperature of the test specimen.				24 Dec 97 MB
Record the surface temperature:				-48.3°C
Note the instrument used:	~~ENG-12~~ ENG-13	~~ENG-12~~ ENG-13	~~ENG-12~~ ENG-13	~~ENG-12~~ ENG-13
12. Measure and record the test specimen's weight.				24 Dec 97 MB
Record the specimen's weight:				53.75 lb
Note the instrument used:	35014	35014	35014	35014
13. Pause the video recorder. Ensure that the point of impact and orientation specified in the plan have been achieved and recorded.				DCW 24 DEC 97
14. Record damage to test specimen on a separate sheet and attach.				DCW 24 DEC 97
Steps 10 through 14 witnessed by:				
Engineering				14 Jan 98
Regulatory Affairs				12 Jan 98
Quality Assurance				KNA 12 Jan 98

Specimen A Serial# B3587
B #B3588
C #B3589
D #B35

Equipment List 1: 30-foot Free Drop

Description	Enter the Model and Serial Number	Attach Inspection Report or Calibration Certificate
Drop Surface, Drawing AT10122, Rev. B	01	See Attach.
Weight Scale	35014	See Attach.
Thermometer	ENG-12	See Attach.
Thermocouple flexible probe	ENG-11	See Attach.
Thermocouple surface probe	ENG-13	
Record any additional tools used to facilitate the test and attach the appropriate inspection report or calibration certificate.		
Thermocouple Straight Probe	ENG-14	See Attach.

Verified by:	Signature	Date
Engineering	[illegible]	14 Jan 98
Regulatory Affairs	R. Pidolak	10 Jan 98
Quality Assurance	K. N [illegible]	12 Jan 98

Checklist 1: 30-foot Free Drop

Test Location: Valley Tree Groveland MA **Attempt Number:** 1

Step Serial#	B3587 Specimen A	#3588 Specimen B	#3589 Specimen C	#3590 Specimen D
1. Measure and record test specimen's weight.	23 Dec 97 MAB	24 Dec 97 MAB	23 Dec 97 MAB	24 Dec 97 MAB
Record the specimen's weight:	55.20 lb	54.90 lb	55.60 lb	54.85 lb
Note the instrument used:	35014	35014	35014	35014
2. Immerse the test specimen in dry ice as needed to bring specimen temperature below -40° C.	DW 23 DEC 97	DW 24 DEC 97	DW 23 DEC 97	DW 24 DEC 97
Steps 1 through 2 witnessed by:				
Engineering	14 Jan 98	14 Jan 98	14 Jan 98	14 Jan 98
Regulatory Affairs	12 Jan 98	12 Jan 98	12 Jan 98	12 Jan 98
Quality Assurance	KNA 12 Jan 98	KNA 12 Jan 98	KNA 12 Jan 98	KNA 12 Jan 98
3. Measure the ambient temperature.	23 Dec 97 MAB	24 Dec 97 MAB	23 Dec 97 MAB	24 Dec 97 MAB
Record ambient temperature:	32.2°F	35.4°F	35.1°F	38.6°F
Note the instrument used:	ENG 12 ENG 14	ENG 12 ENG 14	ENG 12 ENG 14	ENG 12 ENG 14
4. Attach the test specimen to the release mechanism.	DW 23 DEC 97	DW 24 DEC 97	DW 23 DEC 97	DW 24 DEC 97
5. Begin video recording of test so that the impact is recorded.	DW 23 DEC 97	DW 24 DEC 97	DW 23 DEC 97	DW 24 DEC 97
6. Measure the temperature of the specimen. Ensure that the specimen is below -40° C.	DW 23 DEC 97	24 Dec 97 MAB	DW 23 DEC 97	24 Dec 97 MAB
Record the specimen's internal temperature:	-74.1°C	-54.6°C	-71.6°C (*)	-72.5°C
Note the instrument used:	ENG 12 ENG 11	ENG 12 ENG 11	ENG 12 ENG 11	ENG 12 ENG 11
Record the specimen's surface temperature.	-52.9°C	-56.9°C	-70.6°C	-67.5°C
Note the instrument used:	ENG 12 ENG 13	ENG 12 ENG 13	ENG 12 ENG 13	ENG 12 ENG 13
7. Lift and orient the test specimen as shown in the referenced figure for the specimen.	Figure 6 on Page 14	Figure 7 on Page 15	Figure 6 on Page 14	Figure 7 on Page 15
8. Inspect the orientation setup and verify the drop height.	DW 23 DEC 97	DW 24 DEC 97	DW 23 DEC 97	DW 24 DEC 97
9. Photograph the setup in at least two perpendicular planes.	23 Dec 97 MAB	24 Dec 97 MAB	23 Dec 97 MAB	DW 24 DEC 97

(*) KNA for M 12 Jan

Checklist 1: 30-foot Free Drop (Continued)

Test Location: VALLEY TREE GROVELAND MA **Attempt Number:** 1

Step	Specimen A	Specimen B	Specimen C	Specimen D
Steps 3 through 9 witnessed by:				
Engineering	14 Jan 98	14 Jan 98	14 Jan 98	14 Jan 98
Regulatory Affairs	12 Jan 98	12 Jan 98	12 Jan 98	12 Jan 98
Quality Assurance	KNA 12 Jan 98	KNA 12 Jan 98	KNA 12 Jan 98	KNA 12 Jan 98
10. Release the test specimen.				
11. Measure the surface temperature of the test specimen.	DW 23 DEC 97	24 Dec 97 MTB	DW 23 DEC 97	24 Dec 97 MTB
Record the surface temperature:	-44.2°C	-54.9°C	-42.6°C	-60.0°C
Note the instrument used:	ENG 12 ENG 13	ENG 12 ENG 13	ENG 12 ENG 13	ENG 12 ENG 13
12. Measure and record the test specimen's weight.	DW 23 DEC 97	24 Dec 97 MTB	DW 23 DEC 97	24 Dec 97 MTB
Record the specimen's weight:	55.25 lb	54.50 lb	55.50 lb	54.84 lb
Note the instrument used:	35014	35014	35014	35014
13. Pause the video recorder. Ensure that the point of impact and orientation specified in the plan have been achieved and recorded.	DW 23 DEC 97	DW 24 DEC 97	DW 23 DEC 97	DW 24 DEC 97
14. Record damage to test specimen on a separate sheet and attach.	DW 29 DEC 97	DW 29 DEC 97	DW 29 DEC 97	DW 29 DEC 97
Steps 10 through 14 witnessed by:				
Engineering	14 Jan 98	14 Jan 98	14 Jan 98	14 Jan 98
Regulatory Affairs	12 Jan 98	12 Jan 98	12 Jan 98	12 Jan 98
Quality Assurance	KNA 12 Jan 98	KNA 12 Jan 98	KNA 12 Jan 98	KNA 12 Jan 98

Checklist 1: 30-foot Free Drop (Continued)

Test Location: Valley Tree Groveland, MA **Attempt Number:** 1

Step	Specimen A	Specimen B	Specimen C	Specimen D
15. Engineering, Regulatory Affairs and Quality Assurance make a preliminary assessment relative to 10 CFR 71. Record the assessment on a separate sheet and attach. Determine what changes are necessary in package orientation for the puncture test to achieve maximum damage.	See	Attached	14 Jan 98	

Test Data Accepted by (Signature):	Date:
Engineering	14 Jan 98
Regulatory Affairs	22 Jan 98
Quality Assurance	14 Jan 98

30-foot Free Drop Test Assessment

The test was executed per test plan #74, therefore it was performed in accordance with 10 CFR 71.

Unit S2 was needed for replacing Unit C, since Unit C did not hit the target impact point. There was no adjustment to the torque values of the end plate screws. The penetration test and 4-foot free drop test was performed on S2 before the 30-foot free drop test.

Unit D was dropped twice since it did not hit the target impact point. Second attempt hit same impact point as previous. This produced worst damage of all attempts.

Based on assessment of damage, there is no indication of any damage that would alter original acceptance of test specimens to meet requirements of 10 CFR 71.

As there is no structural damage to the dropped units, conclude that testing will continue as described in test plan 74.

Except for specimen B and D, there was no change in orientation for the puncture test. Orientations for specimen B and D was changed to try to peel back the area of the end plate left by the removed handle.

14 Jan 98

KMA 14 Jan 98

Intermediate Test Inspection

Damage recorded for each test specimen. See attached.

It was decided to delay the radiation profile of the test specimen, since it could possibly affect their structural integrity and affect the outcome of the thermal test.

14 Jan 98

KNA 14 Jan 98

22 Jan 98

30 FOOT FREE DROP & PUNCTURE TEST

DCQ 29 DEC 97

SPECIMEN A HIT REAR PLATE BOTTOM Serial #B3587	VISUAL: BOTTOM SHELL CONVEXED DCQ 29 DEC 97 1/4" CENTER OF SHELL (BOTTOM) LEFT SIDE .168 GAP OPENING BETWEEN SHELL & REAR PLATE, CROWN OF REAR PLATE 3 3/4" RIGHT SIDE .149 GAP BETWEEN SHELL & REAR PLATE CROWN OF REAR PLATE 4" 10.280 W FRONT TO REAR
SPECIMEN B HIT FRONT PLATE TOP Serial #B3588	VISUAL: HANDLE BROKEN OFF, FRONT PLATE TOP BENT IN 45° REAR END PLATE BENT OUT 13° (1/8 GAP ON TOP REAR) NO GAP ON SHELL & FRONT, OR REAR PLATES 10" W FRONT TO REAR CROWN FRONT PLATE 3 1/2 HIGH CONVEX 1/16", FRONT NUT DOESNT SPIN
SPECIMEN S2 HIT REAR PLATE BOTTOM Serial #B3592	GAP .147 BOTH SIDES CROWN 4" HIGH (CONVEXED) BOTTOM SHELL CONVEXED 1/4" ~~min~~ 1/2" FROM MID POINT TO REAR FRONT NUT SPINS FREELY 10.255 / 10.270 ~~W~~ FRONT TO REAR
SPECIMEN "D" HIT FRONT PLATE TOP RIGHT SIDE Serial #B3590	GAP .480 FRONT PLATE TO SHELL 4 1/8" TO CROWN FROM BASE .094 GAP TOP SHELL TO REAR PLATE, SHELL TWIST APPROX 1/8"

KNA 12 Jan 98

12 Jan 98

14 Jan 98

30 FT FREE DROP 29 DEC 97

SPECIMEN C
HIT BOTTOM
REAR PLATE
CORNER

Serial# B3589

VISUAL: DAMAGE TO BOTTOM LEFT CORNER OF REAR PLATE & SHELL

DIDN'T HIT ON TARGET

.200 GAP BETWEEN SHELL & REAR PLATE

DENT APPROX 1" REAR PLATE LEFT BOTTOM

KNA 12 Jan 98

LLP 12 Jan 98

14 Jan 98

Specimen A Serial # B3587
B # B3588
D # B3590
S2 # B3592

Equipment List 2: Puncture Test

Description	Enter the Model and Serial Number	Attach Inspection Report or Calibration Certificate
Drop Surface, Drawing AT10122, Rev. B	SN-01	SEE ATTACH
Puncture Billet, Drawing CT10119, Rev. C	SN-01	SEE ATTACH
Weight Scale	OHAUS DS10 # 35014	SEE ATTACH
Thermometer	OMEGA HH21 # ENG-12	SEE ATTACH
Thermocouple flexible probe	# ENG-11	SEE ATTACH
Thermocouple surface probe	#ENG-13	SEE ATTACH
Record any additional tools used to facilitate the test and attach the appropriate inspection report or calibration certificate.		
Thermocouple Straight Probe	# ENG-14	SEE ATTACH

Verified by:	Signature	Date
Engineering	[illegible]	14 Jan 98
Regulatory Affairs	[illegible]	12 Jan 98
Quality Assurance	[illegible]	12 Jan 98

Checklist 2: Puncture Test

Test Location: GROVE LAND MA **Attempt Number:** 1

Step	Specimen A (Serial # B3587)	Specimen B (B3588)	Specimen C (B3592)	Specimen D (B3590)
1. Immerse the test specimen in dry ice as need to bring the specimen's temperature below -40° C.	DW 24 DEC 97	DW 24 DEC 97	DW 24 DEC 97	DW 24 DEC 97
Step 1 witnessed by:				
Engineering	14 Jan 98	14 Jan 98	14 Jan 98	14 Jan 98
Regulatory Affairs	12 Jan 98	12 Jan 98	12 Jan 98	12 Jan 98
Quality Assurance	KNA 12 Jan 98	KNA 12 Jan 98	KNA 12 Jan 98	KNA 12 Jan 98
2. Measure the weight of the specimen.	24 Dec 97 MRB	24 Dec 97 MRB	24 Dec 97 MRB	24 Dec 97 MRB
Record the specimen's weight:	55.20 lb	54.50 lb	55.01 lb	54.84 lb
Note instrument used:	#35014	#35014	#35014	#35014
3. Measure the ambient temperature.	DW 24 DEC 97	DW 24 DEC 97	DW 24 DEC 97	DW 24 DEC 97
Record ambient temperature:	36.8 °F	35.6 °F	35.3 °F	31.6 °F
Note the instrument used:	ENG-12 #ENG-14	ENG-12 #ENG-14	ENG-12 #ENG-14	ENG-12 #ENG-14
4. Attach the test specimen to the release mechanism.	DW 24 DEC 97	DW 24 DEC 97	DW 24 DEC 97	DW 24 DEC 97
5. Begin video recording of test so that the impact is recorded.	DW 24 DEC 97	DW 24 DEC 97	DW 24 DEC 97	DW 24 DEC 97
6. Measure the surface temperature of the specimen. Ensure that the specimen is below -40° C.	24 Dec 97 MRB	24 Dec 97 MRB	24 Dec 97 MRB	24 Dec 97 MRB
Record the specimen surface temperature:	-70.4 °C	-42.2 °C	-57.2 °C	-58.5 °C
Note the instrument used:	ENG-12 #ENG-13	ENG-12 #ENG-13	ENG-12 #ENG-13	ENG-12 #ENG-13
7. Lift and orient the test specimen as shown in the referenced figure for the specimen.	Figure 8 on Page 18	Figure 9 on Page 19	Figure 8 on Page 18	Figure 9 on Page 19
8. Inspect the orientation setup and verify drop height.	DW 24 DEC 97	DW 24 DEC 97	DW 24 DEC 97	DW 24 DEC 97

Checklist 2: Puncture Test (Continued)

Test Location: VALLEY TREE GROVE LAND, MA. **Attempt Number:** 1

Step	Specimen A	Specimen B	Specimen C S-2	Specimen D
9. Photograph the setup in at least two perpendicular planes.	DW 24 DEC 97	DW 24 DEC 97	DW 24 DEC 97	DW 24 DEC 97
Steps 2 through 9 witnessed by:				
Engineering	14 Jan 98	14 Jan 98	14 Jan 98	14 Jan 98
Regulatory Affairs	12 Jan 98	12 Jan 98	12 Jan 98	12 Jan 98
Quality Assurance	KNA 12 Jan 98	KNA 12 Jan 98	KNA 12 Jan 98	KNA 12 Jan 98
10. Release the test specimen.	DW 24 DEC 97	DW 24 DEC 97	DW 24 DEC 97	DW 24 DEC 97
11. Measure the surface temperature of the test specimen.	24 Dec. 97 MRB	24 Dec 97 MRB	24 Dec 97 MRB	24 Dec 97 MRB
Record the surface temperature:	-65.2 °C	-42.2 °C	-40.1 °C	-48.7 °C
Note the instrument used:	ENG-12 #ENG-13	ENG-12 #ENG-13	ENG-12 #ENG-13	ENG-12 #ENG-13
12. Measure and record the test specimen's weight.	24 Dec. 97 MRB	24 Dec. 97 MRB	24 Dec. 97 MRB	24 Dec. 97 MRB
Record the specimen's weight:	55.05 lb	53.9 lb	55.05 lb	55.20 lb
Note the instrument used:	#35014	#35014	#35014	#35014
13. Pause the video recorder. Ensure that the point of impact and orientation specified in the plan have been achieved and recorded.	DW 24 DEC 97	DW 24 DEC 97	DW 24 DEC 97	DW 24 DEC 97
14. Record damage to test specimen on a separate sheet and attach.	DW 29 DEC 97	DW 29 DEC 97	DW 29 DEC 97	DW 29 DEC 97
Steps 10 through 14 witnessed by:				
Engineering	14 Jan 98	14 Jan 98	14 Jan 98	14 Jan 98
Regulatory Affairs	12 Jan 98	12 Jan 98	12 Jan 98	12 Jan 98
Quality Assurance	KNA 12 Jan 98	KNA 12 Jan 98	KNA 12 Jan 98	KNA 12 Jan 98

Checklist 2: Puncture Test (Continued)

Test Location: VALLEY TREE GROVELAND, MA. **Attempt Number:** 1

Step	Specimen A	Specimen B	Specimen C	Specimen D
15. Engineering, Regulatory Affairs and Quality Assurance make a preliminary assessment relative to 10 CFR 71. Record the assessment on a separate sheet and attach. Determine the package orientation for the thermal test that will achieve maximum damage.	see attached		14 Jan 98	

Test Data Accepted by (Signature):	Date:
Engineering	14 Jan 98
Regulatory Affairs	22 Jan 98
Quality Assurance	14 Jan 98

Puncture Test Assessment

The puncture test was executed per test plan #74, therefore it was performed in accordance with 10 CFR 71.

Based on assessment of damage, there is no indication of any damage that would alter original acceptance of test specimens to meet requirements of 10 CFR 71.

As there is no structural damage to the dropped units, conclude that testing will continue as described in test plan 74.

Since the damage for specimen B did not produce a gap in the shell or end plates, It was decided to not perform the thermal test on this specimen.

There is no special orientation for the thermal test. All specimen to be oriented on their feet. This will allow optimal air flow in and around open gap areas of the damaged shell and end plates.

14 Jan 98

KMA 14Jan98

Specimen A Serial #B3587
D #B3590
S2 #B3592

Equipment List 3: Thermal Test

Description	Enter the Model and Serial Number	Attach Inspection Report or Calibration Certificate
Air Flowmeter	3367 / ENG-08	SEE ATTACH
Thermocouple (internal)	ENG-18A	SEE ATTACH
Thermocouple (external)	ENG-17A	SEE ATTACH
Thermocouple (oven)	ENG-16A	SEE ATTACH
Temperature recorder	ENG-16/ENG-17/ENG-18	SEE ATTACH
Record any additional tools used to facilitate the test and attach the appropriate inspection report or calibration certificate.		
THERMOMETER	ENG-12	SEE ATTACH
THERMOCOUPLE PROBE	ENG-14	SEE ATTACH

Verified by:	Signature	Date
Engineering		14 Jan 98
Regulatory Affairs		12 Jan 98
Quality Assurance		12 Jan 98

Checklist 3: Thermal Test

Test Location: MFG SCIENCES OAKRIDGE, TN. **Attempt Number:** 1

Step	Specimen A #B3587	Specimen B	Specimen C #B3592	Specimen D #B3590
1. Pre-heat the oven to a temperature above 800° C.	DW 3:24 PM 902.2 C		DW 3:24 PM 902.2	DW 3:24 PM 902.2°c
2. Attach the thermocouples the specimen's internal and external measuring points.	DW 30 DEC 97		DW 30 DEC 97	DW 30 DEC 97
3. Place the package in the oven and close the oven door.	DW 30 DEC 97		DW 30 DEC 97	DW 30 DEC 97
Record the date and time that the package is placed in oven.	3:25 PM 844°c		6:16 PM 807.9°c	4:50 PM 852°c
4. When the specimen's internal temperature exceeds 800° C, start the air flow into the oven. Record the time.	4:06 PM DW 30 DEC 97		7:25 PM DW 30 DEC 97	5:34 PM DW 30 DEC 97
Steps 1 through 4 witnessed by:				
Engineering	14 Jan 98		14 Jan 98	14 Jan 98
Regulatory Affairs	12 Jan 98		12 Jan 98	12 Jan 98
Quality Assurance	KMA 12 Jan 98		KMA 12 Jan 98	KMA 12 Jan 98
5. Measure the oven temperature, the specimen's internal and external temperatures and the air flow rate.	DW 30 DEC 97		DW 30 DEC 97	DW 30 DEC 97
Record the oven temperature:	904°c		900.7°c	900.0°c
Note instrument used:	ENG-16 / ENG-16A		ENG-16 / ENG-16A	ENG-16 / ENG-16A
Record the specimen's internal temperature:	800°c		800.7°c	801.1°c
Note instrument used:	ENG-18 / ENG-18A		ENG-18 / ENG-18A	ENG-18 / ENG-18A
Record the specimen's external temperature:	844.3°c		823.8°c	842.2°c
Note instrument used:	ENG-17 / ENG-18A		ENG-17 / ENG-17A	ENG-17 / ENG-17A
Record airflow rate:	10 CFM		10 CFM	10 CFM
Note instrument used:	3367 / ENG-08		3367 / ENG-08	3367 / ENG-08
6. Monitor the internal and external temperatures of the specimen and the oven temperature throughout the 30-minute period to ensure that they are above 800° C.	DW 30 DEC 97		DW 30 DEC 97	DW 30 DEC 97

Checklist 3: Thermal Test (Continued)

Test Location: MFG SCIENCES OAKRIDGE, TN. **Attempt Number:** 1

Step	Specimen A	Specimen B	Specimen C	Specimen D
7. Monitor the airflow throughout the 30-minute period to ensure a rate of at least 9.6 ft^3/min.	30 DEC 97		30 DEC 97	30 DEC 97
8. At the end of the 30-minute period, repeat step 5 using the same measurement devices.	30 DEC 97		30 DEC 97	30 DEC 97
Record the oven temperature:	905.2°c		901.5°c	907.1°c
Record the specimen's internal temperature:	841.2°c		857.0°c	842.5°c
Record the specimen's external temperature:	850.4°c		843.0°c	850.4°c
Record intake air flow velocity:	10 CFM		10 CFM	10 CFM
Steps 5 through 8 witnessed by:				
Engineering	12 Jan 98		12 Jan 98	12 Jan 98
Regulatory Affairs	12 Jan 98		12 Jan 98	12 Jan 98
Quality Assurance	KMA 12 Jan 98		KMA 12 Jan 98	KMA 12 Jan 98
9. Remove test specimen from the oven.	30 DEC 97		30 DEC 97	30 DEC 97
Record time the specimen is removed.	4:36 PM		7:55 pm	6:04
Describe combustion when door is opened to remove specimen.	RED HOT NO FLAMES		RED HOT FLAMES INSIDE	RED HOT SOME FLAMES TOP REAR
NOTE: If specimen continues to burn, let it self-extinguish and cool naturally.				
10. Measure the ambient temperature.	30 DEC 97			30 DEC 97
Record the ambient temperature:	62.3°F		62.3°F	61.9°F
Note the instrument used:	ENG-12 / ENG-14		ENG-12 / ENG-14	ENG-12 / ENG-14
11. Photograph the test specimen and any subsequent damage	30 DEC 97		30 DEC 97	30 DEC 97
12. Record damage to test specimen on a separate sheet and attach.	See photos + videos			
Steps 9 through 12 witnessed by:				
Engineering	12 Feb 98		12 Feb 98	12 Feb 98
Regulatory Affairs	12 Jan 98		12 Jan 98	12 Jan 98
Quality Assurance	KMA 12 Jan 98		KMA 12 Jan 98	KMA 12 Jan 98

Checklist 3: Thermal Test (Continued)

Test Location: MFG SCIENCES OAK RIDGE, TN. **Attempt Number:** 1

Step	Specimen A	Specimen B	Specimen ~~C~~ S2	Specimen D
13. Engineering, Regulatory Affairs and Quality Assurance make a preliminary assessment relative to 10 CFR 71. Record the assessment on a separate sheet and attach.	see attached		see attached	see attached

Test Data Accepted by (Signature):		Date:
Engineering	S. Gen[illegible]	18 FEB 98
Regulatory Affairs	C. Ro[illegible]	18 FEB 98
Quality Assurance	B. M[illegible]	02 MAR 98

Post Thermal Temp. at Mfg. Sources

8:35 AM 31 Dec 97 Room Temp 17.8

Serial #B3587 Specimen A: Internal temp 17.6°C

Serial #B3590 Specimen D: Internal temp ~~54.1~~ MP 31 Dec 97
541.3°C

Serial #B3592 Specimen S2: Internal temp ~~417.3°C~~ MP 31 Dec 97
417.5°C

(D) 31 DEC 97
Spec

(KNA) 31 Dec 97

Assessment - Specimen A (Thermal results)
Serial #B3587

Based on physical appearance of Specimen A, it is probable that additional movement of the shield was due to transport / handling.

The shield in Specimen A appears (based on radiographs) to have experienced lateral movement from time of conclusion of puncture test to arrival back at Amersham after thermal testing. The evidence of lateral movement is the distance the front stube was displaced from the front nut. Comparisons of this position after thermal (and transport) to radiographs taken after puncture indicate an approximate 1/4 inch movement. As the normal test was performed with the 660 flat, there were no forces or loads produced during thermal that could have produced this degree of lateral movement.

In order to validate that the lateral movement was a result of handling and transport, additional specimens will be subject to the thermal test.

In addition observations of the unpacking operation at Amersham of the test units indicate that the test specimens had been packaged with an end plate down, i.e. not in its normal resting position on the feet.

The additional test specimens include:

(1) S_3 - This is a specimen that was originally
Serial #B3586

edge drop. Based on the orientation miss, the puncture test was not performed. Upon examination of C through radiographs and visual observation and mechanical measurements, it was determined that although the damage was not exactly as in Specimen A prior to the thermal test, it would provide information on the amount of possible movement as a result of the thermal test. The stube location in the front nut was similar to that seen on Specimen A. The rear plate on C was not bowed out in the same location as on A, but as the stube was disengaged from the boss of the lock assembly it appeared that the shield would have room to move downward. The teleflex engagement of C was severed.

(SD) 18 FEB 98
CMR 18 FEB 98
(KMA) 02 MAR 98

was corrupted during transport/ handling.

If it doesn't pass profile, information will not be used as it was subjected to four 30 foot drop tests and had ~~the~~ excessive damage. Other test specimens subjected to 1 or 2 30 foot drops did not exhibit the extent of damage shown by EX-1

Radiographs of all three specimens were taken prior to transport & thermal testing. Source position was also taken prior to transport. The source position was taken upon receipt at Manufacturing Sciences to determine actual position prior to thermal.

Radiographs and ~~at~~ source position will be taken when units are cooled down after thermal test to record source position prior to any movement or transport.

(CA) 18 FEB 98

GMR 18 FEB 98

(KMA) 02 MAR 98

TEST PLAN # 74

SPECIMEN "D" - PROFILE RESULTS INDICATE THIS TEST SPECIMEN PASSED THE TEST REQUIREMENTS OF 10 CFR 71.73.

Serial# B3590

SPECIMEN "S2" - THE TEAM AGREED TO NOT PROFILE THIS TEST SPECIMEN. THIS IS BECAUSE THE RESULTS PROBABLY WOULD NOT HAVE MATTERED SINCE THE RESULTS OF SPECIMEN "A" WAS QUESTIONABLE. ALSO, ~~PRESONAL~~ PERSONAL SAFETY WAS CONSIDERED IN THE DECISION NOT TO PROFILE "S2".

Serial# B3592

SD 18 FEB 98

SD 18 FEB 98

CMR 18 FEB 98

KMA 02 MAR 98

SENTINEL

WORKSHEET

I. Device Model 660 Stylo Capacity 140 Ci Isotope IR-192 Source Model 424-9 T10763

II. Maximum acceptable surface reading: 200 mR/hr * If used to show compliance wi normal transport requirement

Maximum acceptable meter reading: 10 mR/hr * For normal transport

1 R/hr * For hypothetical accident conditions of 10 CFR 71.

III. Surface Correction Factors:

(applicable for normal transport only).

Top	1.16
Right	1.28
Front	1.13
Left	1.28
Rear	1.13
Bottom	1.19

IV. Specific Instructions for loading/unloading:

See Attachment

V. Approved By:

[signature]	9 Jan 98
Engineering	Date
[signature]	9 Jan 98
Regulatory	Date
C. Longhan	9 Jan 98
Quality Assurance	Date

Amersham QSA

Profile Worksheet Supplement (PEF-003/97) Supplement # PWS-1/98

4. ALARA Justification

Step 1:

Assuming surface intensity of 5 R/hr, source securement/unsecurement time of 2 minute and working behind supplemental shielding to reduce body intensities to less than 500 mR/hr, exposure estimates for operation as follows:

$$E_{WB} = \left(500\ \frac{mR}{hr} \times\ 0.033\ hr\right) = 17\ mR$$

$$E_{Hand} = \left(5{,}000\ \frac{mR}{hr} \times\ 0.033\ hr\right) = 165\ mR$$

Step 2 and 3:

Dose to personnel the same as general cutting cell work.

Profile Operation:

5 minutes for assessment of surface dose rates and general handling/adjustment at average intensity of 1 R/hr, whole body average dose rate of 200 mR/hr for 15 minutes for one meter dose rate readings.

$$E_{WB} = \left(200\ \frac{mR}{hr} \times\ 0.25\ hr\right) = 50\ mR$$

$$E_{Hand} = \left(1{,}000\ \frac{mR}{hr} \times\ 0.083\ hr\right) = 83\ mR$$

RHP Approval Initials & Date: 9 Jan 98

Profile Worksheet Supplement (PEF-003/97)	Supplement # PWS-1/98
5.	Authorized Individuals: Profile: ☐ RT Qualified & Operationally Approved for Device Profiles ☒ Others: RSO, RAM, E. Shaffer, R. Kelly Steps 2 & 3: ☐ RT Qualified & Operationally Approved for Cutting Cell Procedure ☒ Others: E. Shaffer, R. Kelly, RSO, RAM
6.	Operational Hold-points: None.
7.	Other Applicable Comments/Criteria: None.

RHP Approval Initials & Date: RB 9 Jan 98

SENTINEL

660/660B DEVICE PROFILING FORM

B3588 (KNA) 12 Jan 98

Device Model No.: 660B Device Serial No.: ~~After Thermal~~ TP73 "B" After 30 Ft + Puncture

Model ~~424-9~~ T10163 Source Serial Number: X0016 Activity: 93.2 C

Surface Survey Instrument: AN/PDR 27T Serial No: SM-392401 Cal Due: 3/18/98

One Meter Survey Instrument: Same Serial No: — Cal Due: —

* Non-leaded plug used during profile.

Capacity Corr. factor 1.50

	Surf. Correct	SURFACE READINGS mR/hr ~~Allowed~~ Extrapolated	Actual		ONE METER READINGS mR/hr ~~Allowed~~ Extrapolate	Actual
TOP	1.16	104.4	60	TOP	1.0	0.7
RIGHT	1.28	153.6	80	RIGHT	0.9	0.6
FRONT	1.13	389.9	230	FRONT	2.7	1.8
LEFT	1.28	115.2	60	LEFT	0.75	0.5
REAR	1.13	152.6	90	REAR	1.5	1.0
BOTTOM	1.19	107.1	60	BOTTOM	0.9	0.6

INSPECTOR: L. Podolak DATE: 5 Jan 98 NCR No.: _____

Comments:

(KNA) 12 Jan 98

Amersham QSA

WI-Q05

SENTINEL

660/660B DEVICE PROFILING FORM

B3587 (LNA) 12 Jan 98

Device Model No.: 660B Device Serial No.: ~~After~~ TP73"A" Thermal

Model ~~424-9~~ T10163 Source Serial Number: X0016 Activity: 93.2 Ci

~~Surface~~ <500 mR/hr Survey Instrument: AN/PDR 27T Serial No: SM-392401 Cal Due: 3/18/98

*) ≥ 500 mR/hr ~~One Meter~~ Survey Instrument: Tech-50 Serial No: B-814-S Cal Due: 7/22/98

Capacity Corr. Factor 1.5

	SURFACE READINGS mR/hr		ONE METER READINGS mR/hr	
	~~Allowed~~ Extrapolated for Capacity only	Actual	~~Allowed~~ Extrapolated	Actual
TOP	780	520*		
RIGHT	3 R/hr	2 R/hr*		
FRONT	40.5	27	1.4	0.9
LEFT	3 R/hr	2 R/hr*		
REAR	3 R/hr	2 R/hr*	9.3 R/hr	6.2 R/hr*
BOTTOM	1.8 R/hr	1.2 R/hr*	18	12.0

> 1 R/hr. No addl measurements taken on device.

INSPECTOR: L. Pidolak DATE: 5 Jan 98 NCR No.: _____

Comments:

- No surface corrections made. Actual surface enclosed in plastic bagging which varied in thickness from ½-1".

- Surface doses for general info only. Primary purpose of profile was for 1 meter readings. Surface levels on sides and rear may be higher than recorded. Radiation was a finely collimated beam from s-tube out the rear of the device which was difficult to quantify precisely without receiving addl. extremity exposure.

(LNA) 12 Jan 98

Amersham QSA

WI-Q05

SENTINEL

660/660B DEVICE PROFILING FORM

B3590 (KNA) 12 Jan 98

Device Model No.: 660B Device Serial No.: TP73 "D" After Thermal

Model ~~424-9~~ T10163 Source Serial Number: X0016 Activity: 89.7 Ci

Surface Survey Instrument: Bicron Tech-5a Serial No: B-814-5 Cal Due: 7/22/98

One Meter Survey Instrument: Same Serial No: – Cal Due: –

Capacity Corr. Factor
1.56

	SURFACE READINGS mR/hr	
	~~Allowed~~	Actual
TOP		130
RIGHT		180
FRONT		80
LEFT		50
REAR		90
BOTTOM		50

	ONE METER READINGS mR/hr	
	Extrapolated ~~Allowed~~	Actual
TOP	2.3	1.5
RIGHT	1.9	1.2
FRONT	2.7	1.7
LEFT	2.2	1.4
REAR	4.7	3.0
BOTTOM	1.7	1.1

INSPECTOR: [signature] DATE: 9 Jan 98 NCR No.: _____

Comments:

* Surface of unit enclosed in multiple layers of plastic bags for contamination control of uranium oxide. Thickness varies from 1/4" to 1".

* Surface readings taken for exposure control and general information purposes only.

(KNA) 12 Jan 98

Amersham QSA

WI-Q05

Equipment List 1: 30-foot Free Drop

S3 Serial#B3586

Description	Enter the Model and Serial Number	Attach Inspection Report or Calibration Certificate
Drop Surface, Drawing AT10122, Rev. B	01	SEE ATTACH
Weight Scale	OHAUS / 35014	SEE ATTACH
Thermometer	OMEGA / ENG-12	SEE ATTACH
Thermocouple flexible probe	OMEGA / ENG-11	SEE ATTACH
Thermocouple surface probe	OMEGA / ENG-13	SEE ATTACH
Record any additional tools used to facilitate the test and attach the appropriate inspection report or calibration certificate.		
THERMOCOUPLE STRAIGHT PROBE	OMEGA / ENG-14	SEE ATTACH

Verified by:	Signature	Date
Engineering	[illegible]	14 Jan 98
Regulatory Affairs	L. [illegible]	12 Jan 98
Quality Assurance	C. Rongman	14 Jan 98

Checklist 1: 30-foot Free Drop

Test Location: VALLEY TREE GROVELAND MA Serial# B3586 **Attempt Number:** *

Step	*1 Specimen A ~~B~~ FJ 11 JAN 98 53	*2 Specimen B ~~A~~ FJ 11 JAN 98 53	Specimen C	Specimen D
1. Measure and record test specimen's weight.	55.3 lbs	55.25 lbs	N/A	N/A
Record the specimen's weight:	DW 11 JAN 98	DW 11 JAN 98		
Note the instrument used:	35014	35014	35014	35014
2. Immerse the test specimen in dry ice as needed to bring specimen temperature below -40° C.	DW 11 JAN 98	DW 11 JAN 98		
Steps 1 through 2 witnessed by:				
Engineering	[illegible] 14 Jan 98	[illegible] 14 Jan 98		
Regulatory Affairs	[illegible] 12 Jan 98	[illegible] 12 Jan 98		
Quality Assurance	CMR 14 Jan 98	CMR 14 Jan 98		
3. Measure the ambient temperature.	FJ 11 JAN 98	FJ 11 JAN 98		
Record ambient temperature:	42.6° F	42.6 F		
Note the instrument used:	ENG-12 / ENG-14	ENG-12 / ENG-14	ENG-12 / ENG-14	ENG-12 / ENG-14
4. Attach the test specimen to the release mechanism.	DW 11 JAN 98	DW 11 JAN 98		
5. Begin video recording of test so that the impact is recorded.	DW 11 JAN 98	DW 11 JAN 98		
6. Measure the temperature of the specimen. Ensure that the specimen is below -40° C.	FJ 11 JAN 98	FJ 11 JAN 98		
Record the specimen's internal temperature:	-77.1° C	-77.1° C		
Note the instrument used:	ENG-12 / ENG-11	ENG-12 / ENG-11	ENG-12 / ENG-11	ENG-12 / ENG-11
Record the specimen's surface temperature.	-58.2° C	-51.1° C		
Note the instrument used:	ENG-12 / ENG-13	ENG-12 / ENG-13	ENG-12 / ENG-13	ENG-12 / ENG-13
7. Lift and orient the test specimen as shown in the referenced figure for the specimen.	Figure 6 on Page 14	Figure 7 on Page ~~15~~ 14 CMR	Figure 6 on Page 14	Figure 7 on Page 15
8. Inspect the orientation setup and verify the drop height.	DW 11 JAN 98	DW 11 JAN 98		
9. Photograph the setup in at least two perpendicular planes.	DW 11 JAN 98	DW 11 JAN 98		

Checklist 1: 30-foot Free Drop (Continued)

Test Location: GROVELAND, MA. **Attempt Number:** *

Step	Specimen S3 ~~A~~ *1 DG 11 JAN 98	Specimen S3 ~~B~~ *2 DG 11 JAN 98	Specimen C	Specimen D
Steps 3 through 9 witnessed by:			N/A	N/A
Engineering	14 Jan 98	14 Jan 98		
Regulatory Affairs	12 Jan 98	12 Jan 98		
Quality Assurance	14 Jan 98	14 Jan 98		
10. Release the test specimen.	DG 11 JAN 98	DG 11 JAN 98		
11. Measure the surface temperature of the test specimen.	11 JAN 98	11 JAN 98		
Record the surface temperature:	-45.4°C	-26.2°C		
Note the instrument used:	ENG-12 ENG-13	ENG-12 ENG-13	ENG-12 ENG-13	ENG-12 ENG-13
12. Measure and record the test specimen's weight.	11 JAN 98	11 JAN 98		
Record the specimen's weight:	55.25 lbs	55.4 lbs		
Note the instrument used:	35014	35014	35014	35014
13. Pause the video recorder. Ensure that the point of impact and orientation specified in the plan have been achieved and recorded.	DG 11 JAN 98	DG 11 JAN 98		
14. Record damage to test specimen on a separate sheet and attach.	DG 11 JAN 98	DG 11 JAN 98		
Steps 10 through 14 witnessed by:				
Engineering	14 Jan 98	14 Jan 98		
Regulatory Affairs	12 Jan 98	12 Jan 98		
Quality Assurance	14 Jan 98	14 Jan 98		

Checklist 1: 30-foot Free Drop (Continued)

Test Location: GROVELAND, MA. **Attempt Number:** *

Step	Specimen S3 ~~A*1~~ DO 11 JAN 98	Specimen S3 ~~B*2~~ DO 11 JAN 98	Specimen C	Specimen D
15. Engineering, Regulatory Affairs and Quality Assurance make a preliminary assessment relative to 10 CFR 71. Record the assessment on a separate sheet and attach. Determine what changes are necessary in package orientation for the puncture test to achieve maximum damage.	DO 11 JAN 98	DO 11 JAN 98	N/A	N/A

Test Data Accepted by (Signature):	Date:
Engineering	14 Jan 98
Regulatory Affairs	22 Jan 98
Quality Assurance	17 Feb 98

TP 74 - 53 11 Jan 98

30 foot drop 1st attempt

Impact was on rear plate bottom, with a following slap down effect towards the front plate along the bottom of the device, but did not produce the bowing of rear plate seen with previous specimen A and S1 of TP 74. Usually the specimen S3 has minor deformation at bottom edge, bottom of shell bent upwards into rear plate

Will attempt another 30 foot drop to try and recreate damage seen from specimen A, as CoG was not directly over planned impact point,

~~30 foot drop 2nd Attempt~~

~~Impact was on the rear plate bottom, with a secondary impact on the lock cover, following by a foll rotation and a third impact on the rear plate bottom.~~ The rear end plate bowed and the bottom of the plate and shell deformed further.

The temperature after this 2nd attempt was -26.2°C (above the -40°C requirement). However, the team did not see this as detrimental to the test because brittle fracture of the screws,

TP 74 11 Jan 98
S3

Assessment:

Orientation For Puncture Test -

Team assessed condition of specimen to determine worst case orientation for puncture - An alternate orientation was suggested on the front plate bottom. The intent of this drop would be to try and drive tube out of boss of rear plate, ie disengaging tube to rear plate connection.
The team evaluated and ~~cont~~ concluded determined that the bottom edge drop orientation (ie continue on with original orientation) would be worse to continue on with already incurred damage.

The worst case for thermal would be to disengage connection of rear plate to shield, continuing an damage to the tube, based on radiographs from earlier test specimens ie A, S, - tube was damaged from 30 foot and puncture.

As puncture is only a one meter drop, any minor damage to the front would not result in worst case for thermal. The drop on

11 JAN 98 (DW)

SPECIMEN "53" PUNCTURE TEST

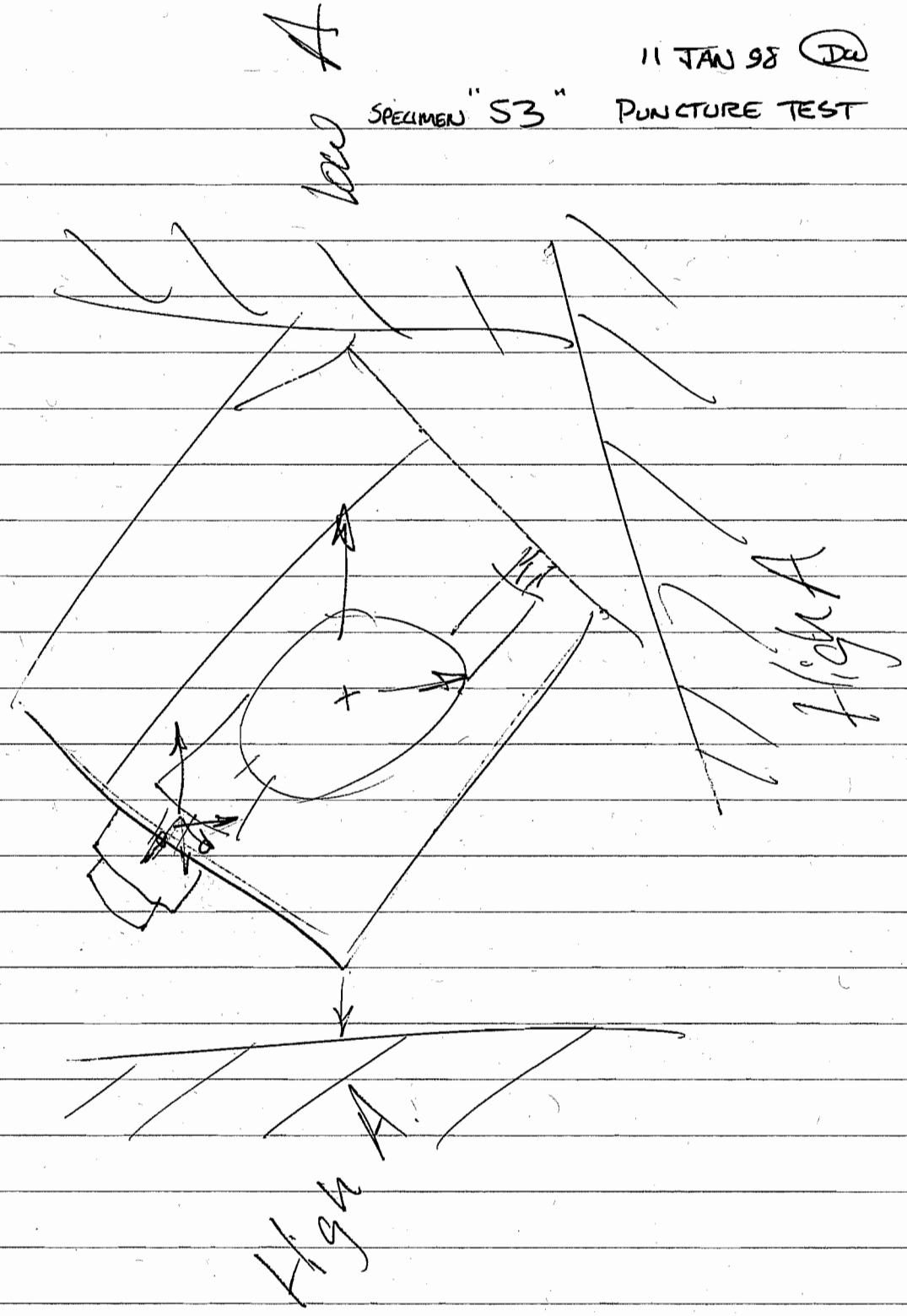

Equipment List 2: Puncture Test

S3 Serial#B3586

Description	Enter the Model and Serial Number	Attach Inspection Report or Calibration Certificate
Drop Surface, Drawing AT10122, Rev. B	01	SEE ATTACH
Puncture Billet, Drawing CT10119, Rev. C	01	SEE ATTACH
Weight Scale	#35014 / OHAUS	SEE ATTACH
Thermometer	ENG-12 / OMEGA	SEE ATTACH
Thermocouple flexible probe	ENG-11 / OMEGA	SEE ATTACH
Thermocouple surface probe	ENG-13 / OMEGA	SEE ATTACH
Record any additional tools used to facilitate the test and attach the appropriate inspection report or calibration certificate.		
THERMOCOUPLE STRAIGHT PROBE	ENG-14 / OMEGA	SEE ATTACH

Verified by:	Signature	Date
Engineering	[illegible]	14 Jan 98
Regulatory Affairs	[illegible]	12 Jan 98
Quality Assurance	C. Roughan	14 Jan 98

Checklist 2: Puncture Test

Test Location: VALLEY TREE GROVELAND MA

Attempt Number: 1

Serial #B3586

Step	Specimen A (DG 11 JAN 98) S3	Specimen B	Specimen C	Specimen D
1. Immerse the test specimen in dry ice as need to bring the specimen's temperature below -40° C.	(DG) 11 JAN 98	N/A	N/A	N/A
Step 1 witnessed by:				
Engineering	[signature] 14 Jan 98			
Regulatory Affairs	[signature] 20 Jan 98			
Quality Assurance	[signature] 14 Jan 98			
2. Measure the weight of the specimen.	(DG) 11 JAN 98			
Record the specimen's weight:	55.40 lbs			
Note instrument used:	#35014	#35014	#35014	#35014
3. Measure the ambient temperature.	42.6° F			
Record ambient temperature:	(DG) 11 JAN 98			
Note the instrument used:	ENG-12 / ENG-14	ENG-12 / ENG-14	ENG-12 / ENG-14	ENG-12 / ENG-14
4. Attach the test specimen to the release mechanism.	(DG) 11 JAN 98			
5. Begin video recording of test so that the impact is recorded.	(DG) 11 JAN 98			
6. Measure the surface temperature of the specimen. Ensure that the specimen is below -40° C.	(DG) 11 JAN 98			
Record the specimen surface temperature:	-66.7°C			
Note the instrument used:	ENG-12 / ENG-13	ENG-12 / ENG-13	ENG-12 / ENG-14	ENG-12 / ENG-14
7. Lift and orient the test specimen as shown in the referenced figure for the specimen.	Figure 8 on Page 18	Figure 9 on Page 19	Figure 8 on Page 18	Figure 9 on Page 19
8. Inspect the orientation setup and verify drop height.	(DG) 11 JAN 98			

Checklist 2: Puncture Test (Continued)

Test Location: VALLEY TREE GROVELAND MA **Attempt Number:** 1

Step	Specimen A S3	Specimen B	Specimen C	Specimen D
9. Photograph the setup in at least two perpendicular planes.	DW 11 JAN 98	N/A	N/A	N/A
Steps 2 through 9 witnessed by:				
Engineering	14 Jan 98			
Regulatory Affairs	12 Jan 98			
Quality Assurance	14 Jan 98			
10. Release the test specimen.	DW 11 JAN 98			
11. Measure the surface temperature of the test specimen.	DW 11 JAN 98			
Record the surface temperature:	-58.2°C			
Note the instrument used:	ENG-12 / ENG-13	ENG-12 / ENG-13	ENG-12 / ENG-13	ENG-12 / ENG-13
12. Measure and record the test specimen's weight.	DW 11 JAN 98			
Record the specimen's weight:	55.3 lbs			
Note the instrument used:	#35014	#35014	#35014	#35014
13. Pause the video recorder. Ensure that the point of impact and orientation specified in the plan have been achieved and recorded.	DW 11 JAN 98			
14. Record damage to test specimen on a separate sheet and attach.	DW 11 JAN 98			
Steps 10 through 14 witnessed by:				
Engineering	14 Jan 98			
Regulatory Affairs	12 Jan 98			
Quality Assurance	14 Jan 98			

Checklist 2: Puncture Test (Continued)

Test Location: VALLEY TREE GROVELAND MA **Attempt Number:** 1

Step	Specimen A 53 (Rev 11 JAN 98)	Specimen B	Specimen C	Specimen D
15. Engineering, Regulatory Affairs and Quality Assurance make a preliminary assessment relative to 10 CFR 71. Record the assessment on a separate sheet and attach. Determine the package orientation for the thermal test that will achieve maximum damage.	14 Jan 98	N/A	N/A	N/A

Test Data Accepted by (Signature):		Date:
Engineering		14 Jan 98
Regulatory Affairs		22 Jan 98
Quality Assurance	C. Longhan	17 Feb 98

Puncture Test Assessment - Specimen S3 Serial# B3586

Impacted in accordance with Test Plan 74. Little damage noted.

Orientation for thermal test should be normal upright position. This will allow the shield to move downward due to the force of gravity.

14 Jan 98

14 Jan 98

22 Jan 98

Serial #B3586

SPECIMEN S3 Dave Pierce
"A" ORIENTATION 11 JAN 98

PENETRATION TEST

SIX ATTEMPTS BEFORE TARGET HIT LIGHT DENT ABOVE TARGET AND ON TARGET, NO DAMAGE TO SCREW

FOUR FOOT FREE DROP

DROP ON TARGET 1ST DROP PAINT CHIPPED ON BOTTOM OF REAR PLATE, NO ADDITIONAL DAMAGE VISIBLE.

30' FREE DROP

1ST DROP HIT ON BOTTOM OF REAR PLATE EVENLY ON EACH SIDE
CENTER OF GRAVITY SLIGHTLY TO BOTTOM OF DEVICE,
BOTTOM OF REAR PLATE & SHELL DENTED IN, NO GAP BETWEEN SHELL & REAR PLATE

2ND DROP 30' HIT ON BOTTOM OF REAR PLATE ON TARGET
BOTTOM OF REARPLATE & SHELL DENTED,
SHELL CONVEXED ON BOTTOM,
FRONT NUT DOESN'T TURN,

12 JAN 89
PEL PUNCTURE TEST

NO ADDITIONAL DAMAGE VISIBAL.

SENTINEL

660/660B DEVICE PROFILING FORM

TP74 +
TP73 "53"

Serial# B3586
KMA 21 Jan 98

Device Model No.: 1060B Device Serial No.: After Thermal

TT0163
Model ~~424-9~~ Source Serial Number: X0017 Activity: 105.0 Ci

Surface Survey Instrument: AN/PDR-27T Serial No: SM-392401 Cal Due: 18 Mar 98

One Meter Survey Instrument: AN/PDR-27T Serial No: SM-392401 Cal Due: 18 Mar 98

Capacity Corr. Factor
1.33

	SURFACE READINGS mR/hr	
	~~Allowed~~	Actual
TOP		70 mR/hr
RIGHT		80 mR/hr
FRONT		940 mR/hr Δ
LEFT		110 mR/hr
REAR		1400 mR/hr Δ
BOTTOM		130 mR/hr

	ONE METER READINGS mR/hr	
	Extrapolated ~~Allowed~~	Actual
TOP	1.9	1.4 mR/hr
RIGHT	1.5	1.1 mR/hr
FRONT	5.6	4.2 mR/hr
LEFT	1.3	1.0 mR/hr
REAR	9.3	7.0 mR/hr
BOTTOM	1.6	1.2 mR/hr

INSPECTOR: L. Pedrolab DATE: 19 Jan 98 NCR No.: NA

Comments:

* Surface readings taken for exposure control and general information purposes only.

Δ Measurements taken with Model # ND 3000, S/N 9837 (Next cal date 23 Sept 98) 19 Jan 98

Amersham QSA

WI-Q05

19 Jan 98

Smirl # 83586

S3 Source position measurement

0.362 unthreaded strip plug length
6.802 teleflex wire off tool.

Removed section from shield = 4 3/8"
(Source dummy wire from "S3" specimen)

LB 19 Jan 98

Serial #B3586 and #B3589

Equipment List 3: Thermal Test

S_3 and C

Description	Enter the Model and Serial Number	Attach Inspection Report or Calibration Certificate
Air Flowmeter	HEDLAND / 3367 / WINTERS ENG-08	SEE ATTACH
Thermocouple (internal)	OMEGA / ENG-18 A	SEE ATTACH
Thermocouple (external)	OMEGA / ENG-17 A	SEE ATTACH
Thermocouple (oven)	OMEGA / ENG-16 A	SEE ATTACH
Temperature recorder	OMEGA / ENG-16, 17, 18	SEE ATTACH
Record any additional tools used to facilitate the test and attach the appropriate inspection report or calibration certificate.		
THERMOMETER	OMEGA / ENG-12	SEE ATTACH
THERMOCOUPLE STRAIGHT PROBE	OMEGA / ENG-14	SEE ATTACH
SOURCE LOCATION TOOL / DIGITAL CALIPER	T10142 / # 272	SEE ATTACH
Verified by:	Signature	Date
Engineering	[signature]	13 Jan 98
Regulatory Affairs	C. Roughen	14 Jan 98
Quality Assurance	B Naffy	13 Jan 98

SOURCE LOCATION BEFORE THERMAL TEST "S3" 5.922 / "C" 5.824

Checklist 3: Thermal Test

Test Location: MFG SCIENCES OAK RIDGE TN Serial #B3586 **Attempt Number:** 1 Serial #B3589

Step	Specimen A	Specimen S3 ~~B~~ DCW 13 JAN 98	Specimen C	Specimen D
1. Pre-heat the oven to a temperature above 800° C.	N/A	DCW 13 JAN 98	DCW 13 JAN 98	N/A
2. Attach the thermocouples the specimen's internal and external measuring points.		DCW 13 JAN 98	DCW 13 JAN 98	
3. Place the package in the oven and close the oven door.		DCW 13 JAN 98	DCW 13 JAN 98	
Record the date and time that the package is placed in oven.		13 JAN 98 424 pm	13 JAN 98 2:51PM	
4. When the specimen's internal temperature exceeds 800° C, start the air flow into the oven. Record the time.		453 pm 13 JAN 98	347PM DCW 13 JAN 98	
Steps 1 through 4 witnessed by:				
Engineering		13 Jan 98	13 Jan 98	
Regulatory Affairs		C. Rongman 13 Jan 98	C. Rongman 13 Jan 98	
Quality Assurance		KNA 13 Jan 98	KNA 13 Jan 98	
5. Measure the oven temperature, the specimen's internal and external temperatures and the air flow rate.		DCW 13 JAN 98	DCW 13 JAN 98	
Record the oven temperature:		891.4°c	896.7°c	
Note instrument used:	ENG-16 / ENG-16A	ENG-16 / ENG-16A	ENG-16 / ENG-16A	ENG-16 / ENG-16A
Record the specimen's internal temperature:		803.5°c	800.9°c	
Note instrument used:	ENG-18 / ENG-18A	ENG-18 / ENG-18A	ENG-18 / ENG-18A	ENG-18 / ENG-18A
Record the specimen's external temperature:		838.3°c	834.9°c	
Note instrument used:	ENG-17 / ENG-17A	ENG-17 / ENG-17A	ENG-17 / ENG-17A	ENG-17 / ENG-17A
Record airflow rate:		11 CFM	11 CFM	
Note instrument used:	3367 / ENG-08	3367 / ENG-08	3367 / ENG-08	3367 / ENG-08
6. Monitor the internal and external temperatures of the specimen and the oven temperature throughout the 30-minute period to ensure that they are above 800° C.		DCW 13 JAN 98	DCW 13 JAN 98	

Checklist 3: Thermal Test (Continued)

Test Location: MFG SCIENCES OAK RIDGE TN **Attempt Number:** 1

Step	Specimen A	Specimen B	Specimen C	Specimen D
		DCW 13 JAN 98 ~~B~~ S3		
7. Monitor the airflow throughout the 30-minute period to ensure a rate of at least 9.6 ft^3/min.	N/A	DCW 13 JAN 98	DCW 13 JAN 97	N/A
8. At the end of the 30-minute period, repeat step 5 using the same measurement devices.		DCW 13 JAN 98	DCW 13 JAN 97	
Record the oven temperature:		904.7°c	902.8°c	
Record the specimen's internal temperature:		844.1°	853.5°c	
Record the specimen's external temperature:		836.2°c	850.9°c	
Record intake air flow velocity:		11 CFM	11 CFM	
Steps 5 through 8 witnessed by:				
Engineering		13 Jan 98	13 Jan 98	
Regulatory Affairs		C. Roy 13 Jan 98	C. Roy 13 Jan 98	
Quality Assurance		KMA 13 Jan 98	KMA 13 Jan 98	
9. Remove test specimen from the oven.		DCW 13 JAN 98	DCW 13 JAN 98	
Record time the specimen is removed.		5 25 PM	4:17 PM	
Describe combustion when door is opened to remove specimen.		DCW 13 JAN 98 RED HOT	DCW 13 JAN 98 RED HOT	
NOTE: If specimen continues to burn, let it self-extinguish and cool naturally.				
10. Measure the ambient temperature.	N/A	DCW 13 JAN 98	DCW 13 JAN 98	N/A
Record the ambient temperature:		65.7°F	67.2°F	
Note the instrument used:	ENG-12 / ENG-14	ENG-12 / ENG-14	ENG-12 / ENG-14	ENG-12 / ENG-14
11. Photograph the test specimen and any subsequent damage		DCW 13 JAN 98	DCW 13 JAN 98	
12. Record damage to test specimen on a separate sheet and attach.		DCW 15 JAN 98	DCW 15 JAN 98	
Steps 9 through 12 witnessed by:				
Engineering		17 Feb 98	17 Feb 98	
Regulatory Affairs		C. Roy 17 Feb 98	C. Roy 17 Feb 98	
Quality Assurance				

Checklist 3: Thermal Test (Continued)

Test Location: **Attempt Number:**

Step	Specimen A	Specimen B	Specimen C	Specimen D
13. Engineering, Regulatory Affairs and Quality Assurance make a preliminary assessment relative to 10 CFR 71. Record the assessment on a separate sheet and attach.	NA	see attached		NA

Test Data Accepted by (Signature):		Date:
Engineering	S. Gra[illegible]	18 FEB 98
Regulatory Affairs	C. Lo[illegible]	18 Feb 98
Quality Assurance	B. M[illegible]	02 MAR 98

15 Jan 98
at Mfg. Sciences

Specimen Ex-1

max length 10.534 (right side)
gap (rt side) .378
height to gap 3.220 right - to crown
height to gap - 3.105 left - to crown
max length 10.450 (left side)
gap (left side) - .272

observation - oxide is soft on left side

Specimen S3 Serial# B3586

Max length 10.132" (left side)
No gap
Max length 10.138" (Right side)
Boring height 3.438" left
(crown)
Boring (crown) height 3.505" Right

15 Jan 98
at Mfg. Sciences

Specimen C #B3589

gap	.288"	Right
Max length	10.397"	Right
height [Crown]	2.705"	Right
Max length	9.936"	left
NO gap	———	left
height (Crown)	3.234"	left

~~Shipping plug~~ (KMA) 15 Jan 98

Specimen "C" #B3589

Source location (Partial measurement) 2.580"
due to obstruction in the "S-tube".

Specimen S3 #B3586

Front plate - loose

Source location 6.610" - .150 = 6.460"

Shipping plug gap = .150"

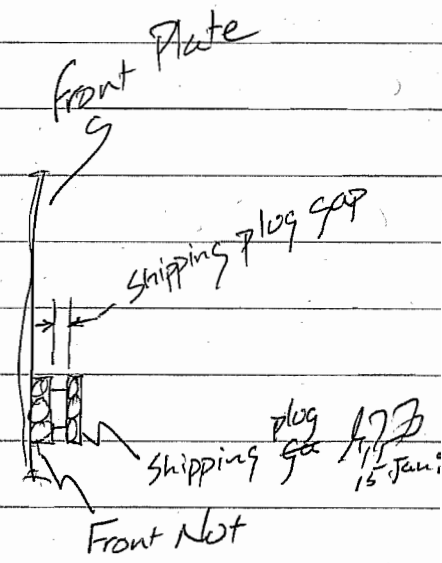

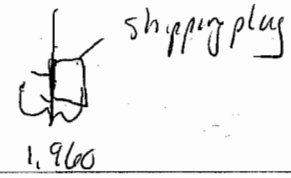

Ex-1

wire inserted through front nut
went in 1.960 (~~front~~ from outside of front
nut (shipping plug)

Specimen C #B3589

Distance from face of front nut to dummy source = 7.822"
(measured with piece of wire)

(Da) 12 JAN 98

	SOURCE	LOCATION	
	C	S3	~~EX1~~ (Da 14 JAN 98) EX1
L AMERSHAM 12 JAN 98	5.829	5.897	5.620
A Mfg. Sam 13 JAN 98	5.824	~~5.921~~ 5.922 (Da 13 JAN 98)	5.650

14 Jan 98

Unit Temp

8:45	"C"	17.3°C	
8:47	"S3"	*1 inch sampling 17.4°C	
8:49	"EX-1"	* 1/4 inch sampling 60.6°C	

Note: Surface Thermocouple was used to measure the internal surface temp.

~~*Surface temp~~ (KNA) 14 Jan 98

(KNA) 14 Jan 98

OMR 18 FEB 98

(SD) 18 FEB 98.
(TCNA) 02 MAR 98

17 Feb 98

Assessment - Part 71

S3 / Specimen C after Thermal Test

Serial #B3586 Serial #B3589

As specimen C has not gone through all the testing, ie no puncture test, the thermal was performed for informational purposes only and is not a valid test specimen. Therefore no assessment to 10 CFR 71 is required.

Specimen S3 underwent the full range of testing and successfully passed the radiation profile, indicating this specific unit passes all the Type B tests.

However the specimen S3 was tested to try and exactly mimic the damage seen in Specimen A of TP 73/74 in order to validate / assess the liklihood of transport damage to Specimen A.
S3 damage from all testing was not an exact replica of damage seen from A, and therefore cannot conclusively determine that specimen A from TP 73/TP 74 would have passed the tests if it had not been subjected to transport damage.

Conclusion is that S3 passes the Type B testing, but cannot conclude that Specimen A would have passed all the Type B test.

Equipment List 3: Thermal Test

EX-1 R&D Unit

Description	Enter the Model and Serial Number	Attach Inspection Report or Calibration Certificate
Air Flowmeter	HEDLAND / 3367 / WINTERS ENG-08	SEE ATTACH
Thermocouple (internal)	OMEGA / ENG-18 A	SEE ATTACH
Thermocouple (external)	OMEGA / ENG-17 A	SEE ATTACH
Thermocouple (oven)	OMEGA / ENG-16 A	SEE ATTACH
Temperature recorder	OMEGA / ENG-16, 17, 18	SEE ATTACH
Record any additional tools used to facilitate the test and attach the appropriate inspection report or calibration certificate.		
THERMOMETER	OMEGA / ENG-12	SEE ATTACH
THERMOCOUPLE STRAIGHT PROBE	OMEGA / ENG-14	SEE ATTACH
SOURCE LOCATION TOOL / DIGITAL CALIPER	T10142 / #277	SEE ATTACH
Verified by:	Signature	Date
Engineering	[signature]	13 Jan 98
Regulatory Affairs	C. Rongman	14 Jan 98
Quality Assurance	B Mahy	13 Jan 98

EX1 SOURCE LOCATION BEFORE THERMAL TEST 5.650 DW 14 JAN 98

Checklist 3: Thermal Test

Test Location: MFG SCIENCES OAK RIDGE TN RED Unit **Attempt Number:** 1

Step	Specimen ~~A~~ EX1 13 JAN 98	Specimen B	Specimen C	Specimen D
1. Pre-heat the oven to a temperature above 800° C.	DW 13 JAN 98			
2. Attach the thermocouples the specimen's internal and external measuring points.	DW 13 JAN 98			
3. Place the package in the oven and close the oven door.	DW 13 JAN 98			
Record the date and time that the package is placed in oven.	DW 13JAN 98 5:35 PM			
4. When the specimen's internal temperature exceeds 800° C, start the air flow into the oven. Record the time.	13 JAN 98 608 PM			
Steps 1 through 4 witnessed by:				
Engineering	13 Jan 98			
Regulatory Affairs	14 Jan 98			
Quality Assurance	KMA 13 Jan 98			
5. Measure the oven temperature, the specimen's internal and external temperatures and the air flow rate.	DW 13 JAN 98			
Record the oven temperature:	898.9°C			
Note instrument used:	ENG-16 / ENG-16A	ENG-16 / ENG-16A	ENG-16 / ENG-16A	ENG-16 / ENG-16A
Record the specimen's internal temperature:	803.9			
Note instrument used:	ENG-18 / ENG-18A	ENG-18 / ENG-18A	ENG-18 / ENG-18A	ENG-18 / ENG-18A
Record the specimen's external temperature:	845.2°			
Note instrument used:	ENG-17 / ENG-17A	ENG-17 / ENG-17A	ENG-17 / ENG-17A	ENG-17 / ENG-17A
Record airflow rate:	10 CFM			
Note instrument used:	3367 / ENG-08	3367 / ENG-08	3367 / ENG-08	3367 / ENG-08
6. Monitor the internal and external temperatures of the specimen and the oven temperature throughout the 30-minute period to ensure that they are above 800° C.	DW 13 JAN 98			

Checklist 3: Thermal Test (Continued)

Test Location: MFG SKEWES R&D UNIT **Attempt Number:** J

Step	Specimen A EX1	Specimen B	Specimen C	Specimen D
7. Monitor the airflow throughout the 30-minute period to ensure a rate of at least 9.6 ft^3/min.	DW 13 JAN 98	N/A	N/A	N/A
8. At the end of the 30-minute period, repeat step 5 using the same measurement devices.	DW 13 JAN 98			
Record the oven temperature:	904.0° c			
Record the specimen's internal temperature:	849.9° c			
Record the specimen's external temperature:	856.5° c			
Record intake air flow velocity:	10.5 CFM			
Steps 5 through 8 witnessed by:				
Engineering	13 Feb 98			
Regulatory Affairs	C. Rogers 13 Jan 98			
Quality Assurance	KMA 13 Jan 98			
9. Remove test specimen from the oven.	13 ~~JAN 98~~ 6:38 PM DW			
Record time the specimen is removed.	DW 6:38 pm			
Describe combustion when door is opened to remove specimen.	NO FLAME RED HOT DW 13 JAN 98			
NOTE: If specimen continues to burn, let it self-extinguish and cool naturally.				
10. Measure the ambient temperature.	DW 13 JAN 98			
Record the ambient temperature:	63.1° F			
Note the instrument used:	ENG-12 / ENG-14	ENG-12 / ENG-14	ENG-12 / ENG-14	ENG-12 / ENG-14
11. Photograph the test specimen and any subsequent damage	DW 13 JAN 98			
12. Record damage to test specimen on a separate sheet and attach.	DW 15 JAN 98			
Steps 9 through 12 witnessed by:				
Engineering	13 Feb 98			
witnessed on 15 Jan 98 Regulatory Affairs	CMR 15 Feb 98			
Quality Assurance				

Checklist 3: Thermal Test (Continued)

Test Location: MFG SIERLES OAK RIDGE TN R&D **Attempt Number:** 1

Step	Specimen A EX-1	Specimen B	Specimen C	Specimen D
13. Engineering, Regulatory Affairs and Quality Assurance make a preliminary assessment relative to 10 CFR 71. Record the assessment on a separate sheet and attach.	NA*	N/A	N/A	N/A

Test Data Accepted by (Signature):	Date:
Engineering	
Regulatory Affairs	
Quality Assurance	

* NA - as test unit was experimental and not a valid test specimen in the TP 74
CMR
12/26/98

2.12.8 Test Plan 80 Rev 1 (Mar 1999)

UNITED STATES
NUCLEAR REGULATORY COMMISSION
WASHINGTON, D.C. 20555-0001

March 16, 1999

Mr. William M. McDaniel,
Facility Manager
AEA Technology, QSA Inc.
40 North Avenue
Burlington, MA 01803

Dear Mr. McDaniel:

This is to acknowledge receipt of your plan No. 80, Revision 1, dated March 12, 1999, for testing the Model No. 650L package. This plan was submitted in response to our Confirmatory Action Letter No. 97-7-005, dated June 10, 1997.

We have reviewed your test plan and found it to be acceptable.

If you have any questions regarding this matter, please contact me at (301)-415-8510.

Sincerely,

Cass R. Chappell

Cass R. Chappell, Chief
Package Certification Section
Spent Fuel Project Office
Office of Nuclear Material Safety
and Safeguards

cc: 71-9269

AEA TECHNOLOGY
QSA

TEST PLAN NO. 80, Rev. 1

TEST PLAN COVER SHEET

TEST TITLE: TEST PLAN 80, REVISION 1, MODEL 650L SOURCE CHANGER TYPE B TRANSPORT TESTS

PRODUCT MODEL: 650L

ORIGINATED BY: (MPR)	DATE: 12 MAR 99

TEST PLAN REVIEW

ENGINEERING APPROVAL:	DATE: 12 MAR 99
QUALITY ASSURANCE APPROVAL: Daniel W. Kurtz	DATE: 12 Mar 99
REGULATORY APPROVAL:	DATE: 12 Mar 99

COMMENTS:

TEST RESULTS REVIEW

ENGINEERING APPROVAL:	DATE:
QUALITY ASSURANCE APPROVAL:	DATE:
REGULATORY APPROVAL:	DATE:

SENTINEL

Test Plan 80
Revision 1

Model 650L
Source Changer
Type B Transport Tests

March 1999

Prepared By: Date 12 MAR 99

C. SCHLASEMAN
MPR

Checked By: Date 12 MAR 99

E. CLAUDE
MPR

Approved By: Date 12 MAR 99

N. MARRONE
MPR

Test Plan 80

Revision 1

Model 650L

Source Changer

Type B Transport Tests

March 1999

Prepared By: Date

C. SCHLASEMAN
MPR

Checked By: Date

E. CLAUDE
MPR

Approved By: Date

N. MARRONE
MPR

Contents

Contents i

List of Figures, Tables and Worksheets iii

1.0 Introduction 1

2.0 Transport Package Description 2

3.0 Regulatory Compliance 3

4.0 System Failures and Package Orientations 4

5.0 Assessment of Package Conformance 6

5.1 Regulatory Requirements 6

5.2 Test Package Contents 6

6.0 Construction and Condition of Test Specimens 7

7.0 Material and Equipment List 8

8.0 Test Procedure 9

8.1 Roles and Responsibilities 9

8.2 Specimen Temperature Measurement 10

8.3 Test Specimen Preparation and Inspection 10

8.4 Summary of Test Schedule 11

8.5 Compression Test (10 CFR 71.71(c)(9)) 15

8.5.1 Compression Test Setup 15

8.5.2 Compression Test Assessment 16

8.6 Penetration Test (10 CFR 71.71(c)(10)) 16

8.6.1 Penetration Test Setup 16

8.6.2 Penetration Test Orientation 17

8.6.3 Penetration Test Assessment 18

8.7 1.2 Meter (4 Foot) Free Drop Test (10 CFR 71.71(c)(7)) 18

8.7.1 1.2 Meter (4 Foot) Free Drop Test Setup 18

8.7.2 1.2 Meter (4 Foot) Free Drop Test Orientation, Specimen TP80(A) 19

8.7.3 1.2 Meter (4 Foot) Free Drop Test Orientation, Specimen TP80(B) 20

8.7.4 1.2 Meter (4 Foot) Free Drop Test Orientation, Specimen TP80(C) 21

8.7.5 1.2 Meter (4 Foot) Free Drop Test Assessment 22

8.8 First Intermediate Test Inspection 22

8.9 9 Meter (30 Foot) Free Drop Test (10 CFR 71.73(c)(1)) 22

8.9.1 9 Meter (30 Foot) Free Drop Test Setup 22

8.9.2 9 Meter (30 Foot) Free Drop Test Orientation, Specimen TP80(A) 24

8.9.3 9 Meter (30 Foot) Free Drop Test Orientation, Specimen TP80(B) 24

8.9.4 9 Meter (30 Foot) Free Drop Test Orientation, Specimen TP80(C) 26

8.9.5 9 Meter (30 Foot) Free Drop Test Assessment 27

8.10 Puncture Test (10 CFR 71.73(c)(3)) 27

8.10.1 Puncture Test Setup 27

8.10.2 Puncture Test Orientation, Specimen TP80(A) 28

8.10.3 Puncture Test Orientation, Specimen TP80(B) 29

8.10.4 Puncture Test Orientation, Specimen TP80(C) 30

8.10.5 Puncture Test Assessment 31

8.11 Second Intermediate Test Inspection 31

8.12 Thermal Test (10 CFR 71.73(c)(4)) 31

8.12.1 Thermal Specimen Selection 31

8.12.2 Thermal Test Setup 32

8.12.3 Thermal Test Procedure 32

8.12.4 Thermal Test Assessment 33

8.13 Final Test Inspection 33

9.0 Worksheets 35

Appendix A: Drawing R-TP80, Revision D

List of Figures, Tables and Worksheets

Figure 1: Side View of Model 650L Package....2
Figure 2: Compression Test Setup....18
Figure 3: Penetration Test Orientation....20
Figure 4: 1.2 Meter (4 Foot) Free Drop Orientation, Specimen TP80(A)....23
Figure 5: 1.2 Meter (4 Foot) Free Drop Orientation, Specimen TP80(B)....24
Figure 6: 1.2 Meter (4 Foot) Free Drop Orientation, Specimen TP80(C)....25
Figure 7: 9 Meter (30 Foot) Free Drop Orientation, Specimen TP80(A)....28
Figure 8: 9 Meter (30 Foot) Free Drop Orientation, Specimen TP80(B)....29
Figure 9: 9 Meter (30 Foot) Free Drop Orientation, Specimen TP80(C)....30
Figure 10: Puncture Test Orientation, Specimen TP80(A)....33
Figure 11: Puncture Test Orientation, Specimen TP80(B)....34
Figure 12: Puncture Test Orientation, Specimen TP80(C)....35
Specimen Preparation List....40
Equipment List 1: Compression Test....41
Equipment List 2: Penetration Test....44
Equipment List 3: 1.2 Meter (4 Foot) Free Drop....47
Equipment List 4: 9 Meter (30 Foot) Free Drop....50
Equipment List 5: Puncture Test....53
Equipment List 6: Thermal Test....56
Checklist 1: Compression Test....42
Checklist 2: Penetration Test....45
Checklist 3: 1.2 Meter (4 Foot) Free Drop....48
Checklist 4: 9 Meter (30 Foot) Free Drop....51
Checklist 5: Puncture Test....54
Checklist 6: Thermal Test....57
Data Sheet 1: Compression Test....43
Data Sheet 2: Penetration Test....46
Data Sheet 3: 1.2 Meter (4 Foot) Free Drop....49
Data Sheet 4: 9 Meter (30 Foot) Free Drop....52
Data Sheet 5: Puncture Test....55
Data Sheet 6: Thermal Test....58

AEA Technology/QSA Test Plan 80

1.0 Introduction

This document describes Type B(U) transport package testing of the SENTINEL Model 650L Source Changer, Certificate of Compliance Number 9269. The purpose of the testing is to demonstrate that the package meets the NRC requirements for Type B(U) packages under Normal Conditions of Transport (10 CFR 71.71), Hypothetical Accident Conditions (10 CFR 71.73), and the criteria stated in IAEA, Safety Series 6 (1985, as amended 1990).

The test plan specifies the test package configurations, testing equipment and scenarios, justifies the package orientations, and provides test worksheets to record key steps in the testing sequence.

Refer to Appendix A for a drawing of the test specimen.

2.0 Transport Package Description

The Model 650L source changer shown in Appendix A is 13 ¼" high, 10" long, and 8 ¼" wide in overall dimension, and has a maximum weight of 90 lb. The package consists of the following components:

- Source Capsule and Shield Assembly: The Special Form Source is contained in a capsule and is attached to the source wire assembly. The source is shielded by a Titanium "U" tube that is enclosed in a depleted uranium (DU) shield.

- Outer Casing: The shield assembly is encased in two Carbon Steel shells. The inner shell is rectangular and is 0.135" thick. The outer shell is circular and is 0.048" thick. The shells are positioned between two, Stainless Steel, 0.135" thick top and bottom plates. The plates are secured with four 5/16-18 hex head stainless steel through-bolts. The voids between the depleted uranium shield and the inner and outer shells are filled with a rigid 8 pound Polyurethane foam.

- Protective Lid: During transport, the locking assembly is protected by a 0.135" thick, Carbon Steel lid. The lid is secured to the top plate by four 3/8-16 hex head strain-hardened stainless steel bolts.

- Source Locking Assembly: Model 650L has two Stainless Steel locking assemblies that keep the source inside the Titanium "U" tube. Each locking assembly is secured to the top plate by four ¼-20 Stainless Steel screws.

The 650L package is shown below in Figure 1.

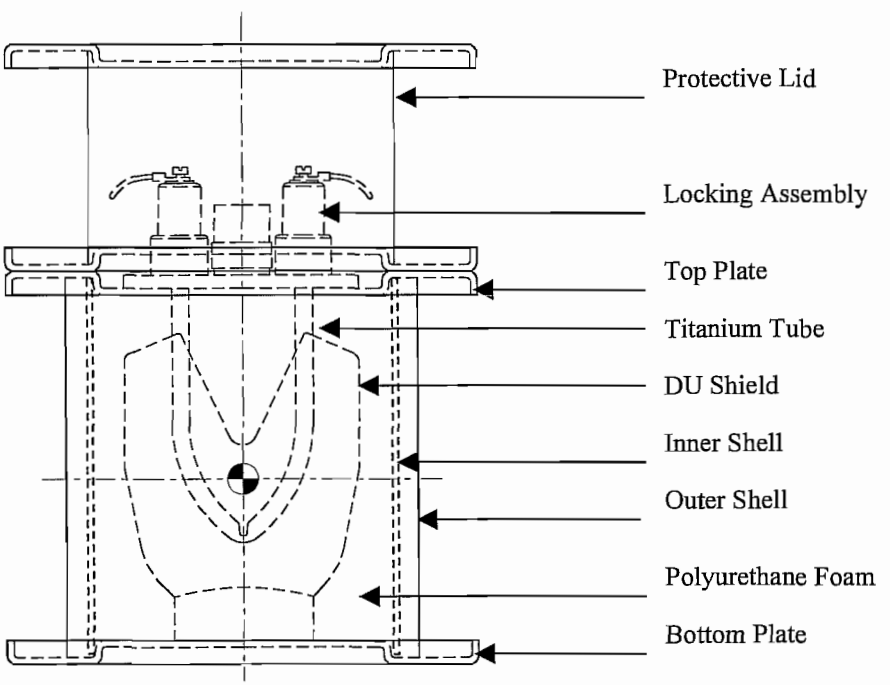

Figure 1. Side View of Model 650L Package

3.0 Regulatory Compliance

The purpose of this plan, which was developed in accordance with AEAT/QSA SOP-E005, is to ensure that the Model 650L Source Changer shown in the descriptive drawing provided in Appendix A meets the Type B(U) transport package requirements of 10 CFR 71 and IAEA Safety Series No. 6 (1985, as amended 1990).

The Normal Conditions of Transport tests (10 CFR 71.71) to be performed are the compression test, penetration test, and 1.2 meter (4 foot) free drop.

Water spray preconditioning of the package is not performed as the Model 650L packages are constructed of waterproof materials throughout. The water spray would not contribute to any degradation in structural integrity.

The Hypothetical Accident Tests (10 CFR 71.73) to be performed are the 9 meter (30 foot) free drop, puncture test, and thermal test.

The crush test (10 CFR 71.73(c)(2)) is not performed because the radioactive contents are special-form radioactive material.

The immersion test and all other conditions specified in 10 CFR 71 will be evaluated separately.

4.0 System Failures and Package Orientations

The location of the source relative to its stored position in the shield is an important safety element. Displacement of the source and/or shield from its original stored position could elevate the dose rate at the surface of the package above regulatory limits. Tests in this plan focus on damaging those components of the package which could cause displacement of the source, relative to its stored position, within the shield and which affect the integrity of the shield itself.

System failures that could affect package integrity and cause radiological dose rates to exceed the regulatory limits include:

- Oxidation of DU Shield during the thermal test could occur if either distortion/local buckling of the inner and outer shells, or failure of the through-bolts during drop testing results in a large, open path to the DU shield.

- Source Pull-Out from Shield could occur if there is significant relative displacement between the shield and the top cover plate penetration and locking assembly.

Three orientations are considered most likely to cause damage during the 1.2 meter and 9 meter drop tests, i.e., the most likely to cause unacceptable external dose rates. For all three orientations, the worst case temperature is the lower limit of -40°C due to embrittlement of the DU and Carbon Steel components.

- Case 1, Horizontal, Long-Side Down: The DU shield could move through the foam during impact, which could result in source pullout from titanium tubes. Also, due to the low testing temperature, brittle failure of the inner and outer shells could occur. The failure(s) may be sufficient to open a significant path to the depleted uranium shield during thermal test and cause burning of the DU shield. The Long-Side Down orientation is selected because the long side of the package has a stiffer configuration than the short side, which will result in a shorter deceleration and a higher impact load.

- Case 2, Vertical, Upside Down: Deformation of the lid weldment, crushing of the foam between the depleted uranium shield and top plate, deformation (bowing upward) of the top plate due to the impact load of the DU shield applied through titanium source tubes and foam, failure of the through-bolts, and failure of the locking assembly could occur. When the package is turned upright for the thermal test, the DU shield and its integral titanium tubes could drop down to their original positions while the source is pulled out of the tubes by the bowed top plate or failed locking assembly. Also, a lead shim (which will melt during thermal testing) under the DU shield could cause additional source pullout.

- Case 3, Vertical, Top Corner Down: Failure of lid or lid closure bolts could expose the locking assembly to damage during the puncture bar test. Failure of the locking assembly could result in source pullout. Additionally, this orientation will load the through-bolts in tension, and could cause them to fail.

The following orientations are planned for the puncture tests. These orientations will be modified, if necessary, based on the results of the engineering assessments conducted after the 9 meter drop tests. The puncture test orientations will be selected to maximize damage to the test specimens.

- Case 1, Horizontal, Long-Side Down: This orientation is the same as for the Case 1, 1.2 meter and 9 meter drop tests.

- Case 2, Underside of Top Plate at Lid Bolt: The top plate could be pried up, and, as a minimum, load the through-bolts in tension. The impact on the lid bolt rivnut could damage the lid bolt connection.

- Case 3, Bottom of Package: Impact on the four Stainless Steel rivnuts could damage the through-bolt connection. If the lid is removed during the Case 3 9 meter drop, the test specimen will be dropped upside down such that the lock assemblies strike the puncture bar.

The limiting orientation for the penetration bar test is discussed in Section 8.6.2.

5.0 Assessment of Package Conformance

The Model 650L Source Changer must meet the Type B(U) transport package requirements of 10 CFR 71. The conformance criteria are detailed in the following two sections.

5.1 Regulatory Requirements

- Normal Conditions of Transport Tests (71.43(f)): There should be no loss or dispersal of radioactive contents, no significant increase in external surface radiation levels and no substantial reduction in the effectiveness of the packaging.

- Hypothetical Accident Conditions (71.51(a)(2)): There should be no escape of radioactive materials greater than A_2 in one week and no external dose rate greater than 1 R/hr at 1 meter from the external surface when the package contains its maximum design radioactive contents.

5.2 Test Package Contents

The Model 650L is designed to carry Special Form Sources. Containment of the radioactive source is tested at manufacture. The source capsules have been certified by the Competent Authority in accordance with the performance requirements for Special Form as specified in 10 CFR Part 71 and 49 CFR.

The test plan therefore does not discuss/specify tests of the containment of the radioactive source. The purpose of the tests is to demonstrate that the shielding remains effective within the limits specified by the regulations, and that the source capsule remains contained within the source changer.

A simulated source will be used during testing of the package. The radiation levels after the test will be monitored by replacing the simulated source with an active source.

6.0 Construction and Condition of Test Specimens

The Test Plan 80 (TP 80) test specimens will be Model 650L units constructed in accordance with AEAT/QSA Drawing R-TP80, Revision D.

Drawing TP650L specifies the Model 650L package in its worst case transport conditions, which vary depending on the Test Case. Lead shielding placement should be as described below:

Test Case	Lead Shielding Placement	Rationale
1—Horizontal, Long-Side Down Specimen TP80(A)	No lead between DU shield and long side of inner shell.	Lead between DU and shell or through-bolts might stop DU from travelling through foam during drop impact.
2—Vertical, Upside Down Specimen TP80(B)	Thickest lead under DU shield, use heavy package.	Lead under DU may melt during thermal test and could allow DU to settle, which could allow source pullout. Impact force will be larger for heavier packages, which would result in larger top plate deflection.
3—Top Corner Down Specimen TP80(C)	Any location, use heavy package.	Lead placement will not affect lid failure, and impact force will be larger for heavier packages.

For all Drop Test Cases the temperature of the specimen must be below -40°C at the time of each test, a minimum temperature required by IAEA, Safety Series 6 (1985, as amended 1990). The low temperature represents the worst-case condition for the package because of the potential for brittle fracture of the shield and Carbon Steel lid.

7.0 Material and Equipment List

The equipment checklists, test worksheets, and data sheets in Section 9.0 list the key materials and equipment specified in 10 CFR 71 and the necessary measurement instruments.

When video recording is specified, select video cameras with the highest shutter speed practical to record testing.

Additional materials and equipment may be used to facilitate the tests.

8.0 Test Procedure

Three specimens are to be tested to determine the transport integrity of the package. The testing sequence is shown below:

1. Test specimen preparation and inspection
2. Compression test (10 CFR 71.71(c)(9))
3. Penetration test (10 CFR 71.71(c)(10))
4. 1.2 Meter (4 foot) free drop test (10 CFR 71.71(c)(7))
5. First intermediate test inspection
6. 9 Meter (30 foot) free drop test (10 CFR 71.73(c)(1))
7. Puncture test (10 CFR 71.73(c)(3))
8. Second intermediate test inspection
9. Thermal test (10 CFR 71.73(c)(4)) (If applicable, see Section 8.12.1)
10. Final test inspection

Each specimen must be put through the entire test sequence, unless the thermal test is considered unnecessary based on the test specimen condition after the puncture test and the assessment by Engineering, Quality Assurance and Regulatory Affairs. If test conditions such as the orientation at impact are not met during the test of a particular specimen, it may be replaced with a specimen of equivalent construction. The replacement must go through the entire test sequence.

8.1 Roles and Responsibilities

The responsibilities of the groups identified in this plan are:

- **Engineering** executes the tests according to the test plan and summarizes the test results. **Engineering** also provides technical input to assist Regulatory Affairs and Quality Assurance as needed.
- **Regulatory Affairs** monitors the tests and reviews test reports for compliance with regulatory requirements.
- **Quality Assurance** oversees test execution and test report generation to ensure compliance with AEAT/QSA Quality Assurance Program.
- **Engineering, Regulatory Affairs**, and **Quality Assurance** are jointly responsible for assessing test and specimen conditions relative to 10 CFR 71.
- **Quality Control**, a function that reports directly to Quality Assurance, is responsible for measuring and recording test and specimen data throughout the test cycle.

8.2 Specimen Temperature Measurement

The penetration, drop, and puncture tests are to be carried out while the package is at or below -40°C. Temperature measurements will be made by positioning thermocouples on the package surface and the shield (inside the source tube).

8.3 Test Specimen Preparation and Inspection

Refer to the *Specimen Preparation List* in Section 9.0 to ensure that test sequence is followed. Sign and date the list when completed.

To prepare the test units:

1. Inspect the test units to ensure that they comply with the requirements of Drawing R-TP80, Revision D.

2. Weigh the test package, including the lid.

3. Perform and record the radiation profile in accordance with AEAT/QSA Work Instruction WI-Q09.

4. **Quality Control, Engineering, Regulatory Affairs**, and **Quality Assurance** will jointly verify that the test specimens comply with Drawing R-TP80, Revision D, and the AEAT/QSA Quality Assurance Program.

5. Measure and record the location of the simulated source.

6. Place thermocouples on package surface and inside one of the source tubes.

7. Prepare the package for transport.

8. Clearly and indelibly mark the units with identification.

8.4 Summary of Test Schedule

Test	Paragraph	Specimen	Diagram
Compression	71.71(c)(9)	ALL	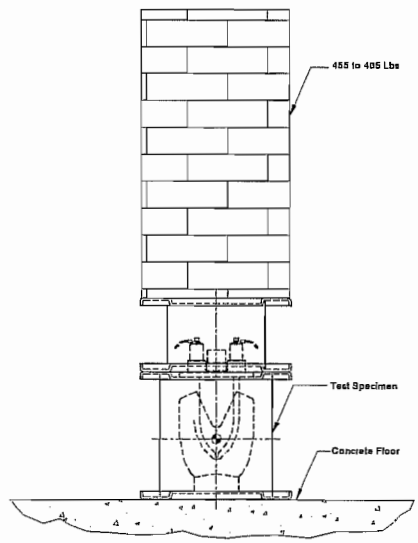
Penetration	71.71(c)(10)	ALL	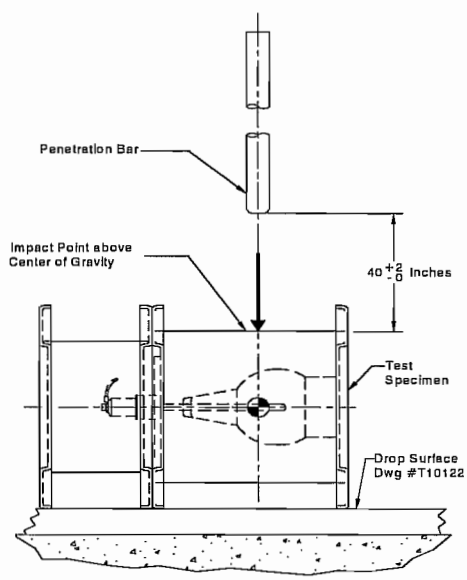

Test	Paragraph	Specimen	Diagram
1.2 Meter (4 Foot) Free Drop, Case 1, Horizontal, Long Side Down	71.71(c)(7)	TP80(A)	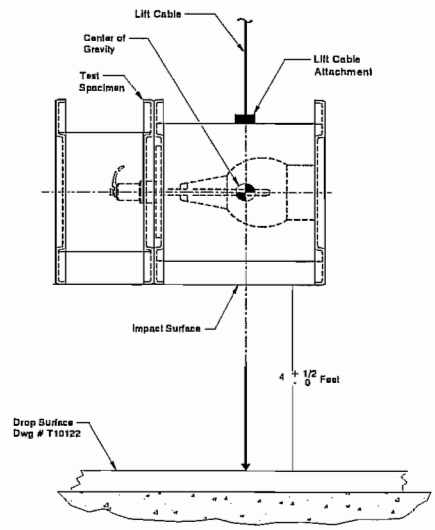
1.2 Meter (4 Foot) Free Drop, Case 2, Vertical, Upside Down	71.71(c)(7)	TP80(B)	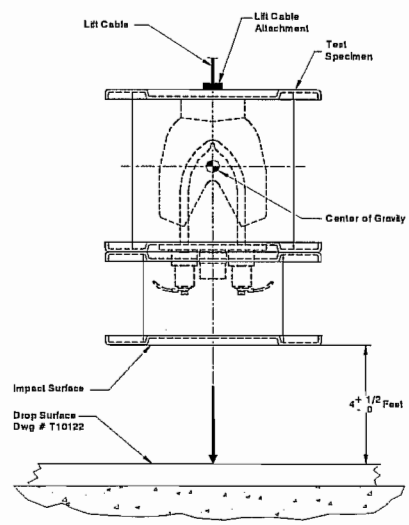
1.2 Meter (4 Foot) Free Drop, Case 3, Top Corner Down	71.71(c)(7)	TP80(C)	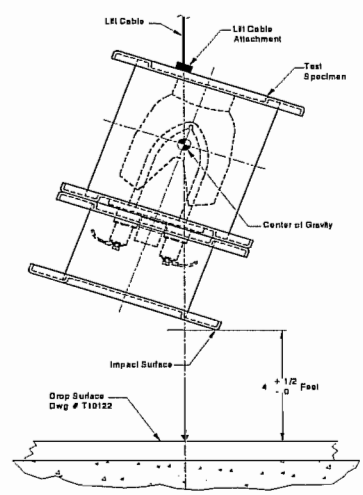

Test	Paragraph	Specimen	Diagram
9 Meter (30 Foot) Free Drop, Case 1, Horizontal, Long Side Down	71.73(c)(1)	TP80(A)	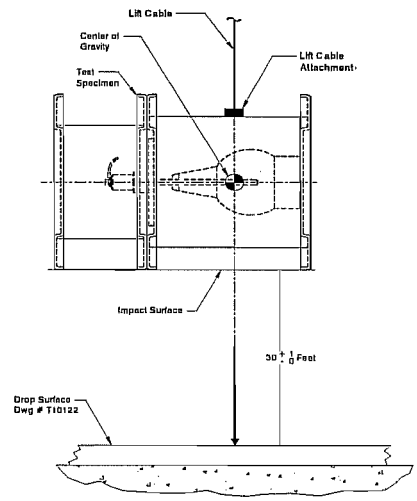
9 Meter (30 Foot) Free Drop, Case 2, Vertical, Upside Down	71.73(c)(1)	TP80(B)	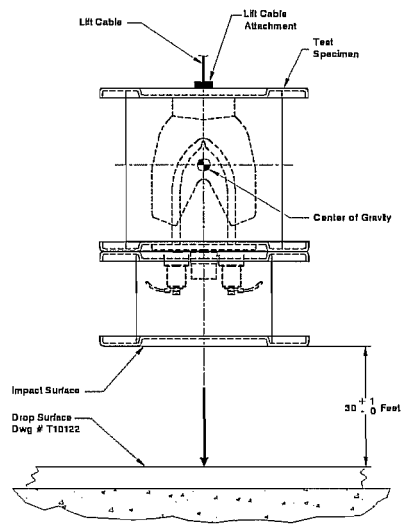
9 Meter (30 Foot) Free Drop, Case 3, Top Corner Down	71.73(c)(1)	TP80(C)	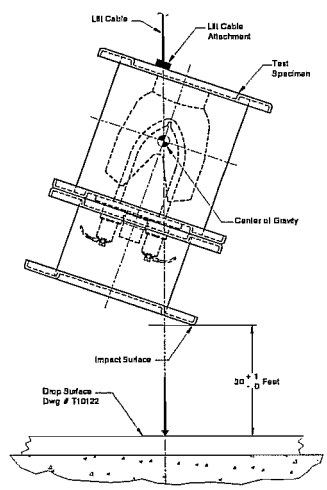

Test	Paragraph	Specimen	Diagram
Puncture, Case 1, Horizontal, Long Side Down	71.73(c)(3)	TP80(A)	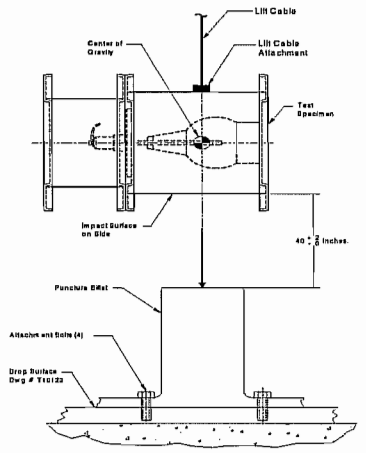
Puncture, Case 2, Underneath Corner of Top Plate	71.73(c)(3)	TP80(B)	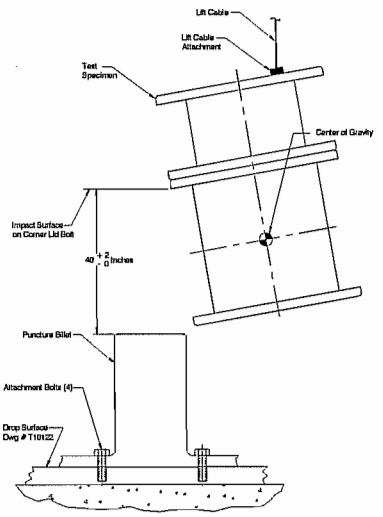
Puncture, Case 3, Vertical Upright	71.73(c)(3)	TP80(C)	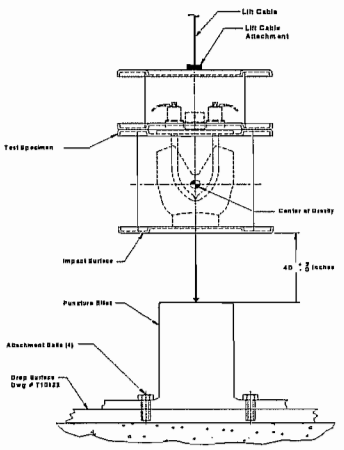
Thermal	71.73(c)(4)	ALL	Requirement for thermal test to be determined for each unit following completion of drop and puncture tests.

8.5 Compression Test (10 CFR 71.71(c)(9))

The first test is the compression test, per 10 CFR 71.71(c)(9), in which the package is placed under a load of 455 pounds which is greater than five times the maximum package weight and greater than 2 lbf/in^2 multiplied by the vertically projected area:

5 x 90 lbf = 450 lbf

8 ¼" wide x 10" long x 2 lbf/in^2 = 165 lbf

Refer to *Equipment List 1* for information about required tools. Use *Checklist 1* to ensure that the test sequence is followed. Use *Data Sheet 1* to record testing results. Sign and date all action items and record required data on the appropriate worksheets.

8.5.1 Compression Test Setup

To prepare a specimen for the compression test:

1. Review the setup shown in Figure 2.
2. Place the specimen on a concrete surface oriented in its normal, upright transport position.
3. Gradually place 455 to 465 pounds uniformly distributed onto the specimen as shown in Figure 2.
4. Test specimen in accordance with *Checklist 1*.

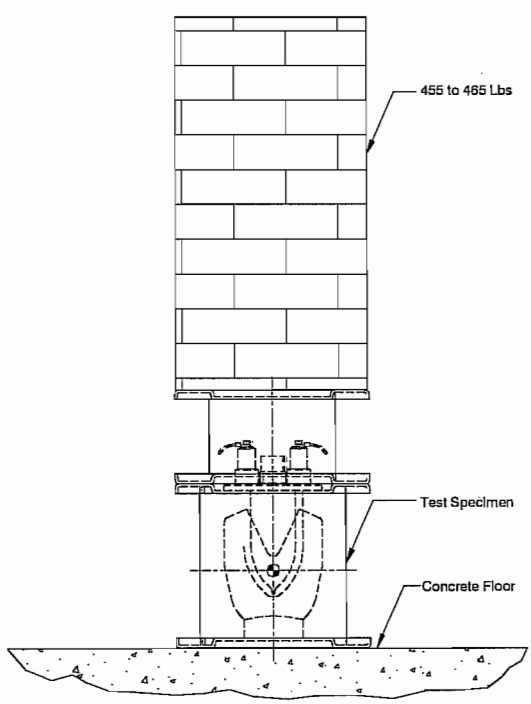

Figure 2. Compression Test Setup

8.5.2 Compression Test Assessment

Upon completion of the test, **Engineering, Regulatory Affairs**, and **Quality Assurance** team members will jointly take the following actions:

1. Review the test execution to ensure that the test was performed in accordance with 10 CFR 71.

2. Make a preliminary evaluation of the specimen relative to the requirements of 10 CFR 71.

3. Assess the damage to the specimen to decide whether testing of that specimen is to continue.

4. Evaluate the condition of the specimen to determine if changes are necessary in the package orientation for the penetration test to achieve maximum damage.

8.6 Penetration Test (10 CFR 71.71(c)(10))

The compression test is followed by the penetration test, per 10 CFR 71.71(c)(10), in which a penetration bar is dropped from a height of at least 40 inches to impact a specified point on the package. The bar is dropped through free air.

Refer to *Equipment List 2* for information about required tools. Use *Checklist 2* to ensure that the test sequence is followed. Use *Data Sheet 2* to record testing results. Sign and date all action items and record required data on the appropriate worksheets.

8.6.1 Penetration Test Setup

This test requires that the test specimen be at -40°C or below at the time of the penetration bar release. The worksheet calls for measuring and recording the specimen temperature before and after the test.

To set up a package for the penetration test:

1. Place the specimen on the drop surface (Drawing AT10122, Revision B) and position it according to the orientation described in the next section. Use shims to position the package, if necessary.

2. Position the penetration bar shown in Drawing BT10129, Revision B, directly above the specified point of impact, and raise the bar 40 to 42 inches above the target.

3. Measure the specimen's internal and surface temperature to ensure that the package is at the required temperature.

4. Test specimen in accordance with *Checklist 2*.

8.6.2 Penetration Test Orientation

The 650L package is placed horizontally, long side down on the drop surface specified in Drawing AT10122, Revision B. The orientation of the package is shown in Figure 3. The desired impact point is on the long side of the outer shell, directly above the center of gravity of the package, to try to penetrate the shells.

Other orientations for this specimen were considered including the normal transport position. In the normal transport orientation, the lock assembly is protected by the 0.135" thick steel outer lid. The penetration bar dropped from four feet would cause only minor damage to the outer lid.

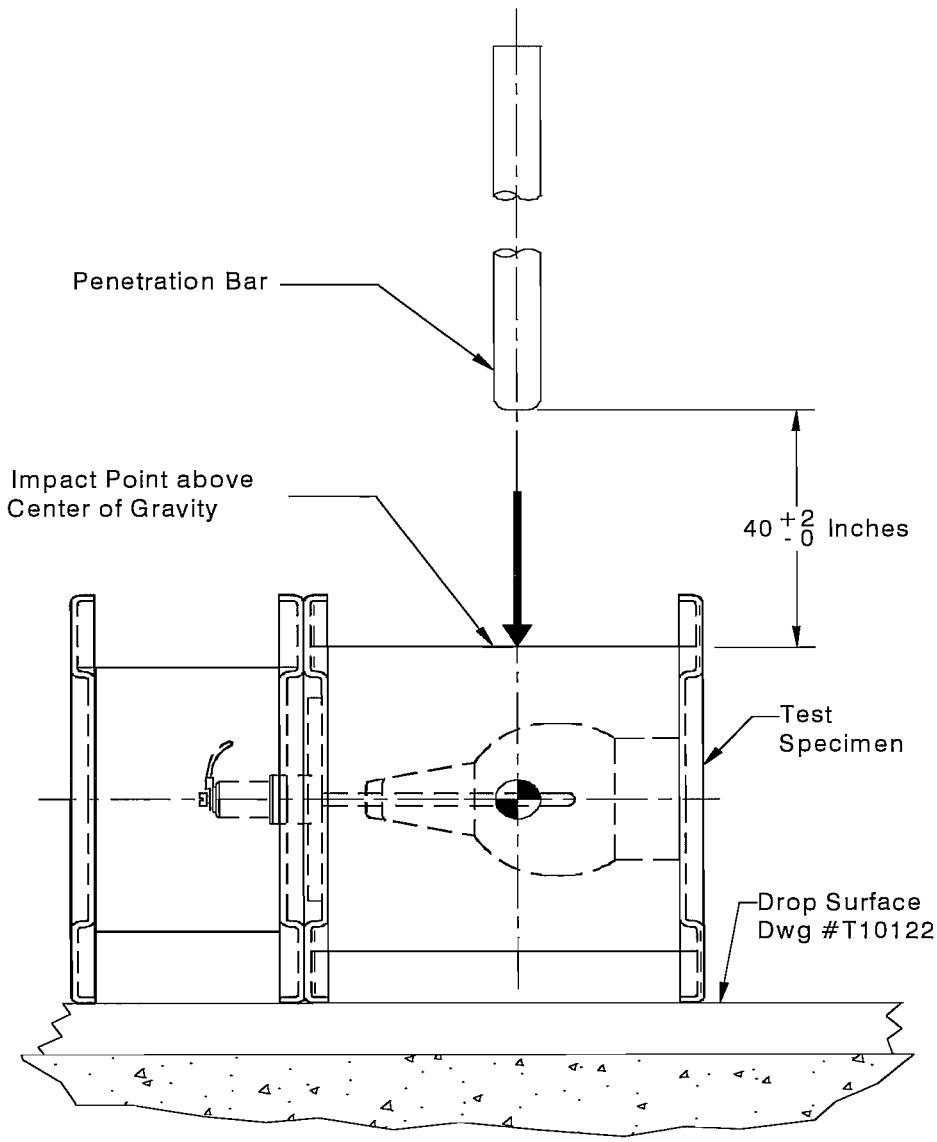

Figure 3. Penetration Test Orientation

8.6.3 Penetration Test Assessment

Upon completion of the test, **Engineering, Regulatory Affairs,** and **Quality Assurance** team members will jointly take the following actions:

1. Review the test execution to ensure that the test was performed in accordance with 10 CFR 71.

2. Make a preliminary evaluation of the specimen relative to the requirements of 10 CFR 71.

3. Assess the damage to the specimen to decide whether testing of that specimen is to continue.

4. Evaluate the condition of the specimen to determine if changes are necessary in the package orientation for the 1.2 meter (4 foot) free drop test to achieve maximum damage.

8.7 1.2 Meter (4 Foot) Free Drop Test (10 CFR 71.71(c)(7))

The final Normal Transport Conditions test is the 1.2 meter (4 foot) free drop as described in 10 CFR 71.71(c)(7). The drop compounds any damage caused in the first two tests. Upon completion of this step, the first intermediate test inspections will be performed.

Refer to *Equipment List 3* for information about required tools. Use *Checklist 3* to ensure that the test sequence is followed. Use *Data Sheet 3* to record testing results. Sign and date all action items and record required data on the appropriate worksheets.

8.7.1 1.2 Meter (4 Foot) Free Drop Test Setup

In this test, the package is released from a height of four feet and lands on the steel drop surface specified in Drawing AT10122, Revision B.

This test requires that all test specimen be at -40°C or below at the time of impact. Follow the instructions in the appropriate checklist for measuring and recording the test specimen temperature before and after the drop.

To set up a package for the 1.2 meter (4 foot) free drop test:

1. Use the drop surface specified in Drawing AT10122, Rev. B.

2. Measure and record the test specimen temperature to ensure that the package is at the specified temperature.

3. Place the specimen on the drop surface and position it according to the appropriate orientation:

   - Refer to Figure 4 for the Specimen TP80(A) package orientation

   - Refer to Figure 5 for the Specimen TP80(B) package orientation

   - Refer to Figure 6 for the Specimen TP80(C) package orientation

4. Align the selected center-of-gravity as shown in the referenced drawing.

5. Raise the package so that the impact target is 4.0 to 4.5 feet above the drop surface.

6. Test specimen in accordance with *Checklist 3*.

8.7.2 1.2 Meter (4 Foot) Free Drop Test Orientation, Specimen TP80(A)

The impact surface of Specimen TP80(A) is horizontal, long-side down.

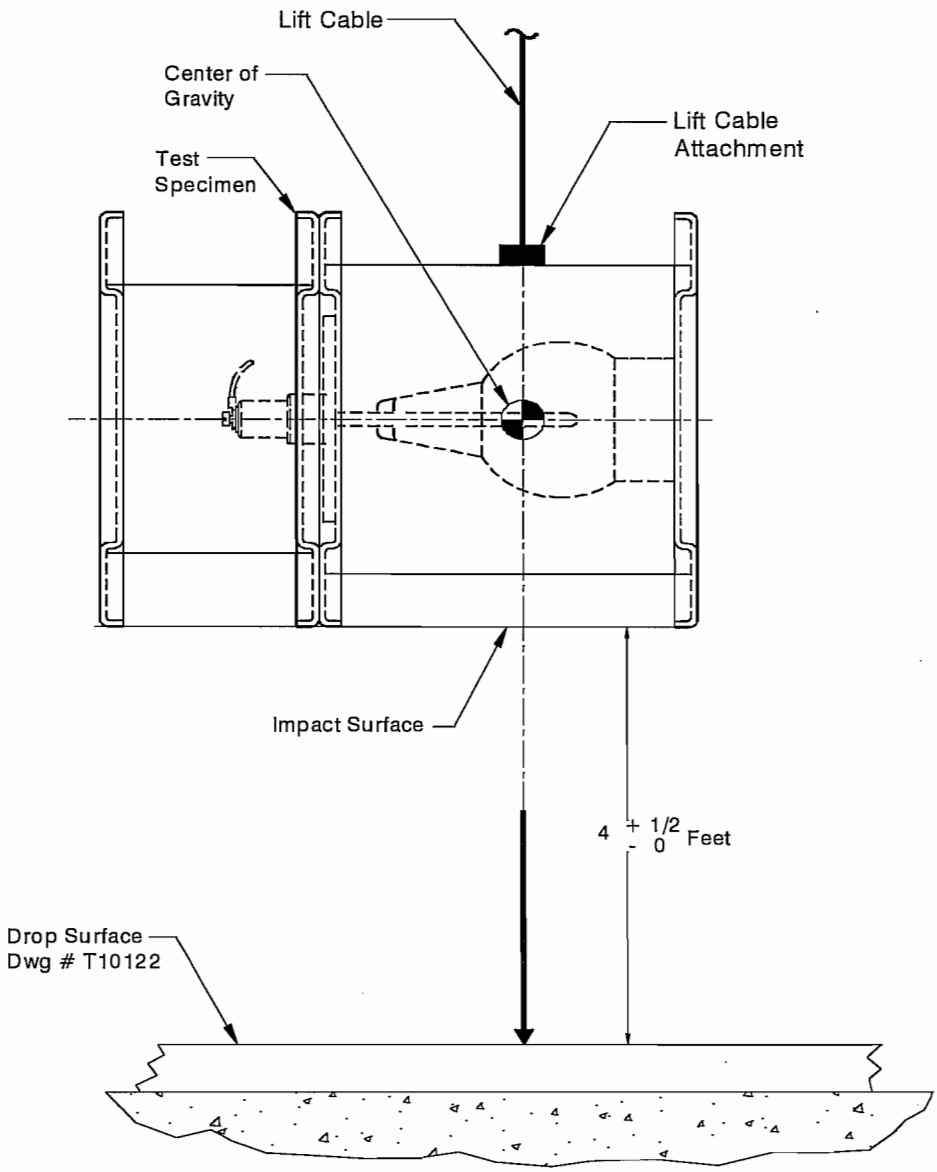

Figure 4. 1.2 Meter (4 Foot) Free Drop Orientation, Specimen TP80(A)

8.7.3 1.2 Meter (4 Foot) Free Drop Test Orientation, Specimen TP80(B)

The impact surface for Specimen TP80(B) is vertical, upside down.

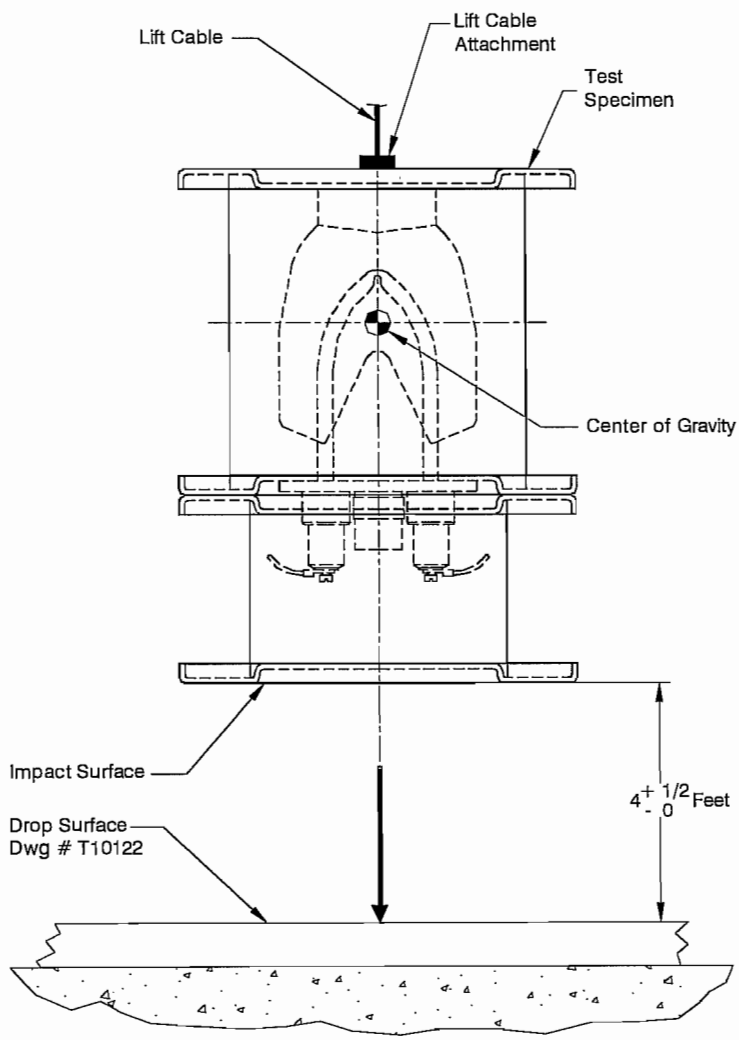

Figure 5. 1.2 Meter (4 Foot) Free Drop Orientation, Specimen TP80(B)

8.7.4 1.2 Meter (4 foot) Free Drop Test Orientation, Specimen TP80(C)

The impact surface for Specimen TP80(C) is the top (lid) corner.

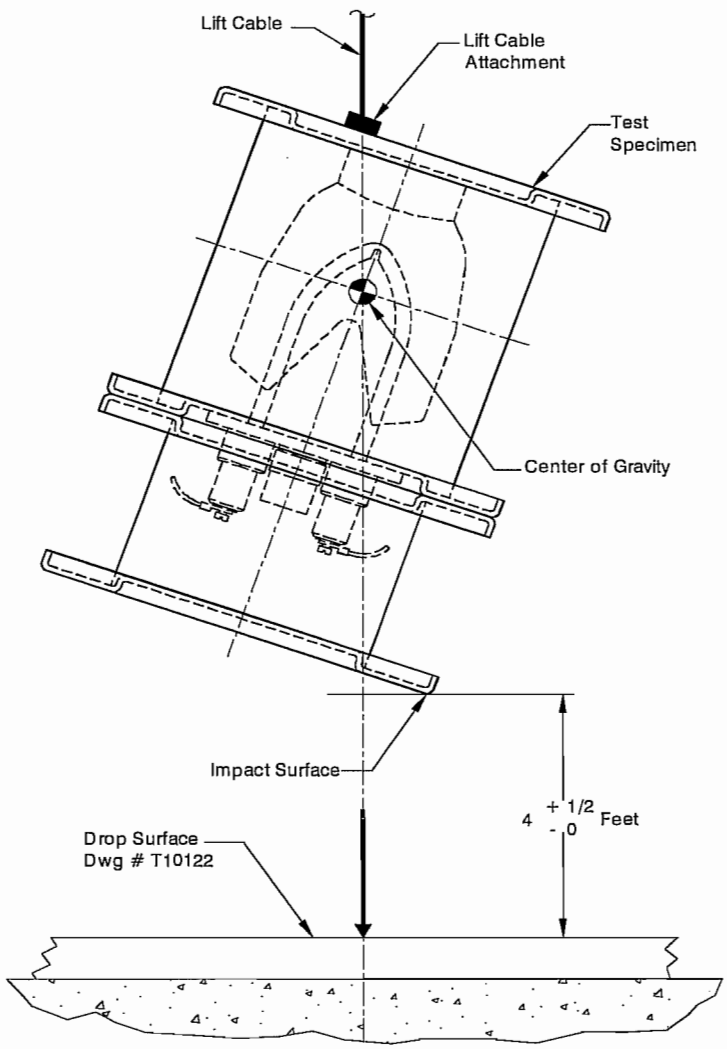

Figure 6. 1.2 Meter (4 Foot) Free Drop Orientation, Specimen TP80(C)

8.7.5 1.2 Meter (4 Foot) Free Drop Test Assessment

Upon completion of the test, **Engineering, Regulatory Affairs,** and **Quality Assurance** team members will jointly perform the following tasks:

1. Review the test execution to ensure that the test was performed in accordance with 10 CFR 71.71.

2. Make a preliminary evaluation of the specimen relative to the requirements of 10 CFR 71.71.

3. Assess the damage to the specimen to decide whether testing of that specimen is to continue.

4. Evaluate the condition of the specimen to determine if changes are necessary in package orientation for the 9 meter (30 foot) free drop to achieve maximum damage.

5. Measure and record any damage to the test specimen.

6. Measure and record a radiation profile of the test specimen in accordance with AEAT/QSA Work Instruction WI-Q09.

8.8 First Intermediate Test Inspection

Engineering, Regulatory Affairs, and **Quality Assurance** team members will make an assessment of the test specimen and jointly determine whether the specimen meets the requirements of 10 CFR 71.71.

8.9 9 Meter (30 Foot) Free Drop Test (10 CFR 71.73(c)(1))

The first Hypothetical Accident Conditions test is the 9 meter (30 foot) free drop as described in 10 CFR 71.73(c)(1). This drop uses the same orientations as the 1.2 meter (4 foot) free drop and compounds any damage caused in that test.

Refer to *Equipment List 4* for information about required tools. Use *Checklist 4* to ensure that the test sequence is followed. Use *Data Sheet 4* to record testing results. Sign and date all action items and record required data on the appropriate worksheets.

8.9.1 9 Meter (30 Foot) Free Drop Test Setup

In this test, the package is released from a height of thirty feet and lands on the steel drop surface specified in Drawing AT10122, Revision B.

This test requires that the test specimen be at -40°C or below at the time of impact. Follow the instructions in the appropriate checklist for measuring and recording the test specimen temperature before and after the drop.

To set up a package for the 9 meter (30 foot) free drop test:

1. Use the drop surface specified in Drawing AT10122, Rev. B.

2. Measure and record the test specimen temperature to ensure that the package is at the specified temperature.

3. Place the specimen on the drop surface and position it according to the appropriate orientation:

   - Refer to Figure 7 for the Specimen TP80(A) package orientation
   - Refer to Figure 8 for the Specimen TP80(B) package orientation
   - Refer to Figure 9 for the Specimen TP80(C) package orientation

4. Align the selected center-of-gravity marker as shown in the referenced drawing.

5. Raise the package so that the impact target is 30 to 31 feet above the drop surface.

6. Test the specimen in accordance with *Checklist 4*.

8.9.2 9 Meter (30 Foot) Free Drop Test Orientation, TP80(A)

The impact surface for Specimen TP80(A) is horizontal, long-side down. This orientation is the same as the orientation for the 1.2 meter (4 foot) drop for Specimen TP80(A).

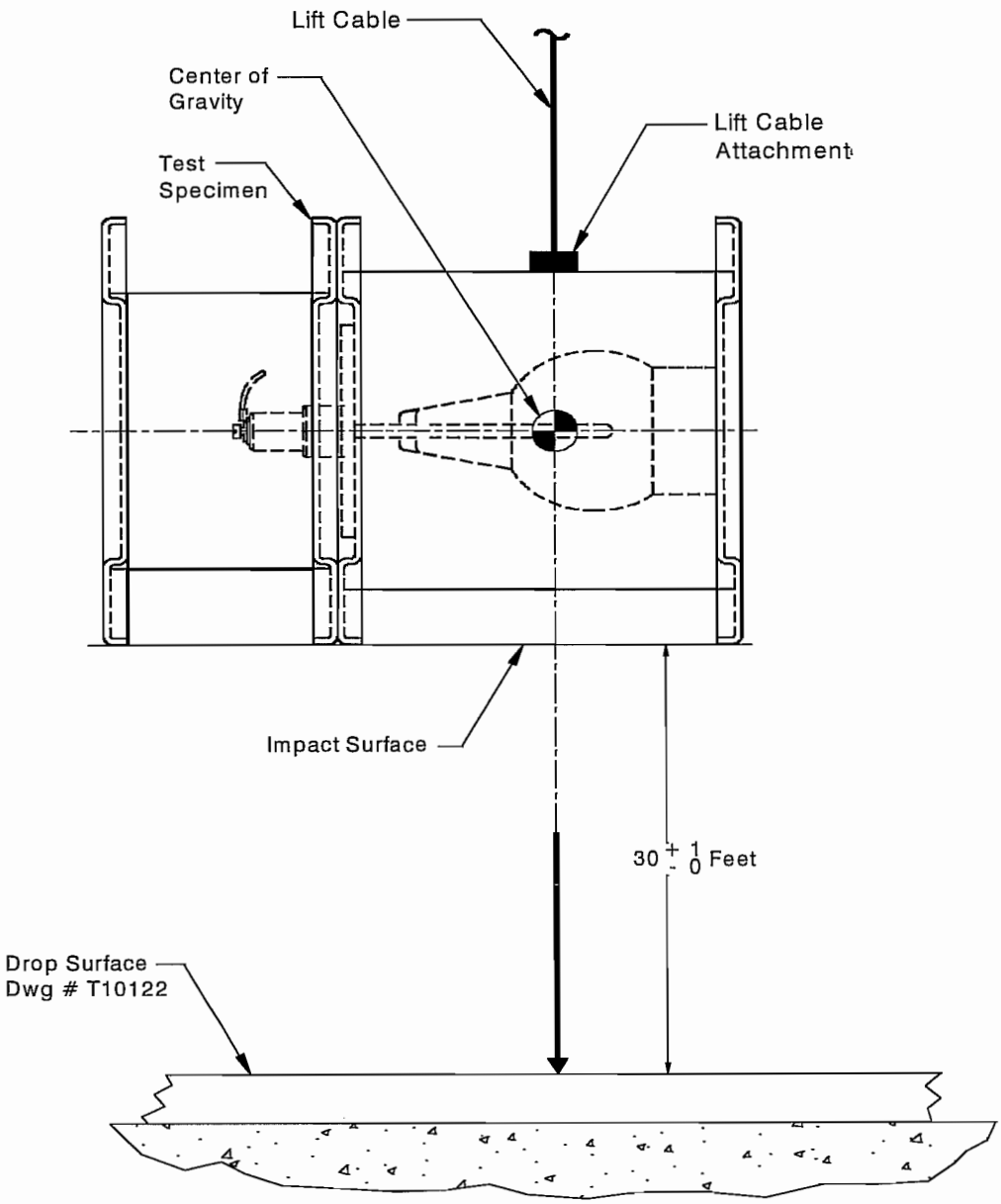

Figure 7. 9 Meter (30 Foot) Free Drop Orientation, Specimen TP80(A)

8.9.3 9 Meter (30 Foot) Free Drop Test Orientation, Specimen TP80(B)

The impact surface for Specimen TP80(B) is vertical, upside down. This orientation is the same as the orientation for the 1.2 meter (4 foot) drop for Specimen TP80(B).

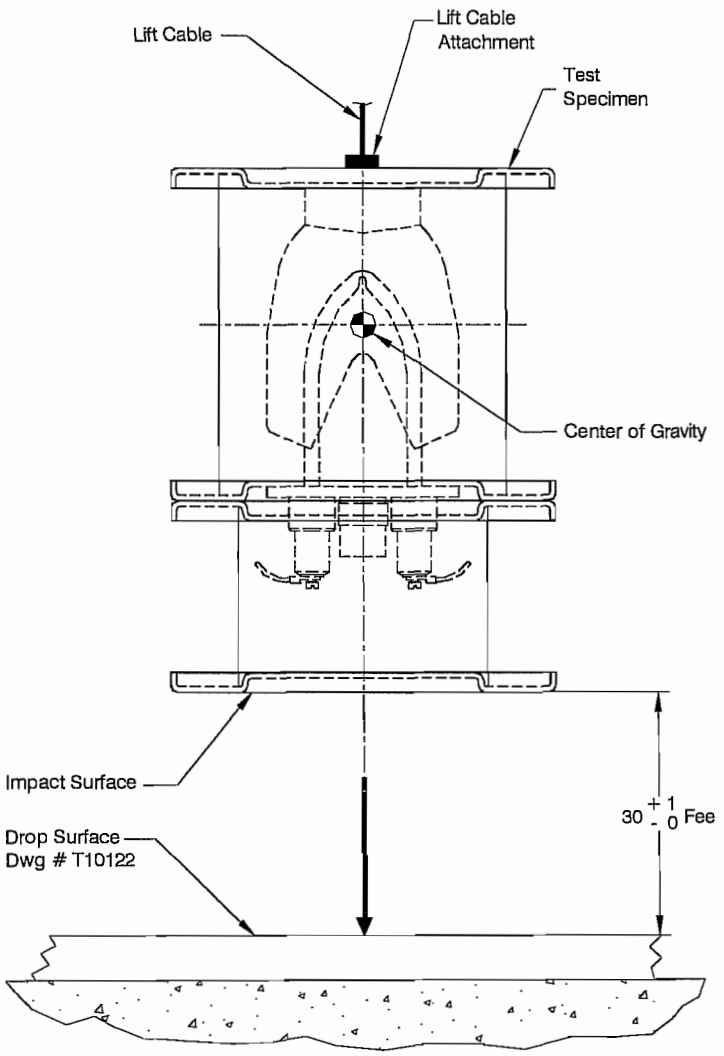

Figure 8. 9 Meter (30 Foot) Free Drop Orientation, Specimen TP80(B)

8.9.4 9 Meter (30 Foot) Free Drop Test Orientation, Specimen TP80(C)

The impact surface for Specimen TP80(C) is the top (lid) corner. This orientation is the same as the orientation for the 1.2 meter (4 foot) drop for Specimen TP80(C).

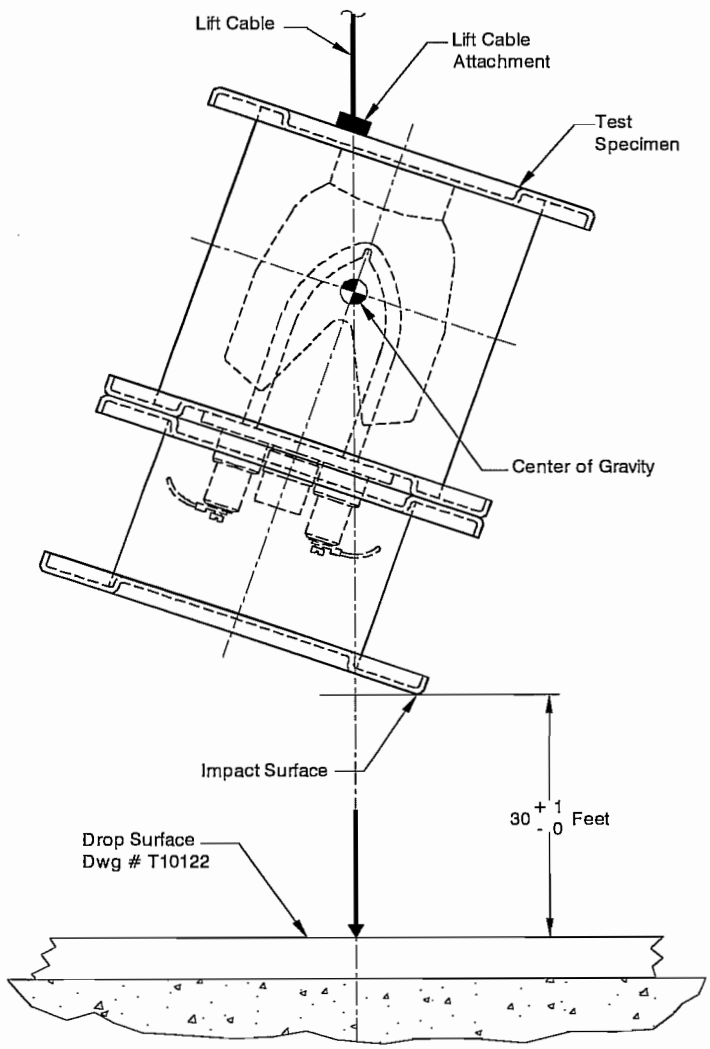

Figure 9. 9 Meter (30 Foot) Free Drop Orientation, Specimen TP80(C)

8.9.5 9 Meter (30 Foot) Free Drop Test Assessment

Upon completion of the test, **Engineering, Regulatory Affairs**, and **Quality Assurance** team members will jointly perform the following tasks:

1. Review the test execution to ensure that the test was performed in accordance with 10 CFR 71.73, and in accordance with the impact orientation and other conditions specified in this plan.

2. Make a preliminary evaluation of the specimen relative to the requirements of 10 CFR 71.73.

3. Perform an assessment to determine if any change in puncture test orientation is necessary in order to sustain maximum specimen damage during the Puncture Test, and document.

8.10 Puncture Test (10 CFR 71.73(c)(3))

The 9 meter (30 foot) free drop is followed by the puncture test, per 10 CFR 71.73(c)(3), in which the package is dropped from a height of at least 40 inches onto the puncture billet specified in the Drawing CT10119, Revision C.

The billet is to be bolted to the drop surface used in the free drop tests. The 12-inch high puncture billet meets the minimum height (8 inches) required in 10 CFR 71.73(c)(3). The specimen has no projections or overhanging members longer than 8 inches, which could act as impact absorbers, thus allowing the billet to cause the maximum damage to the specimen.

Refer to *Equipment List 5* for information about required tools. Use *Checklist 5* to ensure that the test sequence is followed. Use *Data Sheet 5* to record testing results. Sign and date all action items and record required data on the appropriate worksheets.

This test requires that the test specimen be at -40°C or below at the time of impact. Follow the instructions in the appropriate checklist for measuring and recording the test specimen temperature before and after the drop.

8.10.1 Puncture Test Setup

To set up a test specimen for the puncture test:

1. Measure and record the test specimen temperature to ensure that the package is at the specified temperature.

2. Place the specimen on the drop surface and position it according to the appropriate orientation (unless the 9 meter Test Assessment selects different orientations):

   - Refer to Figure 10 for the Specimen TP80(A) package orientation

   - Refer to Figure 11 for the Specimen TP80(B) package orientation

   - Refer to Figure 12 for the Specimen TP80(C) package orientation

3. Check the alignment of the specified center-of-gravity marker with the targeted point of impact.

4. Raise the package so that there are 40 to 42 inches between the package and the top of the puncture billet.

5. Test the specimen in accordance with *Checklist 5*.

8.10.2 Puncture Test Orientation, Specimen TP80(A)

The impact surface for Specimen TP80(A) is the horizontal, long-side of the outer shell.

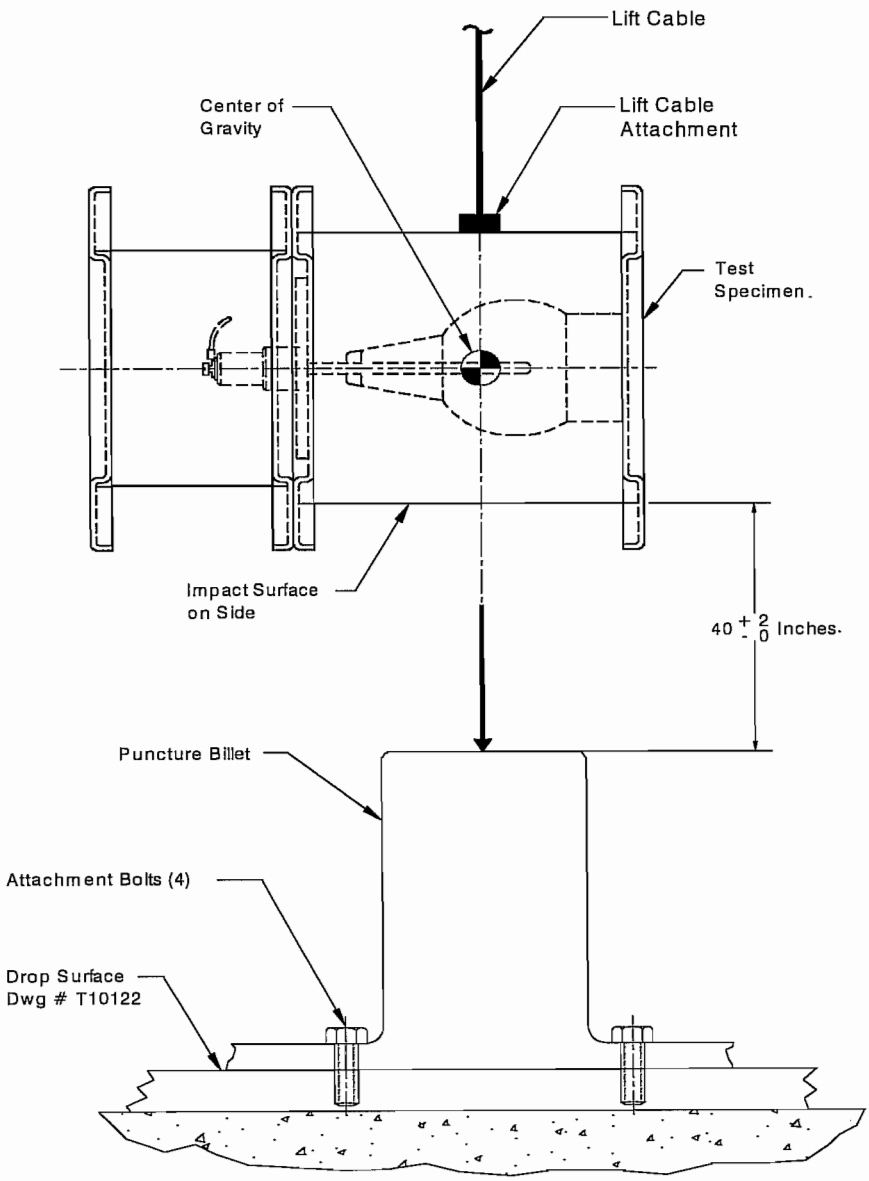

Figure 10. Puncture Test Orientation, Specimen TP80(A)

8.10.3 Puncture Test Orientation, Specimen TP80(B)

The impact surface for Specimen TP80(B) is the underside of the top plate. The puncture bar should impact the corner of the plate on the lid bolt.

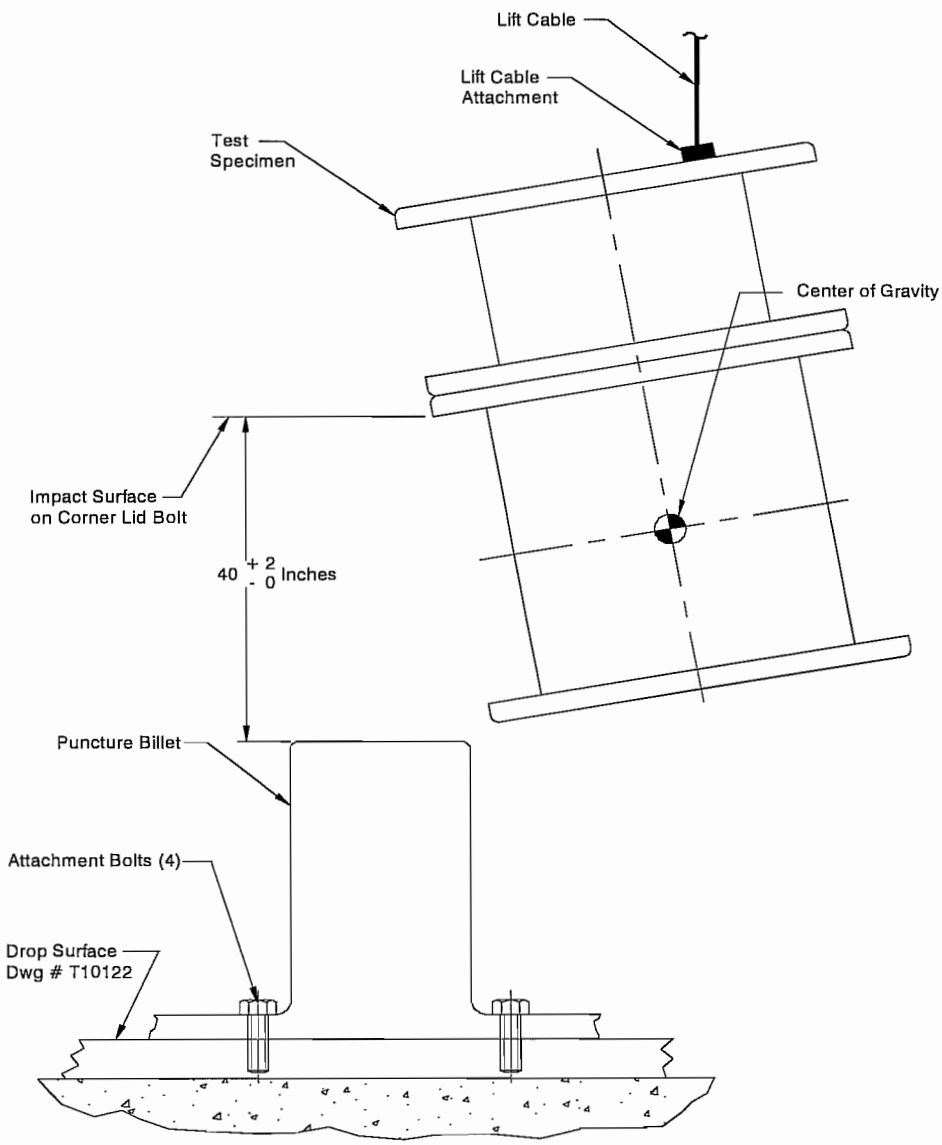

Figure 11. Puncture Test Orientation, Specimen TP80(B)

8.10.4 Puncture Test Orientation, Specimen TP80(C)

The impact surface for Specimen TP80(C) is the bottom of the package.

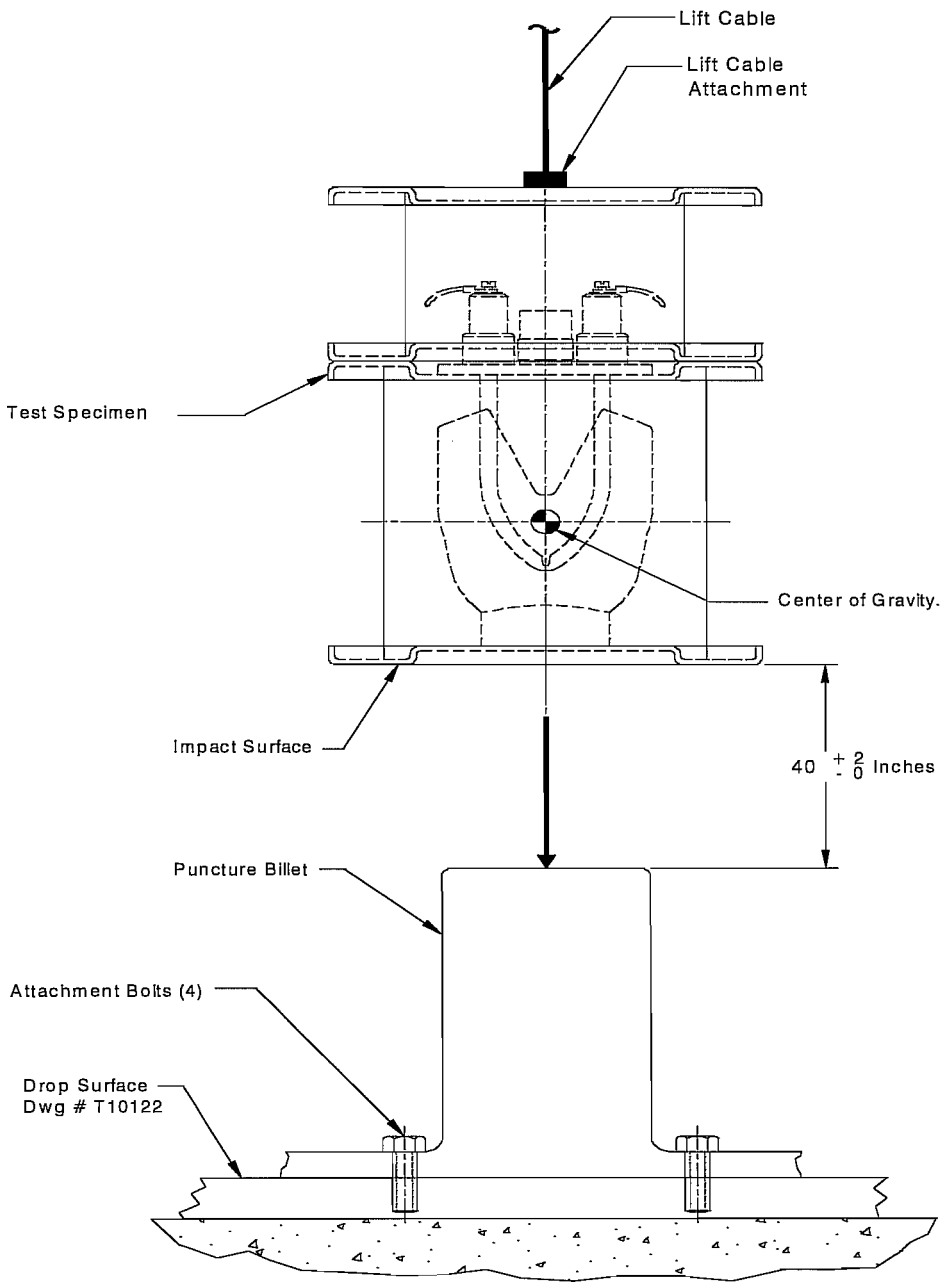

Figure 12. Puncture Test Orientation, Specimen TP80(C)

8.10.5 Puncture Test Assessment

Upon completion of the test, **Engineering, Regulatory Affairs**, and **Quality Assurance** team members will jointly perform the following tasks:

1. Review the test execution to ensure that the test was performed in accordance with 10 CFR 71.73, and in accordance with any other conditions specified in this plan.

2. Make a preliminary evaluation of the specimen relative to the requirements of 10 CFR 71.73.

3. Assess the damage to the specimen to decide whether testing of the specimen is to continue.

8.11 Second Intermediate Test Inspection

Perform a second intermediate test inspection of all specimens after the puncture test and before the thermal test.

1. Measure and record any damage to the test specimen.

2. Determine and record the location of the source.

3. Remove and assess the condition of the simulated source.

4. Reassemble the package using an active source, making sure that the source wire position and the package configuration are the same as they were immediately after the puncture test.

5. Measure and record a radiation profile of the test specimen in accordance with AEAT/QSA Work Instruction WI-Q09.

6. Reassemble the package using the same simulated source used in the specimen during the previous tests.

7. Make sure that the source wire position and the package configuration are the same as they were immediately after the puncture test.

8. Weigh package.

8.12 Thermal Test (10 CFR 71.73(c)(4))

The final requirement is the thermal test specified in 10 CFR 71.73(c)(4).

Refer to *Equipment List 6* for information about required tools. Use *Checklist 6* to ensure that the test sequence is followed. Use *Data Sheet 6* to record testing results. Sign and date all action items and record required data on the appropriate worksheets.

8.12.1 Test Specimen Selection

The specimen(s) selected for thermal testing will be based on an assessment of the damage sustained by the packages following the puncture test. The selected package testing orientation will also be determined based on an assessment of the test specimen condition. As a minimum requirement, the vertical, upside down drop orientation (TP80(B)) will be tested in a vertical, right

side up orientation for the thermal test. The TP80(B) specimen is most likely to have the source pull out from its shielded position due to deflection of the top plate during the drop tests and melting of lead shielding/shims below the DU shield during the thermal test.

8.12.2 Thermal Test Setup

To ensure sufficient heat input to the test specimens, the oven will be pre-heated to a temperature of not less than 810°C. This temperature, above the required 800°C, includes an allowance for measurement uncertainty.

The test environment is a vented electric oven capable of creating a time weighted average temperature of 800°C.

Thermocouples will be attached to the specimen top, bottom, and 2 side surfaces. The 2 side surface thermocouples will be positioned 180° apart, facing the front and back of the oven. A fifth thermocouple will be inserted into one of the source tubes to measure source changer internal temperature. The external thermocouples will be shielded from the radiant heat of the oven so that the surface temperature of the source changer can be accurately measured.

When the oven has been pre-heated to 810°C, the package will be placed in the oven in the orientation determined to be worst case, per Section 8.10.2. When the temperature of the source changer surface has risen to no less than 810°C, the test will start. The package will remain in the oven for a period of 30 minutes after the start of the test.

To allow for combustion of the foam during the thermal test, the oven door will remain slightly open. It has been determined that a gap of one inch at the top and bottom of the oven door allows airflow into the oven and allows the oven to maintain its temperature. The oven door is 36 inches long. As a result, there will be about a 36 square inch opening at both the top and bottom of the furnace door. This allows for the natural convection of air into the furnace.

If the specimen is burning when the oven is opened, the unit will be allowed to extinguish by itself and then cool naturally. Although solar radiation assumed during a hypothetical accident could reduce the rate of package cooldown, such a reduction in cooldown rate is considered to have a negligible effect on the package compared with the 30 minutes of exposure to 810°C. This test plan, therefore, does not require insolation effects to be explicitly modeled during package cooldown. Appropriate measures should be taken to avoid the radiological risks associated with this potential hazard. The final evaluation of the package is performed when the specimen reaches ambient temperature.

8.12.3 Thermal Test Procedure

To perform the thermal test:

1. Attach the thermocouples to the test specimen's measurement locations.

2. Preheat the oven temperature to not less than 810°C.

3. When the oven temperature is stable at above 810°C, place the specimen in the oven, and partially close the door.

4. When the temperature of the surface of the specimen rises above 810°C, start the 30-minute time interval.

5. Throughout the test, measure and record the oven and the test specimen temperatures.

6. At the end of the 30 minute time interval, open the oven door and shut off the oven.

WARNING: If the package is burning, appropriate safety measures must be in place to avoid the risks associated with burning polyurethane foam and/or depleted uranium. Consult with the oven operator and other appropriate personnel.

7. Allow the package to self-extinguish and cool.

8. Record any damage to the package and make a photographic and radiographic record of shield position and damage.

8.12.4 Thermal Test Assessment

Upon completion of the test, **Engineering, Regulatory Affairs**, and **Quality Assurance** team members will jointly perform the following task:

1. Review the test execution to ensure that the test was performed in accordance with 10 CFR 71.73 and the test conditions specified in this plan.

2. Make a preliminary evaluation of the specimen relative to the requirements of 10 CFR 71.73.

8.13 Final Test Inspection

Perform the following inspections after completion of all the required testing:

1. Measure and record any damage to the test specimen.

2. Determine and record the location of the source.

3. Remove and assess the condition of the simulated source.

4. Reassemble the package using an active source, making sure that the source wire position and the package configuration are the same as they were immediately after the thermal test.

5. Measure and record a radiation profile of the test specimen in accordance with AEAT/QSA Work Instruction WI-Q09.

6. Document and assess the radiation level at one meter from the surface of the package.

7. Determine whether it is necessary to dismantle the test specimen for inspection of hidden component damage or failure.

8. If proceeding with the inspection, record and photograph the process of removing any component.

9. Measure and record any damage or failure found in the process of dismantling the test specimen.

Engineering, Regulatory Affairs, and **Quality Assurance** team members will make a final assessment of the test specimen and jointly determine whether the specimen meets the testing requirements of 10 CFR 71.

9.0 Worksheets

Use the following worksheets for executing these tests. There are three worksheets for each test: an equipment list, a test procedure checklist, and a data sheet.

Use the test equipment list to record the serial number of each measurement device used. Attach a copy of the relevant inspection report or calibration certificate after verifying the range of accuracy of the equipment.

Quality Control will initial each step on the checklist as it is executed and record data as required. The **Engineering, Regulatory Affairs**, and **Quality Assurance** representatives must witness all testing to ensure the testing is performed in accordance with this test plan and 10 CFR 71.

Make copies of the forms for additional attempts. Maintain records of all attempts.

Specimen Preparation List

Step	TP80(A)	TP80(B)	TP80(C)
1. Serial Number:			
2. Total weight of package (lb):			
3. Location of simulated source from top plate (in):			
4. Location of lead shielding:			
5. All fabrication and inspection records documented in accordance with the AEAT QA Program?			
6. Does the unit comply with the requirements of Drawing R-TP80, Revision D?			
7. Has the radiation profile been recorded in accordance with AEAT QSA Work Instruments WI-Q09?			
8. Is the package prepared for transport?			

Verified by:	Print Name:	Signature:	Date:
Engineering			
Regulatory Affairs			
Quality Assurance			

Equipment List 1: Compression Test

Description	Enter the Model and Serial Number	Attach Inspection Report or Calibration Certificate
Weight Scale		
Record any additional tools used to facilitate the test and attach the appropriate inspection report or calibration certificate.		

	Print Name:	Signature:	Date:
Completed by:			
Verified by:			

Checklist 1: Compression Test

Step	TP80(A)	TP80(B)	TP80(C)
1. Position the specimen on concrete surface, per the appropriate drawing.	Figure 2	Figure 2	Figure 2
2. Measure the ambient temperature.			
Note the instrument used:			
3. Apply a uniformly distributed weight of 455 to 465 pounds on the top of the lid for a period of 24 hours.			
Record the actual weight:			
Note the instrument used:			
Record start time and date:			
4. After 24 hours, remove the weight.			
Record end time and date:			
5. Measure the ambient temperature.			
Note the instrument used:			
6. Photograph the test specimen and record any damage on Data Sheet 1.			
7. **Engineering, Regulatory Affairs and Quality Assurance** make a preliminary assessment relative to 10 CFR 71. Record the assessment on Data Sheet 1. Determine what changes are necessary in package orientation for the penetration test to achieve maximum damage.			

Verified by:	Print Name:	Signature:	Date:
Engineering			
Regulatory Affairs			
Quality Assurance			

Data Sheet 1: Compression Test

Test Unit Model and Serial Number:		Test Specimen:
Test Date:	Test Time:	Test Plan 80 Step No.: **8.5**

Describe test orientation and setup:

Describe on-site inspection (damage, broken parts, etc.):

On-site assessment:

Engineering: _____ Regulatory: _____ QA: _____

Describe any post-test disassembly and inspection:

Describe any change in source position:

Describe results of any pre- or post-test radiography:

Completed by:	Date:

Equipment List 2: Penetration Test

Description	Enter the Model and Serial Number	Attach Inspection Report or Calibration Certificate
Penetration Bar	Drawing BT10129, Rev. B	
Drop Surface	Drawing AT10122, Rev. B	
Thermometer		
Thermocouple		
Thermocouple		
Record any additional tools used to facilitate the test and attach the appropriate inspection report or calibration certificate.		

	Print Name:	Signature:	Date:
Completed by:			
Verified by:			

Checklist 2: Penetration Test

Step	TP80(A)	TP80(B)	TP80(C)
1. Immerse the test specimen in dry ice or cool in freezer as needed to bring specimen temperature below –40°C.			
2. Position the package as shown in the referenced figure, or by Step 7, Checklist 1.	Figure 3	Figure 3	Figure 3
3. Begin video recording of the test.			
4. Inspect the orientation setup and verify the bar height.			
5. Photograph the set-up in at least two perpendicular planes.			
6. Measure the ambient temperature and the specimen's internal and surface temperatures. Ensure that the specimen is at the specified temperature.			
Record the ambient temperature:			
Note the instrument used:			
Record the specimen's internal temperature:			
Note the instrument used:			
Record the specimen's surface temperature:			
Note the instrument used:			
7. Drop the penetration bar.			
8. Check to ensure that penetration bar hit the specified area.			
9. Measure the specimen's surface temp. Ensure that specimen is at specified temp.			
Note the instrument used:			
10. Photograph the test specimen and record any damage on Data Sheet 2.			
11. **Engineering, Regulatory Affairs and Quality Assurance** make a preliminary assessment relative to 10 CFR 71. Record the assessment on Data Sheet 2. Determine what changes are necessary in package orientation for the 1.2 meter (4 foot) free drop to achieve maximum damage.			

Verified by:	Print Name:	Signature:	Date:
Engineering			
Regulatory Affairs			
Quality Assurance			

Data Sheet 2: Penetration Test

Test Unit Model and Serial Number:		Test Specimen:
Test Date:	Test Time:	Test Plan 80 Step No.: **8.6**

Describe test orientation and setup:

Describe impact (location, rotation, etc.):

Describe on-site inspection (damage, broken parts, etc.):

On-site assessment:

Engineering: _____ Regulatory: _____ QA: _____

Describe any post-test disassembly and inspection:

Describe any change in source position:

Describe results of any pre- or post-test radiography:

Completed by:	Date:

Equipment List 3: 1.2 Meter (4 Foot) Free Drop

Description	Enter the Model and Serial Number	Attach Inspection Report or Calibration Certificate
Drop Surface	Drawing AT10122, Rev. B	
Thermometer		
Thermocouple		
Thermocouple		
Record any additional tools used to facilitate the test and attach the appropriate inspection report or calibration certificate.		

	Print Name:	Signature:	Date:
Completed by:			
Verified by:			

Checklist 3: 1.2 Meter (4 Foot) Free Drop

Step	TP80(A)	TP80(B)	TP80(C)
1. Immerse specimen in dry ice or cool in freezer to bring specimen below –40°C.			
2. Measure the ambient temperature.			
Note the instrument used:			
3. Attach the test specimen to the release mechanism.			
4. Begin video recording of the test.			
5. Measure specimen internal and surface temps. Ensure specimen is at specified temp.			
Record the specimen's internal temperature:			
Note the instrument used:			
Record the specimen's surface temperature:			
Note the instrument used:			
6. Lift and orient the test specimen as shown in the specified referenced figure.	Figure 4	Figure 5	Figure 6
7. Inspect the orientation setup and verify drop height.			
8. Photograph the set-up in at least two perpendicular planes.			
9. Release the test specimen.			
10. Measure specimen internal and surface temps. Ensure specimen is at specified temp.			
Record the specimen's internal temperature:			
Note the instrument used:			
Record the specimen's surface temperature:			
Note the instrument used:			
11. Photograph the test specimen and record any damage on Data Sheet 3.			
12. Measure and record a radiation profile of the test specimen in accordance with AEAT/QSA Work Instruction WI-Q09.			
13. **Engineering, Regulatory Affairs and Quality Assurance** make a preliminary assessment relative to 10 CFR 71, and record on Data Sheet 3. Determine package orientation for the 9 meter free drop to achieve maximum damage.			

Verified by:	Print Name:	Signature:	Date:
Engineering			
Regulatory Affairs			
Quality Assurance			

Data Sheet 3: 1.2 Meter (4 Foot) Free Drop

Test Unit Model and Serial Number:		Test Specimen:
Test Date:	Test Time:	Test Plan 80 Step No.: **8.7**

Describe drop orientation and drop height:

Describe impact (location, rotation, etc.):

Describe on-site inspection (damage, broken parts, etc.):

On-site assessment:

Engineering: _____ Regulatory: _____ QA: _____

Describe any post-test disassembly and inspection:

Describe any change in source position:

Describe results of any pre- or post-test radiography:

Completed by:	Date:

Equipment List 4: 9 Meter (30 Foot) Free Drop

Description	Enter the Model and Serial Number	Attach Inspection Report or Calibration Certificate
Drop Surface	Drawing AT10122, Rev. B	
Thermometer		
Thermocouple		
Thermocouple		
Record any additional tools used to facilitate the test and attach the appropriate inspection report or calibration certificate.		

	Print Name:	Signature:	Date:
Completed by:			
Verified by:			

Checklist 4: 9 Meter (30 Foot) Free Drop

Step	TP80(A)	TP80(B)	TP80(C)
1. Immerse test specimen in dry ice or cool in freezer to bring specimen temperature below –40°C.			
2. Measure the ambient temperature.			
Note the instrument used:			
3. Attach the test specimen to the release mechanism.			
4. Begin Video Recording of the test.			
5. Measure specimen's internal and surface temps. Ensure specimen is at the specified temperature.			
Record the specimen's internal temperature:			
Note the instrument used:			
Record the specimen's surface temperature:			
Note the instrument used:			
6. Lift and orient the test specimen as shown in the specified referenced figure.	Figure 7	Figure 8	Figure 9
7. Inspect the orientation setup and verify drop height.			
8. Photograph the setup in at least two perpendicular planes.			
9. Release the test specimen.			
10. Measure specimen's internal and surface temps. Ensure specimen is at specified temperature.			
Record the specimen's internal temperature:			
Note the instrument used:			
Record the specimen's surface temperature:			
Note the instrument used:			
11. Photograph the test specimen and record any damage on Data Sheet 4.			
12. **Engineering, Regulatory Affairs and Quality Assurance** make a preliminary assessment relative to 10 CFR 71. Record assessment on Data Sheet 4. Determine what changes are necessary in package orientation for the puncture test to achieve maximum damage.			

Verified by:	Print Name:	Signature:	Date:
Engineering			
Regulatory Affairs			
Quality Assurance			

Data Sheet 4: 9 Meter (30 Foot) Free Drop

Test Unit Model and Serial Number:		Test Specimen:
Test Date:	Test Time:	Test Plan 80 Step No.: **8.9**

Describe drop orientation and drop height:

Describe impact (location, rotation, etc.):

Describe on-site inspection (damage, broken parts, etc.):

On-site assessment:

Engineering: _____ Regulatory: _____ QA: _____

Describe any post-test disassembly and inspection:

Describe any change in source position:

Describe results of any pre- or post-test radiography:

Completed by:	Date:

Equipment List 5: Puncture Test

Description	Enter the Model and Serial Number	Attach Inspection Report or Calibration Certificate
Drop Surface	Drawing AT10122, Rev. B	
Puncture Billet	Drawing CT10119, Rev. C	
Thermometer		
Thermocouple		
Thermocouple		
Record any additional tools used to facilitate the test and attach the appropriate inspection report or calibration certificate.		

	Print Name:	Signature:	Date:
Completed by:			
Verified by:			

Checklist 5: Puncture Test

Step	TP80(A)	TP80(B)	TP80(C)
1. Immerse specimen in dry ice or cool in freezer to bring specimen temp. below –40°C.			
2. Measure the ambient temperature.			
Note the instrument used:			
3. Attach the test specimen to the release mechanism.			
4. Begin Video Recording of the test.			
5. Measure specimen's internal and surface temps. Ensure that specimen is at specified temp.			
Record the specimen's internal temperature:			
Note the instrument used:			
Record the specimen's surface temperature:			
Note the instrument used:			
6. Lift and orient the test specimen as shown in the specified referenced figure, or as determined during the assessment of the 9 Meter (30 Foot) Drop Test.	Figure 10	Figure 11	Figure 12
7. Inspect the orientation setup and verify drop height.			
8. Photograph the set-up in at least two perpendicular planes.			
9. Release the test specimen.			
10. Measure the specimen's internal and surface temperatures.			
Record the specimen's internal temperature:			
Note the instrument used:			
Record the specimen's surface temperature:			
Note the instrument used:			
11. Photograph the test specimen and record any damage on Data Sheet 5.			
12. **Engineering, Regulatory Affairs and Quality Assurance** make a preliminary assessment relative to 10 CFR 71. Record assessment on Data Sheet 5. Determine what changes are necessary in package orientation for thermal test to achieve maximum damage.			

Verified by:	Print Name:	Signature:	Date:
Engineering			
Regulatory Affairs			
Quality Assurance			

Data Sheet 5: Puncture Test

Test Unit Model and Serial Number:		Test Specimen:
Test Date:	Test Time:	Test Plan 80 Step No.: **8.10**

Describe drop orientation and drop height:

Describe impact (location, rotation, etc.):

Describe on-site inspection (damage, broken parts, etc.):

On-site assessment:

Engineering: _____ Regulatory: _____ QA: _____

Describe any post-test disassembly and inspection:

Describe any change in source position:

Describe results of any pre- or post-test radiography:

Completed by:	Date:

Equipment List 6: Thermal Test

Description	Enter the Model and Serial Number	Attach Inspection Report or Calibration Certificate
Bottom Surface Thermocouple 1		
Top Surface Thermocouple 2		
Side Surface Facing Oven Front Thermocouple 3		
Side Surface Facing Oven Rear Thermocouple 4		
Source Tube Thermocouple 5		
Oven		
Oven thermostat		
Record any additional tools used to facilitate the test and attach the appropriate inspection report or calibration certificate.		

	Print Name:	Signature:	Date:
Completed by:			
Verified by:			

Checklist 6: Thermal Test

Step	TP80(A)	TP80(B)	TP80(C)
1. Record Test Specimen Serial Number.			
2. Preheat the oven to 810°C.			
3. Attach the thermocouples as described in Equipment List 6. Ensure the recording devices are active, and that the external thermocouples are shielded.			
4. Place the package in the oven in the worst case orientation and partially close the oven door such that a 1 inch by 36 inch opening is provided. Record the time.			
5. When all of the test specimen's surface temperatures exceed 810°C, begin the 30-minute time interval. Record the time.			
6. Monitor and record the test specimen and the oven temperatures throughout the 30-minute period to ensure that they are above 810°C			
7. At the end of the 30-minute test period, shut off the oven and open the door. Record the time.			
8. Describe combustion when door is opened.			
9. Allow the specimen to cool, then remove the specimen from the oven. Record the time.			
NOTE: If specimen continues to burn, let it self-extinguish and cool naturally.			
10. Measure and record the ambient temperature.			
11. Photograph the test specimen and record any damage on data sheet 6.			
12. Radiograph the unit to determine the shield location.			
13. Measure and record the source location.			
14. **Engineering, Regulatory Affairs and Quality Assurance** make a preliminary assessment relative to 10 CFR 71. Record assessment on Data Sheet 6.			

Verified by:	Print Name:	Signature:	Date:
Engineering			
Regulatory Affairs			
Quality Assurance			

Data Sheet 6: Thermal Test

Test Unit Model and Serial Number:		Test Specimen:
Test Date:	Test Time:	Test Plan 80 Step No.: **8.12**
Describe test orientation and setup:		
Describe package during testing:		
Describe on-site inspection (damage, broken parts, etc.):		
On-site assessment: Engineering: _____ Regulatory: _____ QA: _____		
Describe any post-test disassembly and inspection:		
Describe any change in source position:		
Describe results of any pre- or post-test radiography:		
Completed by:		Date:

Appendix A: Drawing R-TP80, Revision D

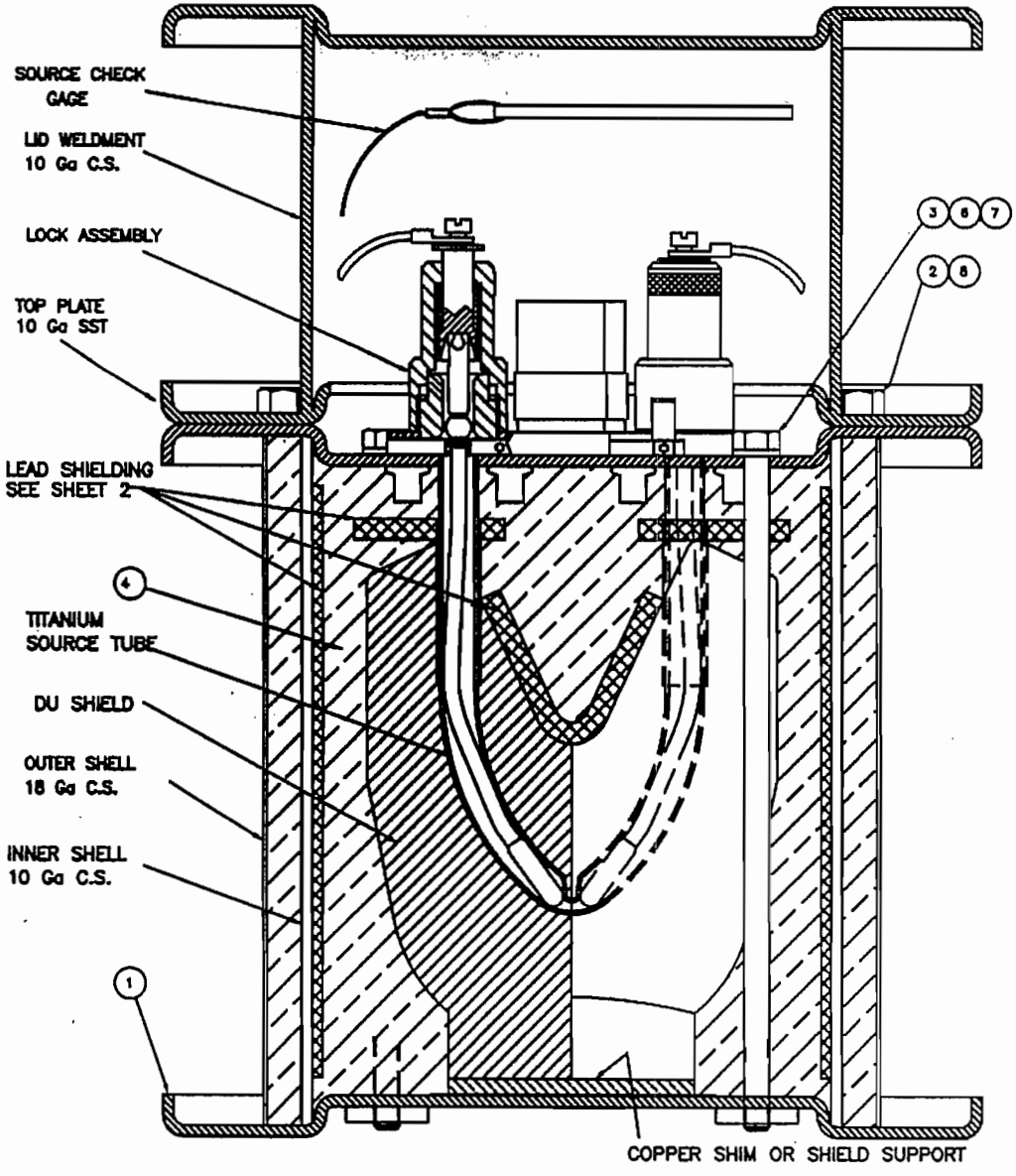

Notes:

1. Refer to Drawing C65009 for construction of original unit.

2. Modify unit as follows:
   a) Remove lid and discard bolts.
   b) Remove through bolts and discard.
   c) If bottom plate is carbon steel, remove existing plate. Patch missing or damaged foam with new Vultafoam., Item (4). Install new stainless steel bottom plate, Item (1).
   d) Install new through bolts, Item (3), with lock washers, torque through bolts to 100±5 in-lbs and install safety wire for security.
   e) Install two (2) dummy source assembly 424-9's, one in each side.

3. Verify marking on new lid bolts, Item (2), is "B8".

4. Install lid with new lid bolts, Item (2), and install seal wire for shipment tamper indicator.

ITEM	QTY	DESCRIPTION
8	AR	TAMPER PROOF SEAL WIRE
7	AR	SAFETY WIRE
6	4	LOCK WASHER 5/16 DIA
4	AR	VULTAFOAM #16-L-708
3	4	HEX HEAD BOLT 5/16-18 X 8 LG. DRILLED HEAD, 300 SERIES (18-8) STAINLESS STEEL
2	4	HEX HEAD BOLT 3/8-16 X 7/8 LG. DRILLED HEAD, A198 GR B8 CL 2
1	1	BOTTOM PLATE

UNLESS OTHERWISE SPECIFIED:
ALL DIMENSIONS ARE INCHES AND REFERENCE

AEA TECHNOLOGY QSA
40 NORTH AVE, BURLINGTON, MA 01803

DESCRIPTIVE DRAWING

TITLE 650L SOURCE CHANGER TEST UNITS

DESCRIPTION	APPROVALS	DATE	LTR
DDCO#33 SEE DDCO	LR / (SO)	12 MAR99	D
DDCO#32 REMOVE LOCK WASHER (ITEM 5)	LR/MT	4MAR99	C
DDCO#31 FORMAT CORRECTED	MT/TL	25FEB99	B

REVISIONS

SIZE A | DWG. NO. R-TP80 | REV D
SCALE: NONE | SHEET 1 OF 2

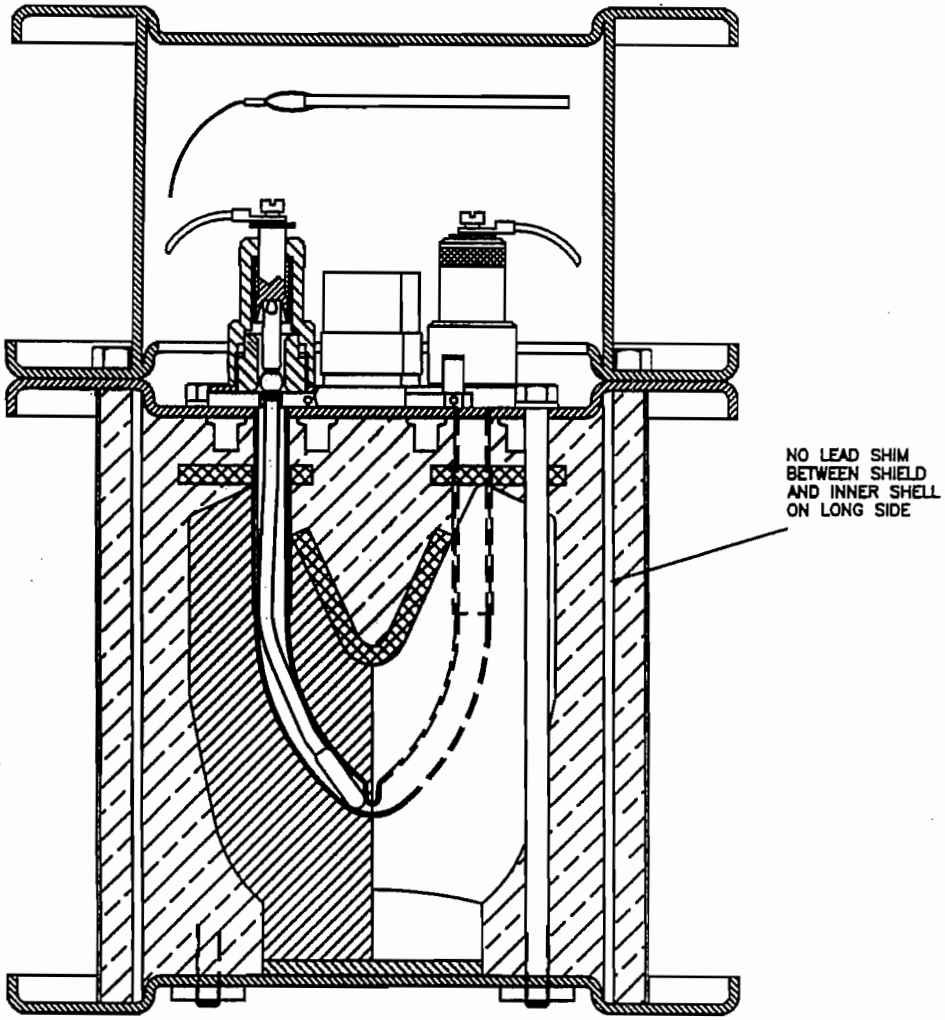

TP 80 (A)

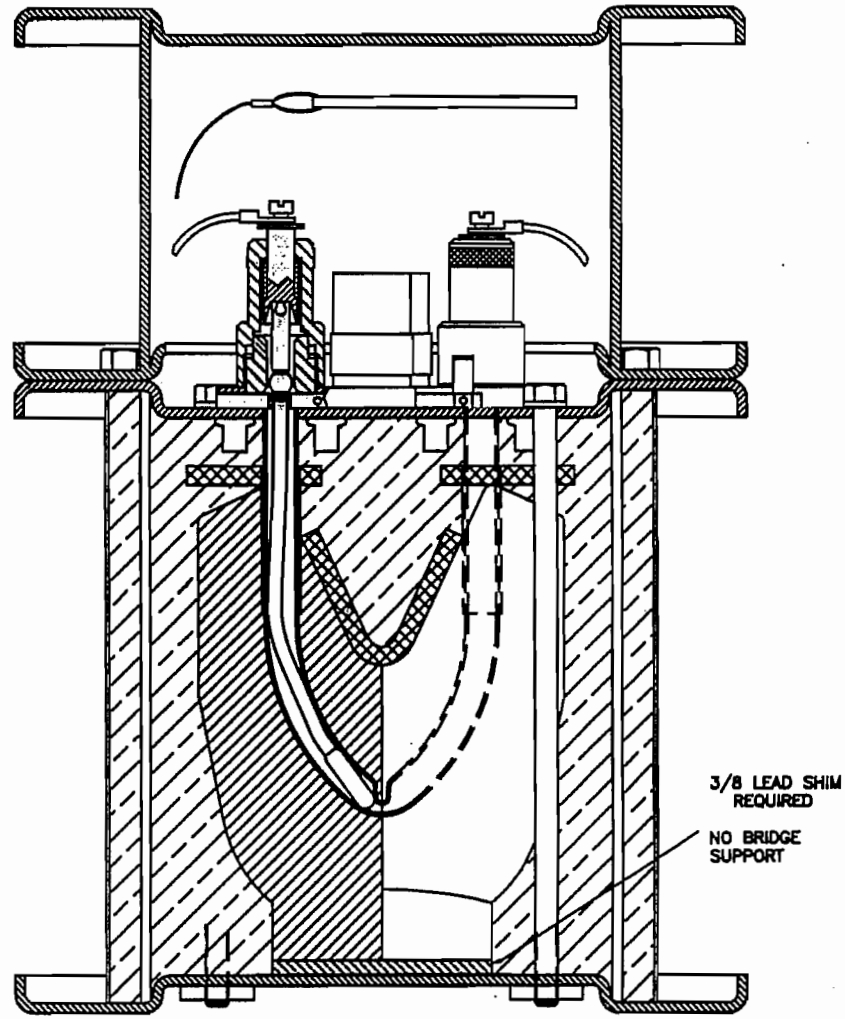

TP 80 (B)

NOTE:
NO SPECIAL REQUIREMENTS
FOR
LEAD LOCATION IN TP80(C)

UNLESS OTHERWISE SPECIFIED: ALL DIMENSIONS ARE REFERENCE			
SIZE A	DWG. NO. R–TP80		REV D
	SCALE: NONE	SHEET 2 OF 2	

2.12.9 Test Plan 80 Report Minus Manufacturing Records (Jun 1999)

AEA TECHNOLOGY QSA

TEST PLAN NO. 80, Rev. 1

TEST PLAN COVER SHEET

TEST TITLE: TEST PLAN 80, REVISION 1, MODEL 650L SOURCE CHANGER TYPE B TRANSPORT TESTS

PRODUCT MODEL: 650L

ORIGINATED BY: [signature] (MPR) DATE: 12 MAR 99

TEST PLAN REVIEW

ENGINEERING APPROVAL: [signature] DATE: 12 MAR 99

QUALITY ASSURANCE APPROVAL: Daniel W. Kurtz DATE: 12 Mar 99

REGULATORY APPROVAL: [signature] DATE: 12 Mar 99

COMMENTS:

TEST RESULTS REVIEW

ENGINEERING APPROVAL: [signature] DATE: 12 JUL 99

QUALITY ASSURANCE APPROVAL: Daniel W. Kurtz DATE: 13 Jul 99

REGULATORY APPROVAL: C. Ronpan DATE: 13 Jul 99

SENTINEL

TEST PLAN 80 REPORT

MODEL 650L

June 1999

Prepared By: Laura Ridzon Date: 28 JUN 99
Laura Ridzon, MPR Associates, Inc.

Reviewed By: Nicholas J. Marrone Date: 28 June 99
Nicholas J. Marrone, MPR Associates, Inc.

Approved By: Caroline S. Schlaseman Date: 28 JUN 99
Caroline S. Schlaseman, MPR Associates, Inc.

AEA Technology QSA, Inc.
Burlington, MA

TABLE OF CONTENTS

1. PURPOSE 1
2. SCOPE OF TESTING 2
3. FAILURE MODES 3
4. TEST UNIT DESCRIPTION 4
5. SUMMARY AND CONCLUSIONS 5
6. TP80 NORMAL TESTS 8
   Compression Test 8
   Penetration Test 9
   1.2 Meter (4 Foot) Drop Test 10
   Post-Test Inspection and Assessment 12
7. TP80 ACCIDENT DROP TESTS – TP80(A) 13
   9 Meter (30 Foot) Drop Test 13
   Puncture Test 14
   Post-Test Inspection and Assessment 14
8. TP80 ACCIDENT DROP TESTS – TP80(B) 15
   9 Meter (30 Foot) Drop Test 15
   Puncture Test 16
   Post-Test Inspection and Assessment 16
9. TP80 ACCIDENT DROP TESTS – TP80(C) 17
   9 Meter (30 Foot) Drop Test 17
   Puncture Test 18
   Post-Test Inspection and Assessment 18
10. TP80 THERMAL TEST – TP80(B) 19
   Orientation and Setup 19
   Test Chronology 20
   Post-Test Inspection and Assessment 21

APPENDICES

A. **CALIBRATION RECORDS**

B. **MANUFACTURING ROUTE CARDS AND PRE-TEST RADIATION PROFILE DATA SHEETS**

C. **TEST CHECKLISTS AND DATA SHEETS**

D. **TEST PHOTOGRAPHS**

1. PURPOSE

This report describes the Type B test results for the Model 650L source changer. These tests were performed in accordance with Test Plan 80 and were conducted March 15 through 20, 1999. The Test Plan specified testing necessary to demonstrate compliance with the requirements in 10 CFR Part 71 and IAEA Safety Series No. 6 (1985 as amended 1990) for "Normal Conditions of Transport" and "Hypothetical Accident Conditions." Evaluation of the compliance of the Model 650L with these requirements is provided in the Safety Analysis Report (SAR).

2. SCOPE OF TESTING

Test Plan 80 identified three orientations that could potentially cause the most significant damage to the Model 650L source changer in the 9 meter (30 foot) drop tests. Therefore, the test plan required three test specimens. Each of these test specimens was subjected to the tests described below.

1. Normal Conditions of Transport Tests per 10 CFR 71.71, including the following for each test specimen:

   a) Compression test, with the test specimen under a load greater than or equal to five times the Model 650L maximum weight for at least 24 hours.

   b) Penetration test, in which a 13.4 lb (6.08 kg) penetration bar is dropped from at least 1 meter (40 inches) onto the test specimen in the most vulnerable location.

   c) 1.2 meter (4 foot) drop test, in which the test specimen is dropped in an orientation expected to cause maximum damage.

   Water spray preconditioning of the test specimens prior to testing was not required in the test plan and is evaluated separately.

2. Hypothetical Accident Condition Tests per 10 CFR 71.73, including the following for each of the test specimens:

   a) 9 meter (30 foot) drop test, in which the test specimen is dropped in an orientation expected to cause maximum damage.

   b) Puncture test, in which the test specimen is dropped from at least 1 meter (40 inches) onto a 6 inch (152.4 mm) diameter vertical bar in an orientation expected to compound damage from the 9 meter (30 foot) drop test.

   c) Thermal test, in accordance with 10 CFR71.73(c)(4), in which the test specimen is exposed for 30 minutes to an environment which provides a time-averaged environmental temperature of at least 800°C (1472°F), and an emissivity coefficient of at least 0.9. For the Model 650L, the test plan specified that the thermal test would be performed for only one of the three test specimens, unless other test units suffered significant damage in the drop and puncture tests. This requirement was based on the evaluation of the construction of the unit, and on the potential failure modes, which are discussed in the following section.

   The crush test specified in 10 CFR 71.73(c)(2) was not required because the source capsules are qualified as Special-Form radioactive material.

   The water immersion test specified in 10 CFR 71.73(c)(6) and other tests specified in 10 CFR 71 are evaluated separately.

   For all tests, sufficient margin was included in test parameters to account for measurement uncertainty. These test parameters included test specimen weight, temperature, and drop height.

3. FAILURE MODES

For the Model 650L source changer, the key function important to safety is the positive retention of the radioactive source in its stored position within the depleted uranium shield. Displacement of either the source or the shield from the design position or failure of the shield could cause radiation from the package to increase above regulatory limits. Mechanisms, which could cause these modes of failure, include:

- Oxidation of the DU Shield - During the thermal test, oxidation of the DU shield could lead to reduced shielding effectiveness and higher radiation exposure. This could occur if failure of the inner and outer shells or failure of the through-bolts during drop testing results in a large, open path to the DU shield.

- Source Pull-Out from the Shield - During drop testing or during the thermal test, source pull-out could lead to higher radiation exposure. This could occur if there is significant relative displacement between the shield and the lock assembly on the top cover plate. Such displacement could occur if the top plate is deformed outward, and the shield moves laterally or downward through the polyurethane foam.

The drop orientations for the normal and hypothetical accident tests were selected to challenge the components that are intended to prevent these failures. For the 1.2 meter (4 foot) and 9 meter (30 foot) drop tests, these orientations include the following:

- Horizontal with the long side of the unit down - This orientation could cause movement of the shield or failure of the inner and/or outer shells.
- Vertical upside down - This orientation could cause deformation of the top plate, failure of the through-bolts, or failure of the lock assembly which would all lead to source pull-out from the shield. Additionally, movement of the shield through the foam in the upper part of the unit would put a large lateral load on the upper portion of the inner shell, which is subject to brittle failure.
- Top corner down - This orientation could cause failure of the bolts holding the protective lid in place, exposing the lock assembly to damage during the puncture test. This orientation also loads the through-bolts, top plate, and inner shell similar to the vertical upside down orientation.

Because of the potential for brittle failure of carbon steel components, all test units were packed in dry ice and cooled to less than -40°C (-40°F) (the minimum temperature required by IAEA Safety Series 6) for the penetration, 1.2 meter (4 foot) drop, 9 meter (30 foot) drop, and puncture tests.

In selecting test units for the thermal test, it was concluded that an undamaged unit would not be significantly affected by exposure to the conditions of the thermal test. In particular, for an undamaged unit, the depleted uranium shield would still be completely enclosed within the inner and outer shells and be supported by foam and a shim of either copper, steel, or lead. Under the thermal test conditions, degradation of the foam and melting of the shim, if it is lead, will allow

the shield to move by a small amount. This could result in limited movement of the source relative to the shield, but not enough to significantly increase radiation levels.

Therefore, the thermal test is only expected to have a significant effect on those units which sustained damage relating to the two modes of failure described above, specifically: (1) an opening in the inner and outer shells to allow oxidation of the shield, or (2) relative displacement of the lock assembly and shield which could be compounded by shield movement during the thermal test. Since relative displacement of the lock assembly was expected in the vertical upside down drop orientation, it was planned to perform the thermal test with the unit dropped in this orientation. The test plan required thermal tests of the other test specimens only if they sustained damage that could lead to failure during the thermal test.

4. TEST UNIT DESCRIPTION

The Model 650L test specimens, identified below, were originally constructed in accordance with drawing C65009 and were prepared for testing in accordance with drawing R-TP80, Rev. E. The manufacturing route cards for the units document the compliance of these units with the AEA Technology QSA Inc. QA program (see Appendix B).

Specimen	Serial No.	Total Weight	Lead Configuration
TP80(A)	2243	80.0 lb (36.3 kg)	No lead between DU shield and long side of inner shell.
TP80(B)	182	83.6 lb (37.9 kg)	Thickest lead under DU shield (total 3/8" thick).
TP80(C)	195	89.0 lb (40.4 kg)	Any location.

Important features of the test unit construction include the following:

- The configuration of lead added to each unit for supplemental shielding was specified as shown above to provide the worst case for the each drop orientation.
- For TP80(B), the original steel shim used in the unit was replaced with a solid 3/8" thick lead shim.
- The original carbon steel through-bolts were replaced with stainless steel bolts.
- The original carbon steel lid bolts were replaced with high strength, strain hardened stainless steel bolts.
- The weights of the test specimens are representative of the heaviest 650L units in use. The range of weights of 650L units is 75 lb to 90 lb (34.0 kg to 40.8 kg).

The test specimens were radiographed to document the lead configuration and the position of the internal components. Also, the position of the "dummy" source used in the units was measured prior to testing.

5. SUMMARY AND CONCLUSIONS

All test specimens met the requirements for 10 CFR 71 Type B(U) Transport Testing, as shown in the following table of Radiation Profile results.

Specimen	Specimen Surface	At Surface, Before Test	At One Meter, Before Test	At Surface, After 4 ft Drop Test	At One Meter, After 4 ft Drop Test	At One Meter, After Final Test (Notes 1,2)
	Reg. Limits	200 mR/hr	10 mR/hr	200 mR/hr	10 mR/hr	1000 mR/hr
TP80(A) S/N 2243	Top	84	3.2	94	2.4	2.7
	Right	47	0.6	47	0.7	0.8
	Front	88	0.7	89	0.8	1.0
	Left	56	0.6	65	0.7	0.7
	Rear	74	0.7	89	0.8	0.9
	Bottom	51	0.4	94	0.7	0.6
TP80(B) S/N 182	Top	60	3.1	71	2.0	28
	Right	56	0.4	53	0.6	5.6
	Front	84	0.8	83	0.8	5.6
	Left	88	0.6	83	0.6	7.9
	Rear	79	0.8	77	0.8	7.9
	Bottom	74	0.5	83	0.7	1.1
TP80(C) S/N 195	Top	72	2.2	59	2.0	2.2
	Right	105	0.7	71	0.7	0.9
	Front	50	0.6	47	0.5	0.6
	Left	127	0.7	106	0.8	1.0
	Rear	50	0.6	53	0.6	0.6
	Bottom	61	0.6	59	0.5	0.5

Notes:

1. The final Hypothetical Accident Condition test for test specimens TP80(A) and TP80(C) was the Puncture Test. The final test for specimen TP80(B) was the Thermal Test.
2. Radiation profile at the surface is not required for the Hypothetical Accident Condition test (see 10 CFR 71.51(a)(2)).

Results of each test are summarized in the table below, in the sequence in which the tests were completed. Detailed results are provided in the following sections of this report, test data sheets are in Appendix C, and photographs are included in Appendix D.

Specimen	Test Performed	Test Results (Note 1)
TP80(A)	Compression Test	No damage
	1 meter (40 inch) penetration bar on side	Impact mark; no visible damage
	1.2 meter (4 foot) drop, horizontal on long side	• Impact mark on edge of plates • Small change in radiation profile
	9 meter (30 foot) drop, horizontal on long side	Bent bottom plate flange inward
	1 meter (40 inch) puncture, horizontal on long side (dropped twice to ensure specimen temperature was below-40°C (-40°F))	Shallow dent on outer shell at impact point
	Post-Drop Inspection	• Lid secured in place • Locks undamaged; source secured • No significant change in source position • Small change in radiation profile
TP80(B)	Compression Test	No damage
	1 meter (40 inch) penetration bar on side	Impact mark; no visible damage
	1.2 meter (4 foot) drop, vertical upside down	• Impact mark on top of lid • Small change in radiation profile
	9 meter (30 foot) drop, vertical upside down	• Outer shell split open from top to bottom • Inner shell cracked, creating a 3 inch (76.2 mm) high by 0.5 inch (12.7 mm) wide opening • Small upward deflection of top plate • Top and bottom plates remained secured by the through bolts.
	1 meter (40 inch) puncture on crack in shell	Bent shell inward slightly in area of crack

Specimen	Test Performed	Test Results (Note 1)
TP80(B) (con't)	Post-Drop Inspection	• Lid secured in place • Locks undamaged; source secured • Top plate deflection at center about 0.16 inch (4.1 mm). • No damage to through bolts • No significant change in source position. • Outer and inner shells cracked; opening about 3 inch (76.2 mm) by 0.5 inch (12.7 mm).
	Thermal test	• Some oxidation of DU shield near crack in shell • Shield moved down (as expected) • Polyurethane foam burned off, exposing the shield • Some oxidation of shield near crack in shell • Shield self-extinguished after removal from oven • Source pullout less than 0.5 inch (12.7 mm). • Max. radiation level at one meter was 28 mR/hr (which is much less than 1000mR/hr allowable)
TP80(C)	Compression Test	No damage
	1 meter (40 inch) penetration bar on side	Impact mark; no visible damage
	1.2 meter (4 foot) drop on top edge of lid	• Bent corner of lid and cracked top plate of lid (brittle failure) • Small change in radiation profile
	9 meter (30 foot) drop on top edge of lid	• Increased lid top plate crack length in vicinity of impact point • Locks still protected by lid
	1 meter (40 inch) puncture vertical upside down on lid and on underside of top plate	Broke inside of lid top plate (locks still protected)
	Post-Drop Inspection	• Locks undamaged; source secured • No significant change in source position • Small change in radiation profile

Note 1: None of the new stainless steel bolts installed in the test specimens failed.

Specimen TP80(A) was not significantly damaged in the testing. On specimen TP80(C), the top plate of the protective lid was substantially cracked and portions broke away; however, the rectangular tube section which surrounds the locks was undamaged and still attached to the lower portion which in turn was secured to the body of the changer. As such, the locks remained protected. The post-test radiation profiles showed a slight increase in radiation levels for these units, but these radiation levels were well below the allowable values.

The only significant damage to any unit was the cracked shell in specimen TP80(B). Because of this crack, the depleted uranium shield was exposed to air during the thermal test, and portions of the shield near the crack opening were oxidized. In addition, after the lead shim melted, the shield was free to move downward, pulling the dummy source out of its fully inserted position in the shield. However, even with the oxidized shield and source pull-out, the post-test radiation profile showed a maximum radiation level of 28 mR/hr at one meter. This is well below the maximum allowable level of 1,000 mR/hr at one meter following the hypothetical accident conditions.

6. TP80 NORMAL TESTS

Compression Test

All three test specimens were loaded as shown in the figure below. Lead weights were placed on a steel plate, which was positioned on top of each test specimen.

The vertical projected area of the unit is 8.25 inch (209 mm) x 10 inch (254 mm) or 82.5 square inches (531 square centimeters), yielding a total load of 165 lb (74.8 kg) for an applied pressure of 2 psi. Since the maximum weight of the Model 650L source changer is 90 lb (40.8 kg), a load of 5 times the weight, or 450 lb (204 kg), is more conservative. The total compressive load actually used was 458 lb to 462 lb (208 kg to 210 kg).

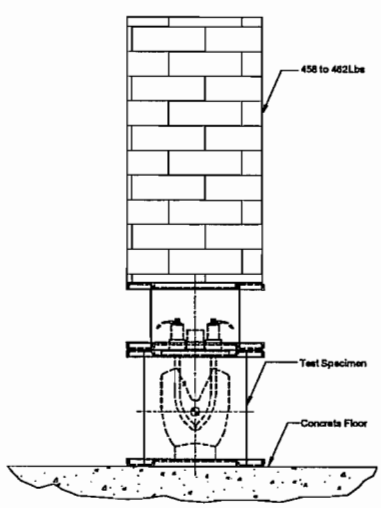

Compression Test Orientation – All Specimens

After a period of 24 hours, the weights were removed. No visible deformation or buckling occurred and no other damage was observed for any of the test specimens.

Penetration Test

The three test specimens were subjected to the penetration test. Temperature readings taken just before the test are summarized below.

Specimen	Ambient	Surface	Internal
TP80(A)	10°C (50°F)	-96°C (-141°F)	-95°C (-139°F)
TP80(B)	9°C (48°F)	-93°C (-135°F)	-83°C (-117°F)
TP80(C)	10°C (50°F)	-90°C (-130°F)	-90°C (-130°F)

The penetration bar target was the side of the unit in an attempt to damage the shell. For this test, each specimen was positioned with its horizontal long side down, as shown below.

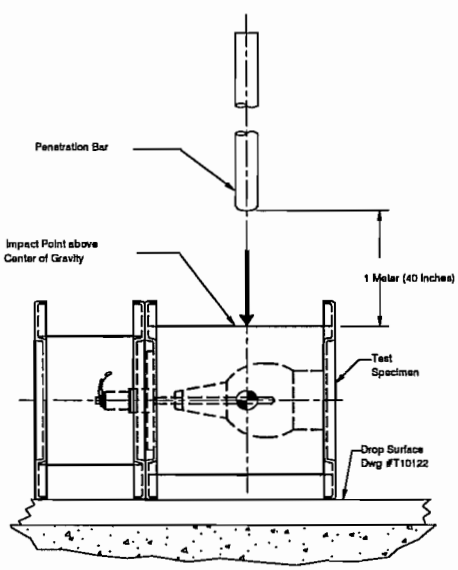

Penetration Test Orientation – All Specimens

The penetration bar was dropped from a height of at least 1 meter (40 inches) above the impact point. The bar hit as intended on each package, leaving a visible impact mark, but no other damage.

1.2 Meter (4 Foot) Drop Test

The three test specimens were then subjected to the 1.2 meter (4 foot) drop test. Temperature readings taken just before the test are summarized below.

Specimen	Ambient	Surface	Internal
TP80(A)	13°C (55°F)	-92°C (134°F)	-90°C (-130°F)
TP80(B)	13°C (55°F)	-87°C (-125°F)	-89°C (-128°F)
TP80(C)	13°C (55°F)	-95°C (-139°F)	-92°C (-134°F)

The drop orientations for each unit are shown below and on the next page. These orientations are the same as those used for each specimen in the 9 meter (30 foot) drop tests.

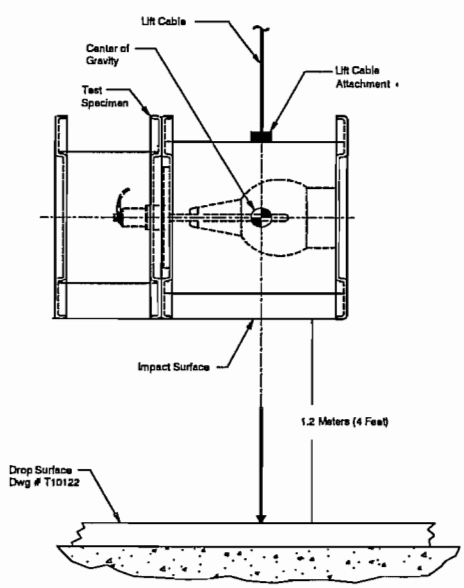

1.2 Meter (4 Foot) Drop Orientation for Specimen TP80(A)

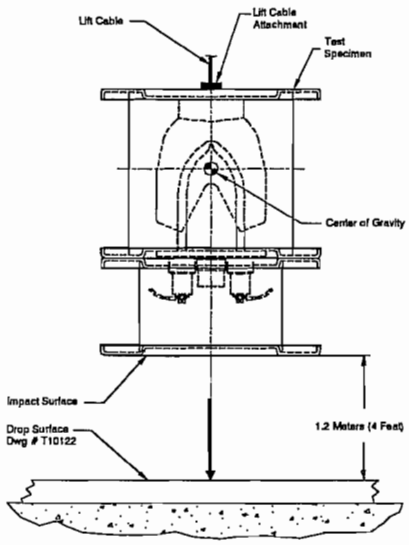

1.2 Meter (4 Foot) Drop Orientation for Specimen TP80(B)

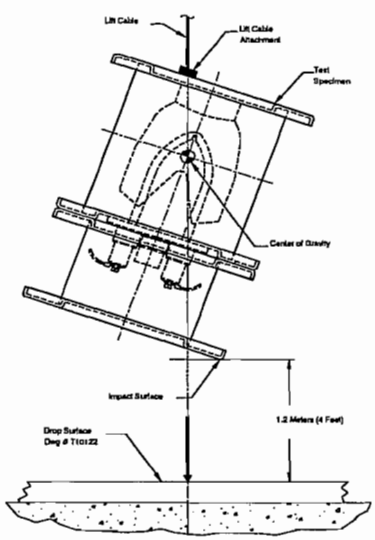

1.2 Meter (4 Foot) Drop Orientation for Specimen TP80(C)

Each test specimen impacted as intended. Visual inspections showed impact marks but no significant damage to either TP80(A) or TP80(B). For TP80(C), a 2 inch (50.8 mm) long crack in the top of the protective lid was observed, and the flange corner was bent.

Post-Test Inspection and Assessment

Results of the first intermediate inspections and assessments are summarized below. The radiation profile of each specimen was measured, and data sheets are provided in Appendices B and C.

Specimen	Damage	Source Movement	Radiation Profile (Note 1)
TP80(A)	No visible damage, locks functional	No significant change observed	Largest change at bottom surface: 51mR/hr to 94 mR/hr (Note 2)
TP80(B)	No visible damage, locks functional	No significant change observed	Largest change at top surface: 60 mR/hr to 71 mR/hr
TP80(C)	Cracked top lid, locks functional	No significant change observed	Largest change at rear surface: 50 mR/hr to 53 mR/hr

Note 1: Radiation levels at one meter were 2.4 mR/hr or less after Normal Condition Tests.

Note 2: All other surfaces measured remained essentially the same, exhibiting no corresponding shift in radiation levels. Additionally, no source movement was measured. Therefore, this change was considered insignificant.

7. TP80 ACCIDENT DROP TESTS – TP80(A)

Specimen TP80(A) was subjected to a 9 meter (30 foot) drop test and a puncture test in accordance with Test Plan 80. The results are described below.

9 Meter (30 Foot) Drop Test

Just before the drop test, thermocouple readings for Specimen TP80(A) were as follows:

- Internal (source tube): -93°C (-135°F)
- Surface (shell): -92°C (-134°F)

The orientation for Specimen TP80(A), shown below, was the same as for the 1.2 meter (4 foot) drop. The intention was to cause the shield to move relative to the lock assembly and/or to cause failure of the inner and outer shells.

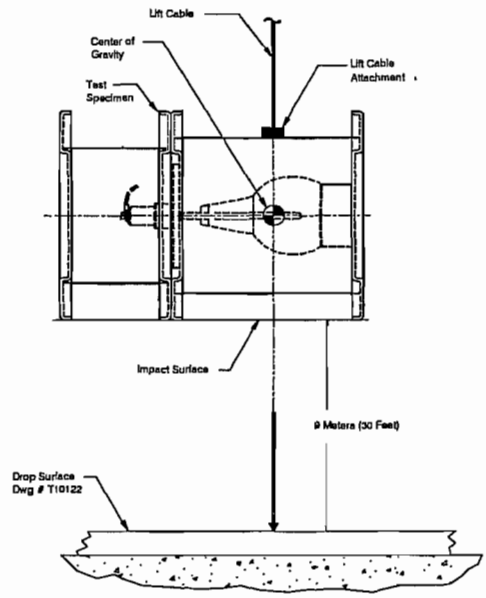

9 Meter (30 Foot) Drop Orientation for Specimen TP80(A)

The package rotated very slightly causing the edge of the bottom plate to impact first. However, the impact was sufficiently close to ideal as to impart the desired force into the package. Visual inspections showed that the edge of the bottom plate had bent inward to the point where it contacted and dented the outer shell. The edge of the top plate of the lid also bent inward slightly.

Puncture Test

For the puncture test, TP80(A) was dropped, as planned, on its side with the center of gravity over the impact area, as shown below. The intention of this orientation was to inflict further damage to the shell. The thermocouple reading on the surface of the unit before the puncture test was -69°C (-92°F) but warmed to -26°C (-15°F) just after the test due to delays in rigging the unit for the drop. Consequently, the unit was cooled again and dropped a second time. For the second test, the surface temperature was -46°C (-51°F) before the test and -42°C (-44°F) after the test.

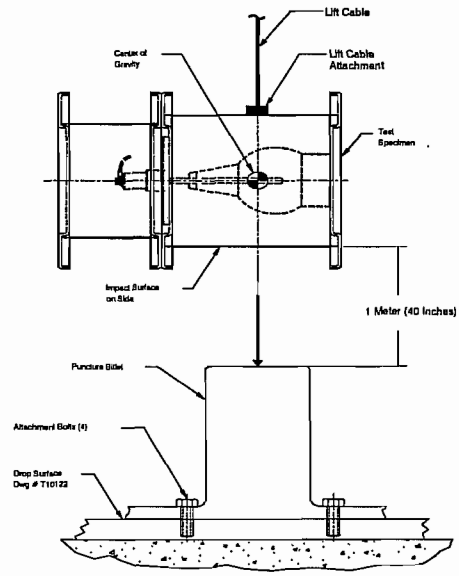

Puncture Drop Orientation for Specimen TP80(A)

For both drops, the unit impacted on its side as intended. Each impact caused the side of the shell to deform inward slightly, but no significant damage was observed.

Post-Test Inspection and Assessment

Following the test, the protective lid was removed and the unit was inspected. No damage to the lock assembly was observed, and no significant source movement was measured. Radiographs of the unit showed no discernable change in the position of the shield. The post-test radiation profile showed no significant change in radiation levels from the pre-test profile (see Appendices B and C). Because no significant damage occurred to the unit, the thermal test was not considered necessary (see Section 3). In addition, Specimen TP80(B) was considered worst case.

8. TP80 ACCIDENT DROP TESTS – TP80(B)

Specimen TP80(B) was subjected to a 9 meter (30 foot) drop test and a puncture test in accordance with Test Plan 80. The results are described below.

9 Meter (30 Foot) Drop Test

Just before the drop test, thermocouple readings for Specimen TP80(B) were as follows:

- Internal (source tube): -94°C (-137°F)
- Surface (shell): -93°C (-135°F)

The package orientation for Specimen TP80(B), shown below, was the same as for the 1.2 meter (4 foot) drop. The intention was to cause deformation of the top plate, failure of the through-bolts, and failure of the lock assembly, leading to source pull-out from the shield.

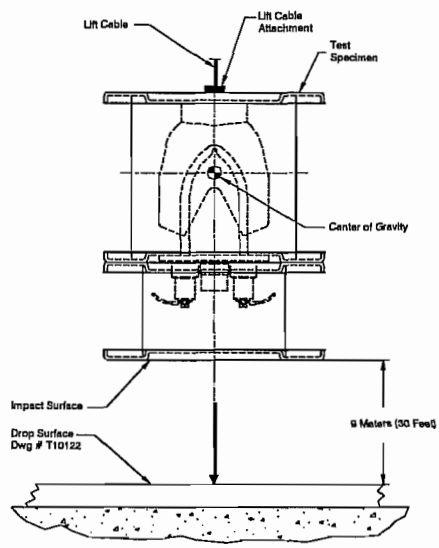

9 Meter (30 Foot) Drop Orientation for Specimen TP80(B)

The package impacted as intended. The impact caused the depleted uranium shield to move into the foam below the top plate, putting a large lateral load on the inner shell, and causing the shell to crack. The cracking of the inner shell resulted in a transfer of the lateral load to the outer shell, breaking the spot welds that hold the outer shell together. The outer stainless steel wrap also failed and sprung open. One of the rivnuts in the top plate broke, but its associated bolt and the all the other lid bolts were undamaged and the lid remained secured to the package.

Puncture Test

For the puncture test, the planned orientation was changed in order to inflict the greatest damage, based on the on-site assessment of Engineering, Regulatory and QA. As such, TP80(B) was dropped so that the cracked shell was aligned with the top edge of the puncture bar. The intention was to open up the crack or cause additional cracking in the damaged area. The thermocouple reading on the outside surface of the unit was -57°C (-71°F) before the puncture test and -44°C (-47°F) after the test.

The unit impacted directly on the crack. The outer shell was deformed inward at the impact area, but additional cracking was not observed.

Post-Test Inspection and Assessment

Following the test the protective lid was removed and the unit was inspected. The through-bolts were all intact. One of the locks had broken out, but the dummy source remained securely retained (i.e., the lock slide was still secure). The top plate (with the lock assembly) deflected outward by about 0.16 inch (4.1 mm). The resulting source pull-out was measured to be 0.027 inch (0.69 mm) in one side and 0.064 inch (1.6 mm) in the other side. Radiographs showed the crack in the inner shell extended from the top plate to the bottom plate.

9. TP80 ACCIDENT DROP TESTS – TP80(C)

Specimen TP80(C) was subjected to a 9 meter (30 foot) drop test and a puncture test in accordance with Test Plan 80 and results are described below.

9 meter (30 Foot) Drop Test

Just before the drop test, thermocouple readings for Specimen TP80(C) were as follows:

- Internal (source tube): -97°C (-143°F)
- Surface (shell): -98°C (-144°F)

The package orientation for Specimen TP80(C), shown below, was the same as for the 1.2 meter (4 foot) drop. The intention was to fail the bolts holding the protective lid to the rest of the unit. This would expose the lock assembly to further damage during the puncture test.

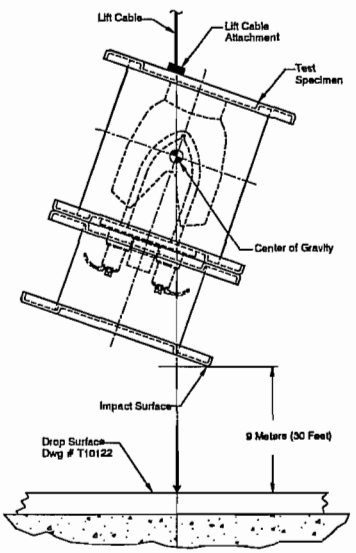

9 Meter (30 Foot) Drop Orientation for Specimen TP80(C)

The package impacted as intended. Visual inspections showed that none of the lid bolts failed, but the lid crack initiated in the 1.2 meter (4 foot) drop increased in both directions. The crack went around the top plate at its interface with the rectangular tube section that protects the locks. The crack went about halfway around the lid, and the top plate was deflected downward about 0.5 inch (13 mm). Portions of the top plate flange also broke off.

Puncture Test

Specimen TP80(C) was subjected to two puncture tests. An additional puncture drop was added as two possible orientations were deemed "worst case". In the first test, the unit was dropped vertically upside down, with the intention of breaking through the lid and damaging the locks. The thermocouple reading on the surface of the unit was -53°C (-63°F) before the puncture test and -50°C (-58°F) after the test.

For the second test, the unit was dropped such that the impact was on the underside of the top plate, as shown below. The objective of this drop was to damage the rivnuts, which hold the lid to the top plate, and to pry the top plate off of the unit by overloading the through-bolts. The initial surface temperature was -47°C (-53°F).

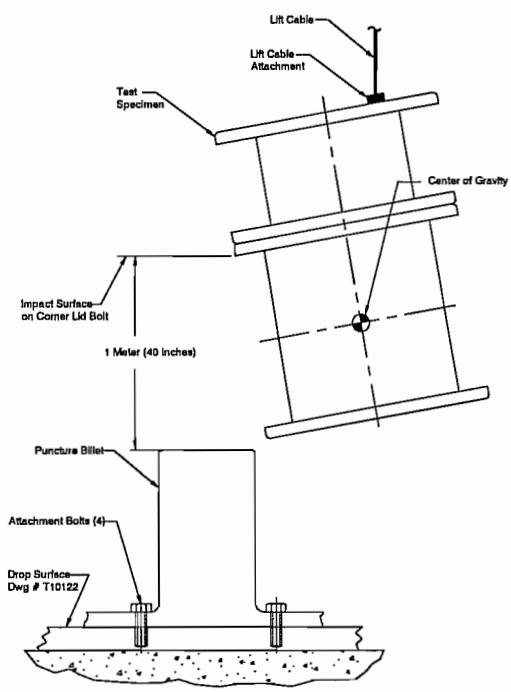

Second Puncture Drop Orientation for Specimen TP80(C)

The unit impacted as intended in both drops. In the first drop, the top of the lid was damaged further, however, the lid remained intact and the puncture bar did not impact the lock assembly. In the second drop, the top plate deformed slightly, but no significant damage was observed.

Post-Test Inspection and Assessment

Following the test, the protective lid was removed and the unit was inspected. No damage to the locks was observed and no significant movement of the source was measured. The post-test radiation profile showed no significant change in radiation levels from the pre-test profile (see Appendix B). Because no significant damage occurred to the unit, the thermal test was not considered necessary (see Section 3). In addition, Specimen TP80(B) was considered worst case.

10. TP80 THERMAL TEST – TP80(B)

Based on the results of the drop tests, a thermal test was performed with specimen TP80(B). The damage to this unit was such that the maximum source pull-out, as well as oxidation of the depleted uranium shield, could occur during the thermal test. The thermal test was not considered necessary for the other test specimens since the results are bounded by those for TP80(B).

Orientation and Setup

Based on the damage observed in the drop tests, it was concluded that worst orientation for the thermal test was to have the unit at an angle such that the center of gravity of the shield was over the bottom corner edge of the inner shell. The cracked side of the unit was oriented downward, so that the shield would move toward the crack as the lead shim melted and the shield dropped down. The worst case angle was determined to be 53° based on the internal geometry of the unit. This would allow the maximum amount of shield movement relative to the top plate, pulling the source out of position. To hold the specimen in this orientation, a steel jig was constructed as shown below.

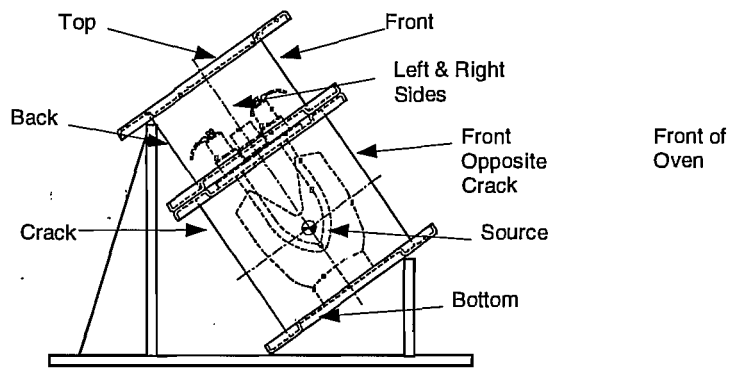

TP80(B) Orientation and Thermocouple Locations

Seven thermocouples were attached to the specimen on the top, bottom, and four side surfaces (two thermocouples on the front side). An eighth thermocouple was inserted into one of the source tubes to measure the internal temperature. A ninth thermocouple was used to measure the ambient oven temperature.

To allow for combustion during the thermal test, the oven door was blocked open with a gap of 1 inch (25.4 mm) at the top and bottom of the door, permitting airflow into the oven while allowing the oven to maintain its temperature. Since the oven door is 36 inches (914 mm) long, each opening was approximately 36 square inches (232 square centimeters).

Test Chronology

Temperatures were recorded from the time the specimen was inserted in the oven until after it had cooled and was moved to a temporary storage area. The total duration of this period was about 1,000 minutes (16 hours). Plots of the temperature data are included in Appendix C. The overall test chronology is as follows:

- Zero to 32 minutes – heat up of the specimen from ambient to over 810°C (1490°F). The 30 minute test started when all surfaces of the specimen exceeded 810°C (1490°F). The thermocouple on the bottom of the unit was the last to reach the target temperature, and the test was started when it reached 813°C (1495°F).

- 32 to 64 minutes – 30 minute test period, with all temperatures maintained above 810°C (1490°F). The maximum temperature was 996°C (1825°F) on the side of the unit facing the rear of the oven, while the minimum temperature was 813°C (1495°F) on the bottom of the unit. The initial and final temperatures of all thermocouples over the 30 minute period are shown below. Flames due to combustion of the foam were observed, however these diminished and stopped before the end of the 30 minute test.

Location	Initial Temp.	Final Temp.	Average Temp.
Bottom	813°C (1495°F)	861°C (1582°F)	872°C (1602°F)
Top	980°C (1796°F)	879°C (1614°F)	913°C (1675°F)
(Lid) Front Oven	934°C (1713°F)	848°C (1558°F)	879°C (1614°F)
(Lid) Back Oven	995°C (1823°F)	884°C (1623°F)	923°C (1693°F)
(Lid) Left Side	949°C (1740°F)	865°C (1589°F)	899°C (1650°F)
(Lid) Right Side	979°C (1794°F)	872°C (1602°F)	909°C (1668°F)
Side (Opposite Crack)	830°C (1526°F)	810°C (1490°F)	823°C (1513°F)
Source Tube	906°C (1663°F)	865°C (1589°F)	886°C (1627°F)
Oven/Ambient	940°C (1724°F)	839°C (1542°F)	877°C (1611°F)

- 64 minutes – removal from oven. The depleted uranium shield was visible, with a slightly red glow in areas. Some depleted uranium oxide (black power) was observed coming out of the crack and onto the surface below, indicating the shield was oxidizing.

- 64 to 700 minutes – cool down to below 100°C (212°F). During this time, the shield was allowed to self-extinguish.

During the cool down period, the unit was allowed to cool via natural convection with no additional heat input. The hypothetical accident conditions specified in the IAEA Safety Series 6 regulations include a requirement to account for heat input due to insolation during the cool down period. This heat input could reduce the cool down rate. However, the reduction was not considered to have any effect on the damage sustained by the test specimen, particularly compared with the 30 minute exposure to 810°C (1490°F) in the oven.

Post-Test Inspection and Assessment

The initial on-site assessment of the test specimen included the following observations:

- A cracked piece of the inner shell was dislodged and had dropped out of position.
- Most paint had vaporized. Radiation labels were still legible.
- All the foam had burned off, leaving a small amount of carbon char.
- The lead shielding and shim melted and some lead had dripped out the bottom of the unit.
- Radiography showed the shield moved laterally and downward as expected. The resulting source pull-out was measured to be 0.436 inch (11.1 mm) on one side and 0.480 inch (12.2 mm) on the other side.
- The lock assemblies were functional; however, the source tubes had completely pulled out of the top plate and had shifted laterally. This caused an interference between the source wire and the top plate, and required that the top plate be machined to enlarge the holes before the unit could be profiled.

After the thermal test, visual observations indicated that the shield had come to rest on the through bolts and bottom plate. However, to securely fix the shield in position for shipping and extensive handling, holes were drilled in the shell of the unit so that foam could be poured in, and the shield was foamed in place. A radiation profile was then done on site with the source located to replicate the amount of observed source pull-out. The highest radiation measurement was 28 mR/hr at one meter (when scaled to the 240 Ci licensed capacity of the unit) at the top of the unit. The small amount of shield oxidation experienced in the test had a minimal effect on the overall effectiveness of the shielding.

APPENDIX A

CALIBRATION RECORDS

METTLER TOLEDO

SCALE CALIBRATION RECORD

Date: 11-16-98

SCALE LOCATION Shipping + Rec.
MANUFACTURER FAIRBANKS
MODEL NUMBER Port Beam
CAPACITY 2000 X 1/2
TEST PROCEDURE HB44

TAG NO. ASSY II
SERIAL NUMBER L482397
DIVISIONS 4000
CSWA#

TEST PROCEDURE REFERENCE: METTLER TOLEDO MANUAL FOR CALIBRATIONS SERVICES, HANDBOOK 44 FIELD MANUAL

Shift Test	Weights Applied	Scale Reading	Error (+/-)	Scale Reading After Adjustment		
Position 1	500 lb	501 lb	+1 lb		Acc.	Rej.
Position 2	500	500	0		Acc.	Rej.
Position 3	500	500 1/2	+1/2		Acc.	Rej.
Position 4	500	500 1/2	+1/2		Acc.	Rej.

Test Load	Weights Applied	Scale Reading	Error (+/-)	Scale Reading After Adjustment		
Zero Balance	0 lb	0 lb	0 lb		Acc.	Rej.
	500	500 1/2	+1/2		Acc.	Rej.
	1000	999 1/2	-1/2		Acc.	Rej.
	1500	1501	+1		Acc.	Rej.
Maximum Test Load	2000	1998	-2		Acc.	Rej.
					Acc.	Rej.
	1000		-1/2		Acc.	Rej.
					Acc.	Rej.
Zero Balance	0		0		Acc.	Rej.

TEST WEIGHT ID NUMBERS: 01 thru 28

COMMENTS/ACTIONS:

CUSTOMERS SIGNATURE (FOR OFF TOLERANCE):

TECHNICIANS SIGNATURE: J. Draper + B. Clarke

TEKSERV

DG 8 OCT 98

127 Riverneck Road
Chelmsford, MA 01824
Telephone: 978 - 459-9480
FAX # 978 - 453-6336
WEB SITE: http://www.tekserv.com

CALIBRATION REPORT

NQA ISO9002 REGISTERED COMPANY — ACCREDITED REGISTRAR ANSI-RAB — Certificate No. 10154

NQA ISO9002 REGISTERED COMPANY — NATIONAL ACCREDITATION OF CERTIFICATION BODIES — BS EN ISO 9002 Certificate No. 8229

SERVICE NUMBER:	SN-0226210
CONTRACT NUMBER:	SENTINEL

A59847

AEA TECHNOLOGIES
40 NORTH AVENUE

BURLINGTON MA 01803

DATE RECEIVED	CUSTOMER P.O.	ASSET NUMBER
10/08/98	2887	ENG-12

MANUFACTURER	MODEL	SERIAL NUMBER
OMEGA	HH-21	T-179139

DESCRIPTION: THERMOMETER

TEMP.	HUMIDITY	PRIOR CAL	CAL CYCLE	DATE OF TEST	NEXT TEST DUE
23.00°C	30.00%	9/25/97	12 MO	10/08/98	10/08/99

WORK REQUESTED	SERVICES RENDERED	REMARKS
CALIBRATE/CERTIFY	CALIBRATED/CERTIFIED	IN TOLERANCE AS RCV'D

PROCEDURE USED	N.I.S.T. TEST NUMBER	TECHNICIAN
MANUFACTURER'S	413348-433349-259071-LRAN	POULIN

ALIBRATION CHECKED TO: MANUFACTURER'S SPECIFICATIONS ADJUSTED TO: MANUFACTURER'S SPECIFICATIONS

MANUFACTURER	MODEL	SERIAL	ACCURACY	DATE CALIBRATED
ANALOGIC	AN6520	8904010	MFG.	7/03/98

:KSERV CERTIFIES THAT ALL CALIBRATION EQUIPMENT USED IN THE TEST IS TRACEABLE TO N.I.S.T. AND THE TEST WAS :RFORMED IN ACCORDANCE WITH MIL-STD-45662A, ISO9002, ɔ-10012-1, ANSI/NCSL-Z540-1-1994.

CERTIFIED BY

IN TOLERANCE AS RECEIVED

TEKSERV
CALIBRATION DATA

OMEGA Model HH-21
Serial Number: T 179139
Date of test: 10-8-98
Prior Cal: 9-25-97
Technician: M. P.

Data as Received ✓
Data After Adjustment
Data After Repair
Asset Number: ENG-12

Range	Reading	Specification
Deg.C Type J		
- 100.0	-99.6	+/-{0.1%rdg+0.5'C}
0.0	0.3	"
100.0	100.3	"
500.0	500.0	"
Deg.F Type J		
- 100.0	-99.3	+/-{0.1%rdg+1.0'F}
32.0	32.6	"
200.0	200.5	"
650.0	650.4	"
1200.0	1199.9	"
Deg.C Type K		
- 100.0	-99.5	+/-{0.1%RDG+0.5'C}
0.0	0.4	"
100.0	100.4	"
600.0	599.9	"
1000.0	1000.2	"
Deg.F Type K		
- 100.0	-99.1	+/-{0.1%rdg+1.0'F}
32.0	32.8	"
200.0	200.7	"
600.0	600.4	"
1600.0	1600.5	"
Deg.C Type T		
- 100.0	-99.5	+/-{0.1%rdg+0.5'C}
0.0	0.3	"
100.0	100.2	"
350.0	350.1	"
Deg.F Type T		
- 100.0	-99.4	+/-{0.1%rdg+1.0'F}
32.0	32.5	"
100.0	100.3	"
500.0	500.3	"

ESTABLISHED IN 1972

HUNT METROLOGY SERVICE, INC.
175 JACKSON ST. METHUEN, MA. 01844-5042
PHONE: (978) 688-7278 FAX: (978) 794-4632

CALIBRATION CERTIFICATE

Company Name: **SENTINEL**
Address: **40 NORTH AVENUE**
BURLINGTON, MA. 01803

Calibration No: **HMSCC-08487**
Dated: **APR 1-2, 1998**
Pages: **28**

Department:

Phone No.: **(781) 272-2000** Ext:
Attention: **DAVE ANNIS**
P.O. No.:
Technician: **PAUL RABS**

Fax No: **(781) 273-2216**

The calibration performed on the following measuring and test equipment (M&TE) of this document are traceable to the National Institute of Standards and Technology (N.I.S.T.) through N.I.S.T. test number 821/256504-96; Dated February 26, 1997 for dimensional calibration, and/or through N.I.S.T. test number 822/254480 dated February 26, 1997 for mass calibration.

The M&TE have been cleaned and lubricated, as needed. Our technician(s) have calibrated, adjusted and/or reset the M&TE, affixed a calibration label to the M&TE, updated the corresponding record(s), and provided this calibration certificate.

The standard(s) utilized to perform the calibration have been calibrated, certified and maintained in our laboratory which sustains a temperature of 68 degrees (+/- 2 degrees F.) and less than 50% relative humidity. All records pertaining to our standards, and the masters utilized to calibrate them, are kept on file in our laboratory for a period of no less than 3 years.

The services provided, traceability to the N.I.S.T., and Hunt Metrology Service's calibration system comply with the requirements of ANSI/NCSL Z540-1-1994 and ISO 10012-1:1994(E).

The reported value is both "as found" and "as left" data, unless otherwise specified. A calibration uncertainty ratio of at least 4:1 is maintained unless otherwise stated.

This calibration certificate cannot, in any way, be reproduced, except in full, without prior written consent from a representative of Hunt Metrology Service, Inc.

Keith R. Young
Technical Manager

Customer: AMERSHAM CORPORATION - SENTINEL DIVISION P.O. No.:

ID.No.: 183 Manufacturer: CHATILLON Date Cal: 04/01/98
2 ID.No.: Serial No.: 17938 Date Due: 04/01/99
Department: QC Model No.: DPP-10 Technician: PR
Deviation u.: Standard No.: 018 Cal.: 03/06/98 Cal. Proc. No: 22 Due: 03/31/99
Accuracy: +/-1% OF FS Standard No.: Cal.: Due:
Accuracy: Standard No.: Cal.: Due:
Standard No.: Cal.: Due:
Gage Type: 10 lb FORCE GAGE

Required:	1	2	4	6	8	10 lb
Deviation:	0	0	0	0	0	0 lb
Measured:	1.0	2.0	4.0	6.0	8.0	10.0 lb

Customer: AMERSHAM CORPORATION - SENTINEL DIVISION P.O. No.:

ID.No.: 186 Manufacturer: CHATILLON Date Cal: 04/01/98
2 ID.No.: Serial No.: 19108 Date Due: 04/01/99
Department: RI LAB Model No.: DPP-10 Technician: PR
Deviation u.: Standard No.: 018 Cal.: 03/06/98 Cal. Proc. No: 22 Due: 08/31/98
Accuracy: +/-1% OF FS Standard No.: Cal.: Due:
Accuracy: Standard No.: Cal.: Due:
Standard No.: Cal.: Due:
Gage Type: 10 lb FORCE GAGE

Required:	1	2	4	6	8	10 lb
Deviation:	0	0	0	0	0	0 lb
Measured:	1.0	2.0	4.0	6.0	8.0	10.0 lb

Customer: AMERSHAM CORPORATION - SENTINEL DIVISION P.O. No.:

ID.No.: 236 (1) Manufacturer: MITUTOYO Date Cal: 04/01/98
2 ID.No.: Serial No.: 314390 Date Due: 04/01/99
Department: QC Model No.: Technician: PR
Deviation u.: Standard No.: 026 Cal.: 02/04/98 Cal. Proc. No: 16 Due: 08/31/98
Accuracy: +/-0.0010"/12" Standard No.: 088 Cal.: 02/04/98 Due: 02/28/99
Accuracy: Standard No.: 137 Cal.: 02/02/98 Due: 02/28/99
Standard No.: Cal.: Due:
Gage Type: 0-18" VERNIER PART 1 OF 2

Required:	0	PARA	ID	OD	1.0	2.0	4.0
Deviation:	REF	.001	0		0	0	0
Measured:	REF	.001	1.0000		1.0000	2.0000	4.0000

Customer: AMERSHAM CORPORATION - SENTINEL DIVISION P.O. No.:

ID.No.: 236 (2) Manufacturer: MITUTOYO Date Cal: 04/01/98
2 ID.No.: Serial No.: 314390 Date Due: 04/01/99
Department: QC Model No.: Technician: PR
Deviation u.: Standard No.: 026 Cal.: 02/04/98 Cal. Proc. No: 16 Due: 08/31/98
Accuracy: +/-0.0010"/12" Standard No.: 088 Cal.: 02/02/98 Due: 02/28/99
Accuracy: Standard No.: 137 Cal.: 02/02/98 Due: 02/28/99
Standard No.: Cal.: Due:
Gage Type: 0-18" VERNIER PART 2 OF 2

Required:	6.0	8.0	10.0	12.0	18.0
Deviation:	0	0	0	0	0
Measured:	6.0000	8.0000	10.0000	12.0000	18.0000

INSPECTION INSTRUCTION AND RECORD

T10129 | REV: B | VENDOR: PERIODIC MAINTENANCE | Page 1 of 1

DESCRIPTION: PENETRATION TEST BAR | CM - NA

CHARACTERISTICS	TOLERANCE	AQL	1	2	3	4	5	6	7	8	9	10	11	12
GENERAL VISUAL	N/A	C/100%	0/1	0/1										
VERIFY WEIGHT	13/13.5 lbs	C/100%	0/1	0/1										

ORIGINATOR / DATE: Dave Quinn 2 SEPT 97	~~P.O. / W.O.~~ FREQ. DAYS	365	—											
ENGINEERING APPROVAL / DATE: N/A	~~RECEIVING RECORD #~~ DUE DATE	2 Sep 98	2 Sep 99											
REGULATORY APPROVAL / DATE: N/A	LOT / SERIAL NO.	01	01											
Q A APPROVAL / DATE: 3 Sep 97	LOT QTY.	1	1											
COMMENTS:	QTY REJ / NCR NO.	0 / NA	0 / NA											
	QTY ACC.	1	1											
	INSP / DATE	Dw / 2 Sep 97	Da / 2 Sep 98											

INSPECTION INSTRUCTION AND RECORD

PART/DWG. NO.: T10122

REV.: B

VENDOR: PERIODIC MAINTENANCE

DESCRIPTION: DROP TEST SURFACE

CM - NA

CHARACTERISTICS	TOLERANCE	AQL	1	2	3	4	5	6	7	8	9	10	11	12
GENERAL VISUAL SURFACE SECURE & NOT DAMAGED	N/A	C/100%	0/1											
REMOVE 4 ½-13 SCREWS LUBRICATE AND REINSTALL	N/A	C/100%	0/1											

ORIGINATOR Dave Annis	DATE 29 SEPT 97	~~P.O. / W.O.~~ DAYS, FREQ	365
ENGINEERING APPROVAL N/A	DATE	~~RECEIVING RECORD #~~ DATE DUE	25 SEPT 98
REGULATORY APPROVAL N/A	DATE	LOT / SERIAL NO.	01
Q A APPROVAL KMAffl	DATE 29Sep97	LOT QTY.	1
COMMENTS:		QTY REJ / NCR NO.	0 / N/A
		QTY ACC.	1
		INSP / DATE	DW / 25 SEPT 97

Simpson Gumpertz & Heger Inc.

Consulting Engineers
Arlington, MA
San Francisco, CA

297 Broadway
Arlington, MA
02174-5310

Telephone:
617 643 2000
Fax:
617 643 2009

9 June 1997

Sentinel Amersham Corporation
40 North Avenue
Burlington, Massachusetts 01803

Attention: Steven J. Grenier

Tel: 617-272-2000
Fax: 617-273-2216

Comm. 97276 – Test Foundation Study, Sentinel Amersham Test Site, Groveland, MA

Gentlemen:

At your request we studied a test foundation located on the property of Valley Tree Service, Inc. at 1210 Salem Street, Groveland, Massachusetts. The purpose of our study was to determine if the test foundation provides an essentially unyielding horizontal surface for purposes of a drop test.

Scope

The scope of our study included: visiting the site to examine the foundation; reviewing documents provided by you that describe the construction of the foundation; reviewing drawings describing the housing of your Model 676 Projector; and computing the performance characteristics of the foundation in a drop test of the Model 676 Projector.

Background and Information From Others

We understand from our discussions with Sentinel Amersham representatives that the test foundation is used as a reaction support in a drop test for the Model 676 Projector. The projector is dropped from a height of 30 ft onto the center portion of the foundation. The drawings for the Model 676 Projector show that the weight is 625 lbs, and the end plates are fabricated from 1 in. thick steel plate.

We understand from discussions with Sentinel Amersham representatives and from construction records that the test foundation was built in 1982. The delivery tickets show that 2-1/2 cubic yards of 3,000 psi concrete were utilized. We were also told that a 1 in. thick steel plate is embedded in the top surface of the foundation and welded to reinforcing steel in the foundation.

Observations

On 5 June 1997, Joseph J. Zona of Simpson Gumpertz & Heger Inc. visited the test facility and observed the following:

- The test foundation is 7 ft 4 in. x 7 ft 5 in.
- A steel plate is embedded in the top of the foundation so that the top of the plate is approximately flush with the top of the concrete. The plate is 47 in. x 48 in. At one

side of the plate, the concrete is chipped away exposing part of the plate edge. The bottom of the plate is not visible, but 7/8 in. of plate is exposed to view.

- The top surface of the steel plate is approximately horizontal. The plate slopes a maximum of 1/8 in. per 2 ft.
- The top surface of the concrete is weathered, but sound.
- Four cracks are visible in the foundation, each emanating from a corner of the steel plate. The cracks appear stable and show no signs of recent movement.
- The concrete is flush with the adjoining bituminous pavement. There is no evidence of settlement or heaving of the foundation.
- The exposed soil in the vicinity of the foundation is firm and sandy.

Results of Analysis

We estimated the depth of the foundation as 15 in. based on the measured plan dimensions and the reported volume of concrete delivered. We characterized the supporting soil as medium dense coarse grained material.

We used simple analytical models to estimate the response of the foundation in a drop test. A conservation of momentum approach that models the test as a plastic impact provides an upper bound estimate of the kinetic energy taken by the foundation. This approach predicts that 6 percent of the kinetic energy of the Model 676 Projector is taken by the foundation upon impact.

Arya et al present a relevant method of analysis in "Design of Structures & Foundations For Vibrating Machines." The approach accounts for the participation of an effective soil mass in resisting a dynamic loading. This method predicts less than 1 percent of the kinetic energy is taken by the foundation. Arya el al also present a method of estimating the foundation deflection. We computed a deflection upon impact of 0.014 in.

We estimated the flexibility of the concrete foundation as a plate on an elastic foundation using a method presented in "Theory of Plates and Shells" by Timoshenko & Woinowsky-Krieger. This approach shows that the foundation is rigid relative to the soil, and virtually all of the foundation deflection is the result of soil response.

Discussion

The plastic impact approach provides an upper bound estimate of the energy transmitted to the foundation. In an actual test, energy is absorbed in the device being tested in both plastic deformation and rebound energy that is not accounted for in this analysis.

The Arya approach is fully applicable to foundations that support vibrating equipment. This approach may somewhat overstate the participation of the soil in a single impact loading. However, we expect the influence of the participating soil mass will be significant and, therefore, we expect the percent of kinetic energy taken by the foundation is closer to 1 percent than 6 percent.

The four cracks near the corners of the foundation intersect corners of the embedded steel plate. This suggests that the plate restrained the free shrinkage of the foundation and caused these cracks. The cracks are obviously old, yet they remain tight and there is no sign of recent movement at the cracks. This strongly indicates that the cracks have not compromised the monolithic behavior of the foundation. Any loss of stiffness in the foundation related to these cracks is insignificant within the limits of our simple analytical models.

Conclusion

Based on the study described above, we conclude that the existing test foundation absorbs between 1 and 6 percent of the kinetic energy at impact during a 30 ft drop test of a Model 676 Projector. In our opinion the foundation provides an essentially unyielding horizontal surface for the purpose of this test. For items of lesser mass, the foundation also provides an essentially unyielding horiozntal surface.

Sincerely yours,

Joseph J. Zona, P.E.
Principal
JJZ32-97.ras

Atis A. Liepins, P.E.
Senior Associate

OMEGA ENGINEERING, INC.
An OMEGA Technologies Company

Certificate of Conformance

for

AEA TECHNOLOGY

40 NORTH AVE

BURLINGTON MA 01803

Cust. P.O. #: 3291 OMEGA W.O. # 812995304

CAL-1

OMEGA Engineering, Inc. certifies that the items comprising the above order have been manufactured in accordance with all applicable instructions and specifications as published in the OMEGA TEMPERATURE MEASUREMENT HANDBOOK AND ENCYCLOPEDIA®. OMEGA Engineering Inc. further certifies that all thermocouple base and noble metal materials conform to **ANSI Limits of Error** (ANSI Standard MC96.1)

Certified by: Stephen Cardone Date: 12-04-98

Quality Assurance Inspector

Omega Engineering, Inc., One Omega Drive, Box 4047, Stamford, CT 06907
Telephone: (203) 359-1660 · FAX: (203) 359-7811
Internet Address: http://www.omega.com E-Mail: info@omega.com

OMEGA ENGINEERING, INC.
An OMEGA Technologies Company

Certificate of Conformance

for

AEA TECHNOLOGY

40 NORTH AVE

BURLINGTON MA 01803

Cust. P.O. #: 3226 OMEGA W.O. # 811973359

CAL-1

OMEGA Engineering, Inc. certifies that the items comprising the above order have been manufactured in accordance with all applicable instructions and specifications as published in the OMEGA TEMPERATURE MEASUREMENT HANDBOOK AND ENCYCLOPEDIA®. OMEGA Engineering Inc. further certifies that all thermocouple base and noble metal materials conform to **ANSI Limits of Error** (ANSI Standard MC96.1)

Certified by: Stephen Cardone Date: 11-04-98

Quality Assurance Inspector

Omega Engineering, Inc., One Omega Drive, Box 4047, Stamford, CT 06907
Telephone: (203) 359-1660 · FAX: (203) 359-7811
Internet Address: http://www.omega.com E-Mail: info@omega.com

INSPECTION INSTRUCTION AND RECORD

T10119 | C | PERIODIC MAINTENANCE | DESCRIPTION: PUNCTURE TEST BILLET | CM - NA

CHARACTERISTICS	TOLERANCE	AQL	1	2	3	4	5	6	7	8	9	10	11	12
GENERAL VISUAL	N/A	C/100%	0/1	0/1										

ORIGINATOR Dave Lim DATE 3 SEPT 97	~~P.O. / W.O.~~ FREQ. DAYS	365												
ENGINEERING APPROVAL N/A DATE	~~RECEIVING RECORD #~~ DUE DATE	3 SEPT 98	3 Sep 99											
REGULATORY APPROVAL N/A DATE	LOT / SERIAL NO.	01	01											
Q A APPROVAL K Nitty DATE 3 Sep 97	LOT QTY.	1	1											
COMMENTS:	QTY REJ / NCR NO.	0 / N/A	0 / NA											
	QTY ACC.	1	1											
	INSP / DATE	DW 3 SEPT 97	DW 3 Sep 98											

OMEGA ENGINEERING, INC.
An OMEGA Technologies Company

Certificate of Conformance

for

MPR ASSOCIATES

320 KING ST

ALEXANDRIA VA 22314

Cust. P.O. #: 420002BRB OMEGA W.O. # 901934179

CAL-1

OMEGA Engineering, Inc. certifies that the items comprising the above order have been manufactured in accordance with all applicable instructions and specifications as published in the OMEGA TEMPERATURE MEASUREMENT HANDBOOK AND ENCYCLOPEDIA®. OMEGA Engineering Inc. further certifies that all thermocouple base and noble metal materials conform to ANSI Limits of Error (ANSI Standard MC96.1)

Certified by: Stephen Cardone Date: 01-28-99

Quality Assurance Inspector

Omega Engineering, Inc., One Omega Drive, Box 4047, Stamford, CT 06907
Telephone: (203) 359-1660 · FAX: (203) 359-7811
Internet Address: http://www.omega.com E-Mail: info@omega.com

(D6) 1 Dec 98

TEKSERV

127 Riverneck Rd.
Chelmsford, MA 01824
Telephone: 978-459-9480

Calibration Report

Item ID	Contract ID	Serial Number
A51106	AEA	SN269

Date Received	PO Number	Lot Number
11/23/98	3303	ENG-21

AEA
40 NORTH AVENUE

BURLINGTON MA 01803-

Manufacturer
COLE PARMER

Model Number	Serial Number
92000-00	L98003314

Item Description
12 CHANNEL THERMOCOUPLE SCANNER

Temperature	Humidity	Actual Cal	Cal Interval	Cal Cycle	Date Of Cal	Cal Due Date
21	30		12	Monthly	11/23/98	11/23/99

Work Requested	Service Performed	Remarks
CALIBRATE/CERTIFY	CALIBRATED/CERTIFIED	IN TOLERANCE AS RECEIVED

Procedure Used	NIST Test Number	Technician
Manufacturer	413348-433349-259071-LRAN	POULIN

Calibration Checked To: Manufacturer *Spec* *Adjusted To:* Manufacturer *Spec*

Manufacturer Name	Model Number	Serial Number	Accuracy	Calibration Date	Cal Due Date
ANALOGIC	AN6520	8904010	MFG	7/3/98	7/3/99

TEKSERV CERTIFIES THAT ALL CALIBRATION EQUIPMENT USED IN THE TEST IS TRACEABLE TO N.I.S.T. AND THE TEST WAS PERFORMED IN ACCORDANCE TO ANSI/NCSL-Z540-1994, ISO-10012-1, ISO9002 AND MIL-STD-45662A

Certified By:

IN TOLERANCE
AS RECEIVED

TEKSERV
CALIBRATION DATA

CP 92000-00
Serial Number: L98 V0 3314
Date of test: 11-23-98
Prior Cal: —
Technician: MLP.

Data as Received ✓
Data After Adjustment
Data After Repair
Asset Number: ENG-21

Thermocouple Scanner
Type "K"

Channel	Standard Input (Deg F) 32.0	1000	2000	Tolerance
1	31.9	1000	2000	+/-(0.1%+0.8F)
2	31.7	999.4	2001	"
3	31.5	999.7	1999	"
4	32.0	999.6	2002	"
5	31.7	1000	2001	"
6	31.6	999.8	2001	"
7	32.0	999.7	2000	"
8	31.8	999.8	2000	"
9	31.8	1000	2000	"
10	31.9	999.7	1999	"
11	32.1	999.7	2000	"
12	31.7	999.9	2000	"

cp92000

TEKSERV 127 Riverneck Rd. Chelmsford, MA 01824 Telephone: 978-459-9480 Fax: 978-453-6336

Bill To: AEA
40 NORTH AVENUE
ATTN ACCT PAYABLE

BURLINGTON MA 01803-

Ship To: AEA
40 NORTH AVENUE

BURLINGTON MA 01803-

Service Report Invoice

Invoice Number INV143

Item ID A51106

PO Number	Ship To	UPS	Collect	Invoice Date	Contact	Phone Number	Approved By
3303	TEKSERV	Yes	No	11/23/98			

Model Number	Manufacturer	Serial Number	Accessories Received with Equipment
92000-00	COLE PARMER	L98003314	ENG-21 W/MANUAL SOFTCASE AN AC ADAPTER

Work Requested	Quantity	Part No.	Description	Unit Price	Total Price	Actual
CALIBRATE/CERTIFY						

Service Performed

Remarks

IN TOLERANCE AS RECEIVED

Calibration Regular Hours:	0	*Charge:*	$45.00	*Material:*	$0.00
Calibration Overtime Hours:	0	*Labor:*	$0.00	*% Discount:*	0
Repair Regular Hours:	0	*Cost:*	$0.00	*% Tax:*	0
Repair Overtime Hours:	0	*Labor/Hour:*	$0.00	*Shipping:*	$0.00
Contract #:	AEA	*Sub Total:*	$45.00		
Warranty:				*Total Due:*	$45.00

TEKSERV
127 Riverneck Road
Chelmsford, MA 01824
Telephone: 978 - 459-9480
FAX # 978 - 453-6336
WEB SITE: http://www.tekserv.com

Technician

APPENDIX B

MANUFACTURING ROUTE CARDS AND PRE-TEST RADIATION PROFILE DATA SHEETS

SENTINEL

TP80 (A)

ROUTE CARD

QC Lot# 10352 Complete Lot:_____ Total WO Qty.: 3 Serial No: 2243

CM: A Split Lot: ✓ Rte. Cd. Qty.: 1 Lot No: NA

Part # TP80	Description 650L SOURCE CHANGER TEST UNITS	Dwg C TP80	Rev A	WO Q89650

Oper. Seq.	Department	Operation Description	By	Date	Qty Acc	Qty Rej	Reference	Comments
0010	ASSY	MODIFY PER NOTES 3-11	RWC	15 Mar 99			TP80	QC VERIFY NOTE 6
			DW	15 MAR 99	0	1		
0020	QC	INSPECTION	DW	15 MAR 99	1	0	SOP-Q015	SEE DISPOSITION BACK
								80 lbs
0030	QA	QA REVIEW	[illegible]	15 MAR 99			SOP-Q025 & TP80	
0040	IC	STOCKROOM PROCESSING	QC	15 MAR 99			SOP-M002	
		DELIVER TO QC FOR						
		TESTING						

WI–Step	Checklist	Initials	WI–Step	Checklist	Initials	WI–Step	Checklist	Initials

ENGINEERING: S. Gr[illegible] 15 MAR 99	REGULATORY: C. Kenfman 15 Mar 99	MATERIALS: Alan Cain 15 MAR 99
PRODUCTION: RW Evans 15 Mar 99	QUALITY ASSURANCE: D.W. Kurtz 15 MAR 99	ISSUE NUMBER: I

NO	DESCRIPTION OF NONCONFORMANCE	DISPOSITION	INDIV/ DATE	INSP/DATE
1	THRU BOLT TORQUE	*	RWE 15 Mar 99	DW 15 MAR 99
	135 IN LBS (4 PL)			
	*USE AS IS - TORQUE OF 135 in-lbs			
	ENSURES TOP AND BOTTOM PLATES ARE			
	PROPERLY SEATED - ECO WILL BE			
	ISSUED TO CHANGE SPECIFIED TORQUE			
	ON DRAWING TO 135 ±5 in-lbs			
	NPM 15MAR99			
	DWK 15MAR99			
	[illegible] 16 Mar 99			
	MZS 16 March 99			

PART NUMBER	DESCRIPTION	CM	SERIAL/ LOT NO.	INITIALS	DATE
650L	SOURCE CHANGER	A	2243	RWE	15 Mar 99
* SCR200	5/16-18 HEX BOLT	A	99072-1	RWE	15 Mar 99
* BOLT # 4					
#5				RWE	15 Mar 99
#6					
#7					

MTE SN	MTE DESCRIPTION	CAL DUE DATE	INITIALS	DATE
1126131	SCALE	16 MAY 99	DW	15 MAR 99
171	TORQUE WRENCH	8/7/99	RWE	15 Mar 99

CHANGE VERIFICATION

PART NUMBER	DESCRIPTION	REV	ECO	INDIVIDUAL	VERIFIED

REVISIONS				
REV.	ECO/TGR #	DESCRIPTION	APPROVALS	DATE
A	2552	INITIAL RELEASE	SEE TITLE	BLOCK

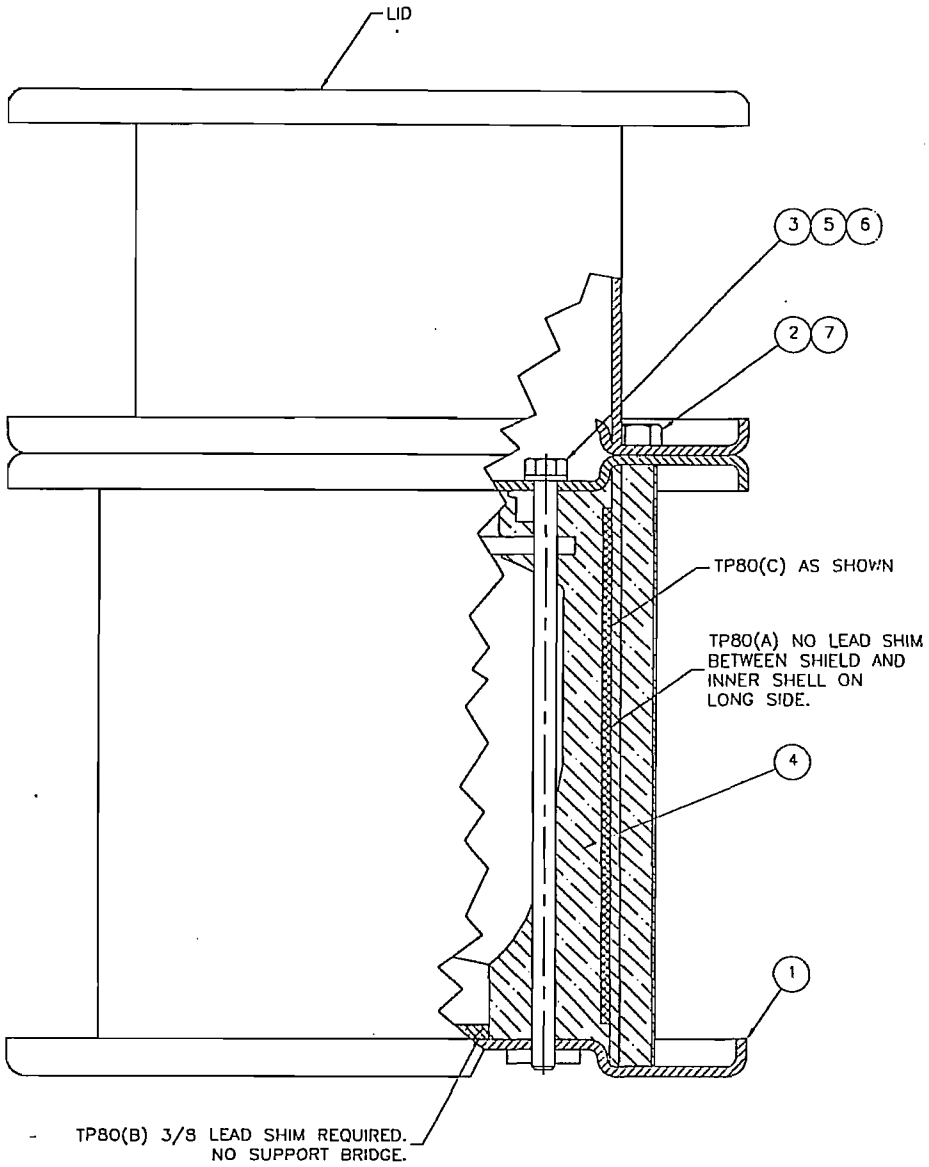

NOTES:

1. UNIT DESCRIBED ON DRAWING C65009 TO BE MODIFIED AS FOLLOWS:
2. REMOVE LID AND DISCARD LID BOLTS (ITEM 2).
3. REMOVE THROUGH BOLTS (ITEM 3) AND DISCARD.
4. IF BOTTOM PLATE (ITEM 1) IS CARBON STEEL, THEN:
   A. REMOVE BOTTOM PLATE AND DISCARD.
   B. PATCH MISSING OR DAMAGED FOAM (ITEM 4) WITH NEW VULTAFOAM (ITEM 4).
   C. INSTALL NEW STAINLESS STEEL BOTTOM PLATE (ITEM 1).
5. INSTALL NEW THROUGH BOLTS (ITEM 3) WITH LOCKWASHERS (ITEM 5).
6. APPLY THREAD LUBRICANT AND TORQUE EACH THROUGH BOLT (ITEM 3) TO 100±5 in-lbs.
7. INSTALL SAFETY WIRE (ITEM 6) THROUGH EACH BOLT IN PAIRS.
8. INSTALL AND LOCK BOTH DUMMY SOURCE ASSEMBLIES (ITEM 8) INTO EACH PORT (NOT SHOWN).
9. VERIFY MARKING ON NEW LID BOLTS (ITEM 2) IS "B8".
10. INSTALL LID WITH NEW LID BOLTS (ITEM 2).
11. INSTALL TAMPER INDICATING SEAL WIRE (ITEM 7) THROUGH TWO LID BOLTS (ITEM 2).

ITEM	QTY	NAME	DESCRIPTION
8	2	42409XL	DUMMY SOURCE WIRE ASSEMBLY
7	AR		TAMPER INDICATING SEAL WIRE
6	AR	WRS032	SAFETY WIRE
5	4		LOCK WASHER 5/16 DIA
4	AR	FOM001	VULTAFOAM #16-L-708
3	4	SCR200	HEX HEAD BOLT 5/16-18 X 8 LG. DRILLED HEAD, 300 SERIES (18-8) STN STL
2	4	SCR201	HEX HEAD BOLT 3/8-16 X 7/8 LG. DRILLED HEAD, A198 GR B8 CL 2
1	1	C65000-6	BOTTOM PLATE

THIS DRAWING IS THE EXCLUSIVE PROPERTY OF AEA TECHNOLOGY QSA. IT MAY ONLY BE USED FOR THE PURPOSE FOR WHICH IT WAS ISSUED. IT MAY NOT BE DUPLICATED IN ANY WAY, NOR TRANSMITTED TO ANY THIRD PARTY WITHOUT THE EXPRESS PERMISSION OF AEA TECHNOLOGY QSA.

MATERIALS: C65009 & PARTS LIST ABOVE

PROTECTIVE FINISH: NONE

UNLESS OTHERWISE SPECIFIED:
1. DIMENSIONS ARE IN INCHES.
2. MIN SURFACE TEXTURE: 125
3. TOLERANCES APPLY AFTER PLATING.
4. REMOVE BURRS AND SHARP EDGES.
5. DO NOT SCALE DRAWING.
6. TOLERANCES: .X ± 0.1, FRACTIONS ± 1/64, .XX ± 0.01, MACHINED ANGLES ± 1°, .XXX ± 0.005

USED ON:

DRAWN	S. Gaumont	15 MAR 97
CHECKED	Leon Rotten	15 MAR 97
APPR.	S. Gaumont	15 MAR 97

THIRD ANGLE PROJECTION

SAFETY CLASS A

AEA TECHNOLOGY QSA
40 NORTH AVE, BURLINGTON, MA 01803

TITLE: MODEL 650L TEST SPECIMEN

SIZE C | DWG. NO. TP80 | REV A

SCALE: NA | SHEET 1 OF 1

SENTINEL

Sprecher [illegible] TP80 (A)

ROUTE CARD

QC Lot# 10243 | Complete Lot: | Total WO Qty.: 3 | Serial No: 2243

CM: A | Split Lot: ✓ | Rte. Cd. Qty.: 1 | Lot No: NA

Part #	Description	Dwg	Rev	WO
TP80	650L SOURCE CHANGER TEST UNITS	TP80 B-	B	Q89650

Oper. Seq.	Department	Operation Description	By	Date	Qty Acc	Qty Rej	Reference	Comments
0010	ASSY	MODIFY PER NOTES 2-4	RWE	25Feb99			TP80	
0020	QC	INSPECTION	DXe	25Feb99	1	0	SOP-Q015	
0030	QC	FINAL PROFILE	DXe FOR MRB	25Feb99	1	0	WI-Q09	TOTAL WEIGHT 800#
0040	QA	QA REVIEW	[illegible]	25Feb99			SOP-Q025 & TP80	
0050	IC	STOCKROOM PROCESSING	QC	25Feb99			SOP-M002	
		DELIVER TO QC FOR TESTING						

WI-Step	Checklist	Initials	WI-Step	Checklist	Initials	WI-Step	Checklist	Initials

ENGINEERING: [illegible] | REGULATORY: [illegible] 25Feb99 | MATERIALS: [illegible] 25Feb

PRODUCTION: RW Evans 25 Feb 99 | QUALITY ASSURANCE: D.W. Kurtz 25Feb99 | ISSUE NUMBER: 1

QP2

DESCRIPTION OF NONCONFORMANCE	DISPOSITION	INDIV/ DATE	INSP/DATE

PART NUMBER	DESCRIPTION	CM	SERIAL/ LOT NO.	INITIALS	DATE
650L	SOURCE CHANGER	A	2243	RWE	25 Feb 99
SCR200	5/16-18 HEX BOLT	A	99054-1	RWE	25 Feb 99

MTE SN	MTE DESCRIPTION	CAL DUE DATE	INITIALS	DATE
1126131	SCALE	16 May 99	RWE	25 Feb 99

CHANGE VERIFICATION

PART NUMBER	DESCRIPTION	REV	ECO	INDIVIDUAL	VERIFIED

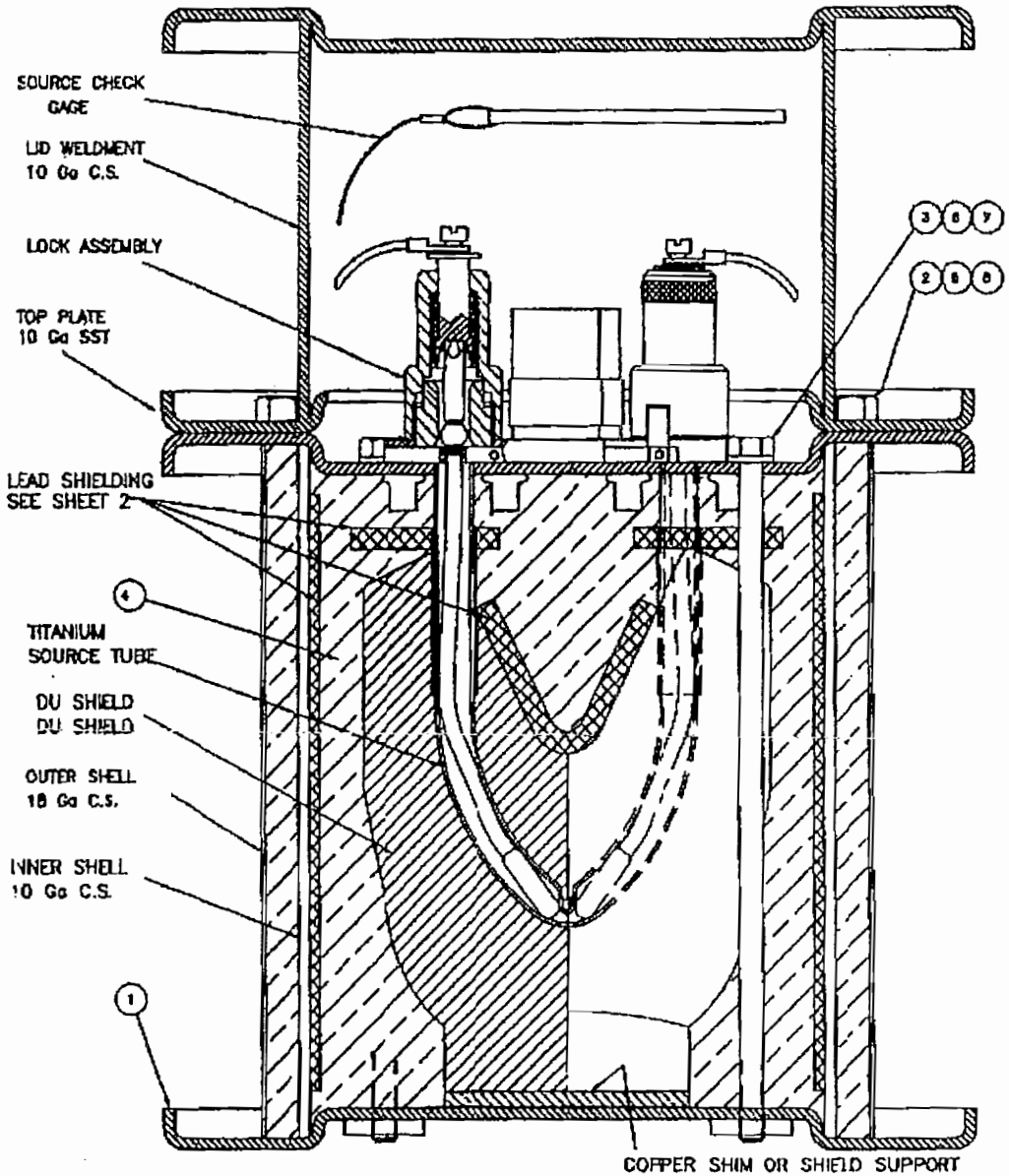

Notes:

1. Refer to Drawing C65009 for construction of original unit.

2. Modify unit as follows:
   a) Remove lid and discard bolts.
   b) Remove through bolts and discard.
   c) If bottom plate is carbon steel, remove existing plate. Patch missing or damaged foam with new Vultafoam., Item (4). Install new stainless steel bottom plate, Item (1).
   d) Install new through bolts, Item (3), with lock washers and install safety wire for security.
   e) Install two (2) dummy source assembly 424-9's, one in each side.

3. Verify marking on new lid bolts, Item (2), is "B8".

4. Install lid with new lid bolts, Item (2), and lock washers, and install seal wire for shipment tamper indicator.

ITEM	QTY	NAME	DESCRIPTION
8	AR		TAMPER PROOF SEAL WIRE
7	AR	WRS032	SAFETY WIRE
6	4		LOCK WASHER 5/16 DIA
5	4		LOCK WASHER, 3/8 DIA.
4	AR	FOM001	VULTAFOAM #16-L-708
3	4	SCR200	HEX HEAD BOLT 5/16-18 X 8 LG. DRILLED HEAD, STAINLESS STEEL 304
2	4	SCR201	HEX HEAD BOLT 3/8-16 X 7/8 LG. DRILLED HEAD, A198 GR B8 CL 2
1	1	C65000-6	BOTTOM PLATE

UNLESS OTHERWISE SPECIFIED:
ALL DIMENSIONS ARE INCHES AND REFERENCE

AEATECHNOLOGY QSA
40 NORTH AVE, BURLINGTON, MA 01803

DESCRIPTIVE DRAWING

DESCRIPTION	APPROVALS	DATE	LTR
FORMAT CORRECTED DDCO#31			B

REVISIONS

TITLE 650L SOURCE CHANGER TEST UNITS

SIZE A | DWG. NO. R-TP80 | SCALE: NONE | SHEET 1 OF 2 | REV E

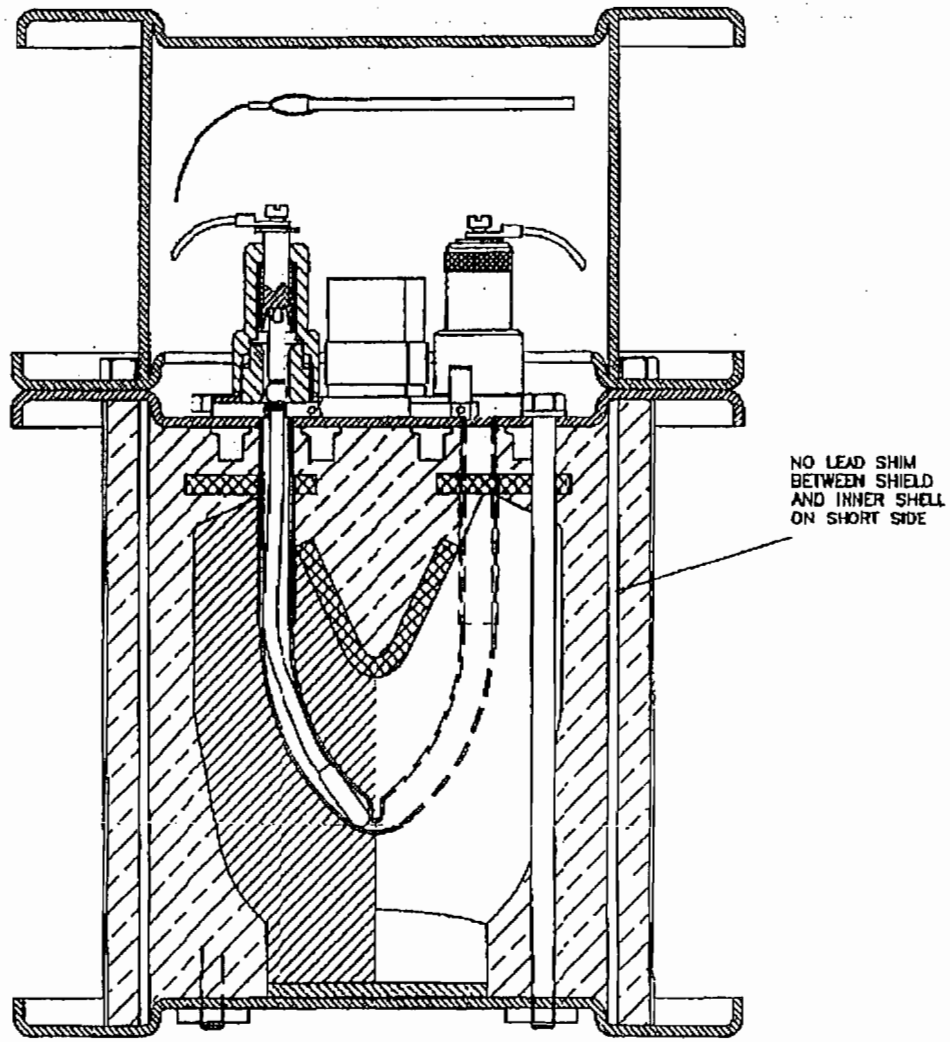

TP 80 (A)

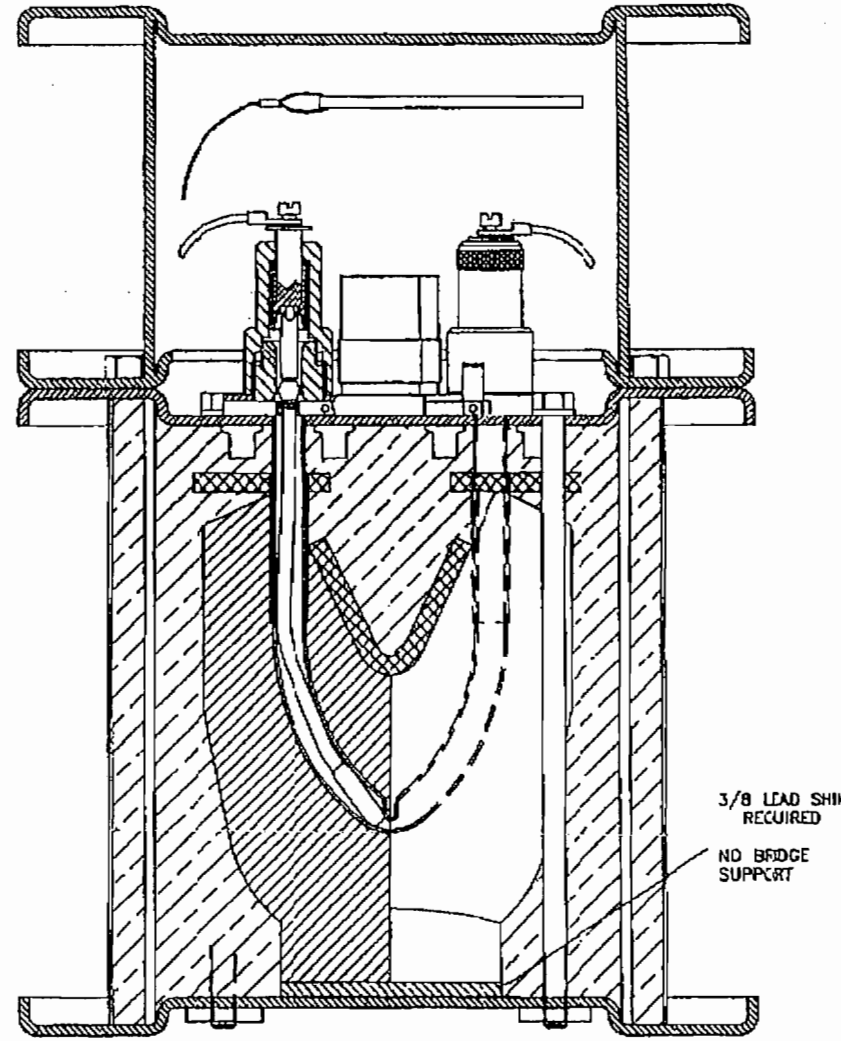

TP 80 (B)

NOTE:
NO SPECIAL REQUIREMENTS
FOR
LEAD LOCATION N TP80(C)

UNLESS OTHERWISE SPECIFIED: ALL DIMENSIONS ARE REFERENCE			
SIZE A	DWG. NO. R–TP80		REV B
	SCALE: NONE	SHEET 2 OF 2	

SENTINEL TP80 (B)

ROUTE CARD

QC Lot# 10352 | Complete Lot: | Total WO Qty.: 3 | Serial No: ~~2243~~ 182 DW 15 MAR 99

CM: A | Split Lot: ✓ | Rte. Cd. Qty.: 1 | Lot No: NA

Part # TP80	Description 650L SOURCE CHANGER TEST UNITS	Dwg C TP80	Rev A	WO Q89650

Oper. Seq.	Department	Operation Description	By	Date	Qty Acc	Qty Rej	Reference	Comments
0010	ASSY	MODIFY PER NOTES 3-11	KWE	15 Mar 99			TP80	QC VERIFY NOTE 6
			DW	15 MAR 99	~~0~~	1		
0020	QC	INSPECTION	DW	15 MAR 99	1	~~0~~	SOP-Q015	SEE DISPOSITION BACK
								83.6 lbs
0030	QA	QA REVIEW	[illegible]	15 MAR 99			SOP-Q025 & TP80	
0040	IC	STOCKROOM PROCESSING	QC	15 MAR 99			SOP-M002	
		DELIVER TO QC FOR						
		TESTING						

WI–Step	Checklist	Initials	WI–Step	Checklist	Initials	WI–Step	Checklist	Initials

NGINEERING: S. Grant 15 Mar 99	REGULATORY: C. Kenyhan 15 Mar 99	MATERIALS: Alan Cain 15 MAR 99
RODUCTION: R W Evans 15 Mar 99	QUALITY ASSURANCE: D.W. Kentz 15 MAR 99	ISSUE NUMBER: 1

NO.	DESCRIPTION OF NONCONFORMANCE	DISPOSITION	INDIV/ DATE	INSP/DATE
1	THRU BOLT TORQUE	*	RWE 15 Mar 99	DW 15MAR 99
	135 IN LBS (4PL)			
	*USE AS IS - Torque of 135 in-lbs			
	ENSURES TOP AND BOTTOM PLATES ARE			
	PROPERLY SEATED - ECO WILL BE			
	ISSUED TO CHANGE SPECIFIED TORQUE			
	ON DRAWING TO 135± 5 lbs			
	NAM 15MAR99			
	BWK 15MAR99			
	RLC 16 Mar 99			
	MLS 16 MAR99			

PART NUMBER	DESCRIPTION	CM	SERIAL/ LOT NO.	INITIALS	DATE
650L	SOURCE CHANGER	A	182	RWE	15 Mar 99
* SCR200	5/16-18 HEX BOLT	A	99072-1	RWE	15 Mar 99
*BOLT #8					
#9					
#10				RWE	15 Mar 99
#11					

MTE SN	MTE DESCRIPTION	CAL DUE DATE	INITIALS	DATE
1126131	SCALE	16 MAY 99	DW	15 MAR 99
171	TORQUE WRENCH	8/7/99	RWE	15 Mar 99

CHANGE VERIFICATION

PART NUMBER	DESCRIPTION	REV	ECO	INDIVIDUAL	VERIFIED

REVISIONS				
REV.	ECO/TGR #	DESCRIPTION	APPROVALS	DATE
A	2552	INITIAL RELEASE	SEE TITLE	BLOCK

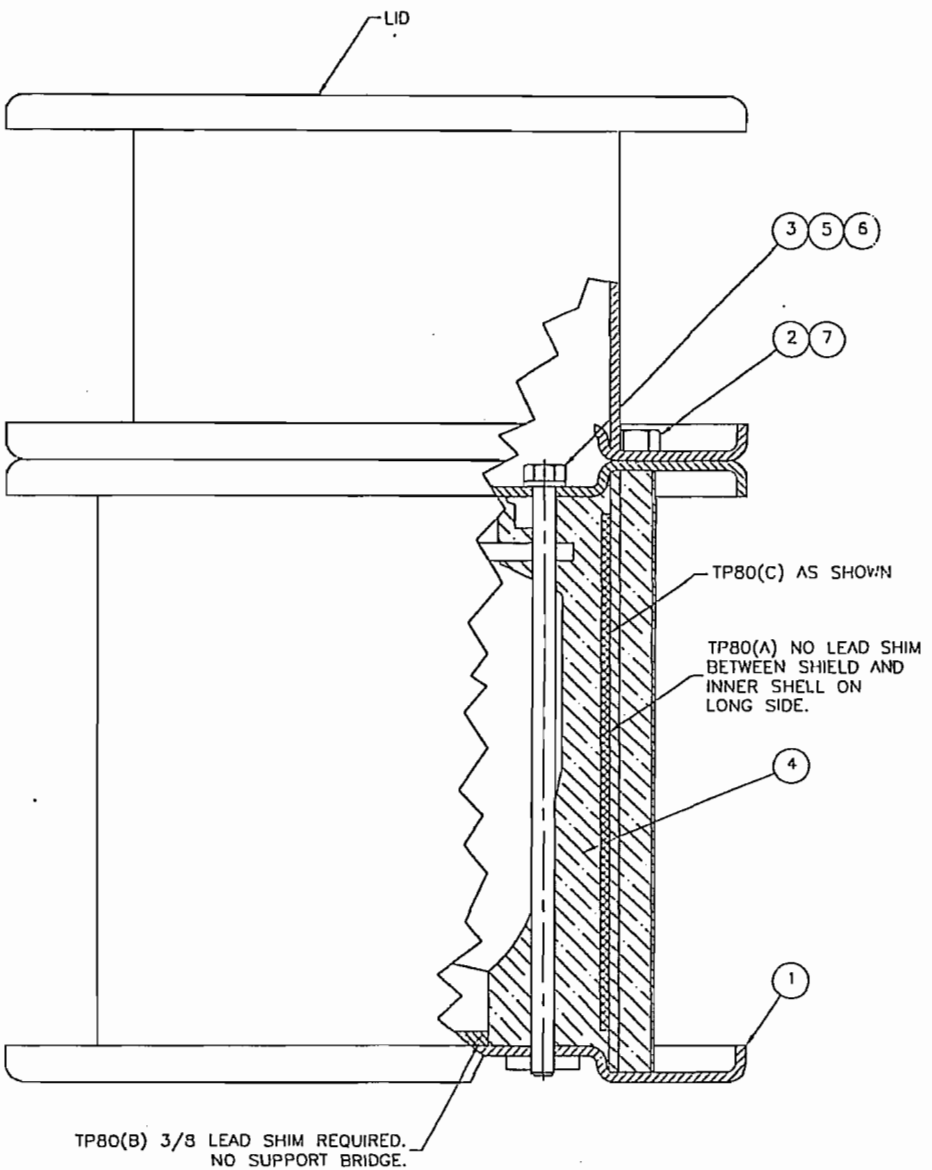

NOTES:

1. UNIT DESCRIBED ON DRAWING C65009 TO BE MODIFIED AS FOLLOWS:
2. REMOVE LID AND DISCARD LID BOLTS (ITEM 2).
3. REMOVE THROUGH BOLTS (ITEM 3) AND DISCARD.
4. IF BOTTOM PLATE (ITEM 1) IS CARBON STEEL, THEN:
   A. REMOVE BOTTOM PLATE AND DISCARD.
   B. PATCH MISSING OR DAMAGED FOAM (ITEM 4) WITH NEW VULTAFOAM (ITEM 4).
   C. INSTALL NEW STAINLESS STEEL BOTTOM PLATE (ITEM 1).
5. INSTALL NEW THROUGH BOLTS (ITEM 3) WITH LOCKWASHERS (ITEM 5).
6. APPLY THREAD LUBRICANT AND TORQUE EACH THROUGH BOLT (ITEM 3) TO 100±5 in-lbs.
7. INSTALL SAFETY WIRE (ITEM 6) THROUGH EACH BOLT IN PAIRS.
8. INSTALL AND LOCK BOTH DUMMY SOURCE ASSEMBLIES (ITEM 8) INTO EACH PORT (NOT SHOWN).
9. VERIFY MARKING ON NEW LID BOLTS (ITEM 2) IS "B8".
10. INSTALL LID WITH NEW LID BOLTS (ITEM 2).
11. INSTALL TAMPER INDICATING SEAL WIRE (ITEM 7) THROUGH TWO LID BOLTS (ITEM 2).

ITEM	QTY	NAME	DESCRIPTION
8	2	42409XL	DUMMY SOURCE WIRE ASSEMBLY
7	AR		TAMPER INDICATING SEAL WIRE
6	AR	WRS032	SAFETY WIRE
5	4		LOCK WASHER 5/16 DIA
4	AR	FOM001	VULTAFOAM #16-L-708
3	4	SCR200	HEX HEAD BOLT 5/16-18 X 8 LG. DRILLED HEAD, 300 SERIES (18-8) STN STL
2	4	SCR201	HEX HEAD BOLT 3/8-16 X 7/8 LG. DRILLED HEAD, A198 GR B8 CL 2
1	1	C65000-6	BOTTOM PLATE

THIS DRAWING IS THE EXCLUSIVE PROPERTY OF AEA TECHNOLOGY QSA. IT MAY ONLY BE USED FOR THE PURPOSE FOR WHICH IT WAS ISSUED. IT MAY NOT BE DUPLICATED IN ANY WAY, NOR TRANSMITTED TO ANY THIRD PARTY WITHOUT THE EXPRESS PERMISSION OF AEA TECHNOLOGY QSA.

MATERIALS: C65009 & PARTS LIST ABOVE

PROTECTIVE FINISH: NONE

UNLESS OTHERWISE SPECIFIED:
1. DIMENSIONS ARE IN INCHES.
2. MIN SURFACE TEXTURE: 125
3. TOLERANCES APPLY AFTER PLATING.
4. REMOVE BURRS AND SHARP EDGES.
5. DO NOT SCALE DRAWING.
6. TOLERANCES: .X ± 0.1, FRACTIONS ± 1/64, .XX ± 0.01, MACHINED ANGLES ± 1°, .XXX ± 0.005

USED ON:

DRAWN	S. Gemmi	15 Mar 97
CHECKED	Alan Rogers	15 MAR 97
APPR.	S. Gemmi	15 Mar 97

THIRD ANGLE PROJECTION

SAFETY CLASS A

AEA TECHNOLOGY QSA
40 NORTH AVE, BURLINGTON, MA 01803

TITLE: MODEL 650L TEST SPECIMEN

SIZE C | DWG. NO. TP80 | REV A

SCALE: NA | SHEET 1 OF 1

SENTINEL

TP80 (B) 2 MAR 99

ROUTE CARD

XC Lot# 10243 | Complete Lot: | Total WO Qty.: 3 | Serial No: 182

CM: A | Split Lot: ✓ | Rtc. Cd. Qty.: 1 | Lot No: NA

Part # TP80	Description 650L SOURCE CHANGER TEST UNITS	Dwg # TP80	Rev B	WO 089650

Oper. Seq.	Department	Operation Description	By	Date	Qty Acc	Qty Rej	Reference	Comments
0010	ASSY	MODIFY PER NOTES 2-4	RWE	25 Feb 99			TP80	
0020	QC	INSPECTION	DW	25 Feb 99	1	0	SOP-Q015	
0030	QC	FINAL PROFILE	DW FOR MAB	25 Feb 99	1	0	WI-Q09	TOTAL WEIGHT 83.6 #
0040	QA	QA REVIEW	F	25 Feb 99			SOP-Q025 & TP80	
0050	IC	STOCKROOM PROCESSING DELIVER TO QC FOR TESTING	QC	25 Feb 99			SOP-M002	

WI-Step	Checklist	Initials	WI-Step	Checklist	Initials	WI-Step	Checklist	Initials

ENGINEERING: [illegible] 25 Feb 99 | REGULATORY: C. Rowman 25 Feb 99 | MATERIALS: [illegible] 25 F

PRODUCTION: RW Crum 25 Feb 99 | QUALITY ASSURANCE: D.W. Kurtz 25 Feb 99 | ISSUE NUMBER: 1

Q

SENTINEL

DESCRIPTION OF NONCONFORMANCE	DISPOSITION	INDIV/ DATE	INSP/DATE

PART NUMBER	DESCRIPTION	CM	SERIAL/ LOT NO.	INITIALS	DATE
650L	SOURCE CHANGER	A	182	KWE	25 Feb 99
SCR200	5/16-18 HEX BOLT	A	99054-1	KWE	25 Feb 99

MTE SN	MTE DESCRIPTION	CAL DUE DATE	INITIALS	DATE
1126131	SCALE	16 May 99	KWE	25 Feb 99

CHANGE VERIFICATION

PART NUMBER	DESCRIPTION	REV	ECO	INDIVIDUAL	VERIFIED

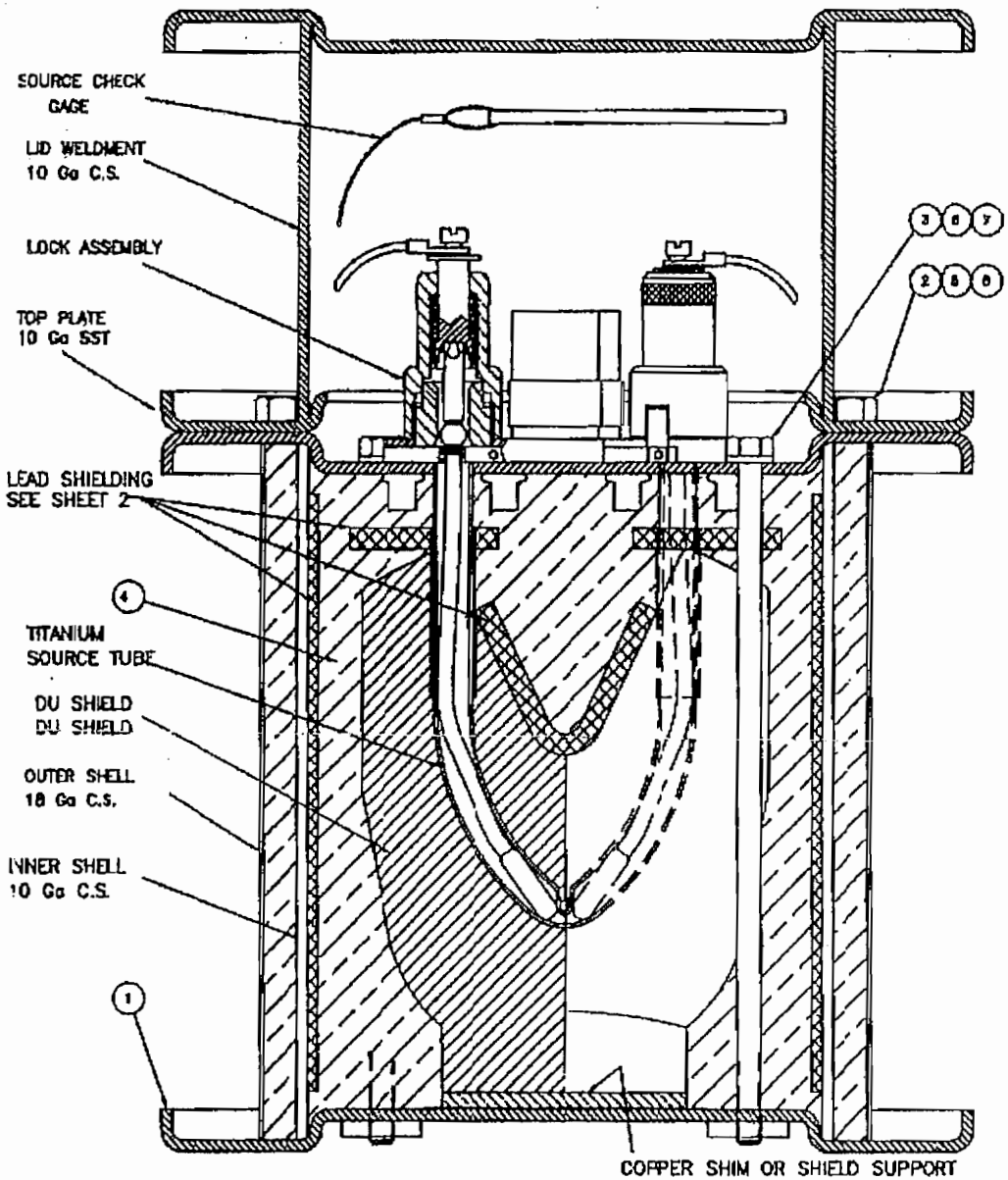

Notes:

1. Refer to Drawing C65009 for construction of original unit.

2. Modify unit as follows:
   a) Remove lid and discard bolts.
   b) Remove through bolts and discard.
   c) If bottom plate is carbon steel, remove existing plate. Patch missing or damaged foam with new Vultafoam., Item (4). Install new stainless steel bottom plate, Item (1).
   d) Install new through bolts, Item (3), with lock washers and install safety wire for security.
   e) Install two (2) dummy source assembly 424-9's, one in each side.

3. Verify marking on new lid bolts, Item (2), is "B8".

4. Install lid with new lid bolts, Item (2), and lock washers, and install seal wire for shipment tamper indicator.

ITEM	QTY	NAME	DESCRIPTION
8	AR		TAMPER PROOF SEAL WIRE
7	AR	WRS032	SAFETY WIRE
6	4		LOCK WASHER 5/16 DIA
5	4		LOCK WASHER, 3/8 DIA.
4	AR	FOM001	VULTAFOAM #16-L-708
3	4	SCR200	HEX HEAD BOLT 5/16-18 X 8 LG. DRILLED HEAD, STAINLESS STEEL 304
2	4	SCR201	HEX HEAD BOLT 3/8-16 X 7/8 LG. DRILLED HEAD, A193 GR B8 CL 2
1	1	C65000-6	BOTTOM PLATE

UNLESS OTHERWISE SPECIFIED:
ALL DIMENSIONS ARE INCHES AND REFERENCE

AEATECHNOLOGY QSA
40 NORTH AVE, BURLINGTON, MA 01803

DESCRIPTIVE DRAWING

TITLE 650L SOURCE CHANGER TEST UNITS

DESCRIPTION	APPROVALS	DATE	LTR
FORMAT CORRECTED DDCO#31	T.L	05FEB99	B

REVISIONS

SIZE A | DWG. NO. R-TP80 | SCALE: NONE | SHEET 1 OF 2 | REV B

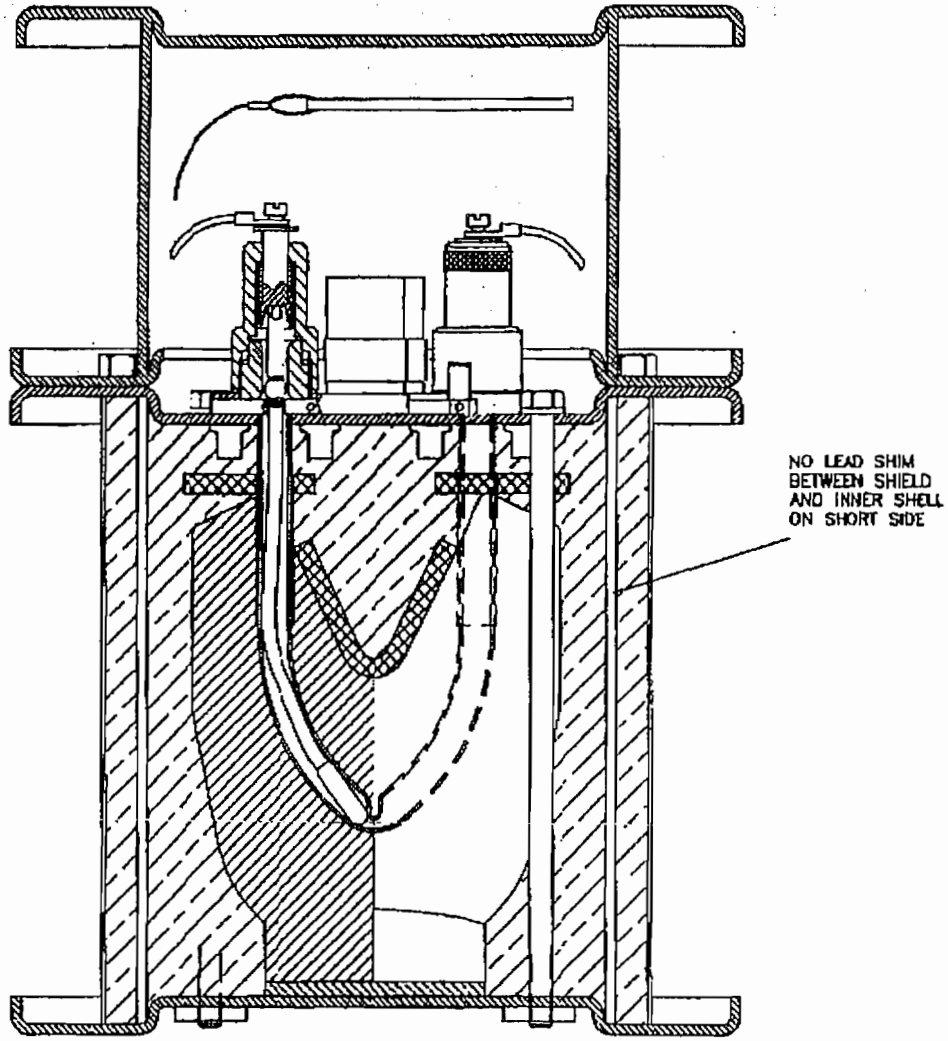

TP 80 (A)

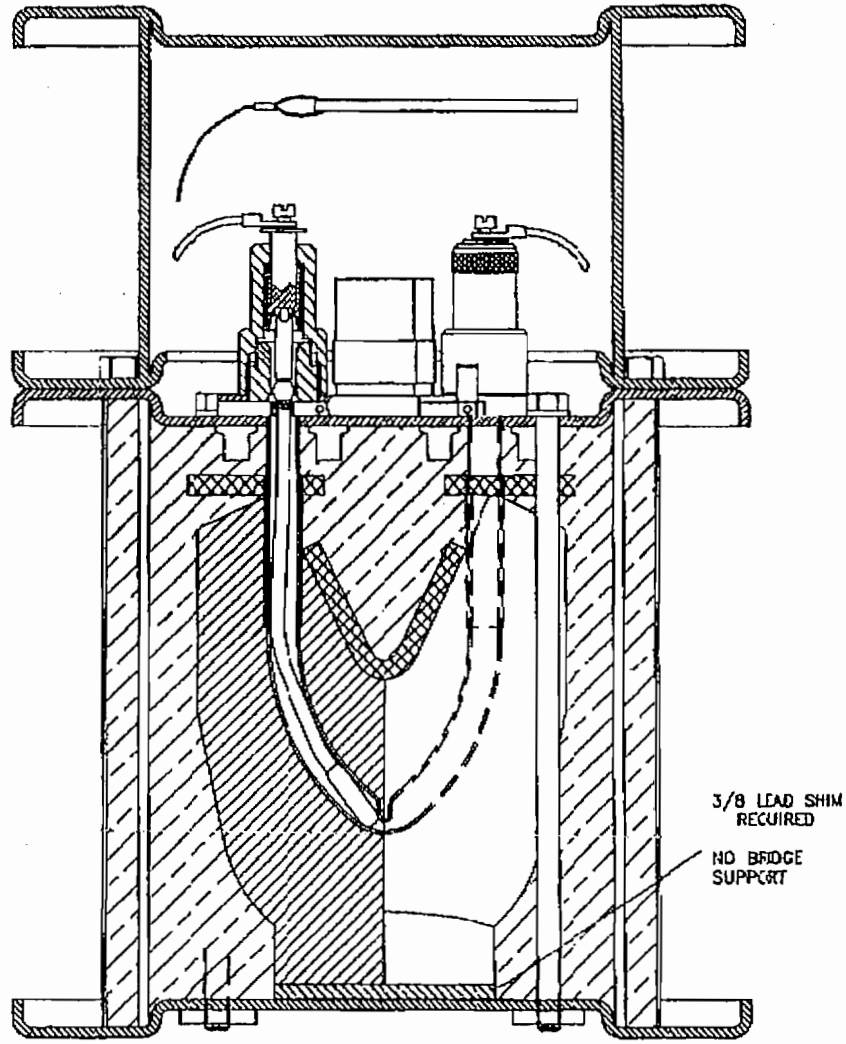

TP 80 (B)

NOTE:
NO SPECIAL REQUIREMENTS
FOR
LEAD LOCATION N TP80(C)

UNLESS OTHERWISE SPECIFIED: ALL DIMENSIONS ARE REFERENCE			
SIZE A	DWG. NO. R–TP80		REV B
	SCALE: NONE	SHEET 2 OF 2	

SENTINEL TP80 (c)

ROUTE CARD

QC Lot# 10352 | Complete Lot: ✓ 15 MAR 99 | Total WO Qty.: 3 | Serial No: 195

CM: A | Split Lot: ✓ | Rte. Cd. Qty.: 1 | Lot No: NA

Part # TP80		Description 650L SOURCE CHANGER TEST UNITS		Dwg C TP80			Rev A	WO Q89650
Oper. Seq.	Department	Operation Description	By	Date	Qty Acc	Qty Rej	Reference	Comments
0010	ASSY	MODIFY PER NOTES 3-11	RWE	15 Mar 99			TP80	QC VERIFY NOTE 6 15 MAR 99
			15 MAR 99		0	1		
0020	QC	INSPECTION	15 MAR 99		1	0	SOP-Q015	SEE DISPOSITION BACK
								89 lbs
0030	QA	QA REVIEW		15 MAR 99			SOP-Q025 & TP80	
0040	IC	STOCKROOM PROCESSING		15 MAR 99			SOP-M002	
		DELIVER TO QC FOR						
		TESTING						

WI–Step	Checklist	Initials	WI–Step	Checklist	Initials	WI–Step	Checklist	Initials

ENGINEERING: S. Grimi 15 MAR 99 | REGULATORY: C. Kenyhan 15 Mar 99 | MATERIALS: Alan Cain 15 MAR 99

PRODUCTION: RW Evans 15 Mar 99 | QUALITY ASSURANCE: D.W. Kurtz 15 MAR 99 | ISSUE NUMBER: 1

SENTINEL

NO	DESCRIPTION OF NONCONFORMANCE	DISPOSITION	INDIV/ DATE	INSP/DATE
1	THRU BOLT TORQUE	*	RWG 15 Mar 99	DW 15 MAR 99
	135 IN LBS (4PC)			
	*USE AS IS - Torque of 135 in-lbs			
	ensures top and bottom plates are			
	properly seated - ECO will be			
	issued to change specified torque			
	on drawing to 135 ± 5 in-lbs			
	NM 15 MAR 99			
	RWK 15 MAR 99			
	16 Mar 99			
	M2 8 16 Mar 99			

PART NUMBER	DESCRIPTION	CM	SERIAL/ LOT NO.	INITIALS	DATE
650L	SOURCE CHANGER	A	195	RWE	15 Mar 99
* SCR200	5/16-18 HEX BOLT	A	99072-1	RWE	15 Mar 99
* BOLT # 12					
# 13				RWE	15 Mar 99
# 14					
# 15					

MTE SN	MTE DESCRIPTION	CAL DUE DATE	INITIALS	DATE
F16383	SCALE	16 MAY 99	DW	15 MAR 99
171	TORQUE WRENCH	8/7/99	RWE	15 Mar 99

CHANGE VERIFICATION

PART NUMBER	DESCRIPTION	REV	ECO	INDIVIDUAL	VERIFIED

REVISIONS				
REV.	ECO/TGR #	DESCRIPTION	APPROVALS	DATE
A	2552	INITIAL RELEASE	SEE TITLE	BLOCK

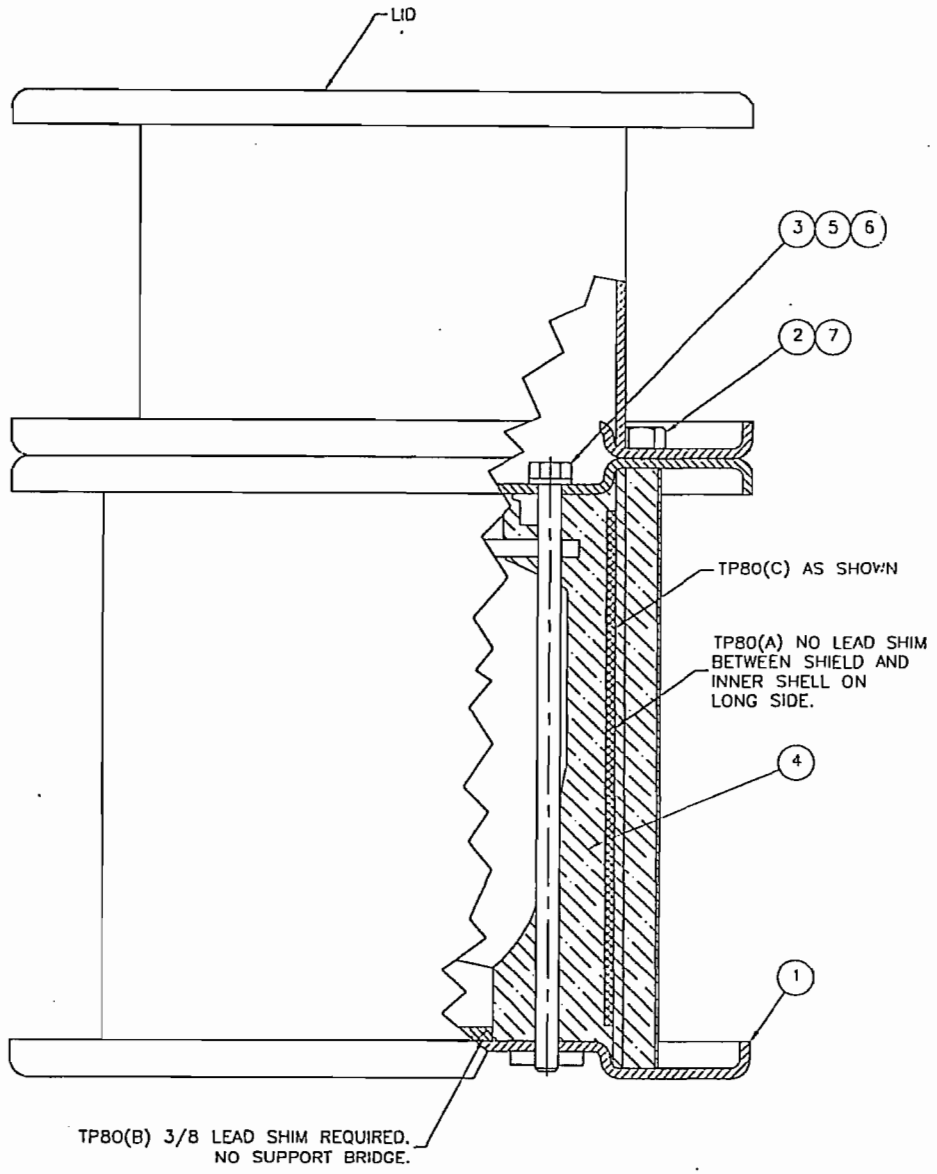

NOTES:

1. UNIT DESCRIBED ON DRAWING C65009 TO BE MODIFIED AS FOLLOWS:
2. REMOVE LID AND DISCARD LID BOLTS (ITEM 2).
3. REMOVE THROUGH BOLTS (ITEM 3) AND DISCARD.
4. IF BOTTOM PLATE (ITEM 1) IS CARBON STEEL, THEN:
   A. REMOVE BOTTOM PLATE AND DISCARD.
   B. PATCH MISSING OR DAMAGED FOAM (ITEM 4) WITH NEW VULTAFOAM (ITEM 4).
   C. INSTALL NEW STAINLESS STEEL BOTTOM PLATE (ITEM 1).
5. INSTALL NEW THROUGH BOLTS (ITEM 3) WITH LOCKWASHERS (ITEM 5).
6. APPLY THREAD LUBRICANT AND TORQUE EACH THROUGH BOLT (ITEM 3) TO 100±5 in-lbs.
7. INSTALL SAFETY WIRE (ITEM 6) THROUGH EACH BOLT IN PAIRS.
8. INSTALL AND LOCK BOTH DUMMY SOURCE ASSEMBLIES (ITEM 8) INTO EACH PORT (NOT SHOWN).
9. VERIFY MARKING ON NEW LID BOLTS (ITEM 2) IS "B8".
10. INSTALL LID WITH NEW LID BOLTS (ITEM 2).
11. INSTALL TAMPER INDICATING SEAL WIRE (ITEM 7) THROUGH TWO LID BOLTS (ITEM 2).

ITEM	QTY	NAME	DESCRIPTION
8	2	42409XL	DUMMY SOURCE WIRE ASSEMBLY
7	AR		TAMPER INDICATING SEAL WIRE
6	AR	WRS032	SAFETY WIRE
5	4		LOCK WASHER 5/16 DIA
4	AR	FOM001	VULTAFOAM #16-L-708
3	4	SCR200	HEX HEAD BOLT 5/16-18 X 8 LG. DRILLED HEAD, 300 SERIES (18-8) STN STL
2	4	SCR201	HEX HEAD BOLT 3/8-16 X 7/8 LG. DRILLED HEAD, A198 GR B8 CL 2
1	1	C65000-6	BOTTOM PLATE

THIS DRAWING IS THE EXCLUSIVE PROPERTY OF AEA TECHNOLOGY QSA. IT MAY ONLY BE USED FOR THE PURPOSE FOR WHICH IT WAS ISSUED. IT MAY NOT BE DUPLICATED IN ANY WAY, NOR TRANSMITTED TO ANY THIRD PARTY WITHOUT THE EXPRESS PERMISSION OF AEA TECHNOLOGY QSA.

MATERIALS: C65009 & PARTS LIST ABOVE

PROTECTIVE FINISH: NONE

UNLESS OTHERWISE SPECIFIED:
1. DIMENSIONS ARE IN INCHES.
2. MIN SURFACE TEXTURE: 125
3. TOLERANCES APPLY AFTER PLATING.
4. REMOVE BURRS AND SHARP EDGES.
5. DO NOT SCALE DRAWING.
6. TOLERANCES: .X ± 0.1; FRACTIONS ± 1/64; .XX ± 0.01; MACHINED ANGLES ± 1°; .XXX ± 0.005

USED ON:

DRAWN	S. Gaumi	15 MAR 97
CHECKED	Rob Rostron	15 MAR 97
APPR.	S. Gaumi	15 MAR 97

THIRD ANGLE PROJECTION

SAFETY CLASS A

AEATECHNOLOGY QSA
40 NORTH AVE, BURLINGTON, MA 01803

TITLE: MODEL 650L TEST SPECIMEN

SIZE	DWG. NO.	REV
C	TP80	A

SCALE: NA | SHEET 1 OF 1

SENTINEL

ROUTE CARD

QC Lot# 10283 | Complete Lot: N/A | Total WO Qty.: ~~3~~ 4 | Serial No: 195

CM: A | Split Lot: ✓ | Rte. Cd. Qty.: 1 | Lot No: NA

Part # TP80	Description 650L SOURCE CHANGER TEST UNITS	Dwg TP80 R-	Rev B	WO Q89650

Oper. Seq.	Department	Operation Description	By	Date	Qty Acc	Qty Rej	Reference	Comments
0010	ASSY	MODIFY PER NOTES 2-4	RWE	3Mar99			TP80	
0020	QC	INSPECTION	[illegible]	3 MAR 99	1	0	SOP-Q015	
0030	QC	FINAL PROFILE	MMB	4 March 99	1	0	WI-Q09	TOTAL WEIGHT 89 #LB
0040	QA	QA REVIEW	[illegible]	4 MAR 99			SOP-Q025 & TP80	
0050	IC	STOCKROOM PROCESSING	AC	4MAR99			SOP-M002	
		DELIVER TO QC FOR TESTING						

WI–Step	Checklist	Initials	WI–Step	Checklist	Initials	WI–Step	Checklist	Initials

ENGINEERING: [illegible] | REGULATORY: [illegible] 25Feb99 | MATERIALS: [illegible] 25Feb

PRODUCTION: RW [illegible] 25 Feb 99 | QUALITY ASSURANCE: D.W. Kurtz 25Feb99 | ISSUE NUMBER: 1

QP2

RMAT COR

DESCRIPTION OF NONCONFORMANCE	DISPOSITION	INDIV/ DATE	INSP/DATE

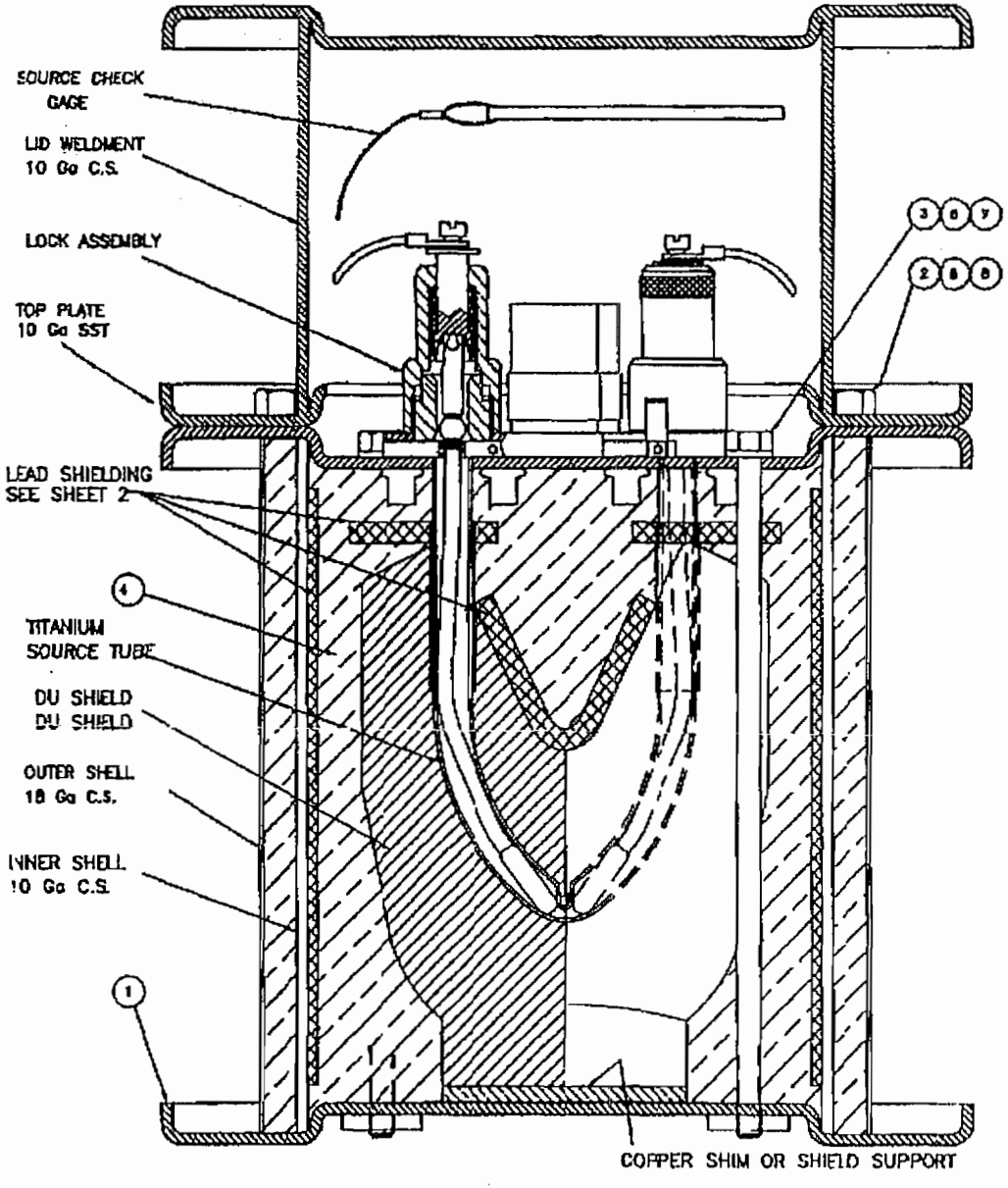

Notes:

1. Refer to Drawing C65009 for construction of original unit.

2. Modify unit as follows:
   a) Remove lid and discard bolts.
   b) Remove through bolts and discard.
   c) If bottom plate is carbon steel, remove existing plate. Patch missing or damaged foam with new Vultafoam., Item (4). Install new stainless steel bottom plate, Item (1).
   d) Install new through bolts, Item (3), with lock washers and install safety wire for security.
   e) Install two (2) dummy source assembly 424-9's, one in each side.

3. Verify marking on new lid bolts, Item (2), is "B8".

4. Install lid with new lid bolts, Item (2), and lock washers, and install seal wire for shipment tamper indicator.

ITEM	QTY	NAME	DESCRIPTION
8	AR		TAMPER PROOF SEAL WIRE
7	AR	WRS032	SAFETY WIRE
6	4		LOCK WASHER 5/16 DIA
5	4		LOCK WASHER, 3/8 DIA.
4	AR	FOM001	VULTAFOAM #16-L-708
3	4	SCR200	HEX HEAD BOLT 5/16-18 X 8 LG. DRILLED HEAD, STAINLESS STEEL 304
2	4	SCR201	HEX HEAD BOLT 3/8-16 X 7/8 LG. DRILLED HEAD, A198 GR B8 CL 2
1	1	C65000-6	BOTTOM PLATE

UNLESS OTHERWISE SPECIFIED:
ALL DIMENSIONS ARE INCHES AND REFERENCE

AEATECHNOLOGY QSA
40 NORTH AVE, BURLINGTON, MA 01803

DESCRIPTIVE DRAWING

FORMAT CORRECTED DDCO#31			
DESCRIPTION	APPROVALS	DATE	LTR
REVISIONS			

TITLE 650L SOURCE CHANGER TEST UNITS

SIZE A | DWG. NO. R-TP80 | SCALE: NONE | SHEET 1 OF 2

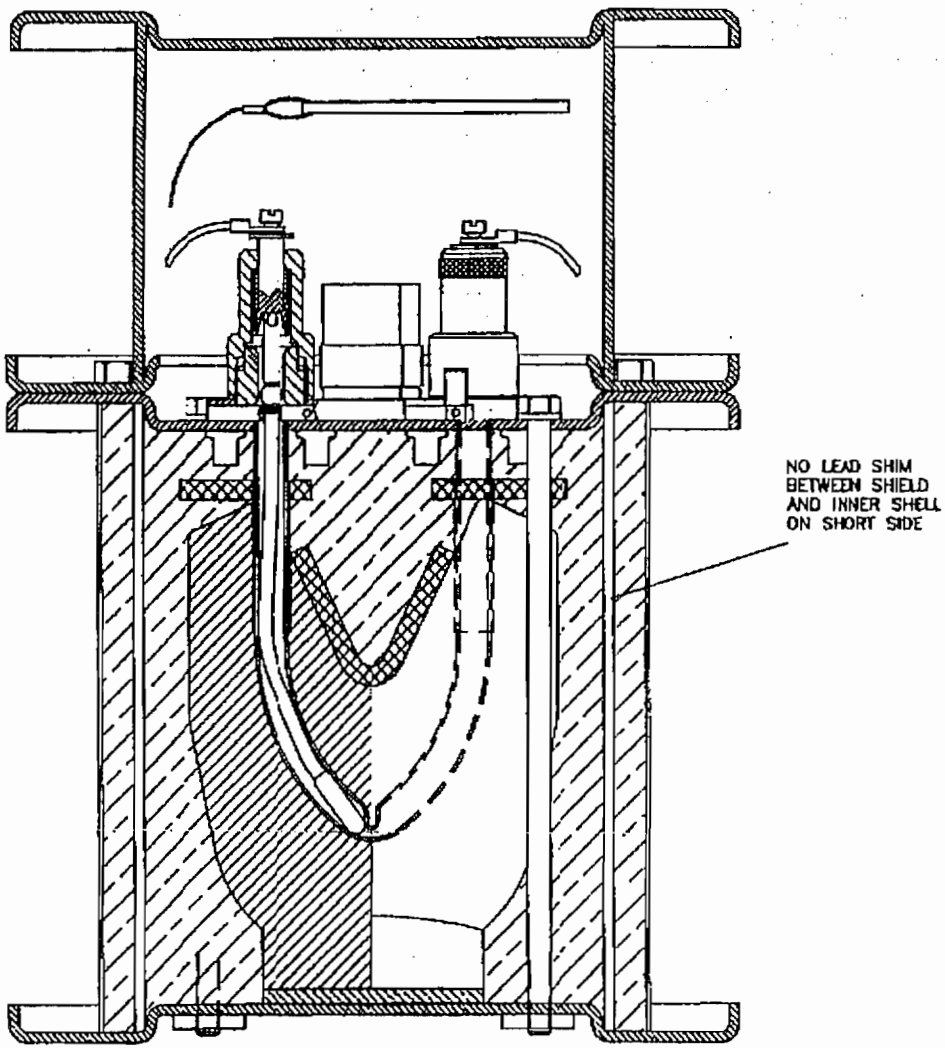

TP 80 (A)

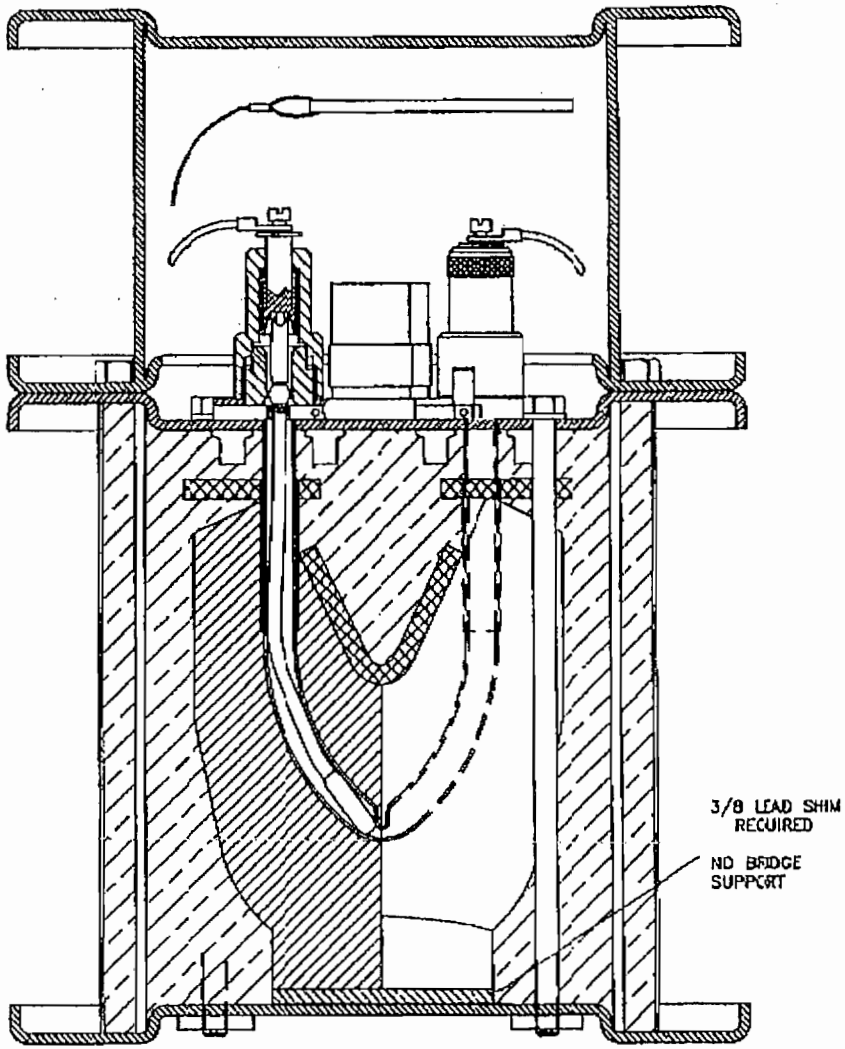

TP 80 (B)

NOTE:
NO SPECIAL REQUIREMENTS
FOR
LEAD LOCATION N TP80(C)

UNLESS OTHERWISE SPECIFIED: ALL DIMENSIONS ARE REFERENCE			
SIZE A	DWG. NO. R—TP80		REV B
	SCALE: NONE	SHEET 2 OF 2	

SENTINEL

TP80 (A) - BEFORE TEST

SHIELDING PROFILE AND INSPECTION FORM

Model: 650L Serial Number: 2243 Radionuclide: IR192 Max.Capacity: 240 Ci

Shield Data		
Shield Heat#:	Mass of Shield: Lbs.	Lot #:

Initial Profile				
Source Model:	Source SN:	Activity: Ci		
Survey Inst.:	SN:	Date Cal.:	Date Due:	
Surface	Observed Intensity mR/hr	Surface Correction Factor		Adjusted Intensity mR/hr
Top			Capacity Correction Factor:	
Right				
Front				
Left				
Rear				
Bottom				
Inspector:	Date:	NCR #:		

Final Profile		
Source Model: 424-9	Source SN: CB9311 131.2ci. C9001 : 124.9ci. Activity: 256.1 Ci	Mass of Device: Lbs.

Survey Inst.: AN/PDR27T	SN: 392402	Date Cal.: 8 Oct 98	Date Due: 8 Oct 99			
Observed Intensity mR/hr					Adjusted Intensity mR/hr	
Surface	At Surface	Surface Corr. Factor	At One Meter		At Surface	At One Meter
Top	90	*N/A	3.5	Capacity Correction Factor: .93	84	3.2
Right	50		.7		47	.6
Front	95		.8		88	.7
Left	60		.7		56	.6
Rear	80		.8		74	.7
Bottom	55		.5		51	.4
Inspector: MAB	Date: 24 Feb 99	NCR #: N/A				

QI6-1/1

Comments: * Per WI-Q09 Worksheet

Amersham QSA

SENTINEL

TP80(B) - BEFORE TEST

SHIELDING PROFILE AND INSPECTION FORM

Model: 650L Serial Number: 182 Radionuclide: IR192 Max.Capacity: 240 Ci

Shield Data

Shield Heat#: _____ Mass of Shield: _____ Lbs. Lot #: _____

Initial Profile

Source Model: _____ Source SN: _____ Activity: _____ Ci

Survey Inst.: _____ SN: _____ Date Cal.: _____ Date Due: _____

Surface	Observed Intensity mR/hr	Surface Correction Factor		Adjusted Intensity mR/hr
Top			Capacity Correction Factor: _____	
Right				
Front				
Left				
Rear				
Bottom				

Inspector: _____ Date: _____ NCR #: _____

Final Profile

Source Model: 424-9 Source SN: C8981-131.2Ci. C9001-124.9Ci Activity: 256.1 Ci Mass of Device: _____ Lbs.

Survey Inst.: AN/PDR-27T SN: SM392402 Date Cal.: 8 Oct 98 Date Due: 8 Oct 99

Surface	Observed Intensity mR/hr: At Surface	Surface Corr. Factor	At One Meter		Adjusted Intensity mR/hr: At Surface	At One Meter
Top	65	*N/A	3.3	Capacity Correction Factor: .93	60	3.1
Right	60		.5		56	.4
Front	MRB 24 Feb 99 ~~85~~ 90		.9		84	.8
Left	95		.7		88	.6
Rear	85		.9		79	.8
Bottom	80		.6		74	.5

Inspector: MRBoyd Date: 24 Feb 99 NCR #: N/A

QI6-1/1

Comments: * Per WI-Q09 Worksheet

Amersham QSA

ENTINEL TP80 (C) - BEFORE TEST

Drop Test Unit

SHIELDING PROFILE AND INSPECTION FORM

Model: 6506 Serial Number: 195 Radionuclide: IR192 Max.Capacity: 240 Ci

Shield Data

Shield Heat#: _____ Mass of Shield: _____ Lbs. Lot #: _____

Initial Profile

Source Model: _____ Source SN: _____ Activity: _____ Ci

Survey Inst.: _____ SN: _____ Date Cal.: _____ Date Due: _____

Surface	Observed Intensity mR/hr	Surface Correction Factor		Adjusted Intensity mR/hr
Top			Capacity Correction Factor: _____	
Right				
Front				
Left				
Rear				
Bottom				

Inspector: _____ Date: _____ NCR #: _____

Final Profile

Source Model: 424-9 Source SN: C8931 = 121.7 ci. C9113 = 105.0 ci. Activity: 226.7 Ci Mass of Device: _____ Lbs.

Survey Inst.: AN/PDR27T SN: SM392402 Date Cal.: 8 Oct 98 Date Due: 8 Oct 99

Surface	Observed Intensity mR/hr: At Surface	Surface Corr. Factor	Observed Intensity mR/hr: At One Meter		Adjusted Intensity mR/hr: At Surface	Adjusted Intensity mR/hr: At One Meter
Top	65	*N/A	2.0	Capacity Correction Factor: 1.10	72	2.2
Right	95		.6		105	.7
Front	45		.5		50	.6
Left	115		.6		127	.7
Rear	45		.5		50	.6
Bottom	55		.5		61	.6

Inspector: MBoyd Date: 4 March 99 NCR #: N/A

QI6-1/1

Comments: * Per WT-009 worksheet
See Attached Doc.

Amersham QSA

APPENDIX C

TEST CHECKLISTS AND DATA SHEETS

Specimen Preparation List

Step		TP80(A)	TP80(B)	TP80(C)
1.	Serial Number:	2243	182	195
2.	Total weight of package (lb):	80.0 lb.	83.6 lb	89.0 lb
3.	Location of simulated source from top plate (in):	(A) 6.318 (B) 6.359	(A) 6.556 (B) 6.430	(A) 6.304 (B) 6.256
4.	Location of lead shielding:	SEE X-RAYS	SEE X-RAYS & ROUTE CARD PKG.	SEE X-RAYS
5.	All fabrication and inspection records documented in accordance with the AEAT QA Program?	(Da) 16 MAR 99	(Da) 16 MAR 99	(Da) 16 MAR 99
6.	Does the unit comply with the requirements of Drawing R-TP80, Revision D?	*	*	*
7.	Has the radiation profile been recorded in accordance with AEAT QSA Work Instruments WI-Q09?	YES (Da)	YES (Da)	YES (Da)
8.	Is the package prepared for transport?	yes (Da)	yes (Da)	yes (Da)

Verified by:	Print Name:	Signature:	Date:
Engineering	NICHOLAS J. MARAINE	[signature]	16 MAR 99
Regulatory Affairs	MARC S. NADEAU	[signature]	16 MAR 99
Quality Assurance	Daniel W. Kurtz	Daniel W. Kurtz	16 MAR 99

*As noted on the Route Cards for the devices, the units were assembled with through bolt torques of 135±5 in-lbs. instead of the 100±5 in-lb torque specified on R-TP80, Rev D. This change was approved by Engineering, Regulatory and QA and was implemented on Rev E of R-TP80.

NJM 16MAR99
DWK 16MAR99
[illegible] 16 MAR 99

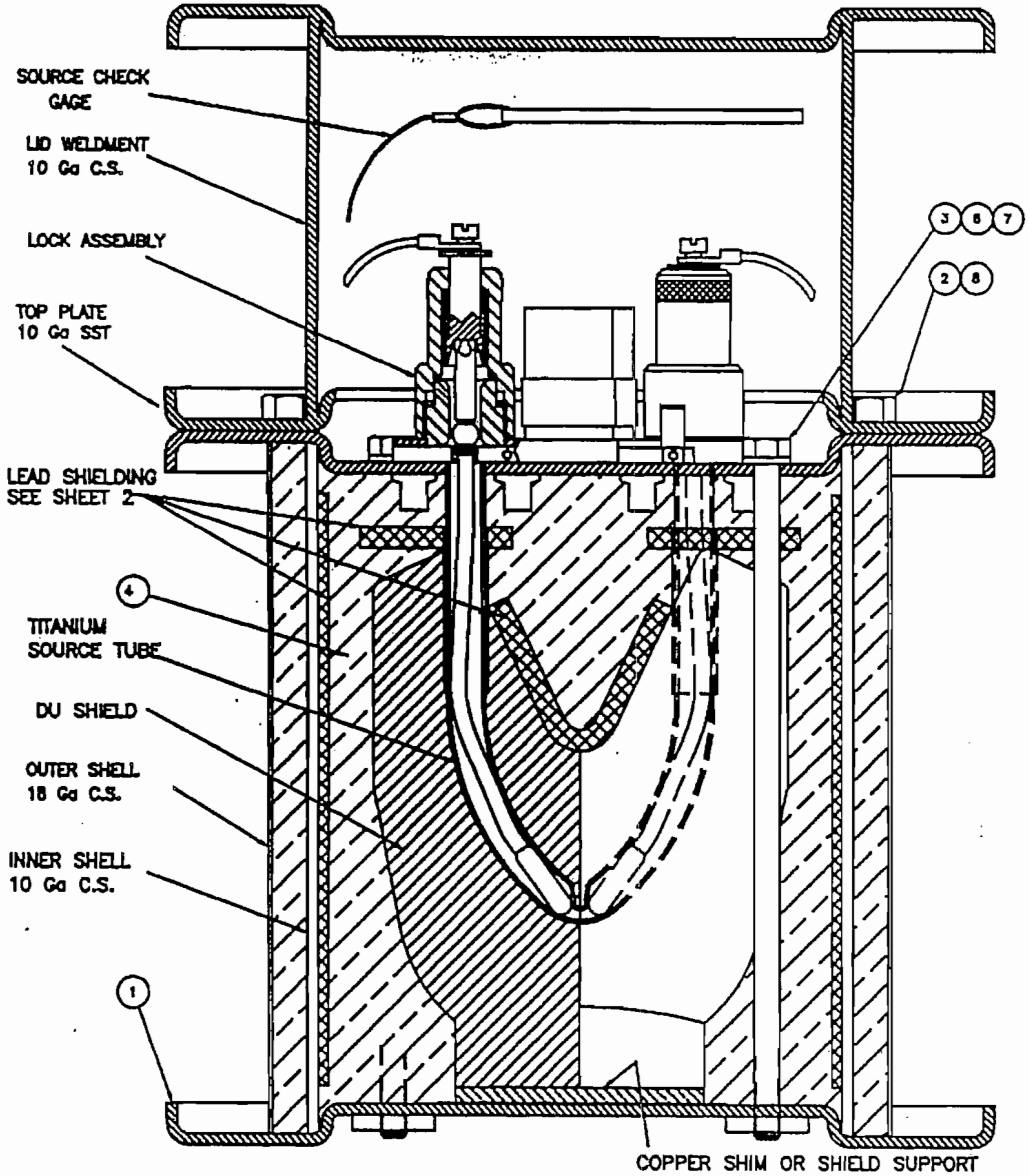

Notes:

1. Refer to Drawing C65009 for construction of original unit.

2. Modify unit as follows:
   a) Remove lid and discard bolts.
   b) Remove through bolts and discard.
   c) If bottom plate is carbon steel, remove existing plate. Patch missing or damaged foam with new Vultafoam., Item (4). Install new stainless steel bottom plate, Item (1).
   d) Install new through bolts, Item (3), with lock washers, torque through bolts to 100±5 in-lbs and install safety wire for security.
   e) Install two (2) dummy source assembly 424-9's, one in each side.

3. Verify marking on new lid bolts, Item (2), is "B8".

4. Install lid with new lid bolts, Item (2), and install seal wire for shipment tamper indicator.

ITEM	QTY	DESCRIPTION
8	AR	TAMPER PROOF SEAL WIRE
7	AR	SAFETY WIRE
6	4	LOCK WASHER 5/16 DIA
4	AR	VULTAFOAM #16-L-708
3	4	HEX HEAD BOLT 5/16-18 X 8 LG. DRILLED HEAD, 300 SERIES (18-8) STAINLESS STEEL
2	4	HEX HEAD BOLT 3/8-16 X 7/8 LG. DRILLED HEAD, A193 GR B8 CL 2
1	1	BOTTOM PLATE

UNLESS OTHERWISE SPECIFIED:
ALL DIMENSIONS ARE INCHES AND REFERENCE

DESCRIPTION	APPROVALS	DATE	LTR
DDCO#33 SEE DDCO	LR / (SD)	12 MAR99	D
DDCO#32 REMOVE LOCK WASHER (ITEM 5)	LR/MT	4MAR99	C
DDCO#31 FORMAT CORRECTED	MT/TL	25FEB99	B

REVISIONS

AEA TECHNOLOGY QSA
40 NORTH AVE, BURLINGTON, MA 01803

DESCRIPTIVE DRAWING

TITLE 650L SOURCE CHANGER TEST UNITS

SIZE A | DWG. NO. R-TP80 | REV D

SCALE: NONE | SHEET 1 OF 2

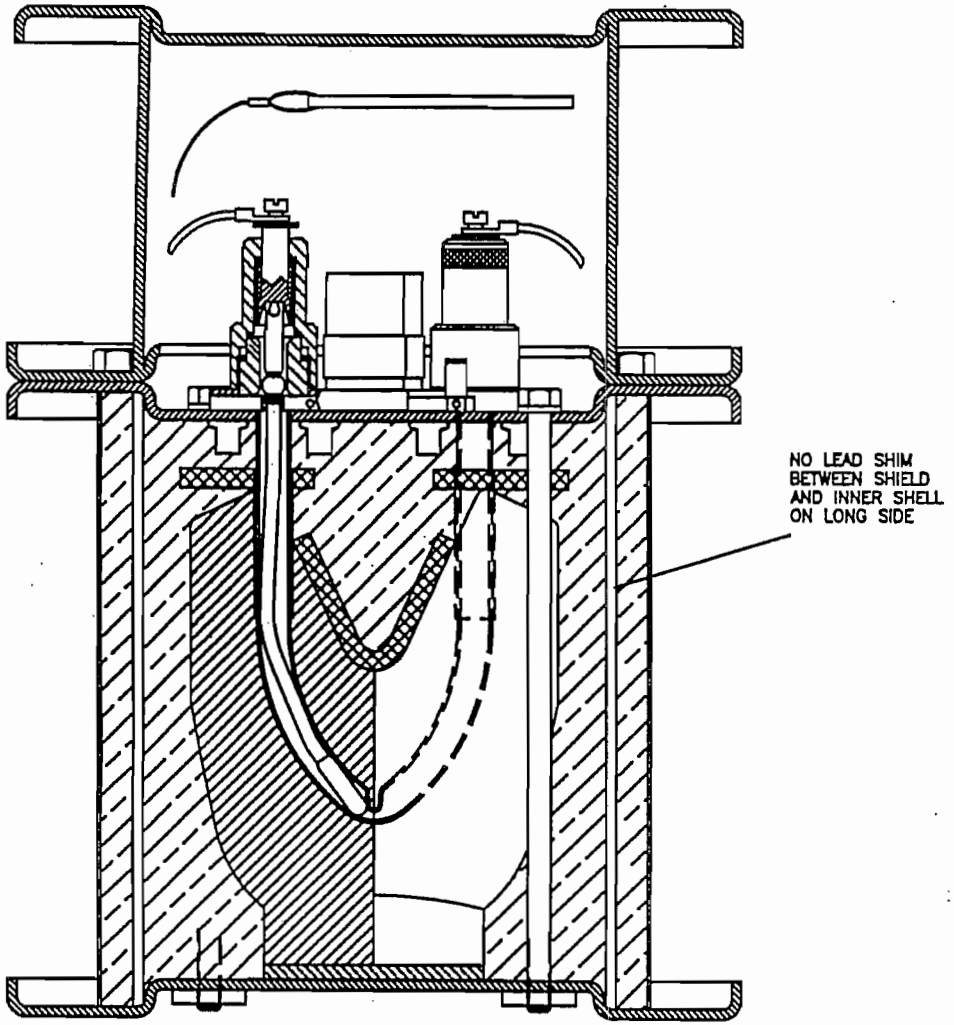

TP 80 (A)

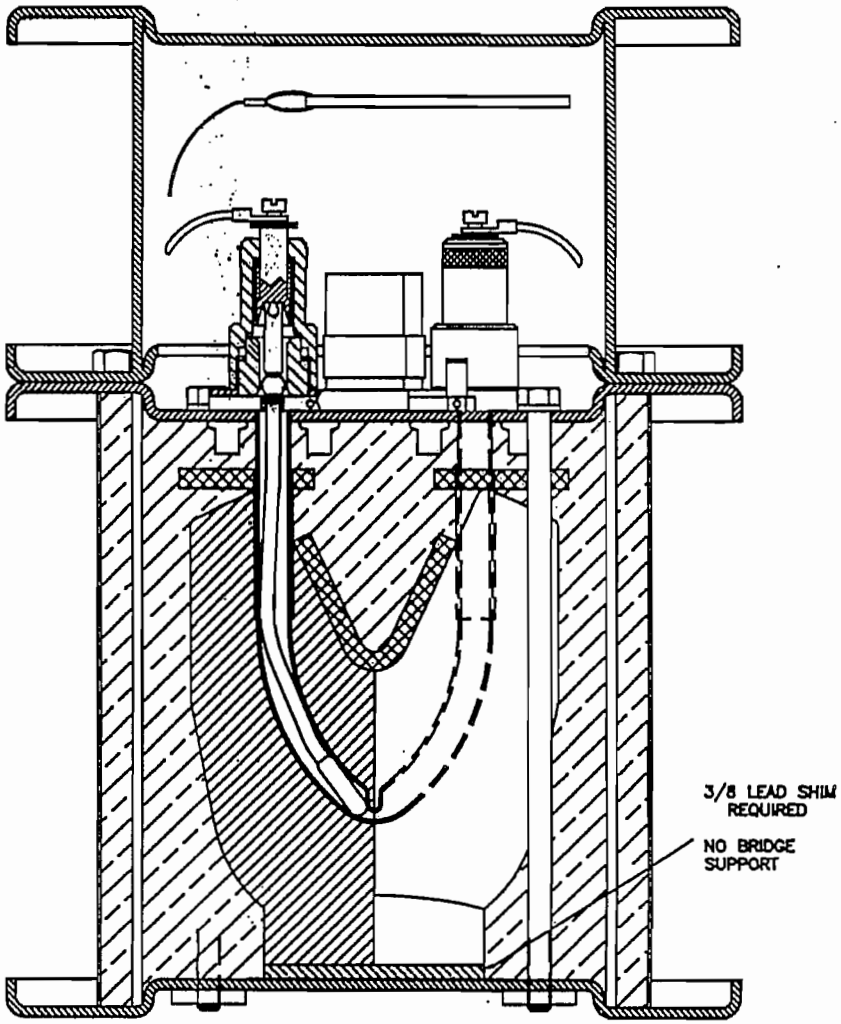

TP 80 (B)

NOTE:
NO SPECIAL REQUIREMENTS
FOR
LEAD LOCATION IN TP80(C)

UNLESS OTHERWISE SPECIFIED: ALL DIMENSIONS ARE REFERENCE			
SIZE A	DWG. NO. R–TP80		REV D
	SCALE: NONE	SHEET 2 OF 2	

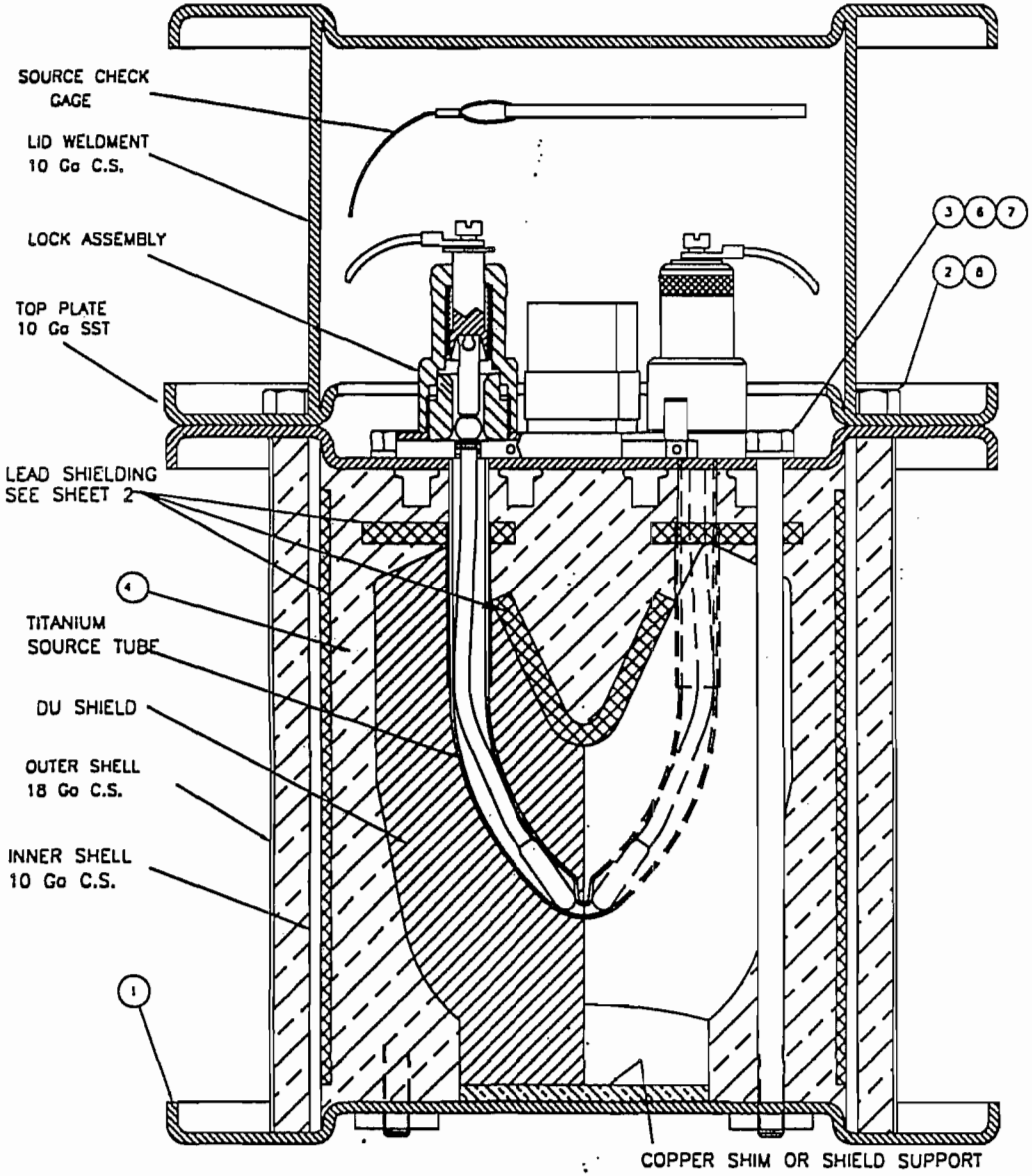

Notes:

1. Refer to Drawing C65009 for construction of original unit.

2. Modify unit as follows:
   a) Remove lid and discard bolts.
   b) Remove through bolts and discard.
   c) If bottom plate is carbon steel, remove existing plate. Patch missing or damaged foam with new Vultafoam., Item (4). Install new stainless steel bottom plate, Item (1).
   d) Install new through bolts, Item (3), with lock washers, torque through bolts to 135±5 in-lbs and install safety wire for security.
   e) Install two (2) dummy source assembly 424-9's, one in each side.

3. Verify marking on new lid bolts, Item (2), is "B8".

4. Install lid with new lid bolts, Item (2), and install seal wire for shipment tamper indicator.

ITEM	QTY	DESCRIPTION
8	AR	TAMPER PROOF SEAL WIRE
7	AR	SAFETY WIRE
6	4	LOCK WASHER 5/16 DIA
4	AR	VULTAFOAM #16-L-708
3	4	HEX HEAD BOLT 5/16-18 X 8 LG. DRILLED HEAD, 300 SERIES (18-8) STAINLESS STEEL
2	4	HEX HEAD BOLT 3/8-16 X 7/8 LG. DRILLED HEAD, A198 GR B8 CL 2
1	1	BOTTOM PLATE

UNLESS OTHERWISE SPECIFIED:
ALL DIMENSIONS ARE INCHES AND REFERENCE

AEATECHNOLOGY QSA
40 NORTH AVE, BURLINGTON, MA 01803

DESCRIPTIVE DRAWING

TITLE 650L SOURCE CHANGER TEST UNITS

SIZE	DWG. NO.	REV
A	R-TP80	E
	SCALE: NONE	SHEET 1 OF 2

DESCRIPTION	APPROVALS	DATE	LTR
DDCO#34 CHANGE TORQUE FROM 100±5 TO 135±5	TL / [illegible]	16MAR99	E
DDCO#33 SEE DDCO	LR/SG	12MAR99	D
DDCO#32 REMOVE LOCK WASHER (ITEM 5)	LR/MT	4MAR99	C
DDCO#31 FORMAT CORRECTED	MT/TL	25FEB99	B

REVISIONS

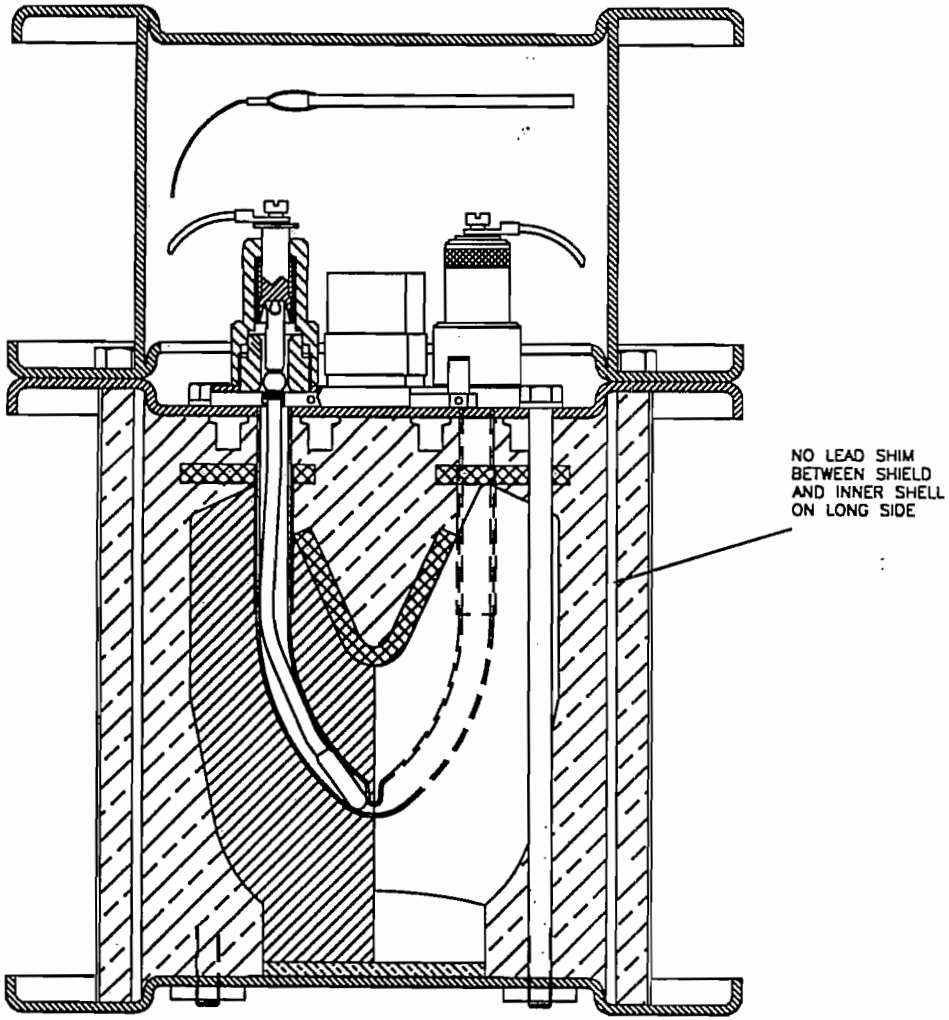

TP 80 (A)

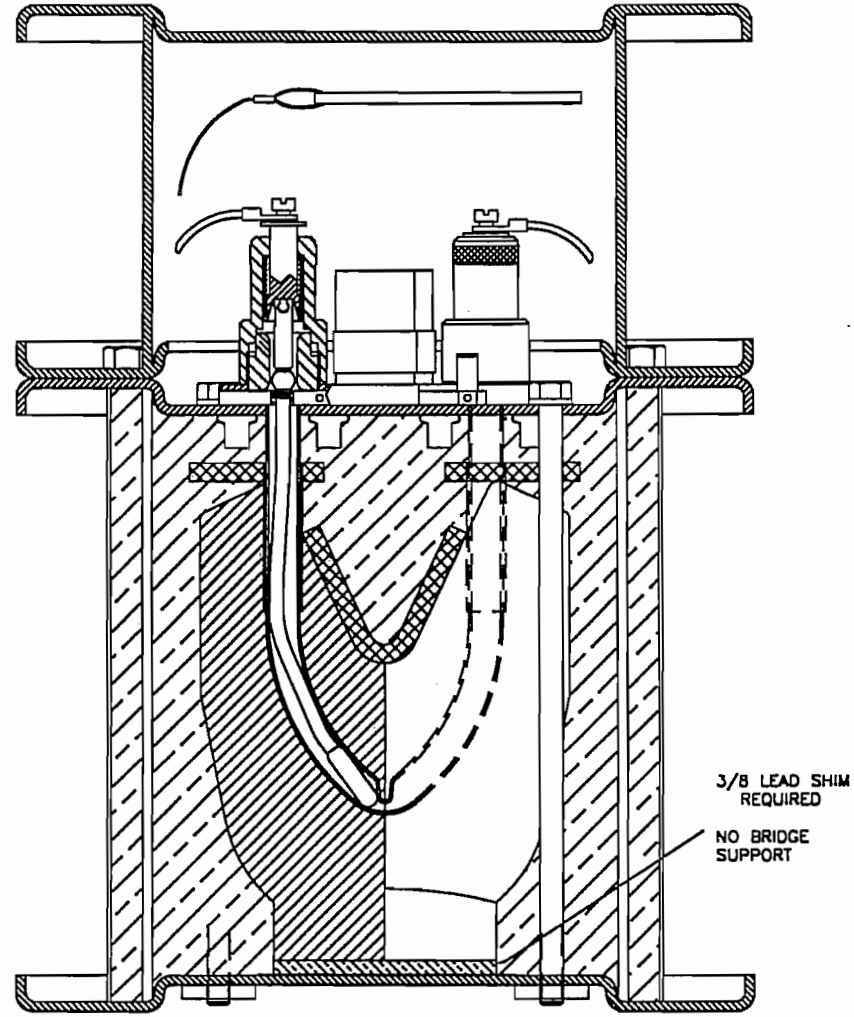

TP 80 (B)

NOTE:
NO SPECIAL REQUIREMENTS
FOR
LEAD LOCATION IN TP80(C)

UNLESS OTHERWISE SPECIFIED: ALL DIMENSIONS ARE REFERENCE			
SIZE A	DWG. NO. R–TP80		REV E
	SCALE: NONE	SHEET 2 OF 2	

Equipment List 1: Compression Test

Description	Enter the Model and Serial Number	Attach Inspection Report or Calibration Certificate
Weight Scale	ASSY-11	DUE 16 MAY 99
Record any additional tools used to facilitate the test and attach the appropriate inspection report or calibration certificate.		
THERMOCOUPLE READER	ENG-12	DUE 8 OCT 99
18" CALIPER	# 236	1 APR 99

	Print Name:	Signature:	Date:
Completed by:	DAVE ANNIS	Dave Annis	15 MAR 99
Verified by:	Nicholas J. Maraio	Nicholas J. MARAIO	15 MAR 99

Checklist 1: Compression Test

Step	TP80(A)	TP80(B)	TP80(C)
1. Position the specimen on concrete surface, per the appropriate drawing.	Figure 2	Figure 2	Figure 2
2. Measure the ambient temperature.	20.5 °C	20.5°C	20.5°C
Note the instrument used:	ENG-12	ENG-12	ENG-12
3. Apply a uniformly distributed weight of 455 to 465 pounds on the top of the lid for a period of 24 hours.	DW 15 MAR 99	DW 15 MAR 99	DW 15 MAR 99
Record the actual weight:	452 lb	458 lb	459 lb
Note the instrument used:	ASY-11	ASY-11	ASY-11
Record start time and date:	7:15 pm 15 MAR 99	7:15 pm 15 MAR 99	7:15 pm 15 MAR 99
4. After 24 hours, remove the weight.	DW 16 MAR 99 7:18 PM	DW	DW
Record end time and date:	16 MAR 99 7:18 PM	16 MAR 99 7:18 PM	16 MAR 99 7:18 PM
5. Measure the ambient temperature.	22°c	22°c	22°c
Note the instrument used:	ENG-12	ENG-12	ENG-12
6. Photograph the test specimen and record any damage on Data Sheet 1.	DW	DW	DW
7. **Engineering, Regulatory Affairs and Quality Assurance** make a preliminary assessment relative to 10 CFR 71. Record the assessment on Data Sheet 1. Determine what changes are necessary in package orientation for the penetration test to achieve maximum damage.	DW 16 MAR 99	DW 16 MAR 99	DW 16 MAR 99

Verified by:	Print Name:	Signature:	Date:
Engineering	Nicholas J. Marawné	Nicholas J. Marawné	16 MAR 99
Regulatory Affairs	Marc S. Nadon	[illegible]	16 MAR 99
Quality Assurance	Daniel W. Kurtz	Daniel W. Kurtz	16 MAR 99

SUPPLEMENTAL SHT. FOR TP80, REV. 1

650L COMPRESSION TEST

TEST WT.: 455 - 465 lb.

TP80(A)	TP80(B)	TP80(C)
PLATE WT. = 14 lb.	PLATE WT. = 13.8 lb.	PLATE WT. = 14 lb.
INGOT WT. = —	INGOT WT. = —	INGOT WT. = —
TOTAL WT. = 462 lb	TOTAL WT. = 458	TOTAL WT. = 459
Dw 15 MAR 99	Dw 15 MAR 99	Dw 15 MAR 99
CRAGE HEIGHT BEFORE COMPRESSION TEST:		
13.367	13.465 IN	13.620 IN
Dw 15 MAR 99	Dw 15 MAR 99	Dw 15 MAR 99
KAGE HEIGHT AFTER COMPRESSION TEST:		
13.365	13.463	13.616
Dw 16 MAR 99	Dw 16 MAR 99	Dw 16 MAR 99

Data Sheet 1: Compression Test

Test Unit Model and Serial Number: 650L S/N 2243 S/N 182 S/N 195		Test Specimen: TP80(A) TP80(B) TP80(C)
Test Date: 15-16MAR99	Test Time: 7:15AM - 7:15PM	Test Plan 80 Step No.: **8.5**

Describe test orientation and setup:
- Cent inputs stacked on top of each unit per Fig 2 of TP80

Describe on-site inspection (damage, broken parts, etc.):
No Damage to units

On-site assessment:
No DAMAGE

Engineering: 16MAR99 Regulatory: 16MAR99 QA: D.W. Kurtz 16MAR99

Describe any post-test disassembly and inspection:
NA

Describe any change in source position:
NA

Describe results of any pre- or post-test radiography:
NA

Completed by:	Date: 16 MAR 99

Equipment List 2: Penetration Test

Description	Enter the Model and Serial Number	Attach Inspection Report or Calibration Certificate
Penetration Bar	Drawing BT10129, Rev. B	See ATTACH
Drop Surface	Drawing AT10122, Rev. B	Do
Thermometer	OMEGA MODEL HH21 # ENG-12	
Thermocouple	OMEGA MODEL# STL-GG-K-20-36	
Thermocouple	OMEGA MODEL# WTK-10-36	
Record any additional tools used to facilitate the test and attach the appropriate inspection report or calibration certificate.		

	Print Name:	Signature:	Date:
Completed by:	DAVE ANNIS	Dave Annis	17 mar 99
Verified by:	Daniel W. Kurtz	D.W. Kurtz	17 mar 99

Checklist 2: Penetration Test

Step	TP80(A)	TP80(B)	TP80(C)
1. Immerse the test specimen in dry ice or cool in freezer as needed to bring specimen temperature below –40°C.	DW	DW	DW
2. Position the package as shown in the referenced figure, or by Step 7, Checklist 1.	Figure 3	Figure 3	Figure 3
3. Begin video recording of the test.	DW	DW	DW
4. Inspect the orientation setup and verify the bar height.	DW	DW	DW
5. Photograph the set-up in at least two perpendicular planes.	DW	DW	DW
6. Measure the ambient temperature and the specimen's internal and surface temperatures. Ensure that the specimen is at the specified temperature.	DW	DW	DW
Record the ambient temperature:	"A" 10°c	9°c	10°c
Note the instrument used:	ENG-12	ENG-12	ENG-12
Record the specimen's internal temperature:	-95°c	-83°c	-90°c
Note the instrument used:	ENG-12	ENG-12	ENG-12
Record the specimen's surface temperature:	-96°c	-93°c	-90°c
Note the instrument used:	ENG-12	ENG-12	ENG-12
7. Drop the penetration bar.	DW	DW	DW
8. Check to ensure that penetration bar hit the specified area.	DW	DW	DW
9. Measure the specimen's surface temp. Ensure that specimen is at specified temp.	-74°c	-62°c	-71°c
Note the instrument used:	ENG-12	ENG-12	ENG-12
10. Photograph the test specimen and record any damage on Data Sheet 2.	DW	DW	DW
11. **Engineering, Regulatory Affairs and Quality Assurance** make a preliminary assessment relative to 10 CFR 71. Record the assessment on Data Sheet 2. Determine what changes are necessary in package orientation for the 1.2 meter (4 foot) free drop to achieve maximum damage.	DW	DW	DW

Verified by:	Print Name:	Signature:	Date:
Engineering	Nicholas S Marrone	[illegible]	17 MAR 99
Regulatory Affairs	MARC S. NADIGAN	[illegible]	17 MAR 99
Quality Assurance	Daniel W. Kurtz	D.W. Kurtz	17 MAR 99

Data Sheet 2: Penetration Test

Test Unit Model and Serial Number: 650L SN 2243		Test Specimen: TP80(A)
Test Date: 17 MAR 99	Test Time: 9:40 AM	Test Plan 80 Step No.: **8.6**

Describe test orientation and setup:
- In accordance with Fig 3 of test Plan

Describe impact (location, rotation, etc.):
- Impact on side of source changer

Describe on-site inspection (damage, broken parts, etc.):
- No damage - small indentation at point of impact

On-site assessment:
- Continue with ~~Test~~ MATRIX planned test sequences and orientations

Engineering: [signature] 17 MAR 99 Regulatory: [signature] 17 MAR 99 QA: D.N. Kurtz 17 MAR 99

Describe any post-test disassembly and inspection:
NP

Describe any change in source position:
NA

Describe results of any pre- or post-test radiography:
NA

Completed by: [signature]	Date: 17 MAR 99

Data Sheet 2: Penetration Test

Test Unit Model and Serial Number: 650L SN 182		Test Specimen: TP80(B)
Test Date: 17 MAR 99	Test Time: 9:50 AM	Test Plan 80 Step No.: **8.6**

Describe test orientation and setup:
IN ACCORDANCE WITH FIGURE 3 OF TEST PLAN

Describe impact (location, rotation, etc.):
IMPACT ON SIDE OF SOURCE CHANGER

Describe on-site inspection (damage, broken parts, etc.):
NO DAMAGE - SMALL INDENTATION AT POINT OF CONTACT

On-site assessment:
CONTINUE WITH PLANNED TEST SEQUENCE AND ORIENTATIONS.

Engineering: 17 MAR 99 Regulatory: 17 MAR 99 QA: D.W. Kurtz 17 MAR 99

Describe any post-test disassembly and inspection:
NA

Describe any change in source position:
NA

Describe results of any pre- or post-test radiography:
NA

Completed by:	Date: 17 MAR 99

Data Sheet 2: Penetration Test

Test Unit Model and Serial Number: 650L SN 195		Test Specimen: TP80 (C)
Test Date: 17 MAR 99	Test Time: 10:01	Test Plan 80 Step No.: **8.6**

Describe test orientation and setup:

IN ACCORDANCE WITH FIGURE 3 OF TEST PLAN.

Describe impact (location, rotation, etc.):

IMPACT ON SIDE OF SOURCE CHANGER

Describe on-site inspection (damage, broken parts, etc.):

NO DAMAGE - SMALL INDENTATION AT POINT OF CONTACT.

On-site assessment:

CONTINUE WITH PLANNED TEST SEQUENCE AND ORIENTATIONS.

Engineering: [signature] 17 MAR 99 Regulatory: [signature] 17 MAR 99 QA: D. N. Kurtz 17 MAR 99

Describe any post-test disassembly and inspection:

NA

Describe any change in source position:

NA

Describe results of any pre- or post-test radiography:

NA

Completed by: [signature]	Date: 17 MAR 99

Equipment List 3: 1.2 Meter (4 Foot) Free Drop

Description	Enter the Model and Serial Number	Attach Inspection Report or Calibration Certificate
Drop Surface	Drawing AT10122, Rev. B	SEE ATTACH
Thermometer	OMEGA EHG-12	↓
Thermocouple	OMEGA 5TC-GG-K-20-36	↓
Thermocouple	OMEGA WTK-10-36	↓
Record any additional tools used to facilitate the test and attach the appropriate inspection report or calibration certificate.		

	Print Name:	Signature:	Date:
Completed by:	DAVE ANNIS	[signature]	17 MAR 99
Verified by:	Daniel W. Kurtz	D.W. Kurtz	17 MAR 99

Checklist 3: 1.2 Meter (4 Foot) Free Drop

Step	TP80(A)	TP80(B)	TP80(C)
1. Immerse specimen in dry ice or cool in freezer to bring specimen below –40°C.	DW	DW	DW
2. Measure the ambient temperature.	13°c	13°c	13°c
Note the instrument used:	ENG-12	ENG-12	ENG-12
3. Attach the test specimen to the release mechanism.	DW	DW	DW
4. Begin video recording of the test.	DW	DW	DW
5. Measure specimen internal and surface temps. Ensure specimen is at specified temp.	DW	DW	DW
Record the specimen's internal temperature:	-90°c	-89°c	-92°c
Note the instrument used:	ENG-12	ENG-12	ENG-12
Record the specimen's surface temperature:	-92°c	-87°c	-95°c
Note the instrument used:	ENG-12	ENG-12	ENG-12
6. Lift and orient the test specimen as shown in the specified referenced figure.	Figure 4	Figure 5	Figure 6
7. Inspect the orientation setup and verify drop height.	DW	DW	DW
8. Photograph the set-up in at least two perpendicular planes.	DW	DW	DW
9. Release the test specimen.	DW	DW	DW
10. Measure specimen internal and surface temps. Ensure specimen is at specified temp.	DW	DW	DW
Record the specimen's internal temperature:	-71°c	-53°c	-90°c
Note the instrument used:	DW ENG-12	ENG-12	ENG-12
Record the specimen's surface temperature:	-76°c	-90°c	-61°c
Note the instrument used:	ENG-12	ENG-12	ENG-12
11. Photograph the test specimen and record any damage on Data Sheet 3.	DW	DW	DW
12. Measure and record a radiation profile of the test specimen in accordance with AEAT/QSA Work Instruction WI-Q09.	DW	DW	DW
13. **Engineering, Regulatory Affairs and Quality Assurance** make a preliminary assessment relative to 10 CFR 71, and record on Data Sheet 3. Determine package orientation for the 9 meter free drop to achieve maximum damage.	DW	DW	DW

Verified by:	Print Name:	Signature:	Date:
Engineering	Nick Marrone	Nicholas J. Marrone	17 MAR 99
Regulatory Affairs	MARC D. NASSAU 17-Mar-99		17 MAR 99
Quality Assurance	Daniel W. Kurtz	D.W. Kurtz	17 March 99

Data Sheet 3: 1.2 Meter (4 Foot) Free Drop

Test Unit Model and Serial Number: 650L SN 2243		Test Specimen: TP80 (A)
Test Date: 17 MAR 99	Test Time: 10:15 AM	Test Plan 80 Step No.: 8.7

Describe drop orientation and drop height:
HORIZONTAL - LONG SIDE DOWN. HEIGHT OF DROP WAS 1.2 m

Describe impact (location, rotation, etc.):
IMPACT FLAT AS SHOWN IN FIGURE 4

Describe on-site inspection (damage, broken parts, etc.):
IMPACT WITNESS MARKS ON BOTTOM PLATE, TOP PLATE AND BOTH LID FLANGES.
NO DAMAGED OR BROKEN PARTS.

On-site assessment:
CONTINUE WITH PLANNED TEST SEQUENCE AND ORIENTATIONS.

Engineering: [signature] 17 MAR 99 Regulatory: [signature] 17 MAR 99 QA: D.N. Kurtz 17 MAR 99

Describe any post-test disassembly and inspection:
- LID REMOVED TO ALLOW FOR PAINTING OF DEVICE, NO DAMAGE TO TOP PLATE/LOCKING ASSEMBLIES WAS OBSERVED
- LOCK ASSEMBLIES REMAIN FUNCTIONAL

Describe any change in source position:
(A) 6.295 after drop vs. 6.318 before drop
(B) 6.375 after drop vs. 6.359 before drop
} No change within the accuracy of the measurement

Describe results of any pre- or post-test radiography:
NA

Completed by: [signature]	Date: 17 MAR 99

Data Sheet 3: 1.2 Meter (4 Foot) Free Drop

Test Unit Model and Serial Number: 650L SN 182		Test Specimen: TP80(B)
Test Date: 17 MAR 99	Test Time: 10:30 AM	Test Plan 80 Step No.: 8.7

Describe drop orientation and drop height:

~~HORIZONTAL - LONG SIDE DOWN~~ - HEIGHT OF DROP WAS 1.2 m
FLAT ON TOP DWK 17MAR99

Describe impact (location, rotation, etc.):

IMPACT FLAT ON TOP OF LID - VERTICAL UPSIDE DOWN AS SHOWN IN FIGURE 5

Describe on-site inspection (damage, broken parts, etc.):

IMPACT WITNESS MARKS ON TOP OF LID. NO DAMAGE OBSERVED.

On-site assessment:

CONTINUE WITH PLANNED TEST SEQUENCE AND ORIENTATIONS.

Engineering: [signature] 17 MAR 99 Regulatory: [signature] 17 MAR 99 QA: D.W. Kurtz 17 MAR 99

Describe any post-test disassembly and inspection:

- LID REMOVED TO ALLOW FOR PADDLING OF DEVICE - NO DAMAGE TO TOP PLATE/LOCKING ASSEMBLY WAS OBSERVED
- LOCK ASSEMBLIES REMAIN FUNCTIONAL

Describe any change in source position:

(A) 6.533 after drop vs 6.556 before drop
(B) 6.348 after drop vs 6.430 before drop

} NO CHANGE - Measurements unchanged within the accuracy of the measurement technique

Describe results of any pre- or post-test radiography:

NA

Completed by: [signature]	Date: 17 MAR 99

Data Sheet 3: 1.2 Meter (4 Foot) Free Drop

Test Unit Model and Serial Number: 650L SN 195		Test Specimen: TP80 (C)
Test Date: 17MAR99	Test Time: 10:45	Test Plan 80 Step No.: **8.7**

Describe drop orientation and drop height:
TOP CORNER DOWN - HEIGHT OF DROP WAS 1.2 m

Describe impact (location, rotation, etc.):
IMPACT ON CORNER OF LID TOP.

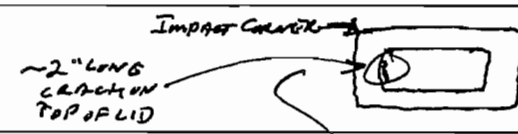

Describe on-site inspection (damage, broken parts, etc.):
IMPACT WITNESS MARKS ON TOP CORNER OF LID. FLANGE BENT OVER AT IMPACT POINT. APPROX. 2" CRACK OBSERVED ON TOP OF LID AS SHOWN IN SKETCH. No damage observed on lid bolts OR RIVNUTS.

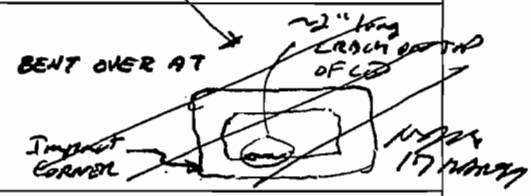

On-site assessment:
CONTINUE WITH PLANNED TEST SEQUENCE AND ORIENTATIONS

Engineering: NJ Marry 17MAR99 Regulatory: [signature] 17MAR99 QA: D.W. Kurtz 17MAR99

Describe any post-test disassembly and inspection:
- LID REMOVED TO ALLOW FOR PADDING OF DEVICE - NO DAMAGE TO TOP PLATE/LOCKING ASSEMBLIES WAS OBSERVED
- Lock Assemblies Remain Functional

Describe any change in source position:
(A) 6.328 after drop vs 6.304 before drop
(B) 6.291 after drop vs 6.256 before drop
} No change - Measurements unchanged within the accuracy of the measurement technique

Describe results of any pre- or post-test radiography:
NA

Completed by: NJ Marry	Date: 17 MAR 99

SENTINEL TP80(A) - AFTER 1.2M (4 FOOT) DROP TEST

DROP TEST UNIT

SHIELDING PROFILE AND INSPECTION FORM

odel: 650L Serial Number: 2243 Radionuclide: IR192 Max.Capacity: 240 Ci

Shield Data

Shield Heat#:	Mass of Shield: Lbs.	Lot #:

Initial Profile

ource Model: Source SN: Activity: Ci

urvey Inst.: SN: Date Cal.: Date Due:

Surface	Observed Intensity mR/hr	Surface Correction Factor		Adjusted Intensity mR/hr
op			Capacity Correction Factor:	
ight				
ront				
eft				
ear				
ottom				

nspector: Date: NCR #:

Final Profile

ource Model: 424-9 Source SN: C9232 – 94.8 ci. C8931 – 107.8 Activity: 202.6 Ci Mass of Device: Lbs.

urvey Inst.: AN/PDR27T SN: SM 392402 ~~392404~~ Date Cal.: 8 Oct 98 Date Due: 8 Oct 99

MBB 13 Apr. 99

Surface	Observed Intensity mR/hr: At Surface	Observed Intensity mR/hr: Surface Corr. Factor	Observed Intensity mR/hr: At One Meter		Adjusted Intensity mR/hr: At Surface	Adjusted Intensity mR/hr: At One Meter
op	80	* N/A	2.0	Capacity Correction Factor: 1.18	94	2.4
ight	40		.6		47	.7
ront	75		.7		89	.8
eft	55		.6		65	.7
ear	75		.7		89	.8
ottom	80		.6		94	.7

nspector: MBoyd Date: 17 March 99 NCR #: N/A

Q16-1/1

mments: * Per WI-Q09 Worksheet

Amersham QSA

SENTINEL TP80(B) - AFTER 1.2M (4 FOOT) DROP TEST

DROP TEST UNIT

SHIELDING PROFILE AND INSPECTION FORM

Model: 650L Serial Number: 182 Radionuclide: IR192 Max.Capacity: 240 Ci

Shield Data

Shield Heat#: _____ Mass of Shield: _____ Lbs. Lot #: _____

Initial Profile

Source Model: _____ Source SN: _____ Activity: _____ Ci

Survey Inst.: _____ SN: _____ Date Cal.: _____ Date Due: _____

Surface	Observed Intensity mR/hr	Surface Correction Factor		Adjusted Intensity mR/hr
Top			Capacity Correction Factor: _____	
Right				
Front				
Left				
Rear				
Bottom				

Inspector: _____ Date: _____ NCR #: _____

Final Profile

Source Model: 424-9 Source SN: C8931-107.8 C9252-94.8 ci. Activity: 202.6 Ci Mass of Device: _____ Lbs.

Survey Inst.: AN/PDR27T SN: SM392402 ~~SM392404~~ MRB 13Apr99 Date Cal.: 8Oct98 Date Due: 8Oct99

Surface	Observed Intensity mR/hr: At Surface	Surface Corr. Factor	At One Meter		Adjusted Intensity mR/hr: At Surface	At One Meter
Top	60	*N/A	1.7	Capacity Correction Factor: 1.18	71	2.0
Right	45		.5		53	.6
Front	70		.7		83	.8
Left	70		.5		83	.6
Rear	65		.7		77	.8
Bottom	70		.6		83	.7

Inspector: MRBoyd Date: 17March99 NCR #: N/A

Q16-1/1

Comments: * Per WI-Q09 worksheet

Amersham QSA

SENTINEL TP80(c) - AFTER 1.2M (4 FOOT) DROP TEST

DROP TEST UNIT

SHIELDING PROFILE AND INSPECTION FORM

odel: 650L Serial Number: 195 Radionuclide: IR192 Max.Capacity: 240 Ci

Shield Data

Shield Heat#: _____ Mass of Shield: _____ Lbs. Lot #: _____

Initial Profile

Source Model: _____ Source SN: _____ Activity: _____ Ci

Survey Inst.: _____ SN: _____ Date Cal.: _____ Date Due: _____

Surface	Observed Intensity mR/hr	Surface Correction Factor		Adjusted Intensity mR/hr
Top			Capacity Correction Factor: _____	
Right				
Front				
Left				
Rear				
Bottom				

Inspector: _____ Date: _____ NCR #: _____

Final Profile

Source Model: 424-9 Source SN: C9232 – 94.8 ci. C8931 – 107.8 Activity: 202.6 Ci Mass of Device: _____ Lbs.

Survey Inst.: AN/PDR27T SN: ~~SIM 391204~~ 392402 MDB 13 Apr 99 Date Cal.: 8 Oct 98 Date Due: 8 Oct 99

Surface	Observed Intensity mR/hr: At Surface	Surface Corr. Factor	Observed Intensity mR/hr: At One Meter		Adjusted Intensity mR/hr: At Surface	Adjusted Intensity mR/hr: At One Meter
Top	50	*N/A	1.7	Capacity Correction Factor: 1.18	59	2.0
Right	60		.6		71	.7
Front	40		.4		47	.5
Left	90		.7		106 ~~53~~	.8
Rear	45		.5		MDB 17 March 99 53	.6
Bottom	50		.4		59	.5

Inspector: MDBgd Date: 17 March 99 NCR #: N/A

Q16-1/1

Comments: * Per WI-Q09 Worksheet

Amersham QSA

Equipment List 4: 9 Meter (30 Foot) Free Drop

Description	Enter the Model and Serial Number	Attach Inspection Report or Calibration Certificate
Drop Surface	Drawing AT10122, Rev. B	SEE ATTACH DW
Thermometer	OMEGA HH21 ENG-12	
Thermocouple	OMEGA 5TC-GG-K-20-36	
Thermocouple	OMEGA WTK-10-36	
Record any additional tools used to facilitate the test and attach the appropriate inspection report or calibration certificate.		

	Print Name:	Signature:	Date:
Completed by:	DAVE ANNIS	Dave Annis	18 Mar 99
Verified by:	Daniel W. Kurtz	D.W. Kurtz	18 Mar 99

Checklist 4: 9 Meter (30 Foot) Free Drop

Step	TP80(A)	TP80(B)	TP80(C)
1. Immerse test specimen in dry ice or cool in freezer to bring specimen temperature below –40°C.	Dw	Dw	Dw
2. Measure the ambient temperature.	11°c	13°c	15°c
Note the instrument used:	ENG-12	ENG-12	ENG-12
3. Attach the test specimen to the release mechanism.	Dw	Dw	Dw
4. Begin Video Recording of the test.	Dw	Dw	Dw
5. Measure specimen's internal and surface temps. Ensure specimen is at the specified temperature.	Dw	Dw	Dw
Record the specimen's internal temperature:	NOTE ①	-94°c	-97°c
Note the instrument used:	ENG-12	ENG-12	ENG-12
Record the specimen's surface temperature:	-92°c	-93°c	-98°c
Note the instrument used:	ENG-12	ENG-12	ENG-12
6. Lift and orient the test specimen as shown in the specified referenced figure.	Figure 7	Figure 8	Figure 9
7. Inspect the orientation setup and verify drop height.	Dw	Dw	Dw
8. Photograph the setup in at least two perpendicular planes.	Dw	Dw	Dw
9. Release the test specimen.	Dw	Dw	Dw
10. Measure specimen's internal and surface temps. Ensure specimen is at specified temperature.	Dw	Dw	Dw
Record the specimen's internal temperature:	-92°c	-94°c	-94°c
Note the instrument used:	ENG-12	ENG-12	ENG-12
Record the specimen's surface temperature:	-54°c	-69°c	-64°c
Note the instrument used:	ENG-12	ENG-12	ENG-12
11. Photograph the test specimen and record any damage on Data Sheet 4.	Dw	Dw	Dw
12. **Engineering, Regulatory Affairs and Quality Assurance** make a preliminary assessment relative to 10 CFR 71. Record assessment on Data Sheet 4. Determine what changes are necessary in package orientation for the puncture test to achieve maximum damage.	Dw	Dw	Dw

Verified by:	Print Name:	Signature:	Date:
Engineering	Nick Marroni	N Marroni	18 MAR99
Regulatory Affairs	Marc S. Nadeau	[illegible]	18 MAR99
Quality Assurance	Daniel W. Kurtz	D.W. Kurtz	18 March 99

① ATC UNIT READING -93°c

Data Sheet 4: 9 Meter (30 Foot) Free Drop

Test Unit Model and Serial Number: 650L SN 2243		Test Specimen: TP80(A)
Test Date: 18 MAR 99	Test Time: 9:45	Test Plan 80 Step No.: **8.9**

Describe drop orientation and drop height:
HORIZONTAL LONG SIDE DOWN FROM 30 ft

Describe impact (location, rotation, etc.):
- PACKAGE ROTATED SLIGHTLY DURING DROP - EDGE OF BOTTOM PLATE STRUCK FIRST (IMPACT ON LONG EDGE OF PLATE)

Describe on-site inspection (damage, broken parts, etc.):
- LONG EDGE OF BOTTOM PLATE DEFORMED (NO CRACKING OBSERVED); WITNESS MARKS ON EDGE OF TOP PLATE AND BOTTOM LID FLANGE - SMALL DEFORMATION OF LID TOP FLANGE
- DEFORMATION OF OUTER SHELL AT INTERFACE WITH BOTTOM ~~FLANGE~~ PLATE (WHERE BOTTOM PLATE DEFORMED)

On-site assessment:
- CONTINUE WITH PLANNED DROP SEQUENCE AND ORIENTATION

Engineering: [signature] 18MAR99 Regulatory: [signature] 18MAR99 QA: D.W. Kurtz 18MAR99

Describe any post-test disassembly and inspection:
NA

Describe any change in source position:
NA

Describe results of any pre- or post-test radiography:
NA

Completed by: [signature]	Date: 18 MAR 99

Data Sheet 4: 9 Meter (30 Foot) Free Drop

Test Unit Model and Serial Number: 650L SN 182		Test Specimen: TP80(B)
Test Date: 18 MAR 99	Test Time: 10:30	Test Plan 80 Step No.: **8.9**

Describe drop orientation and drop height:
- VERTICAL UPSIDE DOWN FROM 30 ft

Describe impact (location, rotation, etc.):
- Impact was flat on top

Describe on-site inspection (damage, broken parts, etc.):
- One Rivnut broken - Lid bolt still holding - No other ~~damaged~~ NM damage to lid bolts
- No damage to lid (only witness marks on top
- SS over wrap (i.e. label) unzipped and opened up
- CS Outer shell (18 gage) unzipped along SST weld line and opened up ~1½"

On-site assessment:
- FOAM CRACKED SEVERAL SMALL PIECES CAME OUT
- CS INNERSHELL (10 gage) (in middle of short side) FAILED (BRITTLE FRACTURE) - opened CRACK ~ 3" High; ~½ WIDE; ~~Also~~ NM AT THIS CRACK STARTS AT TOP END - AT BOTTOM OF THIS OPENING THE CRACK TURNS AND CONTINUES BEHIND FOAM
- FOAM BEHIND INNER SHELL CRACKED

* SEE BELOW
Engineering: [signature] 19 MAR 99 Regulatory: [signature] 18 MAR 99 QA: D. W. Kurtz 18 MAR 99

Describe any post-test disassembly and inspection:
NA

Describe any change in source position:
NA

Describe results of any pre- or post-test radiography:
NA

Completed by: [signature]	Date: 18 MAR 99

* CHANGE PUNCTURE BAR DROP ORIENTATION FROM UNDERSIDE OF TOP PLATE TO HORIZONTAL WITH IMPACT TO OPEN AXIAL CRACK.
- PROCEED WITH PUNCTURE BAR DROP

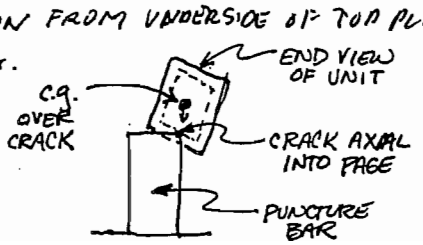

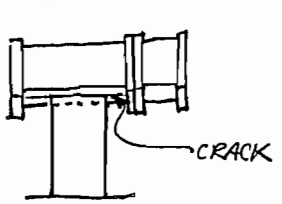

Data Sheet 4: 9 Meter (30 Foot) Free Drop

Test Unit Model and Serial Number: 650L SN 195		Test Specimen: TP 80 (C)
Test Date: 18 MAR 99	Test Time: 11:20	Test Plan 80 Step No.: **8.9**

Describe drop orientation and drop height:
TOP CORNER DOWN FROM 30 ft

Describe impact (location, rotation, etc.):
IMPACT ON TOP CORNER OF LID

Describe on-site inspection (damage, broken parts, etc.):
- TOP PLATE OF LID CRACKED (BRITTLE FAILURE) IN VICINITY OF IMACT POINT. TOP SURFACE LID DEFLECTED INTO "COLUMN" SECTION OF LID ~½" - COLUMN SECTION AND BOTTOM FLANGE OF LID INTACT
- NO DAMAGE TO LID BOLTS OR RIVNUTS - BOTTOM PLATE DEFORMED AT CORNER (HIT ON BOUNCE)

On-site assessment:
- CHANGE PUNCTURE BAR DROP ORIENTATION FROM HIT ON BOTTOM PLATE TO IMPACT ON TOP OF LID TO TRY TO GET TO LOCKS.
- PROCEED W/ PUNCTURE BAR DROP

Engineering: [signature] 18MAR99 Regulatory: [signature] 18MAR99 QA: D.W. Kurtz 18MAR99

Describe any post-test disassembly and inspection:
NA

Describe any change in source position:
NA

Describe results of any pre- or post-test radiography:
NA

Completed by: [signature]	Date: 18 MAR 99

Equipment List 5: Puncture Test

Description	Enter the Model and Serial Number	Attach Inspection Report or Calibration Certificate
Drop Surface	Drawing AT10122, Rev. B	DW SEE ATTACH
Puncture Billet	Drawing CT10119, Rev. C	
Thermometer	OMEGA HH21 ENG-12	
Thermocouple	OMEGA 5TC-GG-K-20-36	
Thermocouple	OMEGA WTK-10-36	
Record any additional tools used to facilitate the test and attach the appropriate inspection report or calibration certificate.		

	Print Name:	Signature:	Date:
Completed by:	DAVE ANNIS	[signature]	18 MAR 99
Verified by:	Daniel W. Kurtz	D.W. Kurtz	18 MAR 99

Checklist 5: Puncture Test

Step	TP80(A)	TP80(B)	TP80(C)	TP80(C) 2nd ORIENTATION
1. Immerse specimen in dry ice or cool in freezer to bring specimen temp. below –40°C.	Dw	Dw	Dw	Dw
2. Measure the ambient temperature.	15°c / 15c	18°c	15°c	15°c
Note the instrument used:	ENG-12	ENG-12	ENG-12	ENG-12
3. Attach the test specimen to the release mechanism.	Dw	Dw	Dw	Dw
4. Begin Video Recording of the test.	Dw	Dw	Dw NOTE *	Dw
5. Measure specimen's internal and surface temps. Ensure that specimen is at specified temp.	Dw	Dw	Dw	Dw
Record the specimen's internal temperature: ② -81°c	-87°c / -81	-83°c	-83°c	-80°c
Note the instrument used:	ENG-12	ENG-12	ENG-12	ENG-12
Record the specimen's surface temperature: ② -46°c	-69°c	-57°c	-53°c	-47°c
Note the instrument used:	ENG-12	ENG-12	ENG-12	ENG-12
6. Lift and orient the test specimen as shown in the specified referenced figure, or as determined during the assessment of the 9 Meter (30 Foot) Drop Test.	Figure 10	Figure 11	Figure 12	
			Dw	Dw
7. Inspect the orientation setup and verify drop height.	Dw	Dw	Dw	Dw
8. Photograph the set-up in at least two perpendicular planes.	Dw	Dw	Dw	Dw
9. Release the test specimen.	Dw	Dw	Dw	Dw
10. Measure the specimen's internal and surface temperatures.	Dw	Dw	Dw	Dw
Record the specimen's internal temperature: ② -79°c	-88°c	-82°c	-81°c	-70°c
Note the instrument used:	ENG-12	ENG-12	ENG-12	ENG-12
Record the specimen's surface temperature: ② -42°c	-26°c	-44°c	-50°c	-37°c
Note the instrument used:	ENG-12	ENG-12	ENG-12	ENG-12
11. Photograph the test specimen and record any damage on Data Sheet 5.	Dw	Dw	Dw	
12. **Engineering, Regulatory Affairs and Quality Assurance** make a preliminary assessment relative to 10 CFR 71. Record assessment on Data Sheet 5. Determine what changes are necessary in package orientation for thermal test to achieve maximum damage.	Dw	Dw	Dw	

Verified by:	Print Name:	Signature:	Date:
Engineering	Nick Marasné	Nicholas J. Marasné	18 MAR 99
Regulatory Affairs	Marc S. Nadeau	[illegible]	18 MAR 99
Quality Assurance	Daniel W. Kurtz	D.W. Kurtz	18 March 99

* TEST SIGN WAS FOR "B" UNIT, NOT "C"

Data Sheet 5: Puncture Test

Test Unit Model and Serial Number: 650L SN 2243		Test Specimen: TP80(A)
Test Date: 18 MAR 99	Test Time: 12:05	Test Plan 80 Step No.: **8.10**

Describe drop orientation and drop height:
HORIZONTAL LONG SIDE ONTO PUNCHING BAR FROM 4 ft

Describe impact (location, rotation, etc.):
IMPACT ON LONG SIDE OF PACKAGE

Describe on-site inspection (damage, broken parts, etc.):
- WITNESS MARK ON TOP PLATE FLANGE
- SMALL DENT ON SIDE JUST ABOVE BOTTOM PLATE
- NO DAMAGE TO LID BOLTS OR RIVNUTS

On-site assessment:
- PACKAGE INTACT - NO DAMAGE TO LID
- NOTE: LID TEMP AFTER DROP ~~36°C~~ 26°C (i.e. below 40°C) - Therefore drop 2nd TIME IN SAME ORIENTATION
  - 2nd DROP HIT ON LONG SIDE - IMPACT ~~AREA~~ RESULTED IN DENT ON SIDE OF PACKAGE - NO OTHER DAMAGE
- PROCEED WITH DISASSEMBLY INSPECTION OF TOP PLATE AND LOCK AND SHIELD POSITION
- There are NO OPENINGS IN THE PACKAGE. Therefore there is no need to change the plan to NOT PERFORM A THERMAL TEST ON THE PACKAGE

Engineering: [signature] 18 MAR 99 Regulatory: [signature] 18 MAR 99 QA: D.W. Kurtz 18 MAR 99

Describe any post-test disassembly and inspection:
SEE ATTACHED SHEET

Describe any change in source position:

	BEFORE	AFTER	Δ
(A)	6.318	6.303	- 0.015
(B)	6.359	6.378	+ 0.019

Describe results of any pre- or post-test radiography:
No change in shield position - No damage to internal structure identified in radiographs

Completed by: [signature]	Date: 22 MAR 99

650L - TEST SPECIMEN TP80(A)

18 MAR 99

- REMOVED COVER - BOLTS & RIVNUTS OK

- SOURCE LOCATION
  - (A) 6.303
  - (B) 6.378

- SOURCES SECURED IN LOCKED POSITION
- NO DAMAGE TO LOCKS, LOCK SCREWS OR THROUGH BOLTS
- NO Deflection of top plate

NJM
18 MAR 99

Data Sheet 5: Puncture Test

Test Unit Model and Serial Number: 650L SN 182	Test Specimen: TP80 (B)
Test Date: 18 MAR 99 / Test Time: 1:20	Test Plan 80 Step No.: **8.10**

Describe drop orientation and drop height:
4 ft DROP ON PUNCTURE BAR - TARGET ~~ER~~ NJM 18MAR99 AXIAL CRACK

Describe impact (location, rotation, etc.):
Impact Point directly on axial crack ~~at~~ NJM 18MAR99

Describe on-site inspection (damage, broken parts, etc.):
- Small indentation on EITHER SIDE OF CRACK WHERE BAR IMPACTED
- No FURTHER OPENING OF CRACK WAS OBSERVED

On-site assessment:
- Radiograph device to further assess cracking and determine how to proceed.
- Radiographs were taken which showed cracking of inner sleeve only on the one side.
- Based on above it was determined that it is appropriate to proceed with inspection of top plate, lock mechanism and source position. IN ADDITION IT WAS DETERMINED THAT THE THERMAL TEST OF THE UNIT SHOULD BE PERFORMED WITH THE CRACK SIDE DOWN AND THE UNIT ROTATED FROM HORIZONTAL TO ALLOW THE SHIELD TO MOVE AS MUCH AS POSSIBLE

NJM 18 MAR 99

Engineering: NJ Murray 18MAR99 Regulatory: BMACK QA: D.W. Kurth 18MAR99

Describe any post-test disassembly and inspection:
SEE ATTACHED SHEET

Describe any change in source position:
- Deflection of top plate resulted in a very small change in source position as follows
  - (A) Δ is 0.027 in
  - (B) Δ is 0.064 in

Describe results of any pre- or post-test radiography:
SEE ABOVE

The crack ~~has~~ NJM appears to run the ~~EXTENT~~ 18MAR99 LENGTH OF THE INNER SHELL.

Completed by: NJ Murray	Date: 18 MAR 99

18 MAR 99

650L - TEST SPECIMEN TP80(B) - SN 182
DISASSEMBLY NOTES (POST PUNTURE BAR DROP)

- PART OF RIVNUT - ADJACENT TO SEAM - BROKEN OFF
- LID BOLTS UNDAMAGED, BUT RIVNUTS TURNED OUT
- LOCK B BROKEN OUT; SOURCE STILL LOCKED IN PLACE
- NO SIGNIFICANT DEFLECTION OF THROUGH-BOLT HEADS
- LOCK SCREWS INTACT; SOURCES LOCKED IN POSITION
- LOCKS ARE STILL FUNCTIONAL
- SOURCE POSITION:

		ORIG. SOURCE POS.	Δ
(A)	6.583	6.556	0.027
(B)	6.494	6.430	0.064

MJM
18 MAR 99

TP 9(B)
Post-Gn Drop

18 MAR 99

Dave Annis

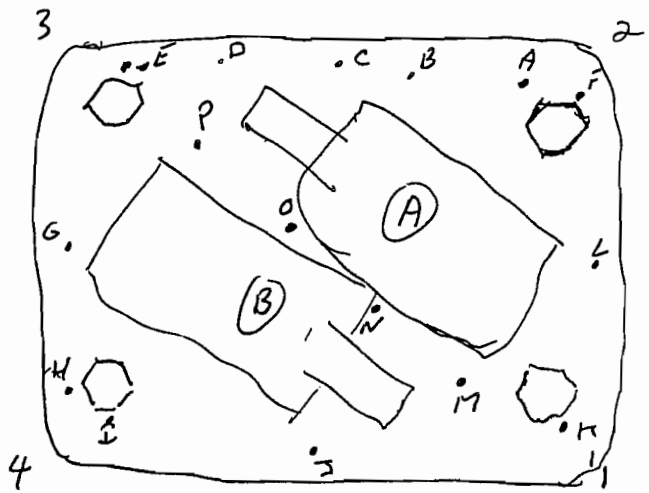

PT	
A	0.000
B	.032
C	.032
D	.019
E	-.005
F	-.005
G	.023
H	.013
I	.012
J	.019
K	.020
L	.003
M.	.034
N	.154
O	.162
P	.070

Data Sheet 5: Puncture Test

Test Unit Model and Serial Number: 650L SN 195		Test Specimen: TP80(C)
Test Date: 18 MAR 99	Test Time: 12:45p	Test Plan 80 Step No.: **8.10**

Describe drop orientation and drop height:
(1) - UPSIDE DOWN ON LID CENTER, AT A SLIGHT ANGLE.

(2ND) DROP ORIENTATION TARGET UNDERNEATH CORNER OF TOP PLATE PER Fig 11

(2) Impact on ~~Center~~ NEAR CORNER ON 2nd ATTEMPT

Describe impact (location, rotation, etc.):
(1) - EDGE OF PUNCTURE BAR HIT TOP PLATE OF LID WITHIN THE TUBE/COLUMN OF THE LID.

Describe on-site inspection (damage, broken parts, etc.):
(1) - DAMAGE TO LID INCREASED ONLY SLIGHTLY

(2ND) DROP ORIENTATION SMALL DEFORMATION OF TOP PLATE AT IMPACT POINT - NO DAMAGE TO PARTS - NO GAPS WERE CREATED BY TOP plate/SHELL INTERFACE

On-site assessment:
(1) - LOCK MECHANISMS NOT EXPOSED OR DIRECTLY IMPACTED IN DROP SEQUENCE
- LID BOLTS REMAINED INTACT
- PACKAGE INTEGRITY NO OPENINGS IN PACKAGE CREATED IN ANY OF THE DROPS.

(2) NOTE: IT WAS DECIDED ON-SITE TO PERFORM AN ADDITIONAL PUNCTURE BAR DROP USING THE TP80(C) TEST SPECIMEN. THE 2ND DROP ORIENTATION WILL TARGET UNDERNEATH CORNER OF TOP PLATE AS SHOWN IN FIGURE 11 OF THE TEST PLAN. [THIS DROP ORIENTATION WAS PLANNED FOR ITEM TP80(A)]

* SEE BELOW

Engineering: NJ Mary 18 March99 Regulatory: 18 MAR99 QA: D.W. Kurtz 18MAR99

Describe any post-test disassembly and inspection:
SEE ATTACHED SHEET

Describe any change in source position:

	BEFORE	AFTER	Δ
A	6.304	6.342	+0.038
B	6.256	6.259	+0.003

Describe results of any pre- or post-test radiography:
No damage to internals identified in radiography

Completed by:	Date: 22 MAR 99

* THERE ARE NO OPENING IN THE PACKAGE, THEREFORE THERMAL TESTING OF THE UNIT IS NOT REQUIRED (PER THE TEST PLAN) NJM 18 MAR99

PROCEED W/ DISASSEMBLY & INSPECTION

1635
18 March 99

650L Test
TP80(C) - Top Corner Drop
#195

Removed Cover → Bolts & RivNuts OK.
→ Top plate slightly warped due to puncture impact on corner #2 (i.e. slight upward bend in plate at corner #2)

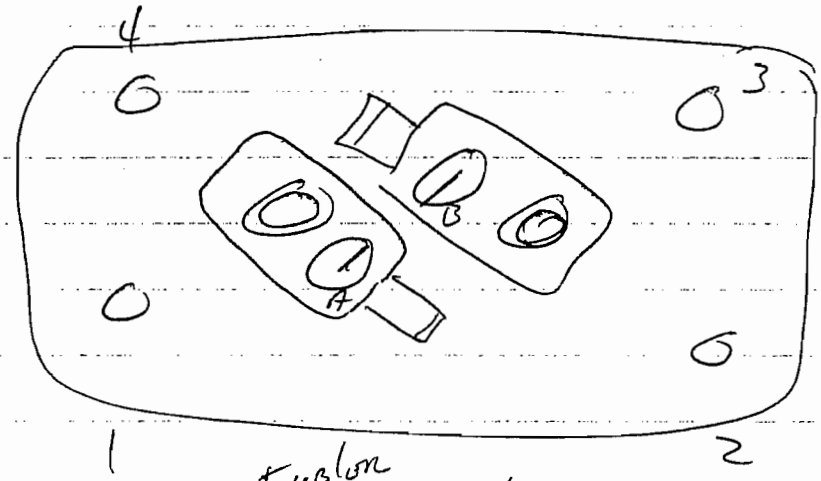

→ Lock Tumblon B slightly higher than normal (Lock B works)
→ Locks & lock slides work properly though difficult to move (due possible to ice)

Source: → 6.342 side A
6.259 side B

→ Sources secured in locked position
→ Through bolts & lock hardown screws show no sign of any deformation
→ No deflection or dishing of top plate

NPM
18 March 99

SENTINEL TP80(A) - AFTER 9M (30 FOOT) DROP TEST & PUNCTURE TEST

SHIELDING PROFILE AND INSPECTION FORM

lodel: 6506 Serial Number: 2243 Radionuclide: IR192 Max.Capacity: 240 Ci

Shield Data

Shield Heat#: _____ Mass of Shield: _____ Lbs. Lot #: _____

Initial Profile

Source Model: _____ Source SN: _____ Activity: _____ Ci

Survey Inst.: _____ SN: _____ Date Cal.: _____ Date Due: _____

Surface	Observed Intensity mR/hr	Surface Correction Factor		Adjusted Intensity mR/hr
Top			N/A	
Right			Capacity Correction Factor: _____	
Front				
Left				
Rear				
Bottom				

Inspector: _____ Date: _____ NCR #: _____

Final Profile

Source Model: 424-9 Source SN: C9274-112.3 ci. C9232-93.1ci Activity: 205.4 Ci Mass of Device: _____ Lbs.

Survey Inst.: AMPDR27T SN: SM392402 Date Cal.: 8 Oct 98 Date Due: 8 Oct 99

Surface	Observed Intensity mR/hr: At Surface	Surface Corr. Factor	Observed Intensity mR/hr: At One Meter		Adjusted Intensity mR/hr: At Surface	Adjusted Intensity mR/hr: At One Meter
Top	80	*N/A	2.3	Capacity Correction Factor: 1.16	93	2.7
Right	55		.7		64	.8
Front	80		.9		93	1.0
Left	50		.6		58	.7
Rear	70		.8		81	.9
Bottom	80		.5		93	.6

Inspector: MRBoyd Date: 19 March 99 NCR #: N/A

Q16-1/1

Comments: * Per WI-Q09 Worksheet

Amersham QSA

SENTINEL TP80(c) - AFTER 9M (30 FOOT) DROP TEST & PUNCTURE TEST

SHIELDING PROFILE AND INSPECTION FORM

odel: 650L Serial Number: 195 Radionuclide: IR192 Max.Capacity: 240 Ci

Shield Data

Shield Heat#: _____ Mass of Shield: _____ Lbs. Lot #: _____

Initial Profile

Source Model: _____ Source SN: _____ Activity: _____ Ci

Survey Inst.: _____ SN: _____ Date Cal.: _____ Date Due: _____

Surface	Observed Intensity mR/hr	Surface Correction Factor		Adjusted Intensity mR/hr
Top			N/A	
Right			Capacity Correction Factor:	
Front				
Left				
Rear				
Bottom				

Inspector: _____ Date: _____ NCR #: _____

Final Profile

Source Model: 424-9 Source SN: C9232-93.1ci C9274-112.3 ci. Activity: 205.4 Ci Mass of Device: _____ Lbs.

Survey Inst.: AN/PDR27T SN: SM392402 ~~SM392402~~ MAB 13 Apr 99 Date Cal.: 8 Oct 98 Date Due: 8 Oct 99

Surface	Observed Intensity mR/hr: At Surface	Surface Corr. Factor	Observed Intensity mR/hr: At One Meter		Adjusted Intensity mR/hr: At Surface	Adjusted Intensity mR/hr: At One Meter
Top	60	*N/A	1.9	Capacity Correction Factor: 1.16	70	2.2
Right	85		.8		99	.9
Front	45		.5		52	.6
Left	100		.9		116	1.0
Rear	50		.5		58	.6
Bottom	60		.4		70	.5

Inspector: MaBoyd Date: 19 March 99 NCR #: N/A

Q16-1/1

Comments: * Per WI-Q09 Worksheet

Amersham QSA

Equipment List 6: Thermal Test

Description	Enter the Model and Serial Number	Attach Inspection Report or Calibration Certificate
Bottom Surface Thermocouple 1	XCIB-K OMEGA	DW
Top Surface Thermocouple 2	OMEGA XCIB-K	DW
Side Surface Facing Oven Front Thermocouple 3	OMEGA XCIB-K	DW
Side Surface Facing Oven Rear Thermocouple 4	XCIB-K	DW
Source Tube Thermocouple 5/8 DW 19 MAR99	XCIB-K	DW
Oven	GE 60KW RESISTANT HEATED BOX FURNACE	DW N/A
Oven thermostat	OMEGA # XCIB-K-	DW
Record any additional tools used to facilitate the test and attach the appropriate inspection report or calibration certificate.		
SIDE SURFACE FACING LEFT TC 5	XCIB-K	DW
SIDE SURFACE FACING RIGHT TC 6	XCIB-K	DW
SIDE OF UNIT FACING OVEN FRONT TC 7	XCIB-K	DW
AMBIENT THERMOCOUPLE 9	XCIB-K	DW
THERMOCOUPLE THERMOMETER DW 19 MAR 99 ~~DWK~~	Cole-Parmer (12 CH) #ENG-21	DW

	Print Name:	Signature:	Date:
Completed by:	Dave Annis	Dave Annis	19 mar 99
Verified by:	Daniel W. Kurtz	D.W. Kurtz	19 Mar 99

Checklist 6: Thermal Test

Step	TP80(A)	TP80(B)	TP80(C)
1. Record Test Specimen Serial Number.		182	
2. Preheat the oven to 810°C.		DW	
3. Attach the thermocouples as described in Equipment List 6. Ensure the recording devices are active, and that the external thermocouples are shielded.	NJM 19 MAR 99	DW	NJM 19 MAR 99
4. Place the package in the oven in the worst case orientation and partially close the oven door such that a 1 inch by 36 inch opening is provided. Record the time.		DW 19 MAR 99 7:35 PM	
5. When all of the test specimen's surface temperatures exceed 810°C, begin the 30-minute time interval. Record the time.		DW 19 MAR 99 8:05 PM	
6. Monitor and record the test specimen and the oven temperatures throughout the 30-minute period to ensure that they are above 810°C		DW	
7. At the end of the 30-minute test period, shut off the oven and open the door. Record the time. (AND REMOVE THE TEST SPECIMEN NJM 19 MAR 99 N 19 MAR 99 DWK 19 MAR 99)		DW 19 MAR 99 8:37 PM	
8. Describe combustion when door is opened.		CHERRY RED NO FLAME	
9. Allow the specimen to cool, ~~then remove the specimen from the oven~~. Record the time. (NJM 19 MAR 99 N 19 MAR 99 DWK 19 MAR 99)		8:37 PM	
NOTE: If specimen continues to burn, let it self-extinguish and cool naturally.			
10. Measure and record the ambient temperature.		DW 25°C	
11. Photograph the test specimen and record any damage on data sheet 6.		DW	
12. Radiograph the unit to determine the shield location.		DW	
13. Measure and record the source location.		DW 24 MAR 99	
14. **Engineering, Regulatory Affairs and Quality Assurance** make a preliminary assessment relative to 10 CFR 71. Record assessment on Data Sheet 6.		DW	

Verified by:	Print Name:	Signature:	Date:
Engineering	*NICHOLAS MARRONE CAROLINE S. SCHLASEMAN	Nicholas J. Marrone Caroline S. Schlaseman	~~20 MAR 99~~ 24 MAR 99
Regulatory Affairs	* MARC J. NASCOU Cathleen Rayhan	[illegible] Cathleen Rayhan	~~20 MAR 99~~ 24 mar 99
Quality Assurance	*Daniel W. Kurtz Daniel W. Kurtz	D.W. Kurtz D.W. Kurtz	20 MAR 99 26 MAR 99

*COMPLETION OF ALL STEPS EXCEPT STEP 13 (Source location). Source location will be determined at the time of profiling NJM 20 MAR 99

Data Sheet 6: Thermal Test

Test Unit Model and Serial Number: 650L SN 182		Test Specimen: TP80(B)
Test Date: 19 MAR 99	Test Time: 7:35 pm	Test Plan 80 Step No.: **8.12**

Describe test orientation and setup:
PACKAGE ON JIG TO RAISE SIDE FACE OF UNIT TO AN ANGLE 53° ABOVE HORIZONTAL. SIDE WITH CRACK FACING DOWN (@ 53° ANGLE). SEE FIGURE – ATTACHED.

Describe package during testing:
POLYURETHANE FOAM BURNED OFF, CAUSING SOME RED FLAMES TO SHOOT OUT ABOVE OVEN DOOR. FLAMES DIMINISHED AND STOPPED COMPLETELY BEFORE 30 MINUTE INTERVAL COMPLETED.

Describe on-site inspection (damage, broken parts, etc.): WHEN OVEN DOOR FIRST OPENED, UNIT GLOWED BRIGHT RED (INCLUDING JIG). AFTER EXTERIOR HAD COOLED TO GREY COLOR, INSPECTION SHOWED: (1) NO CHANGE IN CONFIGURATION OF PACKAGE EXTERIOR, INCLUDING INNER SHELL -- e.g., CRACK WIDTH DID NOT CHANGE, (2) ALL FOAM IN TOP OF UNIT WAS GONE, SO DU SHIELD AND SOURCE TUBE CLOSEST TO CRACK WERE VISIBLE THROUGH CRACK OPENING, (3) DU SHIELD WAS GLOWING RED IN A FEW SPOTS AND OXIDE (BLACK POWDER) WAS BUILDING UP ON SHIELD SURFACE, (4) DU OXIDE WAS FALLING OUT OF UNIT PERIODICALLY AND FORMING A SMALL PILE BELOW FACE OF CRACK ON JIG'S BASE. NEXT MORNING (~10 HOURS LATER), INSPECTION SHOWED: (1) A CRACKED PIECE OF INNER SHELL HAD DROPPED OUT OF POSITION, ~~AND PARTIALLY COVERED CRACK OPENING~~, (2) PILE OF DU OXIDE BELOW CRACK WAS MUCH LARGER – AT LEAST 2" TALL, 3"Ø. ~~(3) DU OXIDE FILLING IN CRACK OPENING.~~ CAA 20MAR99 CAA 20 MAR 99

On-site assessment:
– CONTINUE WITH PROFILE & SOURCE POSITION MEASUREMENTS

Engineering: N.J. Marvin 20MAR99 Regulatory: [signature] 20MAR99 QA: D.W. Kurtz 20MAR99

Describe any post-test disassembly and inspection:
SEE ATTACHED SHEETS.

Describe any change in source position:
SEE ATTACHED SHEETS. ~~LATER?~~ CAA 24MAR99

Describe results of any pre- or post-test radiography: POST-TEST RADIOGRAPHS TAKEN FROM LONG SIDE & SHORT SIDE SHOWED SOURCE TUBES PULLED OUT FROM ~~ENGAGE (OR AT LEAST TOUCHING)~~ CAA 20 MAR99 TOP PLATE. ~~IN POSITION.~~ DU SHIELD WAS SHIFTED DOWN (TOWARD CRACK FACE) & SOURCE TUBE CLOSEST TO CRACK HAD BENT ~~SLIGHTLY~~ TO FOLLOW SHIELD. SHIELD DID NOT PASS BEYOND INTERFERANCE WITH THROUGH BOLTS. THE D.U. SHIELD "EAR" (MATERIAL AROUND SOURCE TUBE) CLOSEST TO CRACK WAS MISSING MATERIAL, DUE TO OXIDATION. THE SOURCE TUBE PULLOUT AND SHIELD SHIFT CAUSED THE TOP OF THE SOURCE TUBES TO BE MISALIGNED WITH THE LOCK ASSEMBLIES. THE GAP BETWEEN THE TOP OF THE SOURCE TUBE AND THE BOTTOM OF THE TOP PLATE IS LARGER FOR THE TUBE FURTHER FROM THE CRACK. CAA MAR 99 CAA 20MAR99

Completed by: [signature]	Date: 24 MAR 99

(54A1)

19MAR99
CSCHLESSMAN

650L TP80(B) SN 182
THERMAL TEST ORIENTATION

(SUPPORT FIXTURE SHOWN CROSS-HATCHED)

○ TC NUMBER

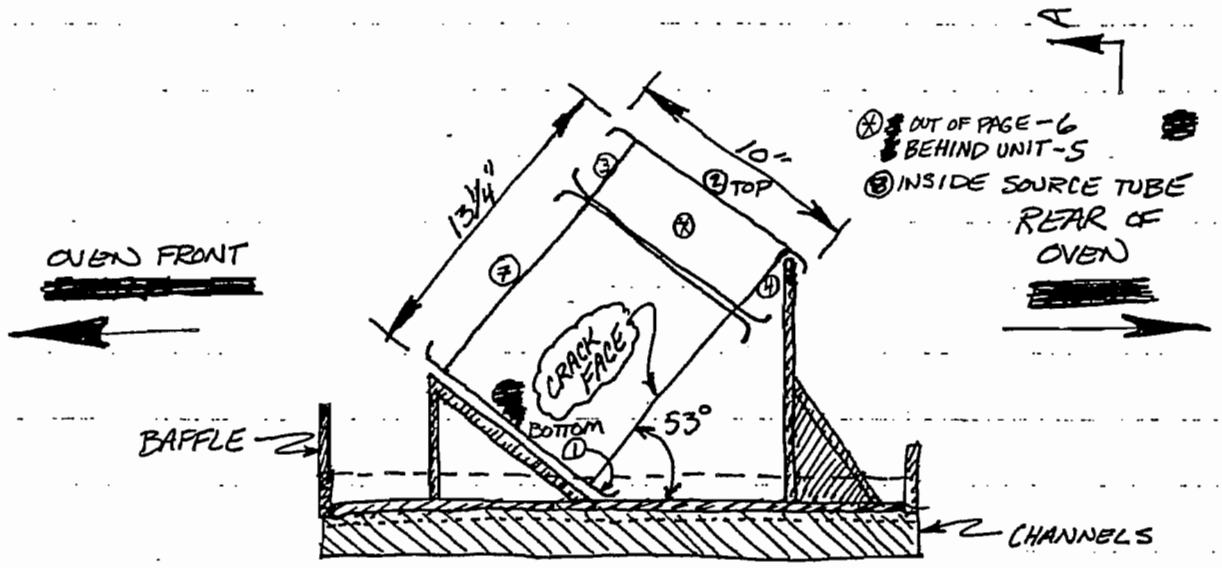

SIDE ELEVATION

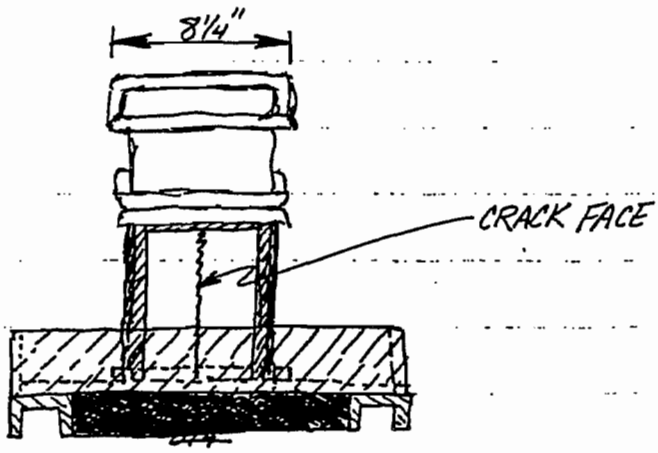

VIEW A-A
(FACING FRONT OF OVEN)

23MAR 99 @ MSC, OAK RIDGE, TN

INSPECTION & SET-UP FOR RADIATION PROFILE

1. SOURCE TUBE & SHELL TEMP'S AMBIENT (~16°C)
2. PHOTO 1 CRACKED PIECE OF INNER SHELL
3. PHOTO 2 CRACKED PIECE OF INNER SHELL REMOVED
4. PHOTO 3 " " " " " OUTSIDE UNIT
5. VACUUMED D.U. OXIDE VIA CRACK OPENING.
6. PHOTO 4 MELTED LEAD AT BASE OF UNIT
7. TUBES & ~~SHELL~~ SHIELD SEEM ~~FAIRLY~~ 24MAR99 FIXED, i.e., CAN'T MOVE.
8. CRACKED OFF REMAINING RIVETS FOR SS OVERWRAP.
9. DRILLED HOLE IN LOWER HALF OF SHELL OPPOSITE CRACK FACE — PHOTOS 5 & 6
10. VACUUMED D.U. OXIDE VIA HOLE; BASE AREA OF D.U. SHIELD LOOKED GOOD, COPPER SHIM AT BASE VISIBLE UNDER EDGE OF BASE, NO SIGN OF ANY REMAINING LEAD FROM THIS (THE UPPER) SIDE.
11. FOAMED w/ 20# VULTAFOAM FROM NEW HOLE; FOAM SURROUNDS SHIELD UP ABOUT 2/3 – i.e., TOPS OF DU "EARS" & SOURCE TUBES ARE STILL ACCESSIBLE.
12. DRILLED 3 ACCESS HOLES IN TOP SECTION OF UNIT SIDES, 90° APART, TO GET ACCESS TO DUMMY SOURCE WIRE IN "B" LOCK (FURTHER FROM CRACK).
13. REMOVED LID - PHOTO 7 - "A" LOCK CYLINDER MELTED ("B" LOCK CYLINDER HAD BROKEN OUT DURING 9M DROP.)

[CON'T]

23 MAR 99 – CON'T

(14) PHOTO 8: VIEW THROUGH CRACK: FOAM BELOW, RIVNUT ABOVE IN FOREGROUND, TOP OF "A" SOURCE TUBE (GREY) VISIBLE BELOW BOTTOM OF TOP PLATE, THERMOCOUPLE WIRE (SAME GREY COLOR AS TUBE) IS VISIBLE IN GAP BETWEEN TOP OF TUBE & BOTTOM OF TOP PLATE.

(15) DUMMY SOURCE WIRE MARKED W/ "WHITE OUT" @ TOP OF TUBE (VIA NEW HOLES)

(16) LOCK UNSCREWED, BUT SLIDE LEFT IN PLACE TO HOLD WIRE POSITION TEMPORARILY – PHOTO 9

(17) PHOTOS 10 & 11: SLIDE REMOVED ("B" SIDE), SOURCE WIRE STICKING UP.

(18) PHOTO 12: DUMMY SOURCE WIRE REMOVED; BRIGHT WHITE MARK ON 2ND BEND BELOW BALL IS TOP OF SOURCE TUBE POSITION; LIGHT GREY MARK BETWEEN BALL & WHITE MARK IS LIKELY ORIGINAL TOP OF TUBE MARK – GREY/DISCOLORATION IS DUE TO RUBBING OR SCUFFING.

(19) REMOVED "A" LOCK ASSEMBLY (WHICH HAD CONTAINED A TC WIRE & IS CLOSEST TO CRACK).

(20) PHOTOS 13 & 14: SOURCE TUBES VISIBLE BELOW TOP PLATE – SEE SKETCH FOR DIMENSIONS. (A) 0.436"

$\Delta = 6.992 - 6.556 =$

7.002 - .010 = 6.992" ← NEW LOCK Δ

"A" OLD LOCK .768, NEW LOCK .780, Δ = .010"

FOR 24 MAR 99: PHOTO 15

(1) → CHECK "A" SOURCE TUBE DEPTH W/ NYLON & NEW LOCK

(3) → ENLARGE HOLES IN TOP PLATE → PHOTO 16 → PHOTOS 17 & 18

(4) → PRACTICE SOURCE TRANSFER W/ DUMMY SOURCE

(5) → PERFORM PROFILE → SEE PROFILE SHEET

(2) → RE-CHECK "B" SOURCE TUBE DEPTH W/ NYLON – ~~USE Δ = 0.517" (WHICH IS SLIGHTLY HIGHER THAN NUMBER BACKED OUT FROM MARK MADE AT TOP OF SOURCE TUBE BY ~28 mils)~~ SEE NEXT SHEET FOR DETERMINATION OF SOURCE PULLOUT DISTANCE.

6.947 - 6.430 = 0.517" (B)

24 MAR 99 CDA

REF. DISTANCES:

	A	B	
HT. ABOVE TOP PLATE TO TOP OF SOURCE	0.954"	0.925"	
WITHDRAWAL HEIGHT	0.436"	24MAR99 CSA ~~0.517"~~ (BASED ON NYLON PROBE)	0.480" (SEE BELOW)
HT. ABOVE TOP PLATE FOR PROFILE	1.390"	24MAR99 CSA ~~1.442"~~	1.405"

CROSS-CHECK ON "B" SIDE (NO LOCKS ON TOP PLATE):

1. MATCH MARK ON DUMMY SOURCE USED IN THERMAL & DROP TESTS WITH NEW DUMMY SOURCE.
2. INSERT NEW DUMMY SOURCE WIRE IN TO THE POINT WHERE MARK MATCHES TOP OF TUBE.
3. MEASURE DIST. BETWEEN TOP OF PLATE & TOP OF SOURCE. → 1.385"
4. PUSH NEW DUMMY SOURCE ALL THE WAY TO BOTTOM OF TUBE AND MEASURE DIST. BETWEEN TOP OF PLATE & TOP OF SOURCE. → − 0.905"
5. SUBTRACT TO GET SOURCE PULLOUT.

0.480" ← USE THIS NUMBER WHICH IS A DIRECT MEASUREMENT USING A DUMMY SOURCE WIRE.

23MAR99 TP80(B) SN 182 AFTER THERMAL TEST

- LOCK ASSEMBLIES REMOVED
- SOURCE TUBE POSITION (TUBES BELOW TOP PLATE)

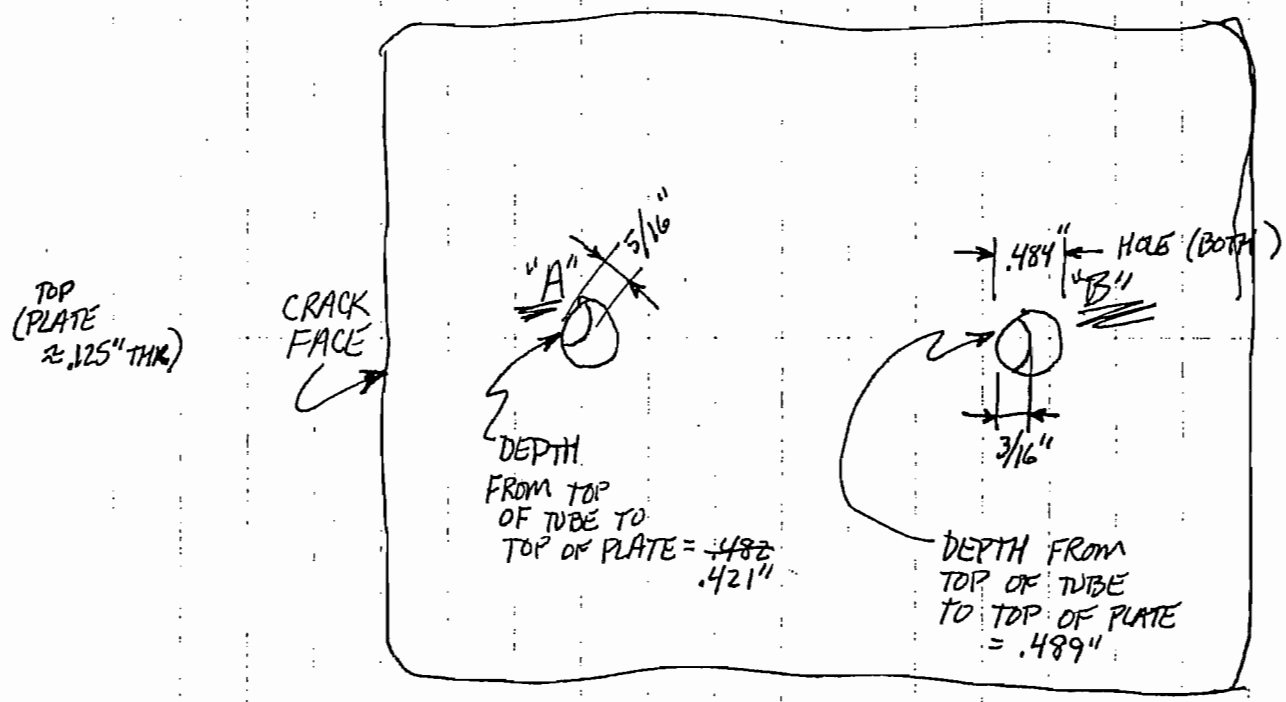

(54A 1, 54A2 THRU 54D)
David Mund 24 MAR99

54D

650L TP80(B) Test - (S/N 182) 19 Mar 99

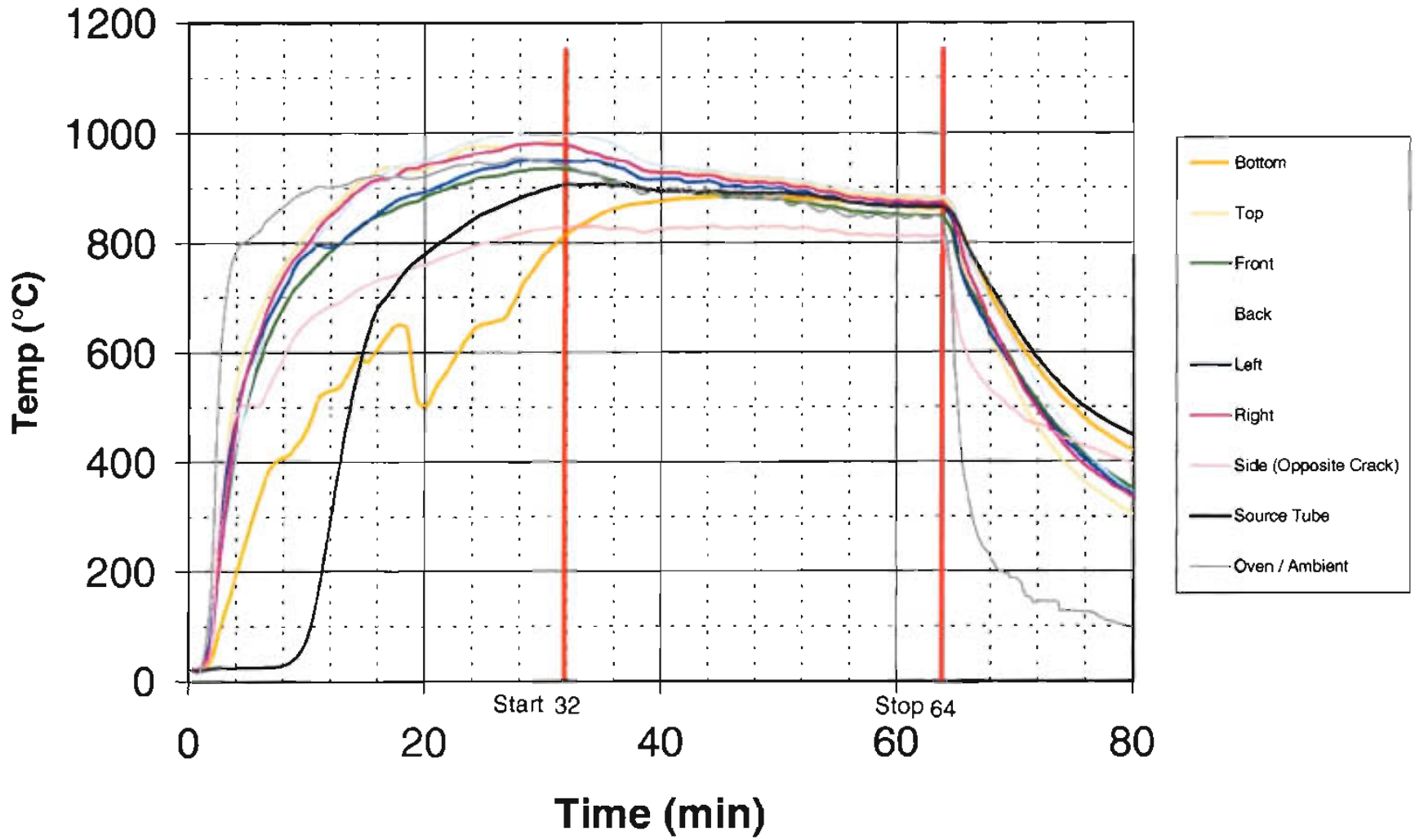

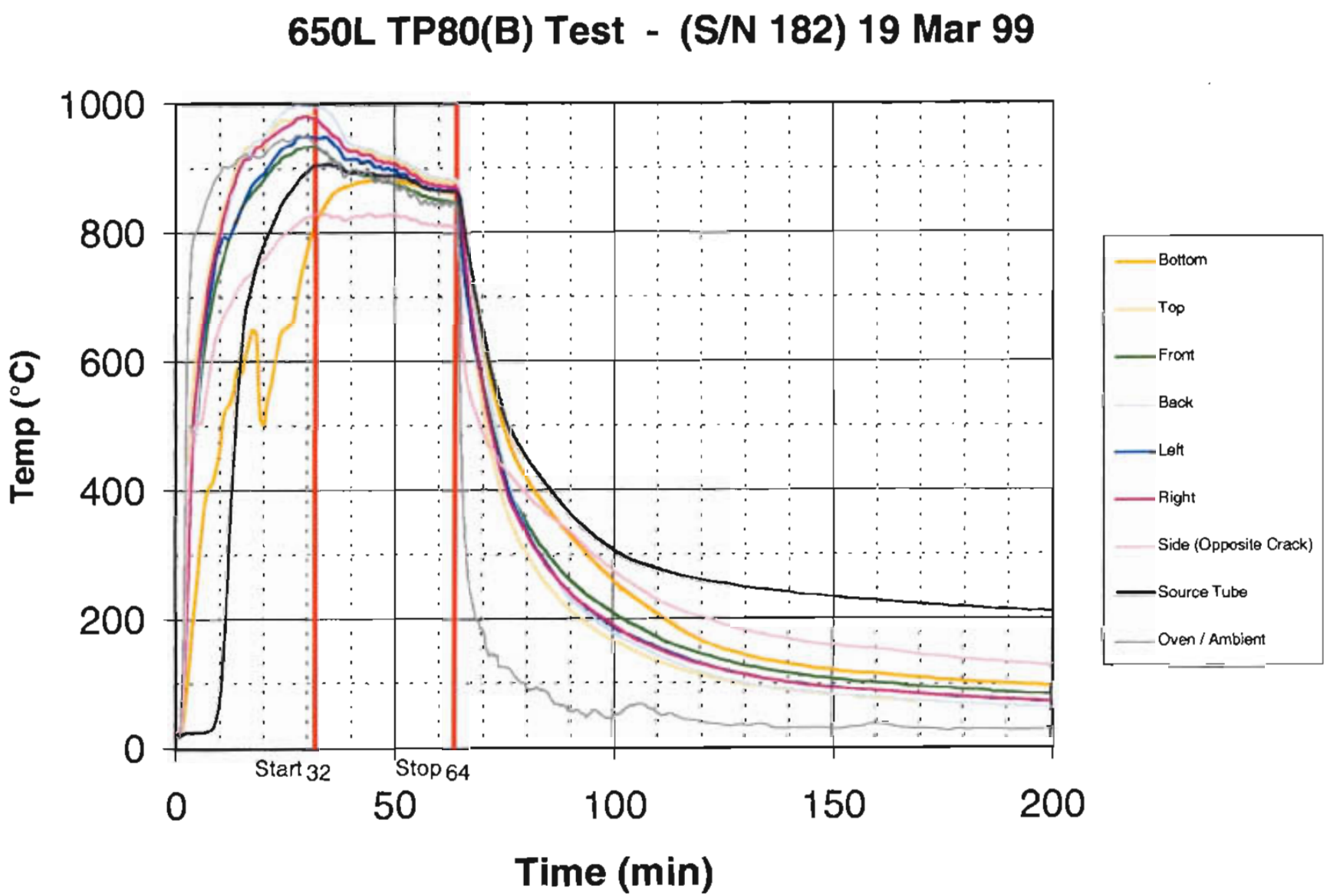
650L TP80(B) Test - (S/N 182) 19 Mar 99
Temp (°C)
1000
800
600
400
200
0
Start 32
Stop 64
0
50
100
150
200
Time (min)
Bottom
Top
Front
Back
Left
Right
Side (Opposite Crack)
Source Tube
Oven / Ambient

SENTINEL TP 80(B) After Thermal Test

SHIELDING PROFILE AND INSPECTION FORM

odel: 650L Serial Number: 182 Radionuclide: Ir-192 Max.Capacity: 240 Ci

Shield Data

Shield Heat#: _____ Mass of Shield: _____ Lbs. Lot #: _____

Initial Profile

Source Model: _____ Source SN: _____ Activity: _____ Ci

Survey Inst.: _____ SN: _____ Date Cal.: _____ Date Due: _____

Surface	Observed Intensity mR/hr	Surface Correction Factor		Adjusted Intensity mR/hr
Top			NA	
Right			Capacity Correction Factor: _____	
Front				
Left				
Rear				
Bottom				

nspector: _____ Date: _____ NCR #: _____

Final Profile total = 213.3

Source Model: 424-9 Source SN: C9313/C9312 Activity: 107.3/106 Ci Mass of Device: 83.6 Lbs.

Survey Inst.: Bicron Tech 50 SN: B-816-S Date Cal.: 8 Sep 98 Date Due: 8 Sep 99

Surface	Observed Intensity mR/hr: At Surface	Surface Corr. Factor	At One Meter		Adjusted Intensity mR/hr: At Surface	At One Meter
Top			25			28
Right	NA		5			5.6
Front			5	Capacity Correction Factor: 1.125		5.6
Left			7			7.9
Rear			7			7.9
Bottom			1			1.1

nspector: [illegible] Date: 3-24-99 NCR #: NA

QI6-1/1

omments: _____

source SN C9313 - 109.3 Ci on 3-22-99 - 107.3 on 3-24-99 cmr
C9312 108 Ci on 3-22-99 - 106 on 3-24-99

Amersham QSA

Total Activity 3-24-99 = 213.3

APPENDIX D

TEST PHOTOGRAPHS

Test Plan 80 Photographs

Compression Test

Typical Penetration Test Setup

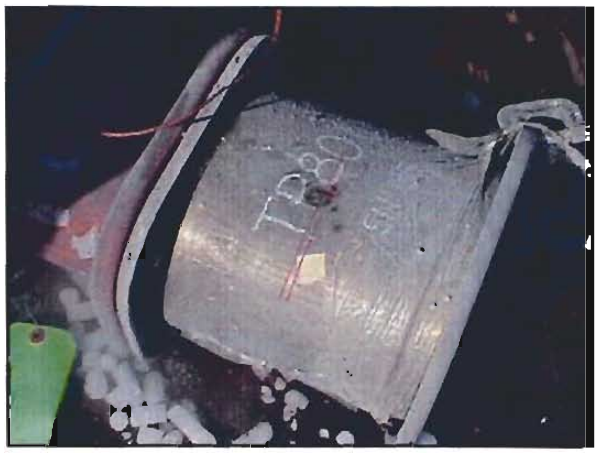

Typical Penetration Impact

Test Plan 80 Photographs

TP80(A) 4 Foot Drop Setup

TP80(A) 4 Foot Drop Results

TP80(A) 30 Foot Drop Setup

TP80(A) 30 Foot Drop Results

Test Plan 80 Photographs

TP80(A) Puncture Test Setup

TP80(A) Puncture Test Results

Test Plan 80 Photographs

TP80(B) 4 Foot Drop Setup

TP80(B) 4 Foot Drop Test Results

Test Plan 80 Photographs

TP80(B) 30 Foot Drop Setup

TP80(B) 30 Foot Drop Results

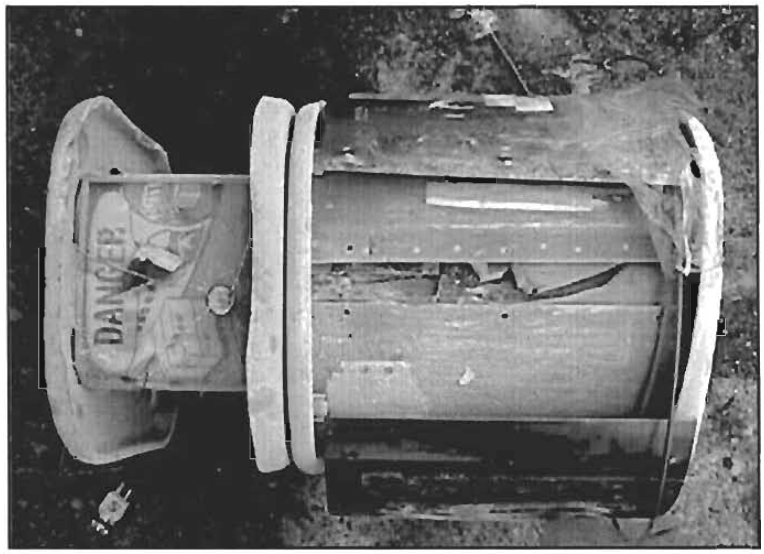

TP80(B) 30 Foot Drop Results

Test Plan 80 Photographs

TP80(B) Puncture Test Setup

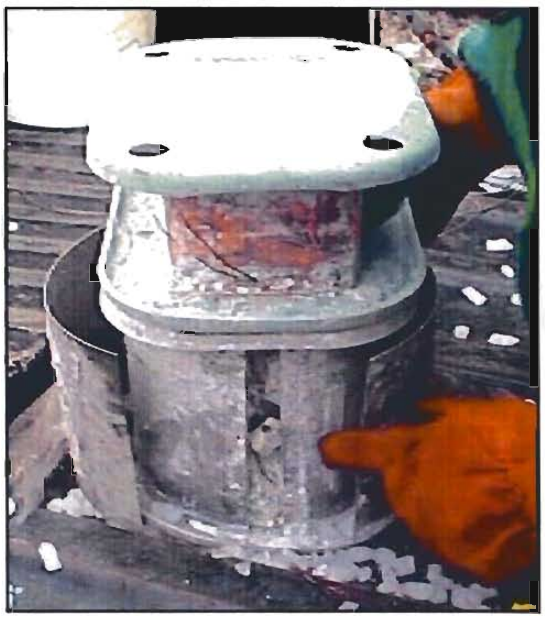

TP80(B) Puncture Test Results

Test Plan 80 Photographs

TP80(C) 4 Foot Drop Test Results

TP80(C) 30 Foot Drop Setup

TP80(C) 30 Foot Drop Results

TP80(C) 30 Foot Drop Results

Test Plan 80 Photographs

TP80(C) Puncture Drop 1 Setup

TP80(C) Puncture Drop 1 Results

TP80(C) Puncture Drop 2 Setup

TP80(C) Puncture Drop 2 Results Showing Closeup of Rivnut

Test Plan 80 Photographs

TP80(B) Thermal Test Setup

TP80(B) Thermal Test Setup

TP80(B) Thermal Test After Removal From Oven

TP80(B) Thermal Test After Removal From Oven

Test Plan 80 Photographs

TP80(B) Thermal Test After Removal From Oven

TP80(B) Detail of Cracked Shell

TP80(B) Detail of Uranium Oxide Residue

TP80(B) Detail of Uranium Oxide Residue

Test Plan 80 Photographs

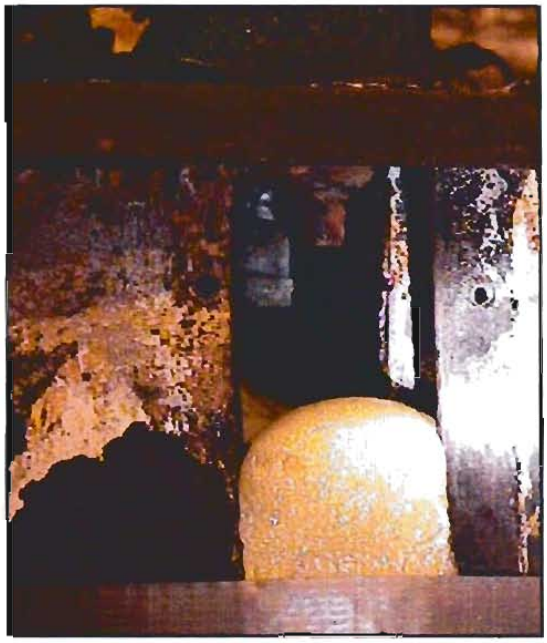

TP80(B) Thermal Test After Removal From Oven--Detail of Crack After Foaming to Stabilize Shield

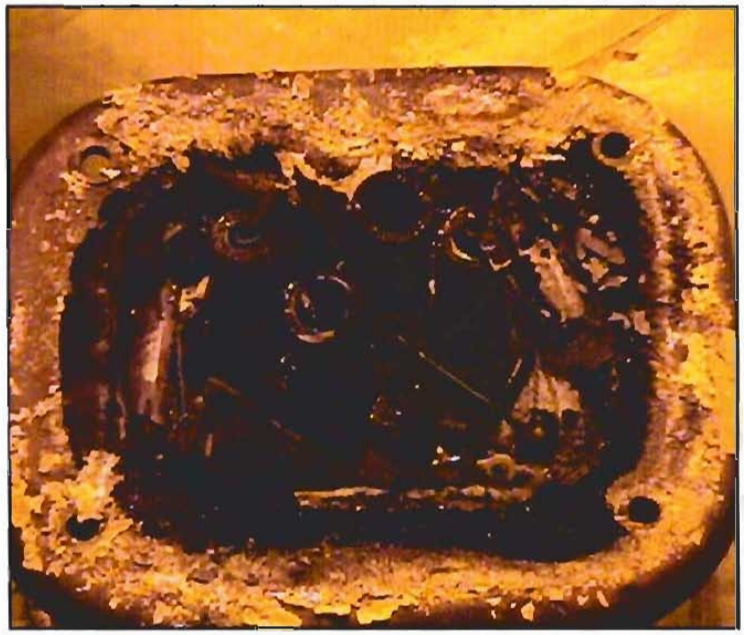

TP80(B) Thermal Test After Removal From Oven—Lid Removed

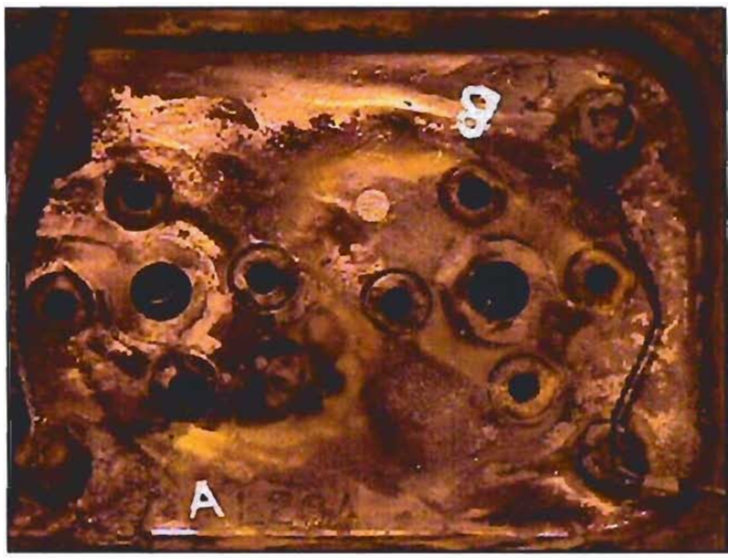

TP80(B) Thermal Test After Removal From Oven--Detail of Source Tube Displacement After Removal of Lock Assemblies

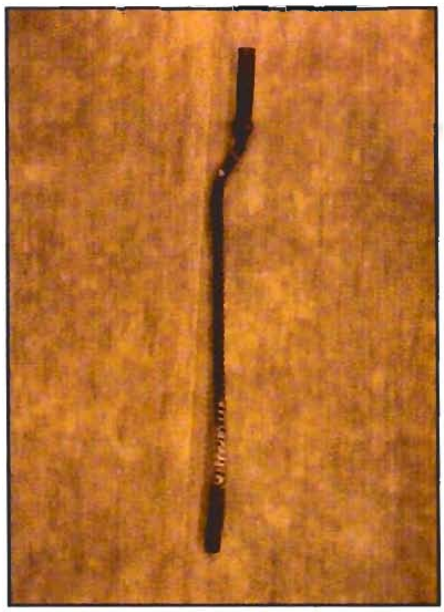

TP80(B) Thermal Test After Removal From Oven--Dummy Source Wire--White Mark Shows Top of Source Tube Position

2.12.10 Test Report #1 for Test Plan 188 Rev 1 (minus Sections 7.3 – 7.5)

QSA GLOBAL	Document Number F-E-1808-2 Test Report Cover Sheet	Revision 1

TEST REPORT #1
FOR TEST PLAN 188

Model 880 Pipeliner
ISO 3999:2004(E)
Handle, Attachment Part or Lifting Mount Test

ISO 3999:2004(E)
Radiographic Protection – Apparatus for Industrial Gamma Radiography
Specifications for Performance, Design, and Tests
Sect 5.8.4.3 Tests for Exposure Containers, Handle, Attachment Part or Lifting Mount

Originator	Paul Rice	Date: 16 JUL 2010

APPROVALS		
Engineering		Date: 23 Jun 10
Regulatory		Date: 28 Jun 10
Quality Assurance		Date: 9 Jul 10

Contents Page

SECTION 1 ..... INTRODUCTION 3

SECTION 2 ..... CONSTRUCTION AND ACCEPTANCE OF TEST SPECIMENS 3

FIGURE 2.1 MODEL 880 PIPELINER PROJECTOR IN STANDARD CONFIGURATION. 4

FIGURE 2.2 MODEL 880 PIPELINER PROJECTOR IN PIPELINER CONFIGURATION. 5

SECTION 3 ..... TEST OBJECTIVES 6

SECTION 4 ..... TEST SETUP 7

SECTION 4 ..... TEST DATA 8

SECTION 5 ..... FINAL INSPECTION AND ASSESSMENT 8

SECTION 6 ..... CONCLUSION 9

SECTION 7 ..... ATTACHMENTS 9

SECTION 7.1 WORKSHEETS 10

SECTION 7.2 TEST PLAN 188 11

SECTION 7.3 QSA PRODUCTION RECORDS INCLUDING COMPLETE PROFILE RECORDS 12

SECTION 7.4 IRSS PRODUCTION RECORDS 13

SECTION 7.5 EQUIPMENT CERTIFICATION RECORDS 14

Dillon Model Ed- Junior Serial No DEDJ1300785, 2500 lbs digital crane scale 14

Section 1 Introduction

This document describes the mechanical tests and results for the Model 880 Pipeliner Projector to meet the requirements of the following standards

ISO 3999:2004(E), Radiographic protection – Apparatus for Industrial Gamma Radiography
Part 1: Specifications for Performance, Design, And Tests
Section 5.8.4.3 - Handle, attachment part or lifting mount

As part of this test plan the following ISO 3999:2004(E) tests were performed

Section 6.4.3 - Handle, attachment part or lifting mount test.

Section 2 Construction and Acceptance of Test Specimens

This Model 880 assembly used for this device was originally manufactured by QSA Global as a production Model 88015.

The assembly was retrofitted to a PipeLiner configuration by QSA Global production personnel under TMI279.

The PipeLiner retrofit components for this device were supplied and assembled by IRSS.

The device used for this test was previously used for;
Test Plan 187 Model 880 Pipeliner, ISO 3999:2004(E) / ANSI N432 (1980), Endurance Test

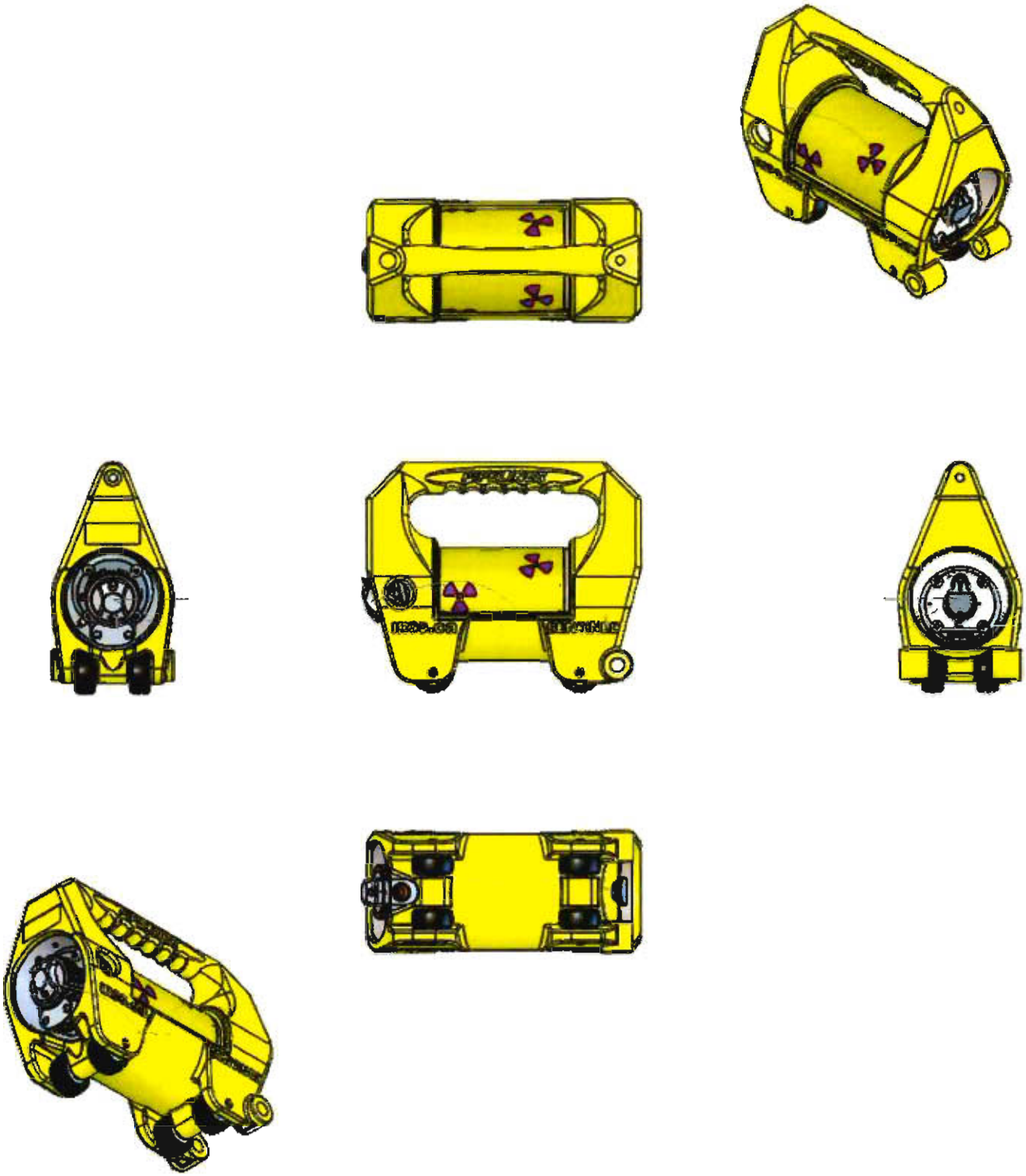

FIGURE 2.1 MODEL 880 PIPELINER PROJECTOR IN STANDARD CONFIGURATION.

Maximum Weight as Shown 55 lbs

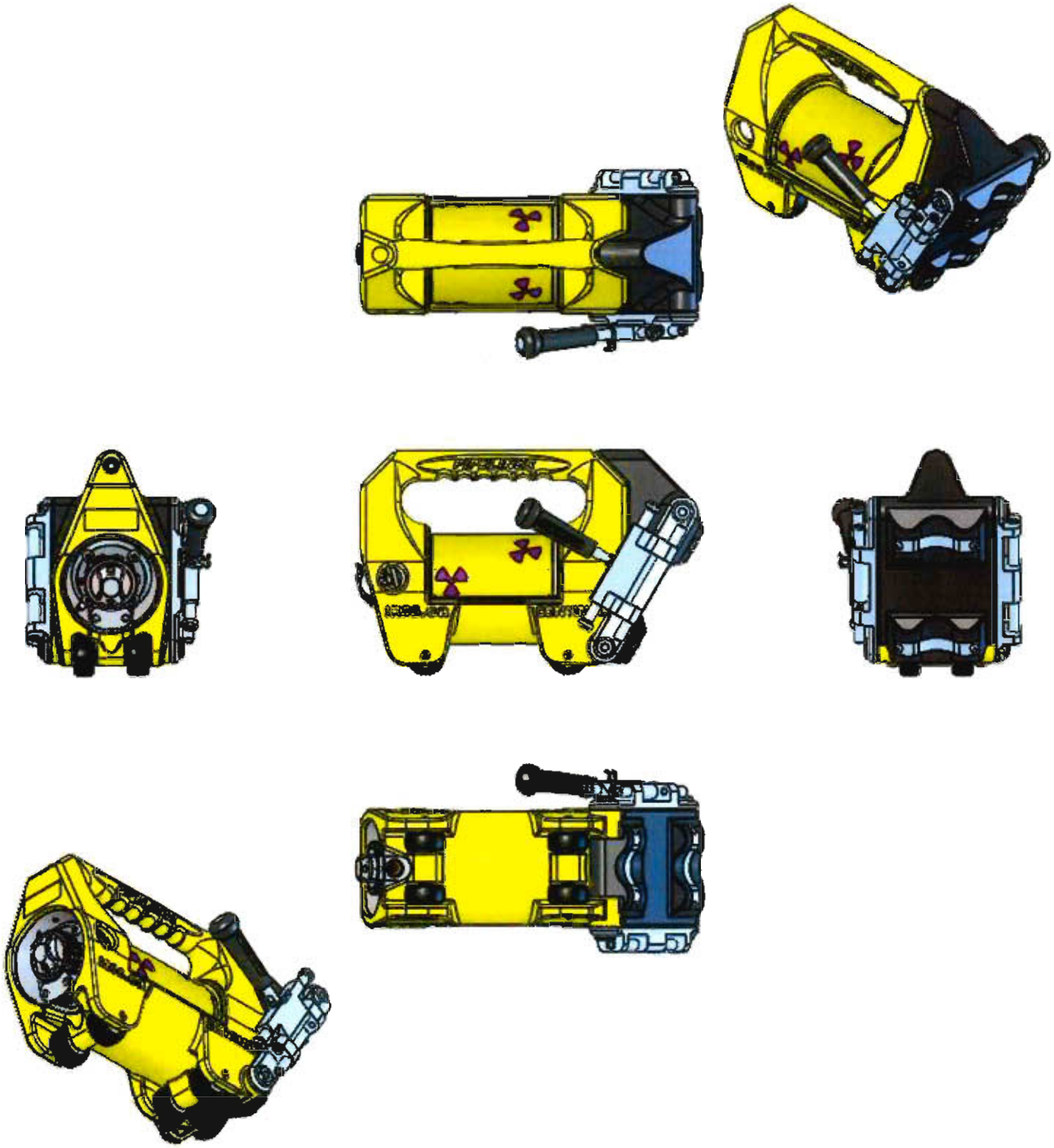

FIGURE 2.2 MODEL 880 PIPELINER PROJECTOR IN PIPELINER CONFIGURATION.

Maximum Weight as Shown 70 lbs

Section 3 Test Objectives

Objectives

The purpose of this test was to demonstrate that the Model 880 Pipeliner projector meets the requirements of;

ISO 3999:2004(E)
Radiographic Protection – Apparatus for Industrial Gamma Radiography
Part 1: Specifications for Performance, Design, and Tests
Sect 5.8.4.3 Tests for Exposure Containers, Handle, Attachment Part or Lifting Mount

Section 4 Test Setup

The test setup was modified from the original test plan.

1. The equipment used is shown in pictures 1 & 2.
2. The setup is shown in picture 3
3. The setup was the same for both configurations, Standard and Pipeliner.
4. The setup consisted of:

4.1. A Walker Model CER.9 electro-magnet rated for 2400 lbs secured to the Drop Test Pad, T10740, S/N 001.

4.2. The magnet was protected from damage by a cork enclosure topped with ½ plywood.

4.3. The Pipeliner test device was secured to the magnet with a 2" wide ratchet strap.

4.4. The load was applied by a fork-truck equipped with a lifting hook attachment.

4.5. The load was measured by a Dillon Model Ed- Junior series digital crane scale rated for 2500 lbs

4.6. The scale was attached to the device handle with a 2" wide lift strap.

4.7. The device to be tested was cooled using dry ice to a temperature ≤ -40° F prior to each test.

1 Test equipment and camera positions

2 Test equipment

3 Test setup

Section 4 Test Data

4 Standard configuration loaded

5 PipeLiner configuration loaded

The 'Standard' configuration was loaded to 1,568 lbs (25X 62.7 lbs)

The 'PipeLiner' configuration was loaded to 1,768 lbs (25X 70.7 lbs)

Section 5 Final Inspection and Assessment

The PipeLiner handle and jacket assembly was inspected after each test and no damage or permanent deformation was found.
The Pipeliner configuration is not intended for transport, but was tested due to the increased weight and possible affects of the Shoe Mounting Bolt that runs inside the handle in this configuration only. The bolt was removed after the test for inspection and was not bent or damaged.

Section 6 Conclusion

Both configurations evaluated in this report, Standard and PipeLiner, passed and exceeded the requirements of Test Plan 188 and ISO 3999:2004(E) Radiographic Protection – Apparatus for Industrial Gamma Radiography, Part 1: Specifications for Performance, Design, and Tests, Sect 5.8.4.3 Tests for Exposure Containers, Handle, Attachment Part or Lifting Mount.

In both configurations the handle showed no damage or deformation after a load in excess of the 25X requirement was applied. The same device was used for both test configurations and therefore was subjected to the load twice with no damage.

Additionally both configurations of the device were tested and passed at -40° F.

Section 7 Attachments

Section 7.1 Worksheets

Test Plan 188
Handle, Attachment Part or Lifting Mount

Material and Equipment:

Test device (Model 880) serial number: TP186-C Configuration: ☒ Standard ☐ Pipeliner

Weight of test device (Model 880): 53.24 lbs Total weight of test equipment: SCALE ZERODD

Scale: DILLON MODEL ED. JR SERIAL # DED51300785

Unit complies with IRSS "Work instruction for performing Pipeliner Retro Fit" Rev 1 Quality Control

Test Procedure:

1. Prepare test specimen as described in "Construction and Condition of Test Specimen".
2. Cool the device to -40° F
3. Secure device to plate and add weight to 25 times weight of test specimen as shown in Fig. 6.1. or 6.2
4. Record the device temperature. -45°F
5. Lift test specimen and weight from middle of handle with crane.
6. Record total weight. 1568 lbs MAX READING. REQUIRED LOAD WAS 1375 lbs
7. Inspect test handle for cracks or other visible damage.

Damage and/or operational malfunctions:

NO DAMAGE TO HANDLE

Test Assessment:

TEST SETUP WAS CHANGE FROM PLAN. THE HANDLE WAS LIFTED BY A FORK TRUCK WHILE SECURED TO THE DROP TEST PLATE. SEE ATTACHED SETUP

THE DEVICE PASSED WITH NO DAMAGE

Recorded by: (PAUL RICE) Date: 11 MAR 2010

Witnessed by: Karl Anderson Date: 16 April 2010

WORKSHEET 8.1 HANDLE, ATTACHMENT PART OR LIFTING MOUNT

Test Plan 188
Handle, Attachment Part or Lifting Mount

Material and Equipment:

Test device (Model 880) serial number: TP186-C Configuration: ☐ Standard ☒ Pipeliner

Weight of test device (Model 880): 66.68 lbs Total weight of test equipment: SCALE WAS ZERO'D

Scale: DILLON MODEL EQ-JR SERIAL # DEDJ1300785

Unit complies with JRSS "Work instruction for performing Pipeliner Retro Fit" Rev 1 _____ Quality Control

Test Procedure:

1. Prepare test specimen as described in "Construction and Condition of Test Specimen".
2. Cool the device to -40° F
3. Secure device to plate and add weight to 25 times weight of test specimen as shown in Fig. 6.1. or 6.2
4. Record the device temperature. -41 °F
5. Lift test specimen and weight from middle of handle with crane.
6. Record total weight. 1768 lbs MAX READING. REQUIRED LOAD WAS 1746 lbs
7. Inspect test handle for cracks or other visible damage.

Damage and/or operational malfunctions:

NO DAMAGE TO HANDLE

Test Assessment:

TEST SETUP WAS CHANGED FROM PLAN. THE HANDLE WAS LIFTED BY A FORKTRUCK WHILE THE DEVICE WAS SECURED TO THE DROP TEST PAD. SEE ATTACHED SETUP

THE DEVICE PASSED WITH NO DAMAGE.

Recorded by: (PAUL RIEGS) Date: 19 MAR 2010

Witnessed by: Karl Anderson Date: 16 April 2010

WORKSHEET 8.1 HANDLE, ATTACHMENT PART OR LIFTING MOUNT

QSA GLOBAL	Document Number **TP188**	Revision **0**

TEST PLAN 188

Model 880 Pipeliner

ISO 3999-1:2004(E)
Handle, Attachment Part or Lifting Mount Test

ISO 3999-1:2004(E)
Radiographic Protection – Apparatus for Industrial Gamma Radiography
Part 1: Specifications for Performance, Design, and Tests
Sect 5.8.4.3 Tests for Exposure Containers, Handle, Attachment Part or Lifting Mount

Originator	Paul Rice	Date: 15 DEC 09

APPROVALS		
Engineering		Date: 15 Dec 09
Regulatory		Date: 16 Dec 09
Quality Assurance		Date: 16 DEC 09

CONTENTS PAGE

SECTION 1 INTRODUCTION 3

SECTION 2 PIPELINER RADIOGRAPHY PROJECTOR DESCRIPTION 4

FIGURE 2.1 MODEL 880 PIPELINER PROJECTOR IN STANDARD CONFIGURATION. 5

FIGURE 2.2 MODEL 880 PIPELINER PROJECTOR IN PIPELINER CONFIGURATION..... 6

SECTION 3 DISCUSSION ON SYSTEM FAILURE MODES OF INTEREST 7

SECTION 4 CONSTRUCTION AND CONDITION OF TEST SPECIMENS 8

SECTION 5 TEST SPECIMEN PREPARATION AND INSPECTION 9

SECTION 6 TEST PROCEDURES 10

FIGURE 6.1 MODEL 880 PIPELINER - STANDARD CONFIGURATION TEST SETUP 11

FIGURE 6.2 MODEL 880 PIPELINER - PIPELINER CONFIGURATION TEST SETUP 11

SECTION 7 FINAL TEST ASSESSMENT 13

SECTION 8 TEST WORKSHEETS 14

WORKSHEET 8.1 HANDLE, ATTACHMENT PART OR LIFTING MOUNT 14

SECTION 9 ATTACHMENTS 15

ATTACHMENT 9.1 DRAWING 88095 REV A, PIPELINER TYPE B TRANSPORT DEVICE 15

ATTACHMENT 9.2 DRAWING 88095-1 REV A, PIPELINER ASSEMBLY 16

Section 1 Introduction

This test plan is intended to evaluate only the Pipeliner Jacket Assembly produced by IRSS to the performance requirements of:

ISO 3999-1:2004(E), Radiographic protection – Apparatus for Industrial Gamma Radiography
Part 1: Specifications for Performance, Design, And Tests
Section 5.8.4.3 - Handle, attachment part or lifting mount

The test sequence to be used for the testing is listed in:

Section 6.4.3 - Handle, attachment part or lifting mount test.

This plan outlines the test procedure, describes the test specimen construction, identifies the test equipment, and provides worksheets for test data recording.

The QSA Global Model 880 Radiography Projector assembly and jacket has been tested and approved under previous AEA Technologies and QSA Global test plans

Section 2 Pipeliner Radiography Projector Description

The Model 880 Pipeliner projector, shown in Figure 2.1 & 2.2, is a portable (Class P), externally projecting source (Category II) device. The device consists of two major assemblies; the QSA Model 880 body assembly and the IRSS Pipeliner assembly.

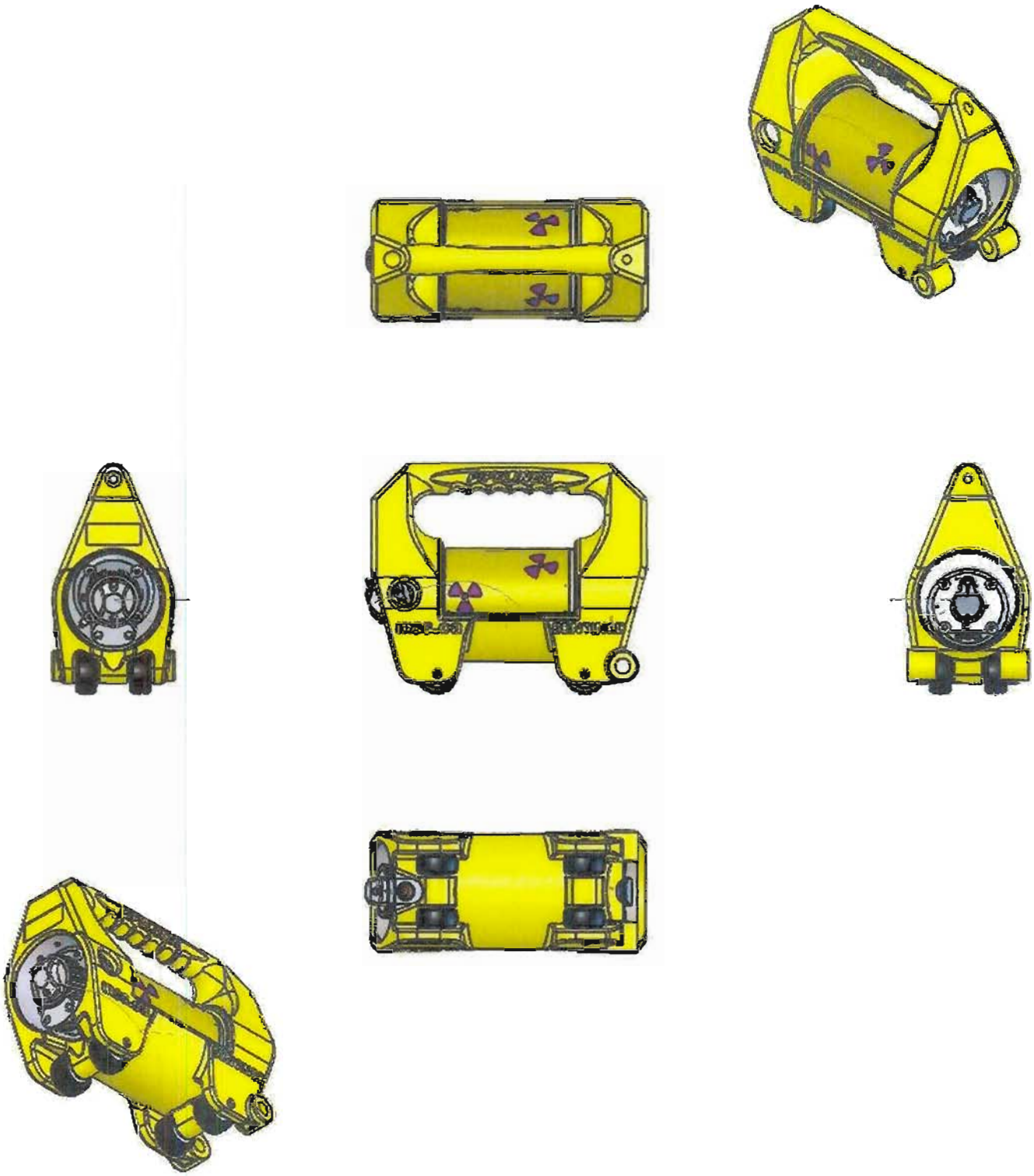

FIGURE 2.1 MODEL 880 PIPELINER PROJECTOR IN STANDARD CONFIGURATION.

Maximum Weight as Shown 55 lbs

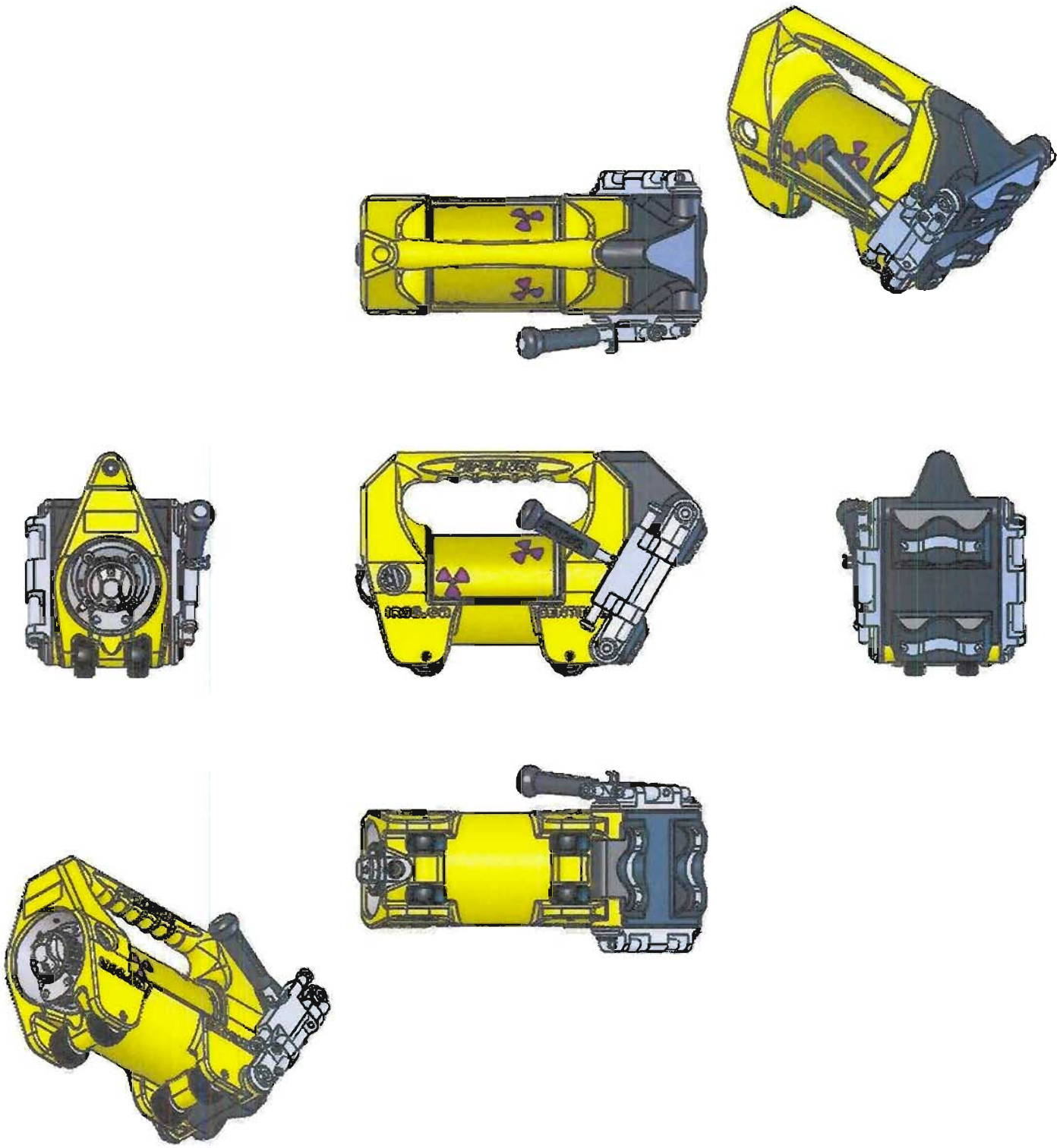

FIGURE 2.2 MODEL 880 PIPELINER PROJECTOR IN PIPELINER CONFIGURATION.

Maximum Weight as Shown 70 lbs

Section 3 Discussion on System Failure Modes of Interest

The Handle, Attachment Part or Lifting Mount Test is used to demonstrate that the handle of the exposure device is able to withstand forces that may be encountered during use.

A failure would be indicated by:

- The handle breaking.
- The handle becoming unattached from the device.

A failure could result in:

- The user not being able to use the handle to carry the device.
- The device being dropped.

The Pipeliner has two configurations:

- Standard, configured without the shoe and collimator assemblies for use with a standard guide tube and collimator.
- Pipeliner, configured with the shoe and collimator assemblies.

In the 'Standard' configuration the total system weight is approximately 55 lbs. In this configuration the handle has a hole, approximately ½" in diameter, extending along its centerline for the full length of the handle.

In the 'Pipeliner' configuration the total system weight is approximately 70 lbs. In this configuration the shoe mounting bolt, a 3/8" diameter stainless steel socket head cap screw, is inserted thru the hole in the handle giving additional support to the plastic jacket.

It is unclear which of these conditions puts the worse load on the handle, the lower load and less support of the 'Standard' configuration or the high load with added support of the 'Pipeliner' configuration.

Since both conditions will commonly be used, both configurations will be tested.

The Pipeliner jacket material has a rated operating temperature range of approximately –30°F to 200°F. Because this does not meet the minimum -40°F temperature requirement of the intended area of use this series of tests will be performed with the test units cooled to -40°F.

Section 4 Construction and Condition of Test Specimens

All system components used in this test plan are manufactured in accordance with the QSA Global, Inc. (QSA) or Industrial Radiography Supplies and Services Inc. (IRSS) (as an approved supplier to QSA Global) Quality Assurance Programs

A Pipeliner Jacket, Part Number PL1013 Revision B, manufactured by Industrial Radiography Supplies and Services Inc. (IRSS) is the part to be evaluated.

The Pipeliner assembly will be manufactured and supplied by IRSS in accordance with the Industrial Radiography Supplies and Services Inc. (IRSS) Quality Assurance Program, as an approved supplier to QSA. IRSS Certificates of Compliance for the supplied parts and assemblies will be included as part of the final test report.

Assembly of the Pipeliner test specimen used for this test will be done by QSA staff qualified to perform maintenance on 880 projectors in accordance with Industrial Radiography Supplies and Services Inc. (IRSS) instructions for conversion of a standard Model 880 projector titled "Work instruction for performing Pipeliner Retro Fit" Rev 1.
Inspection of the finished assembly will be performed by the QSA QC department in accordance with the requirements of Industrial Radiography Supplies and Services Inc. (IRSS) instructions for conversion of a standard Model 880 projector titled "Work instruction for performing Pipeliner Retro Fit" Rev 1.
This represents the process QSA and IRSS intend to use for the manufacture of production units.

Section 5 Test Specimen Preparation and Inspection

1. Manufacture one Model 880 projector per QSA Global drawing number B88015, revision C. The projector is profiled per WI-Q1816 as part of this procedure.

2. Mount the projector in the Pipeliner assembly, IRSS part number PL1000 revision 1, per IRSS instructions for conversion of a standard Model 880 projector titled "Work instruction for performing Pipeliner Retro Fit" Rev 1. This procedure will be done under TMI 279, one of the units built for testing under this TMI will be used for this test.

3. Measure and record the weight of the specimen and must be less than 55 pounds

4. Inspect the test specimen to ensure that:

    a. All fabrication and inspection records are documented in accordance with the QSA Global Quality Assurance Program.

    b. The test specimen complies with the requirements of the drawings and the IRSS assembly instructions.

5. This unit, in the 'Standard' configuration will be used for the first test.

6. After completion of the first test this unit will be reconfigured as specified in the IRSS Pipeliner Operations and Maintenance Manual to the 'Pipeliner' configuration. This involves the installation of the Pipeliner Shoe and Collimator assemblies. A copy of this manual will be included as part of the final test report.

7. Measure and record the weight of the specimen, and must be less than 70 pounds

8. Inspect the test specimen to ensure that:

    a. All fabrication and inspection records are documented in accordance with the QSA Global Quality Assurance Program.

    b. The test specimen complies with the requirements of the drawings and the IRSS assembly instructions.

Section 6 Test Procedures

Requirements

The Handle, Attachment Part or Lifting Mount Test demonstrates that the exposure container handle is able to withstand a static force equal to 25 times the maximum weight of the device. The force is to be applied to the most vulnerable part of the handle. The most vulnerable part of the handle is considered to be the middle of the handle where the most bending stresses will occur.

For the 'Standard' configuration the maximum device weight is 55 lbs requiring a test weight of 1375 lbs.

For the 'Pipeliner' configuration the maximum device weight is 70 lbs requiring a test weight of 1746 lbs.

The test weight is the total of the device weight, the weight of any fixturing and applied load.

Equipment

1. The test IRSS Pipeliner assembly installed on a Model 880 body.
2. A test plate that, when strapped to the device, achieves a total weight of at least 1746 lbs.
3. A scale to verify the weight of the test equipment.
4. Crane or forklift (Lifting Device)
5. Straps as required

Procedure

Preparation the Test Device

The test device is to be cooled to a temperature of -40° F prior to each test.

Test One

1. The test unit in the 'Standard' configuration will be secured to the weight assembly by a web strap or other device as shown in figure 6.1.
2. A two inch wide web strap will be positioned at the center of the handle as shown in the figure.
3. The strap will be connected to the scale and the scale will be connected to the lifting device.
4. The temperature of the device will be recorded.
5. The test assembly will be raised clear of all supports and a total weight reading will be recorded.
6. The weight will remain suspended for one minute.
7. The handle will be inspected for damage or failure.

8. If the handle has passed this test the device will be reconfigured for test two.

Test Two

9. The test unit in the 'Pipeliner' configuration will be secured to the weight assembly by a web strap or other device as shown in figure 6.2.
10. A two inch wide web strap will be positioned at the center of the handle as shown in the figure.
11. The strap will be connected to the scale and the scale will be connected to the lifting device.
12. The temperature of the device will be recorded.
13. The test assembly will be raised clear of all supports and a total weight reading will be recorded.
14. The weight will remain suspended for one minute.
15. The handle will be inspected for damage or failure.
16. If the handle has passed this test the device will be reconfigured for test two.
17.

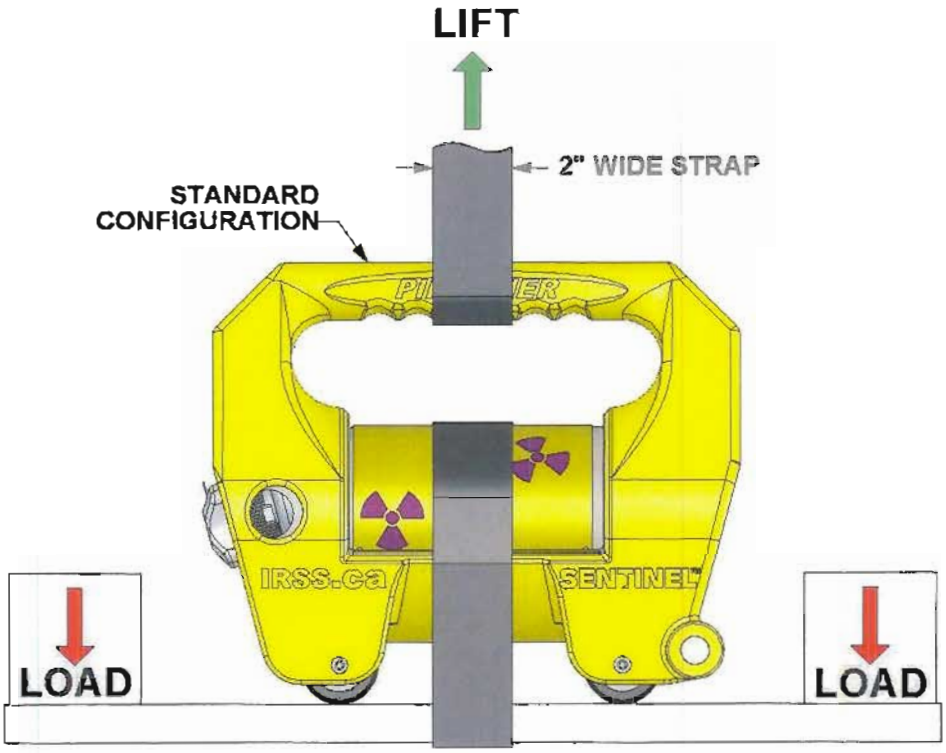

FIGURE 6.1 MODEL 880 PIPELINER - STANDARD CONFIGURATION TEST SETUP

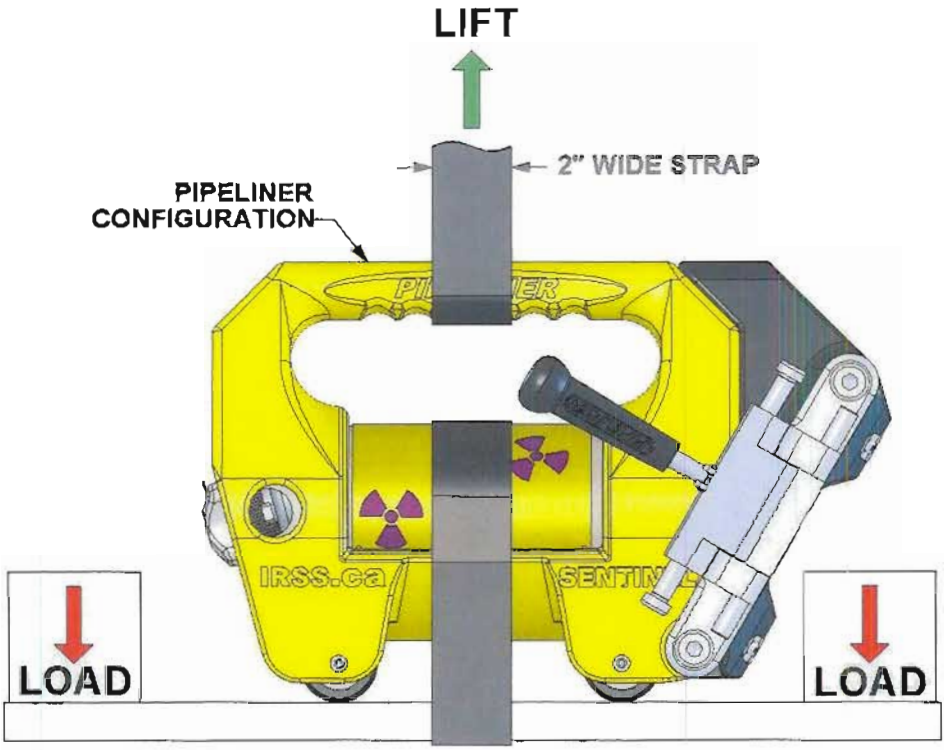

FIGURE 6.2 MODEL 880 PIPELINER - PIPELINER CONFIGURATION TEST SETUP

Roles and Responsibilities

The responsibilities of the groups identified in this plan are:

- **Engineering** executes the tests according to the test plan and summarizes the test results. Engineering also provides technical input to assist Regulatory Affairs and Quality Assurance as needed.

- **Regulatory Affairs** monitors the tests and reviews test reports for compliance with regulatory requirements.

- **Quality Assurance** oversees test execution and test report generation to assure compliance with the QSA Global Quality Assurance Program.

- **Engineering**, **Regulatory Affairs** and **Quality Assurance** are jointly responsible for assessing test and specimen conditions relative to the requirements of ISO 3999-1:2004(E), Part 1: Section 5.8.4.3

- **Quality Control** is responsible for ensuring test and specimen data is measured and recorded throughout the test cycle.

Section 7 Final Test Assessment

After all the tests have been completed, evaluate the condition of the test specimen and assess its performance relative to the test requirements of standard:

ISO 3999-2004(E), Radiographic Protection – Apparatus for Industrial Gamma Radiography
Part 1: Specifications for Performance, Design, and Tests
Sect 5.8.4.3 Tests for Exposure Containers, Handle, Attachment Part or Lifting Mount

Test Plan 188
Handle, Attachment Part or Lifting Mount

Material and Equipment:

Test device (Model 880) serial number: _____ Configuration: ☐ Standard ☐ Pipeliner

Weight of test device (Model 880): _____ Total weight of test equipment: _____

Scale: _____

Unit complies with IRSS "Work instruction for performing Pipeliner Retro Fit" Rev 1 _____

Quality Control

Test Procedure:

1. Prepare test specimen as described in "Construction and Condition of Test Specimen".
2. Cool the device to -40° F
3. Secure device to plate and add weight to 25 times weight of test specimen as shown in Fig. 6.1. or 6.2
4. Record the device temperature. _____
5. Lift test specimen and weight from middle of handle with crane.
6. Record total weight. _____
7. Inspect test handle for cracks or other visible damage.

Damage and/or operational malfunctions:

_____

_____

_____

_____

Test Assessment:

_____

_____

_____

Recorded by: _____ Date: _____

Witnessed by: _____ Date: _____

WORKSHEET 8.1 HANDLE, ATTACHMENT PART OR LIFTING MOUNT

REVISIONS				
REV.	ERF	DESCRIPTION	APPROVALS	DATE
A	2277	INITIAL RELEASE	SEE TITLE BLOCK	

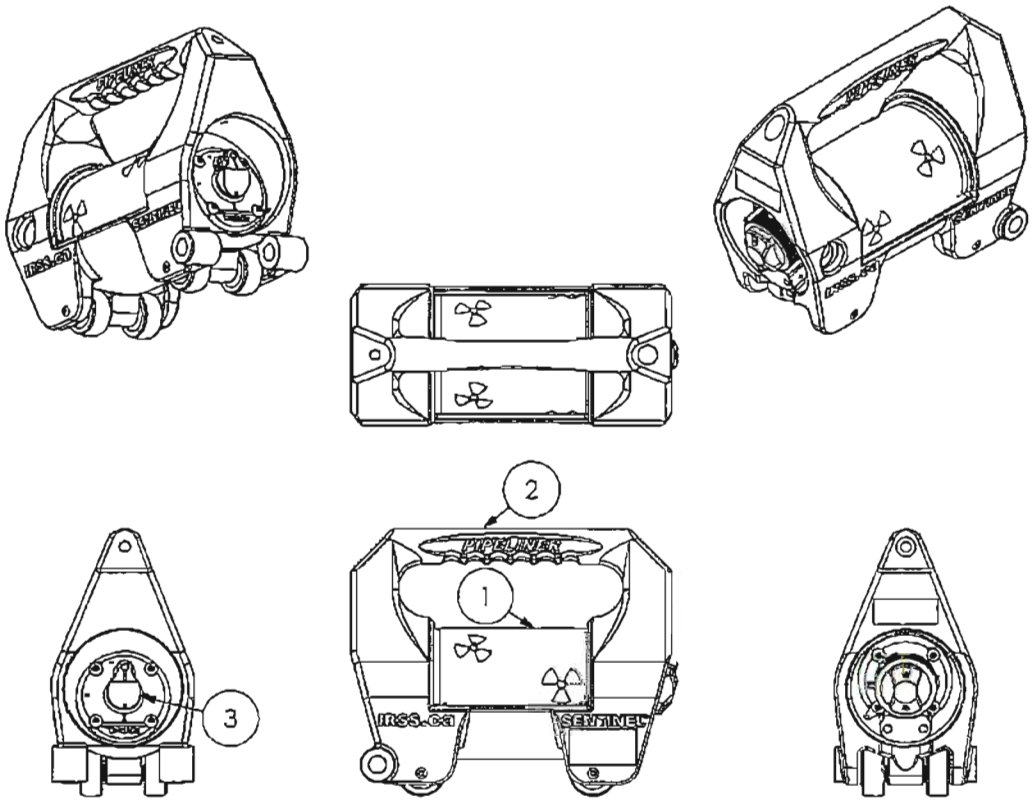

MAXIMUM ASSEMBLY WEIGHT AS SHOWN: 55 LBS

ITEM	NUMBER	QTY	TITLE
4	424-9	1	SIMULATED SOURCE CAPSULE - NOT SHOWN
3	KIT018	1	FRONT PLATE - DETENT RETROFIT KIT
2	PL1000H	1	PIPELINER JACKET ASSEMBLY
1	88015	1	MODEL 880 150 Ci BODY ASSEMBLY

UNLESS OTHERWISE SPECIFIED:

1. DIMENSIONS ARE IN INCHES.
2. DIMENSIONS APPLY AFTER FINISH.
3. NOTES APPLY TO ALL SHEETS.
4. REMOVE ALL BURR & SHARP EDGES.
5. 63 RMS MAX. SURFACE ROUGHNESS.
6. DO NOT SCALE DRAWING.

TOLERANCES:

FRACTIONAL: ± 1/64
TWO PLACE DECIMAL: ±0.01
THREE PLACE DECIMAL: ±0.005
ANGULAR: MACH ±1° & BEND ±5°

THE INFORMATION CONTAINED IN THIS DRAWING IS THE SOLE PROPERTY OF QSA-GLOBAL INC. ANY REPRODUCTION IN PART OR AS A WHOLE WITHOUT THE WRITTEN PERMISSION OF QSA-GLOBAL INC IS PROHIBITED

DRAWN 09 DEC 09
APPR. 10 Dec 09
MATERIAL: SEE BOM
FINISH: NA
SAFETY CLASS: A
THIRD ANGLE PROJECTION

QSA GLOBAL
40 NORTH AVE, BURLINGTON, MA 01803

TITLE: PIPELINER TYPE B TRANSPORT DEVICE

SIZE A | DWG. NO. 88095 | REV. A
SCALE: 1:6 | SHEET: 1 OF 1

CAD FILE: K:\Product Drawings\880\Solidworks Files\88095.SLDDRW

ATTACHMENT 9.1 DRAWING 88095 REV A, PIPELINER TYPE B TRANSPORT DEVICE

REVISIONS				
REV.	ERF	DESCRIPTION	APPROVALS	DATE
A	2277	INITIAL RELEASE	SEE TITLE BLOCK	

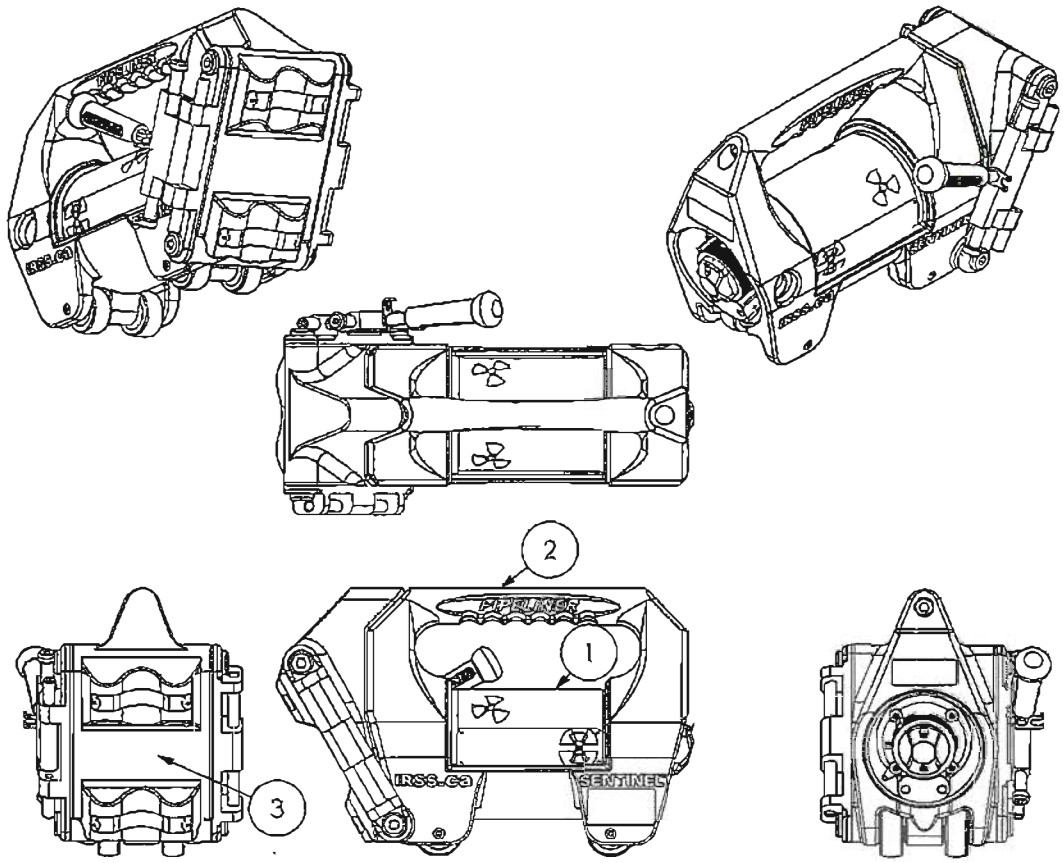

MAXIMUM ASSEMBLY WEIGHT AS SHOWN: 70 LBS

ITEM	NUMBER	QTY	TITLE
4	424-9	1	SIMULATED SOURCE CAPSULE - NOT SHOWN
3	KIT018	1	FRONT PLATE - DETENT RETROFIT KIT - NOT VISIBLE
2	PL1000	1	PIPELINER ASSEMBLY
1	88015	1	MODEL 880 150 Ci BODY ASSEMBLY

UNLESS OTHERWISE SPECIFIED:

1. DIMENSIONS ARE IN INCHES.
2. DIMENSIONS APPLY AFTER FINISH.
3. NOTES APPLY TO ALL SHEETS.
4. REMOVE ALL BURR & SHARP EDGES.
5. 63 RMS MAX. SURFACE ROUGHNESS.
6. DO NOT SCALE DRAWING.

TOLERANCES:

FRACTIONAL: ± 1/64
TWO PLACE DECIMAL: ±0.01
THREE PLACE DECIMAL: ±0.005
ANGULAR: MACH ±1° & BEND ±5°

THE INFORMATION CONTAINED IN THIS DRAWING IS THE SOLE PROPERTY OF QSA-GLOBAL INC. ANY REPRODUCTION IN PART OR AS A WHOLE WITHOUT THE WRITTEN PERMISSION OF QSA-GLOBAL INC IS PROHIBITED.

DRAWN: 09 DEC 09
APPR.: 10 Dec 09
MATERIAL: SEE BOM
FINISH: NA
SAFETY CLASS: A
THIRD ANGLE PROJECTION

QSA GLOBAL
40 NORTH AVE, BURLINGTON, MA 01803

TITLE: PIPELINER ASSEMBLY
SIZE: A
DWG. NO: 88095-1
REV: A
SCALE: 1:0
SHEET 1 OF 1

CAD FILE: K:\Product Drawings\880\Solidworks Files\88095-1.SLDDRW

ATTACHMENT 9.2 DRAWING 88095-1 REV A, PIPELINER ASSEMBLY

2.12.11 Test Report #1 for Test Plan 186 Rev 1 (minus Sections 8.4 & 8.5)

QSA GLOBAL	Document Number F-E-1808-2 Test Report Cover Sheet	Revision 1

TEST REPORT #1
FOR TEST PLAN 186

Model 880 Pipeliner
Type (B) Transport Package Test Results

10 CFR 71, Packaging and Transportation of Radioactive Materials
Subpart F – Package, Special Form, and LSA-III Tests
Sect 71.71 Normal Conditions of Transport
Sect 71.73 Hypothetical Accident Conditions

Originator	Paul Rice	Date: 12 AUG 2010

APPROVALS		
Engineering		Date: 23 Jun 10
Regulatory		Date: 11 Aug 10
Quality Assurance		Date: 12 Aug 10

Contents Page

SECTION 1 ..... INTRODUCTION 3

SECTION 2 ..... CONSTRUCTION AND ACCEPTANCE OF TEST SPECIMENS 3

FIGURE 2.1 PIPELINER JACKET ASSEMBLY, IRSS PART NO PL1000H 4

FIGURE 2.2 MODEL 880 PROJECTOR WITH PIPELINER JACKET, DN 88095 Rev A 5

FIGURE 2.3 MODEL 880 PROJECTOR WITH PIPELINER JACKET - SECTION VIEWS 6

SECTION 3 ..... TEST OBJECTIVES AND ORIENTATIONS 7

FIGURE 10.1.1 NORMAL CONDITIONS - 1.2M DROP 1 8

FIGURE 10.1.2 NORMAL CONDITIONS - 1.2M DROP 2 8

FIGURE 10.2.1 ACCIDENT CONDITIONS - 9M DROP 1 9

FIGURE 10.2.2 ACCIDENT CONDITIONS - 9M DROP 2 9

FIGURE 10.3.1 ACCIDENT CONDITIONS - PUNCTURE 1 10

FIGURE 10.3.2 ACCIDENT CONDITIONS - PUNCTURE 2 10

SECTION 4 ..... TEST DATA 11

SECTION 5 ..... FINAL INSPECTION AND ASSESSMENT 25

SECTION 6 ..... SUMMARY 30

SECTION 7 ..... CONCLUSION 31

SECTION 8 ..... ATTACHMENTS 32

SECTION 8.1 WORKSHEETS 33

SECTION 8.2 TEST PLAN 186 34

SECTION 8.3 PROFILE REPORTS 35

SECTION 8.4 QSA PRODUCTION RECORDS INCLUDING COMPLETE PROFILE RECORDS 36

SECTION 8.5 IRSS PRODUCTION RECORDS 37

SECTION 8.6 EQUIPMENT CERTIFICATION RECORDS 38

Drop Pad – T10740 38

Puncture Billet – T10143 39

Omega Temperature Gauge – T198776 40

O'Haus Digital Scale – 0009986-6CE 42

Section 1 Introduction

This document describes the mechanical test results for the Model 880 Pipeliner Projector to meet NRC requirements for Type B(U)-96 packages as described in the Code of Federal Regulations, 10 CFR Part 71 , revised as of January 1, 2009.

The test report also covers the criteria stated in the International Atomic Energy Agency (IAEA), Safety Standards Series No. TS-R-1, Regulations for the Safe Transport of Radioactive Material, 1996 Edition, Section VI.

This document describes the test package specifications, testing equipment, testing results, describes the package orientations for the different test specimens and records of the tests performed and results of those tests.

This series of tests evaluated the Pipeliner Jacket assembly mounted on the Model 880 Projector.

Section 2 Construction and Acceptance of Test Specimens

The Model 880 assemblies used for these devices were originally manufactured by QSA Global as production Model 88015.

The assemblies were retrofitted to the PipeLiner configuration by QSA Global production personnel under TMI279.

The PipeLiner retrofit components for these devices were supplied and assembled by IRSS.

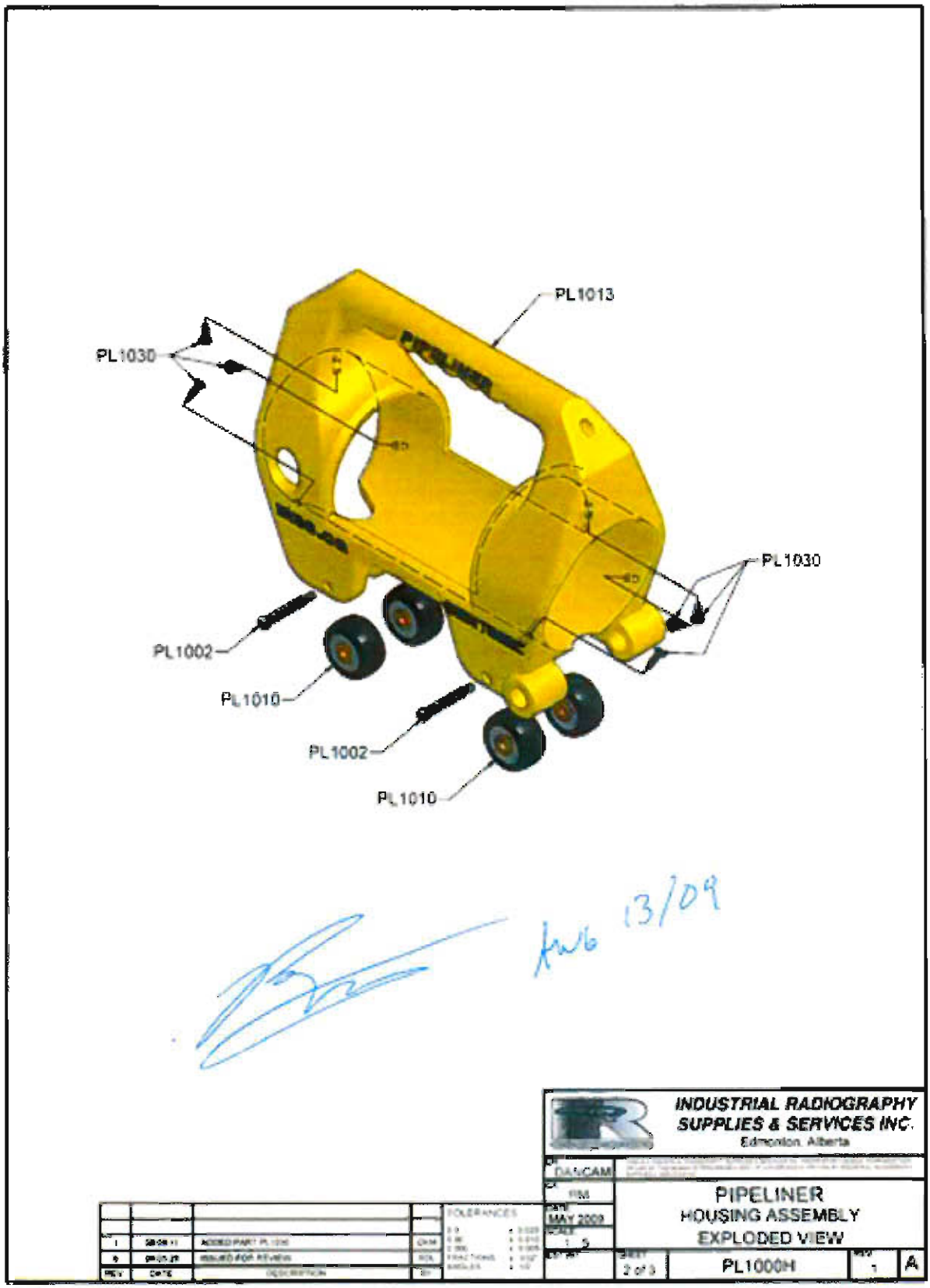

FIGURE 2.1 PIPELINER JACKET ASSEMBLY, IRSS PART NO PL1000H

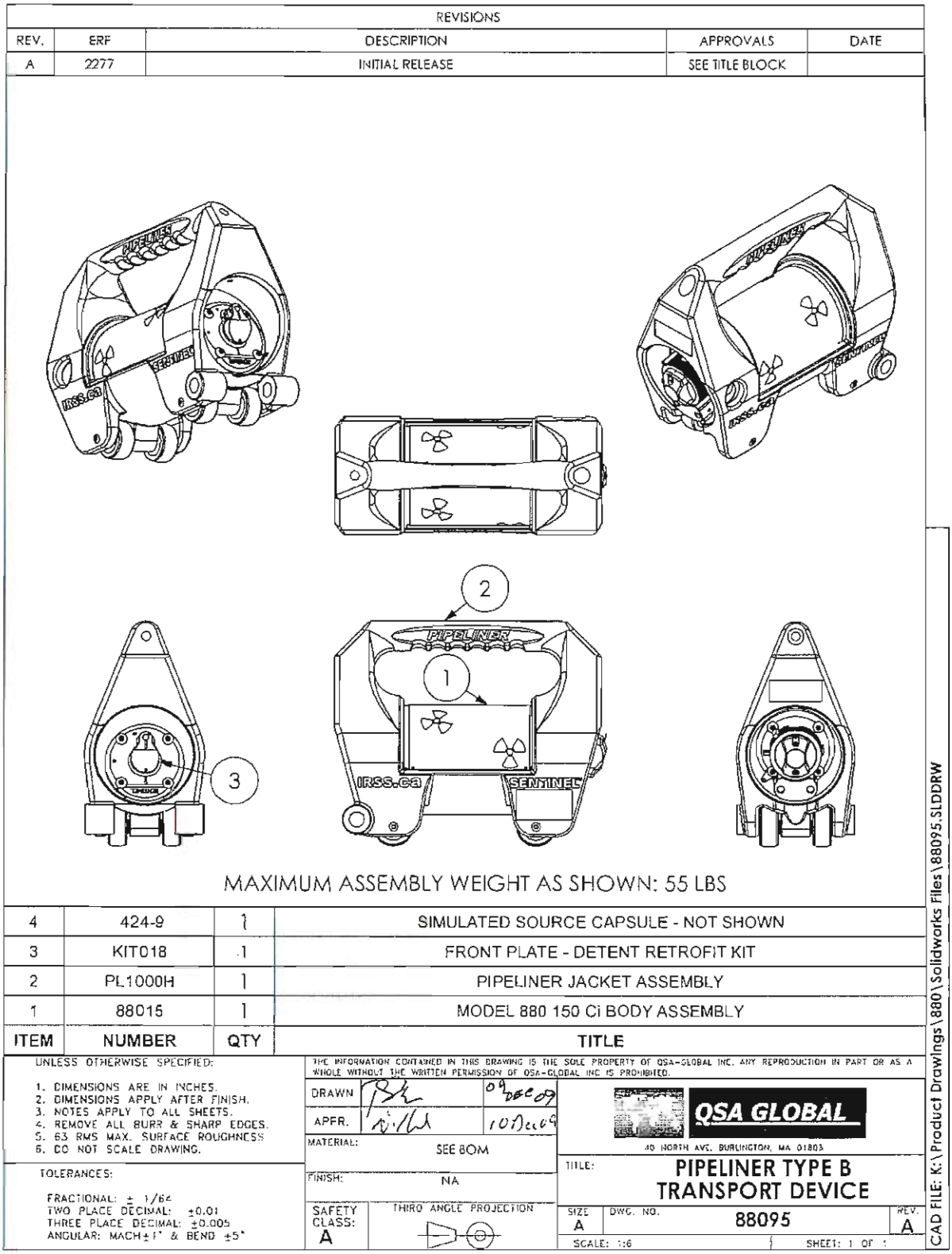

FIGURE 2.2 MODEL 880 PROJECTOR WITH PIPELINER JACKET, DN 88095 Rev A

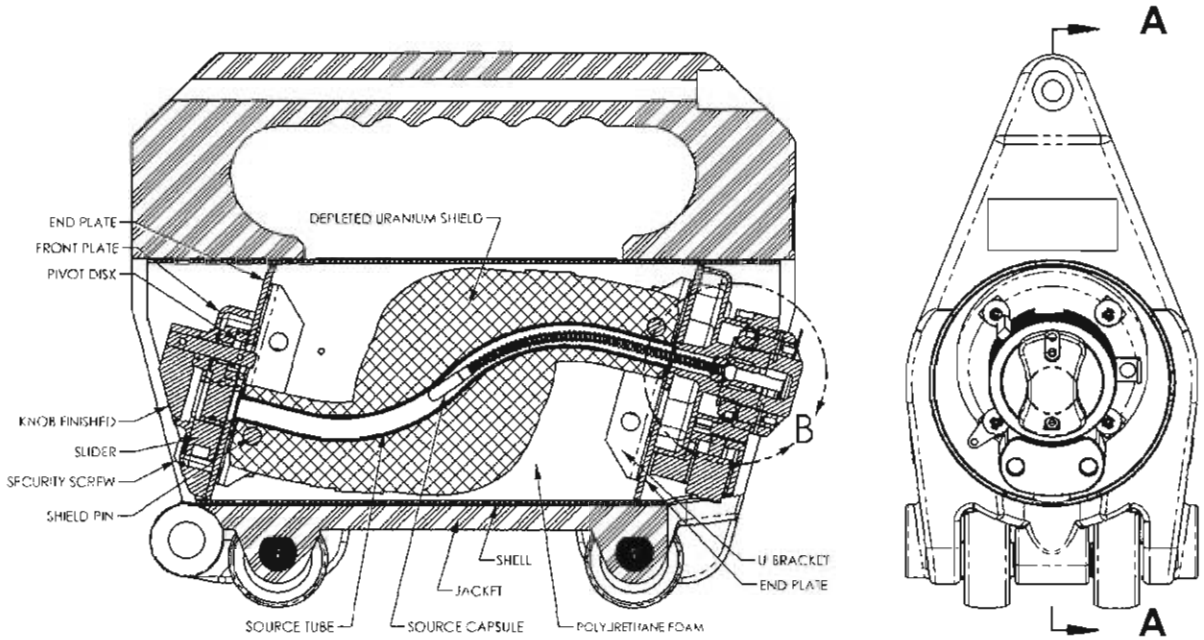

SECTION A-A

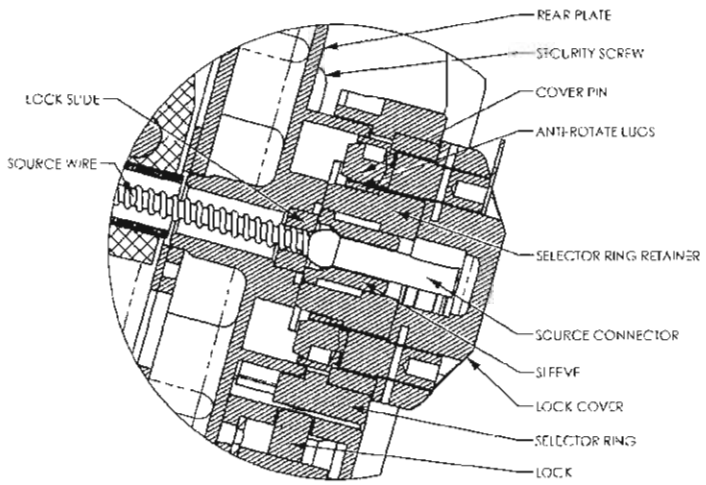

DETAIL B

FIGURE 2.3 MODEL 880 PROJECTOR WITH PIPELINER JACKET - SECTION VIEWS

Section 3 Test Objectives and Orientations

Objectives

The purpose of this series of tests is to demonstrate that the Model 880 Pipeliner projector complies with the Type B(U)-96 transport package test requirements as described in the Code of Federal Regulations, 10 CFR Part 71, revised as of January 1, 2009 and the International Atomic Energy Agency (IAEA), Safety Standards Series No. TS-R-1, Regulations for the Safe Transport of Radioactive Material, 1996 Edition, Section VI.

Orientations

Normal Conditions Test	Para.	Specimen	Diagram
1.2m Drop 1.	71.71(c)(7)	TP186(A)	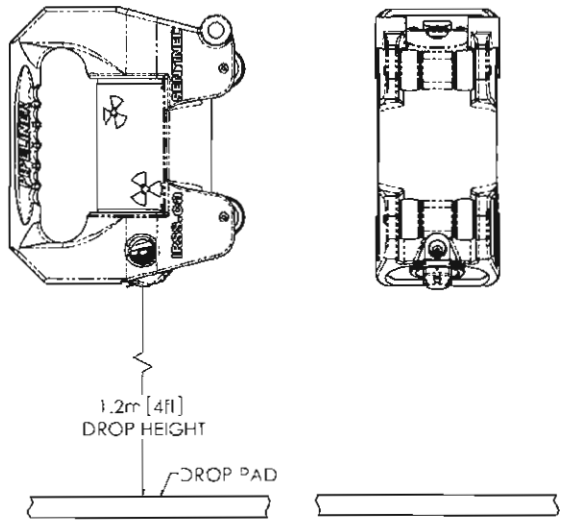
FIGURE 10.1.1 NORMAL CONDITIONS - 1.2M DROP 1			
1.2m Drop 2.	71.71(c)(7)	TP186(B)	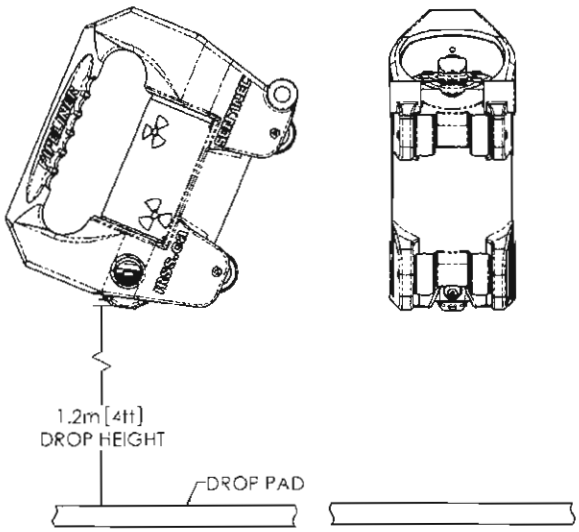
FIGURE 10.1.2 NORMAL CONDITIONS - 1.2M DROP 2			

Accident Conditions Test	Para.	Specimen	Diagram
9m Drop 1.	71.73(c)(1)	TP186(A)	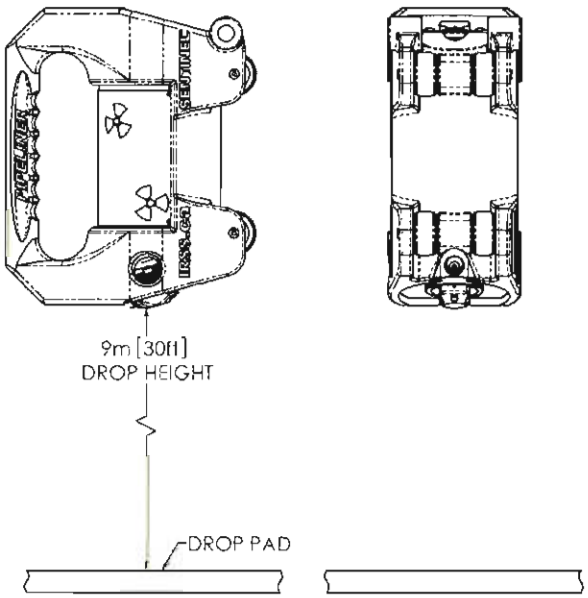

FIGURE 10.2.1 ACCIDENT CONDITIONS - 9M DROP 1

9m Drop 2.	71.73(c)(1)	TP186(B)	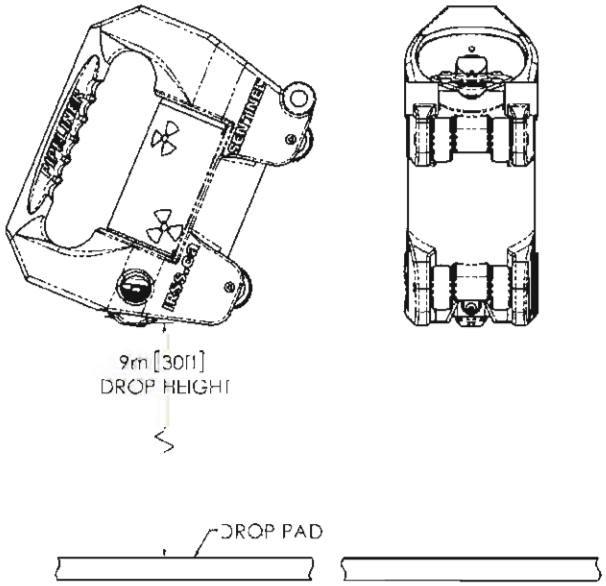

FIGURE 10.2.2 ACCIDENT CONDITIONS - 9M DROP 2

Accident Conditions Test	Para.	Specimen	Diagram
Puncture 1.	71.73(c)(3)	TP186(A)	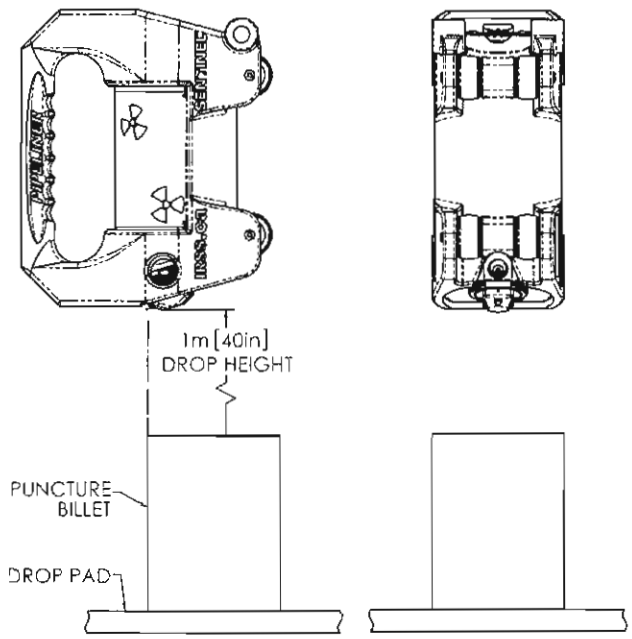
FIGURE 10.3.1 ACCIDENT CONDITIONS - PUNCTURE 1			
Puncture 2.	71.73(c)(3)	TP186(B)	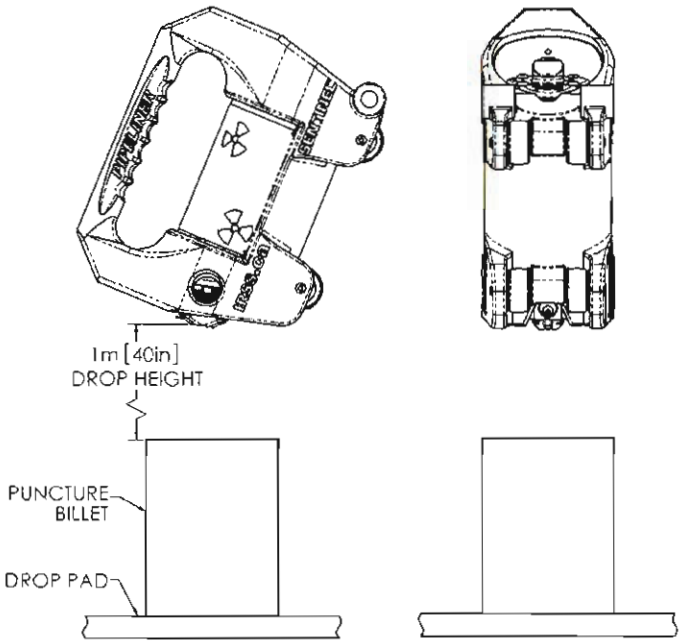
FIGURE 10.3.2 ACCIDENT CONDITIONS - PUNCTURE 2			

1.2m Free Drop Test Set-up

Serial Number TP186A

Initial setup for TP186A, 4' foot drop test, Pipeliner suspended from fork-truck over drop pad QSA Global 40 North Ave Burlington MA site and Post-drop damage.

Pre-Drop

Impact Camera 1

Impact Camera 2

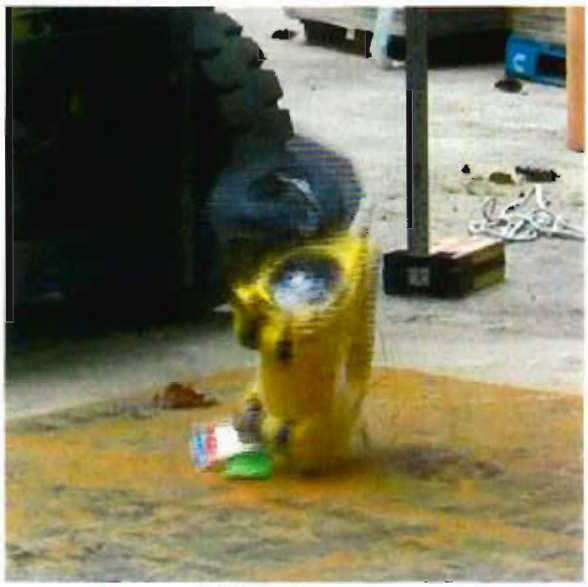

First Bounce

Post drop

Post drop showing damage to rear plate assembly

Serial Number TP186B

Initial setup for TP186B, 4' foot drop test, Pipeliner suspended from fork-truck over drop pad QSA Global 40 North Ave Burlington MA site and Post-drop damage.

Pre-Drop

Impact

First Bounce

Post drop showing damage to rear plate assembly

Post drop showing cracks in jacket

Post drop showing overall damage to assembly

1.2m Free Drop Test Results

Serial Number TP186A: Impact was as planned, hitting directly on the lock cover with the 880 axis vertical. The impact crushed and cracked the lock cover. It also broke the head off on of one lock cover mounting screw.

Serial Number TP186B; Impact was as planned, hitting directly on the lock cover with the 880 axis 22.5° to the impact surface. The iinpact dented the lock cover. It also cracked the PipeLiner jacket.

1.2m Free Drop Test Assessment

Both units met the requirements of this test. Although they sustained some damage they remained fully functional and the sources remained in the original location.

9m Free Drop Test Set-up

Serial Number TP186A

Initial setup for TP186A, 30' foot drop test, Pipeliner suspended from crane over drop pad QSA Global 40 North Ave Burlington MA site and Post-drop damage.

Pre-Drop

Impact

First Bounce

Post-Drop

Post drop showing cracks in jacket

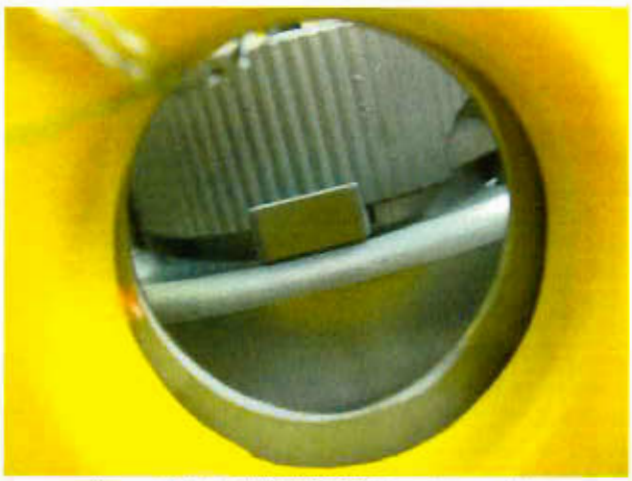

Rear Plate PN 88021 bent in 1/8"

Lock Cover PN 88023-1 Broken

Cover Pin PN 88023-2 Broken

Serial Number TP186B

Initial setup for TP186B, 30' foot drop test, Pipeliner suspended from crane over drop pad QSA Global 40 North Ave Burlington MA site and Post-drop damage.

Pre-Drop

Pre-Impact

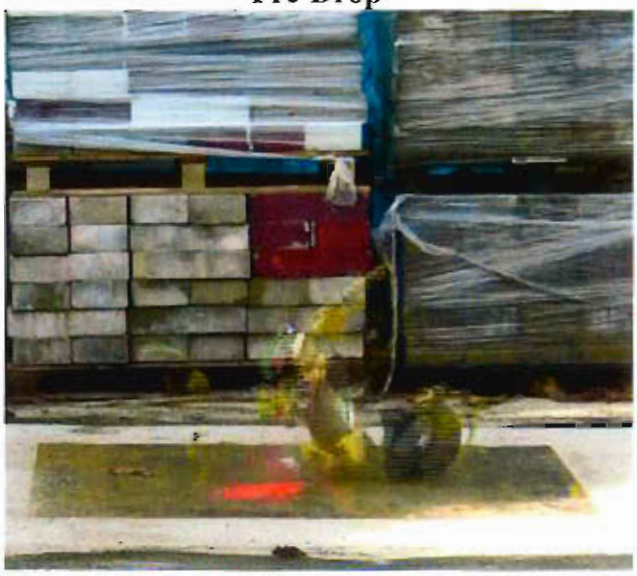

Impact

First Bounce

Post-Drop

Post drop showing damage to rear plate assembly

Post drop showing overall damage to assembly

Rear Plate assembly damage

Jacket mounting screw

Jacket mounting screw

9m Free Drop Test Results

Serial Number TP186A; Impact was as planned, hitting directly on the lock cover with the 880 axis vertical. The impact caused numerous cracks in the pipeliner jacket.The lock cover assembly received additional damage including a broken pin, but remained in place. The rear plate casting was bent inward. The source position moved approximately 1/8 inch.

Serial Number TP186B; Impact was as planned, hitting directly on the lock cover with the 880 axis 22.5° to the impact surface. The pipeliner jacket exploded into 5-6 major pieces and numerous smaller pieces. The jacket mounting screws at the front plate end bent the 880 shell. The Rear plate and lock assemblies received additional damage and the 880 shell was bent inward.

9m Free Drop Test Assessment

Both units passed this test.
Serial Number TP186A received additional damage to the lock cover and rear mounting plate assembly causing the source to move, but the source was secure and the shielding appears to be intact.
Serial Number TP186B received damage to the 880 shell and complete loss of the Pipeliner jacket assembly, but the source remained secure and in its original position.

Puncture Test Set-up

Serial Number TP186A

Initial setup for TP186A, 40 inch puncture test, Pipeliner suspended from fork-truck over drop pad QSA Global 40 North Ave Burlington MA site and Post-drop damage.

Setup

Pre Drop

1st Impact

1st Bounce

2nd Impact

3rd Impact

Post drop

Post drop showing damage to rear plate assembly

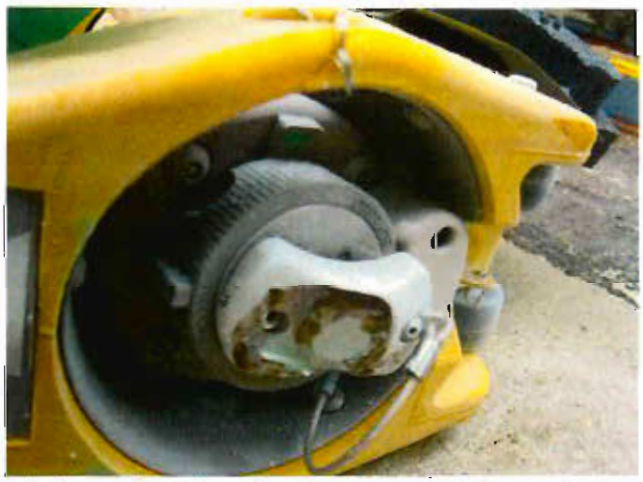

Post drop showing damage to rear plate assembly

Post drop showing damage to rear plate assembly

Post drop showing damage to rear plate assembly

Serial Number TP186B

Initial setup for TP186B, 40 inch puncture test, Pipeliner suspended from fork-truck over drop pad QSA Global 40 North Ave Burlington MA site and Post-drop damage.

Test unit TP186B was not cooled for this test. The Pipeliner jacket assembly, the only component made from material not rated for -40° F, was lost as a result of the previous test. As all other components of the device are rated for the full operational range of temperatures, -40° F was no longer considered the worst case condition.

Alignment

Alignment

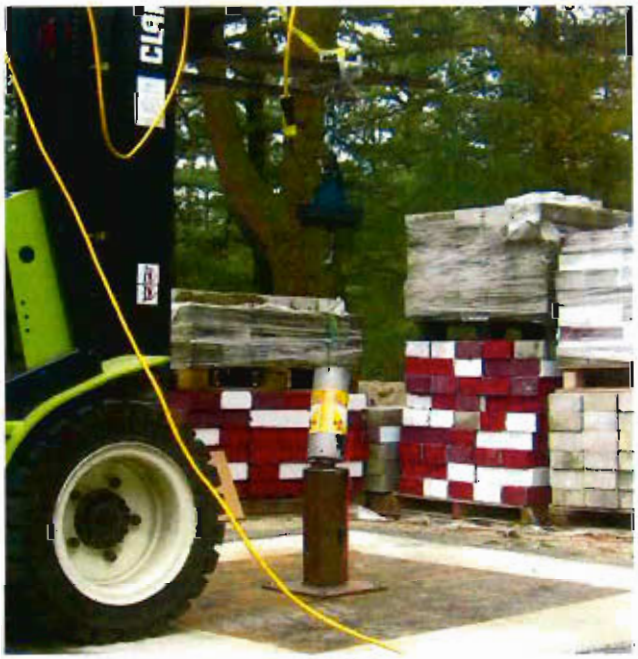

Setup

Pre Drop

Impact

After Impact

Post drop showing damage to rear plate assembly

Puncture Test Results

Serial Number TP186A; Impact was as planned, hitting directly on the lock cover with the 880 axis vertical. After the initial impact the side of the device impacted the post. The impact caused additional cracking of the pipeliner jacket. The lock cover assembly received additional denting damage but remained in place. The rear plate casting was bent farther inward. Source position has moved approximately an additional 1/16 inch.

Serial Number TP186B; Impact was as planned, hitting directly on the lock cover with the 880 axis 22.5° to the impact surface. The lock assembly was centered over the post. The lock cover assembly received additional denting damage but remained in place. The 880 shell was bent in the areas around the front and rear plates

Puncture Test Assessment

Both units passed this test.

Serial Number TP186A received additional damage to the lock cover and rear mounting plate assembly causing the source to move an additional amount, but the source remained secure and the shielding appears to be intact.

Serial Number TP186B was tested without the Pipeliner jacket assembly, lost during the previous test and at ambient temperature, The lock cover received additional damage and the key lock would no longer operate, but the source remained secure and in its original position.

After completion of the drop testing the test units were inspected, disassembled and evaluated for damage prior to profiling.

Serial Number TP186A

Rear Plate assembly overall view

Rear Plate assembly side view

The key lock would not release, the selector ring would not turn and the slide would not move. The lock cover was still in place, but broken. The rear plate was collapsed inward approximately 1/8". The rear plate mounting screws were bent and the threads stripped when removed. The rear plate assembly was frozen in place and required the use of a hammer and pry bar to be removed from the 880.

Lock Cover assembly inside

Lock Cover assembly outside

The lock cover was cracked, one screw was broken and one pin was broken. The pin mounting holes were deformed. The lock cover is an aluminum part designed to be sacrificial and protect the source connector and lock assembly.

Key Lock pin

Lock Slide

The key lock pin was deformed and jammed in the selector ring
The lock slide was bent and jammed between the rear plate and the selector ring retainer

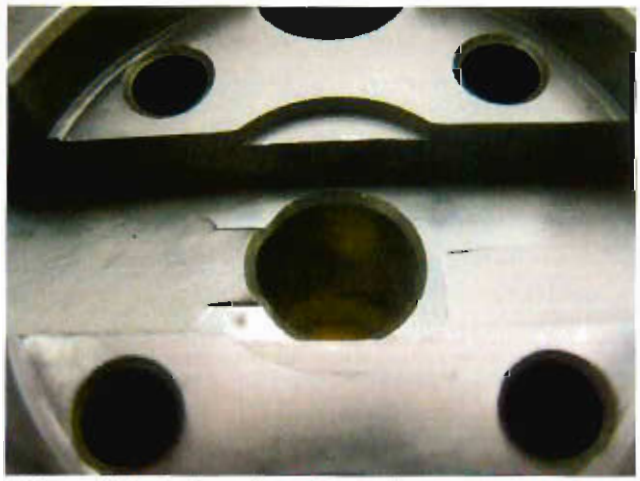

Rear Plate showing dents from Lock Slide

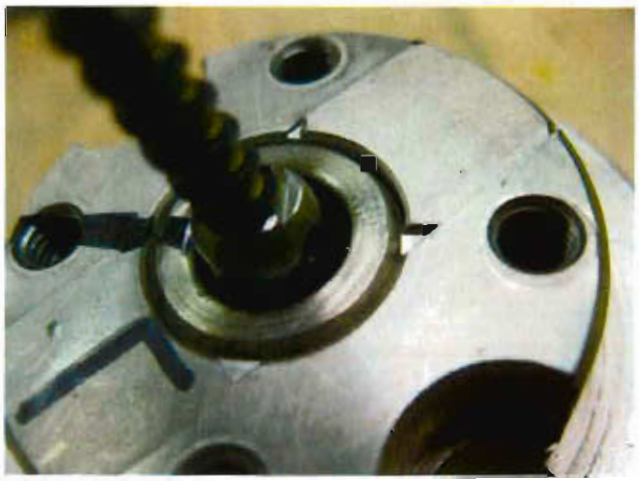

Selector Ring retainer showing dents from Lock Slide

The slide left an impression in the rear plate.
The slide also peened over the selector ring retainer locking the sleeve in place.

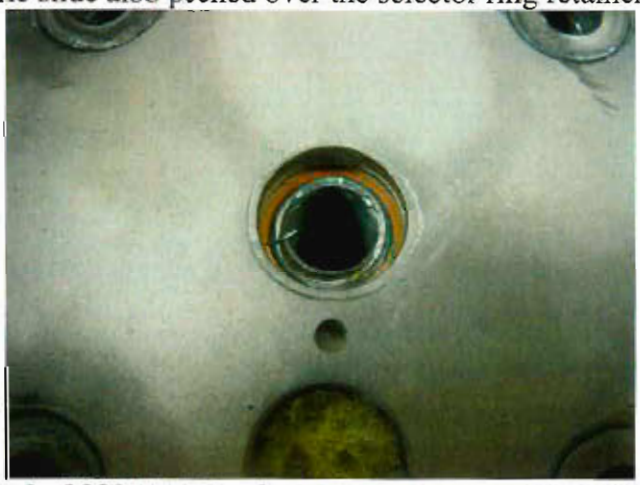

End of 880 S-Tube showing dents from Rear Plate

Rear Plate showing dents from 880 S-Tube

The rear plate 'hub' had been forced into the end of the 880 S-Tube. This was the reason the rear plate assembly was difficult to remove. The S-Tube and end plate of the 880 were deformed, note the areas

around the s-tube and mounting screws. The hub of the rear plate was also deformed causing the end of the hub to expand in diameter (Ø.6235 max after removal) and jam in the 880 shell end plate thru hole.

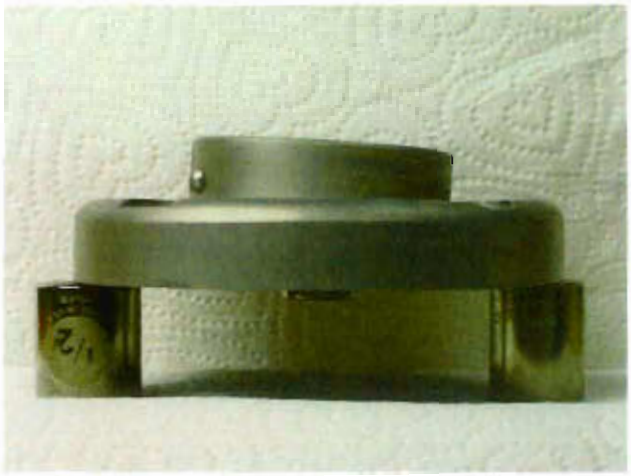

Rear Plate showing deformation

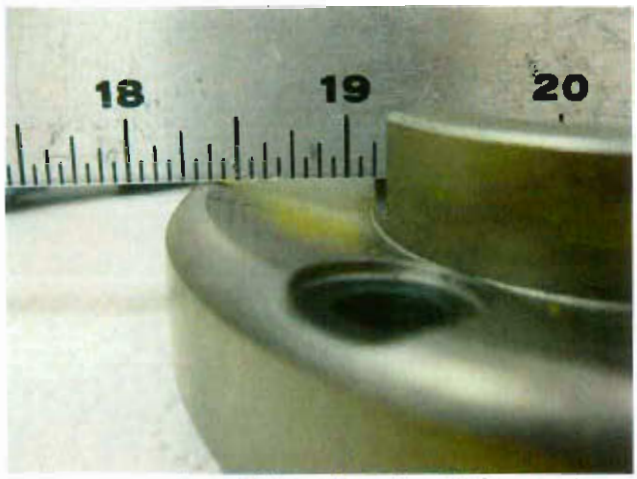

Rear Plate showing deformation

The rear plate was deformed by the impact. The area of greatest deformation was at the section of the selector ring that has clearance for the slide. This was due to the selector ring supporting the remaining section while this section was free to collapse.

Source Wire connector showing bend

Source Wire connector showing bend

The source wire connector was bent due to the collapse of the lock cover assembly. This caused the source to be jammed into the sleeve. A light tap with a hammer was sufficient to remove the source once the rear plate was disassembled. The source wire was intact with both the source and the connecter firmly attached.

Serial Number TP186B

Rear Plate assembly overall view

Rear Plate assembly with lock removed

The key lock would not release so the lock assembly was removed. The Posilock device then functioned correctly.

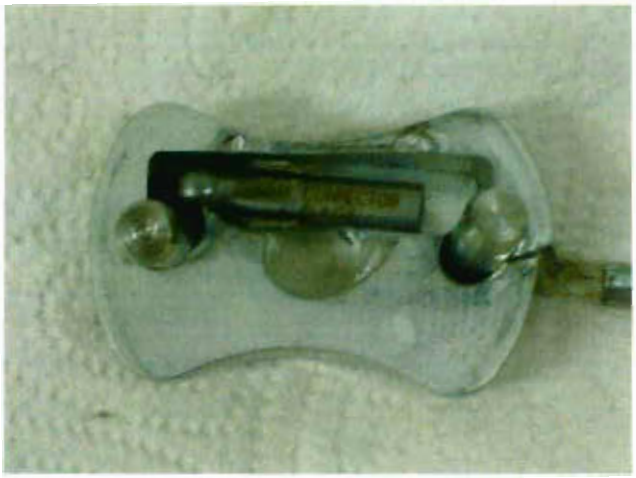

Lock Cover assembly inside

Lock Cover assembly outside

The lock cover assembly was broken and the pins were misaligned.
The lock cover is an aluminum part designed to be sacrificial and protect the source connector and lock assembly.

Lock Cover assembly with crack at screw

Lock Cover assembly with crack at rollpin

Key Lock pin

The key lock pin was deformed and jammed in the selector ring

Section 6 Summary

Serial Number TP186A Although the device received extensive damage and required disassembly to remove the source, the source was secure at all times. The total change in location of the source caused by the damage was approximately 3/16 inch.
The device was reassembled as much as possible, a live source was secured and the device was profiled.

Serial Number TP186B Although the device was damaged and required removal of the key lock assembly to remove the source, the source was secure at all times.
A live source was secured and the device was profiled.

Section 7 Conclusion

Both devices evaluated in this Test Report meet the Type B transport requirements as described in QSA Test Plan 186 and 10 CFR 71, Packaging and Transportation of Radioactive Materials, Subpart F – Package, Special Form, and LSA-III Tests, Sect 71.71 Normal Conditions of Transport and Sect 71.73 Hypothetical Accident Conditions.

After the initial 4 foot drop both units were functional and after all testing was complete the sources were secure in both devices.

For normal conditions of transport (10 CFR 71.43(f) states there should be no loss or dispersal of radioactive contents, no significant increase in external surface radiation levels and no substantial reduction in the effectiveness of the packaging.
IAEA Safety Standards Series No. TS-R-1, Para 622 (b) stipulates that the loss of shielding integrity should not result in more than a 20% increase in the radiation level at any external surface of the package.

For accident conditions 10 CFR 71.51(a) states there should be no escape of radioactive materials greater than A_2 in one week and no external dose rate greater than 1 R/hr at 1m from the external surface with the maximum radioactive contents which the package is designed to carry.

The pre and post test profiles for both test units, attached to this report, are within the acceptance criteria of less than a 20% increase as required by IAEA Safety Standards Series No. TS-R-1, Para 622 (b) and a maximum of 1.0 R/H at 1 meter adjusted dose rate as required by 10 CFR 71.51(a).

Additionally with the exceptions noted below, both devices were tested and passed at -40° F.

Test unit TP186A, the temperature recorded for the 9M free drop test was -39° F. This reading was a surface reading on the Pipeliner jacket handle, the warmest area of the assembly. Readings taken on a reference unit equipped with internal and external temperature sensors indicted that the core temperature of the jacket was 5°-10° F colder than the surface temperature.

Test unit TP186B was not cooled for the puncture test. The Pipeliner jacket assembly, the only component made from material not rated for -40° F, was lost as a result of the previous test. As all other components of the device are rated for the full operational range of temperatures, -40° F was no longer considered the worst case condition for this test.

Section 8.1 Worksheets

WORKSHEET 15.2 DROP & PUNCTURE TEST CHECKLIST

Test: 1.2m (4-foot) Free Drop Test (10 CFR 71.71(c)(7))		
Test Location: QSA Global, 40 North Ave Burlington, MA		
Step	**Data**	
1. Record test specimen serial number:	TP186B	
2. Record the test specimen weight:	54 lbs	
3. Record the ambient temperature (°C):	66°F (19°C)	Instrument S/N: T198776
3. Record the test unit temperature (°C):	-43°F (-42°C)	Instrument S/N: T198776
4. Identify set-up orientation figure:	TP186 Figure 10.1.2	
5. Record drop height.	48 inches (1.22 meters)	
6. Photograph set-up in at least two perpendicular planes. ✓		
7. Begin video recording of the test so that impact is recorded. ✓		
8. Release the test specimen. ✓		
9. Stop the video recorder. Ensure the point of impact and orientation specified in the plan has been achieved. ✓		
10. Record the damage to the test specimen. Use a separate sheet and attach, if needed. ✓		
11. Engineering, Regulatory Affairs and Quality Assurance make a preliminary assessment relative to 10 CFR 71. Record the assessment on a separate sheet and attach.		
Test witnessed by (Signature)	**Print Name**	**Date**
Engineering:	PAUL RICE	12 APR 2010
Regulatory Affairs:	C. P. [illegible]	28 Apr 10
Quality Assurance:	C. Roughan	11 Aug 2011

WORKSHEET 15.3 DROP & PUNCTURE TEST DATA SHEET

Test Unit Model/Serial No.: Model 88095 S/N TP186B	Test: 1.2m (4-foot) Free Drop Test (10 CFR 71.71(c)(7))
Test Date: 11 March 2010	Test Time: 2:00 PM

Describe drop orientation and drop height:

TP186 Figure 10.1.2. Oriented with the 880 axis 22.5° to the impact surface with the Rear Plate assembly down

Describe impact (location, rotation, etc.):

Impact was as planned, hitting directly on the lock cover with the 880 axis 22.5° to the impact surface.

Describe on-site inspection (damage, broken parts, etc.):

The impact dented the lock cover. It also cracked the PipeLiner jacket.

On-site test assessment:

- Was the test performed in accordance with 10 CFR 71, IAEA TS-R-1 1996, and this test plan? **Yes or No.**
- Does the test specimen meet the requirements of 10 CFR 71 and IAEA TS-R-1 1996 for this test? **Yes or No.**
- Are any changes to subsequent drop orientations needed to achieve maximum damage? **Yes or No**
  If yes, then identify and justify.
- Did sufficient damage occur to warrant additional drop? **Yes or No**
- Should testing continue with this test specimen? **Yes or No** If yes, next test: TP186 30 foot drop
- Will the test specimen pass the thermal test based on the accumulated damage assessment? **Yes or No**

Engineering: 15 APR 2010 **Regulatory:** 28 Jun 10 **QA:** 11 May 2010

Describe any post-test disassembly and inspection:

No dis-assembly was done at this time as additional testing is required on this device

Describe any change in source position (if possible):

Source position is unchanged

Describe results of radiography (if performed):

Not performed

Completed by: Paul Rice	Date: 12 APR 2010

WORKSHEET 15.4 TEST INSPECTION DATA SHEET

Test Specimen Serial No.: Model 88095 S/N TP186A	Last Test Performed: 1.2m (4-foot) Free Drop Test (10 CFR 71.71(c)(7))
Describe and measure (if appropriate) any damage or broken parts, etc.: The lock cover, PN 88023-1 Rev E, was dented. This is an aluminum part intended to absorb impact and protect the source. The pipeliner jacket, PN PL1013, cracked thru along 3 lines converging at one of the jacket mounting screws, PN PL1030	
Describe and measure (if appropriate) any signs of permanent strain or deformation: See the attached photos	
Describe the condition of the simulated source wire assembly. The source wire was still locked in position and had not moved	
Reassemble the package using a representative active source, making sure that the source position and the package configuration is the same as they were immediately after the last test. Measure and record a radiation profile of each test specimen in accordance with QSA Global Work Instruction WI-Q-1806.	
Compare the pre-test dose levels with post-test dose levels at the surface of the package and at 1 meter from the surface of the package. This test will be performed after all testing is complete	
Is a radiograph required to inspect for hidden component damage or failure? If radiography is performed, describe any damage or failures found. This test will be performed after all testing is complete	
Completed by: PAUL RICE	Date: 12 APR 2010

WORKSHEET 15.2 DROP & PUNCTURE TEST CHECKLIST

Test:	9M (30 foot) FREE DROP TEST (10 CFR 71.73(C)(1))
Test Location:	QSA Global, 40 North Ave Burlington, MA

Step	**Data**	
1. Record test specimen serial number:	TP186B	
2. Record the test specimen weight:	54 lbs	
3. Record the ambient temperature (°C):	66°F (19°C)	Instrument S/N: T198776
3. Record the test unit temperature (°C):	-43°F (-42°C)	Instrument S/N: T198776
4. Identify set-up orientation figure:	TP186 Figure 10.2.2	
5. Record drop height.	30 Feet (9.14 meters)	
6. Photograph set-up in at least two perpendicular planes. ✓		
7. Begin video recording of the test so that impact is recorded. ✓		
8. Release the test specimen. ✓		
9. Stop the video recorder. Ensure the point of impact and orientation specified in the plan has been achieved. ✓		
10. Record the damage to the test specimen. Use a separate sheet and attach, if needed. ✓		
11. Engineering, Regulatory Affairs and Quality Assurance make a preliminary assessment relative to 10 CFR 71. Record the assessment on a separate sheet and attach.		

Test witnessed by (Signature)	**Print Name**	**Date**
Engineering:	Paul Rice	12 APR 2010
Regulatory Affairs:	L. Podolak	28 Jun 10
Quality Assurance:	C. Roughan	4 Aug 2010

WORKSHEET 15.3 DROP & PUNCTURE TEST DATA SHEET

Test Unit Model/Serial No.: Model 88095 S/N TP186B	Test: 9M (30 foot) Free Drop Test (10 CFR 71.73(C)(1))
Test Date: 19 March 2010	Test Time: 11:00 AM

Describe drop orientation and drop height:

TP186 Figure 10.2.2. Oriented with the 880 axis 22.5° to the impact surface with the Rear Plate assembly down

Describe impact (location, rotation, etc.):

Impact was as planned, hitting directly on the lock cover with the 880 axis 22.5° to the impact surface.

Describe on-site inspection (damage, broken parts, etc.):

The pipeliner jacket exploded into 5-6 major pieces and numerous smaller pieces. The jacket mounting screws at the front plate end bent the 880 shell.
The Rear plate and lock assemblies received additional damage and the 880 shell was bent inward.

On-site test assessment:

- Was the test performed in aceordance with 10 CFR 71, IAEA TS-R-1 1996, and this test plan? **Yes or No.**
- Does the test specimen meet the requirements of 10 CFR 71 and IAEA TS-R-1 1996 for this test? **Yes or No.**
- Are any changes to subsequent drop orientations needed to achieve maximum damage? **Yes or No.**
  If yes, then identify and justify.

  The Puncture test will be performed without the jacket assembly and at ambient temperature.
- Did sufficient damage occur to warrant additional drop? **Yes or No.**
- Should testing continue with this test specimen? **Yes or No.** If yes, next test: TP186 1 meter puncture test
- Will the test specimen pass the thermal test based on the accumulated damage assessment? **Yes or No**

Engineering: 15 APR 2010 **Regulatory:** 28 Jun 10 **QA:** CMR 11 May 10

Describe any post-test disassembly and inspection:

No dis-assembly was done at this time as additional testing is required on this device

Describe any change in source position (if possible):

Source position is unchanged

Describe results of radiography (if performed):

Not performed

Completed by: Phil Rice	Date: 12 APR 2010

WORKSHEET 15.4 TEST INSPECTION DATA SHEET

Test Specimen Serial No.: Model 88095 S/N TP186A	Last Test Performed: 9M (30 foot) Free Drop Test (10 CFR 71.73(C)(1))
Describe and measure (if appropriate) any damage or broken parts, etc.: The lock cover, PN 88023-1 Rev E, was dented. This is an aluminum part intended to absorb impact and protect the source. The pipeliner jacket, PN PL1013, was destroyed.	
Describe and measure (if appropriate) any signs of permanent strain or deformation: See the attached photos	
Describe the condition of the simulated source wire assembly. The source wire was still locked in position and had not moved	
Reassemble the package using a representative active source, making sure that the source position and the package configuration is the same as they were immediately after the last test. Measure and record a radiation profile of each test specimen in accordance with QSA Global Work Instruction WI-Q-1806.	
Compare the pre-test dose levels with post-test dose levels at the surface of the package and at 1 meter from the surface of the package. This test will be performed after all testing is complete	
Is a radiograph required to inspect for hidden component damage or failure? If radiography is performed, describe any damage or failures found. This test will be performed after all testing is complete	
Completed by: Paul Rice	Date: 12 APR 2010

WORKSHEET 15.2 DROP & PUNCTURE TEST CHECKLIST

Test: 1 METER (40") PUNCTURE TEST (10 CFR 71.73(C)(3))		
Test Location: QSA Global, 40 North Ave Burlington, MA		
Step	**Data**	
1. Record test specimen serial number:	TP186B	
2. Record the test specimen weight:	46 lbs Without jacket	
3. Record the ambient temperature (°C):	40°F (4°C)	Instrument S/N: T198776
3. Record the test unit temperature (°C):	40°F (4°C) Ambient	Instrument S/N: T198776
4. Identify set-up orientation figure:	TP186 Figure 10.3.2	
5. Record drop height.	40 Inches (1 meter)	
6. Photograph set-up in at least two perpendicular planes. ✓		
7. Begin video recording of the test so that impact is recorded. ✓		
8. Release the test specimen. ✓		
9. Stop the video recorder. Ensure the point of impact and orientation specified in the plan has been achieved. ✓		
10. Record the damage to the test specimen. Use a separate sheet and attach, if needed. ✓		
11. Engineering, Regulatory Affairs and Quality Assurance make a preliminary assessment relative to 10 CFR 71. Record the assessment on a separate sheet and attach.		
Test witnessed by (Signature)	**Print Name**	**Date**
Engineering:	Paul Rice	12 APR 2010
Regulatory Affairs:	C. Pidcock	28 Apr 10
Quality Assurance: C. Roughan	C Roughan	11 Aug 10

WORKSHEET 15.3 DROP & PUNCTURE TEST DATA SHEET

Test Unit Model/Serial No.: Model 88095 S/N TP186B	Test: 1 Meter (40") Puncture Test (10 CFR 71.73(C)(3))
Test Date: 26 March 2010	Test Time: 12:15 PM

Describe drop orientation and drop height:

TP186 Figure 10.3.2. Oriented with the 880 axis 22.5° to the impact surface with the Rear Plate assembly down The lock assembly was centered over the post.

Describe impact (location, rotation, etc.):

Impact was as planned, hitting directly on the lock cover with the 880 axis vertical

Describe on-site inspection (damage, broken parts, etc.):

The lock cover assembly received additional denting damage but remained in place.
The 880 shell was bent in the areas around the front and rear plates

On-site test assessment:

- Was the test performed in accordance with 10 CFR 71, IAEA TS-R-1 1996, and this test plan? **Yes or No.**
- Does the test specimen meet the requirements of 10 CFR 71 and IAEA TS-R-1 1996 for this test? **Yes or No.**
- Are any changes to subsequent drop orientations needed to achieve maximum damage? **Yes or No**
  If yes, then identify and justify.
- Did sufficient damage occur to warrant additional drop? **Yes or No.**
- Should testing continue with this test specimen? **Yes or No.** If yes, next test: Profile
- Will the test specimen pass the thermal test based on the accumulated damage assessment? **Yes or No**

Engineering: 15 APR 2010 **Regulatory:** 28 Jun 2010 **QA:** CMR 11 Aug 10

Describe any post-test disassembly and inspection:

Describe any change in source position (if possible):

Source position is unchanged

Describe results of radiography (if performed):

Completed by: Dan Rice	Date: 12 APR 2010

WORKSHEET 15.4 TEST INSPECTION DATA SHEET

Test Specimen Serial No.: Model 88095 S/N TP186A	Last Test Performed: 1 Meter (40") Puncture Test (10 CFR 71.73(C)(3))
Describe and measure (if appropriate) any damage or broken parts, etc.: Damage was limited to worsening of the damage received in the previous tests. The lock cover, PN 88023-1 Rev E, was dented.	
Describe and measure (if appropriate) any signs of permanent strain or deformation: See the attached photos	
Describe the condition of the simulated source wire assembly. The source wire was still locked in position. It had not moved.	
Reassemble the package using a representative active source, making sure that the source position and the package configuration is the same as they were immediately after the last test. Measure and record a radiation profile of each test specimen in accordance with QSA Global Work Instruction WI-Q-1806.	
Compare the pre-test dose levels with post-test dose levels at the surface of the package and at 1 meter from the surface of the package.	
Is a radiograph required to inspect for hidden component damage or failure? If radiography is performed, describe any damage or failures found.	
Completed by: Paul Rice	Date: 12 APR 2010

WORKSHEET 15.2 DROP & PUNCTURE TEST CHECKLIST

Test: 1 METER (40") PUNCTURE TEST (10 CFR 71.73(C)(3))		
Test Location: QSA Global, 40 North Ave Burlington, MA		
Step	**Data**	
1. Record test specimen serial number:	TP186A	
2. Record the test specimen weight:	54 lbs	
3. Record the ambient temperature (°C):	40°F (4°C)	Instrument S/N: T198776
3. Record the test unit temperature (°C):	-45°F (-43°C)	Instrument S/N: T198776
4. Identify set-up orientation figure:	TP186 Figure 10.3.1	
5. Record drop height.	40 Inches (1 meter)	
6. Photograph set-up in at least two perpendicular planes. ✓		
7. Begin video recording of the test so that impact is recorded. ✓		
8. Release the test specimen. ✓		
9. Stop the video recorder. Ensure the point of impact and orientation specified in the plan has been achieved. ✓		
10. Record the damage to the test specimen. Use a separate sheet and attach, if needed. ✓		
11. Engineering, Regulatory Affairs and Quality Assurance make a preliminary assessment relative to 10 CFR 71. Record the assessment on a separate sheet and attach.		
Test witnessed by (Signature)	**Print Name**	**Date**
Engineering:	PAUL RICE	12 APR 2010
Regulatory Affairs:	L. P.	28 Jun 10
Quality Assurance: C. Roughan	C. Roughan	11 Aug 10

WORKSHEET 15.3 DROP & PUNCTURE TEST DATA SHEET

Test Unit Model/Serial No.: Model 88095 S/N TP186A	Test: 1 Meter (40") Puncture Test (10 CFR 71.73(C)(3))
Test Date: 26 March 2010	Test Time: 12:40 PM

Describe drop orientation and drop height:

TP186 Figure 10.2.1. Oriented with the 880 axis normal to the impact surface (vertical) with the Rear Plate assembly down. The lock assembly was centered over the post.

Describe impact (location, rotation, etc.):

Impact was as planned, hitting directly on the lock cover with the 880 axis vertical

Describe on-site inspection (damage, broken parts, etc.):

The impact caused additional cracking of the pipeliner jacket.
The lock cover assembly received additional denting damage but remained in place.
The rear plate casting was bent farther inward.

On-site test assessment:

- Was the test performed in accordance with 10 CFR 71, IAEA TS-R-1 1996, and this test plan? **Yes or No.**
- Does the test specimen meet the requirements of 10 CFR 71 and IAEA TS-R-1 1996 for this test? **Yes or No.**
- Are any changes to subsequent drop orientations needed to achieve maximum damage? **Yes or No.**
  If yes, then identify and justify.
- Did sufficient damage occur to warrant additional drop? **Yes or No.**
- Should testing continue with this test specimen? **Yes or No.** If yes, next test: Profile
- Will the test specimen pass the thermal test based on the accumulated damage assessment? **Yes or No**

Engineering: 15 APR 2010 **Regulatory:** 28 APR 10 **QA:** 11 May 10

Describe any post-test disassembly and inspection:

Describe any change in source position (if possible):

Source position has moved approximately an additional 1/16 inch

Describe results of radiography (if performed):

Completed by: Paul Rice	Date: 12 APR 2010

WORKSHEET 15.4 TEST INSPECTION DATA SHEET

Test Specimen Serial No.: Model 88095 S/N TP186A	Last Test Performed: 1 Meter (40") Puncture Test (10 CFR 71.73(C)(3))

Describe and measure (if appropriate) any damage or broken parts, etc.:

Damage was limited to worsening of the damage received in the previous tests.
The lock cover, PN 88023-1 Rev E, was dented and cracked. One pin, PN 88023-2, was broken.
The rear plate casting, PN88021, was bent inward causing the lock slide, PN88024, to be bent. The key lock, PN 66001-11, would not release. The selector ring, PN 88026, would not turn and the lock slide would not move.The pipeliner jacket, PN PL1013, was cracked in multiple places, but was largely intact.

Describe and measure (if appropriate) any signs of permanent strain or deformation:

See the attached photos

Describe the condition of the simulated source wire assembly.

The source wire was still locked in position. It had moved a total of approximately 3/16 inch due to the deformation of the rear plate.

Reassemble the package using a representative active source, making sure that the source position and the package configuration is the same as they were immediately after the last test.

Measure and record a radiation profile of each test specimen in accordance with QSA Global Work Instruction WI-Q-1806.

Compare the pre-test dose levels with post-test dose levels at the surface of the package and at 1 meter from the surface of the package.

Is a radiograph required to inspect for hidden component damage or failure? If radiography is performed, describe any damage or failures found.

Completed by: Paul Rice	Date: 12 APR 2010

WORKSHEET 15.2 DROP & PUNCTURE TEST CHECKLIST

Test: 9M (30 foot) FREE DROP TEST (10 CFR 71.73(C)(1))		
Test Location: QSA Global, 40 North Ave Burlington, MA		
Step	**Data**	
1. Record test specimen serial number:	TP186A	
2. Record the test specimen weight:	54 lbs	
3. Record the ambient temperature (°C):	57°F (14°C)	Instrument S/N: T198776
3. Record the test unit temperature (°C):	-39°F (-39°C)	Instrument S/N: T198776
4. Identify set-up orientation figure:	TP186 Figure 10.2.1	
5. Record drop height.	30 Feet (9.14 meters)	
6. Photograph set-up in at least two perpendicular planes. ✓		
7. Begin video recording of the test so that impact is recorded. ✓		
8. Release the test specimen. ✓		
9. Stop the video recorder. Ensure the point of impact and orientation specified in the plan has been achieved. ✓		
10. Record the damage to the test specimen. Use a separate sheet and attach, if needed. ✓		
11. Engineering, Regulatory Affairs and Quality Assurance make a preliminary assessment relative to 10 CFR 71. Record the assessment on a separate sheet and attach.		
Test witnessed by (Signature)	**Print Name**	**Date**
Engineering:	PAUL RICE	12 APR 2010
Regulatory Affairs:	C. P. [illegible]	28 Jun 10
Quality Assurance: C. Roughan	C. Roughan	11 Aug 2010

WORKSHEET 15.3 DROP & PUNCTURE TEST DATA SHEET

Test Unit Model/Serial No.: Model 88095 S/N TP186B	Test: 9M (30 foot) Free Drop Test (10 CFR 71.73(C)(1))
Test Date: 19 March 2010	Test Time: 9:30 AM

Describe drop orientation and drop height:

TP186 Figure 10.2.1. Oriented with the 880 axis normal to the impact surface (vertical) with the Rear Plate assembly down

Describe impact (location, rotation, etc.):

Impact was as planned, hitting directly on the lock cover with the 880 axis vertical

Describe on-site inspection (damage, broken parts, etc.):

The impact caused numerous cracks in the pipeliner jacket.
The lock cover assembly received additional damage including a broken pin, but remained in place.
The rear plate casting was bent inward.

On-site test assessment:

- Was the test performed in accordance with 10 CFR 71, IAEA TS-R-1 1996, and this test plan? **Yes or No**.
- Does the test specimen meet the requirements of 10 CFR 71 and IAEA TS-R-1 1996 for this test? **Yes or No**.
- Are any changes to subsequent drop orientations needed to achieve maximum damage? **Yes or No**
  If yes, then identify and justify.
- Did sufficient damage occur to warrant additional drop? **Yes or No**
- Should testing continue with this test specimen? **Yes or No**. If yes, next test: TP186 1 meter puncture test
- Will the test specimen pass the thermal test based on the accumulated damage assessment? **Yes or No**

Engineering: 16 APR 2010 **Regulatory:** 20 APR **QA:** 11 Apr 10

Describe any post-test disassembly and inspection:

No dis-assembly was done at this time as additional testing is required on this device

Describe any change in source position (if possible):

Source position has moved approximately 1/8 inch

Describe results of radiography (if performed):

Not performed

Completed by: PAUL RICE	Date: 12 APR 2010

WORKSHEET 15.4 TEST INSPECTION DATA SHEET

Test Specimen Serial No.: Model 88095 S/N TP186A	Last Test Performed: 9M (30 foot) Free Drop Test (10 CFR 71.73(C)(1))

Describe and measure (if appropriate) any damage or broken parts, etc.:

The lock cover, PN 88023-1 Rev E, was dented and cracked. One pin, PN 88023-2, was broken.
The rear plate casting, PN88021, was bent inward causing the lock slide, PN88024, to be bent. The key lock, PN 66001-11, would not release. The selector ring, PN 88026, would not turn and the lock slide would not move.
The pipeliner jacket, PN PL1013, was cracked in multiple places.

Describe and measure (if appropriate) any signs of permanent strain or deformation:

See the attached photos

Describe the condition of the simulated source wire assembly.

The source wire was still locked in position. It had moved approximately 1/8 inch due to the deformation of the rear plate.

Reassemble the package using a representative active source, making sure that the source position and the package configuration is the same as they were immediately after the last test.

Measure and record a radiation profile of each test specimen in accordance with QSA Global Work Instruction WI-Q-1806.

Compare the pre-test dose levels with post-test dose levels at the surface of the package and at 1 meter from the surface of the package.

This test will be performed after all testing is complete

Is a radiograph required to inspect for hidden component damage or failure? If radiography is performed, describe any damage or failures found.

This test will be performed after all testing is complete

Completed by: Paul Rice	Date: 12 APR 2010

WORKSHEET 15.2 DROP & PUNCTURE TEST CHECKLIST

Test: 1.2m (4-foot) Free Drop Test (10 CFR 71.71(c)(7))		
Test Location: QSA Global, 40 North Ave Burlington, MA		
Step	**Data**	
1. Record test specimen serial number:	TP186A	
2. Record the test specimen weight:	54 lbs	
3. Record the ambient temperature (°C):	65°F (18°C)	Instrument S/N: T198776
3. Record the test unit temperature (°C):	-45°F (-43°C)	Instrument S/N: T198776
4. Identify set-up orientation figure:	TP186 Figure 10.1.1	
5. Record drop height.	48 inches (1.22 meters)	
6. Photograph set-up in at least two perpendicular planes. ✓		
7. Begin video recording of the test so that impact is recorded. ✓		
8. Release the test specimen. ✓		
9. Stop the video recorder. Ensure the point of impact and orientation specified in the plan has been achieved. ✓		
10. Record the damage to the test specimen. Use a separate sheet and attach, if needed. ✓		
11. Engineering, Regulatory Affairs and Quality Assurance make a preliminary assessment relative to 10 CFR 71. Record the assessment on a separate sheet and attach.		
Test witnessed by (Signature)	**Print Name**	**Date**
Engineering:	PAUL RIEF	12 APR 2010
Regulatory Affairs:	L. Pi[illegible]	2[illegible] 10
Quality Assurance: C Roughan	C Roughan	11 Ap[illegible]

WORKSHEET 15.3 DROP & PUNCTURE TEST DATA SHEET

Test Unit Model/Serial No.: Model 88095 S/N TP186A	Test: 1.2m (4-foot) Free Drop Test (10 CFR 71.71(c)(7))
Test Date: 11 March 2010	Test Time: 1:30 PM

Describe drop orientation and drop height:

TP186 Figure 10.1.1. Oriented with the 880 axis normal to the impact surface (vertical) with the Rear Plate assembly down

Describe impact (location, rotation, etc.):

Impact was as planned, hitting directly on the lock cover with the 880 axis vertical

Describe on-site inspection (damage, broken parts, etc.):

The impact crushed and cracked the lock cover. It also broke the head off on of one lock cover mounting screw.

On-site test assessment:

- Was the test performed in accordance with 10 CFR 71, IAEA TS-R-1 1996, and this test plan? **Yes or No.**
- Does the test specimen meet the requirements of 10 CFR 71 and IAEA TS-R-1 1996 for this test? **Yes or No.**
- Are any changes to subsequent drop orientations needed to achieve maximum damage? **Yes or No.**
  If yes, then identify and justify.
- Did sufficient damage occur to warrant additional drop? **Yes or No.**
- Should testing continue with this test specimen? **Yes or No.** If yes, next test: TP186 30 foot drop
- Will the test specimen pass the thermal test based on the accumulated damage assessment? **Yes or No**

Engineering: 15 APR 2010 **Regulatory:** **QA:** 11 Aug 10

Describe any post-test disassembly and inspection:

No dis-assembly was done at this time as additional testing is required on this device

Describe any change in source position (if possible):

Source position is unchanged

Describe results of radiography (if performed):

Not performed

Completed by: Paul Rice	Date: 12 APR 2010

WORKSHEET 15.4 TEST INSPECTION DATA SHEET

Test Specimen Serial No.: Model 88095 S/N TP186A	Last Test Performed: 1.2m (4-foot) Free Drop Test (10 CFR 71.71(c)(7))
Describe and measure (if appropriate) any damage or broken parts, etc.: The lock cover, PN 88023-1 Rev E, was crushed and cracked. This is an aluminum part intended to absorb impact and protect the source. One screw, PN SCR159, connecting a cover pin PN 88023-2 to the cover broke. The cover remained attached to the Rear Plate assembly	
Describe and measure (if appropriate) any signs of permanent strain or deformation: See the attached photos	
Describe the condition of the simulated source wire assembly. The source wire was still locked in position and had not moved	
Reassemble the package using a representative active source, making sure that the source position and the package configuration is the same as they were immediately after the last test. Measure and record a radiation profile of each test specimen in accordance with QSA Global Work Instruction WJ-Q-1806. ✓	
Compare the pre-test dose levels with post-test dose levels at the surface of the package and at 1 meter from the surface of the package. This test will be performed after all testing is complete	
Is a radiograph required to inspect for hidden component damage or failure? If radiography is performed, describe any damage or failures found. This test will be performed after all testing is complete	
Completed by: Paul Rice	Date: 12 APR 2010

Section 8.2 Test Plan 186

QSA GLOBAL	Document Number **TP186**	Revision **0**

TEST PLAN 186

Model 880 Pipeliner
Type (B) Transport Package Test Results

10 CFR 71, Packaging and Transportation of Radioactive Materials
Subpart F – Package, Special Form, and LSA-III Tests
Sect 71.71 Normal Conditions of Transport
Sect 71.73 Hypothetical Accident Conditions

Originator	Paul Rice	Date: 15 DEC 09

APPROVALS		
Engineering		Date: 15 Dec 09
Regulatory		Date: 16 Dec 09
Quality Assurance		Date: 16 Dec 09

Contents Page

SECTION 1 ..... INTRODUCTION 3

SECTION 2 ..... TRANSPORT PACKAGE DESCRIPTION 4
- FIGURE 2.1 PIPELINER JACKET ASSEMBLY, IRSS PART NO PL1000H 6
- FIGURE 2.2 MODEL 880 PROJECTOR WITH PIPELINER JACKET, DN 88095 Rev A 7
- FIGURE 2.3 MODEL 880 PROJECTOR WITH PIPELINER JACKET - SECTION VIEWS 8

SECTION 3 ..... REGULATORY COMPLIANCE 9
- TABLE 3.1 MATERIAL MELTING POINTS 9

SECTION 4 ..... DISCUSSION ON SYSTEM FAILURE MODES OF INTEREST 11

SECTION 5 ..... ASSESSMENT OF PACKAGE CONFORMANCE 12

SECTION 6 ..... CONSTRUCTION AND CONDITION OF TEST SPECIMENS 13

SECTION 8 ..... TEST PROCEDURE 15

SECTION 9 ..... TEST SPECIMEN PREPARATION AND INSPECTION 16

SECTION 10 ..... SUMMARY OF TEST SCHEDULE 17
- FIGURE 10.1.1 NORMAL CONDITIONS - 1.2M DROP 1 17
- FIGURE 10.1.2 NORMAL CONDITIONS - 1.2M DROP 2 17
- FIGURE 10.2.1 ACCIDENT CONDITIONS - 9M DROP 1 18
- FIGURE 10.2.2 ACCIDENT CONDITIONS - 9M DROP 2 18
- FIGURE 10.3.1 ACCIDENT CONDITIONS - PUNCTURE 1 19
- FIGURE 10.3.2 ACCIDENT CONDITIONS - PUNCTURE 2 19

SECTION 11 ..... 1.2M (4-FOOT) FREE DROP TEST (10 CFR 71.71(C)(7)) 20
- FIGURE 11.1.1 SPECIMEN TP186(A) ORIENTATION FOR THE 1.2M DROP TEST 21
- FIGURE 11.1.2 SPECIMEN TP186(B) ORIENTATION FOR THE 1.2M DROP TEST 22

SECTION 12 ..... 9M FREE DROP TEST (10 CFR 71.73(C)(1)) 24
- FIGURE 12.2.1 SPECIMEN TP186(A) ORIENTATION FOR THE 9M DROP TEST 25
- FIGURE 12.2.2 SPECIMEN TP186(B) ORIENTATION FOR THE 9M DROP TEST 26

SECTION 13 ..... PUNCTURE TEST (10 CFR 71.73(C)(3)) 28
- FIGURE 13.3.1 SPECIMEN TP186(A) ORIENTATION FOR THE PUNCTURE TEST 29
- FIGURE 13.3.2 SPECIMEN TP186(B) ORIENTATION FOR THE PUNCTURE TEST 30

SECTION 15 ..... WORKSHEETS 33
- WORKSHEET 15.1 DROP & PUNCTURE TEST SPECIMEN & EQUIPMENT LIST 34
- WORKSHEET 15.2 DROP & PUNCTURE TEST CHECKLIST 35
- WORKSHEET 15.3 DROP & PUNCTURE TEST DATA SHEET 36
- WORKSHEET 15.4 TEST INSPECTION DATA SHEET 37

SECTION 16 ..... ATTACHMENTS 38
- ATTACHMENT 16.1 IRSS "WORK INSTRUCTIONS FOR PERFORMING PIPELINER RETROFIT" 38
- ATTACHMENT 16.3 IRSS PIPELINER OPERATIONS AND MAINTENANCE MANUAL, APR 4, 2007 43

Section 1 Introduction

This document describes the mechanical test plan for the Model 880 Pipeliner Projector to meet NRC requirements for Type B(U)-96 packages as described in the Code of Federal Regulations, 10 CFR Part 71 , revised as of January 1, 2009.

The test plan also covers the criteria stated in the International Atomic Energy Agency (IAEA), Safety Standards Series No. TS-R-1, Regulations for the Safe Transport of Radioactive Material, 1996 Edition, Section VI.

This document describes the test package specifications, testing equipment, testing scenario, justifies the package orientations for the different test specimens and provides test worksheets to record key steps in the testing sequence.

This series of tests is intended to evaluate any impact the Pipeliner Jacket assembly may have on the Model 880 Projector.

Section 2 Transport Package Description

Description of the Model 880 Projector Assembly

The radioactive material is sealed in a special form source capsule. The source capsule, stop and connector are swaged to a flexible steel wire to form the source wire assembly. The source wire assembly is held securely to the device by components of the rear plate assembly. One of these components, the sleeve, in conjunction with the selector ring retainer, prevents the stop ball of the source wire from being pulled through the rear of the package. Another component, the lock slide, prevents the stop ball from being pushed out of the front when in the secured position. A cover over the source wire connector prevents access to the source assembly until a keyed lock is actuated and the cover removed. This cover is in place during transport of the package.

The selector ring retainer is fastened to the rear plate with four, #10 stainless steel machine screws. The rear plate is attached to rivnuts assembled on the endplate weldment with four 5/16-18 stainless steel security screws. The endplate weldment consists of the endplate disc, a U-shaped bracket and the four rivnuts. The U-brackets are welded to the endplate disc and the endplate disc is welded to the cylindrical shell.

The shield is fastened within the device at each end by a titanium shield pin. The pin passes through the shield and the U-bracket. The shield is centered in the shell and has the source tube cast into its center. The source tube provides a cavity for the source wire assembly to travel through during use. The source capsule is positioned at the center of the ball of the shield within the source tube cavity when the source wire is in its secured position.

The model 880 uses polyurethane foam to fill the cavity around the depleted uranium shield. The foam prevents contamination to and from the depleted uranium shield.

Previous thermal tests have shown charred polyurethane foam will inhibit the flow of oxygen to the shield and prevent oxidation from occurring during a fire as long as the foam remains confined. This is shown on AEA Technology QSA Test plan number 70.

It has also been shown the charred foam will not support the shield at temperatures of 800°C. The model 880 relies on the shield pins to hold the shield in place at all times. These pins are designed to retain the shield throughout testing without the added support of the foam.

The outlet port, located at the front end, serves to block access into or out of the source tube cavity. Four stainless steel security screws fix the front plate to the endplate rivnuts.

Testing of the Model 880 Projector was performed under the following Test Plan:

- AEA Technology QSA Test Report 108 August 2000

Description of the Pipeliner Jacket Assembly

The Pipeliner Jacket Assembly, Part No PL1000H, consists of:

- The Pipeliner Jacket, Part No PL1013, constructed of cast Polyurethane
  - Pipeliner Axle Nut, Part No PL1025, constructed of Stainless Steel
- The Pipeliner Wheel Assembly, Assembly No PL1010, constructed of cast Polyurethane and:
  - Pipeliner Wheel Hub, Part No PL1023, constructed of 6061-T6 Aluminum
  - Pipeliner Wheel Bushing, Part No PL1024, constructed of Sintered Bronze
- The Pipeliner Wheel Axle Bolt, Part No PL1002, constructed of 303 Stainless Steel
- The Pipeliner Mounting Screws, Part No PL1030, constructed of Stainless Steel

The Pipeliner Jacket Assembly is secured to the Model 880 Projector by six #14 x ¾ Tamperproof screws (IRSS PN PL1030) inserted through existing holes in the Projector shell.

Figure 2.1 shows the Pipeliner Jacket Assembly.

Figure 2.2 shows the transport package with the Pipeliner plastic jacket assembly installed.

Figure 2.3 shows section views of the transport package with the Pipeliner plastic jacket assembly installed.

Since the jacket will be on the package during transport and its weight will add approximately 8 lbs, this series of tests will be performed with the jacket assembly installed.

In a drop, the plastic jacket may add additional protection for the transport package from further damage by absorbing energy upon impact.

The 4 foot, 30 foot and puncture orientations for these tests will be based on damage observed from orientations previously tested as part of AEA Technology QSA Test Plan 108 and speculative damaging effects the jacket may have on the safety aspects of the package.

The weight of the Model 880 transport package without a jacket installed is not greater than 46 pounds.
The total weight of the package with the Pipeliner jacket installed is not greater than 55 pounds.

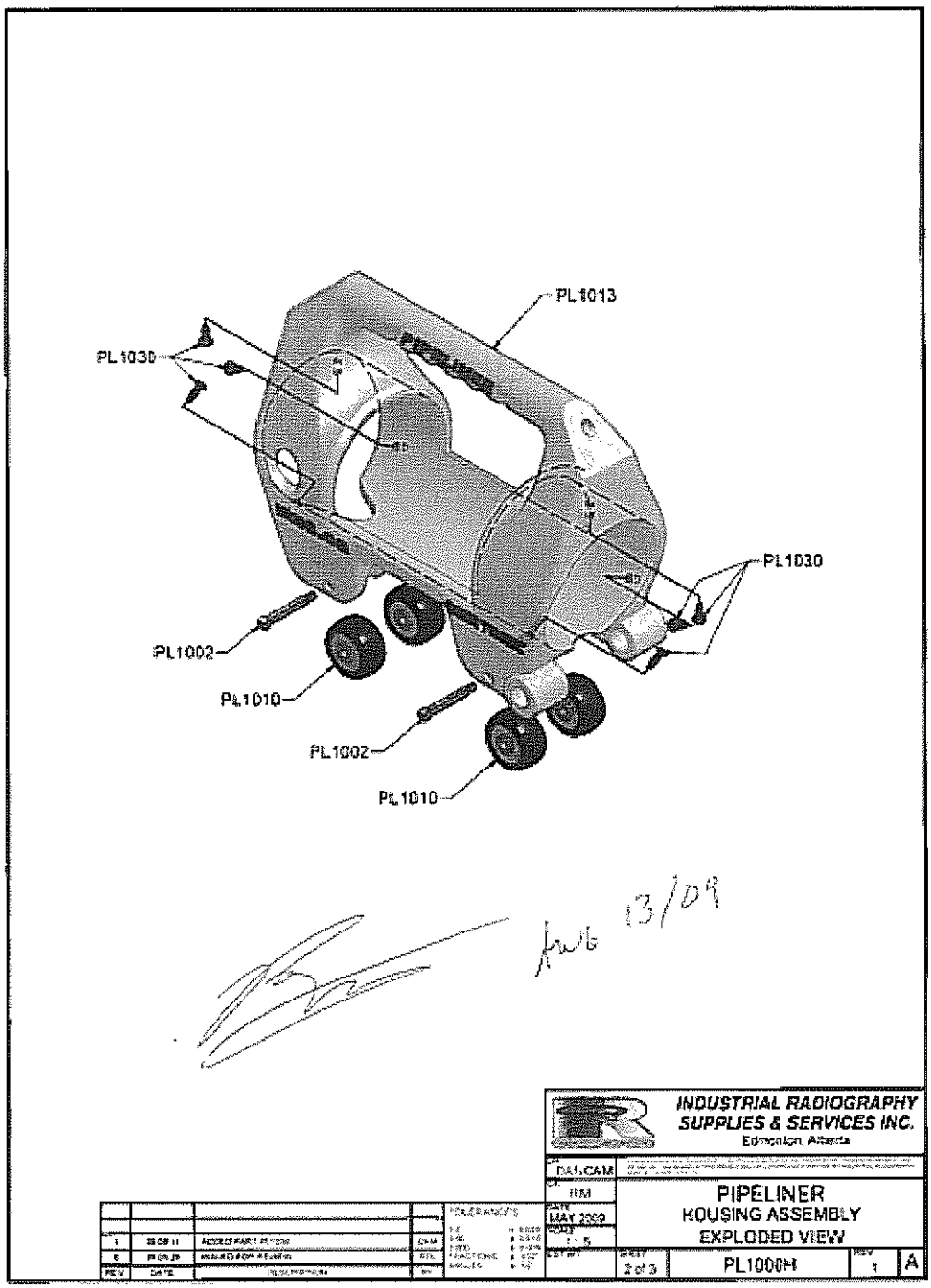

PART NO	REV	TITLE
PL1000H	1	Housing Assembly Exploded View
PL1002	3	Wheel Axle Bolt
PL1010	0	Wheel Assembly
PL1023	0	Wheel Hub Machining Details
PL1024	0	Wheel Hub Bushing Machining Details
PL1013	0	Jacket Casting Details & General Dimensions
PL1025	0	Axle Nut Machining Details
PL1030	0	Mounting Screws

FIGURE 2.1 PIPELINER JACKET ASSEMBLY, IRSS PART NO PL1000H

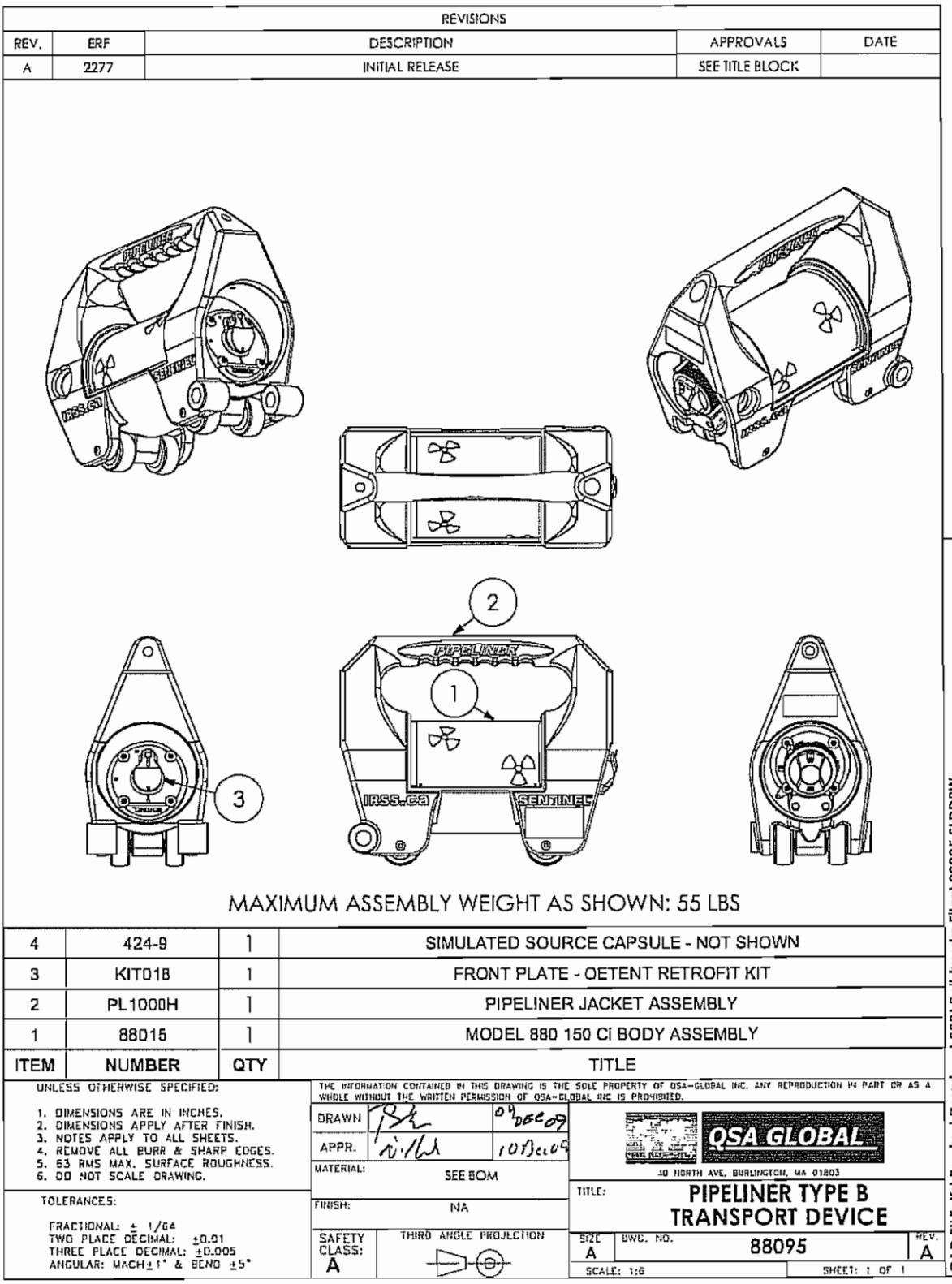

FIGURE 2.2 MODEL 880 PROJECTOR WITH PIPELINER JACKET, DN 88095 Rev A

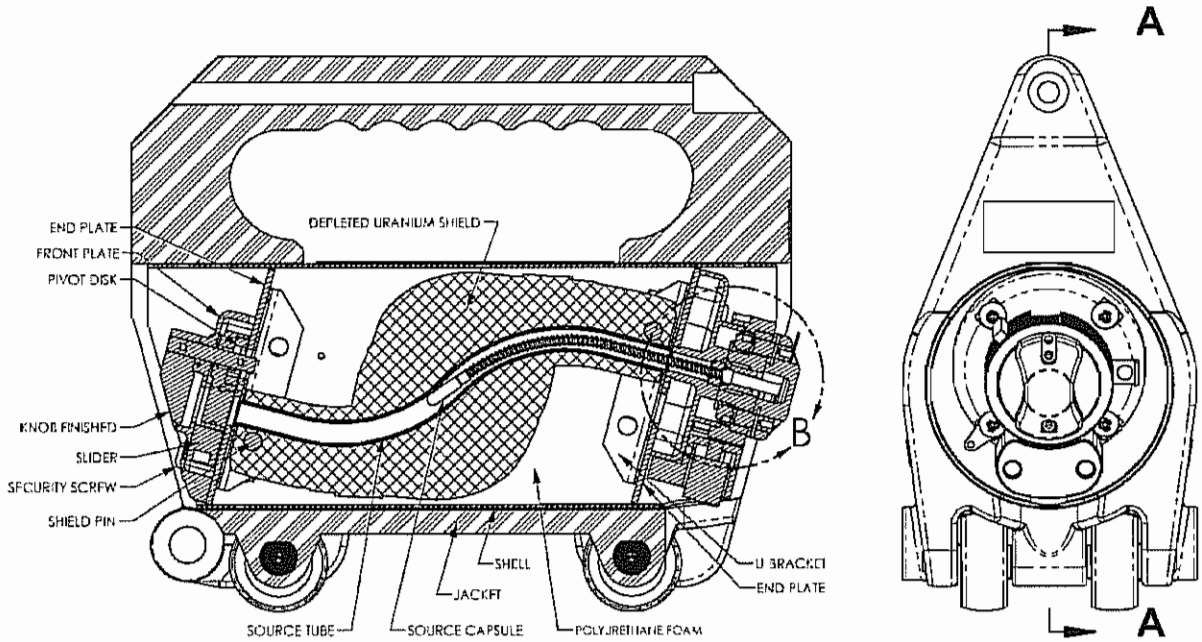

SECTION A-A

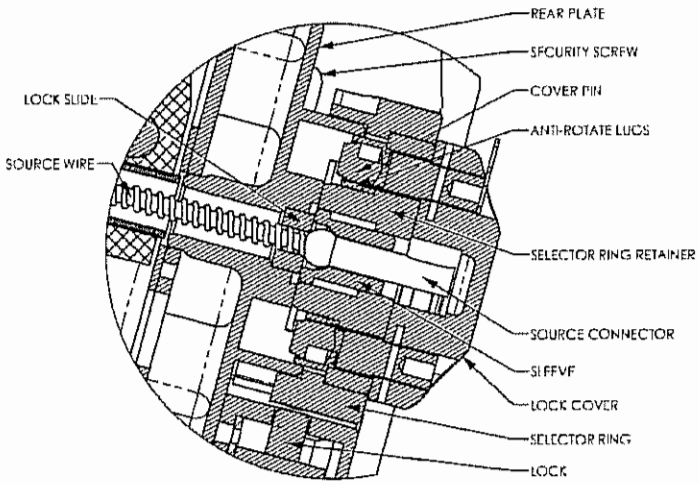

DETAIL B

FIGURE 2.3 MODEL 880 PROJECTOR WITH PIPELINER JACKET - SECTION VIEWS

The purpose of this plan, which was developed in accordance with QSA WI-E-1808, is to demonstrate that the Model 880 Pipeliner projector complies with the Type B(U)-96 transport package test requirements as described in the Code of Federal Regulations, 10 CFR Part 71 , revised as of January 1, 2009 and the International Atomic Energy Agency (IAEA), Safety Standards Series No. TS-R-1, Regulations for the Safe Transport of Radioactive Material, 1996 Edition, Section VI.

The Model 880 Projector assembly was previously tested and approved for use as a transport package without the addition of a jacket as well as with the standard Sentinel jacket. This series of tests will evaluate the effect of adding the Pipeliner jacket to the Model 880 Projector.

The water spray preconditioning of the package will not be performed as the Model 880 Projector and the Pipeliner Jacket assemblies are constructed of waterproof materials throughout. The water spray would not contribute to any degradation in structural integrity.

The Normal Condition of Transport test to be performed is the 1.2m (Four-foot) free drop test (10 CFR 71.71 (c) (7)). (IAEA, TS-R-1, Para 722 (a)

The Hypothetical Accident Tests (10 CFR 71.73) to be performed are the 9m (30 foot) free drop test and the puncture test. (IAEA, TS-R-1, Para. 727(a) and 727(b))

The Stacking (Compression) Test TS-R-1 para 723 and 10CFR 71.71(c)(9) will not be performed as the Model 880 Projector was previously tested and the Pipeliner Jacket assembly should not adversely affect the results of this test.

The Penetration Test TS-R-1 para 724 and 10CFR 71.71(c)(10) will not be performed as the Model 880 Projector was previously tested and the Pipeliner Jacket assembly should not adversely affect the results of this test.

The Crush Test (10 CFR 71.73(c)(2)) will not be performed because the radioactive contents are qualified as Special-Form radioactive material.

The Thermal Test of (10 CFR 71.73(c)(4)) will not be performed as the Model 880 Projector has previously been evaluated for this requirement and the materials used in the Pipeliner Jacket have no different effect than the original Sentinel jacket. If damage to the 880 itself should occur during testing and there is an opening in the stainless steel shell that could expose the DU shield the waiver of thermal testing will be re-evaluated.

The melting points for the materials of the package are listed below:

TABLE 3.1 MATERIAL MELTING POINTS

Material	Melting Point
Stainless steel	1390°C (2530°F)
Depleted uranium	1135°C (2075°F)
Titanium	1700°C (3100°F)
Tungsten	3410°C (6170°F)
Copper/Brass	1080°C (1980°F)
Aluminum	580°C (1080°F)
Rubber/Plastic	Less than 540°C (1000°F)

The immersion test will not be performed. Only the source capsule (containment vessel) is sealed. . The source capsule is designed and tested to withstand external pressures well in excess of 22 lbf/in^2. All other assemblies are designed to allow equalization of internal and external pressure

Section 4 Discussion on System Failure Modes of Interest

General

The tests in this plan focus on damaging those components of the package which could cause displacement of the source from its stored position within the depleted uranium shield and which affect the integrity of the shield itself.

Normal and Accident Conditions of Transport

The modes of failure under normal and accident conditions that could lead to elevated dose rates include the following:

- Fracture or penetration of the projector weldment.
- Displacement of the shield within the projector weldment and distortion or fracture of the source.
- Failure of the source lock assembly and/or lock mounting screws.

The test conditions specified in this Test Plan are intended to challenge the ability of the Model 880 Pipeliner package with respect to these failure modes.

Orientations to be Tested

Based on previous testing of the 880 camera the area most subject to damage is the Rear Plate Assembly PN 88020. Damage to the Rear Plate Assembly could cause the source to become displaced or loose. Although this area passed all previous testing the Pipeliner jacket is oriented differently than the standard 880 jacket and may not offer the same protection to this assembly. This could affect the results.

Other orientations:

- Bottom Surface Impact; if an impact to the bottom surface caused the jacket to split the wheels would spread out around the body rather than impacting the shell. If the jacket did not split the jacket should absorb the impact of the wheels. In either case there is little likely hood that the shell would be significantly damaged.
- Top & Side Impacts; Impacts to the top or side surfaces might cause the plastic jacket to split, but it is highly unlikely that this would significantly damage the metal shell.

Based on the above, two orientations will be tested, both impacting the Rear Plate Assembly:

- The first orientation will be with the longitudinal axis of the camera vertical
- The second orientation will be with the Rear Plate Assembly parallel to the impact surface

Section 5 Assessment of Package Conformance

Regulatory Requirements

- **Normal Conditions of Transport (10 CFR 71.43(f))**

  There should be no loss or dispersal of radioactive contents, no significant increase in external surface radiation levels and no substantial reduction in the effectiveness of the packaging.

  IAEA Safety Standards Series No. TS-R-1, Para 622 (b) stipulates that the loss of shielding integrity should not result in more than a 20% increase in the radiation level at any external surface of the package.

- **Hypothetical Accident Conditions (10 CFR 71.51(a))**

  There should be no escape of radioactive materials greater than A_2 in one week and no external dose rate greater than 1 R/hr at 1m from the external surface with the maximum radioactive contents which the package is designed to carry.

Test Package Contents

The Model 880 Pipeliner projector is designed to carry a special form source. Containment of the radioactive source is tested at manufacture. The source capsule design has been certified in accordance with the performance requirements for special form as specified in 10 CFR Part 71 and IAEA Safety Standards Series No. TS-R-1.

A simulated source assembly, model 424-9, will be used during testing of the package. The radiation levels after testing will be measured by replacing the simulated source with an active source

Section 6 Construction and Condition of Test Specimens

The Model 880 transport package test specimens will be manufactured in accordance with the QSA Global, Inc. (QSA) Quality Assurance Program. The weight of each test specimen per this drawing is not greater than 46 pounds.

The Pipeliner jacket assemblies will be manufactured and supplied by IRSS in accordance with the Industrial Radiography Supplies and Services Inc. (IRSS) Quality Assurance Program, as an approved supplier to QSA. IRSS Certificates of Compliance for the supplied parts and assemblies will be included as part of the final test report.

Assembly of the Pipeliner test specimens used for these tests will be done by QSA staff qualified to perform maintenance on 880 projectors in accordance with Industrial Radiography Supplies and Services Inc. (IRSS) instructions for conversion of a standard Model 880 projector titled "Work instruction for performing Pipeliner Retro Fit" Rev 1.
Inspection of the finished assemblies will be performed by the QSA QC department in accordance with the requirements of Industrial Radiography Supplies and Services Inc. (IRSS) instructions for conversion of a standard Model 880 projector titled "Work instruction for performing Pipeliner Retro Fit" Rev 1.
This represents the process QSA and IRSS intend to use for the manufacture of production units.
Additionally, the test specimens will be inspected in accordance with IIR 88095 Rev

The IRSS assembly instructions include the installation of the Collimator and Shoe assemblies as required for use. These components are not part of the transport container assembly and are not included in this test plan. After the assembly and inspection of each test unit is completed the test units will be reconfigured to the transport condition as specified in IRSS Pipeliner Operations and Maintenance Manual. This involves the removal of the Pipeliner Shoe and Collimator assemblies. A copy of this manual will be included as part of the final test report.

The weight of each test specimen with the Pipeliner jacket is not greater than 55 pounds

The structural materials of the Model 880 are made of AISI Type 300 series stainless steel and titanium.
The shielding materials are depleted uranium and tungsten.
The non-safety related parts are made from aluminum, brass, copper, plastic, and rubber.

The Pipeliner jacket assembly is constructed of cast polyurethane, aluminum, bronze & Type 303 stainless steel.

All tests of this plan will subject the test specimen to an impact from a drop. The mechanical strength and ductility of the critical components of the package must continue to perform as expected at the ambient temperature conditions of –40°F to 100°F.

The fracture toughness, strength and ductility, of the structural materials in the Model 880 Projector do not change significantly at or between the temperatures of –40°F to 100°F. The shielding materials are relatively brittle throughout this entire temperature range.

The Pipeliner jacket material has a rated operating temperature range of approximately –30°F to 200°F. Because this does not meet the minimum -40°F temperature requirement of "10 CFR 71, Sect 71.73 Hypothetical Accident Conditions" this series of tests will be performed with the test units cooled to -40°F.

The primary containment is the source capsule, a special form sealed capsule welded at atmospheric pressure and pressure tested to 290 psi minimum. Except for this capsule the package is open to the atmosphere. The internal operating pressure of the containment system is considered to be in equilibrium with the outside pressure of the package. Therefore, the initial pressure of the Pipeliner system has no effect on these tests.

The equipment list worksheets in Section 15 identify the equipment required, with additional space to list other necessary equipment and measuring instruments needed to perform the tests. Additional materials and equipment used to facilitate the tests will be listed as needed.

Section 8 Test Procedure

General

All test specimens are to be tested in the sequence presented below. Each test has been designed to check the integrity of various components of the package. An assessment of transport integrity of the package will be made based on the cumulative effect of the tests performed on the package

The test specimens will have an orientation selected to produce the most damage to the package based on the results of Test Plan 108. The justification and description for this orientation shall be documented.

The tests have the following sequence:

1. Test specimen preparation and inspection
2. 1.2m (Four-foot) free drop test (10 CFR 71.71 (c) (7))
3. 9m (30-foot) free drop test (10 CFR 71.73 (c) (1))
4. Puncture test (10 CFR 71.73 (c) (3))
5. Final test inspection and/or assessment.
    a. The Pipeliner jacket assembly is to be removed prior to profiling.
    b. Repeat the profiling procedure used to inspect QSA PN 88015 prior to testing
6. Test specimen storage.

Roles and Responsibilities

The responsibilities of the groups identified in this plan are:

- **Engineering** executes the tests according to the test plan and summarizes the test results. Engineering also provides technical input to assist Regulatory Affairs and Quality Assurance as needed.
- **Regulatory Affairs** monitors the tests and reviews test reports for compliance with regulatory requirements.
- **Quality Assurance** oversees test execution and test report generation to assure compliance with the QSA Global Quality Assurance Program.
- **Engineering, Regulatory Affairs** and **Quality Assurance** are jointly responsible for assessing test and specimen conditions relative to 10 CFR 71 and IAEA TS-R-1..
- **Quality Control** is responsible for ensuring test and specimen data is measured and recorded throughout the test cycle.

Section 9 Test Specimen Preparation and Inspection

1. Manufacture three Model 880 projectors per QSA Global drawing number B88015, revision C. The projector is profiled per WI-Q1816 as part of this procedure.

2. Mount the three projectors in the Pipeliner jacket assemblies, IRSS part number PL1000H revision 1 , per IRSS instructions for conversion of a standard Model 880 projector titled "Work instruction for performing Pipeliner Retro Fit" Rev 1.

3. Clearly and indelibly mark each specimen: "TP186(X)". Where X is an alphabetically incremented letter beginning with "A". One of the three projectors will be used as a spare and used to replace a specimen dropped onto the wrong impact point, if necessary. The spare, if used, will follow the same test sequence as the initially selected specimen.

4. Measure and record the weight of each specimen.
   This weight must not exceed the maximum specified 55 lbs

5. Inspect the test specimens to ensure that:

   a. All fabrication and inspection records are documented in accordance with the QSA Global Quality Assurance Program.

   b. The test specimens comply with the requirements of the drawings and the IRSS assembly instructions.

Section 10 Summary of Test Schedule

Normal Conditions Test	Para.	Specimen	Diagram
1.2m Drop 1.	71.71(c)(7)	TP186(A)	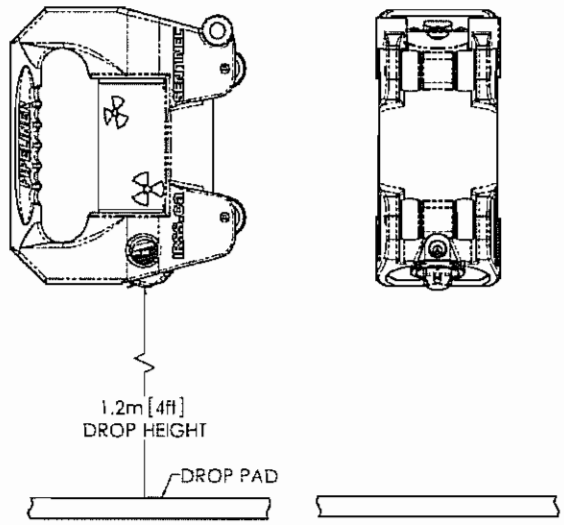
FIGURE 10.1.1 NORMAL CONDITIONS - 1.2M DROP 1			
1.2m Drop 2.	71.71(c)(7)	TP186(B)	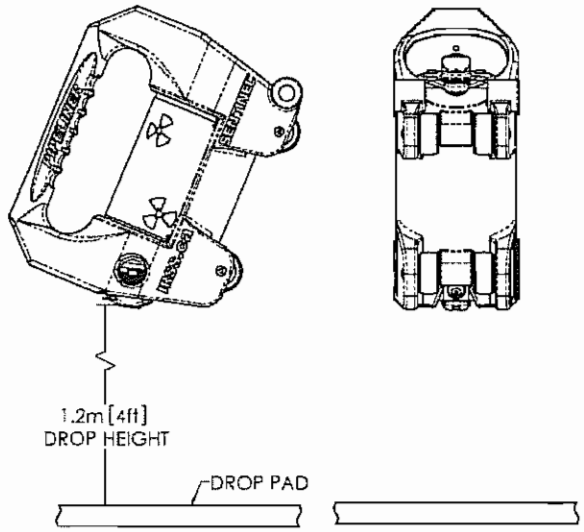
FIGURE 10.1.2 NORMAL CONDITIONS - 1.2M DROP 2			

Accident Conditions Test	Para.	Specimen	Diagram
9m Drop 1.	71.73(c)(1)	TP186(A)	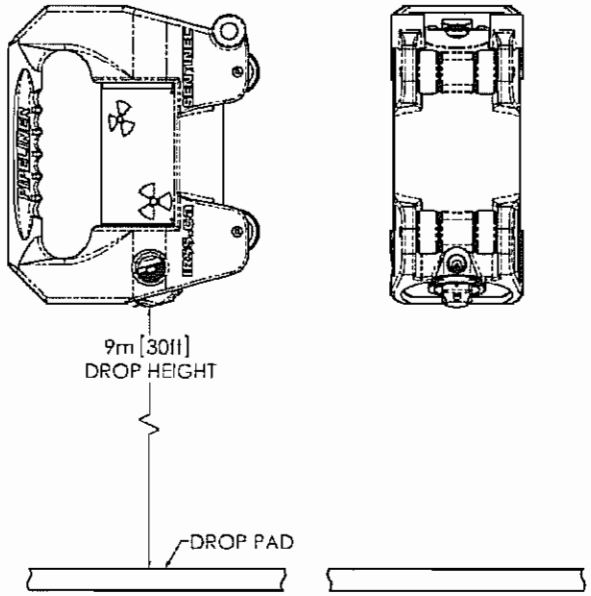

FIGURE 10.2.1 ACCIDENT CONDITIONS - 9M DROP 1

9m Drop 2.	71.73(c)(1)	TP186(B)	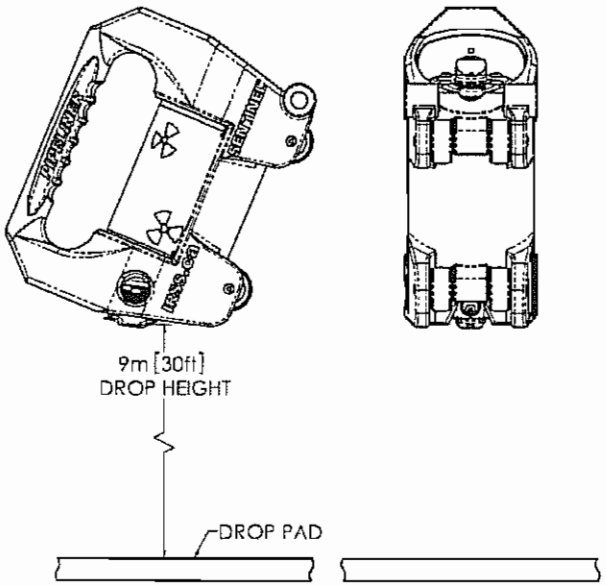

FIGURE 10.2.2 ACCIDENT CONDITIONS - 9M DROP 2

Accident Conditions Test	Para.	Specimen	Diagram
Puncture 1.	71.73(c)(3)	TP186(A)	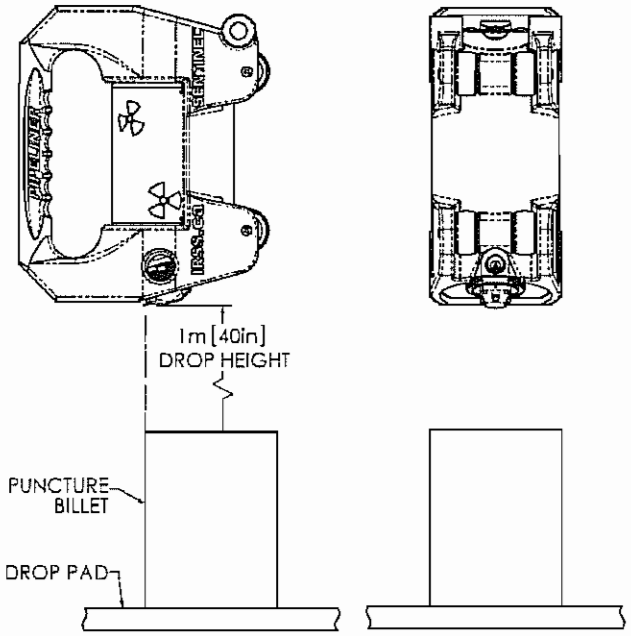
FIGURE 10.3.1 ACCIDENT CONDITIONS - PUNCTURE 1			
Puncture 2.	71.73(c)(3)	TP186(B)	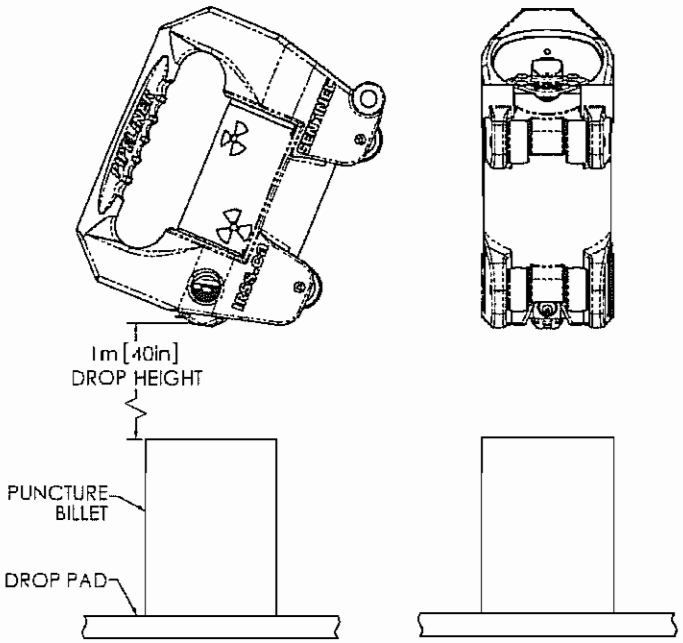
FIGURE 10.3.2 ACCIDENT CONDITIONS - PUNCTURE 2			

Section 11 1.2m (4-foot) Free Drop Test (10 CFR 71.71(c)(7))

The Normal Transport Conditions Test is the 1.2m (4-foot) free drop test as described in 10 CFR 71.71(c)(7).

The figures of this section illustrate the orientations for the test specimens.

- **1.2m Free Drop Test Set-up**

To set up a package for the 1.2m (4-foot) drop test:

1. Measure and record the weight of the test specimen.
2. Cool the test specimen to -40°F
3. Measure and record the test specimen and ambient temperatures.
4. Position the 1st specimen on the drop surface and position it according to the orientation shown in Figure 11.1.1
5. Raise the package so that the impact target is 1.2m (4 feet) above the drop surface. Ensure the center of gravity is over the impact point
6. Measure and record the ambient temperature.
7. Photograph the set-up.
8. Start the video recorder.
9. Drop the package.
10. Stop the video recorder.
11. Record the damage to the package and take a photographic record.
12. Repeat steps 3 - 10 with the 2nd specimen positioned as shown in Figure 11.1.2

Specimen TP186(A) Orientation for the 1.2m Drop Test

Figure 11.1.1 shows the package orientation for Specimen TP186(A).

The specimen will be dropped with its axis normal to the drop surface with the lock assembly facing down.

The object of the drop is to use the lock cover as leverage to drive the rear plate across the endplate to shear the rear plate mounting screws.

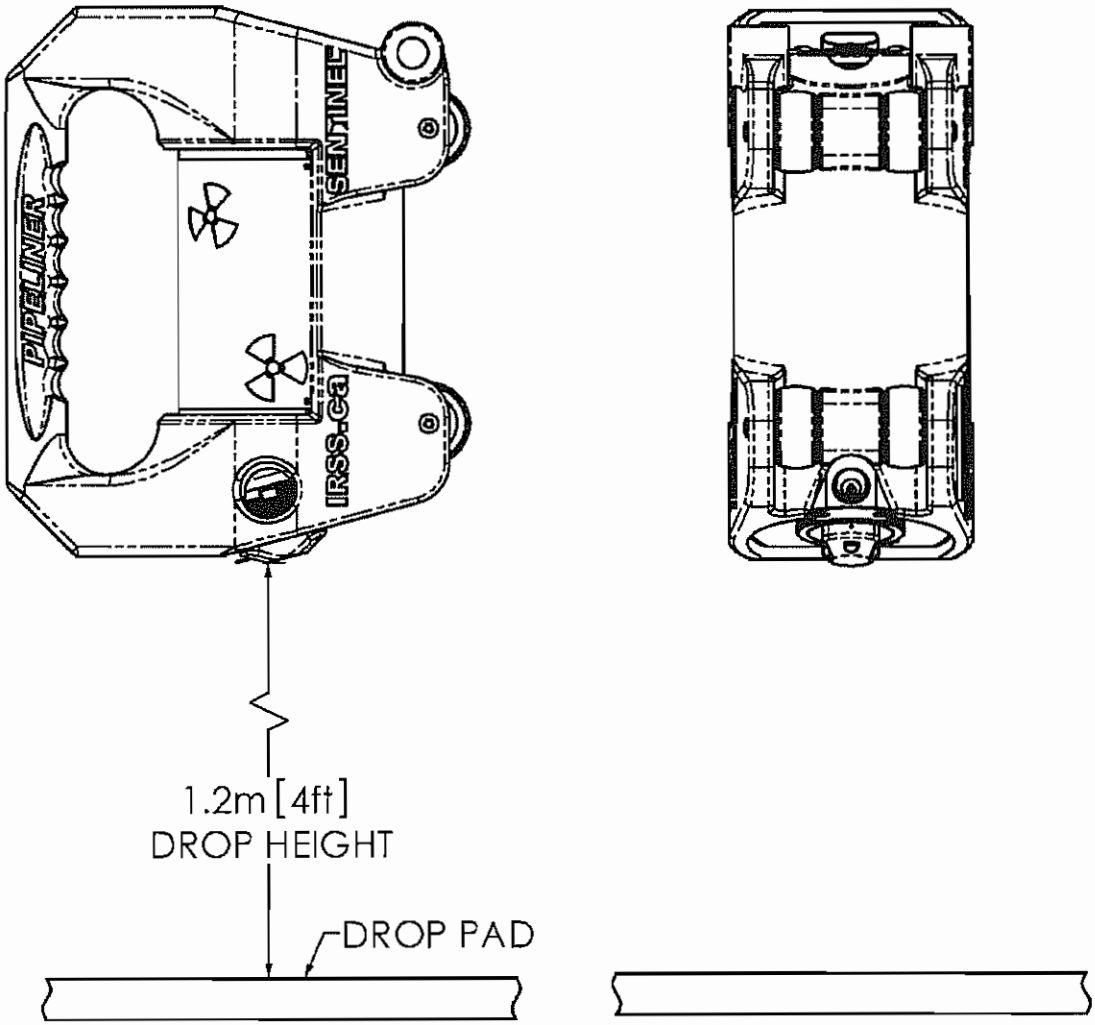

FIGURE 11.1.1 SPECIMEN TP186(A) ORIENTATION FOR THE 1.2M DROP TEST

Specimen TP186(B) Orientation for the 1.2m Drop Test

Figure 11.1.2 shows the package orientation for Specimen TP186(B).

The specimen will be dropped with its axis at approximately 22.5 degrees to the drop surface with the lock assembly facing down.

The object of this drop is to test the integrity of the end plate and to determine the effect of the drop on the depleted uranium shield.

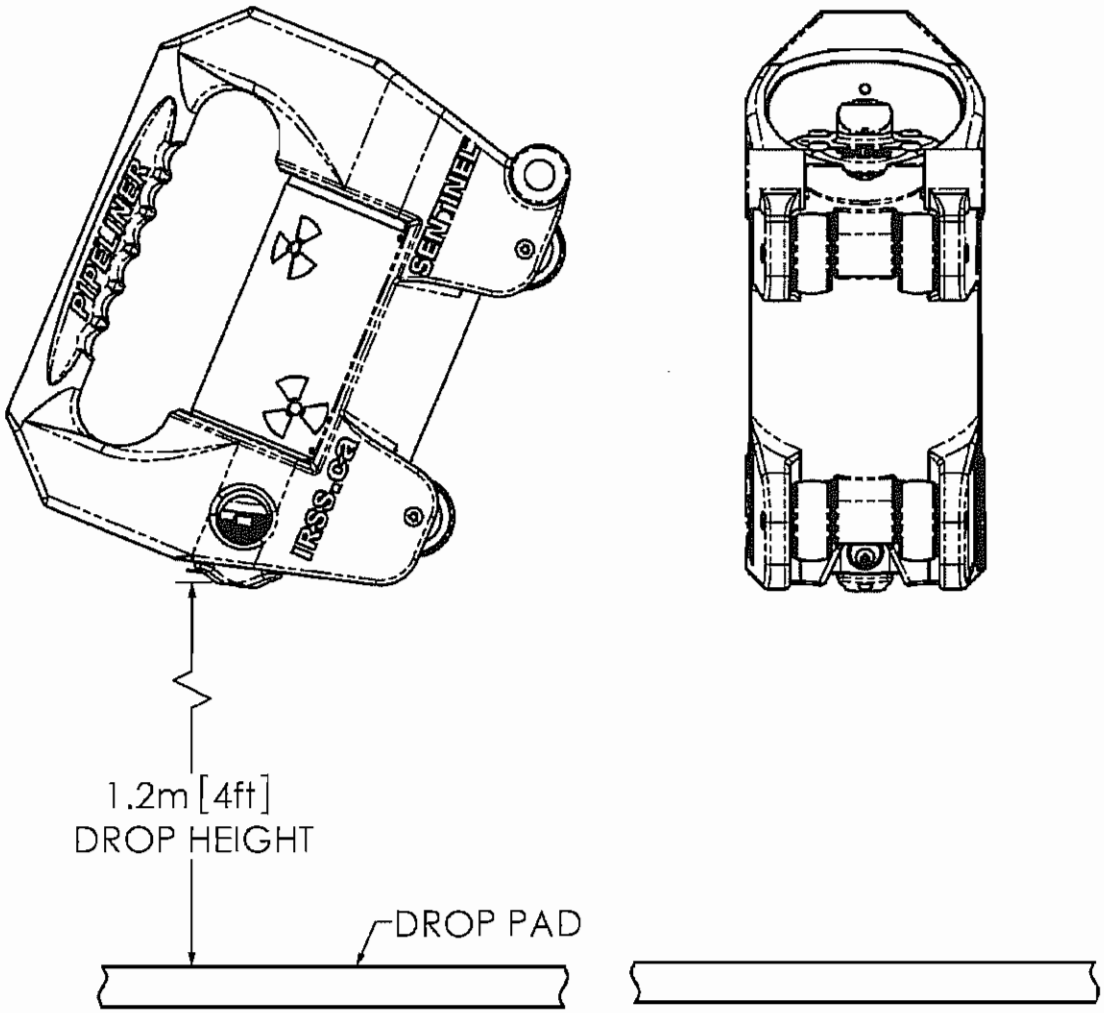

FIGURE 11.1.2 SPECIMEN TP186(B) ORIENTATION FOR THE 1.2M DROP TEST

1.2m Free Drop Test Assessment

Upon completion of each test, **Engineering**, **Regulatory Affairs** and **Quality Assurance** team members will jointly take the following actions:

1. Review the test execution to ensure that each test was performed in accordance with this test plan.

2. Make a preliminary evaluation of the specimens relative to the requirements of 10 CFR 71 and IAEA Safety Standards Series No. TS-R-1.

3. Assess the damage to each specimen to decide whether testing of that specimen is to continue.

4. Evaluate the condition of each specimen to determine what changes, if any, are necessary in package orientation in the 30-foot drop test to achieve maximum damage.

Section 12 9m Free Drop Test (10 CFR 71.73(c)(1))

The first Hypothetical Accident Test is the 9m (30-foot) free drop test as described in 10 CFR 71.73(c)(1).

The figures of this section illustrate the orientations for the test specimen.

- **<u>9m Free Drop Test Set-up</u>**

To set up a package for the 9m (30-foot) drop test:

1. Measure and record the weight of the test specimen.
2. Cool the test specimen to -40°F
3. Measure and record the test specimen and ambient temperatures.
4. Position the 1st specimen on the drop surface and position it according to the orientation shown in Figure 12.2.1
5. Raise the package so that the impact target is 9m (30 feet) above the drop surface. Ensure the center of gravity is over the impact point
6. Measure and record the ambient temperature.
7. Photograph the set-up.
8. Start the video recorder.
9. Drop the package.
10. Stop the video recorder.
11. Record the damage to the package and take a photographic record.
12. Repeat steps 3 - 10 with the 2nd specimen positioned as shown in Figure 12.2.2

Specimen TP186(A) Orientation for the 9m Drop Test

Figure 12.2.1 shows the package orientation for Specimen TP186(A).

The specimen will be dropped with its axis normal to the drop surface with the lock assembly facing down.

The object of the drop is to use the lock cover as leverage to drive the rear plate across the endplate to shear the rear plate mounting screws.

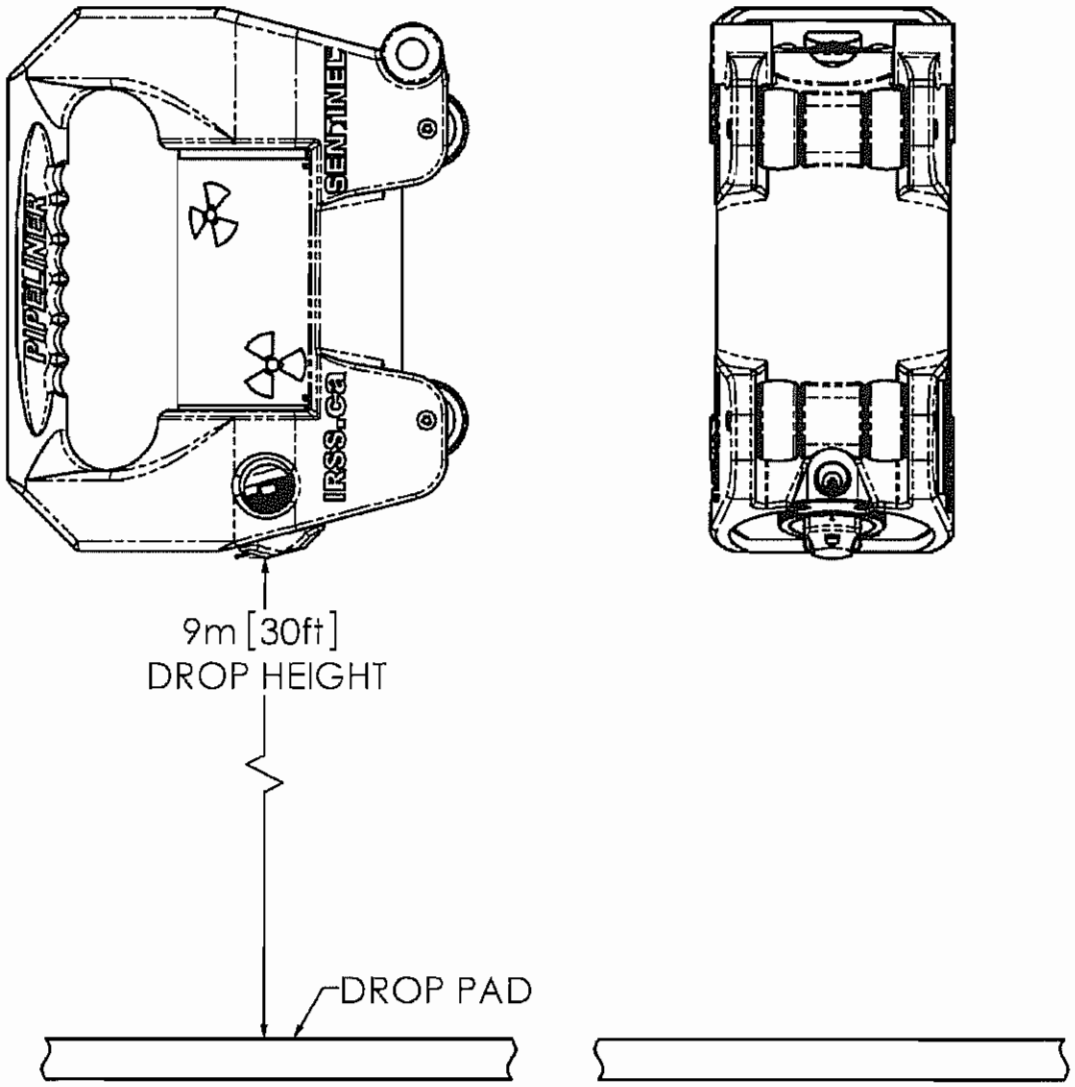

FIGURE 12.2.1 SPECIMEN TP186(A) ORIENTATION FOR THE 9M DROP TEST

Specimen TP186(B) Orientation for the 9m Drop Test

Figure 12.2.2 shows the package orientation for Specimen TP186(B).

The specimen will be dropped with its axis at approximately 22.5 degrees to the drop surface with the lock assembly facing down.

The object of this drop is to test the integrity of the end plate and to determine the effect of the drop on the depleted uranium shield.

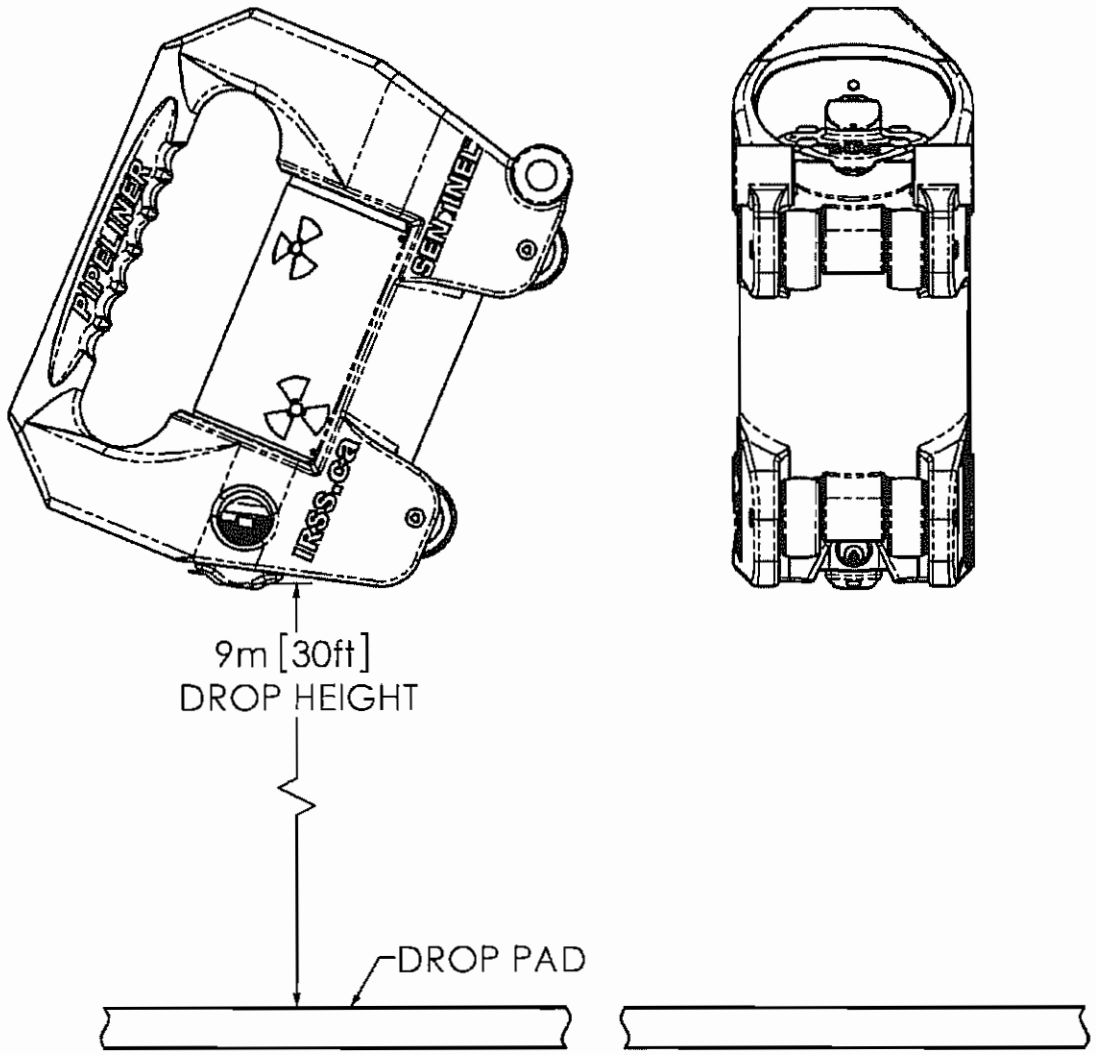

FIGURE 12.2.2 SPECIMEN TP186(B) ORIENTATION FOR THE 9M DROP TEST

9m Free Drop Test Assessment

Upon completion of each test, **Engineering**, **Regulatory Affairs** and **Quality Assurance** team members will jointly take the following actions:

Review the test execution to ensure that each test was performed in accordance with 10 CFR 71, IAEA Safety Standards Series No. TS-R-1, and this test plan.

Make a preliminary evaluation of the specimens relative to the requirements of 10 CFR 71 and IAEA Safety Standards Series No. TS-R-1.

1. Assess the damage to each specimen to decide whether testing of that specimen is to continue.

2. Evaluate the condition of each specimen to determine what changes, if any, are necessary in package orientation in the puncture test to achieve maximum damage.

Section 13 Puncture Test (10 CFR 71.73(c)(3))

The package is dropped from a height of 1m (40") onto the puncture billet. This test uses the 12" high puncture billet. The billet meets the minimum height (8") required in 10 CFR 71.73(c)(3). The specimen has no projections or overhanging members longer than 12" which could act as impact absorbers, allowing the billet to cause the maximum damage to the specimen. The billet is to be bolted to the drop surface used in the drop tests.

The figures of this section illustrate the orientations for each puncture test.

The justification for each puncture orientation is the same as the orientation for the 30-foot drop test. If the orientation needs to be changed, the new orientation must be documented and approved with a justification describing how it would be a worst condition than the planned orientation.

Puncture Test Set-up

NOTE: *Because each test is designed to add to damage inflicted on a specific component or assembly in the preceding test, it is important that each specimen maintain its identity throughout the battery of tests and that the set-up instructions specific to the specimen are strictly followed.*

To set up a package for the puncture test:

1. Measure and record the weight of the test specimen.
2. Cool the test specimen to -40°F
3. Measure and record the test specimen and ambient temperatures.
4. Position the 1st specimen on the drop surface and position it according to the orientation shown in Figure 13.3.1
5. Raise the package so that the impact target is 1m (40") between the impact point on the package and the top of the puncture billet. Ensure the center of gravity is over the impact point
6. Photograph the set-up.
7. Start the video recorder.
8. Drop the package.
9. Stop the video recorder.
10. Record the damage to the package and take a photographic record.
11. Repeat steps 1 - 9 with the 2nd specimen positioned as shown in Figure 13.3.2

Speeimen TP186(A) Orientation for the Puncture Test

The objective of this drop orientation (Figure 13.3.1) is to continue the damage inflicted on the specimen by the 9m-drop test.

The specimen will be dropped with its axis normal to the drop surface with the lock assembly facing down.

The specimen will be offset from the Puncture Billet as shown so that the jacket does not hit first.

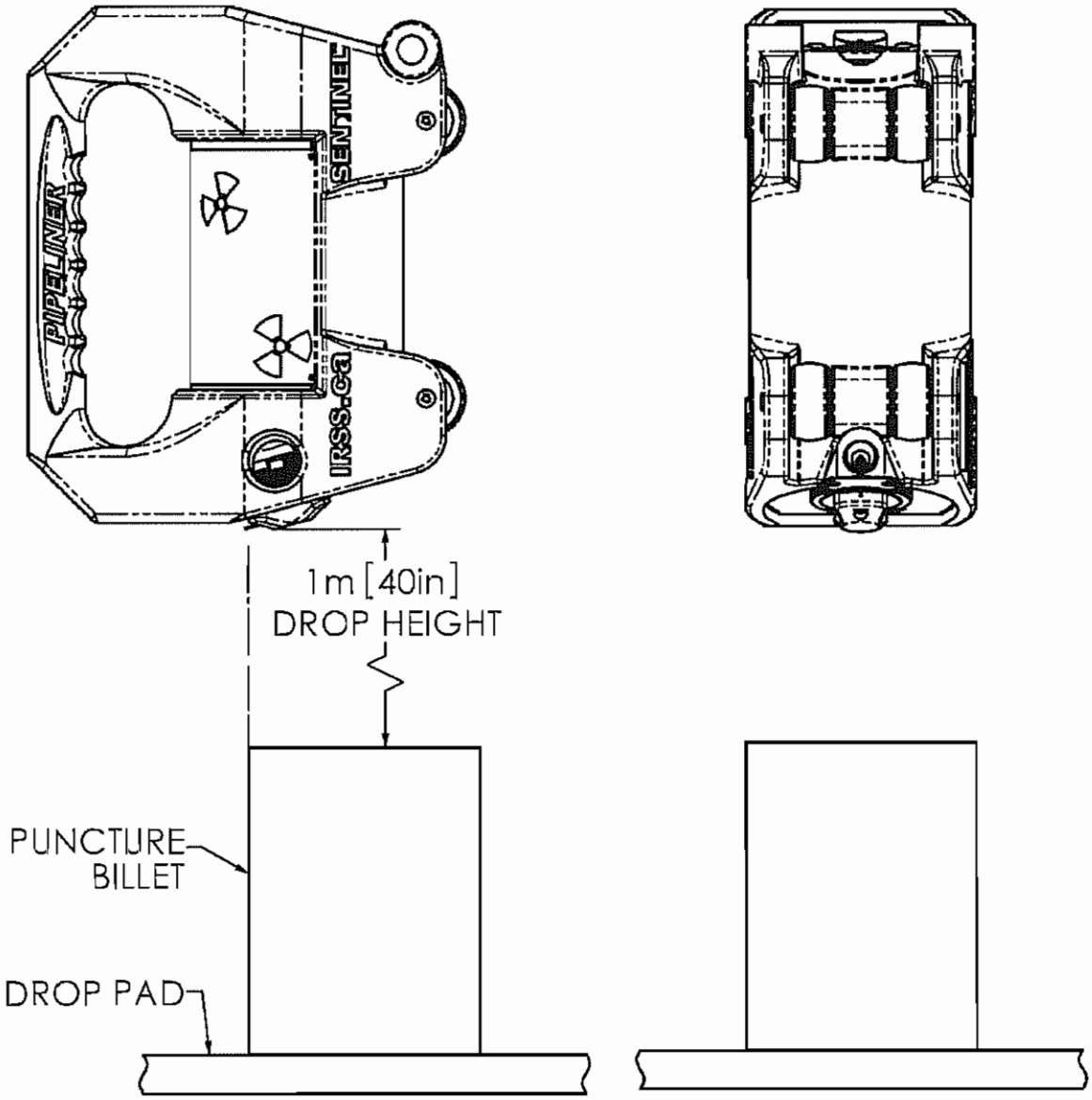

FIGURE 13.3.1 SPECIMEN TP186(A) ORIENTATION FOR THE PUNCTURE TEST

Specimen TP186(B) Orientation for the Puncture Test

The objective of this drop orientation (Figure 13.3.2) is to continue the damage inflicted on the specimen by the 9m-drop test.

The specimen will be dropped with its axis at approximately 22.5 degrees to the drop surface with the lock assembly facing down.

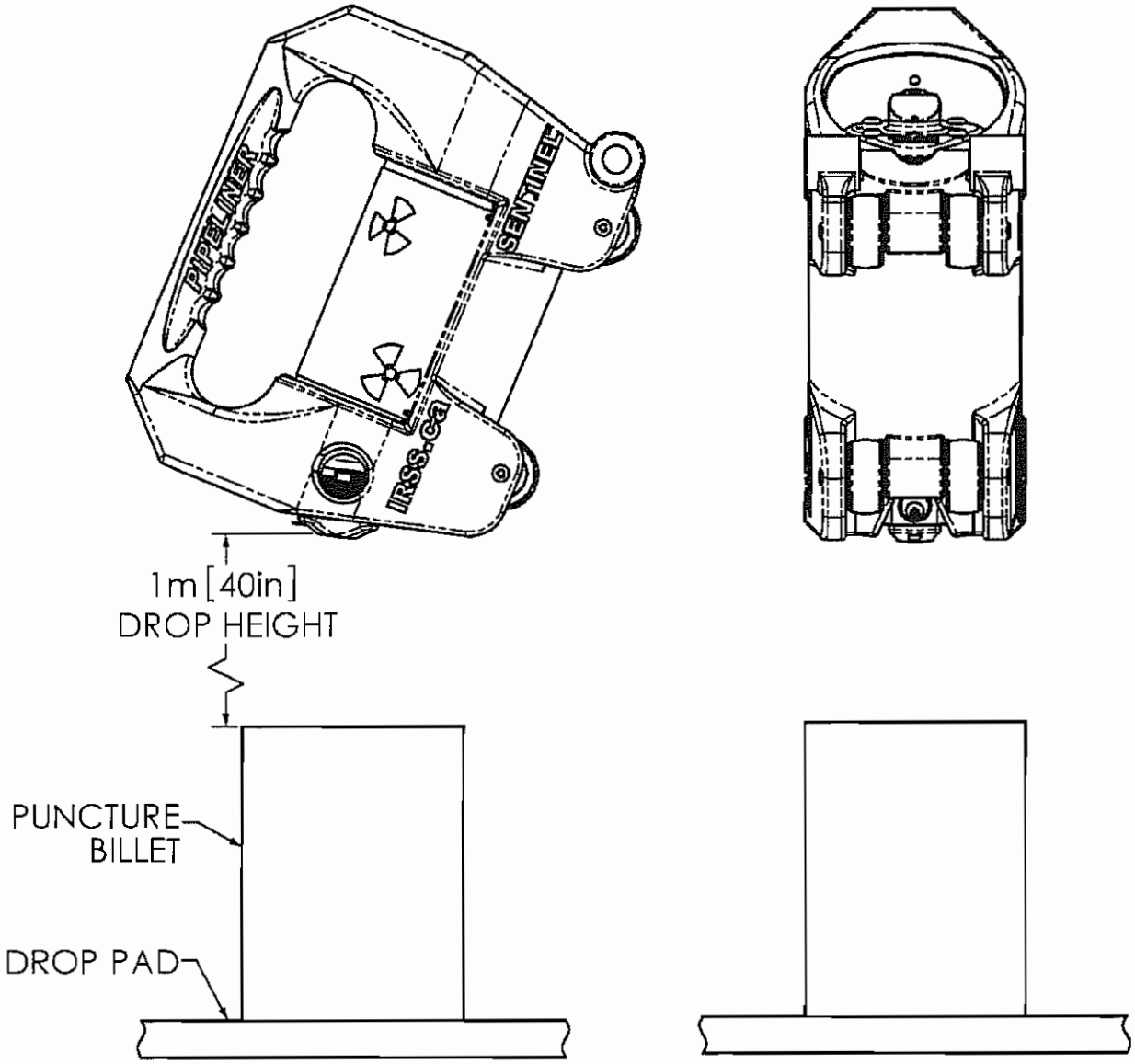

FIGURE 13.3.2 SPECIMEN TP186(B) ORIENTATION FOR THE PUNCTURE TEST

Puncture Test Assessment

Upon completion of the test, **Engineering**, **Regulatory Affairs** and **Quality Assurance** team members will jointly take the following actions:

Review the test execution to ensure that the tests were performed in accordance with 10 CFR 71, IAEA Safety Standards Series No. TS-R-1, and this test plan.

Make a preliminary evaluation of each specimen relative to the requirements of 10 CFR 71 and IAEA Safety Standards Series No. TS-R-1.

Final Test Inspection and Assessment

Perform the test inspection after the puncture tests.

1. Measure and record the damage to each of the test specimens. Measure and record the package for signs of any permanent strain.

2. Measure and record the location of the source from the front plate.

3. Remove and assess the condition of the simulated source.

4. Reassemble the packages using a representative active source, making sure that the source position and the package configuration are the same as they were immediately after the puncture test.

5. Measure and record a radiation profile of each test specimen in accordance with QSA Work Instruction WI-Q-1806.

6. Assess the significance of any change in radiation at the surface and at one meter from the packages.

7. Determine whether it is necessary to dismantle either of the test specimens for inspection of hidden component damage or failure.

8. If the decision is taken to proceed with the inspection, record and photograph the process of removing any component.

9. Measure and record any damage or failure found in the process of dismantling the test specimens.

Engineering, **Regulatory Affairs**, and **Quality Assurance** team members will make a final assessment of each test specimen and jointly determine whether the specimens meet the requirements of 10 CFR 71 and IAEA TS-R-1.

Section 15 Worksheets

Use the following worksheets for executing the tests of section 8. Each test shall have three worksheets; an equipment list, a procedure checklist, and a data sheet. Record the information onto copies of these worksheets for each test performed.

Attach a copy of the relevant inspection report or calibration certificate after the range and accuracy of the equipment has been verified.

Test Specimen & Equipment Documentation

Test Specimen

Configuration	Drawing Number	Serial Number	**Attach IIR	**Attach NCR	**Attach Route Cards
Pipeliner Transport	88095 Rev A	TP180A	Yes	See IIR	See TM1 279
Pipeliner Transport	88095 Rev A	TP180B	Yes	See IIR	See TM1 279
Pipeliner Transport	88095 Rev A	TP180C	Yes	See IIR	See TM1 279

**** Note: Copies of these records are stored on the network in the following directory:**
"K:\4 Design History Files\Model 880 Pipeliner\Verification (Testing)\TP 186 \Test Specimen Records"

Tools & Equipment

Tool Description	Enter the Model and Serial Number Mark NA when not used.	**Attach Inspection Report or Calibration Certificate
Drop Surface, Drawing No. T10740	S/N 001	Yes
Puncture Billet, Drawing No. T10143	S/N 01	Yes
Weight Scale		Yes
Record any additional tools used to facilitate the test and attach the appropriate inspection report or calibration certificates.		
Radiation Meter with Probe	I863 Meter / SHP-270 Probe	Yes

Signature	Print Name	Date
Engineering:		
Regulatory:		
Quality Assurance:		

WORKSHEET 15.2 DROP & PUNCTURE TEST CHECKLIST

Test:		
Test Location:		
Step	**Data**	
1. Record test specimen serial number:		
2. Record the test specimen weight:		
3. Record the ambient temperature (°C):		Instrument S/N:
3. Record the test unit temperature (°C):		Instrument S/N:
4. Identify set-up orientation figure:		
5. Record drop height.		
6. Photograph set-up in at least two perpendicular planes.		
7. Begin video recording of the test so that impact is recorded.		
8. Release the test specimen.		
9. Stop the video recorder. Ensure the point of impact and orientation specified in the plan has been achieved.		
10. Record the damage to the test specimen. Use a separate sheet and attach, if needed.		
11. Engineering, Regulatory Affairs and Quality Assurance make a preliminary assessment relative to 10 CFR 71. Record the assessment on a separate sheet and attach.		
Test witnessed by (Signature)	**Print Name**	**Date**
Engineering:		
Regulatory Affairs:		
Quality Assurance:		

WORKSHEET 15.3 DROP & PUNCTURE TEST DATA SHEET

Test Unit Model/Serial No.:	Test:
Test Date:	Test Time:
Describe drop orientation and drop height:	
Describe impact (location, rotation, etc.):	
Describe on-site inspection (damage, broken parts, etc.):	

On-site test assessment:

- Was the test performed in accordance with 10 CFR 71, IAEA TS-R-1 1996, and this test plan? **Yes or No.**
- Does the test specimen meet the requirements of 10 CFR 71 and IAEA TS-R-1 1996 for this test? **Yes or No.**
- Are any changes to subsequent drop orientations needed to achieve maximum damage? **Yes or No.**
  If yes, then identify and justify.
- Did sufficient damage occur to warrant additional drop? **Yes or No.**
- Should testing continue with this test specimen? **Yes or No.** If yes, next test: _____
- Will the test specimen pass the thermal test based on the accumulated damage assessment? **Yes or No**

Engineering: **Regulatory:** **QA:**

Describe any post-test disassembly and inspection:	
Describe any change in source position (if possible):	
Describe results of radiography (if performed):	
Completed by:	Date:

WORKSHEET 15.4 TEST INSPECTION DATA SHEET

Test Specimen Serial No.:	Last Test Performed:
Describe and measure (if appropriate) any damage or broken parts, etc.:	
Describe and measure (if appropriate) any signs of permanent strain or deformation:	
Describe the condition of the simulated source wire assembly.	
Reassemble the package using a representative active source, making sure that the source position and the package configuration is the same as they were immediately after the last test. Measure and record a radiation profile of each test specimen in accordance with QSA Global Work Instruction WI-Q-1806.	
Compare the pre-test dose levels with post-test dose levels at the surface of the package and at 1 meter from the surface of the package.	
Is a radiograph required to inspect for hidden component damage or failure? If radiography is performed, describe any damage or failures found.	
Completed by:	Date:

ATTACHMENT 16.1 IRSS "WORK INSTRUCTIONS FOR PERFORMING PIPELINER RETROFIT"

IR SUPPLIES & SERVICES INC
14705-116 Avenue,
Edmonton AB T5M 3E6
Office 780 452 4761
Fax. 780 453 5239

Effective Date:
Oct 21/09

Originator	Approved By
Name: Robert Muschker	Name: Robert Muschker
Date: Oct 21/09	Date: Oct 21/09

Work instruction for performing PipeLiner Retro Fit

Scope

This work instruction describes how to correctly install 880 projector models, Delta, Sigma, Elite and Omega, into the PipeLiner accessory. The PipeLiner accessory has been designed exclusively for the 880 series of projectors using only a source assembly with a capsule diameter of ¼".
Only a technician trained in the operations and maintenance of 880 projectors and specifically approved by QSA Global, can perform this modification retrofit to an 880 projector.

Tools Required

1. 5/32 hex socket security bit with drivers or 5/32 hex socket security key
2. 3/16 hex socket security bit with drivers
3. Inch pound torque wrench (3/8 drive) with adapters
4. Right angle 3/8 air operated drill (small arm)
5. 5/32 short drill bit (2 ¼" or shorter)
6. 3/8 hex key or 3/8 hex bit with drivers
7. Small flat head screw driver

Equipment

1. Safety glasses
2. Survey meter and Dosimetry (PPE)
3. 880 projector Delta, Sigma, Elite, Omega (Empty)
4. PipeLiner retro fit kit
5. Source storage container if applicable
6. Guide tube extension and controls if applicable
7. QSA KIT018, Detent retrofit kit

Preparation

Oct 21/09

Rev#: 1	1	Date: June 15, 2009

1. Inspect the tools and the equipment too ensure they are in good working order, and fully functional.
2. With a calibrated working survey meter survey the 880 projector to ensure surface reading are below 200mr/hr

3. Perform a daily inspection on the 880 projector as required.

4. If the 880 projector has a souree assembly, remove the source assembly to a safe storage location.
   Note: performing this act can only be done by troined individuols wearing proper dosimetry

Disassembly of standard 880 projector

1. Remove label by drilling out the four rivets that hold the label to the projector. (Note: rivets cannot be removed and must be carefully pushed into the housing to allow new rivets to be installed)

2. Drill out the four-¼ inch SS rivets that hold the 880 projector to the jacket taking care not to enlarge the holes in the metal housing.

3. Remove source tag if present.

4. Slide the 880 projector out of the original standard jacket.

5. Remove the rear end plate from the 880 projector.

Assembling 880 projector into the PipeLiner

1. Match up the correct color of PipeLiner Jackct, part# PL1000H, for Delta, Sigma, Elite or Omega.

2. With the PipeLiner Jacket, positioned on its wheels, invert the 880 projector 180° and slide the 880 projeetor into the PipeLiner jaeket so the lock slide aligns with the lock slide access hole of the PipeLiner jacket. The 880 projector will be orientated so that the printing on the rear lock assembly will be upside down.
   Note: Be careful while handling projector, as it is nat attached at this time. Tipping or moving the PipeLiner could cause the projector to slide out unintentionally.

OCT 21/09

Rev#: 1	2	Date: June 15, 2009

3. Install shoe assembly part# PL1000S. This is accomplished by matching up the shoe with the jacket in the open position; both the wheels of the Jacket and the pipe shoe feet will be flat on the work surface. Use the pipe shoe pivot bolts Part# PL1003 to attach the lower portion of the shoe.

4. Install Collimating guide tube part # PL1017 by matching up the bayonet fitting male connector of the collimator with the female connector of the outlet port. Insert the collimator and turn 90°. Turn outlet port cover 45° to lock in collimator and open outlet port. The collimating guide tube attachment is accomplished in the same fashion as a standard bayonet fitting.

5. Lift up pipe shoe to mate surface of shoe and jacket. Install bolt part# PL1001. Once the bolt is secure, gently tilt entire assembly forward so that the PipeLiner wheels are off the work surface and the Pipe shoe is flat on the work surface (exposure position). The collimating guide tube will now be resting on the inside surface of the shoe. Check alignment of lock slide hole. The lock slide hole may not be perfectly aligned forward to back but should aligned evenly top to bottom and at no point should the hole on the jacket cover any portion of the hole on the 880. Once the projector is in this position the projector is properly aligned and ready for mounting.

6. With the 880 projector still in position and using an angle drill, drill into the PipeLiner jacket through the top mounting hole ½" deep using the 5/32 drill bit and right angle drill. *(Do not drill beyond ½" deep. Tape can be used to mark the drill bit ½" from the tip to accamplish an accurate depth)* Screw the #14 x ¾ tamper proof screw into the top hole. *(Turn screws **by hand** slowly so urethane doesn't strip out)* Drill and screw the remaining 2 holes securing the rear of the 880 projector.

Note: If a small enough drill isn't available the hole could be marked while the 880 projector is in position and the holes drilled after the 880 projector is removed from the jacket.

7. Tilt the PipeLiner back onto its wheels. Open the shoe by removing the PL1001 bolt, hinge shoe forward and remove the collimating guide tube. Remove shoe by removing the 2 PL1003 hinge bolts.

8. Remove the front end plate.

9. Repeat step #6 on the front end of the projector.

8. Install QSA KIT018, Detent retrofit kit, per instructions included with the kit

OCT 21/09

Rev#: 1	3	Date: June 15, 2009

10. Replace the front and rear end plates of the 880 projector according to manufacture speeifications.

11. Insert a dummy source into the device

12. Attach the PipeLiner collimating guide tube

13. Perform a function test and cycle the dummy source several times ensuring the projector is functioning properly.

14. Inspect label to ensure it is in good condition, replace if necessary. Drill new holes in label to **match** holes on projector. DO NOT DRILL NEW HOLES IN THE 880 ASSEMBLY. Doing so may damage the shield and will violate Regulatory requirements for the device. Tuck the label under the edges of the PipeLiner jacket and rivet label to projector.

15. The source may now be reinserted and the source tag attached. An area has been designed to accommodate the source ID tag on the rear of the projector.

Oct 21/09

Rev#: 1	4	Date: June 15, 2009

ATTACHMENT 16.2 DRAWING NO 88015 REV C – MODEL 880 150 CI BODY ASSEMBLY

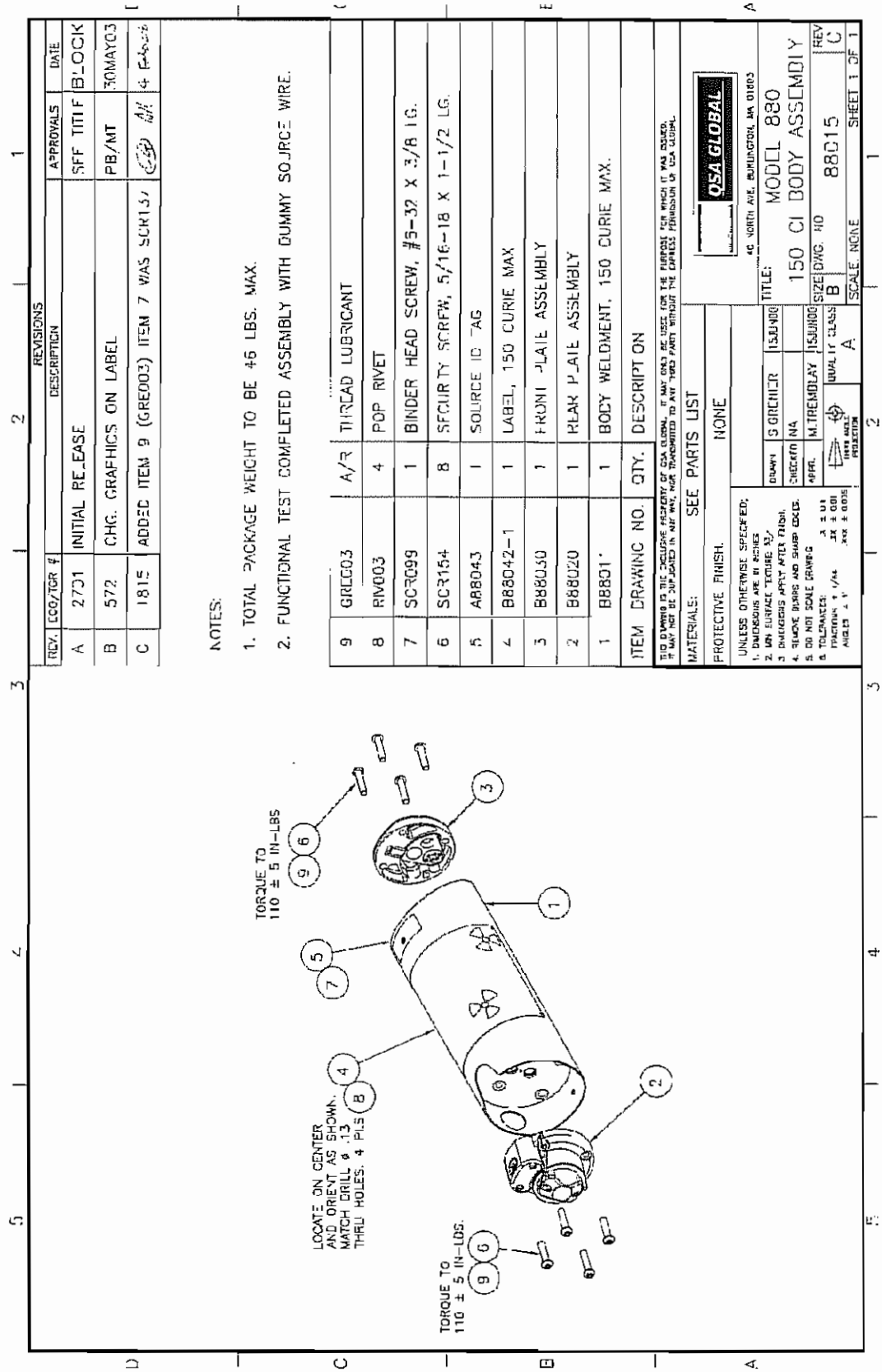

ATTACHMENT 16.3 IRSS PIPELINER OPERATIONS AND MAINTENANCE MANUAL, APR 4, 2007

To be attached as a separate document

THE PIPELINER

OPERATIONS AND MAINTENANCE MANUAL

ACCESSORY FOR SENTINEL 880

DELTA

SIGMA

ELITE

OMEGA

DANGER - IMPORTANT WARNINGS

The IRSS PipeLiner System must be operated only by trained and qualified radiographers who have read and understood this Operations Manual and the 880 Series Source Projector Operating and Maintenance Manual, or by trained assistants working under their direct supervision.

WARNING

The use of radiographic exposure devices by unqualified personnel or when safety procedures are not fully met, could result in life threatening dangers.

Gamma radiography systems emit high levels of penetrating ionizing radiation during use and present a significant health risk to operators and the public including injury, sickness and/or death if appropriate safety and operational procedures are not employed.

Unshielded sources or source assemblies must never come in contact with any body parts under any circumstances.

Since gamma radiation is undetectable by the human senses, strict operating and emergency procedures must be followed. The proper use of PPE must be employed at all times during radiographic operations including calibrated survey meters, direct reading dosimeters, direct alarming dosimeters and the wearing of thermoluminecent dosimeters.

During use of this radiography system, never assume the position of the radiation source. Always conduct a thorough confirmatory survey using a calibrated survey meter to verify the location of the radiation source. Be reminded that a multitude of overexposure incidents which include injuries are directly attributed to a failure of the operator to perform or supervise an adequate confirmatory survey.

It is very important and required by regulation to prevent access by unauthorized persons to radiography equipment and to the area where radiography is performed.

Take advantage of the three basic radiation protection methods to minimize radiation exposure.

TIME

Spend less time near a source of radiation

DISTANCE

Increase your distance in a direction away from a radiation source

SHEILDING

Use effective shielding between you and the source of radiation

DO NOT

Perform any unauthorized modifications to the radiography exposure device or the components of this system

Use components that are not approved for use with this radiography system or after market components as this may compromise the safety designed into the system.

DO

Perform daily safety inspections of the radiography system for defects, wear and tear, replacing components as required. Inspections will be carried out or supervised only by trained and qualified radiographers

TABLE OF CONTENTS

2. DANGER—IMPORTANT WARNINGS

4. TECHNICAL SPECIFICATIONS

5. APPLICATION

7. DIAGRAM

8. RARTS LIST

9. WARRANTY AND LIMITATION OF LIABILITY

10. OPERATING INSTRUCTIONS

12. OPERATION

13. INSPECTION AND MANTENANCE

TECHNICAL SPECIFICATIONS

THE 880 SERIES PROJECTOR PIPELINER ACCESSORY

DESCRIPTION

The PipeLiner is a rugged, easy to use attachment for the Sentinel 880 series of gamma ray radiography projectors to improve utilization and reduce dose rates to operators when performing pipeline radiography, while still maintaining the option of conventional set ups. The addition of the PipeLiner accessory essentially converts the 880 series of projectors into a dual purpose exposure device.
The PipeLiner accessory consists of four main components; the jacket, collimating guide tube, pipe shoe and swing arm assembly

PIPELINER JACKET

The PipeLiner jacket is made of polyurethane for strength, durability and weight reduction The jacket is similar to the stock 880 jacket in design and serves the same functions with a few exceptions. Wheels have been added to the jacket for easy transportation from weld to weld along pipelines. Accommodations have be made for the attachment of the “pipe shoe” and “ swing arm assembly” to the front of the jacket.
A significant change, mounts the projector 180˚ or upside down in contrast to it’s current or original jacket orientation. This new position gives a better angle to the control assembly for added durability and the collimating guide tube for ease of operation.
The PipeLiner jacket is attached to the 880 device in the same manner as the original jacket, with four stainless steel rivets.

PIPELINER COLLIMATING GUIDE TUBE

The collimator, guide tube and bayonet fitting are made of tungsten and manufactured as one component producing a unique design that maintains continuous shielding of the source while it is being projected to the beam port.
The beam port of the guide tube has been carefully designed to minimize the size of exclusion areas, reduce dose to operators, virtually eliminate flash dose, while still maintaining proper beam orientation.
The collimating guide tube fits securely inside the “Pipe Shoe” when in use.

PIPE SHOE

The pipe shoe is made from similar polyurethane as the jacket and is designed to sit on the pipe during exposures. It consists of a molded bottom for positioning the exposure device along the center line of the pipe. This portion also includes the focal opening, a transverse groove that is used to align the beam port of the collimating guide tube into the position that best suits the intended geometry of the radiograph.
The top section consists of a raised area and a large indent. The raised portion will not allow the shoe to be closed unless the 880 outlet port cover is either fully closed or in the fully open position with the collimating guide tube attached. The indented area accommodates the collimating guide tube keeping it secure and protected.
The jacket accommodates the pipe shoe at the front by hinging it to the bottom portion of the jacket using two 2 3/4”x 2” socket head shoulder bolts. This hinging action is important as it allows the PipeLiner to be quickly prepared for the use of conventional guide tubes. The connection of the pipe shoe is completed by fastening the top portion of the jacket through the handle with the 3/8” x 12” socket head shoulder bolt.

CLAMP ASSEMBLY

The clamp assembly consists of three main sections, the right side plate including swing arm, the left side plate, and the hook plate that includes strapping, quick release latch and cam buckles.
The swing arm and right side plate is attached to the right side of the pipe shoe and the left side plate is attached to the left side using four 3/4”x 2” socket head shoulder bolts with the two rear bolts also acting to hinge the pipe shoe to the PipeLiner Jacket.
An important safety feature has been built into the Clamp assembly that will not allow the hook plate to be removed from the hook plate pin without depressing the cam buckles, releasing the strapping. This feature will not allow the PipeLiner to prematurely disengage from the pipe and fall to the ground. If the swing arm has not been engaged and the PipeLiner is accidentally allowed to fall uncontrolled it will only swing to the bottom of the pipe where it will hang until it is righted or removed.

APPLICATION

The PipeLiner Accessory has been designed for the industrial applications of gamma radiography of pipeline butt welds using double wall contact and single wall viewing technique.
By hinging open or removing the pipe shoe standard guide tubes can be attached to the 880 projector and conventional radiography performed. (SEE 880 OPERATION and MAINTENANCE MANUAL)

880 PROJECTOR

The PipeLiner is designed specifically for the 880 series of projectors. It is necessary that the operator has been trained and qualified in the operations of the 880 projector. Only those individuals who have received a certificate of competence for the maintenance of 880 devices should perform the jacket replacement. See your nearest Sentinel service center.

SOURCE ASSEMBLIES

The PipeLiner accommodates 1/4” diameter source capsules using TCI 5222 Teleflex cable style source assemblies **only**.
The following source assemblies meet the above requirements:

ISOTOPE	ASSEMBLY MODEL NO.	GAMMA ENERGY RANGE	HALF LIFE	APPROXIMATE STEEL WORKING THICKNESSES
Selenium 75	A424-25W	66-612 keV	120 days	3-29mm
Iridium 192	A424-9	206-612 keV	74 days	12-63mm
Cobalt 60	A424-19	1.17-1.33 MeV	5.27 years	50-150mm

Activities

Authorized isotope activities are dependant on the 880 model, user license, and regulatory restrictions.

OPERATING DISTANCE/POSITION

All lengths of control assemblies can be used with the PipeLiner accessory. A 5.5 meter (18 feet) PipeLiner control assembly is available that incorporates a short .3 meter (1 foot) return. This control assembly should only be used in conjunction with the PipeLiner accessory.
It is recommended that the operator, under normal conditions, position himself to the rear of the projector and no closer than 5 meters during an exposure.
The shielding characteristics of the collimating guide tube are such that it favors the operator standing directly behind the projector. Directly forward of the projector offers the least protection while the sides as you proceed from front to back will continue to produce a reduction in dose rate until directly behind the projector.

ACCESSORY SPECIFICATIONS

Manufacturer
Industrial Radiography Supplies and Services Inc.
14705 116 Ave
Edmonton, Alberta
Canada T5M 3E8

Primary Application
Industrial Pipeline Gamma Radiography

ACCESSORY FOR:

880 MODEL	ASSEMBLED WEIGHT	LENGTH	WIDTH	HEIGHT	SOURCE ASSEMBLIES
DELTA	65LBS	15”	7.5”	10”	A424-25W, A424-9,A424-19
SIGMA	65LBS	15”	7.5”	10”	A424-25W, A424-9,A424-19
ELITE	55LBS	15”	7.5”	10”	A424-25W, A424-9,A424-19

MATERIALS

Polyurethane jacket and pipe shoe, aluminum and stainless steel

INSPECTION REQUIRMENTS

Daily pre-operational inspection for obvious damage to the system

MAINTENANCE REQUIRMENTS

Clean and dry after each days use

OPERATING TEMPATURE RANGE

-40˚C to 149˚C

NOTICE

*The 880 PipeLiner accessory jacket has been registered as part of the Type B(U)-85 shipping container for AEA Technology QSA Inc. source assemblies and thus can remain on the projector during shipment. However all other parts of the PipeLiner accessory must be removed in their entirety before transport.
The purpose of this manual is to provide information which will assist qualified radiographers in using the PipeLiner accessory with the 880 series of projectors. The user must be thoroughly familiar with the 880 instruction manual and this instruction manual before attempting operation and use of this equipment.
Prior to use of PipeLiner Jacket in conjunction with the 880 projector as a shipping container a registered user certificate specifying the combination must be obtained from the CNSC.
It is the responsibility of the user’s of this equipment to comply with local, national and international regulatory, licensing and transport rules and regulations as they apply in their respective countries.

* to be approved

DIAGRAM

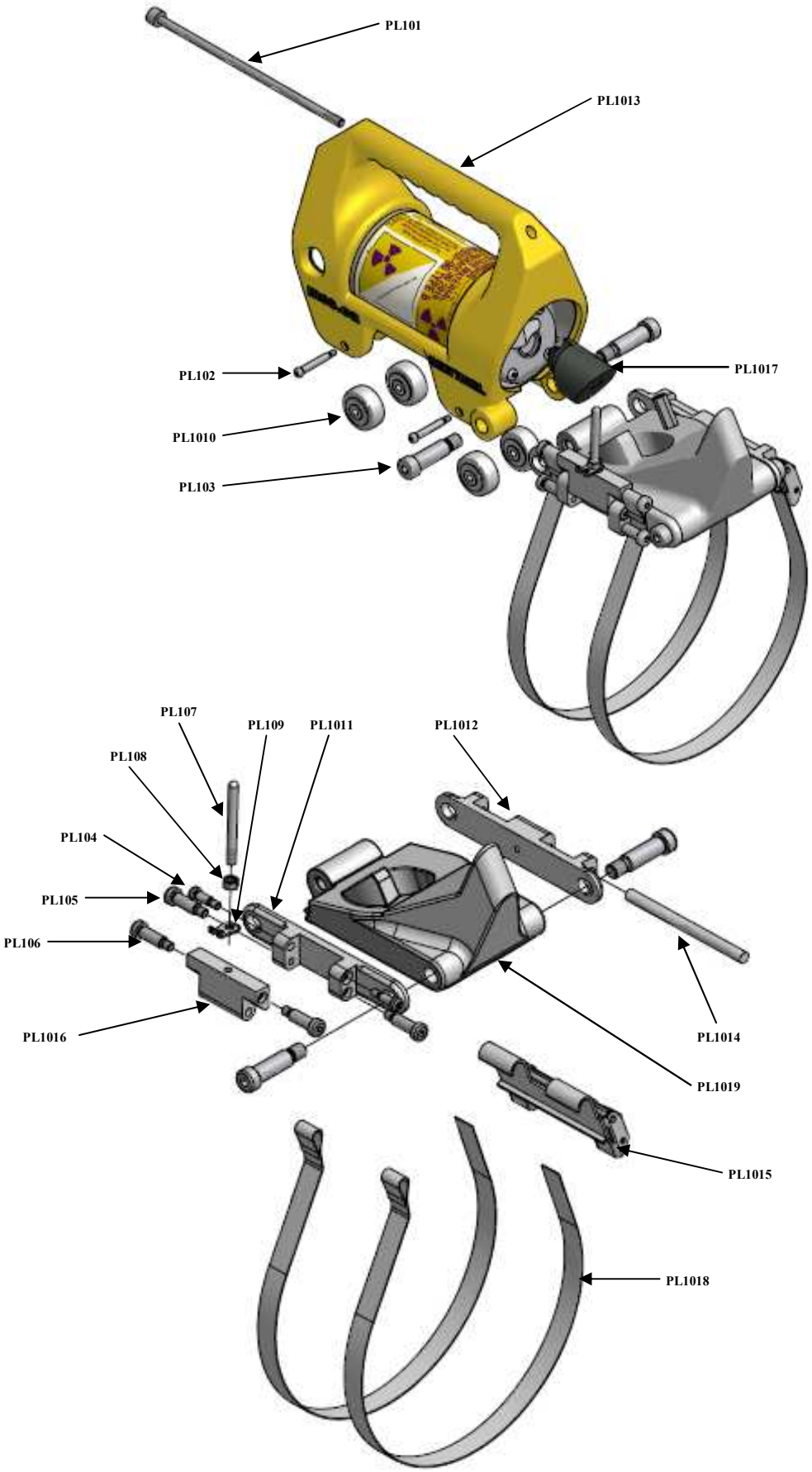
PL101
PL1013
PL102
PL1017
PL1010
PL103
PL107
PL109
PL1011
PL1012
PL108
PL104
PL105
PL106
PL1016
PL1014
PL1019
PL1015
PL1018

PARTS LIST

PART NUMBER	QTY	DESCRIPTION
PL101	1	3/8” x 12” SOCKET HEAD CAP BOLT
PL102	4	5/16” x 1 3/4” SOCKET HEAD CAP BOLT
PL103	4	3/4”x 2” SOCKET HEAD CAP BOLT
PL104	2	3/8” x 3/4” SOCKET HEAD CAP BOLTS
PL105	2	1/2” X 1 1/4” SOCKET HEAD CAP BOLTS
PL106	2	1/2” X 1 1/4” SOCKET HEAD CAP BOLTS
PL107	1	SWING ARM HANDLE
PL108	1	SWING ARM HANDLE NUT
PL109	1	BUNGEE CATCH
PL1010	4	WHEELS
PL1011	1	RIGHT SIDE PLATE
PL1012	1	LEFT SIDE PLATE
PL1013	1	PIPELINER JACKET
PL1014	1	HOOK PLATE PIN
PL1015	1	HOOK PLATE
PL1016	1	SWING ARM
PL1017	1	COLLIMATING GUIDE TUBE
PL1018	2	STRAPS
PL1019	1	PIPE SHOE

WARRANTY AND LIMITATION OF LIABILITY

Industrial Radiography Supplies and Services Inc. (IRSS, herein referred to as the manufacturer) warrants its product which it manufactures and sells to be free from defects in material and workmanship for a period of one year from the date of shipment. This warranty shall not apply to any products or parts which have been subjected to misuse, improper installation, repair, alteration, neglect, accident, abnormal conditions of operation, or use in any manner contrary to instruction or intended application.

The manufacturers liability under such warranty shall be limited to replacing or repairing at it's option, any parts found to be defective in such respects, which are returned to the manufacturer, transportation prepaid; or at it's option, to returning the purchase price thereof.

The warranty on other manufacturer's components shall be that of the original manufacturer whose warranty shall be binding.

In no event shall the manufacturer be liable for any incidental or consequential damages whether or not such damages are alleged to have resulted from the use of such product in accordance with instructions given by or referred to by the manufacturer.

IRSS assumes no liability or responsibility for the usage of any radioactive material or device generating penetrating radiation used in connection with this product.

All other warranties, except those warranties expressly stated herein, including without limitation warranties of, merchantability and implied warranties of fitness, are expressly excluded.

The warranty on this accessory is specifically limited to its use with the Sentinel 880 series of gamma ray projectors and sealed source assemblies as described on page 4 of this manual.

IRSS shall not be liable for any errors or omissions contained herein and the provision by IRSS of the information set out in this manual does not in it's self constitute acceptance of any liability on the part of IRSS.

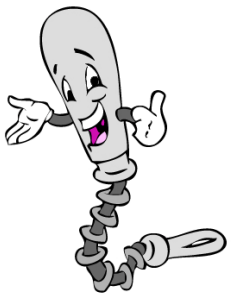

OPERATING INSTRUCTIONS

NOTE

This manual assumes that the reader has a thorough understanding of the operation and maintenance of the Sentinel 880 projector. Only personnel trained and qualified in the operation and maintenance of 880 projectors should attempt to use the PipeLiner accessory and only personnel with formal maintenance training should attempt to install an 880 projector into the PipeLiner Jacket.

880 PROJECTOR CONVERSION

Tools required

Only specially trained personnel should attempt this procedure.
SEE SENTINEL 880 SERIES SOURCE PROJECTOR OPERATING AND MAINTENANCE MANUAL OR YOUR LOCAL DISTRIUTOR

Parts Required

IRSS PipeLiner Jacket
PipeLiner Label
4 - 1/4” Stainless Steel Rivets
***Retrofitted 880 Projector**

***NOTE: 880 Projectors to be converted for use with the PipeLiner Accessory must have been retrofitted by a trained technician before conversion can be performed. See your Sentinel dealer for information on the necessary retrofits needed for your specific 880 projector.**

Conversion

In order to use the PipeLiner accessory with the 880 projector the projector must be removed from it’s original jacket and reinstalled into the PipeLiner jacket. **This can only be performed with an empty projector.**
Remove the rear end plate, labels and four stainless steel rivets holding the projector to the jacket. (See Sentinel 880 Series Source Projector Operating and Maintenance Manual)
Once the projector has been removed from its original jacket it is rotated 180˚ and inserted into the PipeLiner jacket, making sure that the plunger lock access holes in the jacket and projector line up correctly, and then riveted into place. The rear end plate and new labels can now be re-installed and the source assembly transferred back to the device. This completes the jacket installation.
At this point the 880 projector can be operated using conventional guide tubes and controls, the only difference in operation being the upside down positioning of the device to its original orientation. Operators will soon become accustomed to this new position that provides improved support of control assemblies.

PIPELINER ASSEMBLY

Tools Required

3/8” T Handle Allen Key (Supplied)

Parts Required

Converted 880 Projector
Pipe Shoe
Right Side Plate with Swing Arm
Left Side Plate
Tungsten Collimating Guide Tube
Hook Plate
Polyurethane Straps
4 - 3/4” x 2” Socket Head Cap Bolts
1 - 3/8”x 12” Socket Head Cap Bolt

Pipe Shoe Attachment

Place the Pipe Shoe foot side down, hinge joint in front of the projector with the 880 projector on it's wheels. Approaching from the right side, plunger lock opening to your left, slide the pipe shoe back toward the projector inserting the pipe shoe hinge joint between the PipeLiner jacket hinge joints.
Align the over right side plate bolt hole, swing arm handle pointing up, with the jacket hinge joint bolt hole and insert the 3/4" x 2" socket head cap bolt and tighten loosely. Align the over right side plate bolt hole with the bolt hole in the front of the pipe shoe and insert a 3/4" x 2" socket head cap bolt through the hole and hand tighten using the T handle Allen key wrench.
Approaching the projector from the opposite side attach the left side plate in the same manner as the over right side plate using the two remaining 3/4" x 2" socket head cap bolts. With the front bolts securely fastened the rear bolts can now be securely hand tightened using the T handle Allen key wrench. The pipe shoe is now effectively hinged to the PipeLiner jacket.

Attaching The Collimating Guide Tube

The collimating guide tube has been manufactured with a bayonet connector, all as one piece. The swivel bayonet connector used with conventional guide tubes is not used with the PipeLiner accessory.
Connect the collimating guide tube in the same manner a you would a conventional guide tube remembering that the 880 projector is now upside down or 180˚ to its original position. (See step 2 "Connecting the Source guide tube(s)" pg.2.3, in the Sentinel 880 Series Source Projector Operating and Maintenance Manual)
Once the collimating guide tube is attached and the outlet port cover fully rotated clockwise until it stops, the pipe shoe can be lifted up, closing it over the collimating guide tube sealing from view, the front of the device. The 3/8" x 12" socket head cap bolt is then inserted through the carrying handle of the jacket and tightened securely using the T handle Allen key wrench.

Attaching The Clamping Plate

Select a strap length that best suits the diameter of pipe being radiographed. The proper length should leave a minimum of 6" of strapping material or tag end, projecting out of the cam buckles.
Placing the hook plate, hook side down, thread about 8" to 12" of the urethane strapping, unlooped end under the cam buckle. Reversing the direction, thread the strapping back and through the cam buckle jaw. Perform the same steps for the other cam buckle. The straps are now secured to the hook plate.
There are four horizontal posts attached to the over right side plate and swing arm. Two fixed "fulcrum" posts below and two posts that pivot as part of the swing arm. Attach the looped end of the strapping to the swing arm posts by sliding the loops over the ends. The hook plate should be positioned so that the hook points away from you and the straps should not be twisted or crossed but remain parallel.
Next lift the hook plate to create slack in the strap and force it between the gap made between the fixed fulcrum post and the over right side plate attachment bolt, positioning the strap behind the fixed fulcrum post. Repeat for the other strap.
This completes the assembly of the Sentinel 880 PipeLiner accessory.

Disassembly

If the operator wishes to use conventional guide tubes only the 3/8" x 12" socket head cap bolt needs to be removed to allow the pipe shoe to hinge open. Enough space is provided to attach conventional guide tubes. If the operator wishes to remove the pipe shoe entirely, in addition to the 3/8" x 12" socket head cap bolt, the two 3/4" x 2" hinge bolts are all that need to be removed. This procedure will leave the swing arm assembly attached to the pipe shoe for quick reattachment later.

NOTE

The 880 series of projectors are not approved for transport of sealed sources while the pipe shoe remains attached to the Jacket.

OPERATION

Set up

Place the PipeLiner accessory, wheels first, pipe shoe forward, on the pipeline and roll it to within a few inches of the weld to be radiographed. Number belts or other identification markers can be attached to the pipe adjacent to the weld at this time. The projector is then tilted forward off it's wheels so that it is resting on the feet of the pipe shoe. The feet of the pipe shoe are designed to accommodate piping as small as 2" diameter and will automatically align the beam port along the center line of the pipe.
Position the focal opening, the apex of the transverse groove in the bottom of the pipe shoe, directly above the weld. This position can be arranged to the front or rear of the weld depending on the intended resultant radiograph.
Working from the right side of the PipeLiner with the swing arm handle in the "open" or down position, keep one hand on the PipeLiner and either reach over or under the pipeline, grasp the hook plate then hooking it onto the left side plate hook pin.
While still holding the device in place with one hand, grasp the tag ends of the straps with the your free hand and pull in a downward direction until the straps are tight. If the straps have been tightened properly it should be impossible to remove the hook plate from the hook pin without loosening the straps. In some cases, and especially with small diameter pipe, 3" and under, it is useful to give the straps one or two quick tugs to ensure the straps are sufficiently tight. Now lift the swing arm handle to lock the device securely to the pipe. It should now require a force much greater than the weight of the device to move the projector around the radius of the pipe. The larger the diameter of the pipe the greater the force required to move it, or the less tension required to hold the device in place.
The remote control assembly can now be connected to the projector and the exposure performed. (See Sentinel 880 Series Source Projector Operating and Maintenance Manual Step 3 pg.2.5).

360° Rotation Around the Pipe

In order to position the PipeLiner to produce radiographs of the entire weld, it needs to be rotated into various positions around the circumference of the pipe. To accomplish this, first grasp the PipeLiner near the plunger lock opening with your left hand, curling your fingers over and around the end of the jacket. Next grasp the swing arm handle and lower it slightly to release just enough tension so that the projector can be pushed or pulled and rotated into the position required. The swing arm handle can, in this fashion, be used as a break providing the operator a high degree of control. Once you have attained the desired position, the swing arm handle is lifted locking the projector into position. This maneuver requires very little effort and can be accomplished with considerable accuracy with only a little practice.

Positioning of Film or Flexible Imaging Plates

Provisions for the attachment of bungee cord or similar material to the hook plate and a catch to fasten the bungee cord to, has been added to the swing arm handle so that film cassettes or imaging plates can be held firmly in place.

Moving to the Next Welded Joint

Once the required number of radiographs have been produced and it is time to move to the next welded joint, the PipeLiner is rotated back to the upright position on top of the pipe. If the remote control assembly is wound around the pipe it should unwound at this time and the pistol grip hung over the pipe close to and in front of the PipeLiner.
With your left hand holding firmly onto the PipeLiner, remove the hook plate from the hook pin by depressing the quick release mechanism with your right hand and allow it to fall under the pipe. Tilt the PipeLiner back onto it's wheels. Retrieve number belts and/or other identification markers and again with your right hand, reach under the pipe and retrieve the clamping plate. Position the clamping plate comfortably in your left hand while still maintaining a grip on the PipeLiner handle. This may seem awkward at first but becomes quite routine very quickly.
Pick up the pistol grip with your right hand and begin rolling the PipeLiner along the pipe to the next welded joint. The set up procedure is now repeated.

INSPECTION AND MAINTENANCE

NOTE

Maintenance instructions in this manual for the PipeLiner accessory apply only to the parts listed in this manual. For maintenance instruction for the 880 projector, remote control assemblies or other Sentinel products not listed herein please refer to the Sentinel 880 Series Source Projector Operation and Maintenance Manual or the original product Operations Manual.

Daily Inspection of the Radiography System

A daily inspection of the gamma radiography system for obvious defects is essential.
The daily inspection ensures that the equipment is in a safe and proper operating condition.
It is important that all radiographers perform or supervise this inspection prior to the first radiographic exposure of the shift regardless of any previous inspections that may have been performed that day. As an example, damage to a component of the system may occur during transport of the equipment to the job site. If damaged equipment were used without detection, the result may be the inability to retract the source assembly into the exposure device and secure it.
The result of a daily inspection should be recorded and include the date, name of the inspector and what specific equipment was inspected. If any defective or damaged components are discovered during daily inspection, the component must be removed from service and identified with a status indicator (tag, label, tape) to prevent inadvertent use by other radiography personnel.. Defective or damaged components must be repaired or replaced before reuse in radiography operations. The main components of the radiography system consisting of the radiographic exposure device, remote controls, source guide tubes must be inspected in addition to accessories such as lab stands, collimators, jigs, j-tubes, and pipe clamping apparatus.
Radiographers must take a proactive roll in preventing incidents, by performing or directly supervising a simple but thorough daily inspection of the radiography system. The implications that effect safety and the importance of the daily inspection must be emphasized and understood by the entire radiography staff.

Daily Inspection of the PipeLiner Accessory

1. Before starting any inspection, survey the surface of the exposure device to ensure that the radiation level is less than 2mSv/hr (200mR/hr).This survey provides a function test of the survey instrument, that it is responding to radiation, in addition to providing the radiographer with a reference measurement that can be compared to confirmatory surveys after terminating each radiographic exposure.

2. Inspect the labels on the exposure device to ensure they are legible and securely attached. The warning label containing the trefoil should be legible from a distance of 1 meter (approximately 3 feet). Inspect the legibility and attachment of the source identification tag that describes the radioactive source contained within the exposure device.

3. Check the PipeLiner jacket for cracks and gouges that could pinch or cut hands and fingers or wear damage that could affect the safe operation of the exposure device. Replace or repair as necessary.
It is common for the polyurethane material of the jacket to darken in color over time especially if the jacket is in direct sunlight for long periods. This is natural and will not affect the function of the jacket or the device.
Inspect the wheels for smooth rotation, and the tires for wear, gouges or chunks missing. Replace as needed.

4. Inspect the collimating guide tube for obvious damage. Ensure the guide tube is free of dirt or debris. Check the bayonet fitting for burrs, cracks or dents. If damaged is found to the bayonet fitting the collimating guide tube should be replaced. Ensure the bayonet fitting engages and rotates smoothly into place in the outlet port by installing and removing it. A crunchy or gritty feeling indicates that dirt and/or sand has entered the outlet port mechanism and it must be serviced before use.

5. Inspect the pipe shoe for rough or sharp edges these should be filed smooth to prevent injury. Inspect the feet for excessive wear. The feet of the pipe shoe receives the most wear from contact with the pipe and will eventually wear to a point that the shoe will need to be replaced. Check the apex of the focal opening and of the concave between the feet for cracks. Ensure the indent that houses the collimating guide tube is free of dirt or debris and is sound with no wear through areas, allowing dirt into the collimating guide tube.

6. Inspect the entire swing arm assembly, right and left side plates, for obvious damage or wear and nicks or sharp edges that could cause injury. These can be filed smooth. The over swing arm should operate smoothly, the fulcrum and swing arm posts should be free of bends or burrs.
Check the straps for wear, cuts or abrasions. Check the loops, paying special attention to the inside of the loop where it rubs against the posts. If the straps show obvious fatigue or wear they need to be replaced.
Inspect the operation of the cam buckles, they should open and close smoothly, firmly grasping the strapping.
Check the hook plate and hook plate pin for damage and deformities.

7. During the initial set up of the days work and with the PipeLiner on the pipeline, the following exercise needs to be performed to ensure all components of the PipeLiner accessory are functioning together as intended.
Engage the hook plate onto the hook plate pin, tighten the straps and check to ensure the hook plate cannot be removed from the hook plate pin without releasing the quick release cam buckles first.
Next rotate the entire device 120º away from you and engage the swing arm. Put slight hand pressure on the PipeLiner with the intent of trying to force it further towards the bottom of the pipe. Now rotate the device from the top of the pipeline 120º in a direction towards you and engage the over centering mechanism. Again put slight hand pressure on the PipeLiner with the intent of trying to force it further towards the bottom of the pipe. Return the device to the top of the pipeline. If the device failed to hold sufficiently at any time, retighten the straps and repeat the above tests until the projector is held securly.

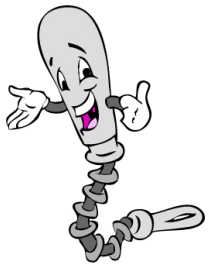

MAINTENANCE
Daily (routine) and annual (complete) maintenance requirements

Radiographic exposure devices and associated equipment must be maintained regularly by trained and qualified personnel to ensure consistent and safe operation of the radiographic system. The routine inspection and maintenance also ensures the integrity of the Type B(U)-85 transport packages are maintained in compliance with the package certification number USA/9296/B(U)-85.

Manufacturers base the recommended inspection and maintenance requirements on the system's design, application, materials, anticipated work cycles, environmental factors of use under the normal and abnormal conditions of industrial radiography and while in the transport system. A program of systematic maintenance will prolong the working life of the radiographic exposure device and associated equipment in addition to ensuring safety during use. By most national regulations, routine maintenance of the systems is required at intervals not to exceed 3 months in addition to the radiographer's daily inspections for obvious defects. The complete annual servicing ensures the integrity of the system.
Maintenance program administrators must recognize the need for maintenance intervals that are less than the required 3 month interval especially in cases where the systems are used in severe environmental conditions. Maintenance program administrators must ensure the systems are completely serviced immediately after certain jobs in severe conditions. Extreme or severe conditions may include, but is not limited to:

- Conditions where the equipment was immersed in water or mud.
- Subjected to high-concentrations of particulate such as fly ash or sand.
- Subjected to hot radiography conditions.
- Subjected to salt-water conditions, caustic or acidic materials.
- Subjected to accidental drops or falling objects.
- Whenever subjected to extreme environmental conditions.

The routine maintenance of the PipeLiner accessory performed daily requires cleaning, inspection and operational checks of the system. The complete maintenance (performed once a year) involves a complete disassembly, cleaning, inspection and operational tests of the entire system.
Equipment maintenance can be performed by trained and qualified individuals within the licensee's organization. AEA Technology QSA service engineers are available to provide maintenance on the systems at the licensee's premises or at on of he service centers.

Routine Daily Maintenance Requirements

At the end of each days use the PipeLiner accessory needs to be cleaned of any obvious debris, mud, dirt, or other foreign material. Use a soft wire brush or stiff bristle brush to remove dried mud and to reach tight spaces. Mild detergent and water can be used to remove dirt and grime with a damp rag. Spilled chemicals or other chemical compounds should be removed immediately using proper methods approved for the chemical involved.
NOTE: **Safety glasses** should be worn when using brushes to remove dirt and mud.

Yearly Maintenance Requirements

Once a year the entire system should be dismantled and thoroughly cleaned and inspected. (see inspection portion of this manual)
The PipeLiner uses no lubricants or does it require regular replacement of parts. Simple cleaning and a thorough inspection of all parts including bolts is all that is necessary.

Records

The results of the inspections, repairs and maintenance should be recorded and retained. Reports should contain the name of the person(s) involved, dates, location and should identify the specific equipment that was serviced.

Industrial Radiography Supplies and Services Inc.
14705 116 Avenue, Edmonton Alberta
T5M 3E8
Tel 1 780-452-4761
Fax 1 780-453-5239
www.irss.ca

Sentinel
AEA Technology QSA
6765 Langley Drive, Baton Rouge
Louisiana 70809
USA
Tel +1 (1)225-751-5893
Fax +1 (1)225-756-365
www.aeat-qsa.com

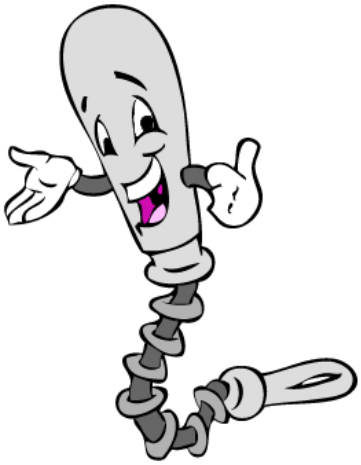

April 4, 2007

Section 8.3 Profile Reports

QSA GLOBAL

SHIELDING PROFILE AND INSPECTION FORM (SPIF) F-Q-1806-2

Re-Profile Drop Test unit (TP186A)

Sheet 1 of 1

Shield Data

Model: 880 Delta	Serial # 5520	Radionuclide: Ir-192	Max. Capacity 150 Ci
Shield P/N: 88001	Shield Heat # 866-D48	Lot # 0916900203	

Profile Process Data

Source Model: 424-9	Source Ser. # 60864B	Radionuclide: Ir-192	Activity: 125.2 Ci
Survey Inst. 1 ND-500P	Serial # 42363	Date Cal. 8/18/09	Date Due: 8/18/10
Survey Inst. 2 E600	Serial # 2750	Date Cal. 4/2/09	Date Due: 4/2/10
Inst. Probe: 1 101-03	Serial # P11973	Inst. Probe: 2 HB-270	Serial # 706
Capacity Correction Factor: 1.20			

Location	Measured Dose Rate mR/hr: At Surface	Surface Corr. Factor	At 30 Cm [Note 2]	At One Meter	Adjusted Dose Rate mR/hr: At Surface	At 30 Cm [Note 2]	At One Meter [Note 1]
Top	*	*	NA	.7	*	NA	.8
Right	↓	↓	↓	.7	↓	↓	.8
Front	↓	↓	↓	.7	↓	↓	.8
Left	↓	↓	↓	.8	↓	↓	1.0
Rear	↓	↓	↓	1.2	↓	↓	1.4
Bottom	↓	↓	↓	.7	↓	↓	.8
Acceptance Criteria:					≤200	NA	≤2.0
Result: (Check one)				Accept		Reject	

Inspector: [signature] Date: 4/10/10 NCR # _____

Comments:

* Refer to Auto-Profiler Printout for Data
(1 meter used E600, 3055, Cal due 8/28/10)

Notes:

1. Refer to F-Q-1806-1, Shield Efficiency Testing Surface Correction Factors for an existing device model, or F-Q-1806-3, Shield Profile Worksheet for One meter acceptance limit.
2. The 30cm readings are only required when specifically requested.
3. Additional sheets may be used to describe results or indicate reading locations using sketches. Number all sheets and indicate total number of sheets. Make sure shield Identification is included on each sheet.
4. Attach auto profiler print out to this sheet if used.

QSA GLOBAL

880 Shielding Profile and Inspection Form (SPIF) F-Q-1806-4 Delta & Sigma

(TP186A)

Sheet 1 of 1

Shield Data

Model: 880D/S	Serial # 5520	Radionuclide: Ir192	150 Ci Capacity Correction Factor: 1.32
	Shield Heat # 866-D48	Lot # D9168D0203	130 Ci Capacity Correction Factor: 1.15

Profile Process Data

Source Model	424-9	Source Ser.# 53962B	Radionuclide: Ir192	Activity (Ci)	113.4	Acceptance Criteria		
Instrument	ND-500P	Serial # 42363	Date Cal. 4/7/09	Date Due:	4/7/10	At Surface < or =	200	mr/hr
	E-600	Serial # 2578	Date Cal. 12/8/08	Date Due:	12/8/09	At One Meter < or =	2	mr/hr

Measured Dose Rate mR/hr			Surface Corr. Factors			880 Delta Adj. Dose Rate mR/hr			880 Sigma Adj. Dose Rate mR/hr		
Location	At Surface	At One Meter	Auto Profiler	ND-500P *	E-600 *	ND-500P	E-600	At One Meter	ND-500P	E-600	At One Meter
Top	*	.7	1.17	1.18	1.28	NA	NA	.9	NA	NA	NA
Right		.7	1.17	1.18	1.28			.9			
Front		.6	1.17	1.08	1.13			.8			
Left		.7	1.17	1.18	1.28			.9			
Rear		1.0	1.17	1.07	1.11			1.3			
Bottom		.8	1.17	1.18	1.28			1.1			

Result: (Check One)	Accept as:	880 Delta	✓	880 Sigma		Reject	
		Shield P/N	88001		88040	NCR #	

Inspector: [signature] Date: 7 JUL 09 Reviewer: [signature] Date: 9 Jul 09

Comments:

* ND-500P and E-600 results are for manual profiles only. Refer to auto-profiler print out for data if blank.

1 meter performed with E600, SN 1863, cal 2/24/09, due 2/24/10

Notes: Additional sheets may be used to describe results or indicate reading locations using sketches. Number all sheets and indicate total number of sheets. Make sure shield identification is included on each sheet.

QSA GLOBAL

SHIELDING PROFILE AND INSPECTION FORM (SPIF)
F-Q-1806-2

Re-Profile Drop Test Unit (TP186B) Sheet 1 of 1

Shield Data			
Model: 880 Delta	Serial # D5523	Radionuclide: Ir-192	Max. Capacity 150 Ci
Shield P/N: 88001	Shield Heat # 866-D40		Lot # 0916900203

Profile Process Data			
Source Model: 424-9	Source Ser. # 60865B	Radionuclide: Ir-192	Activity: 117.2 Ci
Survey Inst. 1 ND-500P	Serial # 42363	Date Cal. 8/18/05	Date Due: 8/18/10
Survey Inst. 2 E600	Serial # 2750	Date Cal. 4/2/05	Date Due: 4/2/10
Inst. Probe: 1 101-03	Serial # P11973	Inst. Probe: 2 HB-270	Serial # 706
Capacity Correction Factor: 1.28			

Location	Measured Dose Rate mR/hr: At Surface	Surface Corr. Factor	At 30 Cm [Note 2]	At One Meter	Adjusted Dose Rate mR/hr: At Surface	At 30 Cm [Note 2]	At One Meter [Note 1]
Top	*	*	NA	.6	*	NA	.8
Right	↓	↓	↓	.6	↓	↓	.8
Front	↓	↓	↓	.6	↓	↓	.8
Left	↓	↓	↓	.6	↓	↓	.8
Rear	↓	↓	↓	.9	↓	↓	1.2
Bottom	↓	↓	↓	.6	↓	↓	.8
Acceptance Criteria:					≤ 200	NA	≤ 2.0
Result: (Check one)				Accept		Reject	

Inspector: [signature] Date: 4/10/10 NCR # _____

Comments:

* Refer to Auto Profiler printout for Data
(meter used E600, 3055, cal due 8/28/10)(meter purchased on 4/10/10, activity = 116.1
CCF = 1.29

Notes:

1. Refer to F-Q-1806-1, Shield Efficiency Testing Surface Correction Factors for an existing device model, or F-Q-1806-3, Shield Profile Worksheet forOne meter acceptance limit.
2. The 30cm readings are only required when specifically requested.
3. Additional sheets may be used to describe results or indicate reading locations using sketches. Number all sheets and indicate total number of sheets. Make sure shield Identification is included on each sheet.
4. Attach auto profiler print out to this sheet if used.

QSA GLOBAL

880 Shielding Profile and Inspection Form (SPIF) F-Q-1806-4 Delta & Sigma

(TP186B)

Sheet 1 of 1

Shield Data

Model:	880D/S	Serial # 5523	Radionuclide: Ir192	150 Ci Capacity Correction Factor:	1.25
		Shield Heat # B66 D40	Lot # 09169002 03	130 Ci Capacity Correction Factor:	1.08

Profile Process Data

Source Model	424-9	Source Ser.# 539625	Radionuclide: Ir192	Activity (Ci)	119.9	Acceptance Criteria		
Instrument	ND-500P	Serial # 42363	Date Cal. 4/7/08	Date Due:	4/7/10	At Surface < or =	200	mr/hr
	E-600	Serial # 2578	Date Cal. 12/8/08	Date Due:	12/8/09	At One Meter < or =	2	mr/hr

Measured Dose Rate mR/hr			Surface Corr. Factors			880 Delta Adj. Dose Rate mR/hr			880 Sigma Adj. Dose Rate mR/hr		
Location	At Surface	At One Meter	Auto Profiler	ND-500P *	E-600 *	ND-500P *	E-600 *	At One Meter	ND-500P *	E-600 *	At One Meter
Top	*	.5	1.17	1.18	1.28	NA	NA	.6	NA	NA	NA
Right		.6	1.17	1.18	1.28			.8			
Front		.6	1.17	1.08	1.13			.8			
Left		.6	1.17	1.18	1.28			.8			
Rear		.9	1.17	1.07	1.11			1.1			
Bottom		.6	1.17	1.18	1.28			.8			

Result: (Check One)	Accept as:	880 Delta	✓	880 Sigma		Reject	
		Shield P/N	88001		88040	NCR #	

Inspector: [signature] Date: 7/1/09 Reviewer: C. [signature] Date: 9/6/09

Comments:

* ND-500P and E-600 results are for manual profiles only. Refer to auto-profiler print out for data if blank.

1 meter performed with E600, SN 1863, cal 2/24/09, due 2/24/10

Notes: Additional sheets may be used to describe results or indicate reading locations using sketches. Number all sheets and indicate total number of sheets. Make sure shield identification is included on each sheet.

QSA GLOB

Sheet 1 of 1

Inspection Instruction And Record	Originator/Date Tom Shea 14 Aug 09	Rev. B	Part No. T10740	Reg. Approval/Date C. Keughan 20 Aug 09
	QA Approval/Date: [illegible] 21 Aug 09	CM. NA	P/L NA	Eng. Approval/Date TSR 14 Aug 09

Item Description 8 X 8 DROP PAD-BURLINGTON

Characteristics	Tolerance	MTE	AQL	1	2	3	4	5	6	7	8	9
General Visual	NA	Visual	C/100%	~~0~~ / 1	REF / 150568							
Cracks in Concrete	NA	Note & Photograph	C/100%	~~0~~ / 1	N/A							
1/2-13 threaded hole, four (4) places	Go/NoGo	Thread Gage	C/100%	1 / ~~0~~	0 / 1							
Pitch of Slab 1/2, N-S Corners	+/-1/4	Level & Scale	C/100%	~~0~~ / 1	N/A							
Surface Condition of Steel Plate	NA	Note & Photograph	C/100%	~~0~~ / 1	N/A							

Comments:			
Calibration: Re-Inspect Prior to use. Inspection to be valid 60 days only !	PO / WO #	N/A	N/A
	Traveler	N/A	N/A
	Lot / Serial #	001	001
	Lot Qty.	1	1
	Qty. Rej / NCR	RWK / 150568	0 / N/A
	Qty. Acc.	0	1
F-Q1807-1, rev	Insp / Date	JV / 15AUG09	MD / 3SEP 09

AEATECHNOLOGY QSA

PERIODIC MAINTENANCE

Sheet 1 of 1

Inspection Instruction And Record	Originator/Date	Rev C	Part No. T10143	Supplier ENGINEERING
	QA Approval/Date 13 Sept 01	CM NA	PIL NA	Eng. Approval/Date 19 SEPT 01

Item Description: Puncture Test Billet

Characteristics	Tolerance	MTE	AQL	1	2	3	4	5	6	7	8	9
General Visual	N/A	N/A	C / 100%	~~0~~ / 1	~~0~~ / 1							
Securely Mounts to Drop Test Pad	N/A	N/A	C / 100%	~~0~~ / 1	~~0~~ / 1							
Comments		Due Date		19 Sept 02	07 JULY 2010							
		Freq / Days		365 / Days	365 / DAYS							
		Serial #		01	01							
		Lot Qty.		1	1							
		Qty. Rej / NCR		~~0~~ / NA	~~0~~ / NA							
		Qty. Acc.		1	1							
		Insp / Date		19 Sept 01	JU / 07JUL09							

F-Q1807-1, rev. 0

IIR Page 1

S/N: T-198776

ESSCO CALIBRATION LABORATORY
DIVISION OF WALSH ENGINEERING SERVICES, INC.
CALIBRATION/REPAIR OF ALL TYPES OF ELECTRONIC / MECHANICAL TEST EQUIPMENT
27 INDUSTRIAL AVE, CHELMSFORD, MA 01824-4102
TEL: (800) 325-2201 (978) 250-0880 www.esscolab.com

ISSUE DATE: 2/22/2010

CERTIFICATE OF CALIBRATION

Certificate #: 296477

BARCODE: 1030907

CUSTOMER / LOCATION	EQUIPMENT INFORMATION
QSA GLOBAL INC	
40 NORTH AVENUE	MANUFACTURER: OMEGA
BURLINGTON MA 01803	MODEL NO: CL23A
	SERIAL NO: T-198776
DEPT:	CONTROL NO: ENG-20
PURCHASE ORDER: P32150	TYPE: CALIBRATOR

CONDITION RECEIVED	CONDITION RETURNED
IN TOLERANCE	IN TOLERANCE

METHOD / ENVIRONMENT		CALIBRATION	
PERFORMED:	IN LAB	CALIBRATION DATE:	2/22/2010
TEMPERATURE (deg C):	23	CALIBRATION DUE:	2/22/2011
RELATIVE HUMIDITY (%RH):	21		
METHOD:	OMEGA CL23A/24/25/26	METROLOGIST:	Joseph D. Friedman

E1540	KAYE K140-4 ICE POINT REFERENCE	178302	5/15/2009	5/14/2010
E2483	FLUKE 8508A REFERENCE MULTIMETER	257701	5/27/2009	4/27/2010
E706	FLUKE 5700A\03 CALIBRATOR	276832	1/7/2010	4/7/2010

JK

The ESSCO Quality System is certified to ISO 9001:2008

The results above relate only to the item(s) calibrated. Unless otherwise stated, a minimum TUR of 4:1 was used.

This certifies that the unit conformed to applicable specifications upon successful completion of the calibration. The standards used are traceable to NIST or a National Measurement Institute. This certificate shall not be reproduced, except in full, without written approval of ESSCO.

The signature to the right signifies responsibility for the quality system.

This calibration was performed in compliance with the ESSCO Quality Manual, ECL 1, Rev. 26, 29 September 2009, and complies with ISO 9001:2008, ANSI/NCSL Z540-1, QS9000 (exp), MIL-STD-45662A (exp), ISO 10012:2003, 10CFR21, and the calibration requirements of ISO 13485.

Kevin R. Pisley
Quality Assurance Manager

1	1 MTR IN K 0.000 mV	32.0	32.5 31.5	DEG F	31.9	31.9	+/- 0.5 DEG F
2	2 MTR IN K 54.856 mV	2500.0	2502.0 2498.0	DEG F	2500.4	2500.4	+/- 2.0 DEG F
3	3 MTR IN J 0.000 mV	32.0	32.5 31.5	DEG F	31.7	31.7	+/- 0.5 DEG F
4	4 MTR IN T 0.000 mV	32.0	32.5 31.5	DEG F	31.7	31.7	+/- 0.5 DEG F
5	5 CAL OUT K 32.0 F	0.000	0.011 -0.011	mV	0.008	0.008	+/- 0.011 mV
6	6 CAL OUT K 2500.0F	54.856	54.894 54.818	mV	54.867	54.867	+/- 0.038 mV
7	7 CAL OUT J 32.0 F	0.000	0.014 -0.014	mV	0.012	0.012	+/- 0.014 mV
8	8 CAL OUT T 32.0 F	0.000	0.011 -0.011	mV	0.007	0.007	+/- 0.011 mV

End of Data
Note: A = Adjusted F = Failed L = Limited

Hunt Metrology Service, Inc.
121 Ferry Street
Lawrence, MA 01841
(978) 688-7278
(978) 794-4632
Hmsi@verizon.net

Calibration Certificate

HMSCC-22922-12-P Total Pages: 15

Tech: Paul Rabs

QSA Global
40 North Avenue
Burlington, MA 01803

Purchase Order No: P31363-00
Date Cal: September 24, 2009 Due: September 24, 2010

The calibration performed on the following measuring and test equipment (M&TE) of this document is traceable to the National Institute of Standards and Technology (N.I.S.T.) through N.I.S.T. number 821/276493-08; Certificate number 09-69006A dated May 29, 2009 for dimensional calibration.

The M&TE have been cleaned and lubricated, as needed. Our technician(s) have calibrated, adjusted and/or reset the M&TE, affixed a calibration label to the M&TE, updated the corresponding record(s), and provided this calibration certificate. The standard(s) utilized to perform the calibration have been calibrated, certified and maintained in our laboratory which sustains a temperature of 68 degrees (+/-2ø) and less than 50% relative humidity. All records pertaining to our standards, and the masters utilized to calibrate them, are kept on file in our laboratory for a period of no less than 3 years. The services provided, traceability to the N.I.S.T., and Hunt Metrology Service's calibration system comply with the requirements of ANSI/NCSL Z540-1-1994, ISO 10012-1:1002 (E) and ISO/IEC 17025. The reported value is both "as found" and "as left" data, unless otherwise specified. A calibration uncertainty ratio of at least 4:1 is maintained unless otherwise stated. This calibration certificate cannot, in any way, be reproduced, except in full, without prior written consent from a representative of Hunt Metrology Service, Inc.

David Dickinson, President

Hunt Metrology Service, Inc. Data Sheet

HMSCC-22922-12-P

Customer: QSA GLOBAL

P.O. No.: P31363-00
Date Cal: 09/24/09
Date Due: 09/24/10
Technician: PR
Cal Proc. No: 01

ID No: 411
2 ID No:
Department:
Deviation u:
Accuracy: +/-4%
Accuracy:
Temperature: 73.7°
Humidity: 52%

Manufacturer: O'HAUS
Serial No: 0009986-6CE
Model No: CD11ZE0
Standard No: 018 Cal: 03/31/09 Due: 03/31/10
Standard No: 057 Cal: 03/31/09 Due: 03/31/10
Standard No: Cal: Due:

Gage Type: 0-130lb DIGITAL SCALE

REQUIRED	DEVIATION	ACTUAL
0.500	0.00	0.50
1.000	0.00	1.00
2.000	0.00	2.00
5.000	0.00	5.00
10.000	0.00	10.00
20.000	0.00	20.00
30.000	+0.02	30.02
40.000	+0.02	40.02
50.000	+0.02	50.02
60.000	+0.04	60.04
80.000	+0.04	80.04
100.000	+0.04	100.04
120.000	+0.08	120.08

2.12.12 USDOT Special Form Certificate USA/0392/S-96 Rev 10

U.S. Department
of Transportation

**Pipeline and
Hazardous Materials
Safety Administration**

East Building, PHH-23
1200 New Jersey Avenue SE
Washington, D.C. 20590

IAEA CERTIFICATE OF COMPETENT AUTHORITY SPECIAL FORM RADIOACTIVE MATERIALS CERTIFICATE USA/0392/S-96, REVISION 10

This certifies that the source described has been demonstrated to meet the regulatory requirements for special form radioactive material as prescribed in the regulations of the International Atomic Energy Agency[1] and the United States of America[2] for the transport of radioactive material.

1. Source Identification - QSA Global, Inc. Model 875 Capsule.

2. Source Description - Cylindrical single encapsulation made of Type 304 or 304L stainless steel and tungsten inert gas or laser welded. Approximate exterior dimensions are 5.2 mm (0.205 in.) in diameter and 7.84 mm (0.309 in.) in length. Inside dimensions vary, but minimum wall thickness is 0.482 mm (0.019 in.). Construction shall be in accordance with attached QSA Global, Inc. Drawing No. R875 INNER, Rev. C.

3. Radioactive Contents - No more than either 8.9 TBq (240.0 Ci) of Cobalt-60 or 14.8 TBq (400.0 Ci) of Iridium-192 in the form of metallic wafers or pellets.

4. Quality Assurance - Records of Quality Assurance activities required by Paragraph 310 of the IAEA regulations[1] shall be maintained and made available to the authorized officials for at least three years after the last shipment authorized by this certificate. Consignors in the United States exporting shipments under this certificate shall satisfy the applicable requirements of Subpart H of 10 CFR 71.

5. Expiration Date - This certificate expires on April 30, 2013. On June 30, 2009, this certificate supersedes all previous revisions of USA/0392/S-96.

---

[1] "Regulations for the Safe Transport of Radioactive Material, 1996 Edition (Revised), No. TS-R-1 (ST-1, Revised)," published by the International Atomic Energy Agency(IAEA), Vienna, Austria.

[2] Title 49, Code of Federal Regulations, Parts 100-199, United States of America.

CERTIFICATE USA/0392/S-96, REVISION 10

This certificate is issued in accordance with paragraph 804 of the IAEA Regulations and Section 173.476 of Title 49 of the Code of Federal Regulations, in response to the April 07, 2009 petition by QSA Global, Inc., Burlington, MA, and in consideration of other information on file in this Office.

Certified By:

Apr 08 2009

Robert A. Richard (DATE)
Deputy Associate Administrator for Hazardous Materials Safety

Revision 10 - Issued to increase the allowed Ir-192 activity.

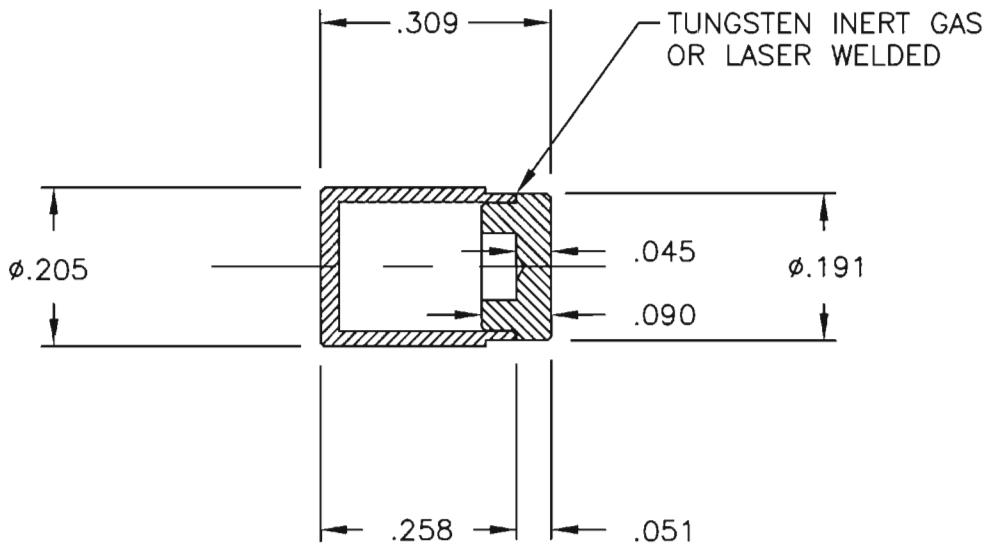

NOTES:

1. MATERIAL: 304L STAINLESS STEEL.
2. INTERNAL VOID VOLUME TO BE 0.010 mL OR GREATER.
3. INNER CAVITY DIMENSIONS MAY VARY. METALLIC SPACERS, SPRINGS AND GUARDS WHICH SECURE AND/OR LOCATE THE RADIOACTIVE MATERIAL WITHIN THE CAPSULE MAY BE USED.
4. MINIMUM WALL THICKNESS TO BE 0.019.

APPROVALS	DATE
[illegible]	25 Jul 07
[illegible]	25 Jul 07

UNLESS OTHERWISE SPECIFIED
DIMENSIONS IN INCHES
TOLERANCES:
FRACTIONS ± 1/8
X.X ± 0.12
X.XX ± 0.06
X.XXX ± 0.020

QSA GLOBAL
40 NORTH AVE, BURLINGTON, MA 01803

DESCRIPTIVE DRAWING

TITLE 875 SERIES INNER CAPSULE

SIZE A | DWG. NO. R875 INNER | REV C

SCALE: NONE | SHEET 1 OF 1

ERF # 1739

2.12.13 USDOT Special Form Certificate USA/0335/S-96 Rev 9

U.S. Department of Transportation

Pipeline and Hazardous Materials Safety Administration

IAEA CERTIFICATE OF COMPETENT AUTHORITY
SPECIAL FORM RADIOACTIVE MATERIALS
CERTIFICATE USA/0335/S-96, REVISION 9

East Building, PHH-23
1200 New Jersey Avenue SE
Washington, D.C. 20590

This certifies that the sources described have been demonstrated to meet the regulatory requirements for special form radioactive material as prescribed in the regulations of the International Atomic Energy Agency[1] and United States of America[2] for the transport of radioactive material.

1. Source Identification - QSA Global, Inc. Model 875 Series.

2. Source Description - Cylindrical single or double encapsulations with the outer capsule made of Type 304L stainless steel and tungsten inert gas or laser welded. Approximate outer dimensions are 6.35 mm (0.25 in.) in diameter and either 19.05 mm (0.75 in.) or 24.2 mm (0.954 in.) in length. Inner capsules, when present, are made of stainless steel or titanium. Construction of the outer capsule shall be in accordance with attached QSA Global, Inc. Drawing No. R875 OUTER, Rev. C. Construction of any inner capsule shall be in accordance with attached QSA Global, Inc. Drawing No. R875 INNER, Rev. C or QSA Global, Inc. Drawing No. R87527-40, Rev. A.

3. Radioactive Contents - No more than either 14.8 TBq (400 Ci) of Iridium-192 as a solid metal; 8.14 TBq (220 Ci) of Cobalt-60 as a solid metal; 5.56 TBq (150 Ci) of Selenium-75 as an encapsulated solid metal; 1.11 TBq (30 Ci) of Cesium-137 as encapsulated $CsCl_2$; 1.85 TBq (50 Ci) of Thulium-170 as Tm_2O_3; or 7.4 TBq (200 Ci) of Ytterbium-169 as Yb_2O_3.

4. Quality Assurance - Records of Quality Assurance activities required by Paragraph 310 of the IAEA regulations[1] shall be maintained and made available to the authorized officials for at least three years after the last shipment authorized by this certificate. Consignors in the United States exporting shipments under this certificate shall satisfy the requirements of Subpart H of 10 CFR 71.

5. Expiration Date - This certificate expires on August 31, 2012. On June 30, 2009, this certificate supersedes all previous revisions of USA/0335/S-96.

---

[1] "Regulations for the Safe Transport of Radioactive Material, 1996 Edition (Revised), No. TS-R-1 (ST-1, Revised)," published by the International Atomic Energy Agency (IAEA), Vienna, Austria.

[2] Title 49, Code of Federal Regulations, Parts 100 - 199, United States of America.

CERTIFICATE USA/0335/S-96, REVISION 9

This certificate is issued in accordance with paragraph 804 of the IAEA Regulations and Section 173.476 of Title 49 of the Code of Federal Regulations, in response to the April 7, 2009 petition by QSA Global, Inc., Burlington, MA and in consideration of other information on file in this Office.

Certified by

APR - 7 2009

Robert A. Richard (DATE)
for Deputy Associate Administrator for Hazardous Materials Safety

Revision 9 - Issued to increase the allowed Iridium-192 activity.

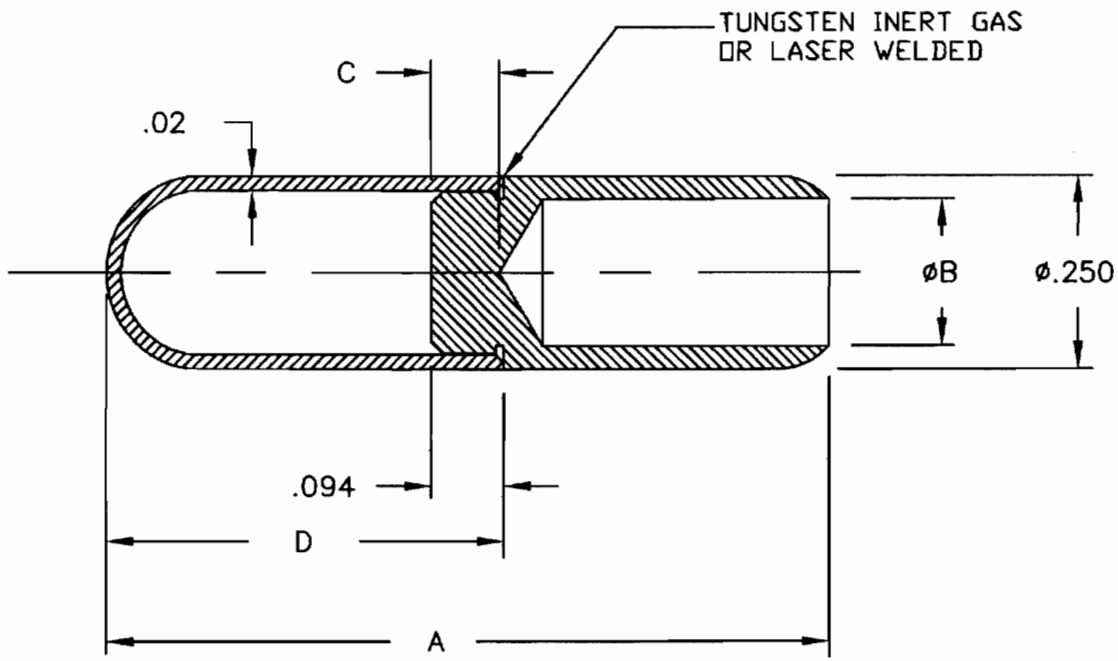

CAPSULE NO.	A	øB	C	D
87501	.954	.190	.150	.522
88702	.750	.190	.118	.522

NOTES:

1. INTERNAL VOID TO BE 0.010 mL OR GREATER.
2. MATERIAL: 304L STAINLESS STEEL.

APPROVALS	DATE
[illegible]	7-27-07
[illegible]	27 Jul 07

UNLESS OTHERWISE SPECIFIED
DIMENSIONS IN INCHES
TOLERANCES:
FRACTIONS ± 1/8
X.X ± 0.12
X.XX ± 0.06
X.XXX ± 0.020

QSA GLOBAL
40 NORTH AVE, BURLINGTON, MA 01803

DESCRIPTIVE DRAWING

TITLE 875 SERIES SSDR OUTER CAPSULE

SIZE A | DWG. NO. R875 OUTER | REV C

SCALE: NONE | SHEET 1 OF 1

ERF # 1739

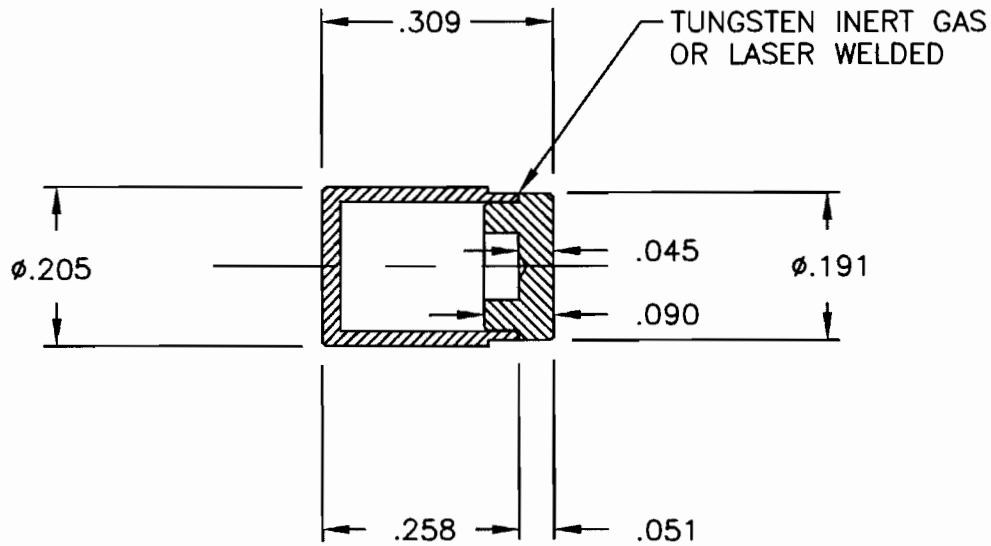

NOTES:

1. MATERIAL: 304L STAINLESS STEEL.
2. INTERNAL VOID VOLUME TO BE 0.010 mL OR GREATER.
3. INNER CAVITY DIMENSIONS MAY VARY. METALLIC SPACERS, SPRINGS AND GUARDS WHICH SECURE AND/OR LOCATE THE RADIOACTIVE MATERIAL WITHIN THE CAPSULE MAY BE USED.
4. MINIMUM WALL THICKNESS TO BE 0.019.

APPROVALS	DATE
[illegible]	25 Jul 07
[illegible]	25 Jul 07

UNLESS OTHERWISE SPECIFIED
DIMENSIONS IN INCHES
TOLERANCES:
FRACTIONS ± 1/8
X.X ± 0.12
X.XX ± 0.06
X.XXX ± 0.020

QSA GLOBAL
40 NORTH AVE, BURLINGTON, MA 01803

DESCRIPTIVE DRAWING

TITLE 875 SERIES INNER CAPSULE

SIZE	DWG. NO.	REV
A	R875 INNER	C
	SCALE: NONE / SHEET 1 OF 1	

ERF #	1739

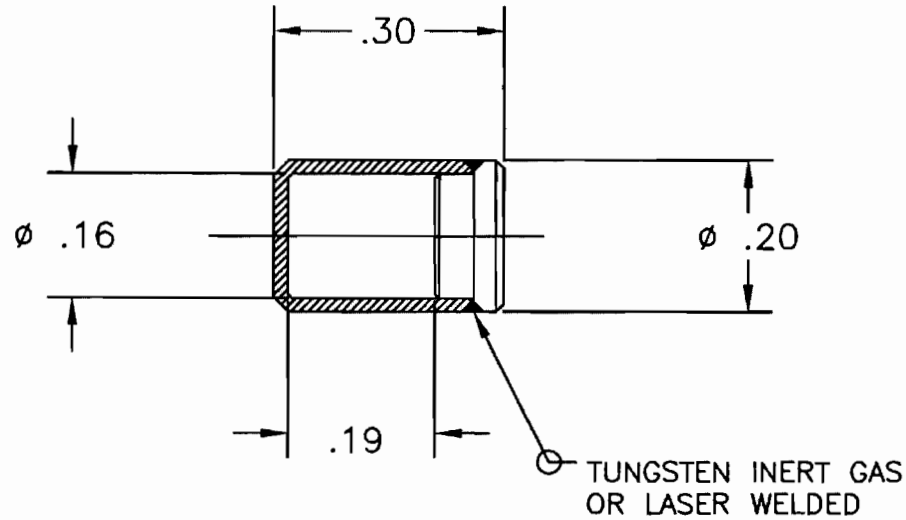

NOTES:

1. MATERIAL: 316L STAINLESS STEEL OR EQUIVALENT, OPTIONAL MATERIAL: COMMERCIALLY PURE TITANIUM, GRADE 4.
2. INNER CAVITY DIMENSIONS MAY VARY. METALLIC SPACERS, SPRINGS AND GAURDS WHICH SECURE AND/OR LOCATE THE RADIOACTIVE MATERIAL WITHIN THE CAPSULE MAY BE USED.
3. MINIMUM WALL THICKNESS TO BE 0.009.

APPROVALS	DATE
	7-24-07
	24 Jul 07

UNLESS OTHERWISE SPECIFIED
DIMENSIONS IN INCHES
TOLERANCES:
FRACTIONS ± 1/8
X.X ± 0.12
X.XX ± 0.06
X.XXX ± 0.020

QSA GLOBAL
40 NORTH AVE, BURLINGTON, MA 01803

DESCRIPTIVE DRAWING

TITLE X540N CAPSULE ASSEMBLY

SIZE	DWG. NO.	REV
A	R87527-40	A
	SCALE: NONE	SHEET 1 OF 1

ERF #	1739

2.12.14 USDOT Special Form Certificate USA/0502/S-96 Rev 7

U.S. Department
of Transportation

**Pipeline and
Hazardous Materials
Safety Administration**

East Building, PHH-23
1200 New Jersey Avenue SE
Washington, D.C. 20590

**IAEA CERTIFICATE OF COMPETENT AUTHORITY
SPECIAL FORM RADIOACTIVE MATERIALS
CERTIFICATE USA/0502/S-96, REVISION 7**

This certifies that the sources described have been demonstrated to meet the regulatory requirements for special form radioactive material as prescribed in the regulations of the International Atomic Energy Agency[1] and the United States of America[2] for the transport of radioactive material.

1. Source Identification - QSA Global, Inc. Model Nos. X54 (Manufactured before January 1, 1998), X540 (Manufactured on or after February 17, 1981), and X540/1 (Manufactured on or after September 27, 2000).

2. Source Description - Tungsten inert gas or laser seal welded cylindrical single or double encapsulations. The outer encapsulation is made of titanium or stainless steel and the inner encapsulation, if used, is made of titanium, stainless steel, or aluminum. Approximate exterior dimensions are 5.15 mm (0.2 in.) maximum diameter and 15.15 mm (0.6 in.) in length (Model X54); and 5.16 mm (0.2 in.) in diameter and 7.65 mm (0.3 in.) in length (Models X540 and X540/1). Construction shall be in accordance with attached Amersham Drawing No. A10639, Issue C (Model X54) or QSA Global Inc. Drawing No. R87527, Rev. G (Models X540 and X540/1).

3. Radioactive Contents - No more than 17.0 TBq (459.5 Ci) of Cobalt-60 (Model X54); or no more than either 20.0 TBq (540.5 Ci) of Cobalt-60, 17.0 TBq (459.5 Ci) of Iridium-192, or 5.56 TBq (150.3 Ci) of Selenium-75 (Models X540 and X540/1). The Co-60, Ir-192, and Se-75 are in the form of a metal.

4. Quality Assurance - Records of Quality Assurance activities required by Paragraph 310 of the IAEA regulations[1] shall be maintained and made available to the authorized officials for at least three years after the last shipment authorized by this certificate. Consignors in the United States exporting shipments under this certificate shall satisfy the applicable requirements of Subpart H of 10 CFR 71.

5. Expiration Date - This certificate expires on October 31, 2012.

---

[1] "Regulations for the Safe Transport of Radioactive Material, 1996 Edition (Revised), No. TS-R-1 (ST-1, Revised)," published by the International Atomic Energy Agency(IAEA), Vienna, Austria.

[2] Title 49, Code of Federal Regulations, Parts 100-199, United States of America.

CERTIFICATE USA/0502/S-96, REVISION 7

This certificate is issued in accordance with paragraph 804 of the IAEA Regulations and Section 173.476 of Title 49 of the Code of Federal Regulations, in response to the October 11, 2007 petition by QSA Global, Inc., Burlington, MA, and in consideration of other information on file in this Office.

Certified By:

Oct 16 2007

Robert A. Richard (DATE)
Deputy Associate Administrator for Hazardous Materials Safety

Revision 7 - Issued to extend the expiration date.

DRG NO. A10639

Item	Description	Material	Drawing No.	No.off
1	BODY	STAIN.STL.	A10636 ITEM.1	1
2	PLUG	STAIN.STL.	A10638	1
3	ACTIVE MATERIAL			—

FOR ENGRAVING DETAIL
SEE DRAWING A62615

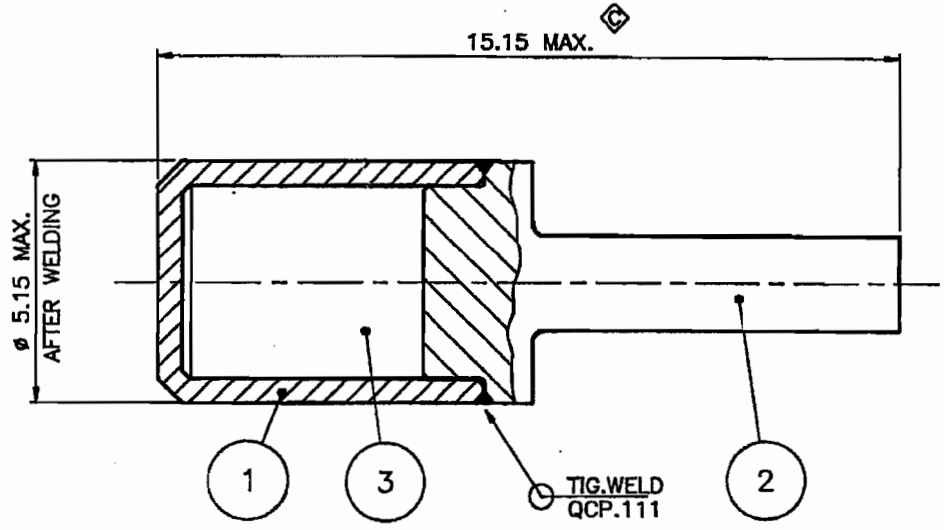

ACTUAL SIZE

TOLERANCES	MATERIAL	GENERAL NOTES	SCALE	C	MS1211	4.1.95	M.A.			
— UNLESS OTHERWISE STATED	—	THIRD ANGLE PROJECTION MODIFICATIONS INDICATED BY ISSUE IN ◇ THIS DRAWING CONFORMS TO BS308. ALL DIMENSIONS IN MILLIMETRES UNLESS OTHERWISE STATED. DO NOT SCALE	10:1	ISSUE	MOD No.	DATE	DRAWN	CHECKED	APPROVED	QA APPROVED
SURFACE TEXTURE	FINISH									
— UNLESS OTHERWISE STATED	— REMOVE ALL BURRS	APPROVAL THIS DRAWING IS NOT TOO BE USED FOR ANY PURPOSE UNLESS SIGNED AS APPROVED	USED ON —	SHT. SIZE A3	DRG NO. A10639				SHT 1 OF SHTS 1	

THIS DOCUMENT INCLUDING THE COPYRIGHT THEREIN IS THE EXCLUSIVE PROPERTY OF AMERSHAM INTERNATIONAL PLC, AMERSHAM UK. IT MAY ONLY BE USED FOR THE PURPOSE FOR WHICH IT WAS ISSUED. IT MAY NOT BE DUPLICATED IN ANY WAY, NOR TRANSMITTED TO ANY THIRD PARTY WITHOUT THE EXPRESS PERMISSION OF AMERSHAM INTERNATIONAL PLC.

Amersham
The Health Science Group

TITLE ASSEMBLY OF CAPSULE X54

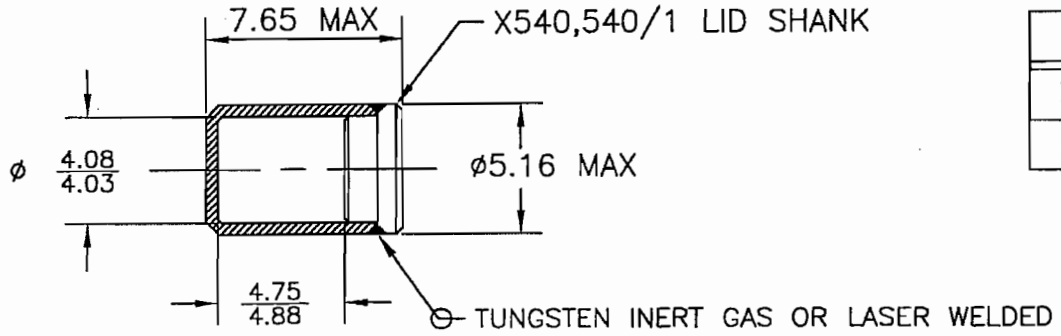

MODEL	MATERIAL
X540	316L STAINLESS STEEL
X540/1	TITANIUM

NOTES:

1. INTERNAL VOID TO BE 0.010 mL OR GREATER.
2. MATERIAL: SEE TABLE
3. INNER CAVITY DIMENSIONS MAY VARY. METALLIC SPACERS, SPRINGS AND GUARDS WHICH SECURE AND/OR LOCATE THE RADIOACTIVE MATERIAL OR INNER SOURCE CAPSULE WITHIN THE CAPSULE MAY BE USED.
4. MINIMUM WALL THICKNESS TO BE 0.22.
5. DIMENSIONS ARE IN MILLIMETERS

NOTES:
1. MATERIAL: SEE TABLE

APPROVALS	DATE
D. Price	30 May 06
[illegible]	30 May 06

UNLESS OTHERWISE SPECIFIED
DIMENSIONS IN INCHES
TOLERANCES:
FRACTIONS ± 1/8
X.X ± 0.12
X.XX ± 0.06
X.XXX ± 0.020

QSA GLOBAL
40 NORTH AVE, BURLINGTON, MA 01803

DESCRIPTIVE DRAWING

TITLE X540 CAPSULE SERIES

SIZE A | DWG. NO. R87527 | REV G

SCALE: NONE | SHEET 1 OF 1

ERF # 1402

Section 3 - THERMAL EVALUATION

3.1 Description of Thermal Design

The Model 880 Series transport packages are completely passive thermal devices having no mechanical cooling system or relief valves. The exterior surface finish of the package is light silvery stainless steel having an absorptivity of about 0.44, or a reflectivity of 0.56. Cooling of the package is through free convection and radiation. There are no specific cooling or insulating design features. Pressure relief of the container weldment is only necessary during the thermal test and is provided by the holes in both the rear and front end plates which will vent to atmosphere.

3.1.1 Design Features

The Model 880 Series transport packages are described in Section 1. The thin walls of the steel weldment exhibit almost no thermal gradient. During a fire test, the exterior steel weldment will very quickly heat to a uniform temperature, eliminating stresses induced by thermal differentials within the material. Further, the steel weldment will move and flex easily, thus relieving any thermal expansion stress without rupture.

The containers use depleted uranium shielding. The depleted uranium is fully enclosed in the welded steel structure and endplates which are attached by screws. This construction prevents oxidation by severely limiting oxygen from reaching the depleted uranium shield.

3.1.2 Decay Heat of Contents

The maximum activity for this package is 150 Ci of Ir-192. Accounting for source absorption, this equals a maximum content activity of 345 Ci of Ir-192. The corresponding decay heat generation rate for the content activity is approximately 3 Watts (See Table 1.2.B).

3.1.3 Summary Tables of Temperatures

Table 3.1.A: Summary Table of Temperatures

Temperature Condition	Model 880 Series Package	Comments
Insolation (38°C in full sun)	65.4°C (149.6°F)	Section 3.4.1.1
Decay Heating (38°C in shade)	47°C (117°F)	Section 3.4.1.2
Fire Test During & Maximum Post-Fire Test	800°C (1,472°F)	

3.1.4 Summary Tables of Maximum Pressures

All package components are vented to atmosphere. As such, no pressure will build up in these components under either Normal or Hypothetical Accident conditions. Normal operating conditions will generate negligible pressure differential within the package. The package has the ability to withstand elevated atmospheric pressure because all components, except the special form source, are open to the atmosphere.

Any pressure generated within the special form source is significantly below that which would be generated during the Hypothetical Accident Conditions thermal test, which is shown in Sections 2.7.4.3 and 3.4.1.4 to result in no loss of structural integrity or containment.

Table 3.1.B: Summary Table of Maximum Pressures

Package Configuration	Void Volume in^3	Normal Conditions 88°C (190°F) Pressure Developed	Fire Conditions 800°C (1,472°F) Pressure Developed	Comments
880 Series	0	0 psig	0 psig	

3.2 Material Properties and Component Specifications

3.2.1 Material Properties

Table 3.2.A lists the relevant thermal properties of the important materials in the transport package. The sources referred to in the last column are listed below the table.

Table 3.2.A: Thermal Properties of Principal Transport Package Materials

Material	Density (lb/in^3)	Melting/Combustion Temperature	Thermal Expansion[1]	Source
Depleted Uranium	0.68	1,130°C (2,066°F)	8µin/in°F	Reference #1, p. 6-11 and Reference #2
Steel (nominal)	0.28	1,510°C (2,750°F)	6.3µin/in°F	Reference #1, p. 6-7 and 6-11
Stainless Steel-Type 304L	0.29	1,400-1,450°C (2,550-2,640°F)	9.9µin/in°F	Reference #1, p. 6-11
Tungsten	0.70	3,370°C (6,098°F)	2.4µin/in°F	Reference #1, p. 6-51
Titanium	0.16	1,500 – 1,700°C (2,732 – 3,092°F)	11µm/m°K	Reference #4

[1]Note that the thermal expansions of the materials in this table are temperature dependent.

Resource references:

1. Eugene A. Avallone and Theodore Baumeister III, *Mark's Standard Handbook for Mechanical Engineers, Tenth Edition,* New York: McGraw-Hill, 1996.

2. Lowenstein, Paul. *Industrial Uses of Depleted Uranium*. American Society for Metals. Metals Handbook, Volume 3, Ninth Edition.

3. Metals Handbook. American Society for Metals, 8th Edition.

4. ASM Material Properties Handbook Titanium Alloys, ed. Rodney Boyer, Gerhard Welsch, E.W. Collings, 1994.

3.2.2 Component Specifications

All components are specified and described on the descriptive drawings included in Appendix 1.3.

3.3 General Considerations

3.3.1 Evaluation by Analysis

Evaluations by analysis are described in the section they apply to in this Safety Analysis Report or when applicable in the Test Plans contained in Appendix 2.12.

3.3.2 Evaluation by Test

Evaluations by direct testing are documented in the Test Plans contained in Appendix 2.12 or are described in the section they apply to in this Safety Analysis Report.

3.4 Thermal Evaluation Under Normal Conditions of Transport

3.4.1 Heat and Cold

3.4.1.1 Insolation and Decay Heat

This analysis determines the maximum surface temperature produced by solar heating of the transport package surface in accordance with 10 CFR 71.71(c)(1) and Table XI of IAEA TS-R-1.

The following design analysis calculates the steady state surface temperature of a cylindrical package subjected to insolation and self-heat. The analysis is based on recognized heat transfer theory and specifically, that the total heat input due to the self-heat of the radioactive contents and the insolation energy absorbed must balance the heat loss due to convection and emitted radiation from the package surface.

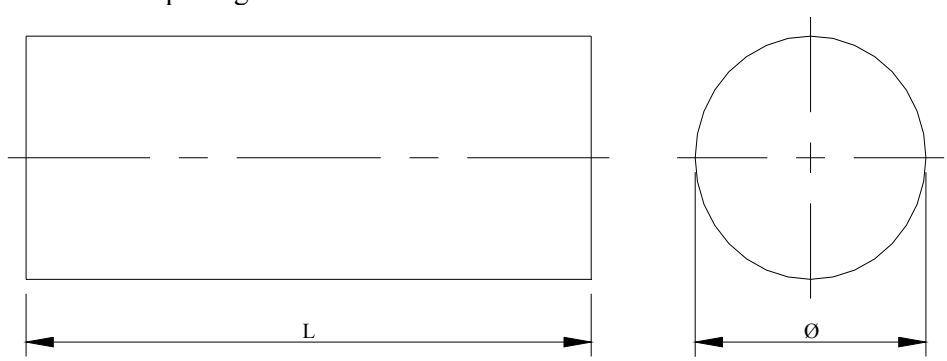

Figure 3.4.A: Model of Cylindrical Package for Heat Analysis

The package is evaluated in the orientation shown in Figure 3.4a, which also defines the overall package dimensions. In order to assure conservatism, the following assumptions are made:

a. Basic Input Parameters:

Max Content Activity, A = 345 Ci of Ir-192 (150 Ci x 2.3 for self absorption)
The surface finish of the package is light silvery grade 304 stainless steel
Length of Package, L = 0.33 m

Diameter of Package, $\phi = 0.127$ m
Stefan-Boltzmann constant, $\sigma = 5.669 \times 10^{-8}$ W/m^{2}K^4
By Kirchhoff's Law Emissivity, ε = Absorptivity, $\alpha = 0.44$
(Ref: Heat Transmission, 3rd Edition - McAdams)
Ambient Temperature, $T_A = 311°K$
Area of cylinder ends, $A_{CE} = 0.025$ m^2
Total Area of curved surfaces, $A_{CS} = 0.132$ m^2
Decay Heat Input $Q_{DT} = 3$ W

The transport package is assumed to undergo free radiative heat transfer from the top and sides.

b. The transport package is assumed to undergo free convective heat transfer from the top, sides and bottom.

c. To maximize the temperature of the stainless steel cylinder surface temperature, the inside transport package faces are considered perfectly insulated so there is no conduction into the transport package. In use, the inside transport package will act as a heat sink during daylight hours and a heat source during the night, but this will be ignored for this calculation.

d. The transport package is approximated as a right cylinder with dimensions, 5 inches (0.13 m) in diameter and 13 inches (0.33m) long (approximation of the solid length of the cylinder).

e. The surfaces of the transport package are assumed to be solid. The faces are considered to be sufficiently thin so that no temperature gradients exist in the faces.

f. The worst case decay heat load (3 Watts) is added to the solar heat input load.

The following heat calculations are based on the steady-state equilibrium relationship between the heat gained by the package and the heat lost.

Heat Input, Q_{IN} = Heat Output, Q_{OUT} in the steady-state.
Q_{IN} = Solar Heat Input + Decay Heat
Q_{OUT} = Heat loss by Radiation and Convection
Q_{IE} = Heat input due to insolation falling on ends
Q_{IC} = Heat input due to insolation on curved surfaces,

Solar Heat Input = $\alpha(Q_{IE} + Q_{IC})$, where α is the absorptivity

The solar heat input is the combined solar heating of the top horizontal surface and the vertical side surface. The insolation data, provided in 10 CFR 71.71(c)(1), is found in Table 3.4.A.

Table 3.4.A: Insolation Data

Surface	Insolation for a 12 hour period (g-cal/cm^2 or W/m^2)
Horizontal base	None
Other horizontal flat surfaces	800
Non-horizontal flat surfaces	200
Curved surfaces	400

Practically all solid materials used in engineering are opaque to thermal radiation (even glass is only transparent to a fairly narrow range of wavelengths), and thermal radiation is in fact either reflected or absorbed within a very shallow depth of matter. Thus for solids it is possible to neglect transmissivity and write:

$$\text{reflectivity, } \rho + \text{absorptivity, } \alpha = 1$$

i.e., the sum of the radiation reflected and absorbed by the material is equal to the total incident energy. Since the reflected energy does not contribute to the heat energy contained within the system, or package, it is not necessary to consider it in the analysis. However, the absorptivity of the material is the fraction of the total incident energy entering the system, which in this case is the heat input due to insolation.

Heat input due to insolation falling on ends, $Q_{IE} = 200\ W/m^2 \times A_{CE} = 5\ W$
Heat input due to insolation on curved surfaces, $Q_{IC} = 400\ W/m^2 \times A_{CS} = 52.8\ W$

In the case of a cylindrical package standing on the ground, the top surface can radiate freely to the surroundings assumed to be effectively at ambient temperature. For the vertical surface, the upper 90° of azimuth can radiate freely to the surrounding air in the same way as the top surfaces. However, some radiation emitted in the lower 90° will be intercepted by the ground and vice versa. Owing to the complex nature of radiation interchange, and allowing for this asymmetrical characteristic, a geometrical factor g is assumed in the following analysis.

For curved surfaces, $g_c = 0.5$
For vertical surfaces, $g_s = 0.5$

Radiation heat transfer from curved surfaces,

$$Q_{RC} = g_c \sigma \varepsilon A_{CS} \{T_W^4 - T_A^4\} = 1.54 \times 10^{-9} \{T_W^4 - T_A^4\}$$

Radiation heat transfer from end surface,

$$Q_{RE} = g_s \sigma \varepsilon A_{CE} \{T_W^4 - T_A^4\} = 3.12 \times 10^{-10} \{T_W^4 - T_A^4\}$$

Heat transfer by convection is complex as it represents a dynamic process involving fluid flow. Newton introduced a quantity known as the "heat transfer coefficient" represented by the symbol, h. From Newton's Law of cooling due to heat loss by convection:

$$Q_C = hA[T_W - T_A]$$

Consider the curved surface of the cylinder:

Cylindrical Surface Convection, $Q_{CC} = H_C A_{CS}[T_W - T_A]$

Where the free convection coefficient, $H_C = 1.32\{(1/\phi)^{1/4}(T_W - T_A)^{1/4}\}$ (Ref 1)

Therefore, $Q_{CC} = 0.27(T_W - T_A)^{5/4}$

Considering the vertical surfaces of the cylinder:

Vertical End Surface Convection, $Q_{CE} = H_S A_{CE}\{T_W - T_A\}$

Where the free convection coefficient, $H_S = 1.42\{(1/\phi)^{1/4}(T_W - T_A)^{1/4}\}$ (Ref. 1)

Therefore, $Q_{CE} = 0.06\,(T_W - T_A)^{1.25}$

Total Heat Input, $Q_{IN} = \alpha(Q_{IE} + Q_{IC}) + Q_{DT} = 28.4$ W

Total Heat Output, $Q_{OUT} = (Q_{RC} + Q_{RE}) + (Q_{CC} + Q_{CE})$

$$28.4 \text{ W} = 1.86\times10^{-9}\{T_W^4 - (311)^4\} + 3.34\times10^{-1}(T_W - (311))^{1.25}$$

Iteration of this relationship yields a maximum wall temperature (T_W) of 65.4°C (149.7°F). This temperature would constitute the most onerous Normal Transport thermal condition. Based on the package materials of construction, this temperature will not be sufficient to adversely affect the package containment or shielding integrity since the melting temperatures of all safety critical components are well above this temperature. It is therefore concluded that the Model 880 Series transport package will maintain its structural integrity and shielding effectiveness under the normal transport heat condition.

3.4.1.2 Still Air (shaded) Decay Heating

This analysis calculates the maximum surface temperature of the Model 880 Series Transport package in the shade (i.e., no insolation effects), assuming an ambient temperature of 38°C (100°F), per 10 CFR 71.43(g).

The same assumptions from Section 3.4.1.1 are used. The following heat calculations are based on the steady-state equilibrium relationship between the heat gained by the package and the heat lost.

Heat Input, Q_{IN} = Heat Output, Q_{OUT} and Q_{IN} = Decay Heat = 3 Watts

Q_{OUT} = Heat loss by Convection

Heat transfer by convection is complex as it represents a dynamic process involving fluid flow. Newton introduced a quantity known as the "heat transfer coefficient" represented by the symbol, h. From Newton's Law of cooling due to heat loss by convection:

$$Q_C = hA[T_W - T_A] \text{ (W)}$$

Considering the curved surface of the cylinder:

Cylindrical Surface Convection, $Q_{CC} = H_C A_{CS}[T_W - T_A]$

Where the free convection coefficient, $H_C = 1.32\{(1/\phi)^{1/4}(T_W - T_A)^{1/4}\}$
(Ref. 1 Section 3.4.1.2)

Therefore, $Q_{CC} = 0.27\ (T_W - T_A)^{1.25}$

Considering the vertical surfaces of the cylinder:

Vertical End Surface Convection, $Q_{CE} = H_S A_{CE}\{T_W - T_A\}$

Where the free convection coefficient, $H_S = 1.42\{(1/\phi)^{1/4}(T_W - T_A)^{1/4}\}$
(Ref. 1 Section 3.4.1.2)

Therefore, $Q_{CE} = 0.06 \times (T_W - T_A)^{1.25}$

Total Heat Input, $Q_{IN} = Q_{DT} = 3$ W

Total Heat Output, $Q_{OUT} = (Q_{CC} + Q_{CE}) = 3.34 \times 10^{-1}(T_W - T_A)^{1.25}$

Since Heat Input, Q_{IN} = Heat Output, Q_{OUT}, in the steady state.

$$3 \text{ W} = 3.34 \times 10^{-1}(T_W - T_A)^{1.25}$$

Solving for T_W, $T_W = T_A + [3/(3.34 \times 10^{-1})]^{0.8} = 320°K$

Therefore, a maximum wall temperature (T_W) of 47°C (117°F), which is less than the maximum 50°C (122°F) allowed by 10 CFR 71.43(g).

3.4.1.3 Cold Effected Materials

An ambient air temperature of –40 F in still air and shade has no effect on the safety of the package. The safety materials: stainless steel, titanium, tungsten and depleted uranium retain their mechanical properties at this temperature. Thus, it is concluded that the Model 880 transport package will withstand the normal transport cold condition.

3.4.1.4 Model 880 Series Series Type B(U) Source Capsule Thermal Analysis

This analysis demonstrates that the pressure inside the Model 880 Series source capsule, when subjected to the Hypothetical Accident Conditions of Transport thermal test, does not exceed the pressure which corresponds to the minimum yield strength at the thermal test temperature.

The source capsules used in the 880 Series are all special form tested and approved. The thermal test for special form capsules involves heating the capsules at 800°C for at least 10 minutes and allowing the capsules to cool afterwards. Test capsules are tested for leak tightness after this test and must pass intact in order to achieve special form status.

Special form capsules are also brought up to the 800°C temperature and allowed to cool prior to integrity testing. The special form capsules serve as the primary containment for the radioactive material and they demonstrate their ability to retain integrity at 800°C. Therefore it is concluded that the container and contents meet the requirements of this section.

3.4.2 Temperatures Resulting in Maximum Thermal Stresses

The temperature and pressure variations described in Sections 3.4.1 and 3.4.3 will not adversely affect the transport package during normal transport since the melting temperatures of all safety critical components are well above these temperatures and the package will experience no pressures sufficient to cause package failure. It its therefore concluded that the Model 880 Series transport packages will maintain their structural integrity and shielding effectiveness under the normal transport thermal stress conditions.

3.4.3 Maximum Normal Operating Pressure

All 880 Series components are vented to the atmosphere. As such, pressure will not build up in the packages during Normal Transport conditions. Containers will exhibit a pressure differential of 0 psi as they are vented to the atmosphere with no means for creating a pressure differential. No other contributing gas sources are present.

3.5 Thermal Evaluation Under Hypothetical Accident Conditions

3.5.1 Initial Conditions

The thermal test was not performed. Rather, an assessment was performed to demonstrate that the thermal test would not create sufficient additional damage to the package that would cause it to fail final profile criteria.

Consideration of the principle materials of manufacture and their melting points indicates that they would not fail and shielding integrity would not be significantly degraded. (See Table 2.2.A)

Damage to the outer containment, increasing the potential for oxygen ingress to the shield, by a build up of pressure within the assembly through the pyrolization of the foam, or expansion of a trapped volume of air is not possible. The projector is vented to atmosphere through both the front and rear end plates. These vents will relieve any internal generation or expansion of gases created by the elevated temperatures.

Damage incurred during the drop testing (4 foot, 30 foot and puncture) was minimal, consisting of insignificant deformation of the shell, lock mounting block and dust cover, slight bowing of the end plates and loss of one rear plate bolt. None of the damage significantly increased, or created new, pathways for the ingress of oxygen. Oxygen ingress has been shown empirically to be the primary contributing factor in the oxidation of depleted uranium shields during thermal testing (see Section 2.7.4.5.b).

3.5.2 Fire Test Conditions

Without the possibility of gross oxidation, and subsequent destruction of the shield, thermal failure is then predicated on mechanical degradation of the packages' support structure. The Model 880 is predominately of welded stainless steel construction. A similar type of construction was analyzed for the Model 865 (Certificate of Compliance number 9165). The thermal analysis for the Model 865 is part of the documentation referenced for that package under the USNRC Certificate of Compliance USA/9165/B(U). It showed that the thermal gradients that occur during temperature ramp-up (especially within the first 3 minutes) do not create undue stresses on the structure of the device (~4-5% strain).

In addition, the effect of structural yielding under self-weight at temperature caused by the degradation of mechanical properties of the materials of construction was insignificant. Areas examined were:

a. Tear-out of the shield support pin from the support bracket with the device in a vertical position (see Section 2.7.4.5.c(1)).
b. Cracking of the depleted uranium (DU) around the titanium support pin due to differential expansion (see Section 2.7.4.5.c(2)).
c. De-attachment of the rear lock assembly due to failure of the three- (3) remaining security screws (see Section 2.7.4.5.c(3)).

Based on the previous empirical data and analyses, we conclude that oxidation of the shield will not occur, the structural integrity of the package will remain intact and the containment of the

source will not be affected. As such, the Model 880 would pass the thermal test without exceeding the final profile criteria.

3.5.3 Maximum Temperatures and Pressure

See Sections 3.1.3 and 3.1.4. All 880 Series components are vented to the atmosphere. The packages are vented to atmosphere through both the front and rear end plates. These vents will relieve any internal generation or expansion of gases created by the elevated temperatures. As such, pressure will not build up in the packages during Hypothetical Accident Transport conditions. Containers will exhibit a pressure differential of 0 psi as they are vented to the atmosphere with no means for creating a pressure differential. No other contributing gas sources are present.

3.5.4 Temperatures Resulting in Maximum Thermal Stresses

The temperature and pressure variations described in Sections 3.4.1 and 3.4.3 will not adversely affect the transport package during normal transport since the melting temperatures of all safety critical components are well above these temperatures and the package will experience no pressures sufficient to cause package failure. It is therefore concluded that the Model 880 Series transport package will maintain its structural integrity and shielding effectiveness under the hypothetical accident condition transport thermal stress conditions.

3.5.5 Fuel/Cladding Temperatures for Spent Nuclear Fuel

Not applicable. This package is not used for transport of spent nuclear fuel.

3.5.6 Accident Conditions for Fissile Material Packages for Air Transport

Not applicable. This package is not used for transport of Type B quantities of fissile material.

3.6 Appendix

Not Applicable.

Section 4 – CONTAINMENT

4.1 Description of the Containment System

The containment system consists of the Model 880 Series transport package and the radioactive source capsule. This source capsule shall be qualified as Special Form radioactive material under 49 CFR 173 and IAEA TS-R-1.

4.1.1 Special Requirements for Damaged Spent Nuclear Fuel

Not applicable. This package is not used for the transport of spent nuclear fuel.

4.2 Containment Under Normal Conditions of Transport

As demonstrated in the Test Plan Reports and supported by assessments when applicable (Section 2.12), performance of the normal conditions of transport testing caused no breach of the source capsules contained in the package. The source capsules used in conjunction with the transport package have satisfied the requirements for the special form radioactive material as prescribed in 10 CFR 71.75, 49 CFR 173.469 and IAEA TS-R-1. There will be no release of radioactive material under the Normal Conditions of Transport.

The normal conditions of transport criteria listed in 10 CFR 71.71 will result in no loss of transport package containment as prescribed in 10 CFR 71.51(a)(1). This conclusion is based on information presented in Sections 2 and 3.

4.3 Containment Under Hypothetical Accident Condition

The hypothetical accident conditions outlined in 10 CFR 71.73 will result in no loss of transport package containment. This conclusion is based on information presented in Section 2.7 and Section 3.5 which show that the transport package meets the containment requirements of 10 CFR 71.51(a)(2).

4.4 Leakage Rate Tests for Type B Packages

The primary containment for the radioactive material in the Model 880 Series Transport Packages are the radioactive source capsules. All source capsules authorized for Type B transport in the Model 880 Series are certified as special form radioactive material under 10 CFR Part 71, 49 CFR Part 173 and IAEA TS-R-1. After manufacture, and again once every six months thereafter prior to transport, the source capsules are leak tested in accordance with ISO9978:1992(E) (or more recent editions) to ensure that containment of the source does not allow release of more than 0.005 μCi of radioactive material. These fabrication and periodic tests ensure that contamination release from the package does not exceed the regulatory limits.

Reference ISO9978:1992(E) – Radiation Protection – Sealed Radioactive Sources – Leakage Test Methods.

4.5 Appendix

Not applicable.

Section 5 - SHIELDING EVALUATION

5.1 Description of Shielding Design

5.1.1 Design Features

The principal shielding in the Model 880 Series transport package is the depleted uranium shield assembly. The shielding is cast as one piece and is essentially enclosed by stainless steel. Dimensional information for the individual shield containers is contained in the shield drawings (See Appendix 1.3).

5.1.2 Summary Table of Maximum Radiation Levels

Tables 5.1.A and 5.1.B include worst case radiation profile data obtained from the 880 Series packages that were tested to the Normal and Hypothetical Accident Conditions of Transport under Test Plans 108 and 186 (see Section 2.12).

Table 5.1.A: Model 880 Delta sn TP186A Summary Table of External Radiation Levels Extrapolated to Capacity of 150 Ci Ir-192 (Non-Exclusive Use) and Hypothetical Accident Transport Condition Testing[3]

Normal Conditions of Transport	Package Surface mSv/h (mrem/hr)[2]			1 Meter from Package Surface mSv/h (mrem/h)[2]		
Radiation	Top	Side	Bottom	Top	Side	Bottom
Gamma	1.68 (168)	1.83 (183)	0.98 (98)	0.008 (0.8)	0.014 (0.14)	0.010 (0.10)
Neutron	NA	NA	NA	NA	NA	NA
Total	1.68 (168)	1.83 (183)	0.98 (98)	0.008 (0.8)	0.014 (0.14)	0.010 (0.10)
10 CFR 71.47(a) or Paragraphs 530 and 531 of TS-R-1 Limit	2 (200)	2 (200)	2 (200)	0.1 (10)[1]	0.1 (10)[1]	0.1 (10)[1]
Hypothetical Accident Conditions						
Gamma				0.008 (0.8)	0.014 (0.14)	0.010 (0.10)
Neutron				NA	NA	NA
Total				0.008 (0.8)	0.014 (0.14)	0.010 (0.10)
10 CFR 71.51(a)(2) or Paragraph 656(b)(ii)(I) of TS-R-1 Limit				10 (1000)	10 (1000)	10 (1000)

[1]Transport Index may not exceed 10.
[2]Based on the cylindrical geometry of this package, the "top" is considered to be the front as profiled, the "bottom" is considered to be the back as profiled and all other surfaces are considered part of the "side" of the package.
[3]Survey results after testing were obtained from the Model 880 Delta without the optional jacket. This produced dose rates which would be higher than the Model 880 Delta if it had the optional jacket attached.

Table 5.1.B: Model Delta sn TP186A Summary Table of External Radiation Levels Extrapolated to Capacity of 150 Ci Ir-192 (Exclusive Use)[1]

	Package (or Freight Container) Surface mSv/h (mrem/h)			2 Meters from Outer Vehicle Surface mSv/h (mrem/h)		
Normal Conditions of Transport	Top	Side	Bottom	Top	Side	Bottom
Gamma	1.68 (168)	1.83 (183)	0.98 (98)	0.008 (0.8)	0.014 (0.14)	0.010 (0.10)
Neutron	NA	NA	NA	NA	NA	NA
Total	1.68 (168)	1.83 (183)	0.98 (98)	0.008 (0.8)	0.014 (0.14)	0.010 (0.10)
10 CFR 71.47(b) or Paragraphy 572 of TS-R-1 Limit	10 (1000)[2]	10 (1000)[2]	10 (1000)[2]	0.1 (10)	0.1 (10)	0.1 (10)
	Vehicle Surface mSv/h (mrem/h)			**Occupied Position mSv/h (mrem/hr)**		
Gamma	< 0.008 (0.8)	< 0.014 (1.4)	< 0.010 (0.1)	≤ 0.02 (2)[3]		
Neutron	NA	NA	NA	NA		
Total	< 0.008 (0.8)	< 0.014 (1.4)	< 0.010 (0.1)	≤ 0.02 (2)[3]		
10 CFR 71.47(b) or Paragraphy 572 of TS-R-1 Limit	2 (200)	2 (200)	2 (200)	0.02 (2)		

Hypothetical Accident Conditions	**1 Meter from Package Surface mSv/h (mrem/hr)**		
Gamma	0.008 (0.8)	0.014 (0.14)	0.010 (0.10)
Neutron	NA	NA	NA
Total	0.008 (0.8)	0.014 (0.14)	0.010 (0.10)
10 CFR 71.51(a)(2) or Paragraph 656(b)(ii)(I) of TS-R-1 Limit	10 (1000)	10 (1000)	10 (1000)

[1]For packages transported by roadway, railway and sea.
[2]For packages in closed vehicles, otherwise, 2 (200).
[3]Confirmed at time of vehicle loading prior to shipment.

Tables 5.1.C and 5.1.D include radiation profile data used to demonstrate that the Model 880 Delta and 880 Elite package configurations will meet the external radiation level requirements for non-exclusive use transport when loaded to capacity for Se-75. By assessment, since the Model 880 Sigma shield has greater shielding than the Model 880 Elite shield, the Model 880 Sigma package configuration will also meet the external radiation level requirements for non-exclusive use when loaded to capacity for Se-75.

Table 5.1.C: Model 880 Delta sn D2375 Summary Table of External Radiation Levels Extrapolated to Capacity of 150 Ci Se-75 (Non-Exclusive Use)[2]

	Package Surface mSv/h (mrem/h)			1 Meter from Package Surface mSv/h (mrem/h)		
Normal Conditions of Transport	Top	Side	Bottom	Top	Side	Bottom
Gamma	0.13 (13)	0.13 (13)	0.13 (13)	0.01 (1.0)	0.01 (1.0)	0.01 (1.0)
Neutron	NA	NA	NA	NA	NA	NA
Total	0.13 (13)	0.13 (13)	0.13 (13)	0.01 (1.0)	0.01 (1.0)	0.01 (1.0)
10 CFR 71.47(a) or Paragraphs 530 and 531 of TS-R-1 Limit	2 (200)	2 (200)	2 (200)	0.1 (10)[1]	0.1 (10)[1]	0.1 (10)[1]
Hypothetical Accident Conditions[3]						
Gamma				~0.01 (1.0)	~0.01 (1.0)	~0.01 (1.0)
Neutron				NA	NA	NA
Total				~0.01 (1.0)	~0.01 (1.0)	~0.01 (1.0)
10 CFR 71.51(a)(2) or Paragraph 656(b)(ii)(I) of TS-R-1 Limit				10 (1000)	10 (1000)	10 (1000)

[1]Transport Index may not exceed 10.
[2]Normal Condition values obtained by direct measurement corrected for capacity and detector geometry.
[3]Based on comparisons of radiation profiles for Ir-192 after hypothetical accident testing, it is assessed that radiation levels from Se-75 will be essentially unchanged after undergoing the hypothetical accident condition testing.

Table 5.1.D: Model 880 Elite sn E1060 Summary Table of External Radiation Levels Extrapolated to Capacity of 150 Ci Se-75 (Non-Exclusive Use)[2]

	Package Surface µSv/h (mrem/h)			1 Meter from Package Surface µSv/h (mrem/h)		
Normal Conditions of Transport	Top	Side	Bottom	Top	Side	Bottom
Gamma	0.13 (13)	0.13 (13)	0.13 (13)	0.01 (1.0)	0.01 (1.0)	0.01 (1.0)
Neutron	NA	NA	NA	NA	NA	NA
Total	0.13 (13)	0.13 (13)	0.13 (13)	0.01 (1.0)	0.01 (1.0)	0.01 (1.0)
10 CFR 71.47(a) or Paragraphs 530 and 531 of TS-R-1 Limit	2 (200)	2 (200)	2 (200)	0.1 (10)[1]	0.1 (10)[1]	0.1 (10)[1]
Hypothetical Accident Conditions[3]						
Gamma				~0.01 (1.0)	~0.01 (1.0)	~0.01 (1.0)
Neutron				NA	NA	NA
Total				~0.01 (1.0)	~0.01 (1.0)	~0.01 (1.0)
10 CFR 71.51(a)(2) or Paragraph 656(b)(ii)(I) of TS-R-1 Limit				10 (1000)	10 (1000)	10 (1000)

[1]Transport Index may not exceed 10.
[2]Normal Condition values obtained by direct measurement corrected for capacity and detector geometry.
[3]Based on comparisons of radiation profiles for Ir-192 after hypothetical accident testing, it is assessed that radiation levels from Se-75 will be essentially unchanged after undergoing the hypothetical accident condition testing.

Table 5.1.E includes radiation profile data used to demonstrate that the Model 880 Elite package configuration will meet the external radiation level requirements for non-exclusive use transport when loaded to capacity for Ir-192.

Table 5.1.E: Model 880 Elite sn E1060 Summary Table of External Radiation Levels Extrapolated to Capacity of 50 Ci Ir-192 (Non-Exclusive Use)[2]

	Package Surface mSv/h (mrem/h)			1 Meter from Package Surface mSv/h (mrem/h)		
Normal Conditions of Transport	Top	Side	Bottom	Top	Side	Bottom
Gamma	1.35 (135)	1.64 (164)	1.43 (143)	0.008 (0.8)	0.017 (1.7)	0.009 (0.9)
Neutron	NA	NA	NA	NA	NA	NA
Total	1.35 (135)	1.64 (164)	1.43 (143)	0.008 (0.8)	0.017 (1.7)	0.009 (0.9)
10 CFR 71.47(a) or Paragraphs 530 and 531 of TS-R-1 Limit	2 (200)	2 (200)	2 (200)	0.1 (10)[1]	0.1 (10)[1]	0.1 (10)[1]
Hypothetical Accident Conditions[3]						
Gamma				0.008 (0.8)	0.017 (1.7)	0.009 (0.9)
Neutron				NA	NA	NA
Total				0.008 (0.8)	0.017 (1.7)	0.009 (0.9)
10 CFR 71.51(a)(2) or Paragraph 656(b)(ii)(I) of TS-R-1 Limit				10 (1000)	10 (1000)	10 (1000)

[1]Transport Index may not exceed 10.
[2]Normal Condition values obtained by direct measurement corrected for capacity and detector geometry.
[3]Based on comparisons of radiation profiles for the 880 Delta when loaded with Ir-192 after hypothetical accident testing, it is assessed that radiation levels from the 880 Elite for Ir-192 will be essentially unchanged after undergoing the hypothetical accident condition testing.

5.2 Source Specification

5.2.1 Gamma Source

The gamma sources allowed for transport in the Model 880 Series transport package are specified in Sections 1.2.2 and 2.10.

5.2.2 Neutron Source

Not applicable. The Model 880 Series transport packages are not used for the transportation of neutron emitting sources.

5.3 Shielding Model

5.3.1 Configuration of Source and Shielding

A shielding model was not used as the primary justification for these packages. Shielding justification was based on direct measurement. Since the 880 Delta testing results showed that an insignificant change had occurred in the radiation profiles, all isotopes in all versions of the Model 880 Series packages were considered acceptable.

5.3.2 Material Properties

Not applicable. A shielding model was not used as the primary justification for these packages. Shielding justification was based on direct measurement using Ir-192 and Se-75. Additional package configurations were justified based on test results of the Model 880 Delta style package.

5.4 Shielding Evaluation

5.4.1 Methods

Shielding justification was based on direct measurement and assessment. Radiation profiles have not been performed for the Model 880 Sigma, however, the shield design is identical to the Model 880 Delta. This design is capable of producing shields that can adequately shield 150 Ci of Ir-192 to within the regulatory dose limits. Due to variances in the shield manufacturing process, some shields are produced with a slightly lower shielding capacity. Shields which demonstrate a capacity of 130 Ci of Ir-192, based on device profiles prior to final acceptance and shipment, are distributed as Model 880 Sigma devices.

All packages are profiled prior to final acceptance and shipment. This profile takes into account the maximum capacity and detector geometry. Any package not meeting the required dose rates is rejected.

If the optional jacket is used, it will further reduce surface dose rates on some areas of the package. As such, the use of the jacket will have no detrimental impact on dose rates

5.4.2 Input and Output Data

Radiation measurements included in this Section were adjusted to the maximum activity capacity for the package (e.g., activity correction factor) and the surface measurements were also adjusted to correct for off-set of the survey meter probe from the true surface of the package.

Activity correction factors (CF_A) were obtained by using the following relationship:

$$CF_A = \frac{Maximum\,Package\,Activity\,Capacity\ (A_C)}{Actual\ \mathrm{Pr}\,ofile\,Activity\ (A_P)}$$

$$For\,Example,\ if\ A_P = 135\,Ci\ and\ A_C = 150\,Ci,\ then$$

$$CF_A = \frac{150\,Ci}{135\,Ci} = 1.1$$

Therefore all original surface and 1 meter profile measurements would be multiplied by a factor of 1.1 for a package profiled using 135 Ci and a package capacity of 150 Ci.

Radiation measurements at the surface of the container were also adjusted to compensate for the off-set of the survey meter probe from the true surface of the package.

Surface correction factors (SCF) were obtained by using the following relationship:

$$SCF = \sqrt{\frac{d_2^2}{d_1^2}} \; where\ d_1\ and\ d_2\ are\ \text{determined}\ as\ shown\ in\ Figure\ 5.4.A.$$

$$For\ Example,\ if\ d_1 = 9\ inches\ and\ d_2 = 10\ inches,\ then$$

$$SCF = \sqrt{\frac{(10\ inches)^2}{(9\ inches)^2}} = 1.11$$

Subsequent evaluation of the SCF revealed that the use of the inverse square law introduces an error when the material of the shield contains a heavy element such as tungsten, uranium or lead. When heavy shields are involved there is a build up of Compton-scattered photons and X-rays which causes scattered radiation to emanate from everywhere within the shield and not just from the source in the center. Under these circumstances, the inverse square law relationship between dose rate and distance overestimates the actual dose rate on the surface of the device.

Experimental measurement using TLDs have demonstrated that the SCF for devices using heavy element shielding varies more accurately as follows:

$$SCF = \sqrt{\frac{d_3}{d_1}} \; where\ d_1\ and\ d_3\ are\ \text{determined}\ as\ shown\ in\ Figure\ 5.a.$$

$$For\ Example,\ if\ d_1 = 9\ inches\ and\ d_3 = 10\ inches,\ then$$

$$SCF = \sqrt{\frac{(10\ inches)}{(9\ inches)}} = 1.05$$

Therefore in the example shown, all original surface profile measurements located along the side of the package shown in Figure 5.4.A would also be multiplied by a factor to account for surface correction of the detector to the package surface. Different SCF's would be calculated for the any dimension of the container where the minimum distance from the center of the activity to the center of the radiation probe is different.

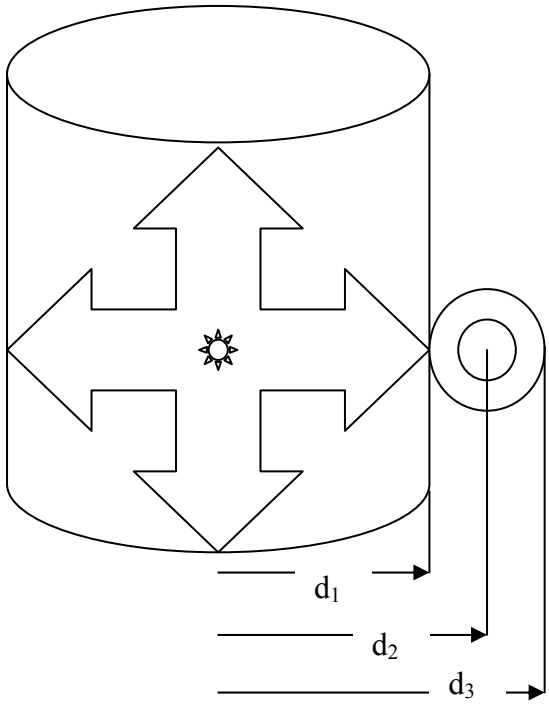

d_1 = distance from activity center to surface of container.

d_2 = distance from activity center to surface of container plus radius of the survey meter probe.

d_3 = distance from activity center to back of the probe.

Figure 5.4.A. - Sample Surface Correction Factor Distance Criteria

The radiation profile data showed no increase in radiation dose after testing beyond normal measurement variations. All test specimens met the regulatory requirements.

5.4.3 Flux-to-Dose-Rate Conversion

Not applicable. Flux rates were not used to convert to dose rates in any shielding evaluations.

5.4.4 External Radiation Levels

Radiation surveys for all 880 Series configurations showed maximum surface and 1 meter radiation levels from the transport packages within regulatory limits. Radiation surveys of 880 Series transport packages after undergoing normal and accident condition transport testing were also well within the regulatory limits.

5.5 Appendix

Not Applicable.

Section 6 - CRITICALITY EVALUATION

All parts of this section are not applicable. The Model 880 Series transport packages are not used for shipment of Type B quantities of fissile material.

Section 7 – Package Operations

Operation of the Model 880 Series transport packages must be in accordance with the operating instructions supplied with the transport package, per 10 CFR 71.87 and 71.89.

7.1 Package Loading

7.1.1 Preparation for Loading

The Model 880 Series transport packages must be loaded and closed in accordance with procedures that, at a minimum, include the requirements specified in this section. Shipment of Type B quantities of radioactive material are authorized for sources specified in Section 7.1.1.1. Maintenance and inspection of these packages is in accordance with the requirements specified in Section 7.1.1.2.

*7.1.1.1 **Authorized Package Contents***

The Model 880 Series transport packages are designed for use with a special form source capsules as approved under a U.S. Department of Transportation special form certification. The approved isotopes and maximum package activity limits is shown in Table 7.1.A. Details of encapsulation as well as chemical and physical form of the radioactive material will comply with specifications approved under U.S. Department of Transportation or other Competent Authority special form certifications.

Table 7.1.A: Isotopes Permitted in the Model 880 Series

Model	Nuclide	Form[1]	Maximum Capacity[2]	Maximum DU Weight	Maximum Weight Without Jacket	Maximum Weight With Jacket (Version 1)	Maximum Weight With Jacket (Version 2)
880 Delta	Ir-192	Special Form Sources	150 Ci	34.4 lbs (15.6 kg)	46 lbs (21 kg)	52 lbs (24 kg)	55 lbs (25 kg)
	Se-75	Special Form Sources	150 Ci				
880 Sigma	Ir-192	Special Form Sources	130 Ci	34.4 lbs (15.6 kg)	46 lbs (21 kg)	52 lbs (24 kg)	55 lbs (25 kg)
	Se-75	Special Form Sources	150 Ci				
880 Elite	Ir-192	Special Form Sources	50 Ci	25 lbs (11 kg)	37 lbs (17 kg)	42 lbs (19 kg)	45 lbs (20 kg)
	Se-75	Special Form Sources	150 Ci				

[1] Special Form is defined in 10 CFR 71, 49 CFR 173, and IAEA TS-R-1.
[2] Maximum Capacity Activity for Ir-192 is defined as output Curies as required in ANSI N432 and 10 CFR 34.20 and in line with TS-R-1 and Rulemaking by the USNRC and the USDOT published in the Federal Register on 26 January 2004

7.1.1.2 Packaging Maintenance and Inspection Prior to Loading

a. Ensure all markings are legible.

b. Inspect the container for signs of significant degradation. Ensure all welds are intact, the container is free of heavy rust and cracks/damage to the steel housing which breaches the container. If there is any evidence of bent or cracked welds contact QSA Global, Inc. prior to shipping.

c. Assure all bolts and fasteners (hardware) required for assembly of the package and as specified on the drawings referenced on the Type B transport certificate are fit for use. Without removing the hardware by disassembly from the device, examine the visible external surfaces of the bolts/fasteners for any signs of fatigue cracking.

Note: A visual examination of the bolt/fastener thread condition is performed after removal from the exposure device as part of the Quarterly and Annual Maintenance inspections required for radiography devices under 10 CFR 34.31 or equivalent Agreement State regulations.

The bolts/fasteners must be replaced if they are no longer fit for use (e.g., threads stripped, unable to fully thread, signs of cracking, etc). Ensure the front port is properly secured. Ensure a seal wire is properly installed. Ensure any replacement hardware meets all applicable specifications listed on the drawings referenced on the Type B transport certificate.

d. If the container fails any of the inspections in steps 7.1.1.2.a-c, remove the container from use until it can be brought into compliance with the Type B certificate.

7.1.2 Loading of Contents

NOTE: ***These loading operations apply to "dry" loading only. None of the shield configurations for the Model 880 Series package are approved for wet loading.***

7.1.2.1 Prior to transportation, ensure the package and its contents meet the following requirements:

a. The contents are authorized for use in the package.

b. The package condition has been inspected in accordance with Section 7.1.1.2.

c. Ensure that the source is secured into place in the storage position after loading the 880 package in accordance with the applicable licensing provisions for the user's facility related to radioactive material handling.

7.1.3 Preparation for Transport

7.1.3.1 Ensure that all conditions of the certificate of compliance are met.

7.1.3.2 Perform a contamination wipe of the outside surface of the package and ensure removable contamination does not exceed 0.0001 μCi when averaged over a wipe area of 300 cm^2.

7.1.3.3 Survey all exterior surfaces of the package to assure that the radiation level does not exceed 200 mR/hr at the surface. Measure the radiation level at one meter from all exterior surfaces to assure that the radiation level is less than 10 mR/hr.

7.1.3.4 Ship the container according to the procedure for transporting radioactive material as established in 10 CFR 71.5 and 49 CFR 171-178.

NOTE: The US Department of Transportation, in 49 CFR 173.22(c), requires each shipper of Type B quantities of radioactive material to provide prior notification to the consignee of the dates of shipment and expected arrival.

7.2 Package Unloading

7.2.1 Receipt of Package from Carrier

7.2.1.1 The consignee of a transport package of radioactive material must make arrangements to receive the transport package when it is delivered. If the transport package is to be picked up at the carrier's terminal, 10 CFR 20.1906 requires that this be done expeditiously upon notification of its arrival.

7.2.1.2 Upon receipt of a transport package of radioactive material:

a. Survey the transport package with a survey meter as soon as possible, preferably at the time of pick-up and no more than three hours after it was received during normal working hours. Radiation levels should not exceed 200 mR/hr at the surface of the transport package, nor 10 mR/hr at a distance of 1 meter from the surface.

b. Record the actual radiation levels on the receiving report.

c. If the radiation levels exceed these limits, secure the container in a Restricted Area and notify the appropriate personnel in accordance with 10 CFR 20 or applicable Agreement State regulations.

d. Inspect the outer container for physical damage or leaking. If the package is damaged or leaking or it is suspected that the package may have leaked or been damaged, restrict access to the package. As soon as possible, contact the Radiation Safety Office to perform a full assessment of the package condition and take necessary follow-up actions.

e. Record the radioisotope, activity, model number, and serial number of the source and the transport package model number and serial number.

7.2.2 Receipt of Contents

7.2.2.1 Unload the package must be in accordance with the instructions supplied with the package per 10 CFR 71.89.

7.2.2.2 Unloading of the package must also be in accordance with applicable licensing provisions for the user's facility related to radioactive material handling.

7.3 Preparation of Empty Package for Transport

In the following instructions, an *empty* transport package refers to a Model 880 Series transport package without an active source contained within the shielded container. To ship an empty transport package:

7.3.1. Perform the following procedure to confirm that there are no unauthorized sources within the container:

7.3.1.1 Remove the authorized source assembly from the package be in accordance with the instructions supplied with the package per 10 CFR 71.89.

7.3.1.2 After removing the source and disconnecting the source assembly, attach the jumper (dummy connector without a serial number) to the male connector of the drive cable.

7.3.1.3 Retract the jumper into the package and disconnect the controls.

7.3.1.4 Insert the shipping cover, rotate the selector ring to the lock position, depress the plunger lock and remove the key.

7.3.1.5 Remove the source identification tag from the package and keep it with the source.

7.3.2 Assure that the levels of removable radioactive contamination on the outside surface of the transport package do not exceed 4 Bq/cm^2 (when averaged over 300 cm^2).

7.3.3 When it is confirmed that the Model 880 Series transport package is empty, survey the device and prepare the transport package for shipment. Survey the assembled package to ensure the external surface radiation level does not exceed 5 μSv/hr.

7.3.4 Ship the container according to the procedure for transporting radioactive material as established in10 CFR 71.5.

7.4 Other Operations

7.4.1 Package Transportation By Consignor

Persons transporting the Model 880 Series transport package in their own conveyances should comply with the following:

7.4.1.1 For a conveyance and equipment used regularly for radioactive material transport, check to determine the level of contamination that may be present on these items. This contamination check is suggested if the package shows signs of damage upon receipt or during transport, or if a leak test on the special form source transported in the package exceeds the allowable limit of 185 Bq (0.005 μCi).

7.4.1.2 If contamination above 4 Bq/cm^2 (0.0001 μCi/cm^2) based on wiping an area of 300 cm^2 is detected on any part of a conveyance or equipment used regularly for radioactive material transport, or if a radiation level exceeding 5 μSv/h (0.5 mR/hr) is detected on any conveyance or equipment surface, then remove the affected item from use until decontaminated or decayed to meets these limits.

7.4.1.3 Ensure the package is properly blocked and braced prior to transport to prevent movement within the conveyance during transport.

7.4.2 Emergency Response

In the event of a transport emergency or accident involving this package, follow the guidance contained in "2008 Emergency Response Guidebook: A Guidebook for First Responders During the Initial Phase of a Dangerous Goods/Hazardous Materials Incident", or equivalent guidance documentation.

Reference: **"**2008 Emergency Response Guidebook: A Guidebook for First Responders During the Initial Phase of a Dangerous Goods/Hazardous Materials Incident.

7.5 Appendix

Not Applicable.

Section 8 - ACCEPTANCE TESTS AND MAINTENANCE PROGRAM

8.1 Acceptance Test

8.1.1 Visual Inspections and Measurements

8.1.1.1 Visually inspect each transport package component to be shipped to assure the following:

a. The transport package was assembled properly to the applicable drawing referenced on the Type B transport certificate.

b. Evaluate each shield container for shielding integrity when used in the applicable Model 880 Series assembly to ensure the transport dose rate requirements are met when the container is loaded to capacity.

c. All fasteners as required by the applicable drawings referenced on the Type B transport certificate are properly installed and secured.

d. The relevant labels are attached, contain the required information, and are marked in accordance with 10 CFR 20.1904, 10 CFR 40.13(c)(6)(i), 10 CFR 34, and 10 CFR 71 or equivalent Agreement State regulations.

8.1.1.2 Visual inspections and measurements will be performed in accordance with QSA Global, Inc.'s USNRC approved Quality Assurance Program No. 0040.

8.1.2 Weld Examinations

Weld examinations will be performed in accordance with the applicable drawings requirements and in accordance with QSA Global, Inc.'s USNRC approved Quality Assurance Program No. 0040.

8.1.3 Structural and Pressure Tests

Prior to first use as part of a Model 880 Series Transport Package, container structural conformance will be evaluated in accordance with the applicable drawings requirements and in accordance with QSA Global, Inc.'s USNRC approved Quality Assurance Program No. 0040. The containment system is not designed to require increased or decreased operating pressures to maintain containment during transport, therefore pressure tests of package components prior to first use are not required.

8.1.4 Leakage Tests

The source capsules (primary containment) are wipe tested for leakage of radioactive contamination upon initial manufacture. The removable contamination must be less than 185 Bq (0.005 μCi). The source capsules will also be subjected to leak tests under ISO9978:1992(E) (or more recent editions). The source capsules are not used if they fail any of these tests.

8.1.5 Component and Material Tests

Component and material compliance is achieved in accordance with the requirements in QSA Global, Inc.'s USNRC approved Quality Assurance Program No. 0040.

8.1.6 Shielding Tests

The radiation levels at the surface of the transport package and at 1 meter from the surface are measured upon manufacture. This survey is performed in a low background area and involves a slow scan survey of the entire surface area as well as one meter from the surface of the package. This survey is used to identify any significant void volumes or shield porosity which could prevent the finished device from complying with the dose limits in 10 CFR 71.47.

The radiation profile survey is made with the radiation detector housing in contact with the surface of the package and then also at one meter from the surface of the container. These radiation levels, when extrapolated to the rated capacity of the transport package, must not exceed 200 mR/hr at the surface, nor 10 mR/hr at 1 meter from the surface of the transport package. Failure of this test prevented use of the package as a Type B(U) package.

Rejected packages which do not comply with the construction requirements on the applicable drawings referenced on the Type B certificate, or that do not comply with the radiation profile requirements will not distributed as approved Type B(U) packages.

8.1.7 Thermal Tests

Not applicable. The source content of the Model 880 Series packages has minimal effect on the package surface temperature and therefore no additional testing is necessary to evaluate thermal properties of the packaging.

8.1.8 Miscellaneous Tests

Not applicable.

8.2 Maintenance Program

8.2.1 Structural and Pressure Tests

Not applicable. Material certification is obtained for Safety Class A components used in the transport package prior to their initial use. Based on the construction of the design, no additional structural testing during the life of the package is necessary if the container shows no signs of defect when prepared for shipment in accordance with the requirements of Section 7 of the SAR. The 880 Series packaging is not designed to require increased or decrease operating pressures to maintain containment during transport, therefore pressure tests of package components prior to individual shipment is not required.

8.2.2 Leakage Tests

As described in Section 8.1.4, "Leakage Tests," the radioactive source assembly is leak-tested at manufacture. In addition, the sources are leak tested in accordance with that Section at least once every six months thereafter if being transported to ensure that removable contamination is less than 185 Bq (0.005 μCi). Also a contamination wipe is performed of the shield source tubes whenever the shield is returned to the manufacturer (typically the shield is shipped to a customer with new sources and may be returned directly to the manufacturer with decayed sources for disposition)

8.2.3 Component and Material Tests

The transport package is inspected for tightness of fasteners, proper seal wires, general condition and fitness for use prior to each use (see Section 7.1.1). The gasket is inspected prior to each shipment. If there are any rips, tears, or degradation of the rubber, the gasket will be replaced.

Prior to each use, a radiation survey of the transport package is made to assure that the radiation levels do not exceed 200 mR/hr at the surface, nor 10 mR/hr at 1 meter from the surface.

8.2.4 Thermal Tests

Not applicable. The source content of the Model 880 Series package has no adverse effect on the package surface temperature and therefore no additional testing is necessary to evaluate thermal properties of the packaging prior to shipment.

8.2.5 Miscellaneous Tests

Inspections and tests designed for secondary users of this transport package under the general license provisions of 10 CFR 71.17(b) are provided in Section 7.

8.3 Appendix

Not applicable.

Section 9 – Quality Assurance

9.1 U.S. Quality Assurance Program Requirements

All component fabrication (including assembly) is controlled under the QSA Global, Inc. Quality Assurance program approved by the USNRC (approval number 0040) and ISO 9001.

9.2 Canada Quality Assurance Program Requirements

Not applicable. This package is originally submitted for certification in the United States and complies with the criteria in Section 9.1.