QSA Global, Inc.
40 North Avenue
Burlington, MA 01803
Telephone: (781) 272-2000
Toll Free: (800) 815-1383
Facsimile: (781) 273-2216

05 November 2010

Mr. Eric Benner, Chief
Division of Spent Fuel Storage and Transportation
Office of Nuclear Material Safety and Safeguards
U.S. Nuclear Regulatory Commission
11555 Rockville Pike, Mailstop: EBB-3D-02M
Rockville, MD 20852

RE: New Type B(U) Application for the Models Sentry 110, Sentry 330 and 867 Transport Package Designs

Dear Director:

QSA Global, Inc. requests Type B(U) review and approval for the Model designations Sentry 110, Sentry 330 and 867 transport container designs. These package designs are of similar construction and fabrication and as such are considered a "family" of packages that we request be reviewed and approved under a single Type B(U) certification.

Enclosed with this letter is Revision 0 of the SAR, complete with all reference appendices and with descriptive drawings detailing these packages. The SAR has been formatted to comply with the recommended guidance in NUREG 1886 (Final – March 2009). These package designs will be submitted to the Canadian Nuclear Safety Commission to allow Type B(U) transport in Canada after obtaining USNRC and USDOT approval for Type B(U) transport. Should you have any additional questions or wish to discuss this submission after receipt please feel free to contact me.

Sincerely,

Lori Podolak
Senior Regulatory Affairs Specialist
Regulatory Affairs Department
Ph: (781) 505-8241
Fax: (781) 359-9191
Email: Lori.Podolak@qsa-global.com

RA/QA Approval	5 Nov 10 Date
Engineering Approval	5 Nov 10 Date

Enclosures: (1-Hard Copy Original and 6 CDs to the letter cc, each CD containing copies of the following Files):

- SAR Revision 0
- R86000 Rev A
- List of Affected Pages

cc: Document Control Desk
Spent Fuel Project Office
Office of Nuclear Material Safety and Safeguards
U.S. Nuclear Regulatory Commission
11555 Rockville Pike
One White Flint
Rockville, MD 20852

Safety Analysis Report for the Models Sentry 330, Sentry 110 & 867 Transport Packages

List of Affected Pages	
Revision 0, October 2010	Original Submission.

Safety Analysis Report

QSA Global, Inc.

Models Sentry 110, Sentry 330 and 867
Type B(U) - 96
Transport Package

October 2010

Revision 0

Contents

SECTION 1 - GENERAL INFORMATION 1-1

1.1 INTRODUCTION 1-1
1.2 PACKAGE DESCRIPTION 1-1
1.2.1 Packaging 1-4
1.2.1.1 *Shield 1-4*
1.2.1.2 *Welded Body 1-4*
1.2.1.3 *Lock Assembly 1-5*
1.2.1.4 *Front Plate Assembly 1-8*
1.2.1.5 *Rib/Link Assemblies (Optional) 1-9*
1.2.1.6 *Source Assemblies 1-9*
1.2.2 Contents 1-9
1.2.3 Special Requirements for Plutonium 1-10
1.2.4 Operational Features 1-10
1.3 APPENDIX 1-10

SECTION 2 - STRUCTURAL EVALUATION 2-1

2.1 DESCRIPTION OF STRUCTURAL DESIGN 2-1
2.1.1 Discussion 2-1
2.1.2 Design Criteria 2-1
2.1.3 Weight and Centers of Gravity 2-1
2.1.4 Identification of Codes and Standards for Package Design 2-1
2.2 MATERIALS 2-2
2.2.1 Material Properties and Specifications 2-2
2.2.2 Chemical, Galvanic or Other Reactions 2-2
2.2.3 Effects of Radiation on Materials 2-3
2.3 FABRICATION AND EXAMINATION 2-3
2.3.1 Fabrication 2-3
2.3.2 Examination 2-3
2.4 GENERAL REQUIREMENTS FOR ALL PACKAGES 2-3
2.4.1 Minimum Package Size 2-3
2.4.2 Tamper-Indicating Feature 2-4
2.4.3 Positive Closure 2-4
2.5 LIFTING AND TIEDOWN STANDARDS FOR ALL PACKAGES 2-4
2.5.1 Lifting Devices 2-4
2.5.1.1 Basic Configuration (without rib/link assembly) 2-4
2.5.1.2 Standard Configuration (with rib/link assembly) 2-4
2.5.2 Tie-Down Devices 2-4
2.5.2.1 Basic Configuration (without rib/link assembly) 2-4
2.5.2.2 Standard Configuration (with rib/link assembly) 2-5
2.6 NORMAL CONDITIONS OF TRANSPORT 2-5
2.6.1 Heat 2-5
2.6.1.1 Summary of Pressures and Temperatures 2-5
2.6.1.2 Differential Thermal Expansion 2-6
2.6.1.3 Stress Calculations 2-6
2.6.1.4 Comparison with Allowable Stresses 2-7
2.6.2 Cold 2-7
2.6.3 Reduced External Pressure 2-7
2.6.4 Increased External Pressure 2-7
2.6.5 Vibration 2-8

2.6.6 Water Spray *2-8*
2.6.7 Free Drop *2-8*
2.6.7.1 Rear Plate Port Drop Orientation – Square Hit *2-9*
2.6.7.2 Rear Plate Port Drop Orientation – Edge Hit *2-10*
2.6.7.3 Shell Side Drop Orientation – Weld Seam Hit *2-11*
2.6.7.4 Shell Edge Drop Orientation – Seam Hit *2-12*
2.6.7.5 Welded Body Drop Orientation – Top Surface Hit *2-13*
2.6.7.6 Normal Transport Drop Test Results Summary Evaluation *2-14*
2.6.8 Corner Drop *2-17*
2.6.9 Compression or Stacking *2-17*
2.6.10 Penetration *2-18*
2.7 HYPOTHETICAL ACCIDENT CONDITIONS 2-18
2.7.1 Free Drop *2-20*
2.7.1.1 End Drop *2-20*
2.7.1.2 Side Drop *2-23*
2.7.1.3 Corner Drop *2-26*
2.7.1.4 Oblique Drops *2-27*
2.7.1.5 Summary of Results *2-28*
2.7.2 Crush *2-28*
2.7.3 Puncture *2-29*
2.7.3.1 Puncture test of TP180A and TP180B *2-29*
2.7.3.2 Puncture test of TP180C *2-30*
2.7.3.3 Puncture test of TP180E *2-31*
2.7.3.5 Puncture test of TP180G *2-32*
2.7.3.6 Summary of Results *2-32*
2.7.4 Thermal *2-33*
2.7.4.1 Summary of Pressures and Temperatures *2-33*
2.7.4.2 Differential Thermal Expansion *2-33*
2.7.4.3 Stress Calculations *2-34*
2.7.4.4 Comparision of Allowable Stresses *2-34*
2.7.4.5 Additional Thermal Analysis *2-34*
2.7.5 Immersion - Fissile Material *2-38*
2.7.6 Immersion - All Packages *2-38*
2.7.7 Deep Water Immersion Test (for Type B Packages Containing More than 10^5 A_2) *2-39*
2.7.8 Summary of Damage *2-39*
2.8 ACCIDENT CONDITIONS FOR AIR TRANSPORT OF PLUTONIUM OR PACKAGES WITH LARGE QUANTITIES OF RADIOACTIVITY 2-41
2.9 ACCIDENT CONDITIONS FOR FISSILE MATERIAL PACKAGES FOR AIR TRANSPORT 2-41
2.10 SPECIAL FORM 2-41
2.11 FUEL RODS 2-41
2.12 APPENDIX 2-41
2.12.1 Test Plan 180 Revision 2 dated 7 April 2009 ..... *2-43*
2.12.2 Test Plan 180 Addendum Revision 0 dated 25 February 2010 ..... *2-44*
2.12.3 Test Plan 180 Report #1 dated 14 January 2010 ..... *2-45*
2.12.4 Test Plan 180 Report #2 dated 7 April 2010 ..... *2-46*
2.12.5 Test Plan Report 72-S2 (680-OP) dated 15 February 1999 (minus Appendices A through C) *2-47*
2.12.6 Test Plan Report 80 dated June 1999 (Minus Manufacturing Records) *2-48*
2.12.7 USDOT Special Form Certificate USA/0377/S-96 Rev 7 ..... *2-49*
2.12.8 Test Plan 79 Report dated 22 October 1998 ..... *2-50*
2.12.9 Technical Report 171 Sentry Transport Package Lifting Analysis dated 30 Jun 2010 ..... *2-51*
2.12.10 Technical Report 172 Sentry Transport Package Tie-Down Analysis dated 21 Jul 2010 ..... *2-52*
2.12.11 Test Plan 195 Revision 0 dated 30 June 2010 ..... *2-53*
2.12.12 Test Plan Report 195 Revision 0 dated 21 July 2010 ..... *2-54*

SECTION 3 - THERMAL EVALUATION **3-1**

3.1 DESCRIPTION OF THERMAL DESIGN 3-1
3.1.1 Design Features 3-1
3.1.2 Decay Heat of Contents 3-1
3.1.3 Summary Tables of Temperatures 3-2
3.1.4 Summary Tables of Maximum Pressures 3-2
3.2 MATERIAL PROPERTIES AND COMPONENT SPECIFICATIONS 3-2
3.2.1 Material Properties 3-2
3.2.2 Component Specifications 3-4
3.3 GENERAL CONSIDERATIONS 3-4
3.3.1 Evaluation by Analysis 3-4
3.3.2 Evaluation by Test 3-4
3.4 THERMAL EVALUATION UNDER NORMAL CONDITIONS OF TRANSPORT 3-4
3.4.1 Heat and Cold 3-4
3.4.2 Temperatures Resulting in Maximum Thermal Stresses 3-9
3.4.3 Maximum Normal Operating Pressure 3-10
3.5 THERMAL EVALUATION UNDER HYPOTHETICAL ACCIDENT CONDITIONS 3-10
3.5.1 Initial Conditions 3-10
3.5.2 Fire Test Conditions 3-10
3.5.3 Maximum Temperatures and Pressure 3-12
3.5.4 Temperatures Resulting in Maximum Thermal Stresses 3-12
3.5.5 Fuel/Cladding Temperatures for Spent Nuclear Fuel 3-13
3.5.6 Accident Conditions for Fissile Material Packages for Air Transport 3-14
3.6 APPENDIX 3-14

SECTION 4 – CONTAINMENT 4-1

4.1 DESCRIPTION OF THE CONTAINMENT SYSTEM 4-1
4.1.1 Special Requirements for Damaged Spent Nuclear Fuel 4-1
4.2 CONTAINMENT UNDER NORMAL CONDITIONS OF TRANSPORT 4-1
4.3 CONTAINMENT UNDER HYPOTHETICAL ACCIDENT CONDITIONS 4-1
4.4 LEAKAGE RATE TESTS FOR TYPE B PACKAGES 4-1
4.6 APPENDIX 4-2

SECTION 5 - SHIELDING EVALUATION 5-1

5.1 DESCRIPTION OF SHIELDING DESIGN 5-1
5.1.1 Design Features 5-1
5.1.2 Summary Table of Maximum Radiation Levels 5-1
5.2 SOURCE SPECIFICATION 5-6
5.2.1 Gamma Source 5-6
5.2.2 Neutron Source 5-6
5.3 SHIELDING MODEL 5-7
5.3.1 Configuration of Source and Shielding 5-7
5.3.2 Material Properties 5-7
5.4 SHIELDING EVALUATION 5-7
5.4.1 Methods 5-7
5.4.2 Input and Output Data 5-7
5.4.3 Flux-to-Dose-Rate Conversion 5-9
5.4.4 External Radiation Levels 5-9
5.5 APPENDIX 5-9
5.5.1 Additional Profile Supportive Profile sheets 5-10
5.5.1.1 Model Sentry 110 sn TP178A 5-10
5.5.1.2 Model 867 sn T180J 5-10

SECTION 6 - CRITICALITY EVALUATION 6-1

SECTION 7 – PACKAGE OPERATIONS 7-1

7.1 PACKAGE LOADING 7-1
7.1.1 PREPARATION FOR LOADING 7-1
7.1.1.1 Authorized Package Contents 7-1
7.1.1.2 Packaging Maintenance and Inspection Prior to Loading 7-1
7.1.2 Loading of Contents 7-3
7.1.2.1 Generol Pre-transportation Requirements 7-3
7.2 PACKAGE UNLOADING 7-4
7.2.1 Receipt of Package from Carrier 7-4
7.2.2 Removal of Contents 7-5
7.3 PREPARATION OF EMPTY PACKAGE FOR TRANSPORT 7-5
7.4 OTHER OPERATIONS 7-6
7.4.1 Package Transportation By Consignor 7-6
7.4.2 Emergency Response 7-6
7.5 APPENDIX 7-6

SECTION 8 - ACCEPTANCE TESTS AND MAINTENANCE PROGRAM 8-1

8.1 ACCEPTANCE TEST 8-1
8.1.1 Visual Inspections and Measurements 8-1
8.1.2 Weld Examinations 8-1
8.1.3 Structural and Pressure Tests 8-1
8.1.4 Leakage Tests 8-2
8.1.5 Component and Material Tests 8-2
8.1.6 Shielding Tests 8-2
8.1.7 Thermal Tests 8-3
8.1.8 Miscellaneous Tests 8-3
8.2 MAINTENANCE PROGRAM 8-3
8.2.1 Structural and Pressure Tests 8-3
8.2.2 Leakage Tests 8-3
8.2.3 Component and Material Tests 8-3
8.2.4 Thermal Tests 8-3
8.2.5 Miscellaneous Tests 8-3
8.3 APPENDIX 8-4

SECTION 9 – QUALITY ASSURANCE 9-1

9.1 U.S. QUALITY ASSURANCE PROGRAM REQUIREMENTS 9-1
9.2 CANADA QUALITY ASSURANCE PROGRAM REQUIREMENTS 9-1
9.3 APPENDIX 9-1

List of Tables

TABLE 1.2A: MODEL SENTRY 110, SENTRY 330 AND 867 PACKAGE INFORMATION 1-3
TABLE 2.2A: MECHANICAL PROPERTIES OF PRINCIPAL TRANSPORT PACKAGE MATERIALS 2-2
TABLE 2.6A: RADIONUCLIDE DECAY ENERGY 2-5
TABLE 2.6B: SUMMARY TEMPERATURES NORMAL TRANSPORT 2-5
TABLE 2.7C: SUMMARY OF TEST UNIT RESULTS 2-39
TABLE 3.1A: SUMMARY TABLE OF TEMPERATURES 3-2
TABLE 3.1B: SUMMARY TABLE OF MAXIMUM PRESSURES 3-2
TABLE 3.2A: MATERIALS OF COMPONENTS IMPORTANT TO SAFETY 3-2
TABLE 3.2B: THERMAL PROPERTIES OF PRINCIPAL TRANSPORT PACKAGE MATERIALS 3-3
TABLE 3.4A THERMAL INPUT PARAMETERS – NORMAL CONDITION TRANSPORT 3-5

TABLE 3.4B: INSOLATION DATA 3-6
TABLE 5.1A: SENTRY 330 SN TP180C BASIC CONFIGURATION SUMMARY TABLE OF EXTERNAL RADIATION LEVELS (NON-EXCLUSIVE USE)[1,3] 5-1
TABLE 5.1B: SENTRY 330 SN TP180C BASIC CONFIGURATION SUMMARY TABLE OF EXTERNAL RADIATION LEVELS (EXCLUSIVE USE)[1,6] 5-2
TABLE 5.1C: SENTRY 330 SN TP180G SUMMARY TABLE OF EXTERNAL RADIATION LEVELS (NON-EXCLUSIVE USE)[1,3] . 5-3
TABLE 5.1D: SENTRY 110 SN TP178A SUMMARY TABLE OF EXTERNAL RADIATION LEVELS (NON-EXCLUSIVE USE)[1,3] . 5-3
TABLE 5.1E: SENTRY 110 SN TP178A SUMMARY TABLE OF EXTERNAL RADIATION LEVELS (EXCLUSIVE USE)[1,5] 5-4
TABLE 5.1F: 867 SN T180J SUMMARY TABLE OF EXTERNAL RADIATION LEVELS (NON-EXCLUSIVE USE)[1,3] 5-5
TABLE 5.1G: 867 SN T180J SUMMARY TABLE OF EXTERNAL RADIATION LEVELS (EXCLUSIVE USE)[1,5] 5-6
TABLE 7.1A: MODEL SENTRY 110, SENTRY 330 AND 867 PACKAGE INFORMATION 7-1

List of Figures

FIGURE 1.2A: ISOMETRIC VIEW OF MODELS SENTRY 110, SENTRY 330 AND 867 TRANSPORT PACKAGES – STANDARD CONFIGURATIONS 1-2
FIGURE 1.2B: ISOMETRIC VIEW OF MODELS SENTRY 110, SENTRY 330 AND 867 TRANSPORT PACKAGES – BASIC CONFIGURATIONS 1-3
FIGURE 1.2C: MODELS SENTRY 110, SENTRY 330 AND 867 TRANSPORT PACKAGES – COMMON COMPONENTS (RIBS AND LINK ASSEMBLIES ARE OPTIONAL) 1-5
FIGURE 1.2D: MODELS SENTRY 110 & SENTRY 330 LOCK ASSEMBLY COMPONENTS 1-6
FIGURE 1.2E: MODEL 867 LOCK ASSEMBLY COMPONENTS 1-7
FIGURE 1.2F: MODELS SENTRY 110 & SENTRY 330 FRONT PLATE ASSEMBLY COMPONENTS 1-8
FIGURE 1.3A SKETCH OF STANDARD TRANSPORT CONFIGURATION 1-11
FIGURE 1.3B SKETCH OF BASIC TRANSPORT CONFIGURATION 1-11
FIGURE 2.6A – 1.2 M (4 FT) DROP ORIENTATION TP180A 2-10
FIGURE 2.6B – 1.2 M (4 FT) DROP ORIENTATION TP180B 2-11
FIGURE 2.6C – 1.2 M (4 FT) DROP ORIENTATION TP180C 2-12
FIGURE 2.6D – 1.2 M (4 FT) DROP ORIENTATION TP180D 2-13
FIGURE 2.6E – 1.2 M (4 FT) DROP ORIENTATION TP180E 2-14
FIGURE 2.6F – LOCK COVER DESIGN MODIFICATION 2-15
FIGURE 2.6G – LOCK ASSEMBLY RETENTION DESIGN MODIFICATION 2-16
FIGURE 2.7A – TRANSPORT PACKAGE SPECIAL CONFIGURATION – TEST SPECIMEN TP180D & TP180G 2-19
FIGURE 2.7B – 9 M (30 FT) DROP ORIENTATION TP180E & SECOND DROP ORIENTATION TP180G 2-20
FIGURE 2.7C – 9 M (30 FT) 1ST DROP ORIENTATION TP180G 2-22
FIGURE 2.7C – 9 M (30 FT) DROP ORIENTATION TP180A 2-23
FIGURE 2.7D – 9 M (30 FT) DROP ORIENTATION TP180C – SIDE WELD SEAM HIT 2-24
FIGURE 2.7E – 9 M (30 FT) DROP ORIENTATION TP180D – LOCK PORT SIDE HIT 2-26
FIGURE 2.7F – 9 M (30 FT) FIRST DROP ORIENTATION TP180B – CORNER PACKAGE PORT TUBE HIT 2-27
FIGURE 2.7G – 9 M (30 FT) FIRST DROP ORIENTATION TP180C – CORNER PACKAGE WELD SEAM HIT 2-28
FIGURE 2.7H – 1 M DROP ORIENTATION TP180A AND TP180B 2-29
FIGURE 2.7I – 1 M DROP ORIENTATION TP180C 2-30
FIGURE 2.7J – 1 M DROP ORIENTATION TP180E 2-31
FIGURE 3.4A MODEL OF PACKAGE FOR HEAT ANALYSIS 3-4
FIGURE 5.1A. SAMPLE SURFACE CORRECTION FACTOR DISTANCE CRITERIA 5-8

Section 1 - GENERAL INFORMATION

1.1 Introduction

All versions of the Models Sentry 110, Sentry 330 and 867 are designed as transport packages and storage containers for Type B quantities of special form ^{60}Co radioactive material. They conform to the Type B(U)-96 criteria for packaging in accordance 10 CFR 71, 49 CFR 173, the IAEA Regulations for the Safe Transport of Radioactive Material No. TS-R-1 (ST-1, Revised) 1996 Edition (Revised) and Canadian Nuclear Safety Commission (CNSC) PTNS Regulations SOR/2000-208. This submission is formatted in accordance with NUREG-1886 "Joint Canada – United States Guide for Approval of Type B(U) and Fissile Material Transportation Packages" dated May 2009.

1.2 Package Description

These transport packages are variations of essentially three package designs that share a common structure, but incorporate some variations in the individual designs for functionality as radiography devices. These package designs can be transported in either the "Standard" configuration, shown in Figure 1.2a, or the "Basic" configuration, shown in Figure 1.2b.

The Standard configuration includes the handling rib and link plates not present on the Basic configuration. Otherwise, both the Standard and Basic configurations are identical. The rib/link assemblies do not impair the package's ability to meet the Type B requirements as described in this Safety Analysis Report (SAR). Transport of the package with the rib/link assemblies is the "standard transport configuration" (see Figure 1.2a). When transported without the ribs/link assemblies, this is considered the "basic transport configuration" for these packages (see Figure 1.2b).

These transport packages are constructed in accordance with descriptive drawing R86000 in Appendix 1.3. The external dimensions for all three standard configuration packages are the same. Their general dimensions are 19" (48 cm) wide x 19" (48 cm) tall x 19" (48 cm) deep.

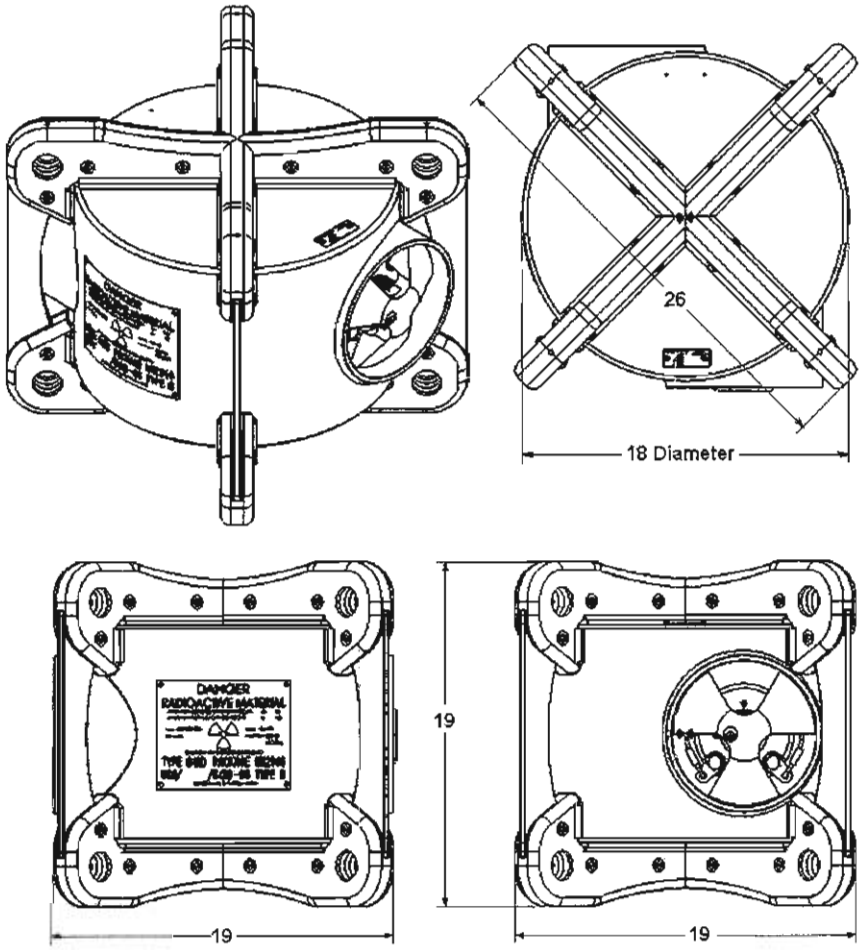

Figure 1.2a: Isometric View of Models Sentry 110, Sentry 330 and 867 Transport Packages – Standard Configurations

The external dimensions for all three Model packages in the basic configuration are the same. Their general dimensions in the basic configuration are 24" (61 cm) wide x 12" (30.5 cm) tall x 18" (46 cm) in diameter.

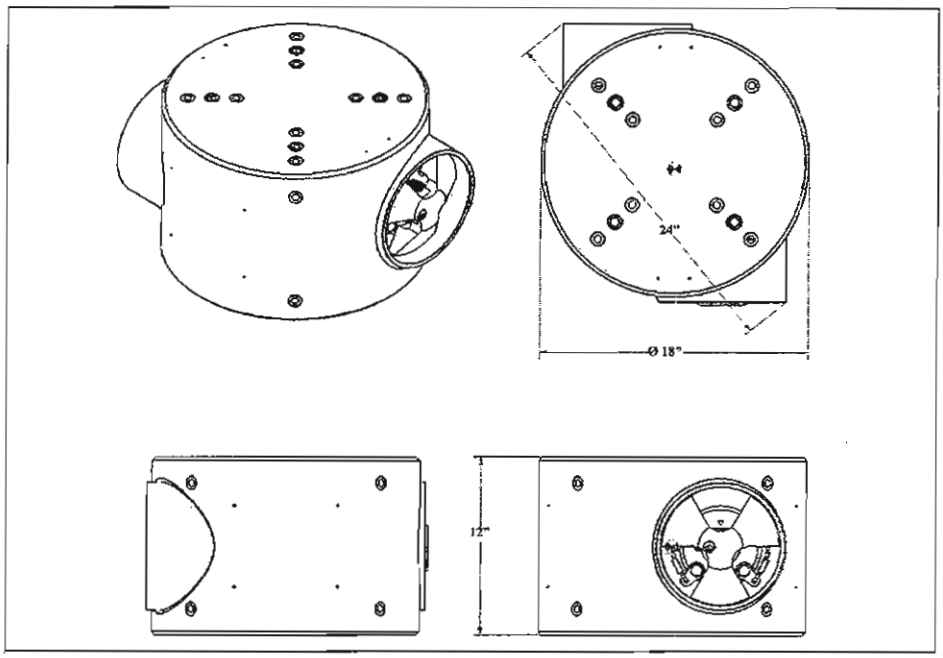

Figure 1.2b: Isometric View of Models Sentry 110, Sentry 330 and 867 Transport Packages – Basic Configurations

Additional details for these Packages are shown in Table 1.2a:

Table 1.2a: Model Sentry 110, Sentry 330 and 867 Package Information

Identification	Nuclide	Form[1]	Maximum Capacity	Maximum Content Weight[2]	Maximum DU Weight	Maximum Weight
Sentry 110 (Standard)	^{60}Co	Special Form Sources	110 Ci	0.09 lbs (40 grams)	295 lbs (134 kg)	580 lbs (263 kg)
Sentry 110 (Basic)	^{60}Co	Special Form Sources	110 Ci	0.09 lbs (40 grams)	295 lbs (134 kg)	500 lbs (227 kg)
Sentry 330 (Standard)	^{60}Co	Special Form Sources	330 Ci	0.09 lbs (40 grams)	485 lbs (220 kg)	780 lbs (354 kg)
Sentry 330 (Basic)	^{60}Co	Special Form Sources	330 Ci	0.09 lbs (40 grams)	485 lbs (220 kg)	700 lbs (318 kg)
867 (Standard)	^{60}Co	Special Form Sources	330 Ci	0.18 lbs (80 grams)	485 lbs (220 kg)	780 lbs (354 kg)
867 (Basic)	^{60}Co	Special Form Sources	330 Ci	0.18 lbs (80 grams)	485 lbs (220 kg)	700 lbs (318 kg)

[1]Special Form is defined in 10 CFR 71, 49 CFR 173, and IAEA TS-R-1.
[2]Maximum content weight includes the mass of the radioactive material and the source capsule handling wire assembly for a shipment containing the maximum number of source wire assemblies that can be transported per package design (e.g., 1 for the Models Sentry 110 and Sentry 330 and 2 for the Model 867 source changer).

1.2.1 Packaging

Figure 1.2c, with the following paragraphs describe the major components of the transport package including: the shield assembly, the welded body assembly, the rear plate lock assembly, the front plate assembly, the handling rib and link plate assemblies and the source assembly.

1.2.1.1 *Shield*

All transport package configurations include a depleted uranium shield which is completely encased and supported in a cylindrically shaped, stainless steel, welded body (see Figure 1.2c). The depleted uranium shield provides the primary radiation protection for the packages. The Model Sentry 110 and Model Sentry 330 have titanium source tubes which allow the source assembly to pass through the center of the shield. The Model Sentry 110 and Model Sentry 330 can contain only one source assembly during transport.

The Model 867 shield assembly has a partition or stop crimp installed at the center of the titanium source tube prior to casting which prevents the sources from exiting the opposite side of the container during loading into the fully stored position. A maximum of two (2) source assemblies can be loaded into the Model 867 for shipment, one in each side of the source tube of the container.

1.2.1.2 *Welded Body*

In all package constructions, the shield is located inside the welded body (shell) of the package by multiple means. The welded body includes two, tube shaped access ports which are integrally welded on opposite sides of the main body weldment. A set of two shield mounting bars are located at each end of the shield and are welded to the back plate of each access port tube. Lastly, heavy duty, titanium shield pins are passed through the shield and into the twin shield mounting bars. This construction provides two positive shield attachment points to the welded body of the package.

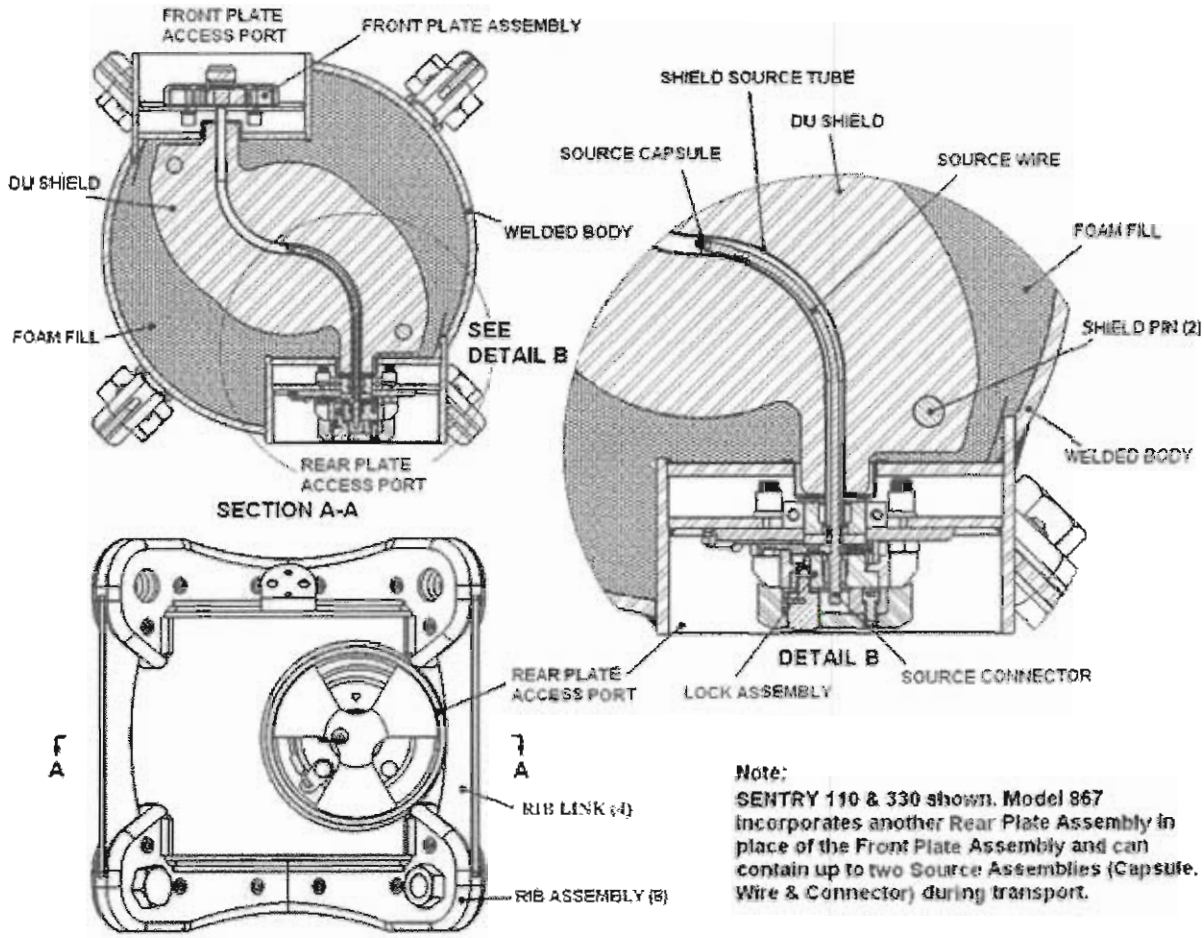

Figure 1.2c: Models Sentry 110, Sentry 330 and 867 Transport Packages – Common Components (Ribs and Link Assemblies are Optional)

The inner cavity of the welded body around the shield is filled with polyurethane foam. The foam prevents contamination to and from the depleted uranium shield. Copper separators are installed between all surfaces of the depleted uranium shield where it would otherwise come in contact with a stainless steel component to prevent any stainless steel-uranium interaction.

1.2.1.3 *Lock Assembly*

The Model Sentry 110 and Model Sentry 330 packages contain a single lock assembly. These packages do not allow the source assembly to exit the package through the lock assembly, but do secure the source in the shielded position for transport. The lock assembly for the Model Sentry 110 is identical to the lock assembly for the Model Sentry 330 except that the Model Sentry 330 uses a 0.19" (4.8 mm) thick spacer that is not used on the Model Sentry 110 package (see Figure1.2d).

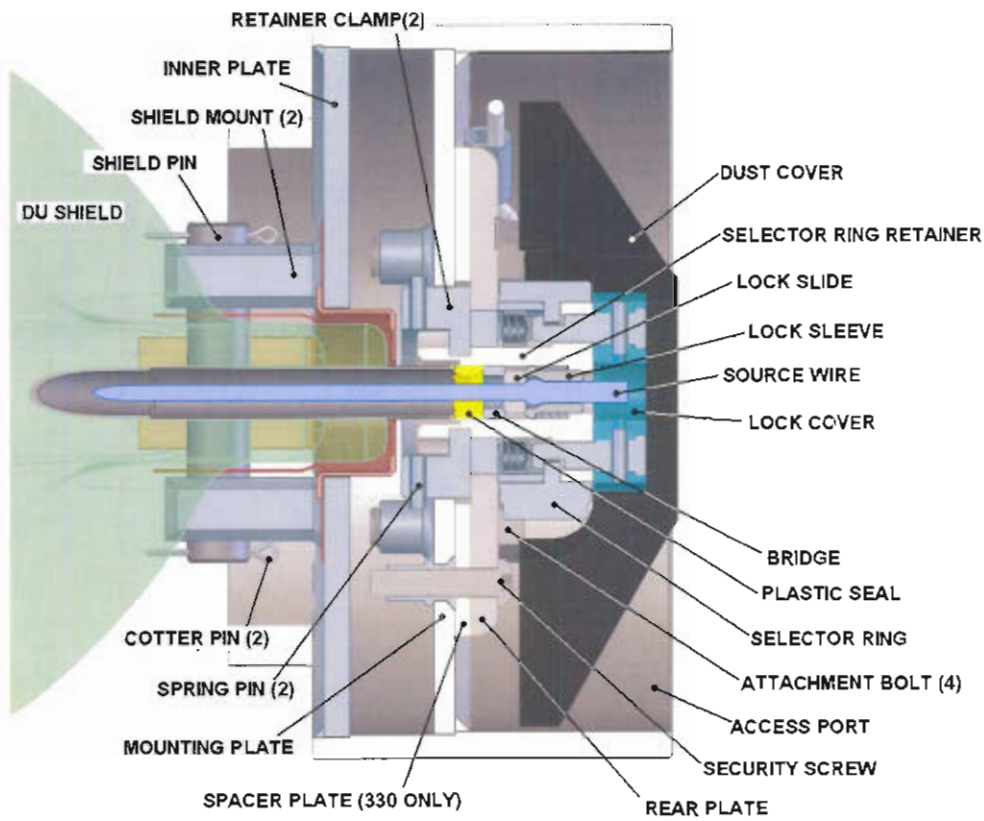

Figure 1.2d: Models Sentry 110 & Sentry 330 Lock Assembly Components

The Model 867 package contains two lock assemblies, one attached to each access port back plate. Source wire assemblies installed in the Model 867 enter and exit at the rear plate lock assembly, but cannot pass through the shield to the other rear plate access port. The source tube center partition blocks the path through the shield (see Figure 1.2e).

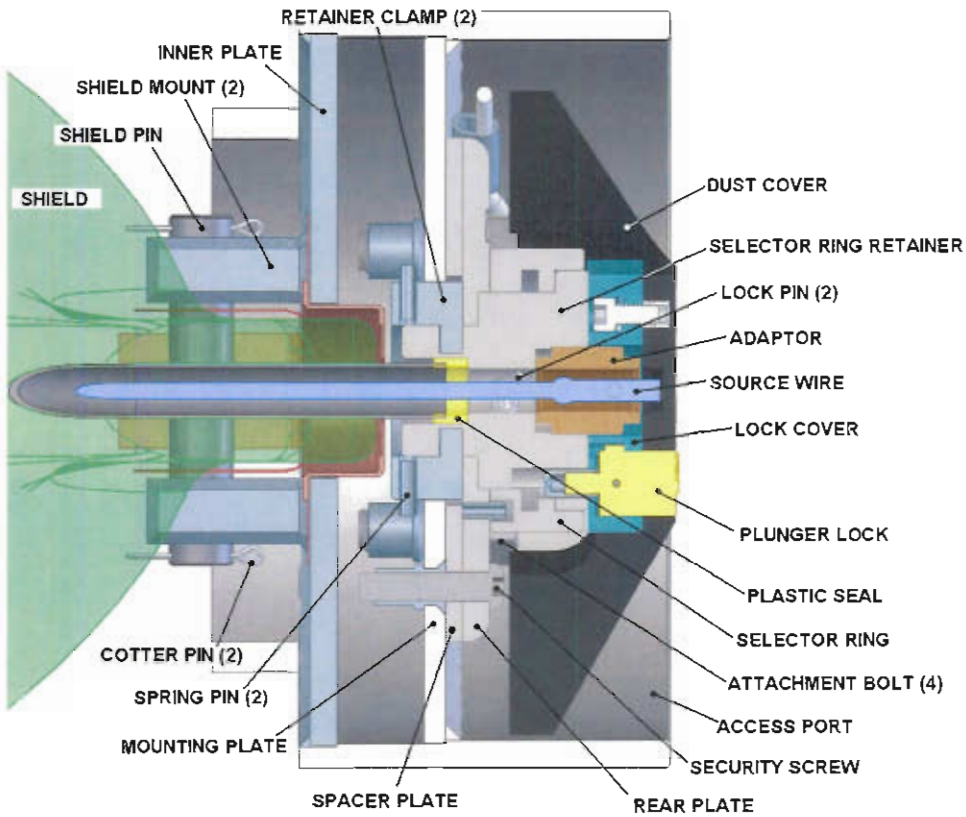

Figure 1.2e: Model 867 Lock Assembly Components

Each lock plate assembly is attached to the welded body with four (4) 1/2-13 UNC, 1½ inch long stainless steel hex head bolts (ASTM F593, Alloy Group 7, Grade 630 Condition AH) through either rivnuts or nut rings installed on the mounting plate.

All packages use a selector ring to change and indicate the safety state of the package. When the selector ring is rotated to the "LOCK" position, it securely holds the source wire assembly in place for transport. The Model Sentry 110 and Model Sentry 330 incorporate a lock slide in the lock mechanism to secure the source assembly in the package. The Model 867 lock assemblies use locking pins to hold the source assembly in the package. All lock assemblies incorporate a protective dust cover which secures over the end of the source assembly. Once the dust cover is attached, a plunger lock is engaged which prevents rotation of the selector ring and further secures the source in the package during transport.

1.2.1.4 *Front Plate Assembly*

The Model Sentry 110 and Model Sentry 330 incorporate a front plate assembly. (The Model 867 does not include a front plate assembly since it uses two lock assemblies). On the Model Sentry 110 and Sentry 330, the front plate assembly can be opened to allow the source wire to exit the package when used for industrial radiography or when loading/unloading the package. The front plate assembly is attached to the welded body with four (4) 1/2-13, 1½ inch long stainless steel hex head bolts through rivnuts (or nut rings) assembled into the body mounting plate.

The front plate assembly consists of a shielded port mechanism contained within the front plate. The mechanism can only be opened with a guide tube connector fitting inserted into the opening and rotated. A knob covers the port and blocks access to the port disc. The port shield and knob both block access to the source assembly in the Model Sentry 110 and Model Sentry 330 version packages (see Figure 1.2f).

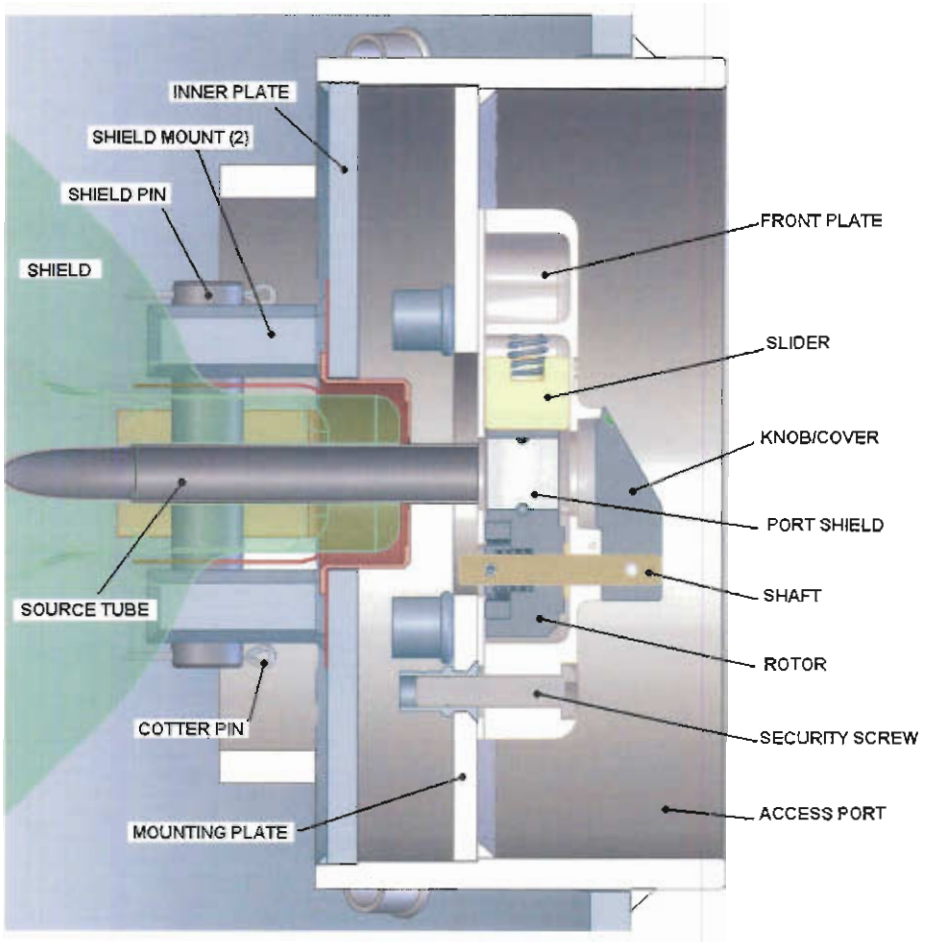

Figure 1.2f: Models Sentry 110 & Sentry 330 Front Plate Assembly Components

1.2.1.5 *Rib/Link Assemblies (Optional)*

The optional rib/link assemblies are bolted to the body weldment and also bolted/secured to each other. This assembly is intended to provide lifting attachments to aid package handling and securing during transport. The stainless steel rib sections include polyethylene or polyurethane plastic inserts.

Four rib assemblies are bolted to the top end of the package and another four rib assemblies are attached to the bottom. Three hex head bolts attach each rib assembly to the package, two bolts on the flat top or bottom surface and one bolt on the curved side surface.

Each link plate connects a set of upper and lower rib assemblies for load sharing capability when needed. Load pins, one at each end of the link plate, with fasteners secure the plates to the rib assemblies.

A heavy duty nut and bolt fits into the large hole of each link plate and rib assembly at the bottom of the package. These provide substantial load transfer capability from the upper to lower ribs.

The polyethylene (or polyurethane) plastic inserts fit into the center of each rib assembly to cover and protect the attachment bolts. Screws and washers are used to attach the inserts to the rib assemblies (see Appendix 1.3 drawings).

1.2.1.6 *Source Assemblies*

The Models Sentry 110, Sentry 330 and 867 Transport Packages are designed to transport special form capsules containing the isotopes listed in Table 1.2a. The source capsule, attached to a flexible steel wire, form the source wire assembly.

The Sentry 110 and Sentry 330 package designs can transport one source wire assembly. The Model 867 package design can transports up to two source wire assemblies.

All source wire assemblies consist of a special form source capsule crimped onto the end of a flexible steel wire. These source wire assemblies are secured in place in the package by the locking assemblies described in Section 1.2.1.3.

1.2.2 Contents

The Models Sentry 110, Sentry 330 and 867 Transport Packages are designed to transport special form capsules containing the isotopes listed in Table 1.2a.

The maximum decay heat for ^{60}Co in Table 1.2a is 5.5 Watts based on 330 Ci. The source assemblies are loaded into the transport package and secured according to the applicable procedure for the shield container (see Section 7).

The maximum weight of the contents for the shield containers is also listed in Table 1.2a. The content weight values are based on the weight of the full source wire assembly(ies) weights that can be transported in the package.

1.2.3 Special Requirements for Plutonium

Not applicable. This package is not used for the transportation of plutonium.

1.2.4 Operational Features

This package does not involve complex containment systems for source securement. The sources for these packages are all special form, welded capsules. The capsules are attached to flexible handling wires and held in place by lock mechanisms after the source wire assemblies are inserted into the shield tube(s).

1.3 Appendix

Figure 1.3a shows a sketch representative of the Standard Configuration Model Sentry 110, Model Sentry 330 and Model 867 package as prepared for transport. Figure 1.3b. shows a sketch representative of the Basic Configuration Model Sentry 110, Model Sentry 330 and Model 867 package as prepared for transport. Additional drawings of these transport packages are enclosed in this appendix.

Figure 1.3a Sketch of Standard Transport Configuration

Model Sentry 330, Model Sentry 110 and Model 867 Transport Packages - Standard Configuration

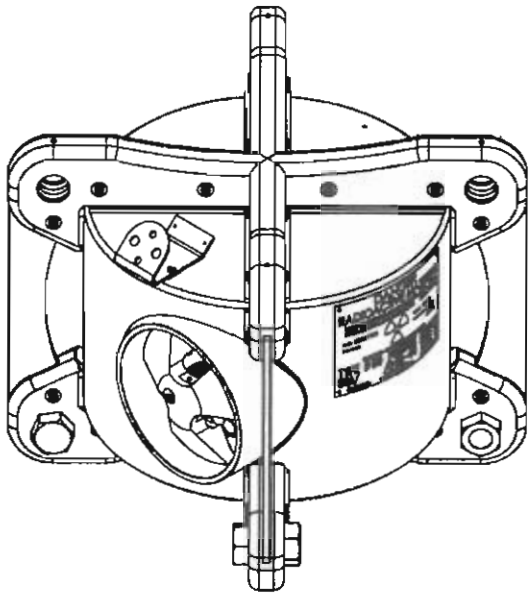

Figure 1.3b Sketch of Basic Transport Configuration

Model Sentry 330, Model Sentry 110 and Model 867 Transport Package - Basic Configuration

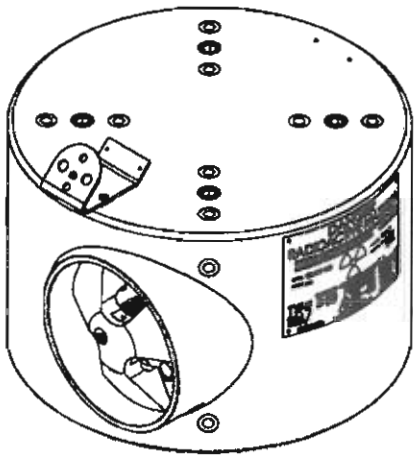

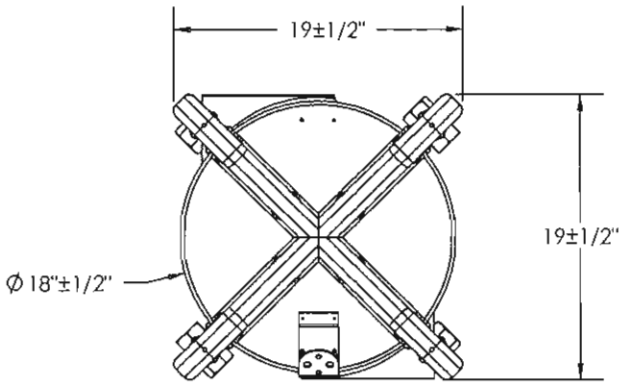

TOP VIEW

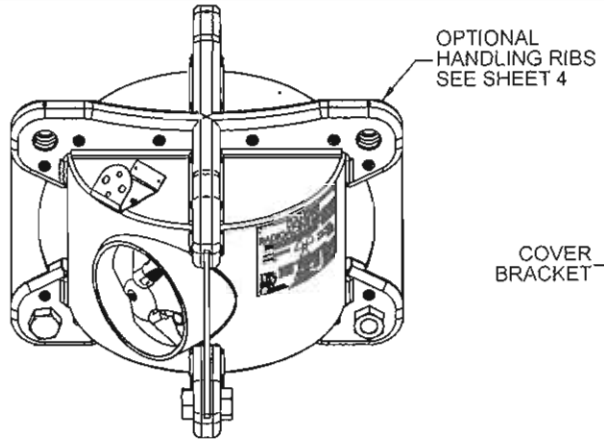

STANDARD CONFIGURATION

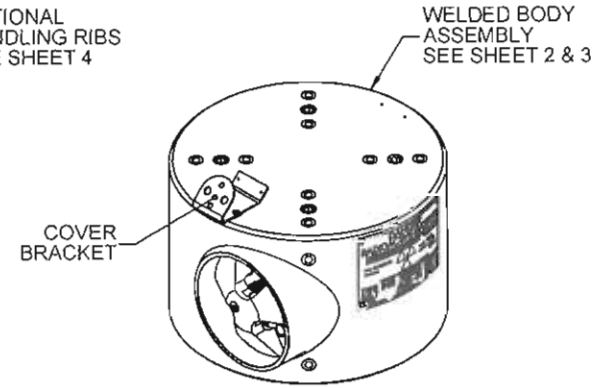

BASIC CONFIGURATION

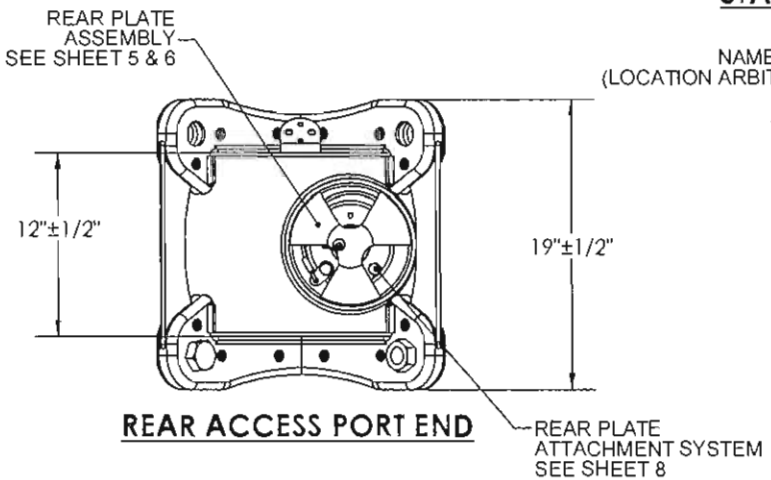

REAR ACCESS PORT END

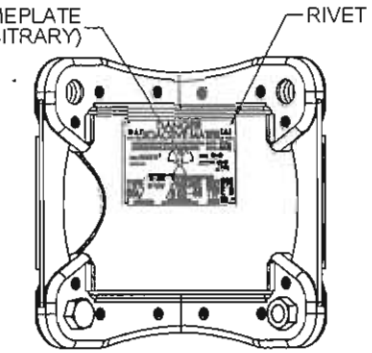

SIDE VIEW

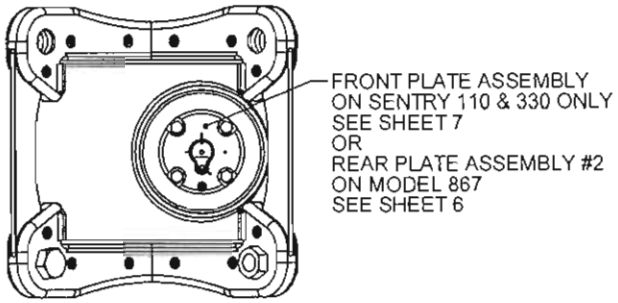

FRONT ACCESS PORT END

NOTES:
1. SOURCE(S) LOCATED NEAR THE GEOMETRIC CENTER OF PACKAGE (SEE SHEET 2).
2. SENTRY 110 & SENTRY 330 CONTAIN ONLY ONE SOURCE ASSEMBLY FOR TRANSPORT.
3. MODEL 867 CAN CONTAIN A MAXIMUM OF TWO SOURCE ASSEMBLIES FOR TRANSPORT.

PART NAME	QTY	MATERIAL
COVER BRACKET	1	
RIVET	8	TYPE 302/303/304/304L/316 STN STL
NAMEPLATE	2	

UNLESS OTHERWISE SPECIFIED:
ALL DIMENSIONS ARE INCHES & TOLERANCES ±1/16

MODEL NUMBER	MAX WEIGHT			MAXIMUM CAPACITY Co-60
	STANDARD CONFIG.	BASIC CONFIG.	DU SHIELD	
SENTRY 330	780 LBS.	700 LBS.	485 LBS.	330 CURIES
SENTRY 110	580 LBS.	500 LBS.	295 LBS.	110 CURIES
MODEL 867	780 LBS.	700 LBS.	485 LBS.	330 CURIES

ERF #	APPROVALS	DATE
2434	[illegible]	4 OCT 10
	[illegible]	14 Oct 10

QSA GLOBAL
40 NORTH AVE, BURLINGTON, MA 01803

DESCRIPTIVE DRAWING

TITLE: SENTRY TRANSPORT PACKAGE

SIZE: A | DWG. NO. R86000 | REV A

SCALE: NONE | SHEET 1 OF 9

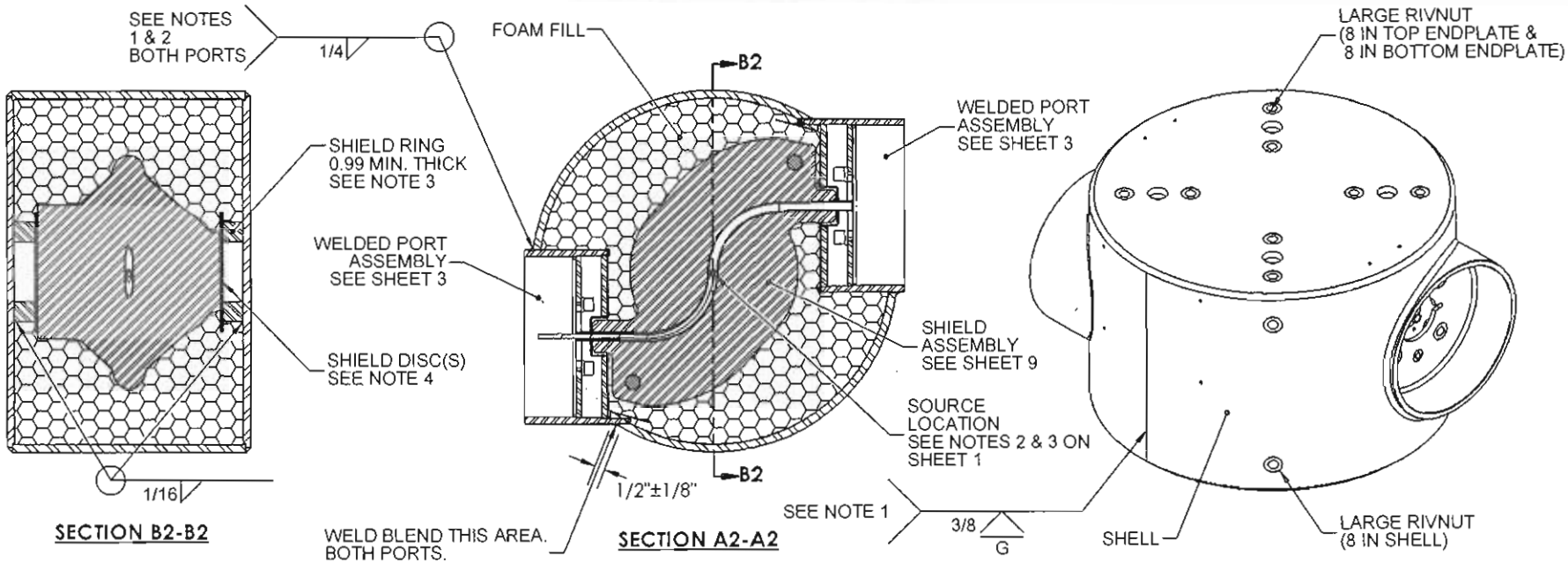

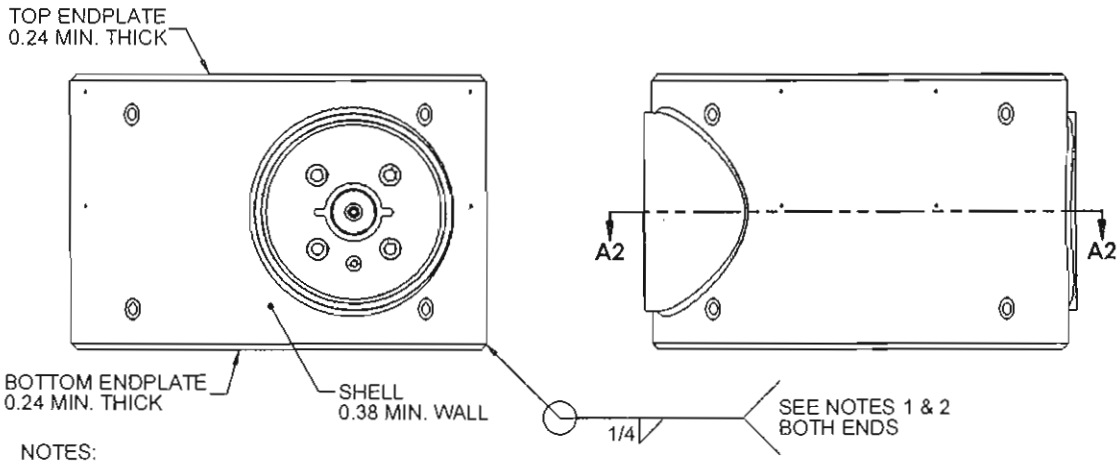

NOTES:

1. ALL WELDS ARE EITHER GTAW OR GMAW AND ARE PERFORMED AND INSPECTED BY PERSONNEL QUALIFIED IN ACCORDANCE WTH AWS D1.6:1999 STRUCTURAL WELDING CODE - STAINLESS STEEL OR CERTIFIED TO ASME BOILER AND PRESSURE VESSEL CODE SECTION V111 DIV1.
2. ALL WELDS ARE VISUALLY INSPECTED BY INSPECTORS QUALIFIED TO ASNT SNT-TC-1A REQUIREMENTS.
3. SHIELD RING USED FOR SENTRY 110 (NOT SENTRY 330 OR MODEL 867).
4. COPPER DISC(S) OR SHEET USED AT ALL URANIUM/STEEL INTERFACES.

WELDED BODY ASSEMBLY
ALL TRANSPORT PACKAGE CONFIGURATIONS

PART NAME	QTY	MATERIAL
SHIELD ASSEMBLY	REF	SEE SHEET9
WELDED PORT ASSEMBLY	REF	SEE SHEET 3
LARGE RIVNUT	32	NAS 1330N8E-326. TYPE 316/316L STN STL.
FOAM FILL	AR	POLYURETHANE, 20 LBS PER CUBIC FOOT
SHIELD DISC	AR	ANY COPPER ALLOY
SHIELD RING	2	TYPE 304/304L STN STL PER ASTM A511 ANNEALED CONDITION, PASSIVATED.
BOTTOM ENDPLATE	1	TYPE 304/304L STN STL PER ASTM A240, A480, A276 OR A666 ANNEALED CONDITION, PASSIVATED OR ELECTROPOLISHED.
TOP ENDPLATE	1	
SHELL	1	

UNLESS OTHERWISE SPECIFIED:
ALL DIMENSIONS ARE INCHES & TOLERANCES ±1/16

QSA GLOBAL
40 NORTH AVE, BURLINGTON, MA 01803

DESCRIPTIVE DRAWING

TITLE: SENTRY TRANSPORT PACKAGE

SIZE	DWG. NO.	REV
A	R86000	A
	SCALE: NONE	SHEET 2 OF 2

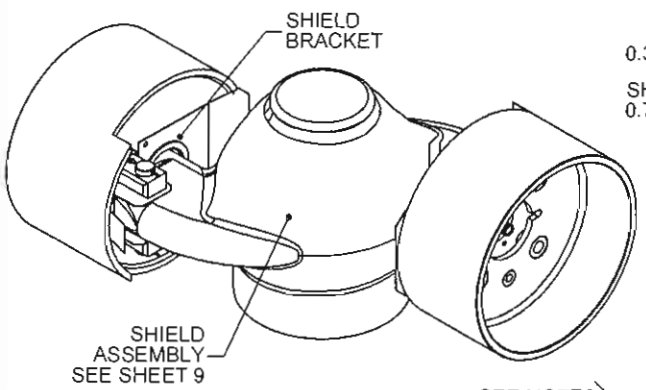

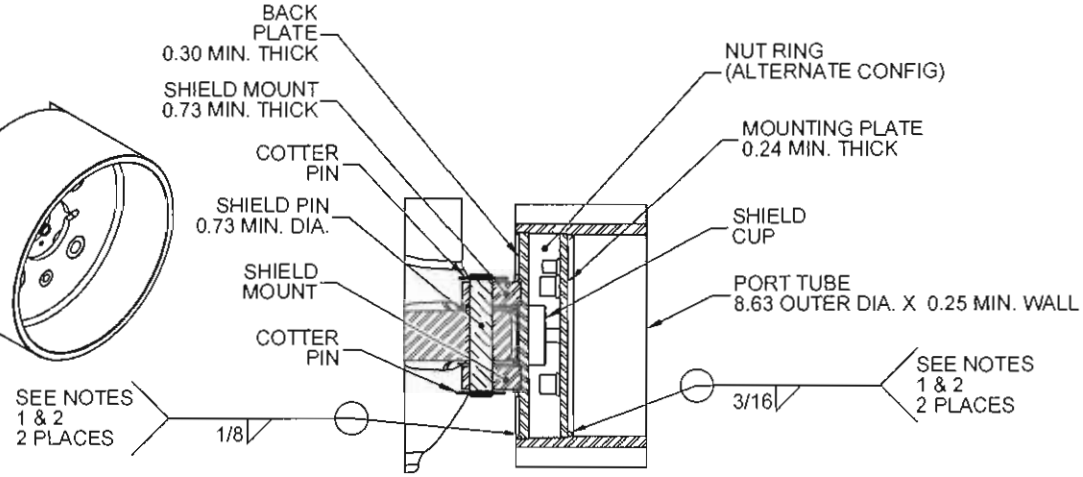

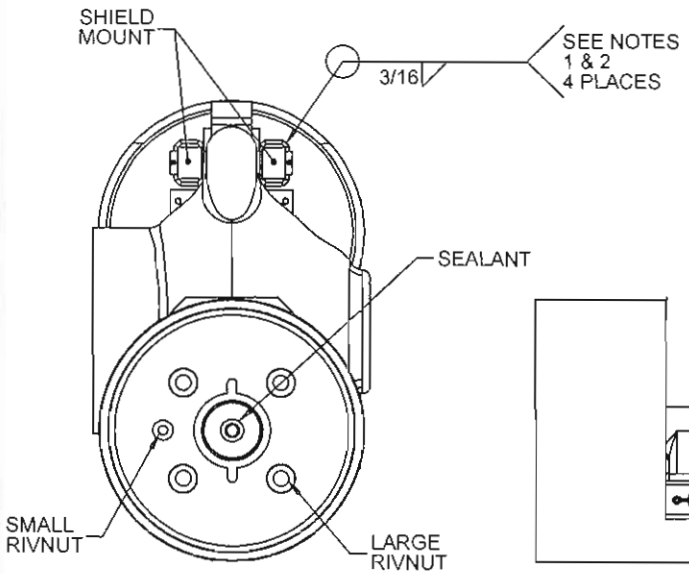

SECTION A3-A3

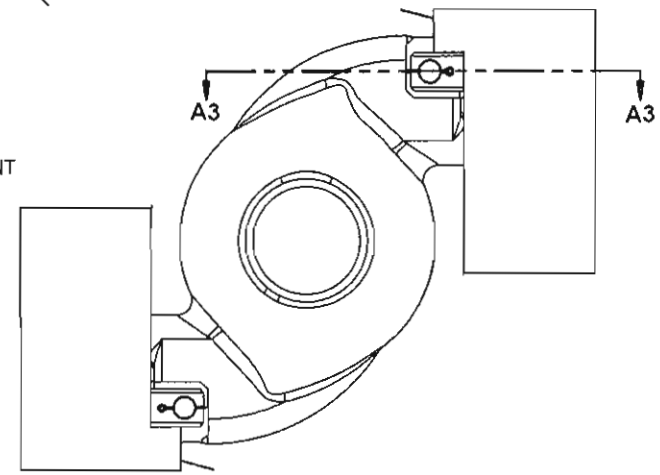

PART NAME	QTY	MATERIAL
SHIELD ASSEMBLY	REF	SEE SHEET 9
SMALL RIVNUT	REF	SEE SHEET 8
LARGE RIVNUT	REF	
NUT RING	REF	
SEALANT	AR	POLYURETHANE ELASTOMER
COTTER PIN	4	TYPE 302/303/304/304L/316 STN STL
SHIELD BRACKET	2	ANY COPPER ALLOY
SHIELD CUP	2	
SHIELD PIN	2	TYPE 6AL-4V TITANIUM PER ASTM B348 GRADE 5.
SHIELD MOUNT	4	TYPE 304/304L STN STL PER ASTM A240, A480, A276, OR A666 ANNEALED CONDITION. PASSIVATED OR ELECTROPOLISHED.
BACK PLATE	2	
MOUNTING PLATE	2	
PORT TUBE	2	

UNLESS OTHERWISE SPECIFIED:
ALL DIMENSIONS ARE INCHES & TOLERANCES ±1/16

NOTES:

1. ALL WELDS ARE EITHER GTAW OR GMAW AND ARE PERFORMED AND INSPECTED BY PERSONNEL QUALIFIED IN ACCORDANCE WITH AWS D1.6:1999 STRUCTURAL WELDING CODE - STAINLESS STEEL.
2. ALL WELDS ARE VISUALLY INSPECTED BY INSPECTORS QUALIFIED TO ASNT SNT-TC-1A REQUIREMENTS.

WELDED PORT ASSEMBLY

ALL TRANSPORT PACKAGE CONFIGURATIONS

QSA GLOBAL

40 NORTH AVE, BURLINGTON, MA 01803

DESCRIPTIVE DRAWING

TITLE SENTRY TRANSPORT PACKAGE

SIZE	DWG. NO.	REV
A	R86000	A
	SCALE: NONE	SHEET 3 OF 9

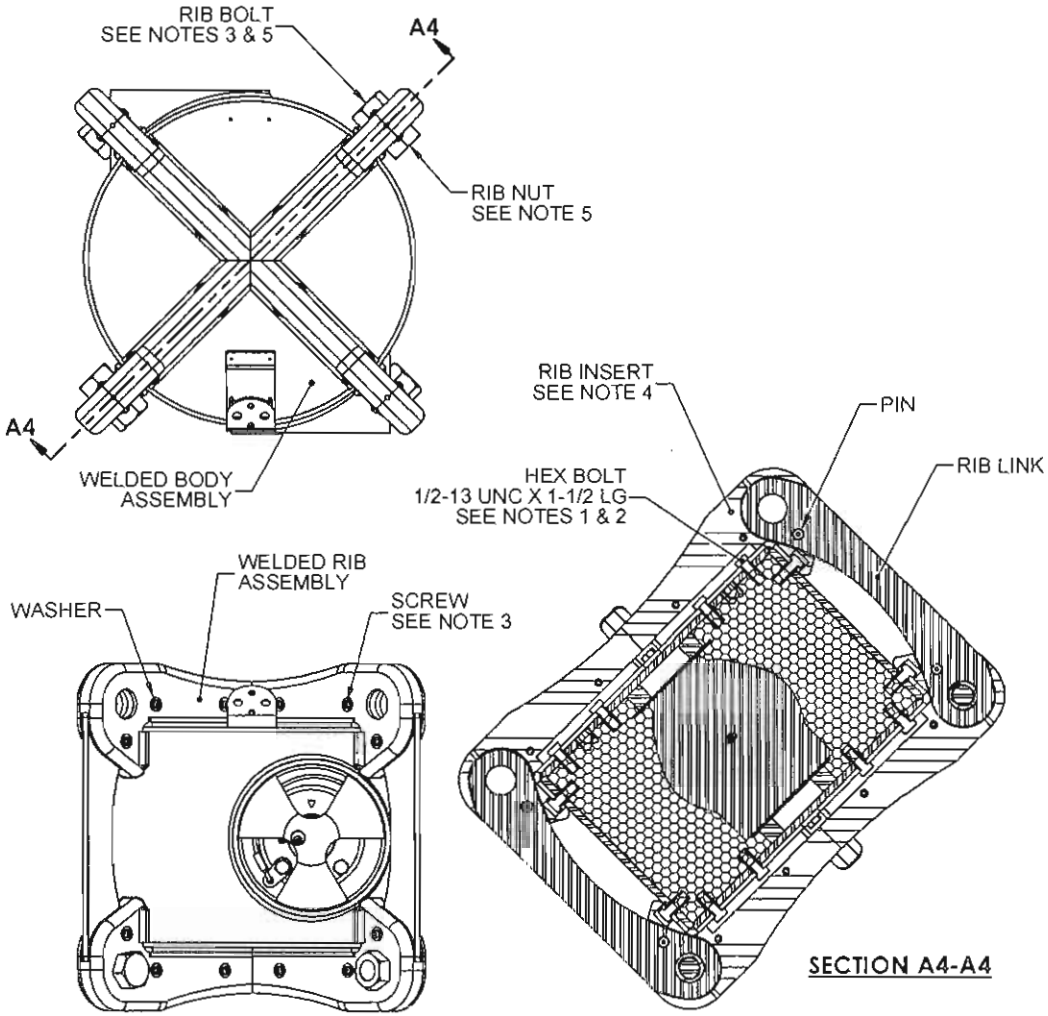

NOTES:

1. THREAD LUBRICANT APPLIED TO HEX BOLTS.
2. ALL HEX BOLTS TIGHTENED TO 70+/-6 FT-LBS.
3. THREAD LOCKER APPLIED TO ALL SCREWS & RIB BOLTS.
4. RIB INSERTS CAN EITHER BE 8 WHOLE OR 16 SPLIT HALVED COMPONENTS.
5. ORIENTATION OF RIB BOLT AND RIB NUT IS ARBITRARY.

OPTIONAL HANDLING RIB ASSEMBLY

STANDARD TRANSPORT PACKAGE CONFIGURATIONS

PART NAME	QTY	MATERIAL
WELDED BODY ASSEMBLY	REF	SEE SHEET 2
THREAD LUBRICANT	AR	ALUMINUM, COPPER & GRAPHITE BLEND
THREAD LOCKER	AR	DIMETHACRYLATE ESTER
RIB INSERT	8	POLYETHYLENE OR POLYURETHANE
WASHER	48	TYPE 302/303/304/304L/316/17-4 PH STN STL
SCREW	48	TYPE 316 STN STL
HEX BOLT	24	TYPE 17-4 PH STN STL
RIB NUT	4	TYPE 302/303/304/304L/316 STN STL
RIB BOLT	4	
PIN	8	TYPE 17-4 PH STN STL
RIB LINK	4	
WELDED RIB ASSEMBLY	8	

UNLESS OTHERWISE SPECIFIED:
ALL DIMENSIONS ARE INCHES & TOLERANCES ±1/16

QSA GLOBAL
40 NORTH AVE, BURLINGTON, MA 01803

DESCRIPTIVE DRAWING

TITLE SENTRY TRANSPORT PACKAGE

SIZE	DWG. NO.	REV
A	R86000	A
	SCALE: NONE	SHEET 4 OF 9

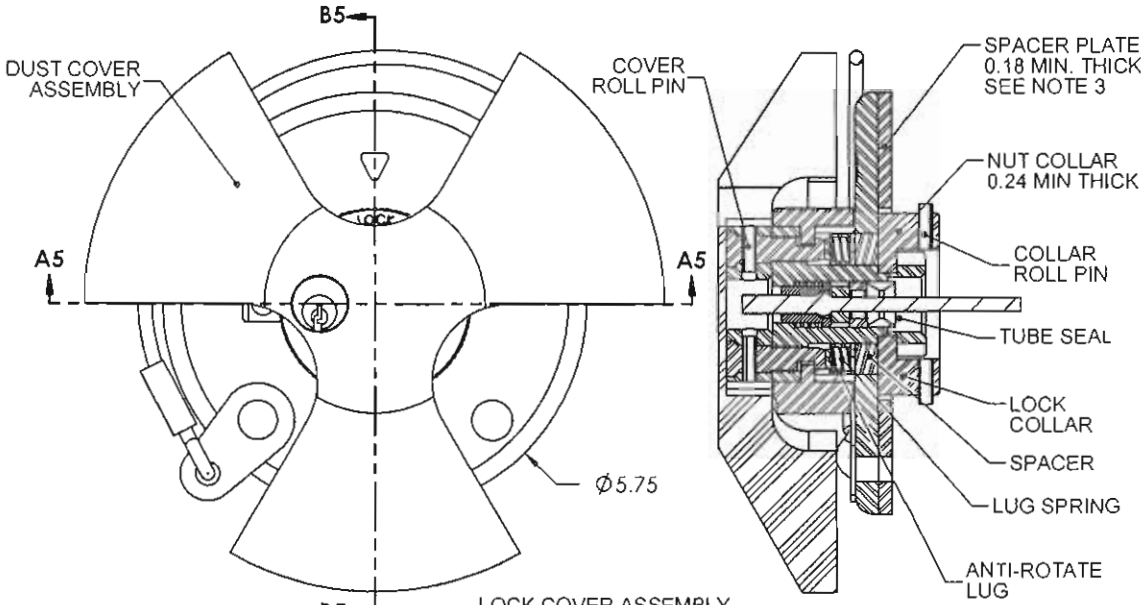

SECTION B5-B5

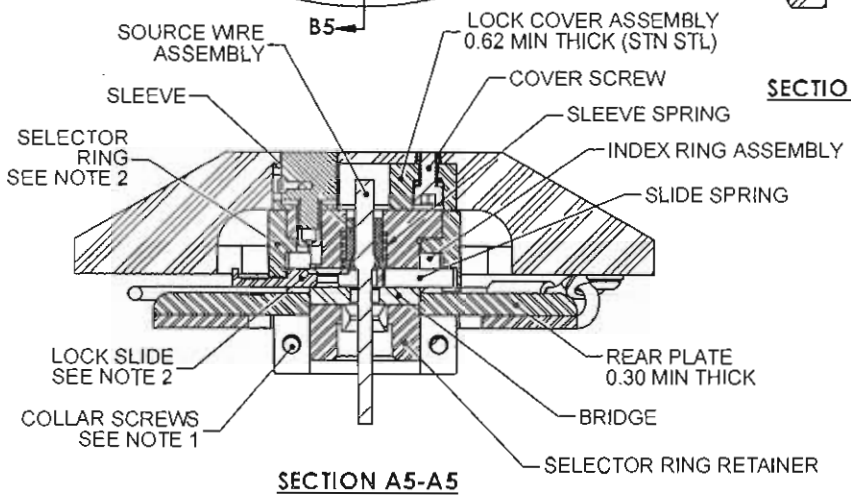

SECTION A5-A5

NOTES:

1. THREAD LOCKER APPLIED TO COLLAR SCREWS.
2. LUBRICANT APPLIED TO SELECTOR RING & LOCK SLIDE.
3. SPACER PLATE USED ON SENTRY 330 AND NOT ON SENTRY 110.

PART NAME	QTY	MATERIAL
SOURCE WIRE ASSEMBLY	REF	MODEL 424-13, -14 OR EQUIVALENT
LUBRICANT	AR	GREASE PER MIL-PRF-23827C
THREAD LUBRICANT	AR	ALUMINUM, COPPER & GRAPHITE BLEND
THREAD LOCKER	AR	DIMETHACRYLATE ESTER
LUG SPRING	2	MUSIC WIRE PER ASTM A228
TUBE SEAL	1	POLYETHYLENE OR POLYURETHANE
COVER SCREW	3	TYPE 302/303/304/304L/316 STN STL
LOCK COVER ASSEMBLY	1	BRASS & 302/303/304/304L/316 STN STL
DUST COVER ASSEMBLY	1	POLYETHLENE & 302/303/304/304L/316 STN STL
SLEEVE SPRING	1	MUSIC WIRE PER ASTM A228
SLIDE SPRING	1	TYPE 301/302/304/316 STN STL PER ASTM A313 OR A666
COLLAR SCREW	6	ASTM F837 GROUP1 CONDITION CW1 STN STL
COLLAR ROLL PIN	2	ASME B18.8.2, SAE 30302 OR 30304 STN STL
COVER ROLL PIN	2	
INDEX RING ASSEMBLY	1	TYPE 304/304L STN STL PER ASTM A276, A479, A240 OR A666 CONDITION-A EITHER HOT OR COLD FINISHED. PASSIVATED OR ELECTROPOLISHED.
SPACER	2	
SPACER PLATE	1	
BRIDGE	1	
SELECTOR RING	1	TYPE 302/303/304/304L/316 STN STL
LOCK SLIDE	1	TYPE 17-4 PH STN STL PER ASTM A564
SLEEVE	1	TUNGSTEN PER ASTM B777 CLASS 1, NICKEL PLATED
LOCK COLLAR	1	TYPE 304/304L STN STL PER ASTM A276, A479, A240 OR A666 CONDITION-A EITHER HOT OR COLD FINISHED. PASSIVATED OR ELECTROPOLISHED.
NUT COLLAR	1	
SELECTOR RING RETAINER	1	
REAR PLATE	1	

UNLESS OTHERWISE SPECIFIED:
ALL DIMENSIONS ARE INCHES & TOLERANCES ±1/16

QSA GLOBAL
40 NORTH AVE, BURLINGTON, MA 01803

DESCRIPTIVE DRAWING

TITLE SENTRY TRANSPORT PACKAGE

SIZE A | DWG. NO. R86000 | REV A | SCALE: NONE | SHEET 5 OF 9

SENTRY 110 & 330 REAR PLATE ASSEMBLY

NOT USED ON MODEL 867 TRANSPORT PACKAGE

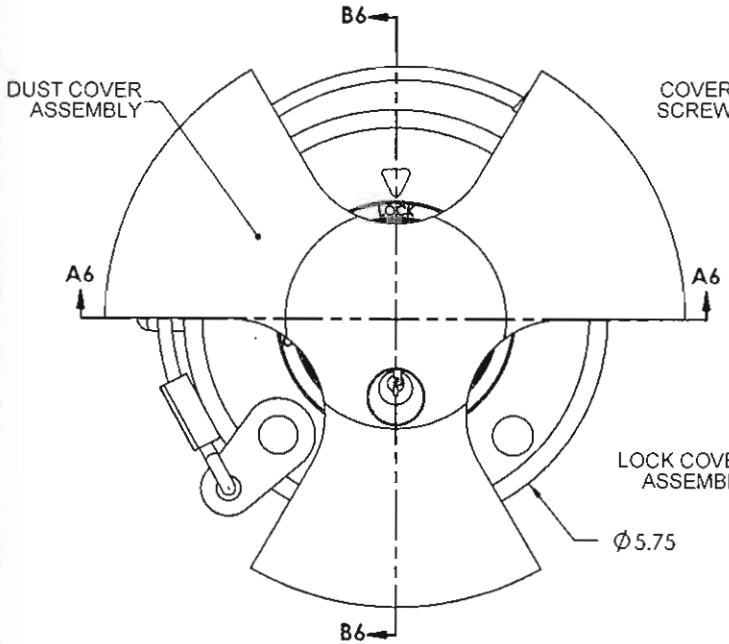

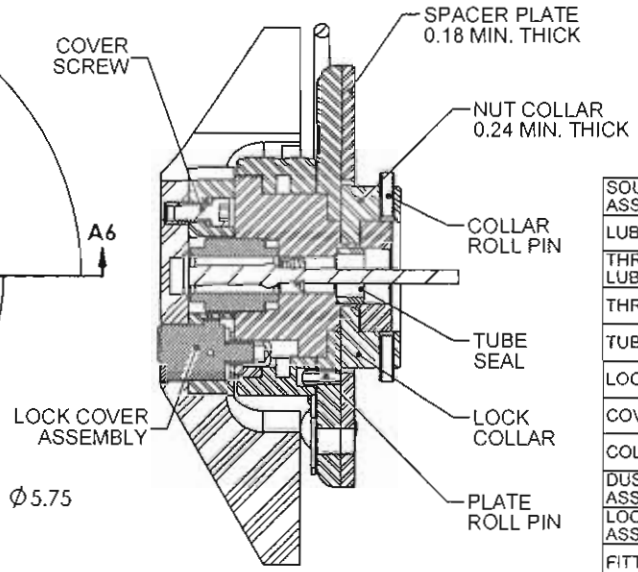

SECTION B6-B6

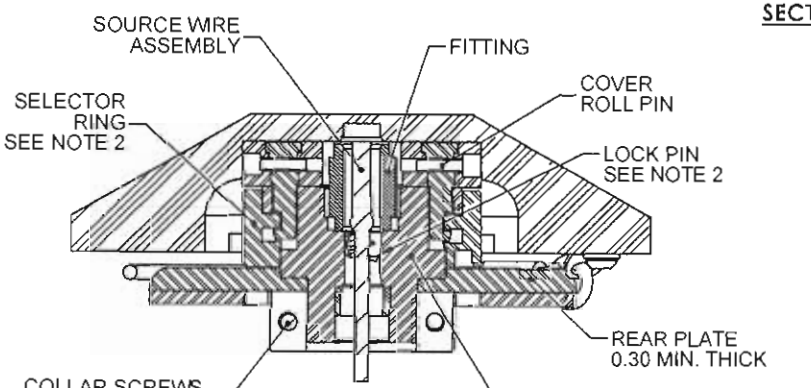

SECTION A6-A6

NOTES:

1. THREAD LOCKER APPLIED TO COLLAR SCREWS.
2. LUBRICANT APPLIED TO SELECTOR RING & LOCK PINS.

PART NAME	QTY	MATERIAL
SOURCE WIRE ASSEMBLY	REF	MODEL 424-13, -14 OR EQUIVALENT
LUBRICANT	AR	GREASE PER MIL-PRF-23827C
THREAD LUBRICANT	AR	ALUMINUM, COPPER & GRAPHITE BLEND
THREAD LOCKER	AR	DIMETHACRYLATE ESTER
TUBE SEAL	2	POLYETHYLENE OR POLYURETHANE
LOCK PIN SPRING	4	TYPE 301/302/304/316 STN STL PER ASTM A313 OR A666
COVER SCREW	6	TYPE 302/303/304/304L/316 STN STL
COLLAR SCREW	12	ASTM F837 GROUP1 CONDITION CW1 STN STL
DUST COVER ASSEMBLY	2	POLYETHLENE & LOCK COVER ASSEMBLY
LOCK COVER ASSEMBLY	2	BRASS & TYPE 302/303/304/304L/316 STN STL
FITTING	2	BRASS
PLATE ROLL PIN	2	ASME B18.8.2, SAE 51420 STN STL
COVER ROLL PIN	4	ASME B18.8.2, SAE 30302 OR 30304 STN STL
COLLAR ROLL PIN	4	
LOCK PIN	4	TYPE O-1 OR A-2 TOOL STEEL PER ASTM A681 HARDENED TO 50-55 Rc
SPACER PLATE	2	TYPE 304/304L STN STL PER ASTM A276, A479, A240 OR A666 CONDITION-A EITHER HOT OR COLD FINISHED. PASSIVATED OR ELECTROPOLISHED.
SELECTOR RING	2	
LOCK COLLAR	2	
NUT COLLAR	2	
SELECTOR RING RETAINER	2	
REAR PLATE	2	

UNLESS OTHERWISE SPECIFIED:
ALL DIMENSIONS ARE INCHES & TOLERANCES ±1/16

QSA GLOBAL
40 NORTH AVE, BURLINGTON, MA 01803

DESCRIPTIVE DRAWING

TITLE SENTRY TRANSPORT PACKAGE

SIZE A | DWG. NO. R86000 | REV A
SCALE: NONE | SHEET 6 OF 9

MODEL 867 REAR PLATE ASSEMBLY

NOT USED ON SENTRY 110 OR 330 TRANSPORT PACKAGE

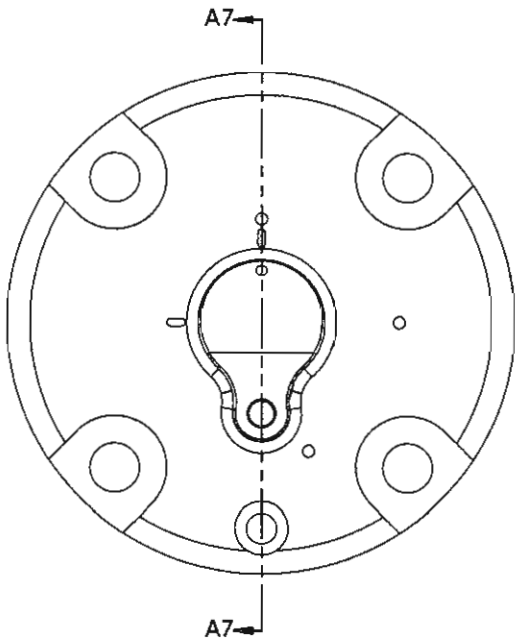

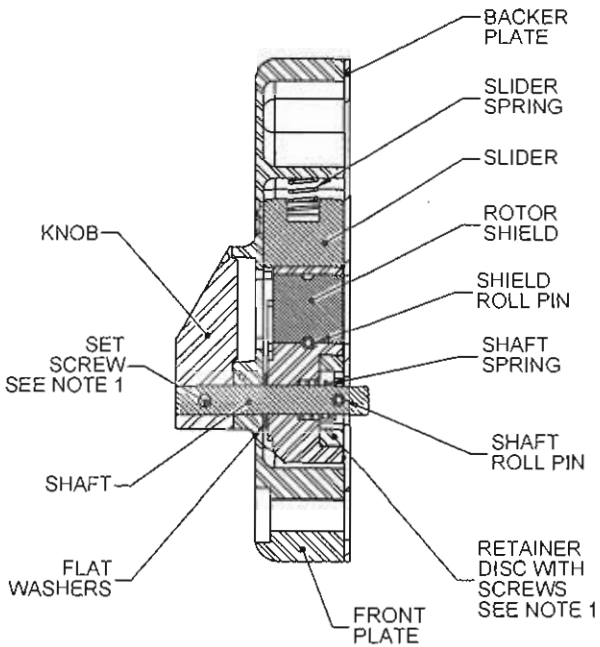

SECTION A7-A7

PART NAME	QTY	MATERIAL
THREAD LOCKER	AR	DIMETHACRYLATE ESTER
ROTOR SHIELD	1	TUNGSTEN
SLIDER SPRING	1	TYPE 301/302/304/316 STN STL
FLAT WASHER	2	BRASS
SLIDER	1	
SHAFT	1	SILICON BRONZE
RETAINER SCREW	2	TYPE 302/303/304/304L/316/316L STN STL
SET SCREW	1	
SHAFT ROLL PIN	1	
SHIELD ROLL PIN	1	
SHAFT SPRING	1	
BACKER PLATE	1	
RETAINER DISC	1	
KNOB	1	
ROTOR	1	
FRONT PLATE	1	

NOTES:

1. THREAD LOCKER APPLIED TO SET SCREW & RETAINER DISC SCREWS.

FRONT PLATE ASSEMBLY

MODEL 110 &MODEL 330 TRANSPORT PACKAGE CONFIGURATIONS ONLY (NOT MODEL 867)

UNLESS OTHERWISE SPECIFIED:
ALL DIMENSIONS ARE INCHES & TOLERANCES ±1/16

QSA GLOBAL
40 NORTH AVE, BURLINGTON, MA 01803

DESCRIPTIVE DRAWING

TITLE SENTRY TRANSPORT PACKAGE

SIZE A | DWG. NO. R86000 | REV A

SCALE: NONE | SHEET 7 OF 9

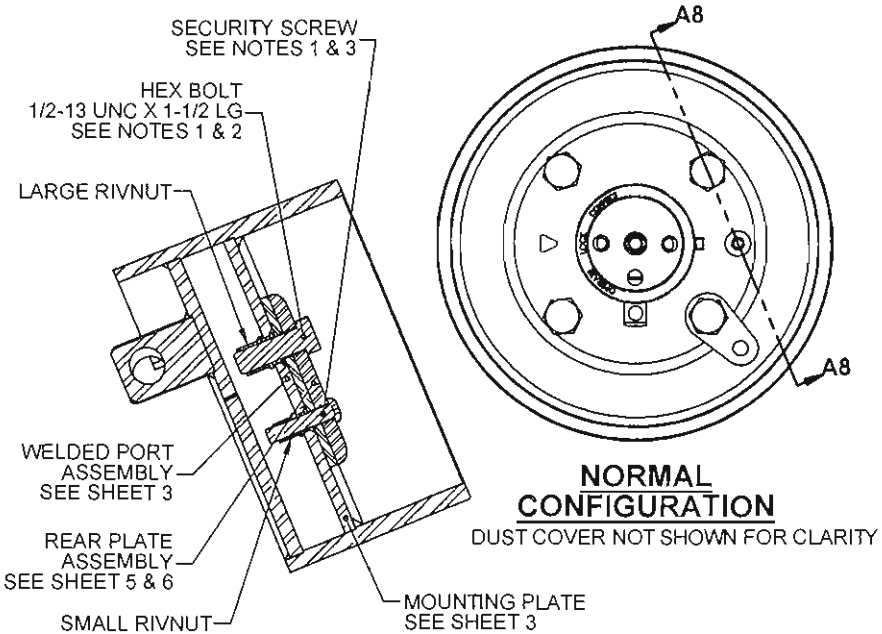

SECTION A8-A8

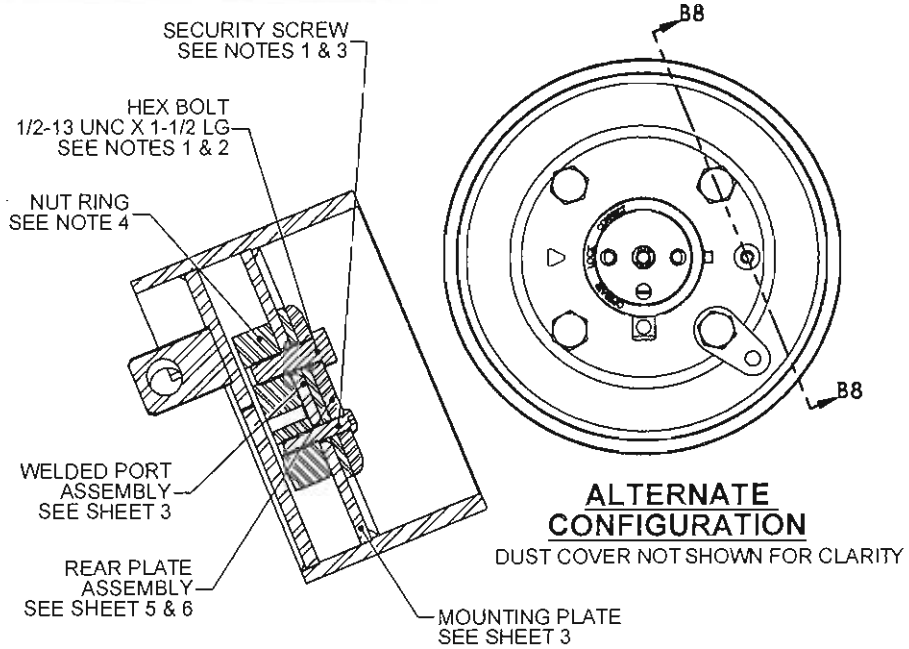

SECTION B8-B8

PART NAME	QTY	MATERIAL
REAR PLATE ASSEMBLY	REF	SEE SHEETS 5 & 6
WELDED PORT ASSEMBLY	REF	SEE SHEET 3
THREAD LUBRICANT	AR	ALUMINUM, COPPER & GRAPHITE BLEND
SMALL RIVNUT	1	TYPE 302/303/304/304L/316/316L STN STL
SECURITY SCREW	1	
NUT RING	1	TYPE 304/304L STN STL PER ASTM A240, A480, A276 OR A666 ANNEALED CONDITION. PASSIVATE OR ELECTROPOLISH
LARGE RIVNUT	4	NAS 1330N8E-326. TYPE 316/316L STN STL PER ASTM A493 OR A276
HEX BOLT	4	TYPE 17-4 PH STN STL PER ASTM F593 OR GRADE 660 CLASS D PER ASTM A453

NOTES:

1. THREAD LUBRICANT APPLIED TO HEX BOLTS & SECURITY SCREW.
2. HEX BOLT TIGHTENED TO 70 +/- 6 FT-LBS.
3. SECURITY SCREW TIGHTENED TO 110 +/- 5 IN-LBS.
4. ALTERNATE CONFIGURATION USES NUT RING IN PLACE OF RIVNUTS.
5. FRONT PLATE USES SAME ATTACHMENT SYSTEM AS REAR PLATE.

REAR PLATE ATTACHMENT SYSTEM

ALL TRANSPORT PACKAGE CONFIGURATIONS

UNLESS OTHERWISE SPECIFIED:
ALL DIMENSIONS ARE INCHES & TOLERANCES ±1/16

QSA GLOBAL

40 NORTH AVE, BURLINGTON, MA 01803

DESCRIPTIVE DRAWING

TITLE **SENTRY TRANSPORT PACKAGE**

SIZE	DWG. NO.	REV
A	R86000	A
	SCALE: NONE — SHEET 8 OF 9	

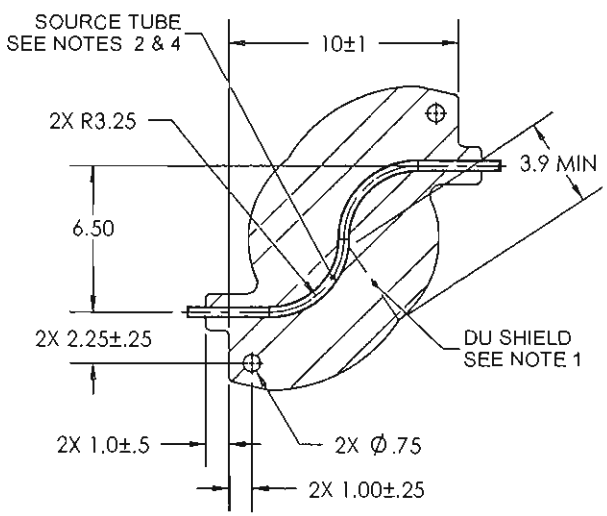

SECTION A9-A9

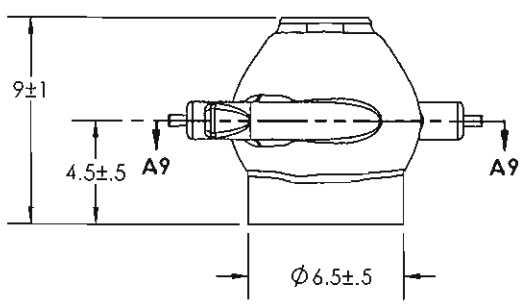

SENTRY 110

MAXIMUM DU WEIGHT: 295 LBS.

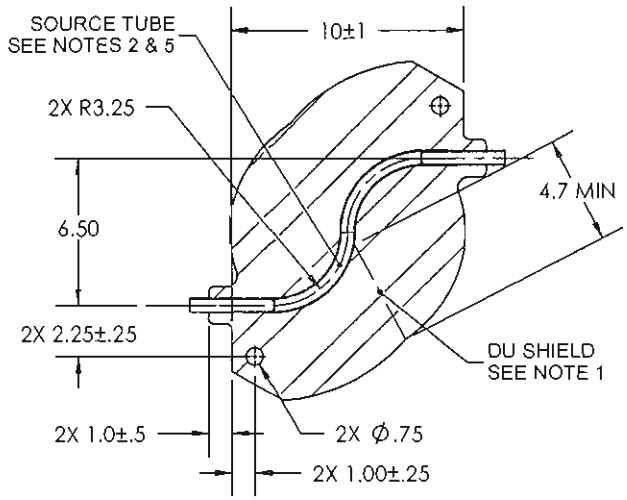

SECTION B9-B9

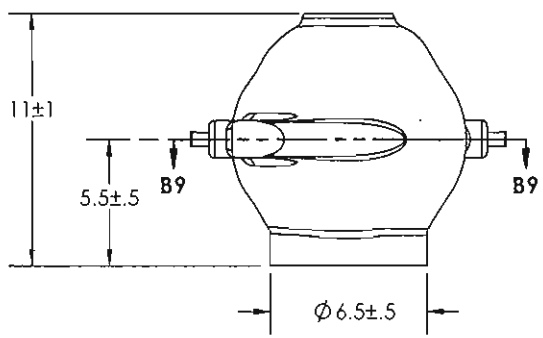

SENTRY 330

MAXIMUM DU WEIGHT: 485 LBS.

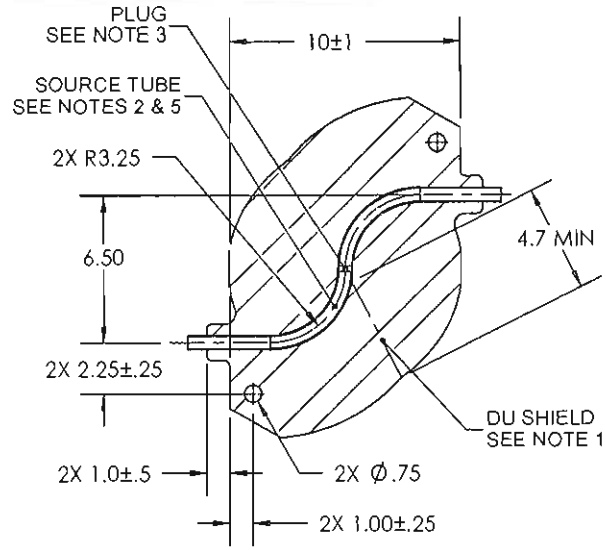

SECTION C9-C9

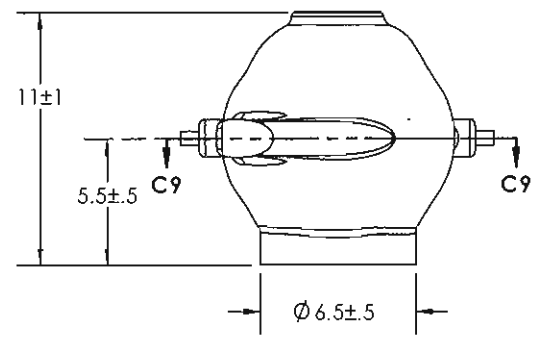

MODEL 867

MAXIMUM DU WEIGHT: 485 LBS.

NOTES:

1. SHIELD MATERIAL: 99% DEPLETED URANIUM (DU) CASTING.
2. SOURCE TUBE MATERIAL: 3AL-2.5V TITANIUM ALLOY.
3. PLUG MATERIAL: 3AL-2.5V TITANIUM ALLOY.
4. SENTRY 110 SOURCE TUBE SIZE: 0.47 OD X .04 WALL
5. SENTRY 330 & MODEL 867 SOURCE TUBE SIZE: 0.63 OD X .04 WALL

DEPLETED URANIUM (DU) SHIELD ASSEMBLIES

UNLESS OTHERWISE SPECIFIED:
ALL DIMENSIONS ARE INCHES & TOLERANCES ±1/16

QSA GLOBAL
40 NORTH AVE, BURLINGTON, MA 01803

DESCRIPTIVE DRAWING

TITLE SENTRY TRANSPORT PACKAGE

SIZE	DWG. NO.	REV
A	R86000	A
	SCALE: NONE — SHEET 9 OF 9	

Section 2 - STRUCTURAL EVALUATION

This section identifies and describes the principal structural design of the packaging, components, and systems important to safety. In addition, this section describes how the package complies with the performance requirements of 10 CFR Part 71 and TS-R-1.

2.1 Description of Structural Design

2.1.1 Discussion

The Models Sentry 110, Sentry 330 and 867 Transport Packages are described in Section 1.2.

2.1.2 Design Criteria

The Models Sentry 110, Sentry 330 and 867 Transport Packages are designed to comply with the requirements for Type B(U) packaging as prescribed by 10 CFR 71 and IAEA No. TS-R-1 (ST-1, Revised) 1996 Edition (Revised). All design criteria are evaluated by a straightforward application of the appropriate section of 10 CFR 71 or IAEA No. TS-R-1 (ST-1, Revised) 1996 Edition (Revised).

In addition to the transport design criteria, the Model Sentry 110 and Sentry 330 transport packages are designed to meet the performance requirements for industrial radiography devices in ANSI N432-1980 and ISO 3999:2004(E).

2.1.3 Weight and Centers of Gravity

Table 1.2a includes the weight of each transport package described in this SAR in its specific configuration. The center of gravity is at the geometric center of the welded body for all the packages covered under this SAR.

2.1.4 Identification of Codes and Standards for Package Design

See Section 2.1.2 relating to design criteria of the package. Any applicable, specific codes or standards related to the finished assemblies for these transport packages are specified on the drawings contained in Section 1.3. All component fabrication (including assembly) is controlled under the QSA Global, Inc. Quality Assurance Plan approved by the USNRC and ISO. All welding under this plan adheres to the standards referenced on the drawings in Section 1.3. All hardware meets the standards referenced on the drawings in Section 1.3. All external fabrication deemed critical to safety is either verified to equivalent in-house standards or dedicated as appropriate for use prior to release as part of this transport package.

In general, the design was based on the Type A and Type B(U) container requirements of 49 CFR, 10 CFR 71 and IAEA regulations as identified in Section 1.1.

2.2 Materials

2.2.1 Material Properties and Specifications

Table 2.2a lists the relevant mechanical properties (at ambient temperature) of the principal materials used in the Models Sentry 110, Sentry 330 and 867 Transport Packages.

Table 2.2a: Mechanical Properties of Principal Transport Package Materials

Material	Form	Specification	Condition	Tensile Strength, minimum (KSI)	Yield Strength, minimum (KSI)	Elongation (% in 2 in) *(% in 4 D)
Stainless Steel 17-4 PH	Fastener	ASTM F593	AH	135	105	*16
Stainless Steel 17-4 PH	Plate	ASTM A693	H900	190	170	8
Stainless Steel 17-4 PH	Plate	ASTM A693	H925	170	155	8
Stainless Steel 17-4 PH	Plate	ASTM A693	H1025	155	145	8
Stainless Steel 17-4 PH	Plate	ASTM A564	H900	190	170	10
Stainless Steel 316/316L	Fastener	ASTM F879	CW	70	25	30
Stainless Steel 316/316L	Bar	ASTM A276	Annealed	75	30	30
Stainless Steel 304/304L	Plate	ASTM A240	Annealed	70	25	40
Stainless Steel 304/304L	Tube	ASTM A511	Annealed	70	25	30
Stainless Steel 303	Bar	ASTM A582	Annealed	70	20	40
Titanium TI 6AL-4V	Bar	ASTM B348	Grade 5	130	120	*10
Titanium TI 3AL-2.5V	Tube	ASTM B861	Grade 9	90	70	15
Tungsten 90%W	Bar	ASTM B777	Class 1	110	75	5
Depleted Uranium U-0.75% Ti	Casting	NA	NA	165	123	24
Brass Alloy 485	Bar	NA	NA	23	10	NA
Copper Alloy 110	Sheet/Bar	NA	NA	30	4	NA
Silicon Bronze Alloy 655	Bar	ASTM B98	NA	NA	NA	NA
Polyethylene (UHMW)	Plate	NA	NA	NA	NA	NA
Polyurethane	Plate	NA	NA	NA	NA	NA
Polyurethane	Rigid Foam	NA	NA	NA	NA	NA

2.2.2 Chemical, Galvanic or Other Reactions

Except for depleted uranium (DU) and titanium, the materials used in the construction of these packages, shown in Table 2.2a, are relatively close in terms of galvanic potential as shown on MIL-STD-889 Table II. Their close proximity on the galvanic table indicates the galvanic reaction between these materials will be negligible.

DU is located near the active (anodic) end of the table while titanium is located towards the passive (cathodic) end. Possible galvanic reaction between these two materials is expected but will not be significant for the following reasons:

- The large area and mass of DU (anodic) material relative to the titanium (cathodic) material reduces the current potential between the two materials.
- The polyurethane foam surrounding the DU material along with the elastomer seal around the shield source tube exit port prevents the potential for an electrolyte or other corrosive medium from contacting the DU and titanium interface.

A copper separator or barrier is used in between all DU and stainless steel interfaces to prevent the possibility of eutectic alloying during the fire test of the Hypothetical Accident Condition requirements defined in 10 CFR 71.73 (c) (4).

Lubricants, sealants, and other chemicals ingredients used in the SENTRY transport package are reviewed to ensure they do not contain halides (typically chloride) which could cause unexpected corrosion within the package under normal transport and hypothetical accident conditions.

With this construction there will be no significant chemical or galvanic reaction between package components during normal or hypothetical accident conditions of transport.

2.2.3 Effects of Radiation on Materials

The materials listed in Table 2.2a have been used in transport packaging for decades without degradation of the package performance over time.

2.3 Fabrication and Examination

2.3.1 Fabrication

Package components are procured, manufactured and inspected for use under QSA Global, Inc. NRC approved QA Program Number 0040. All transport packages will be evaluated and documented for compliance to the drawings provided in Section 1.3 prior to initial use of the containers as a Models Sentry 110, Sentry 330 or 867 Transport Package.

2.3.2 Examination

Section 8 describes the acceptance testing and routine maintenance requirements for shield containers and package components used on these transport packages.

2.4 General Requirements for All Packages

2.4.1 Minimum Package Size

These transport packages exceeds the minimum size requirements since the smallest versions measure 12 inches (305 mm) tall, 24 inches (610 mm) wide, and 18 inches (457 mm) in diameter.

2.4.2 Tamper-Indicating Feature

These packages incorporates a seal wire attached to the locked protective cover over the front plate outlet port which, if broken during transport, serves as evidence of possible unauthorized access to the contents.

2.4.3 Positive Closure

These packages do not involve complex containment systems for source securement. The sources for these packages are all special form, welded capsules. The source wire assembly is held securely in the device by components of the lock assembly.

All packages use a security screw, in addition to the 4 hex head bolts, to attach and secure the lock assemblies to the package. A special, uncommon, drive bit is required to remove the security screw and gain access to the source assembly by removing the lock assembly plates.

A cover over the source wire connector prevents access to the source assembly until a keyed lock is actuated and the cover removed. This cover is in place during transport of the package.

2.5 Lifting and Tiedown Standards for All Packages

2.5.1 Lifting Devices

2.5.1.1 Basic Configuration (without rib/link assembly)

All packages in the basic configuration can be lifted by the use of properly rated chains or slings fitted through properly rated lifting eyebolts or hoist rings. The eyebolts or hoist rings must be threaded into any of the rivnuts located around the outside of the welded body of the package. Any one of the rivnuts can safely lift the heaviest package in the basic configuration without yielding as documented in Technical Report 171 (see Section 2.12).

2.5.1.2 Standard Configuration (with rib/link assembly)

All packages in the standard configuration can be lifted by the use of properly rated chains or slings fitted through the large hole in any one or all of the upper four rib assemblies. Any one or more of the rib assemblies can safely lift the heaviest package in the standard configuration without yielding as documented in Technical Report 171 (see Section 2.12).

2.5.2 Tie-Down Devices

2.5.2.1 Basic Configuration (without rib/link assembly)

The packages in the basic configuration have no tie down attachments. The package in this configuration can be blocked and braced according to standard transportation practices.

2.5.2.2 Standard Configuration (with rib/link assembly)

All packages in the standard configuration can be tied down by the use of properly rated chains or slings fitted through the large hole in any one or all of the upper four rib assemblies. The rib assemblies can safely tie down the heaviest package in the standard configuration without yielding as documented in Technical Report 172 (see Section 2.12).

2.6 Normal Conditions of Transport

2.6.1 Heat

The heat source for the Models Sentry 110, Sentry 330 and 867 Transport Packages is a maximum of 330 Curies of ^{60}Cobalt which generates 5.5 watts. Assuming the entire decay heat, 5.5 watts, is absorbed by the package, the maximum surface temperature caused by the effects of solar input and content decay is conservatively 127°C (261°F) at the top surface of the package (Section 3.4.1.1). This temperature is well below the maximum service temperature for the materials of components important to safety used in these transport packages. Therefore, these packages will not be adversely affected by a surface temperature of 127°C (261°F).

Table 2.6a: Radionuclide Decay Energy

Radionuclide	Package Activity (Ci)	MeV/Decay	Watts/Package
Cobalt-60	330	2.82	5.5

Resource references:

Table of Isotopes, Volumes I & II, Eighth Edition. John Wiley & Sons, Inc., 1996.

2.6.1.1 Summary of Pressures and Temperatures

Table 2.6b: Summary Temperatures Normal Transport

Temperature Condition	Model Sentry 110, Sentry 330 & 867	Comments
Insolation (38°C in full sun)	127°C (261°F)	Section 3.4.1.1.
Decay Heating (38°C in shade)	40°C (104°F)	Section 3.4.1.2

As all components are vented to ambient, no pressure will build up in the package under Normal Transport conditions that would adversely affect package performance or integrity. Evaluation of pressures for this package are contained in Section 3.4.2 and summarized in Table 3.1.4.a.

2.6.1.2 Differential Thermal Expansion

If the top of the package reaches a maximum of 127°C due to solar heating (See Section 3.4.1.1) and its initial temperature was 38°C, then this temperature difference of 89°C would increase the diameter of the stainless steel top plate to a maximum of 0.029 inches based on the following:

$$E = D\alpha\Delta T$$

Where: D = Diameter of the outer weldment
α = Coefficient of Thermal expansion
ΔT = Temperature differential

Substituting we get: E = (18 in)(18E-6 in/in°C)(89°C) = 0.029 in

However, the side surface would also increase in diameter due to solar heating. Based on calculations in Section 3.4.1.1, the side surface would heat to a maximum of 90°C from its initial temperature of 38°C. This temperature difference would increase the diameter of the tube shaped side surface to a maximum of 0.017 inches

$$E = D\alpha\Delta T = = (18\text{ in})(18\text{E-6 in/in°C})(52°\text{C}) = 0.017\text{ in}$$

If the maximum side surface temperature of the package at the access ports conducts without losses through to the internal titanium pins, then the temperature of the pins at the connection could be 90°C. In the worst case, the DU shield could still be at the initial temperature of 38°C for a 52°C temperature differential between the pin and shield.

The smallest sized pin mounting hole in the shield when at 38°C is 0.74 inches. The largest pin diameter at 38°C is 0.73 inches. At the initial temperature, a 0.01 inch minimum design clearance exists between the pin and hole.

If the diameter of the titanium pin were to expand due to the 52°C temperature change, it would grow by only 0.0004 inches (52°C x 11E-6 in/in °C x 0.73 in). This increase in diameter of the shield pin is less than the design clearance. The remaining gap between the pin and mating hole in the shield would not produce stress to the DU shield or pin.

Therefore the thermal expansion encountered during Normal Transport will be insignificant with respect to the manufacturing tolerances of the package.

2.6.1.3 Stress Calculations

The thermal stress in the package due to solar heat is caused by the relative expansion or strain between the warm top surface and relatively cool side surface. The strain caused by the differential thermal expansion is 0.012 inches (0.029 – 0.017) producing an internal stress of 19,333 psi: (29E+6 x (0.012/18 in)). This material stress is insignificant to the yield strength of the stainless steel body weldment.

2.6.1.4 Comparison with Allowable Stresses

All stresses calculated in Section 2.6.1 are about ½ the allowable yield strength of the materials of construction. Further, the Model Sentry 110, Sentry 330 and 867 packages were fully tested and passed under Normal Conditions of transport. It is therefore concluded that these packages will satisfy the performance requirements specified by the regulations.

2.6.2 Cold

The Models Sentry 110, Sentry 330 and 867 Transport Packages do not incorporate any materials that are susceptible to brittle fracture at low temperature. All materials used in these packages and important to safety will not be adversely affected by temperatures down to -40°C (-40°F), the minimum specified in the regulations. Thus, it is concluded that the Models Sentry 110, Sentry 330 and 867 Transport Packages will withstand the normal transport cold condition.

2.6.3 Reduced External Pressure

These transport packages are open to the atmosphere and contains no components which could create a differential pressure relative to atmospheric conditions or components within the package. Therefore, the reduced external pressure requirements of 3.5 psi in 10 CFR, 3.6 psi in 49 CFR and 8.7 psi (60 kPa) and 0.7 psi (5 kPa) in IAEA are met.

The authorized contents are special form source capsules that meet a minimum ISO 2919-1999 classification of Class 3 for pressure. This classification is more limiting than the reduced external pressure requirement as it covers 25 kN/m^2 to 2 MN/m^2. Therefore, the reduced external pressure requirements of 3.5 psi in 10 CFR and 8.7 psi (60 kPa) in 49 CFR and IAEA will not adversely affect the package containment.

Reference: ISO 2919-1999, Radiation Protection – Sealed radioactive sources - General requirements and classification.

2.6.4 Increased External Pressure

These transport packages are open to the atmosphere and contain no components which could create a differential pressure relative to atmospheric conditions. Therefore, the increased external pressure requirements of 20 psi in 10 CFR 71 will not adversely affect the package containment.

Again, the authorized contents are special form source capsules that meet a minimum ISO 2919-1999 classification of Class 3 for pressure. This classification is more limiting than the increased external pressure requirement as it covers 25 kN/m^2 to 2 MN/m^2. Therefore, the increased external pressure requirements of 20 psi in 10 CFR 71 will not adversely affect the package containment.

2.6.5 Vibration

The shields in these transport packages are attached to the welded body at both access ports by shield pins. A cotter pin at each of the shield pin retains the shield pin to the shield and access port. Cotter pins are routinely used in high vibration situations (i.e. wheel bearing nut retention) and will easily withstand vibration incident to transport. A similar construction has been used in the Model 880 devices (Reference Certificate of Compliance USA/9296/B(U)). The Model 880 devices have been used in transport for over 8 years without incident caused by vibration.

The lock assembly plate attachment bolts and screws are tightened to a prescribed torque at assembly to prevent unintentional release even after repeated use. It is therefore concluded these transport packages will withstand vibration normally incident to transport.

2.6.6 Water Spray

The Models Sentry 110, Sentry 330 and 867 transport packages are constructed of water-resistant materials throughout. Therefore, the water spray test would not reduce the shielding effectiveness or structural integrity of the package.

2.6.7 Free Drop

Five test specimens, serial numbers TP180A through TP180E were built to the basic transport configuration shown in Figure 1.2b for the Model Sentry 330 design. The differences between the Model 867 package and the Models Sentry 110 and Sentry 330 are that the Model 867 source tube has a stop in the middle of the s-tube and is equipped with two lock assemblies modified slightly from the design used on the Models Sentry 110 and Sentry 330 packages (see Section 1.2.1.3).

The Standard package configuration (see Figure 1.2a), for all package designs, is the heaviest configuration. The array of handling rib assemblies of the Standard configuration increases the weight for each Basic package design by approximately 80 lb. Since, the handling ribs provide protection and substantial impact energy absorption in certain free drop orientations, the worst case package construction for normal condition testing was determined to be test specimens manufactured to the Model Sentry 330 Basic design, but adjusted for the worst case package transport weight.

The drop height for each specimen was adjusted higher than the 1.2 meters to produce the equivalent impact energy as a specimen built to the maximum package weight of 780 pounds. This adjustment compensated for any weight differential between the test specimens and the maximum package weight for the tested configuration requested under this submission.

Test Plan 180, Section 3.3 (see Section 2.12) includes a detailed discussion and evaluation of the drop test height adjustment made to compensate for test unit specimens that weighed less than the maximum weight requested under this submission.

The fracture toughness (strength and ductility) of the structural material in these transport packages will not change significantly within the temperature range of -40°C to +38°C (-40°F to +100°F). Within this temperature range, the depleted uranium shield will exhibit only slightly less ductility than the other structural materials. Since the depleted uranium shield is retained in the package by internal support structures and the body weldment, this slight variation in ductility will have no significant impact on the results of the package performance during the normal transport testing.

Test Plan Report 79 (see Section 2.12) shows the compressive impact strength of the polyurethane foam changes very little between -40°C to +38°C (-40°F to +100°F). The foam is aided in limiting the shield movement during the impact of the drop test by the titanium pins and the welded structure. These items aid in keeping the shield secure and in place during a drop impact. Testing at ambient temperature was performed to demonstrate compliance with the normal transport condition drop testing since the -40°C to +38°C (-40°F to +100°F) temperature range will not have any significant detrimental impact on the results of the drop tests performed.

Based on design similarities, the Models Sentry 110 and 867 packages will be expected to perform as well if not better than the Model Sentry 330 test units evaluated under this section. The differences in the Model 867 and Model Sentry 330 lock plate assemblies will not significantly impact the Model 867's ability to meet the normal condition drop test conditions and the Model 867 package performance can be bounded by the Model Sentry 330 test results and evaluations.

2.6.7.1 Rear Plate Port Drop Orientation – Square Hit

Test specimen TP180A was subjected to the 1.2 meter (4 foot) free drop in accordance with Test Plan 180 (Section 2.12). The rear plate port orientation of the 1.2 meter (4 foot) free drop was selected because of its potential to cause a shift in the shield position with possible damage to the source wire. In addition, it was possible that this drop orientation could cause a failure/break in the rear plate attachment bolts which could impact the source security in the package. The orientation for this drop test is shown in Figure 2.6a.

The test specimen was dropped at an ambient temperature of +11°C (+51°F). Photographs of the drop orientation are provided in Test Plan 180 Report #1 (Section 2.12).

The black plastic dust cover compressed slightly into the port tube and the welded port tube was slightly bent in towards the dust cover. One of the dust cover attachment pins sheared. No damage was found on the rear plate attachment bolts. The source assembly remained secured in the package and the source location within the package remained unchanged after the test.

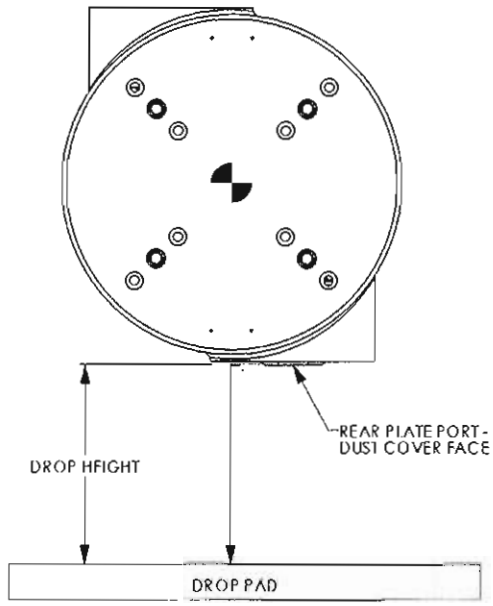

Figure 2.6a – 1.2 m (4 ft) Drop Orientation TP180A

Since the source location remained unchanged, it was assumed there was no change in the radiation dose rates after the 1.2 m (4 ft) drop test. This was later confirmed for this test specimen (TP180A) after performance of the 30 ft drop test under Test Plan 180 Report #2 (Section 2.12). The maximum radiation measurements at the surface and at one meter from the surface of test specimen TP180A were within the regulatory limits of 200 mR/hr and 10 mR/hr respectively for this test specimen after performance of the 30 ft drop test.

2.6.7.2 Rear Plate Port Drop Orientation – Edge Hit

Test specimen TP180B was subjected to the 1.2 meter (4 foot) free drop in accordance with Test Plan 180 (Section 2.12). This rear plate port orientation of the 1.2 meter (4 foot) free drop was selected in an attempt to bend the rear plate port edge enough to break the rear plate attachment bolts or other important lock components. The orientation for this drop test is shown in Figure 2.6b.

The test specimen was dropped at an ambient temperature of +11°C (+51°F). Photographs of the drop orientation are provided in Test Plan 180 Report #1 (Section 2.12).

The welded port tube bent in towards the dust cover by about 1 inch (2.54 cm). No damage was found on the source wire or the rear plate attachment bolts. The source location within the package changed slightly, however, a post test radiation profile showed that the external radiation dose rates remained within the regulatory limits of 200 mR/hr and 10 mR/hr respectively.

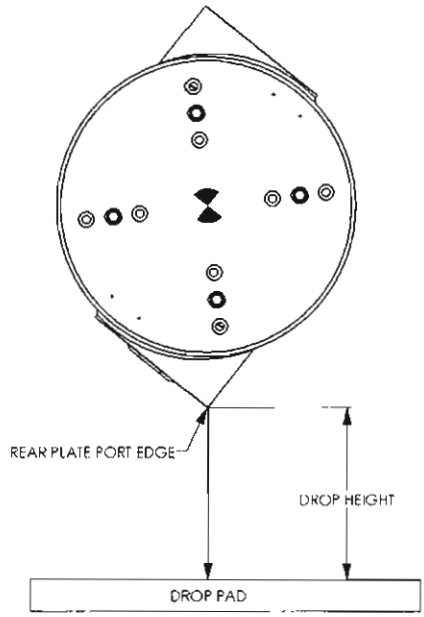

Figure 2.6b – 1.2 m (4 ft) Drop Orientation TP180B

2.6.7.3 Shell Side Drop Orientation – Weld Seam Hit

Test specimen TP180C was subjected to the 1.2 meter (4 foot) free drop in accordance with Test Plan 180 (Section 2.12). This side shell weld seam drop orientation was selected in an attempt to fracture the shell seam weld and/or shift the shield away from the source. The orientation for this drop test is shown in Figure 2.6c.

The test specimen was dropped at an ambient temperature of +11°C (+52°F). Photographs of the drop orientation are provided in Test Plan 180 Report #1 (Section 2.12).

The longitudinal seam of the welded body showed minor deformation. No weld seam break occurred. No damage was found on the source wire or the rear plate attachment bolts. The source location within the package remained unchanged.

Since the source location remained unchanged, it was assumed there was no change in the radiation dose rates after the 1.2 m (4 ft) drop test. This was later confirmed for this test specimen (TP180C) after performance of the 30 ft drop test under Test Plan 180 Report #2 (Section 2.12). The maximum radiation measurements at the surface and at one meter from the surface of test specimen TP180C were within the regulatory limits of 200 mR/hr and 10 mR/hr respectively for this test specimen after performance of the 30 ft drop test.

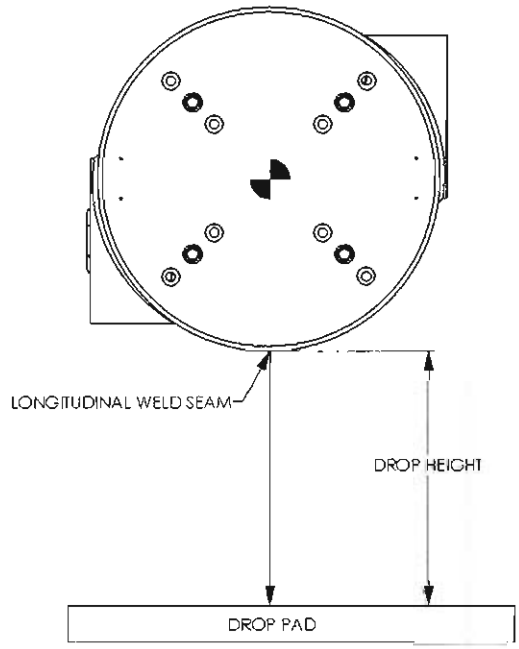

Figure 2.6c – 1.2 m (4 ft) Drop Orientation TP180C

2.6.7.4 Shell Edge Drop Orientation – Seam Hit

Test specimen TP180D was subjected to the 1.2 meter (4 foot) free drop in accordance with Test Plan 180 (Section 2.12). This orientation was selected in an attempt to fracture the shell longitudinally and/or fracture the edge welds. The orientation for this drop test is shown in Figure 2.6d.

The test specimen was dropped at an ambient temperature of +11°C (+51°F). Photographs of the drop orientation are provided in Test Plan 180 Report #1 (Section 2.12).

The end seam of the welded body was slightly deformed. There was no break in the weld seam. No damage was found on the source wire or the rear plate attachment bolts. There was no change in the source location within the package.

Based on the source location, the minimal damage produced to the test unit and a comparison of the pre and post radiation profiles of other test units with significantly more damage, it was determined that a post radiation profile of TP180D was not necessary. The condition of test unit TP180D after the 1.2 m (4 ft) drop test and the fact that the source location remained unchanged after the drop test is sufficient to demonstrate that the external radiation dose rates remained within the regulatory limits of 200 mR/hr and 10 mR/hr respectively.

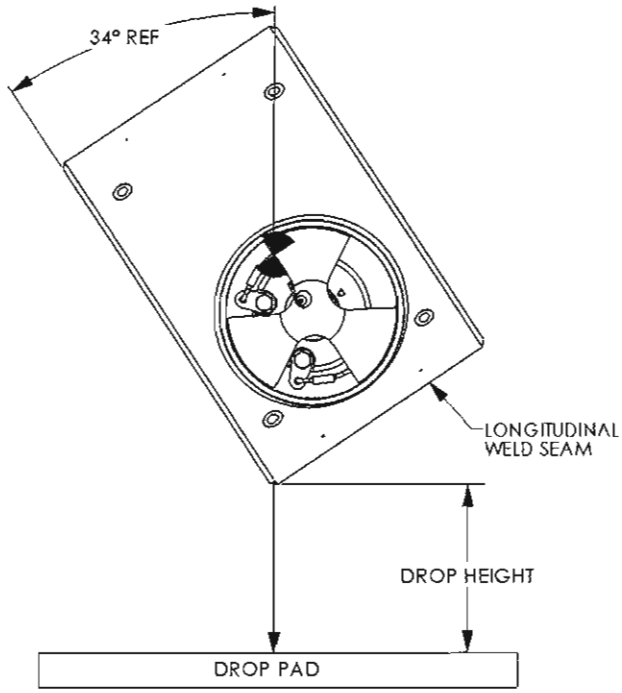

Figure 2.6d – 1.2 m (4 ft) Drop Orientation TP180D

2.6.7.5 Welded Body Drop Orientation – Top Surface Hit

Test specimen TP180E was subjected to the 1.2 meter (4 foot) free drop in accordance with Test Plan 180 (Section 2.12). This top body surface drop orientation of the 1.2 meter (4 foot) free drop was selected in an attempt to fracture the shield and/or shift the shield away from the source. The orientation for this drop test is shown in Figure 2.6e.

The test specimen was dropped at an ambient temperature of +11°C (+51°F). Photographs of the drop orientation are provided in Test Plan 180 Report #1 (Section 2.12).

The pins holding the lock cover sheared and allowed the black plastic dust cover to fall away from the rear plate assembly when the unit was moved. Examination of the rear plate lock assembly after the test revealed a slight twisting of the screws holding the selector ring retainer to the assembly. No other damage was found on the welded body, source wire or rear plate attachment screws. The source location within the package changed slightly, however, a post test radiation profile showed that the external radiation dose rates remained within the regulatory limits of 200 mR/hr and 10 mR/hr respectively.

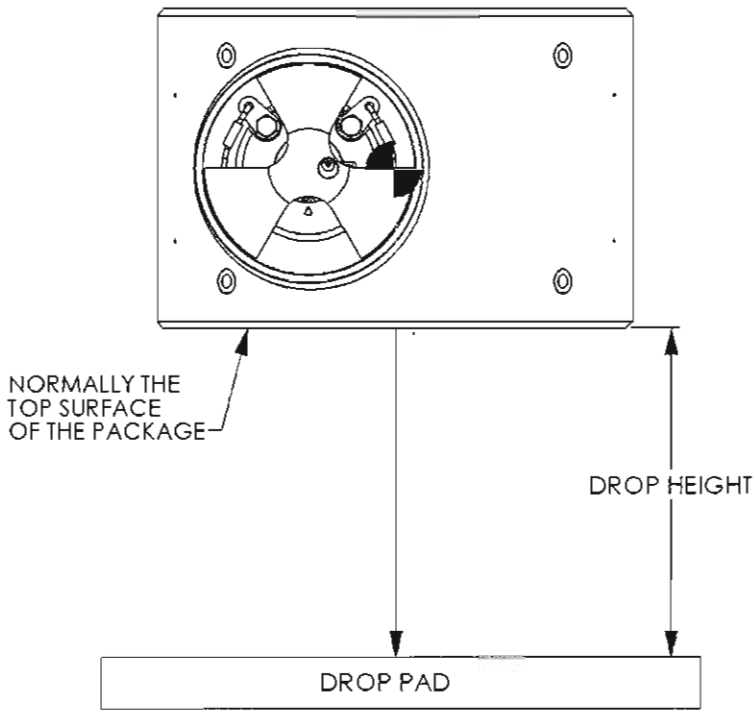

Figure 2.6e – 1.2 m (4 ft) Drop Orientation TP180E

2.6.7.6 Normal Transport Drop Test Results Summary Evaluation

Although all test specimens maintained source integrity and the radiation dose rates after drop testing remained within regulatory limits, the test results from TP180E raised concerns as to how the tested design would perform under the more damaging hypothetical accident condition drop tests.

The test results for TP180E caused the roll pins of the lock cover to shear away, this allowed the dust cover to fall away from the package. The lock cover is a sub component of the plastic trefoil shaped dust cover and is intended to provide protection to the source connector of the source wire assembly. Without the lock cover in place, a hit in the axial direction of the connector could drive the connector through the slot of the lock slide or cause the lock slide to fail which could adversely impact the source location in the package.

Since the hypothetical accident condition testing includes a 1 meter (3.3 ft) puncture drop after a 9 m (30 ft) drop test in this orientation, it was decided to modify the lock cover design to increase its robustness and assure satisfactory performance during the hypothetical accident condition transport testing. To address this issue, the test units used in the normal condition transport testing were modified as follows:

- The roll pins used to secure the lock cover assembly pins were increased in size and shape from 0.16 cm (0.062 inch) diameter pins to a heavy duty 0.48 cm (0.188 inch) diameter pin.

- The lock cover assembly pins were changed from a 0.71 cm (0.28 inch) diameter headless pin, to a 0.97 cm (0.38 inch) diameter headed pin. The head prevents the pins from detaching from the rear plate in the event the roll pins were to fail. (See Figure 2.6f).

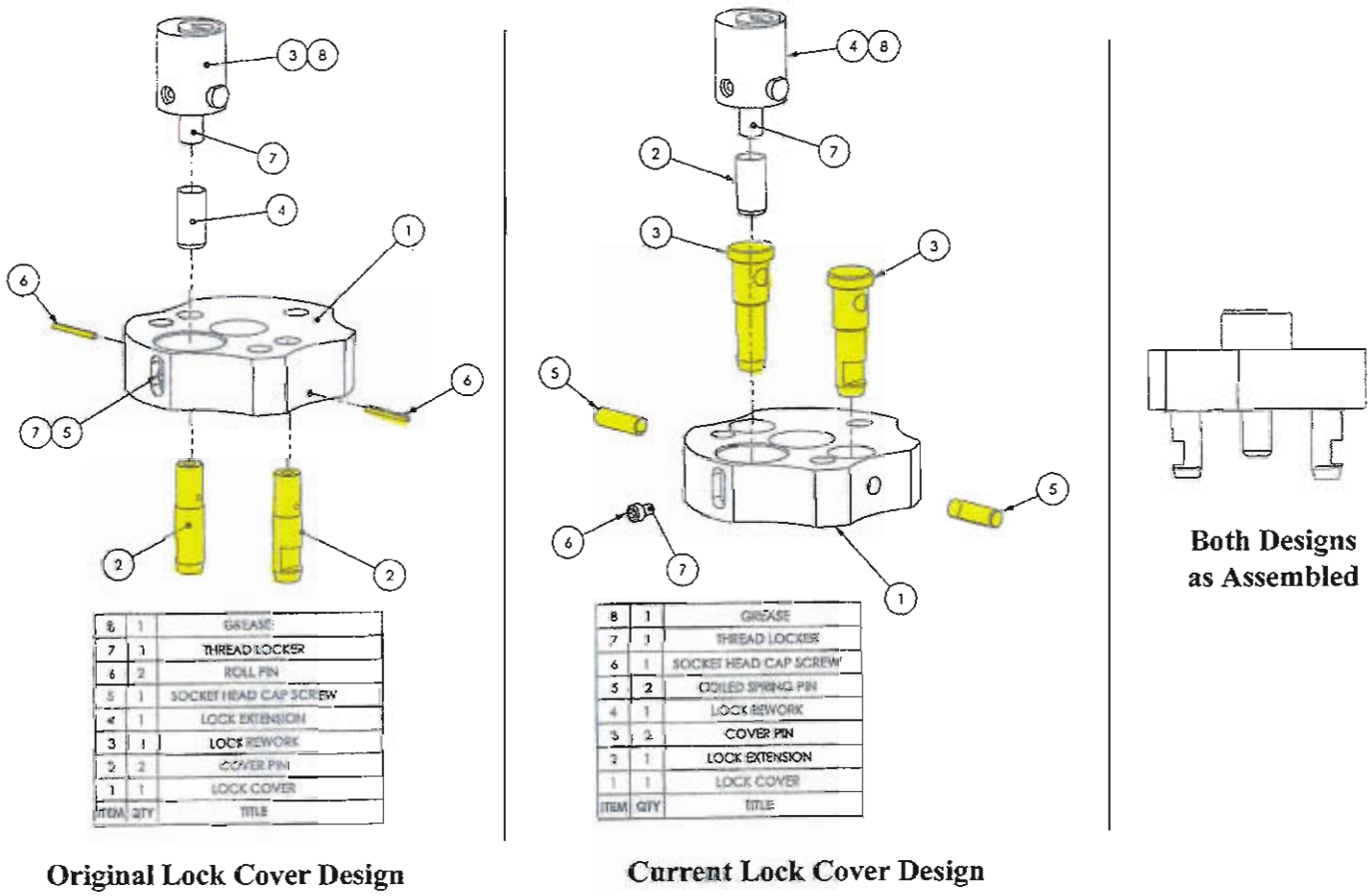

Figure 2.6f – Lock Cover Design Modification
(Pin Changes are Highlighted)

In addition, the 4 screws used to secure the selector ring retainer in the lock assembly were found to be slightly twisted after the 1.2 m (4 ft) drop test on TP180E. It was also important to ensure the selector ring retaining mechanism remained intact and attached to the rear plate after the hypothetical accident condition transport testing. If the 4 screws attaching the selector ring retainer were to fail, the selector ring retainer would fall away from the package leaving the source unsecured. Therefore, it was decided to also redesign the selector ring retainer securing mechanism to ensure it remains intact and attached to the rear plate after the hypothetical accident condition drop testing.

To improve package performance, the test units used in the normal condition transport testing were also modified to make the following changes:

- The selector ring retainer was lengthened so that it was now able to pass through and extend beyond the back side of the rear plate assembly.

- The selector ring retainer was clamped in place on the back side of the rear plate in such a way that it cannot become detached unless the rear plate assembly mounting hardware is removed (see Figure 2.6g).

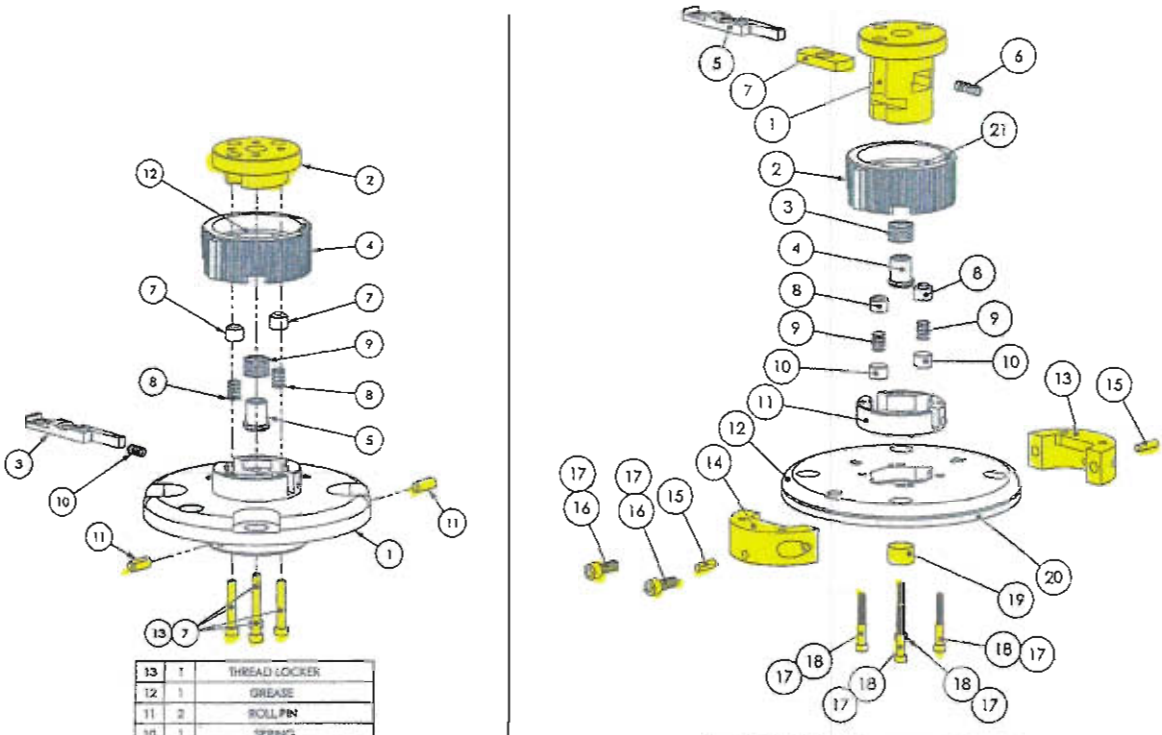

ITEM	QTY	TITLE
13	1	THREAD LOCKER
12	1	GREASE
11	2	ROLL PIN
10	1	SPRING
9	1	SPRING
8	2	SPRING
7	4	SOCKET HEAD CAP SCREW
7	2	ANTI-ROTATE LUGS
5	1	SLEEVE
4	1	SELECTOR RING
3	1	LOCK SLIDE
2	1	SELECTOR RING RETAINER
1	1	REAR PLATE - SENTRY 330

ITEM	QTY	TITLE
21	1	GREASE
20	1	SPACER PLATE
19	1	TUBE SEAL - SENTRY 330
18	4	SCREW, #8-32 X 1-1/4 LG SHCS, STN STL
17	1	THREAD LOCKER
16	2	SCREW, 1/4-20 X 5/8 LG SHCS, STN STL
15	2	ROLL PIN
14	1	LOCK COLLAR
13	1	NUT COLLAR
12	1	REAR PLATE
11	1	INDEX RING ASSEMBLY
10	2	SPACER
9	2	SPRING
8	2	ANTI-ROTATE LUGS
7	1	SPIDGE
6	1	SPRING
5	1	LOCK SLIDE
4	1	SLEEVE
3	1	SPRING
2	1	SELECTOR RING
1	1	SELECTOR RING RETAINER

Figure 2.6g – Lock Assembly Retention Design Modification
Old Design on Left. Modified Design on Right.
(Component Changes are Highlighted)

Test units, modified as described in this section, were tested under the Hypothetical Accident Condition 30 ft (9 m) drop test in the worst case orientations (see Section 2.7.1). Based on the results of the more damaging 30 ft drop testing, it is concluded that the Model Sentry 110, Sentry 330 and 867 packages with these modifications will meet the normal condition drop test requirements for transport as specified under 10 CFR 71.71(c)(7).

2.6.8 Corner Drop

This test is not applicable, as the transport package does not transport fissile material, nor is the exterior of the transport package made from either fiberboard or wood.

2.6.9 Compression or Stacking

The Models Sentry 110, Sentry 330 and 867 packages can be considered to be vertically oriented, cylindrical tubes that are capped at both ends. The basic configuration of the package measures 46 cm (18 inches) in diameter by 30.5 cm (12 inches) high. The cylindrical tube and end caps are 1 cm (3/8 inch) thick type 304 or 304L stainless steel. The minimum yield strength for this material is 30,000 psi.

Assuming a maximum package weight of 354 kg (780 lbs), the calculated compressive load would be 5 times this value or 1,769 kg (3,900 lbs). The vertically projected area of the package equals 1,645 cm^2 (255 in^2). This value, multiplied by 13 kPa (2 lb/in^2) produces a compression load of 231 kg (510 lbs) which is significantly less than the calculated compressive load equal to 5 times the maximum package weight. Therefore, compliance with the compression test requirements will be bounded by the load analysis for 5 times the maximum package weight.

During transport, the compressive load would be uniformly applied onto the top end cap, compressing the tube in the longitudinal direction. The maximum compressive stress for the test is calculated by dividing the tube's cross sectional area, 120 cm^2 (20 in^2), into the applied load. This results in a compressive stress on the tube's cross section of 195 psi.

A safety factor can be calculated by dividing the minimum yield strength of the tube material (30,000 psi) by the maximum resulting compressive stress (195 psi). This produces a safety factor of 154 which indicates that the package can support a load of 1,769 kg (3,900 lbs) for the test time of 24 hours with no structural loss.

The slenderness ratio of a 30.5 cm (12 inch) long by 46 cm (18 inch) diameter hollow cylinder establishes the package as a short column. For a short column, the strength limit of the tube material is the determining factor for assessing failure. In this case, it is demonstrated that buckling failure will not be a concern for these packages.

Based on this assessment, it is concluded that the Models Sentry 110, Sentry 330 and 867 will be able to withstand, without damage to the package integrity, the worst case compressive load as specified under 10 CFR 71.71(c)(9).

2.6.10 Penetration

Since the dust cover assemblies on the Models Sentry 110, Sentry 330 and 867 packages are identical, only 1 penetration test was performed to demonstrate compliance to this test requirement. Test specimen TP180A was subjected to a penetration test, in accordance with Test Plan 180 (see Section 2.12).

The penetration test targeted the dust cover area of the transport package. The dust cover protects the rear plate lock features from a direct hit from a penetration bar. The only damage option would be to attempt to penetrate the cover and/or the integral plunger lock.

The TP180A test specimen was tested at an ambient temperature of +18.9°C (+66.1°F) since the materials used in the dust cover and lock assemblies are not adversely affected by temperatures between -40°C to +38°C (-40°F to +100°F).

Photographs of the testing are provided in Test Plan 180 Report #1 (Section 2.12). The penetration bar impacted on the brass plunger lock of the black trefoil dust cover. Inspection following the test indicated that the bar hit as intended on the specimen, and produced a small dent on the plastic dust cover. The impact damaged the plunger lock such that the key could not be inserted into the lock after the test, however, the source remained secure in the shielded position and there was no loss of structural integrity or reduction of shielding efficiency as a result of the impact.

Based on this testing, it is concluded that the Models Sentry 110, Sentry 330 and 867 will be able to withstand, without damage to the package integrity, the penetration test specified under 10 CFR 71.71(c)(10).

2.7 Hypothetical Accident Conditions

Sections 2.7.1 through 2.7.5 summarize evaluations and testing for the hypothetical accident conditions of transport tests. Section 2.7.6 summarizes the results of this testing.

Four test specimens, serial numbers TP180A through TP180C and TP180E were built to the Basic transport configuration shown in Figure 1.2b for the Model Sentry 330 design. Two test specimens, serial numbers TP180D and TP180G, were built to the Standard Model Sentry 330 design, except that the plastic inserts were omitted from the test specimens (see Figure 2.7a). The lock cover and lock plate assemblies for all test units were modified as described under Section 2.6.7.6. These redesigns were intended to improve the overall package performance and were prompted by the test results from the normal transport drop testing.

The TP180D and TP180G test specimen configuration was a special configuration that would not normally be used in transport, however this standard configuration without the plastic inserts present represented the worst case impact damage to the body weldment for any of the Standard package configurations. This test specimen configuration demonstrated the optional nature of the plastic inserts since the Standard configuration will still maintain transport container compliance even in the case where the plastic inserts may be damaged or missing from the package.

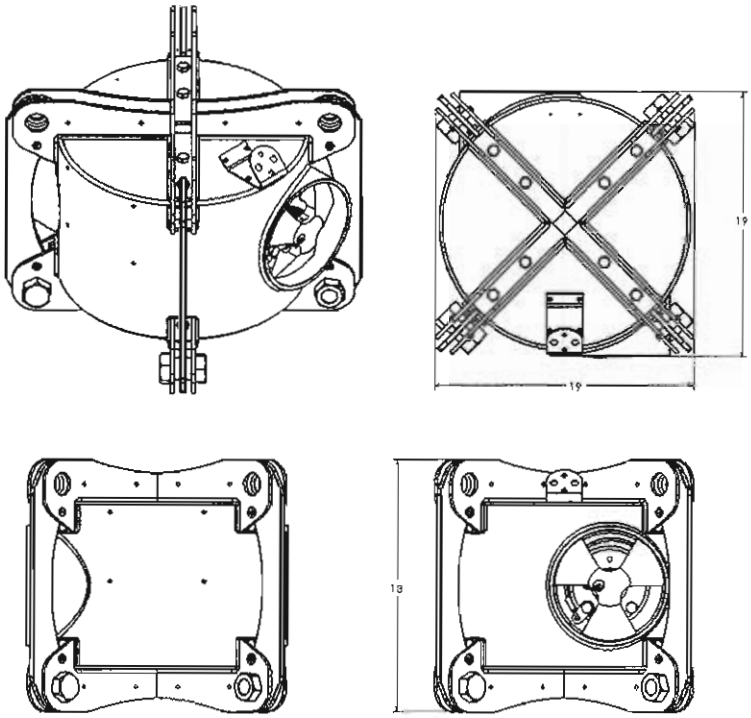

Figure 2.7a – Transport Package Special Configuration – Test Specimen TP180D & TP180G

The statements under Section 2.6.7 (Free Drop test for Normal Transport) regarding package similarities, drop orientations, weight adjustments and test specimen temperature prior to testing are also applicable for the Hypothetical accident drop testing performed for these packages.

Based on design similarities, the Models Sentry 110 and 867 packages will be expected to perform as well if not better than the Model Sentry 330 test units evaluated under this section. The differences in the Model 867 and Model Sentry 330 lock plate assemblies will not significantly impact the Model 867's ability to meet the Hypothetical accident condition drop test conditions and the Model 867 package performance can be bounded by the Model Sentry 330 test results and evaluations.

The test sequence as specified in 10 CFR 71.73 was determined to be the order which would result in the maximum damage to the package, considering the subsequent application of the fire test. The damaged induced by the 9 m (30 ft) drop impact will make the package vulnerable to containment related damage during the puncture test.

Performing the puncture test before the 9 m (30 ft) drop test will produce minimal damage to the unit and have less potential to adversely affect source containment than performing the puncture test after inducing damage in the 9 m (30 ft) drop test.

The package is only vulnerable to shielding degradation during the thermal test if the body weldment is breached in either the 9 m (30 ft) drop test or 1 m (1.2 ft) puncture tests. Therefore these tests must be performed first to determine if the package will be potentially vulnerable to shield degradation during the thermal test conditions. Based on this assessment, the test sequence listed in 10 CFR 71.73 will produce the worst case potential damage to the containment system.

2.7.1 Free Drop

2.7.1.1 End Drop

a. Flat Body Top Drop Orientation – TP180E & TP180G

Test specimen TP180E was subjected to the 9 m (30 foot) free drop in accordance with Test Plan 180 (Section 2.12). This drop orientation was selected because of its potential to fracture the shield material, cause a shift in the shield position with possible damage to and/or movement of the source wire from the shielded position. The orientation for this drop test is shown in Figure 2.7b.

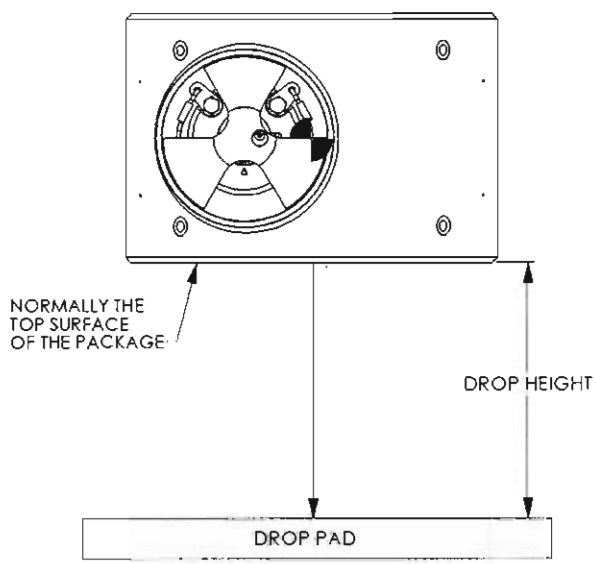

Figure 2.7b – 9 m (30 ft) Drop Orientation TP180E & Second Drop Orientation TP180G

The test specimen was dropped at an ambient temperature of +9°C (+48°F) prior to the drop test. Photographs of the drop orientation are provided in Test Plan 180 Report #2 (Section 2.12).

The impact in the drop appeared as expected during the test, but a review of the drop test video showed the test specimen tilted slightly just before impact, hitting the corner of the package before rotating onto the flat endplate. The impact caused a dent to the corner of the package which was further confirmation of the initial impact location. After the test, the source location moved about 0.16 cm (1/16 inch) towards the front plate end of the

package. The impact of test unit TP180E did not achieve the intended impact orientation, but is more representative of a slap-down, oblique impact than the intended top surface drop.

Due to the deformation caused by the impact of test unit TP180E, it was determined that a second drop of this test unit for the 9 m (30 ft) top surface drop was not advisable as the deformation could interfere with the intended impact.

A decision was made to perform this drop orientation on another test specimen, TP180G. This test specimen, TP180G, was previously dropped in another orientation from 9 m (30ft), but appeared to be in excellent condition and acceptable for a second drop in the top end drop orientation. Before TP180G was dropped the second time, the handling ribs were removed from the specimen to convert it to the basic configuration. (Note: This drop test orientation became the second drop test performed on test unit TP180G.) Test specimen TP180G was dropped as intended, hitting squarely on the flat top surface of the welded body end plate

Post test inspections for test unit TP180E was performed after performance of the 1 m (3.3 ft) puncture test (see Section 2.7.2). The 9 m (30 ft) drop test, which was essentially an oblique, slap down drop orientation, did not create an opening in the package exterior. Radiation profile measurements taken after the puncture testing showed no appreciable elevation in dose levels compared to measurements taken before testing. The slight measurement difference is attributed to a minor shift in the shield relative to the exterior of the package and variation in the accuracy of the measuring equipment (±10%).

b. Flat Body Bottom Drop Orientation – TP180G

Test specimen TP180G was subjected twice to the 9 m (30 foot) free drop in accordance with Test Plan 180 (Section 2.12). The first drop test performed for TP180G was made with the handling ribs attached and was for the bottom surface drop orientation (see Figure 2.7c). This drop orientation was selected to demonstrate that that plastic inserts in the handling ribs were optional and to demonstrate that the handling ribs of the Standard configuration will be less damaging to the package than the Basic configurations tested.

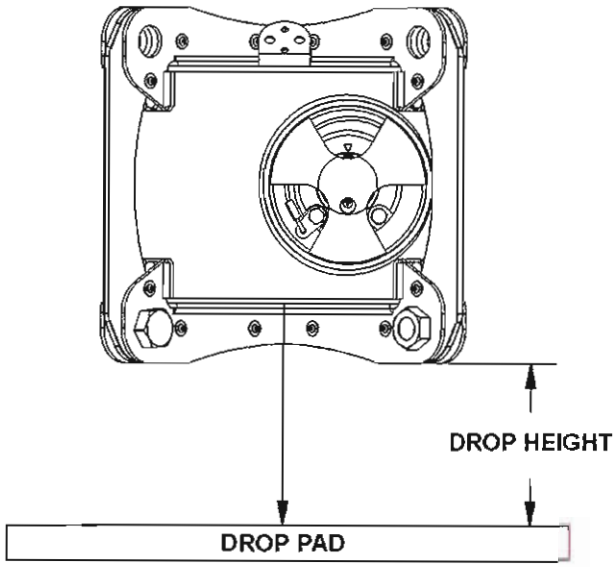

Figure 2.7c – 9 m (30 ft) 1st Drop Orientation TP180G

The test specimen was dropped at an ambient temperature of +9°C (+48°F) prior to the drop test. Photographs of the drop orientation are provided in Test Plan 180 Report #2 (Section 2.12)

The test unit rotated slightly during the drop causing two of the ribs to hit first on impact then immediately impacting the rest of the bottom rib surfaces of the package. The impact broke one load pin and four of the bolts used to assemble the ribs. Some of the ribs were bent and cracked. The bottom ribs were slightly compressed into the bottom endplate of the package causing local deformations and shallow cuts. After the test, the source location moved about 0.15 cm (0.06 inch) towards the rear plate end of the package.

The second 9 m (30 ft) drop for TP180G was performed after removal of the rib assemblies. This drop orientation was the top surface flat body hit initially attempted on test unit TP180E (see Figure 2.7b). The test specimen was dropped at an ambient temperature of +19°C (+66°F). Photographs of the drop orientation are provided in Test Plan 180 Report #2 (Section 2.12)

This impact hit squarely on the top endplate surface causing no obvious external damage to the body weldment. The impact did cause the brass shaft of the front plate outlet port knob to fracture. The fracture caused the knob to be completely removed from the package.

Without the front knob in place, the front plate rotor is allowed to turn freely and could align the port shield into the unshielded position under worst case conditions. This movement of the port shield will increase radiation dose levels locally on the surface of the package and slightly at 1 meter from the surface of the package due to scatter radiation from the source tube.

Post test inspections for test unit TP180G was performed after performance of the 9 m (30 ft) drop tests. The first 9 m (30 ft) drop test was a flat bottom drop on the handling rib assembly to demonstrate the impact limitation effect of the handling ribs as well as the optional nature of the plastic inserts used in the handling ribs as these components are not necessary to ensure package compliance or integrity during transport. The second 9 m (30 ft) drop test was a flat drop on the top surface of the package after removal of the handling rib assembly.

Radiation profile measurements taken after the 9 m (30 ft) drop testing showed an increase in radiation dose at the surface and one meter from the surface of the package due to the loss of the port shield in the front plate assembly. The increased radiation dose rates were less than 550 mR/hr at the surface of the package and less than 2.5 mR/hr at one meter from the surface of the package. These radiation levels are well within the maximum allowable limit of 1 R/hr at 1 meter from the package surface required under the regulations.

2.7.1.2 Side Drop

a. Rear Plate (Lock Assembly Side) Port Drop Orientation – Square Hit

Test specimen TP180A was subjected twice to the 9 m (30 foot) free drop in accordance with Test Plan 180 (Section 2.12). The rear plate port orientation of the 9 m (30 foot) free drop was selected because of its potential to cause a shift in the shield position with possible damage to the source wire. In addition, it was possible that this drop orientation could cause a failure/break in the rear plate attachment bolts which could impact the source security in the package. The orientation for this drop test is shown in Figure 2.7c.

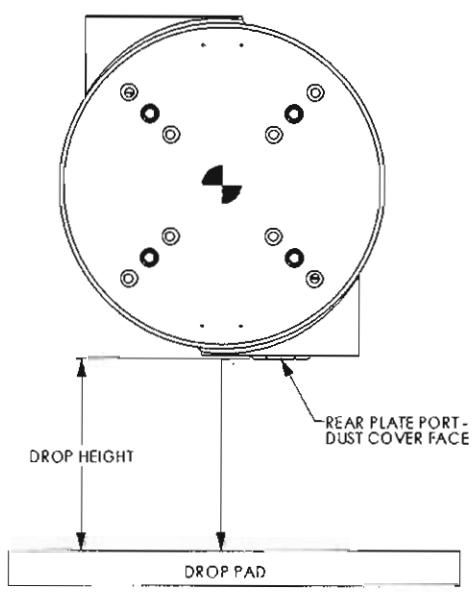

Figure 2.7c – 9 m (30 ft) Drop Orientation TP180A

The test specimen was dropped at an ambient temperature of +53°F. Photographs of the drop orientation are provided in Test Plan 180 Report #2 (Section 2.12). The impact in the first drop did not appear to hit directly on the face of the dust cover protecting the rear plate, however, this impact did cause the corner of the package and edge of the rear plate access port to slightly deform into the package.

The second 9 m (30 ft) drop hit the dust cover as planned. This impact caused additional deformation to the access port, produced a fracture through the dust cover and compressed the plunger lock into the rear plate assembly. The source assembly remained secured in the package and the source location within the package remained unchanged after the test.

Post test inspections for this unit were performed after performance of the 1 m (3.3 ft) puncture test (see Section 2.7.2). The 9 m (30 ft) drop tests did not create an opening in the package exterior. Radiation profile measurements taken after the puncture test showed no appreciable elevation in dose levels compared to measurements taken before testing. The slight measurement difference is attributed to a minor shift in the shield relative to the exterior of the package and variation in the accuracy of the measuring equipment (±10%).

b. Body Weldment Side Drop Orientation – Package Weld Seam Hit

Test specimen TP180C was subjected twice to the 9 m (30 foot) free drop in accordance with Test Plan 180 (Section 2.12). The intended drop orientation was a side impact on the weld seam. This orientation was selected because of its potential to fracture the shell seam weld and/or shift the shield away from the source. The orientation for this drop test is shown in Figure 2.7d.

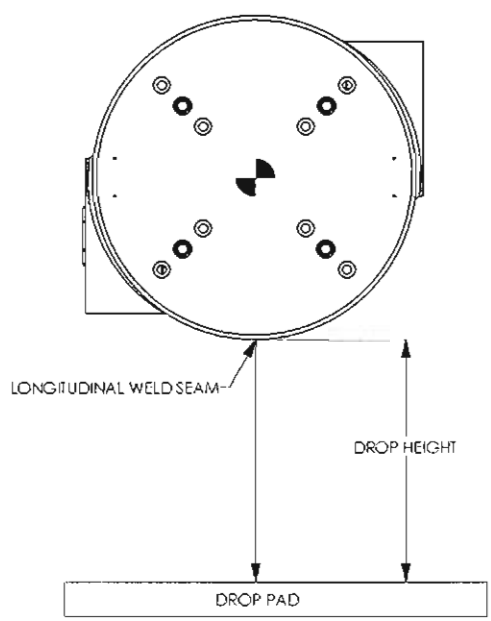

Figure 2.7d – 9 m (30 ft) Drop Orientation TP180C – Side Weld Seam Hit

The test specimen was dropped at an ambient temperature of +8°C (+47°F). Photographs of the drop orientation are provided in Test Plan 180 Report #2 (Section 2.12). The test unit rotated slightly during the drop and impacted on the corner weld at the weld seam intersection with the longitudinal weld of the package. This impact location was originally intended as the impact location for test specimen TP180D which is an oblique package impact (see Figure 2.7g). Results of this test unit drop will be concluded in Section 2.7.1.4 since the drop orientation for the first drop of TP180C meets the impact orientation originally intended for TP180D.

A second 9 m (30 ft) drop test was performed for TP180C. The second drop hit squarely on the longitudinal weld seam of the package side as planned (see Figure 2.7d). This impact caused the curved surface of the body to flatten along the full length of the longitudinal weld seam, but no break or breach of the body weldment occurred. The source assembly remained secured in the package and the source location within the package remained unchanged after the test.

Post test inspections for this unit were performed after performance of the 1 m (3.3 ft) puncture test (see Section 2.7.2). The 9 m (30 ft) drop tests did not create an opening in the package exterior. Radiation profile measurements taken after the puncture test showed no appreciable elevation in dose levels compared to measurements taken before testing. The slight measurement difference is attributed to a minor shift in the shield relative to the exterior of the package and variation in the accuracy of the measuring equipment (±10%).

c. Rear Plate (Lock Assembly Side) Port Drop Orientation – Square Hit

Test specimen TP180D was subjected to the 9 m (30 foot) free drop in accordance with Test Plan 195 (Section 2.12). The rear plate port orientation of the 9 m (30 foot) free drop was selected because of its potential to cause a shift in the shield position with possible damage to the source wire. In addition, it was possible that this drop orientation could cause a failure/break in the rear plate attachment bolts which could affect the source security in the package. The orientation for this drop test is shown in Figure 2.7e.

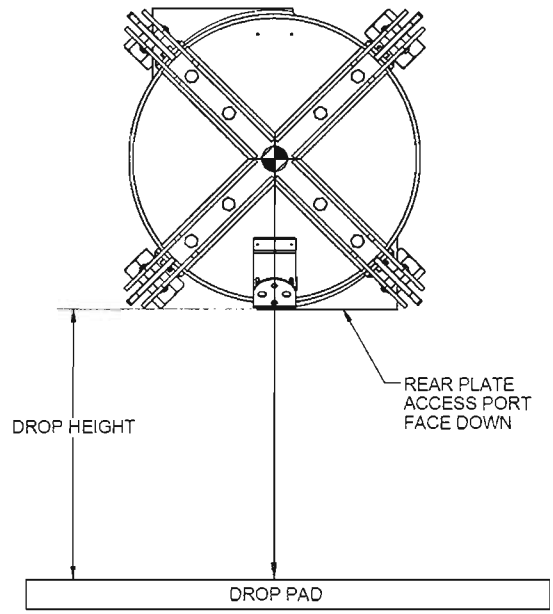

Figure 2.7e – 9 m (30 ft) Drop Orientation TP180D – Lock Port Side Hit

The test specimen was dropped at an ambient temperature of +90°F. Photographs of the drop orientation are provided in Report - Test Plan 195 (Section 2.12). The impact hit directly on the face of the dust cover protecting the rear plate and protruding handling rib assemblies.

The 9 m (30 ft) drop hit the dust cover as planned. This impact caused slight deformation to the access port and deformed the handling rib assemblies at the rear plate access port side of the package. The source assembly remained secured in the package and the source location within the package remained unchanged after the test.

Post test inspections on this specimen were performed after the 1 m (3.3 ft) puncture test (see Section 2.12). The 9 m (30 ft) drop tests and puncture drop did not create an opening in the welded body. Radiation profile measurements taken after the puncture test showed no appreciable elevation in dose levels compared to measurements taken before testing. The slight measurement difference is attributed to a minor shift in the shield relative to the exterior of the package and variation in the accuracy of the measuring equipment (±10%).

2.7.1.3 Corner Drop

Corner Package Drop Orientation – Port Tube Hit

Test specimen TP180B was subjected to the 9 m (30 foot) free drop in accordance with Test Plan 180 (Section 2.12). This drop orientation was selected because of its potential to deform the port enough to break the rear plate attachment bolts or other important lock components. The orientation for this drop test is shown in Figure 2.7f.

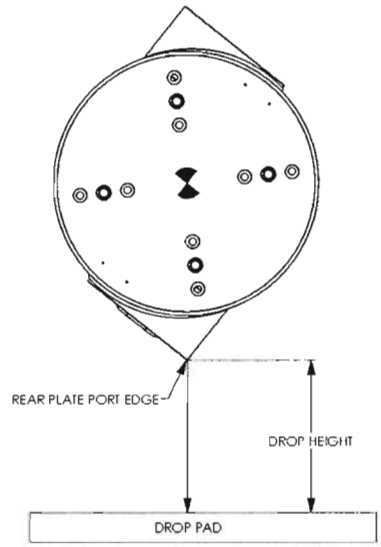

Figure 2.7f – 9 m (30 ft) First Drop Orientation TP180B – Corner Package Port Tube Hit

The test specimen was dropped at an ambient temperature of +8°C (+47°F). Photographs of the drop orientation are provided in Test Plan 180 Report #2 (Section 2.12). The test unit impacted directly on the protruding edge of the rear plate access port tube as planned.

This impact caused the access port tube to flatten into the access port, compressing the dust cover against the rear plate assembly. The source assembly remained secured in the package but the source location moved about 0.06 cm (1/16 inch) towards the rear plate end of the package.

Post test inspections for this unit were performed after performance of the 1 m (3.3 ft) puncture test (see Section 2.7.2). The 9 m (30 ft) drop test did not create an opening in the package exterior. Radiation profile measurements taken after the puncture test showed no appreciable elevation in dose levels compared to measurements taken before testing. The slight measurement difference is attributed to a minor shift in the shield relative to the exterior of the package and variation in the accuracy of the measuring equipment (±10%).

2.7.1.4 Oblique Drops

Slap Down Drop Orientation – Weld Seam Hit

During the first 9 m (30 ft) drop of test specimen TP180C, the package rotated slightly and initial impact for this test unit met the impact conditions intended for TP180D. The corner body drop on the package weld seam orientation was selected because of its potential to fracture the shell longitudinal and end plate welds upon the initial and secondary slap down impacts. The orientation for this drop test is shown in Figure 2.7g.

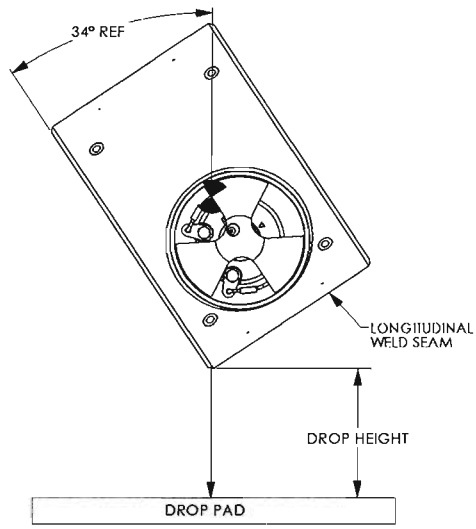

Figure 2.7g – 9 m (30 ft) First Drop Orientation TP180C – Corner Package Weld Seam Hit

The test specimen was dropped at an ambient temperature of +8°C (+47°F). Photographs of the drop orientation are provided in Test Plan 180 Report #2 (Section 2.12). The test unit impacted on the corner weld at the weld seam intersection with the longitudinal weld of the package.

This impact caused localized deformation and flattening to the circular corner of the package. The source assembly remained secured in the package but the source location moved about 0.08 cm (1/32 inch) towards the rear plate end of the package.

Post test inspections for this unit were performed after performance of the 1 m (3.3 ft) puncture test (see Section 2.7.2). The 9 m (30 ft) drop tests did not create an opening in the package exterior. Radiation profile measurements taken after the puncture test showed no appreciable elevation in dose levels compared to measurements taken before testing. The slight measurement difference is attributed to a minor shift in the shield relative to the exterior of the package and variation in the accuracy of the measuring equipment (±10%).

2.7.1.5 Summary of Results

As demonstrated in Test Plan 180 Report #2 and described and assessed in sections 2.7.1.1 through 2.7.1.4, the Models Sentry 110, Sentry 330 and 867 in both the Basic and Standard package constructions (including the standard construction without the optional plastic rib assembly inserts) satisfies the hypothetical accident condition 9 m (30 ft) drop test requirements of 10 CFR 71.73(c)(1). Testing of the test specimens continued as described in Section 2.7.3 of this SAR for the Puncture test requirements of 10 CFR 71.73(c)(3).

2.7.2 Crush

Not applicable. This package is not used for the Type B transport of normal form radioactive material.

2.7.3 Puncture

Justification for all test unit puncture orientations are included in Test Plan 180, Test Plan 180 Addendum and Test Plan 180 Report #2 (see Appendix 2.12). The orientations were determined following the 9 meter drop tests and were selected based on an assessment as to which orientation would impart the most damage to each specimen and results of the normal condition of transport drop testing.

2.7.3.1 Puncture test of TP180A and TP180B

This test specimens were dropped 1.1 m (3.6 ft) onto the fractured dust cover of the rear plate assembly at an angle as shown in Figure 2.7h. This drop orientation was selected because of its potential to pry off the lock plate or its attachment hex bolts from the package causing the source to be removed from its shield.

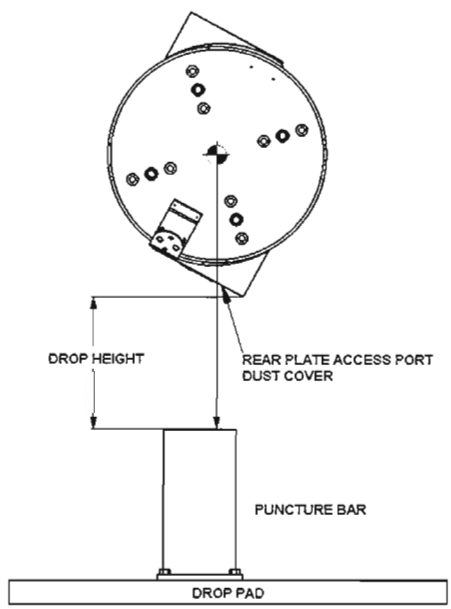

Figure 2.7h – 1 m Drop Orientation TP180A and TP180B

The test specimen TP180A was dropped at an ambient temperature of +6°C (+42°F) prior to the 1.1 m (3.6 ft) puncture test. Photographs of the drop orientation and resultant damage are provided in Test Plan 180 Report #2 (Section 2.12). The test specimen was dropped onto the puncture bar causing the dust cover to tear off about 1/3 of the cover and caused additional cracking to the portion of the dust cover that remained on the package.

All the rear plate hardware remained intact after the drop. The source assembly remained secured in the package and the source location within the package moved 0.32 cm (1/8 inch) towards the front plate end of the package due to a shift in the shield location towards the rear plate side of the package.

The puncture test did not create an opening in the package exterior. Radiation profile measurements taken after the puncture test showed no appreciable elevation in dose levels compared to measurements taken before testing. The slight measurement difference is attributed to a minor shift in the shield relative to the exterior of the package and variation in the accuracy of the measuring equipment (±10%).

The test specimen TP180B was dropped at an ambient temperature of +7°C (+44°F) prior to the 1.1 m (3.6 ft) puncture test. Photographs of the drop orientation and resultant damage are provided in Test Plan 180 Report #2 (Section 2.12). The test specimen was dropped onto the puncture bar causing no visible additional damage to the unit.

Post test disassembly and inspection revealed the plastic dust cover to be wedged in place by the bent over port flange and the lock cover pins were sheared off. Inspection of the lock plate revealed the plate and securing bolts remained intact, but the lock assembly could not be unlocked to release the source wire assembly normally.

The puncture test did not create an opening in the package exterior. Radiation profile measurements taken after the puncture test showed no appreciable elevation in dose levels compared to measurements taken before testing. The slight measurement difference is attributed to a minor shift in the shield relative to the exterior of the package and variation in the accuracy of the measuring equipment (±10%).

2.7.3.2 Puncture test of TP180C

This test specimen was dropped 1.1 m (3.6 ft) onto the corner and longitudinal weld seams as shown in Figure 2.7i. This drop orientation was selected in an attempt to break open the welded shell body and expose the foam fill.

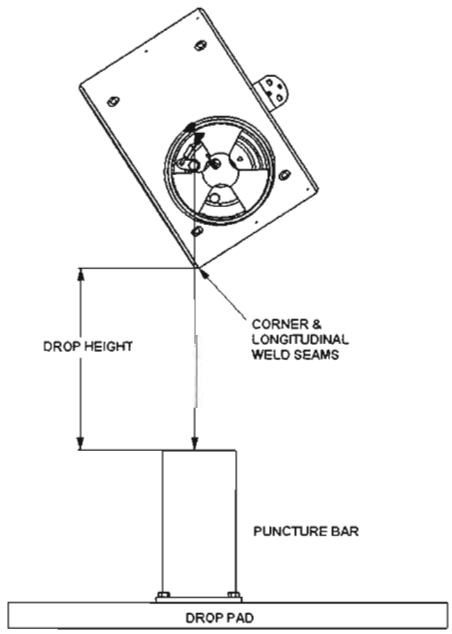

Figure 2.7i – 1 m Drop Orientation TP180C

The test specimen TP180C was dropped at an ambient temperature of +7°C (+44°F) prior to the 1.1 m (3.6 ft) puncture test. Photographs of the drop orientation and resultant damage are provided in Test Plan 180 Report #2 (Section 2.12).

After the drop, the test specimen inspection revealed only superficial contact marks at the corner. No weld seam breach was created. Post test disassembly and inspection confirmed all lock plate hardware remained intact, and the lock functioned normally.

During the post test examination, a shift in the shield within the package of approximately 0.3 inches towards the longitudinal weld seam was noticed. The shift resulted in fracturing the tip of the source tube at the rear access port end. The source assembly remained secured in the package with no movement of the source location within the package.

Radiation profile measurements taken after the puncture test showed no appreciable elevation in dose levels compared to measurements taken before testing. The slight measurement difference is attributed to a minor shift in the shield relative to the exterior of the package and variation in the accuracy of the measuring equipment (±10%).

2.7.3.3 Puncture test of TP180E

This test specimen was dropped 1.1 m (3.6 ft) onto the lock plate of the package. This drop orientation was selected because of its potential to push the source connector through the lock slide causing the source to be removed from its shielded position. The orientation for this drop test is shown in Figure 2.7j.

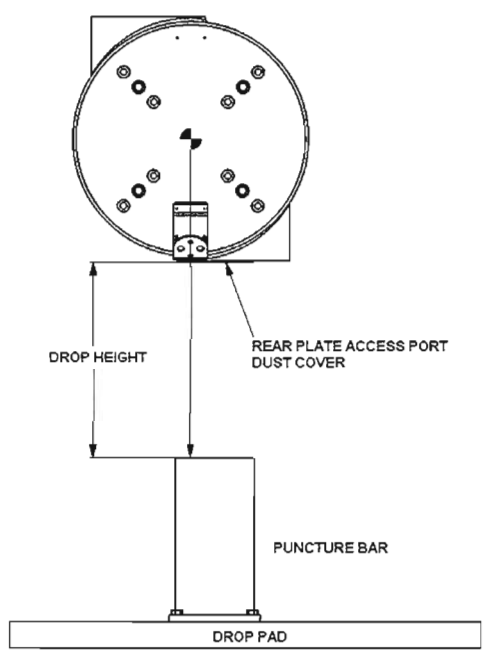

Figure 2.7j – 1 m Drop Orientation TP180E

The test specimen was dropped at an ambient temperature of +9°C (+48°F) prior to the 1.1 m (3.6 ft) puncture test. Photographs of the drop orientation and resultant damage are provided in Test Plan 180 Report #2 (Section 2.12).

This puncture test was performed twice from 3.6 feet in the same orientation since the test unit appeared to miss the target. The second drop test impacted as intended. Resultant damage caused some deformation to the lock plate port and only a superficial contact scratch to the dust cover. No failure was found after the puncture tests.

The source assembly remained secured in the package with a movement of approximately 0.16 cm (1/16 inch). All lock plate hardware remained intact. Radiation profile measurements taken after the puncture test showed no appreciable elevation in dose levels compared to measurements taken before testing. The slight measurement difference is attributed to a minor shift in the shield relative to the exterior of the package and variation in the accuracy of the measuring equipment (±10%).

2.7.3.5 Puncture test of TP180G

No puncture test was performed on this test unit. The majority of the damage induced during the 9 m (30 ft) drops was superficial in nature and was less severe than was seen on other test units that did undergo subsequent puncture testing (e.g., lower potential to breach the body weldment than was seen on TP180C and less potential to damage or move the radioactive source than was seen on TP180A, TP180B and TP180E).

The loss of the front plate knob increased the radiation dose rates from the package (see Section 2.7.1.1b) but the increase was well within acceptable regulatory limits. Any further damage to the front plate assembly would not change the radiation dose levels on or around the package since the rotor shield has already been removed from the package during the 30 ft drop tests. Therefore, performance of the puncture test for TP180G was unnecessary since unit compliance is bounded by the 9 m (30 ft) drop results and damage induced on the other test units from Test Plan 180 Report #2.

2.7.3.6 Summary of Results

As demonstrated in Test Plan 180 Report #2 and described and assessed in sections 2.7.3.1 through 2.7.1.5, the Models Sentry 110, Sentry 330 and 867 in both the Basic and Standard package constructions (including the standard construction without the optional plastic rib assembly inserts) satisfies the hypothetical accident condition 1 m (3.3 ft) drop test requirements of 10 CFR 71.73(c)(2).

2.7.4 Thermal

The thermal test was not performed. Compliance for this requirement is assessed in this Section. The assessment demonstrates that the thermal test would not be sufficient to weaken the package and cause its failure under the final profile criteria.

Review of the condition of the test specimens after the drop tests suggests the fire test would have no affect on the resulting radiation measurements if the thermal test was performed. This is justified based on the condition of the test specimens after the drop tests and the properties of the materials used to secure and shield the source within the specimens.

Because no damage occurred during the Hypothetical Accident Conditions of Transport Tests that could result in oxidation of the depleted uranium shield, thermal testing was not performed on any of the test specimens. Specifically, the lock assemblies remained secured and there were no openings in the transport package welded body that could result in oxidation of the depleted uranium shield.

2.7.4.1 Summary of Pressures and Temperatures

Table 2.7a: Summary Table of Temperatures

Surface Temperature Condition	Model Sentry 110, Sentry 330 and 867 Packages
Fire Test During	800°C (1,472°F)
Post-Fire (Maximum Temperature)	800°C (1,472°F)

These containers are vented to atmosphere. As such, no pressure will build up in the units under Hypothetical Accident conditions.

Table 2.7b: Summary Table of Maximum Pressures

Package Configuration	Void Volume (in^3)	Fire Conditions 800°C (1,472°F) Pressure Developed
Sentry 110	0	0 psig
Sentry 330	0	0 psig
867	0	0 psig

2.7.4.2 Differential Thermal Expansion

Differential thermal expansion of the outer stainless steel shell circumference during the fire test is approximated by considering the extreme temperature differential of -40°C to +800° C (-40°F to +1,472° F):

$$E = \pi D \alpha \Delta T$$

Where: $D =$ Diameter of the outer shell (18 in)
$\alpha =$ Coefficient of thermal expansion
$\Delta T =$ Temperature differential (from -40°F to 1,472°F)

Substituting we get: $E = \pi\ (18\ \text{in})(9.9\mu\text{in/in°F})(1{,}512\text{°F}) = 0.85\ \text{in}$

An expansion of 0.85 inches to the circumference changes the diameter of the outer shell from 18 to 18.27 inches. This change does not create thermal stress in the structure since it can be considered unrestrained.

2.7.4.3 Stress Calculations

The exterior and support structure of the SENTRY transport package in all configurations is not restrained, is open to atmospheric pressure, and is constructed on the same stainless steel material. For these reasons, no thermal stress exists in the exterior or support structure of the package when subjected to thermal differentials caused by the hypothetical accident condition fire test.

The design clearance between mating components of different materials is sufficient enough to prevent a press fit stress condition caused by a temperature change of 800°C (1,472°F).

2.7.4.4 Comparision of Allowable Stresses

Since there are no thermal stresses in the package structure, there is no need to compare the calculated thermal stresses with the materials allowable stress.

2.7.4.5 Additional Thermal Analysis

The condition of all test specimens after being subjected to the 9 m (30 foot) free drop and 1 m (40 inch) puncture tests indicate the transport packages are capable of withstanding the thermal test without the loss of source security or shielding effectiveness. The damage inflicted on every test specimen showed no unintentional opening in the welded body to allow charred foam to fall away from the package and allow circulating air around the shield to cause depleted uranium oxidation during a thermal test. Since there are small fastener holes and fit clearance gaps around the welded body, there will be no build-up of gas pressure caused by the decomposition of the polyurethane foam at elevated temperatures.

The circulation of air or oxygen through the package has been shown empirically to be the primary contributing factor in the oxidation of depleted uranium shields during thermal testing (see Section 2.12). Further analysis against shield degradation due to oxidation is contained in Section 2.7.4.5(a).

Without the possibility of gross shield oxidation, and subsequent shield degradation, failure under the thermal test conditions would be limited to a mechanical degradation of the packages' shield support structure. The shield support structure for these transport packages is comprised of components constructed of welded 304/304L stainless steel.

The internal shield support structure for all test specimens was intact and completely functional. The shield is completely captured within the welded body at the top and bottom ends, as well as the welded access ports. All source assemblies remained secure in the shielded position after all testing.

The lock assemblies remained intact, attached to the package and continued to secure the source assembly in the shielded position within the package. The source securing components of the lock assemblies consists of the attachment plate, lock slide and sleeve (or lock pins for the Model 867), selector ring, selector ring retainer, four ½-13 bolts and one 5/16-18 screw.

(a) Oxidation of Depleted Uranium (DU) Shielding

Significant oxidation of the depleted uranium does not occur if there is insufficient flow of oxygen available to the shield. Two major contributing factors to limiting this oxidation are the oxygen inhibitive nature of charred polyurethane foam and the packages' ability to contain the foam once charred. This has been demonstrated by thermal testing conducted by QSA Global Inc. in support of previous Type B package submissions described in the following paragraphs.

Under Test Plan Report 72-S2 (Section 2.12), in support of Certificate of Compliance number USA/9035/B(U) for the Model 680-OP Series, camera s/n B198 was subjected to thermal testing. Before testing, the unit was intact and essentially undamaged with no gaps between mating surfaces. After the 30 foot and puncture drop tests, ¾ inch long by 1/16 inch wide gaps were present on both sides of the unit at the side plate/shell interface. Thermocouple readings showed temperatures of up to 1,000°C on the unit and over 900°C within the depleted uranium shield. The foam was completely pyrolized but was contained within the unit. No oxidation of the shield occurred and the unit passed final profile at 0.33 R/hr at one meter.

Under Test Plan 80 Report (Section 2.12), in support of Certificate of Compliance number USA/9269/B(U) for the Model 650L, test specimen TP80(B) was subjected to thermal testing. The drop tests (30 foot and puncture) caused the outer shell to split completely open and the inner shell to crack, creating a 3 inch long by ½ inch wide gap. Subsequent thermal testing caused pyrolization of all the foam and vaporization in the area of the gap. Some minor oxidation of the shield was also noted. Thermocouples recorded temperatures in the shield of over 900°C and close to 1,000°C at the shell. Although the shield oxidized slightly in the area of the gap, the unit passed final profile at 0.028 R/hr at one meter.

As demonstrated in previous thermal testing, minor air gaps in the containment surrounding the shield are insufficient to allow significant oxidation of the depleted uranium shield during the thermal test. The Models Sentry 330 transport package test specimens had no breach of the shield containment and would therefore prevent oxygen ingress to the shield and any resulting deterioration of the depleted uranium shield during the thermal test.

(b) Material Properties at Elevated Temperatures

The melting temperature for all materials of the internal support structure, lock assembly and source assembly are above the thermal test temperature of 800°C. The thermal expansion for the internal support structure materials is less than the design clearance allowed for assembly. Further, the stainless steel and titanium components of the internal support structure, lock assembly and source assembly retain about 30% and 60% of their room temperature strength at 800°C.

The worst case load condition for the thermal test is for the internal structure to support the static weight of the shield in suspension. The dynamic impact nature of the drop tests can subject the structure to a force over 100 times the static weight of the shield. This means the strength of the materials used in the structure would need to decrease by two orders of magnitude or to about 1% of their strength at room temperature. The 30-minute thermal test is not long enough for significant creep deformation to occur in the structure.

(1) Tear Out of the Shield Support Pin

If the package is suspended with the shield supported by only one welded access port shield mount pin, then the strength of the 304 stainless steel shield mounts at 800 °C would provide sufficient support to maintain the shield secured to the structure.

Tear out Area = 0.75 in (pin diameter) times 0.74 in (mount thickness) times 2 (number of mounts) = 1.11 in^2

Maximum Shield Weight (SENTRY 330) = 485 lbs.

Therefore: 485 lbs. / 1.11 in^2 = 437 psi

The strength of 304 stainless steel at 800 °C = ~13,000 psi

(Reference: ASM Stainless Steels, J.R. Davis ed.,1994, p. 508)

This gives a factor of safety of approximately 30 against yielding.

(2) Depleted Uranium(DU) Cracking around the Titanium Pin

Examining the mating parts; the size of the titanium shield pin is 0.73 inches in diameter and the size of the DU shield hole and 304 stainless steel shield mount containing the pin are both 0.75 inches in diameter.

The coefficient of linear thermal expansion for the materials of the parts identified above are as follows:

- 304 Stainless Steel: 10 μ in/in °F (18 μ in/in °C) (Reference: ASM Specialty Handbook Stainless Steels, ed. J.R.Davis, 1994 p. 10.)

- Ti-6Al-4V Titanium: 6 μ in/in °F (11 μ in/in °C) (Reference: ASM Material Properties Handbook Titanium Alloys, ed. Rodney Boyer, Gerhard Welsch, E.W. Collings, 1994, p. 516).

- Depleted Uranium: 8 μ in/in °F (14 μ in/in °C) (Reference: ASM Metals Handbook Desk Edition, ed. Howard E. Boyer, Timothy L. Gall, 1985, p. 1.48)

Based on the part tolerances, there is a minimum of 0.008 inches radial design clearance between the titanium shield pin and the 304 stainless steel shield mount hole. There is a minimum of 0.005 inches radial design clearance between the titanium shield pin and the DU shield hole.

At 800°C the maximum thermal expansion of the shield pin, shield mount hole, and DU shield hole in the radial direction are 0.003, 0.005, and 0.004 inches, respectively. Since the maximum difference between anyone of these is 0.002 inches, there will be no thermal stress applied to these parts during the fire test.

(3) De-Attachment of the Lock Assembly

Consider any test specimen suspended with the lock plate assembly facing downward. In this orientation the weight of the lock plate assembly is held in place by the four 17-4 PH stainless steel hex bolts and the one stainless steel security screw.

The weight of the rear plate assembly is less than 10 pounds. If only one hex bolt remains in place after the free drop and puncture tests, then the stress in the one bolt would be.

$S = F/A = 10 \text{ lbs} / 0.1419 \text{ in}^2 = 71$ pounds per square inch (psi)

A = Bolt Stress Area: 0.1419 in^2 (1/2-13 thread)
F = Maximum Weight of Lock Plate with Cover: 10 lbs.

The allowable stress for the bolt material at 800°C is approximately 40,000 psi (Reference: AK Steel Product Data Sheet 17-4 PH Stainless Steel, P. 8, Table 6 - extrapolated).

Therefore, the calculated factor of safety for one bolt holding the lock plate in place is about 563. This ensures the lock plate will remain attached at 800°C for one hour.

(c) Conclusions

The test specimens were subjected to the 9 m drop and 1 m puncture tests in accordance with Test Plan 180 & Test Plan 195 (Section 2.12).

The test specimens demonstrated these transport package, in all described configurations, satisfy the test requirements of 10 CFR 71 for hypothetical accident drop test conditions. The versions of this transport package with the handling rib assemblies attached do not adversely affect the results of these tests. This conclusion is drawn from the drop test results and thermal analysis as supported by the test data, test inspection data and damage assessments.

Based on the previous empirical data and analyses, we conclude that oxidation of the shield will not occur, the structural integrity of the package will remain intact and the containment of the source will not be affected. As such, these transport packages comply with the requirements of this section.

2.7.5 Immersion - Fissile Material

Not applicable. This package is not used for transport of Type B quantities of fissile material.

2.7.6 Immersion - All Packages

The Models Sentry 110, Sentry 330 and 867 Transport Packages are open to the atmosphere and contains no other components that would create a differential pressure under immersion. All materials are impervious to water and would not be affected.

The primary containment system in these packages is a special form source, which minimally meets the ANSI N43.6 and ISO 2919 requirements for Class 3 pressure testing. Therefore the Models Sentry 110, Sentry 330 and 867 could withstand the immersion test criteria since the Class 3 pressure test requirements are in excess of the required 150 kPa (21.7 lb ft/in2).

2.7.7 Deep Water Immersion Test (for Type B Packages Containing More than 10^5 A_2)

Not applicable. This packaged does not transport normal form radioactive material in quantities exceeding $10^5 A_2$.

2.7.8 Summary of Damage

As demonstrated in Test Plan 180 Reports #1 and #2, and as described and assessed in sections 2.6 through 2.7, the Models Sentry 110, Sentry 330 and 867 in both the Basic and Standard package constructions (including the standard construction without the optional plastic rib assembly inserts) satisfies the hypothetical accident condition drop test requirements of 10 CFR 71.73(c)(2).

Table 2.7A summarizes the results of the Normal Conditions of Transport and Hypothetical Accident testing performed on the worst case constructions for these transport packages. Compliance for all untested package configurations is based on assessments on the tested configurations.

Table 2.7c: Summary of Test Unit Results

Unit, Configuration & Test Plan	Test Description	Results
Assessed Test Plan 180	Compression test (Analysis)	Analysis shows no damage expected
TP180A (Basic) Test Plan 180	1 m penetration bar onto lock dust cover	Small Dent in plastic cover and brass lock
	1.2 m drop onto dust cover	Dented port tube & fractured dust cover pin
	Testing After Lock Modifications (See Section 2.6.7.6 of this SAR)	
	9 m drop #1 onto dust cover (miss)	Increased dent in port tube
	9 m drop #2 onto dust cover	Increased dent in port tube & fractured plastic dust cover
	1 m puncture onto dust cover	About 1/3 of plastic cover removed
	Post-Drop Inspection	Broken dust cover lock
TP180B (Basic) Test Plan 180	1.2 m drop onto welded body lock port	Bent port tube towards dust cover
	Testing After Lock Modifications (See Section 2.6.7.6 of this SAR)	
	9 m drop onto welded body lock port	Port tube crushed onto dust cover
	1 m puncture onto dust cover	Superficial dent on plastic dust cover
	Post-Drop Inspection	Sheared dust cover pins, slight bend to lock plate
TP180C (Basic) Test Plan 180	1.2 m drop onto welded body long weld seam	Dent on edge and longitudinal body weld seam
	Testing After Lock Modifications (See Section 2.6.7.6 of this SAR)	
	9 m drop #1 onto welded body edge weld seam (miss)	Dent on edge body weld seam
	9 m drop #2 onto welded body long weld seam	Longitudinal weld seam flattened into body

Unit, Configuration & Test Plan	Test Description	Results
	1 m puncture onto welded body edge weld seam	Superficial dent in body edge weld seam
	Post-Drop Inspection	Source tube at lock plate port cracked and easily removed by hand, but no impact on source security
TP180D (Basic) Test Plan 180	1.2 m drop onto welded body edge weld seam	Superficial dent in edge weld seam of welded body
TP180E (Basic) Test Plan 180	1.2 m drop onto welded body top end surface	Dust cover pins sheared off - allowing cover to be easily removed.
	Testing After Lock Modifications (See Section 2.6.7.6 of this SAR)	
	9 m drop onto welded body top end surface	Minor bulge in cylinder on impact end of welded body
	1 m puncture #1 onto dust cover (miss)	Dent to rear plate port tube
	1 m puncture #2 onto dust cover	Superficial dent on plastic dust cover
	Post-Drop Inspection	Source tube appears to be oval shaped
TP180G (Standard minus plastic rib inserts) Test Plan 180	Testing After Lock Modifications (See Section 2.6.7.6 of this SAR)	
	9 m drop #1 onto bottom handling rib assemblies	Bent and fractured handling ribs and rib attachment bolts. Shallow indentations into welded body bottom plate.
TP180G (Basic) Test Plan 180	Testing After Lock Modifications (See Section 2.6.7.6 of this SAR)	
	9 m drop #2 onto welded body top end surface	Front plate knob shaft fractured – removing knob.
	Post-Drop Inspection	No other signs of damage found
TP180D (Standard minus plastic rib inserts) Test Plan 195	Testing After Lock Modifications (See Section 2.6.7.6 of this SAR) and Drop Heights Increased to Adjust for Maximum Package Weight of 780 lbs	
	9 m drop onto welded body lock port and handling ribs assemblies	Minor dent to lock plate port tube. Handling ribs bent with two fractured bolts and one fractured load pin.
	1 m puncture onto dust cover	Dust cover shifted about ½ inch
	Post-Drop Inspection	Source connector and dust cover pins sheared off. Dust cover easily removed. Source remained locked and secure.

Based on the condition of the test units after the drop testing, and as assessed in Section 3.5 both the Basic and Standard package constructions (including the standard construction without the optional plastic rib assembly inserts) satisfies the hypothetical accident condition thermal test requirements of 10 CFR 71.73(c)(4).

2.8 Accident Conditions for Air Transport of Plutonium or Packages with Large Quantities of Radioactivity

Not applicable. This package is not used for transport of plutonium or normal form radioactive material. This package is also not used for transport of special form material in quantities ≥ 3,000 A_1.

2.9 Accident Conditions for Fissile Material Packages for Air Transport

Not Applicable. This package is not used for transport of Type B quantities of fissile material.

2.10 Special Form

The Model 680-OP transport packages are designed for use with a special form source capsule Models 60011 or 60012 attached to a flexible source wire assembly (Model A424-14). The source capsules are approved under a U.S. Department of Transportation special form certification USA/0377/S-96. A copy of the current USDOT certificate, including the current approved capsule drawing, is included in Section 2.12.7. Details of encapsulation as well as chemical and physical form of the radioactive material will comply with specifications approved under U.S. Department of Transportation special form certifications.

Details of the Model A424-14 source wire assembly can be found under USA SS&D registration MA-1059-S-105-S and CNSC device registrations R-061-1996-3-2016 or R-061-2032-3-2016.

2.11 Fuel Rods

Not applicable. This package is not used for transport of fuel rods.

2.12 Appendix

2.12.1 Test Plan 180 Revision 2 dated 7 April 2009

2.12.2 Test Plan 180 Addendum Revision 0 dated 25 February 2010

2.12.3 Test Plan 180 Report #1 dated 14 January 2010

2.12.4 Test Plan 180 Report #2 dated 7 April 2010

2.12.5 Test Plan Report 72-S2 (680-OP) dated 15 February 1999 (minus Appendices A through C)

2.12.6 Test Plan Report 80 dated June 1999 (Minus Manufacturing Records)

2.12.7 USDOT Special Form Certificate USA/0377/S-96 Rev 7

2.12.8 Test Plan 79 Report dated 22 October 1998

2.12.9 Technical Report 171 Sentry Transport Package Lifting Analysis dated 30 Jun 2010

2.12.10 Technical Report 172 Sentry Transport Package Tie-Down Analysis dated 21 Jul 2010

2.12.11 Test Plan 195 Revision 0 dated 30 June 2010

2.12.12 Test Plan Report 195 Revision 0 dated 21 July 2010

2.12.1 Test Plan 180 Revision 2 dated 7 April 2009

QSA GLOBAL	Document Number **F-E-1808-1** **Test Plan Cover Sheet**	Revision 0.2 SO 6 APR 09

TEST PLAN 180

SENTRY – Model 860 Projectors & Model 867 Source Changer Type (B) Transport Package Tests

Originator	S. Gemini	Date:	6 APR 2009

APPROVALS			
Engineering		Date:	6 Apr 09
Regulatory		Date:	7 Apr 09
Quality Assurance	C. Roughton	Date:	7 Apr 09

TEST PLAN 180

SENTRY - MODEL 860 PROJECTORS & MODEL 867 SOURCE CHANGER TYPE (B) TRANSPORT PACKAGE TESTS

Rev2

March 26, 2009

Contents

SECTION 1 INTRODUCTION 5

SECTION 2 TRANSPORT PACKAGE DESCRIPTION 6

SECTION 3 REGULATORY COMPLIANCE 13

3.1 Normal Transport Condition Tests 13

3.2 Hypothetical Accident Condition Tests 13

3.3 Free Drop Height Adjustment 14

SECTION 4 DISCUSSION ON SYSTEM FAILURE MODES OF INTEREST 15

4.1 Pass Criteria 15

SECTION 5 ASSESSMENT OF PACKAGE CONFORMANCE 16

5.1 Normal Conditions of Transport (71.43 (f)) 16

5.2 Hypothetical Accident Conditions (71.51 (a)(2)) 16

5.3 Transport Package Contents 16

SECTION 6 CONSTRUCTION AND CONDITION OF TEST SPECIMENS 17

6.1 Test Specimen Justification 18

6.2 Structural Materials of Test Specimen 18

6.3 Temperature Conditions 19

6.4 Pressure Conditions 19

6.5 Vibration Conditions 19

SECTION 7 MATERIAL AND EQUIPMENT LIST 20

SECTION 8 TEST PROCEDURE 21

8.1 Test Sequence 21

8.2 Test Specimen Preparation and Inspection 21

8.3 Drop Test Orientation Overview 22

8.4 Compression Test or Analysis 24

8.4.1 Compression Test Set-up 24

8.4.2 Compression Test Assessment 24

8.5 Penetration Test 25

8.5.1 Penetration Test Set-up 25

8.5.2 Penetration Test Assessment 25

8.6 1.2m & 9m Free Drop Tests 26

8.6.1 1.2m & 9m Free Drop Test Set-up 26

8.6.2 Specimen TP180A 1.2m & 9m Free Drop Test Orientation 26

8.6.3 Specimen TP180B 1.2m & 9m Free Drop Test Orientation 27

8.6.4 Specimen TP180C 1.2m & 9m Free Drop Test Orientation 27

8.6.5 Specimen TP180D 1.2m & 9m Free Drop Test Orientation 28

8.6.6 Specimen TP180E 1.2m & 9m Free Drop Test Orientation 28

8.6.7 1.2m & 9m Free Drop Test Assessment 29

8.7 Puncture Tests 29

8.7.1 Puncture Test Set-up 30

8.7.2 Puncture Test Assessment 30

8.8 SENTRY 330 Projector - Standard Configuration Test Sequence 31

8.9 SENTRY 330 Projector- Special Configuration Test Sequence 31

8.10 SENTRY Source Changer Configuration Test Sequence 31

8.11 SENTRY 330 Projector – Alternate Configuration Test Sequence 31

8.12 Test Inspection 31

8.13 Thermal Test Assessment 32

8.14 Test Specimen Storage 32

SECTION 9 WORKSHEETS 33

List of Figures

Figure 2.1 SENTRY Transport Package Configuration Tree

Figure 2.2 SENTRY Projector Series Transport Package – Standard Configuration

Figure 2.3 SENTRY Projector Series Transport Package – Basic Configuration

Figure 2.4 SENTRY Transport Package Common Components

Figure 2.5 SENTRY Projector(s) Rear-plate Assembly with source wire secured

Figure 2.6 SENTRY Source Changer Rear-plate Assembly with source wire secured

Figure 2.7 SENTRY Projector(s) Alternate Rear-plate Assembly with source wire secured

Figure 6.1 SENTRY Test Specimen Configuration Tree

Figure 8.6.2 Specimen TP180A Free Drop Orientation

Figure 8.6.3 Specimen TP180B Free Drop Orientation

Figure 8.6.4 Specimen TP180C Free Drop Orientation

Figure 8.6.5 Specimen TP180D Free Drop Orientation

Figure 8.6.6 Specimen TP180E Free Drop Orientation

List of Tables

Table 2.1 SENTRY Transport Package Configurations

Table 3.1 SENTRY Transport Package Weight Comparison

Table 4.1 SENTRY Transport Package Failure Modes

Table 6.1 Test Specimen Manufacturing Documentation and Identification

Table 8.3 Free Drop Test Orientation Overview

Test Plan No. 180

Section 1 Introduction

This document outlines the test plan needed for the SENTRY (Model 860) Projector series and (Model 867) Source Changer to meet NRC requirements for Type B(U)-96 packages as described in the Code of Federal Regulations, 10 CFR Part 71, revised as of March 31, 1999. The test plan also covers the criteria stated in the IAEA Regulations for the Safe Transport of Radioactive Material, No. TS-R-1 1996 Edition (Revised).

This document describes the test package specifications, testing equipment, testing scenario, justifies the package orientations for the different test specimens and provides test worksheets to record key steps in the testing sequence.

Roles and Responsibilities

The responsibilities of the groups identified in this plan are:

- **Engineering** executes the tests according to the test plan and summarizes the test results. Engineering also provides technical input to assist Regulatory Affairs and Quality Assurance as needed.

- **Regulatory Affairs** monitors the tests and reviews test reports for compliance with regulatory requirements.

- **Quality Assurance** oversees test execution and test report generation to assure compliance with the QSA Global Quality Assurance Program.

- **Engineering, Regulatory Affairs** and **Quality Assurance** are jointly responsible for assessing test and specimen conditions relative to 10 CFR 71 and IAEA TS-R-1 1996.

Section 2 Transport Package Description

The SENTRY transport package is a family of packages, consisting of 2 different model numbers. Model 860 refers to the SENTRY projector series and Model 867 refers to the SENTRY source changer.

The Model 860 SENTRY Projector series is further broken down into 2 projectors types defined by their rated capacity for cobalt-60, the SENTRY 330 and SENTRY 110 projectors. Each projector type is available in either a standard or basic transport package configuration. The standard configuration will most likely be the most commonly used version of the transport package. The basic configuration is the same as the standard configuration but without the array of removable handling rib assemblies.

The Model 867 SENTRY source changer is rated at 330 curies of cobalt-60. Similar to the projectors, the source changer is available in both a standard and basic configuration.

Figure 2.1.is a schematic overview of the SENTRY transport package configuration tree.

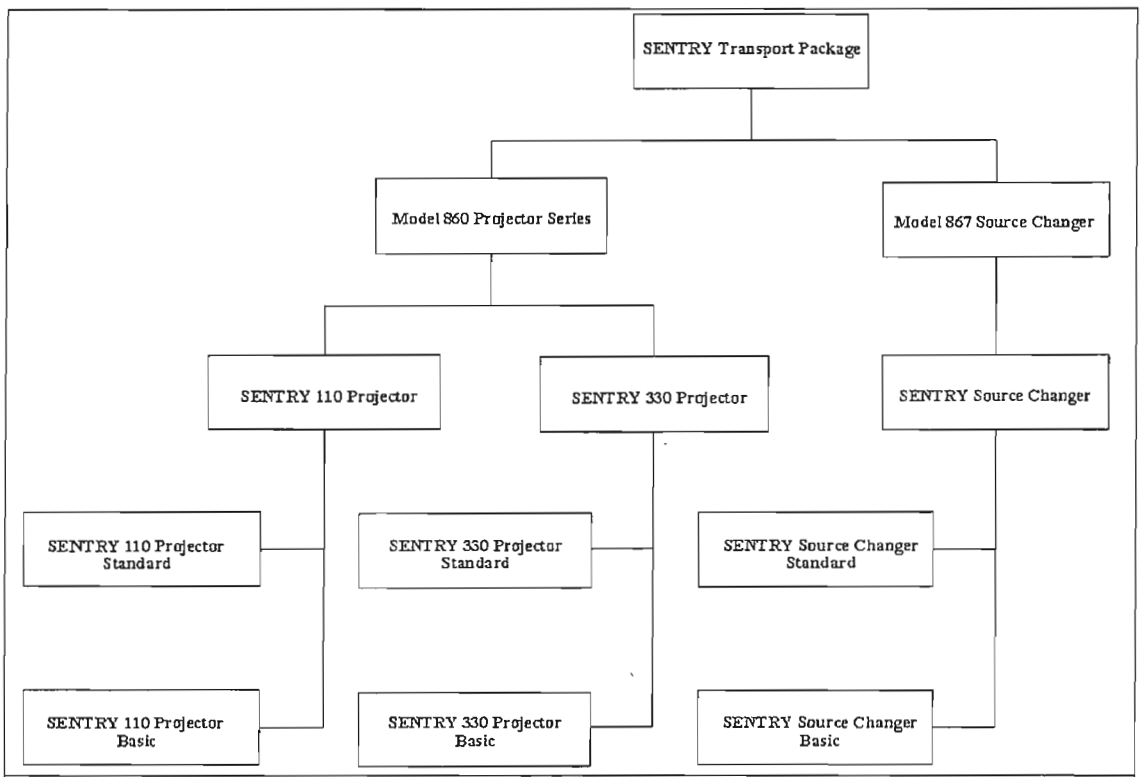

Figure 2.1. SENTRY Transport Package Configuration Tree.

Table 2.1 shows the specific differences between the SENTRY transport package configurations to be tested or evaluated in this test plan.

Table 2.1. SENTRY Transport Package Configurations.

Configuration	Handling Ribs	Active Source Wire Assembly	Active Source Capsule	Max. Package Weight (Lbs.)	Refer to Figure	Source Capacity (Curies of Co60)
SENTRY 330 Projector – Standard	Yes	42465-9 & 42465-10	60011 & 60012	780	2.2	330
SENTRY 330 Projector – Basic	No	42465-9 & 42465-10	60011 & 60012	700	2.3	330
SENTRY 110 Projector – Standard	Yes	42465-8	60011	580	2.2	110
SENTRY 110 Projector – Basic	No	42465-8	60011	500	2.3	110
SENTRY Source Changer – Standard	Yes	42465-8, 42465-9 & 42465-10	60011 & 60012	780	2.2	330
SENTRY Source Changer - Basic	No	42465-8, 42465-9 & 42465-10	60011 & 60012	700	2.3	330

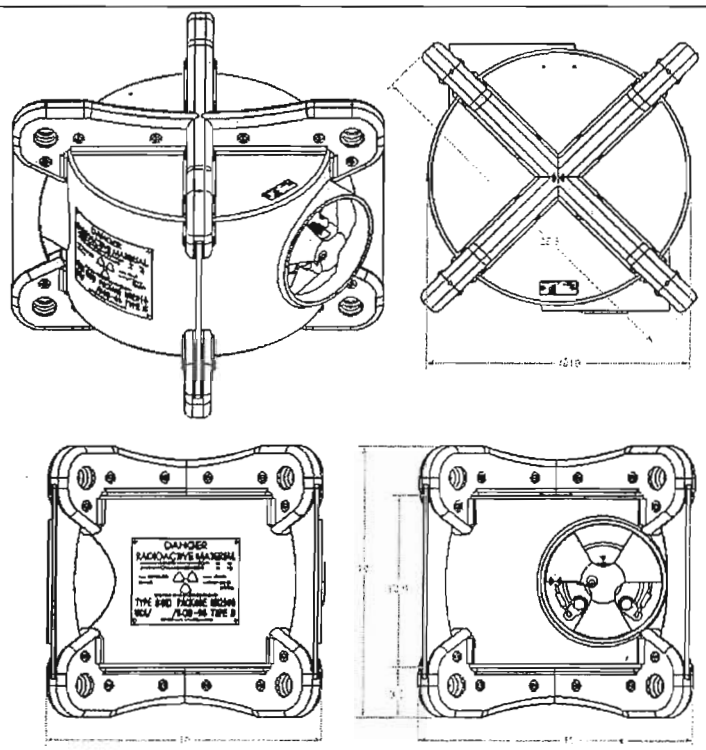

Figure 2.2. SENTRY Transport Package Projector & Changer – Standard Configuration.

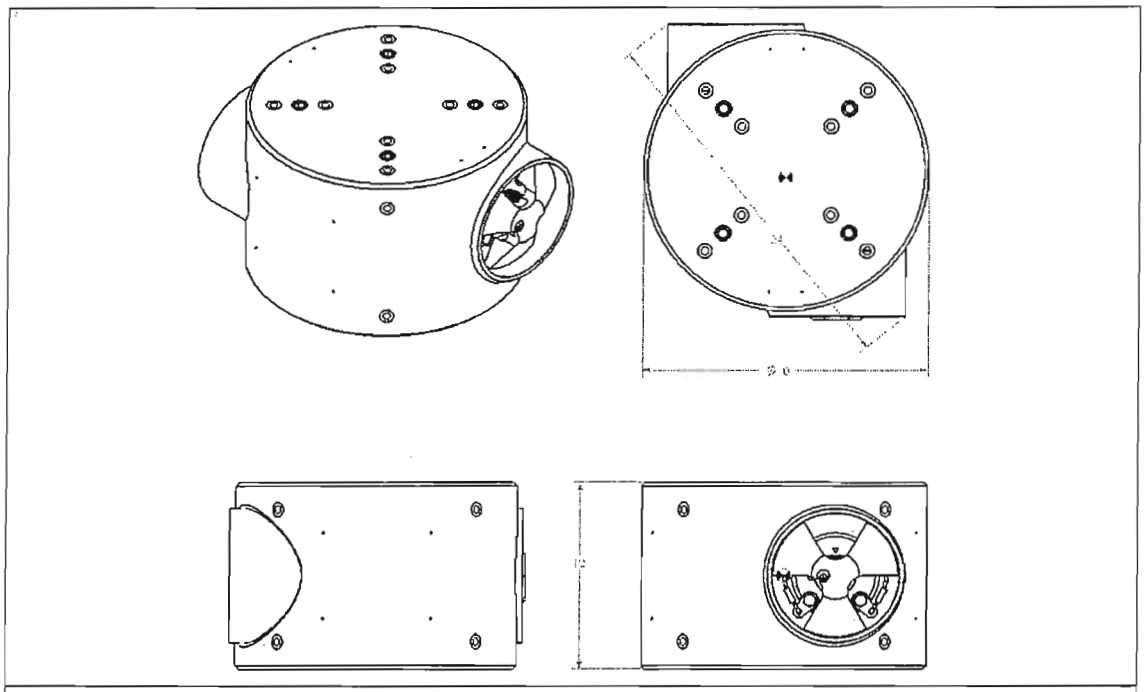

Figure 2.3. SENTRY Transport Package Projector & Changer – Basic Configuration.

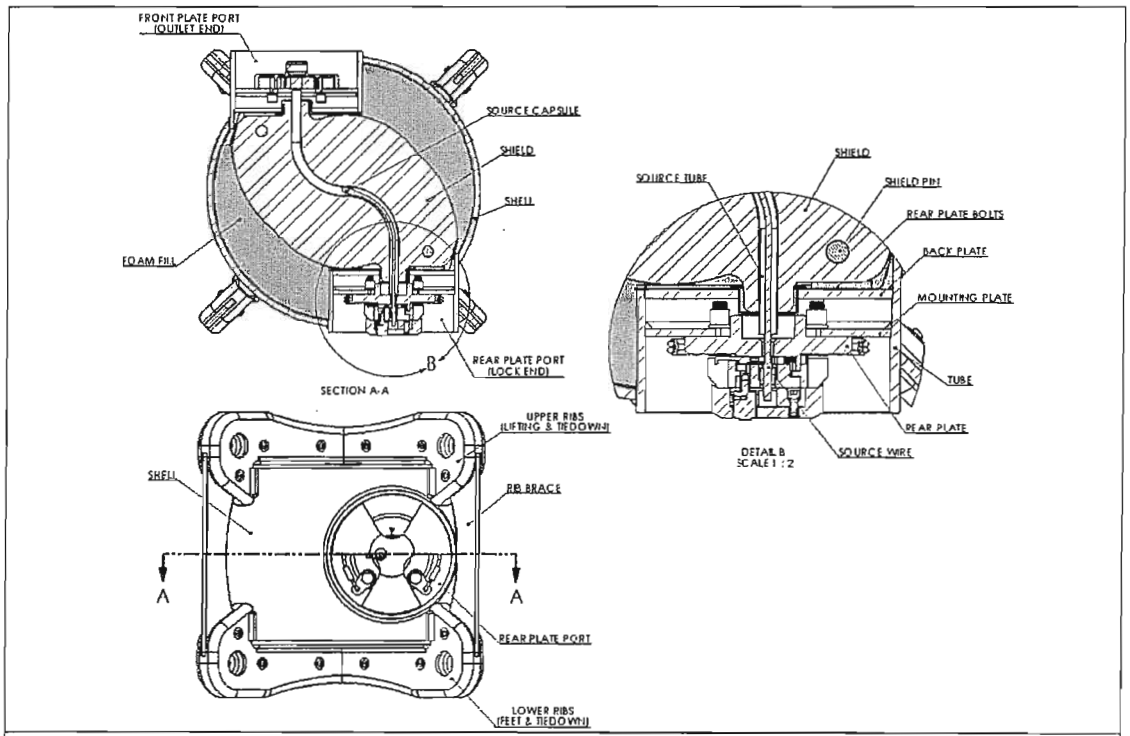

Figure 2.4. SENTRY Transport Package Common Components
Optional Handling Ribs Shown

All configurations include a depleted uranium shield completely encased and fully supported in a cylindrically shaped, stainless steel, welded body (See Figure 2.4). The welded body, also called the shell, includes two, tube shaped, access ports integrally welded on opposite sides of the main body. A twin set of shield mounting bars, one on each side of the shield, are welded to the back plate of each access port tube. Heavy duty, titanium, shield pins pass through the shield and into both shield mounting bars. This creates two positive shield attachment points to the welded body.

The shield source tube ends are also inserted into holes in each of the access port back plates. In addition to this, the shield is captured and centrally located between the top and bottom endplates. This combination of shield securing features provide for a robust shield support system within the welded body.

The inner cavity of the welded body, around the shield, is filled with polyurethane foam. The foam prevents contamination to and from the depleted uranium shield. Previous thermal tests have shown charred polyurethane foam will inhibit the flow of oxygen to the shield and prevent oxidation from occurring during a fire as long as the foam remains confined. This is shown on QSA Global test plan results number 70.

Previous tests have also shown the charred foam will not support the shield at temperatures at or above 800°C. Therefore, the SENTRY relies primarily on the shield support system inside the welded body to hold the shield in place during the thermal test where temperatures reach 800°C.

A titanium source tube, cast into the center of the shield, provides a conduit for the source wire assembly within the shield. The source tube of the SENTRY projector allows the source assembly to pass through the shield. However, the source tube of the SENTRY source changer has a stop to prevent the source assembly from passing through the center of the container. The source capsule is located close to the most shielded location at the center of the shield in all transport configurations.

The two opposing access ports provide a protected mounting space for both the rear-plate and front-plate assemblies. The front-plate assembly is used only on the projector configurations. The source changer configuration uses a rear-plate assembly in each access port.

In all configurations, the rear-plate assembly locks, secures, and locates the source wire assembly to an ideally shielded position within the package. A redundant fastening system attaches the rear-plate to the welded body. The primary attachment method of the fastening system is achieved by four, high strength, stainless steel, hex head bolts, BLT015, threaded into stainless steel rivet nuts assembled into the welded body. The rivet nuts facilitate repair in the event the threads are damaged in the future. An alternate configuration consists of using a threaded stainless steel ring with multiple tapped holes instead of using the rivet nuts. The ring can be rotated to use a different set of tapped holes in the event the initial set becomes damaged.

The secondary method of attachment is by a single stainless steel tamperproof button head screw. This screw reduces and limits unauthorized access to the source. The tertiary method of attachment is provided by two, stainless steel, retaining pins (projectors) or set screws (changer) assembled to the rear-plate. The pins or set screws enter the welded body through a horizontal slot in the mounting plate. The rear-plate is rotated 90 degrees to prevent the pins or set screws from passing back out through the mounting plate where no slot exists. This keeps the rear-plate from separating from the welded body in the event the primary and secondary attachment methods are compromised. The recessed location of the rear-plate mounting surface within the access port tube provides additional restraint preventing rotation and translation on the rear-plate. This effect requires only one screw or bolt to keep the source secured to the shield in the welded body.

There are three rear-plate assembly designs used in the SENTRY transport package. All three designs use the same basic rear-plate assembly concept but the projector and source changer configurations differ in the way the source wire assembly is locked to the package.

Except for the SENTRY 110 projector rear-plate being 0.31 inches thinner than the SENTRY 330 rear-plate, both projector configurations use the same rear-plate assembly. The difference in rear-plate thickness is to allow for the difference in length of the dedicated source wire assemblies used in each projector.

All SENTRY configurations use a selector ring to change and indicate the safety state of the package. When the selector ring is rotated to the "LOCK" position, it securely holds the source wire assembly in place for transport. The selector ring retainer allows the selector ring to rotate and keeps it attached to the rear-plate assembly. The selector ring retainer also provides the housing for the critical spring-loaded locking components and is attached to the rear-plate by 4 stainless steel socket head cap screws.

The projector configurations use the round ball feature of the connector to capture the source wire assembly between two spring-loaded locking components, the sleeve and lock slide, of the rear-plate assembly to secure the source wire assembly to the package.

The source changer configuration uses two spring-loaded fork shaped locking pins to hold the helical wrap feature of the Teleflex wire or cable to secure the source wire assembly to the package. The source changer cannot use the same source wire securing mechanism as the projectors because of two reasons.

1. The source changer accommodates two different length source wire assemblies.
2. The source changer requires the source to enter and exit from the same rear-plate assembly.

A sealed, special form, stainless steel, source capsule contains the radioactive contents of the package. The source capsule and a stainless steel connector are independently swaged to each end of a flexible stainless steel wire or cable to form the source wire assembly.

A dust cover over the source wire connector prevents access to the source assembly until a keyed plunger lock is actuated and the cover removed. This dust cover is in place during transport.

The front-plate assembly of the projector does not hold the source assembly but instead blocks access into or out of the source tube cavity from the end opposite the rear-plate access port.

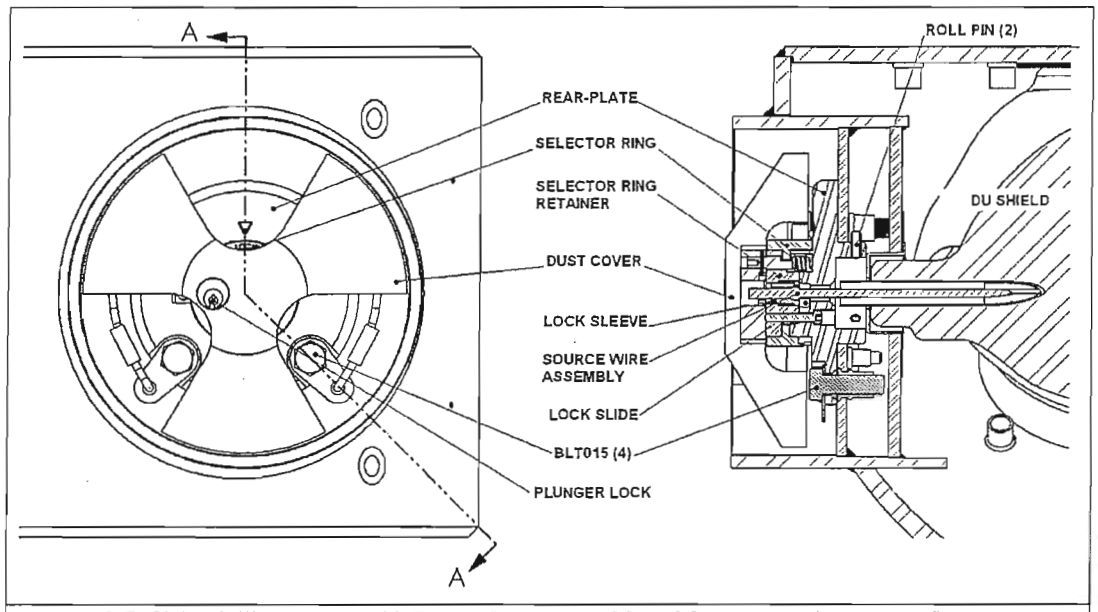

Figure 2.5. SENTRY Projector(s) Rear-plate Assembly with source wire secured

Figure 2.5 shows the rear-plate assembly end of the projector version of the SENTRY transport package. The SENTRY 110 rear-plate is thinner than the SENTRY 330 rear-plate by 0.31 inches to account for the difference in source wire lengths. Except for the shield and the rear-plate thickness, all other components are identical in both projectors.

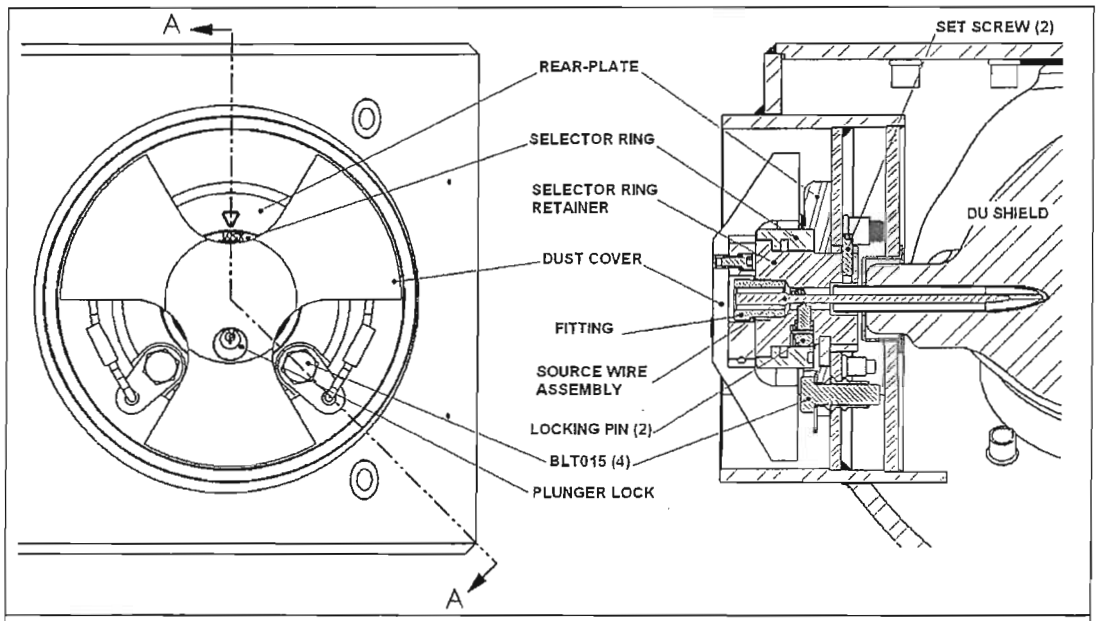

Figure 2.6. SENTRY Source Changer Rear-plate Assembly with source wire secured

Figure 2.6 shows the rear-plate assembly end of the source changer version of the SENTRY transport package. The source changer rear-plate is essentially the same thickness as the SENTRY 330 projector rear-plate. Many of the source changer rear-plate components differ from the projector version, but the rear-plate fastening system is identical.

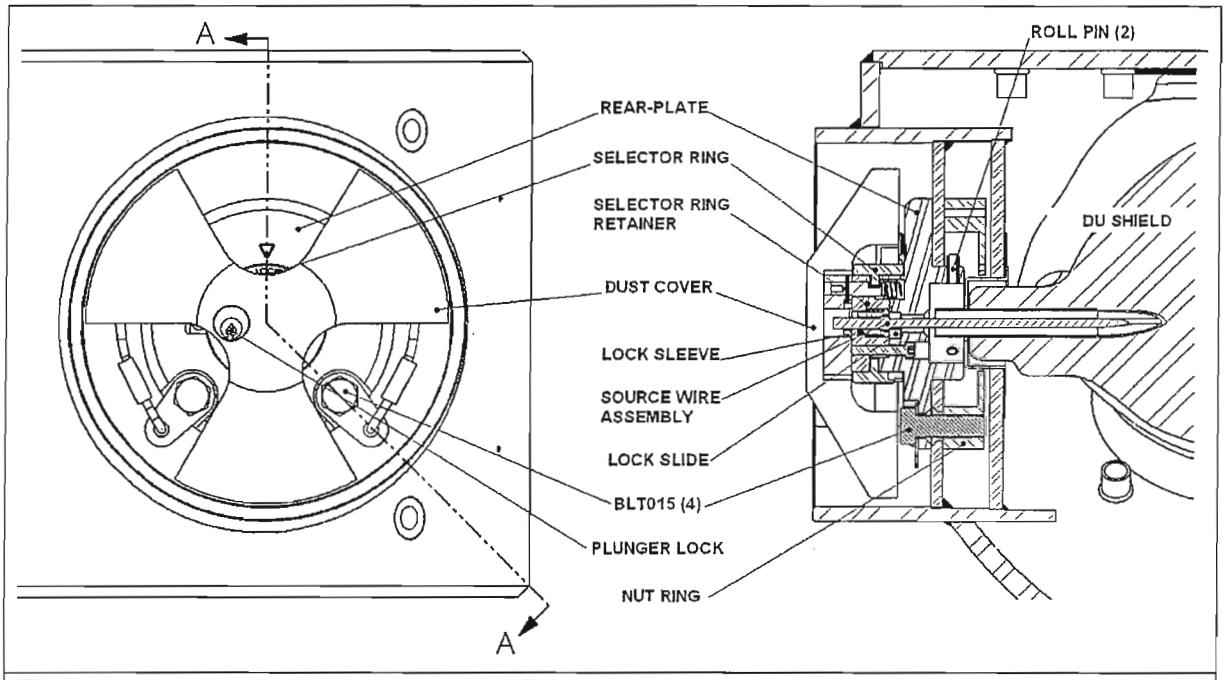

Figure 2.7. SENTRY Projector(s) Alternate Rear-plate Assembly with source wire secured

Figure 2.7 shows an alternate configuration for the rear-plate assembly end on both the projector and source changer versions of the SENTRY transport package. This alternate configuration replaces the rivet nuts with a nut ring. The rivet nuts or, in this case, the nut ring is an integral part of the rear-plate fastening system.

Section 3 Regulatory Compliance

The main purpose of this test plan is to demonstrate that the SENTRY projector/transport package complies with the Type B(U)-96 transport package test requirements of 10 CFR 71 and IAEA TS-R-1 1996.

The sequence of testing shall follow the order given in section 8.1. All test specimens are first subjected to the required normal conditions of transport tests followed by the hypothetical accident condition tests of 10 CFR Part 71.73. This represents the worst case testing sequence for the SENTRY transport package.

3.1 Normal Transport Condition Tests

The **water spray preconditioning** (10 CFR 71.71 (c) (6)) of the package will not be performed as the SENTRY projector/transport package is constructed of waterproof materials throughout. Water spray would not degrade the structural integrity of the SENTRY transport package.

The **compression test** (10 CFR 71.71 (c) (9)) will either be conducted by stacking the required weight onto the package or evaluated by using a finite element analysis (FEA) model. If the test is conducted, then it will follow this test plan. Otherwise, the FEA model evaluation will be documented in a technical report.

The SENTRY transport package shall be subjected to the **penetration test** of 10 CFR 71.71 (c) (10) and then the **1.2 meter free drop test** per 10 CFR 71.71 (c) (7).

3.2 Hypothetical Accident Condition Tests

The **crush test** (10 CFR 71.73 (c) (2)) will not be performed because the capsules containing the radioactive material and attached to the source wire assemblies are qualified as Special-Form radioactive material.

The SENTRY transport package shall be subjected to the **9 meter free drop test** (10 CFR 71.73 (c) (1), and then the **puncture test** (10 CFR 71.73 (c) (3).

The **thermal test** (10 CFR 71.73 (c) (4)) will most likely be assessed and not performed. The assessment will be based on the examination of the damage to the test specimen after the puncture test. Experience from thermal testing the Model 660 & Model 680 transport packages has shown the shield will oxidize and diminish its ability to protect only when the adjacent foam fill is allowed to combust and then fall away from the shield. Charred foam seems to provide enough thermal insulation to prevent the shield from oxidizing as long as the charred foam remains in place. Any damage producing an unintentional opening in the shell or welded body would need to be assessed to determine whether the transport package would pass or fail the thermal test.

The **immersion test** (10 CFR 71.73 (c) (6)) will not be performed. Only the source capsule (containment vessel) is sealed and able to pressurize as a result of 50 feet of water depth. The source capsule is designed and tested to withstand external pressures over 22-lbf/in^2.

3.3 Free Drop Height Adjustment

All free drop test heights specified in 10 CFR Part 71 shall be adjusted higher to allow for SENTRY transport packages built heavier than the test specimen but less than the maximum package weight to comply with 10 CFR Part 71. The actual test specimens will likely weigh less than the maximum weight specified on their respective top level assembly drawings. Table 3.1 compares the test specimen against the maximum transport package weight for each SENTRY transport package configuration.

The actual weight of the SENTRY transport package is directly affected by the following:

1. Minor thickness variations in component materials.
2. Slight polyurethane foam fill density changes as the pre-filled foam ages (self life).
3. Extra shield material layers accumulating on the shield casting as the mold cavity wears.

Table 3.1. SENTRY Transport Package Weight Comparison.

SENTRY Package Configuration	Estimated Test Specimen Weight (Lbs)	Maximum Transport Package Weight (Lbs)	Potential Weight Difference (Lbs)
SENTRY 330 Projector – Standard & SENTRY Source Changer – Standard	734	780	46
SENTRY 330 Projector – Basic & SENTRY Source Changer – Basic	653	700	47
SENTRY 110 Projector – Standard	556	580	24
SENTRY 110 Projector – Basic	475	500	25

The impact energy is equal to the total potential energy just before the package is dropped. The potential energy (PE) is simply equal to the weight (W) of the package multiplied by the height (H) of the drop.

$$PE = W \times H$$

In the potential energy equation, the weight (W) is directly proportional to the height (H). A lighter test specimen can be dropped from a higher drop height in order to produce equivalent impact (potential) energy for a heavier test specimen dropped at a lower height. The following example calculates the adjusted 30-foot free drop height for the SENTRY 330 Projector – Standard configuration.

Drop #1: Maximum package weight = 780 Lbs. and free drop height requirement = 30 feet.

$$PE\ (1) = 780 \times 30 = 23400 \text{ Lbs-Ft}$$

Drop #2: Actual test specimen weight = 734 Lbs. and adjusted free drop height = Unknown feet.

$$PE\ (2) = PE\ (1) = 23400 \text{ Lbs-Ft} = 734 \text{ Lbs} \times H \text{ feet}$$

$$H = 31.9 \text{ feet} = 31 \text{ feet } 11 \text{ inches}$$

The actual adjusted drop heights will be determined once the test specimens are weighed and just before the 30 foot, 4 foot and 1 meter puncture drop test. The adjusted heights will provide impact energy equal to or greater than the maximum transport package weight if dropped at the 10 CFR Part 71 specified drop heights (30 feet free drop, 4 feet free drop, and 1 meter puncture).

Section 4 Discussion on System Failure Modes of Interest

The testing in this plan will attempt to cause failure or malfunction to critical SENTRY transport package components and/or systems needed to protect against elevated dose levels during normal transport and after a hypothetical accident as described in 10CFR part 71. The most critical components are the shield, the rear plate assembly, and the relative position between them. The failure modes of interest are as follows:

Table 4.1. SENTRY Transport Package Failure Modes.

#	Failure Mode	Possible Cause	Target Components
1A	Failure of the depleted uranium (DU) shield to provide sufficient shielding.	An impact from the drop or penetration tests could fracture the shield material.	▪ DU Shield
1B		A fracture of the shells welded cylindrical body from the drop and/or penetration tests could produce an opening large enough to allow the foam to burn away during the fire test. The shield could oxidize in the fire test without sufficient foam.	▪ Welded Body ▪ DU Shield ▪ Foam Fill
2	Failure of the shield retaining structure to hold the shield in place relative to the source assembly.	Abrupt changes in motion and damage from the drop and penetration tests could shift the shield away from the source.	▪ Welded Body ▪ DU Shield ▪ Source Assembly
3	Failure or malfunction of the rear plate assembly to keep the source assembly in a sufficiently shielded location.	Abrupt changes in motion and damage from the drop and penetration tests could shift the source away from the shield.	▪ Welded Body ▪ DU Shield ▪ Rear Plate ▪ Source Assembly
4	Failure of the rear plate attachment hardware to retain the rear plate to the package.	Abrupt changes in motion and damage from the drop and penetration tests could remove the source from the shield.	▪ Rear Plate ▪ Rear Plate Bolts

4.1 Pass Criteria

Upon conclusion of any test, the test specimen shall be considered passing the test if it does not show signs of loss or dispersal of radioactive or simulated radioactive contents and show no substantial reduction in the effectiveness of the packaging. To pass, the test specimen must also not show an increase in external surface radiation levels above 200-mR/hr after any normal transport test and above 1-R/hr at 1 meter (40 inches) from the packages external surface after the hypothetical accident condition tests.

Section 5 Assessment of Package Conformance

5.1 Normal Conditions of Transport (71.43 (f))

There should be no loss or dispersal of radioactive contents, no significant increase in external surface radiation levels and no substantial reduction in the effectiveness of the packaging.

IAEA TS-R-1 1996 paragraph 646 stipulates the same criteria except that it also requires that the loss of shielding integrity should not result in more than a 20% increase in the radiation level at any external surface of the package.

5.2 Hypothetical Accident Conditions (71.51 (a)(2))

There should be no escape of radioactive materials greater than A_2 in one week and no external dose rate greater than 1 R/hr at 1m from the external surface with the maximum radioactive contents which the package is designed to carry.

5.3 Transport Package Contents

The SENTRY transport package is designed to carry a special form cobalt-60 source capsule. Containment of the radioactive source is tested at manufacture. The source capsule design has been certified in accordance with the performance requirements for special form as specified in 10 CFR Part 71 and IAEA TS-R-1 1996.

This test plan therefore does <u>not</u> discuss/specify tests associated with the containment of the radioactive source. The purpose of the tests is to demonstrate that the source remains shielded within the limits specified by the regulations.

Since source integrity has been demonstrated through special form testing, a simulated source will be used during testing of the package. The radiation levels after testing will be measured by replacing the simulated source with an active source. The post-test measurements will be compared with pre-test measurements to verify the source has not shifted within the shield.

Section 6 Construction and Condition of Test Specimens

The SENTRY transport package test specimens shall be constructed in accordance with QSA Global engineering drawings and Quality Assurance Program. The drawings and quality program accurately represent the intended design along with methods for manufacturing and verifying the finished product.

Figure 6.1 Shows the SENTRY transport package – test specimen configuration tree.

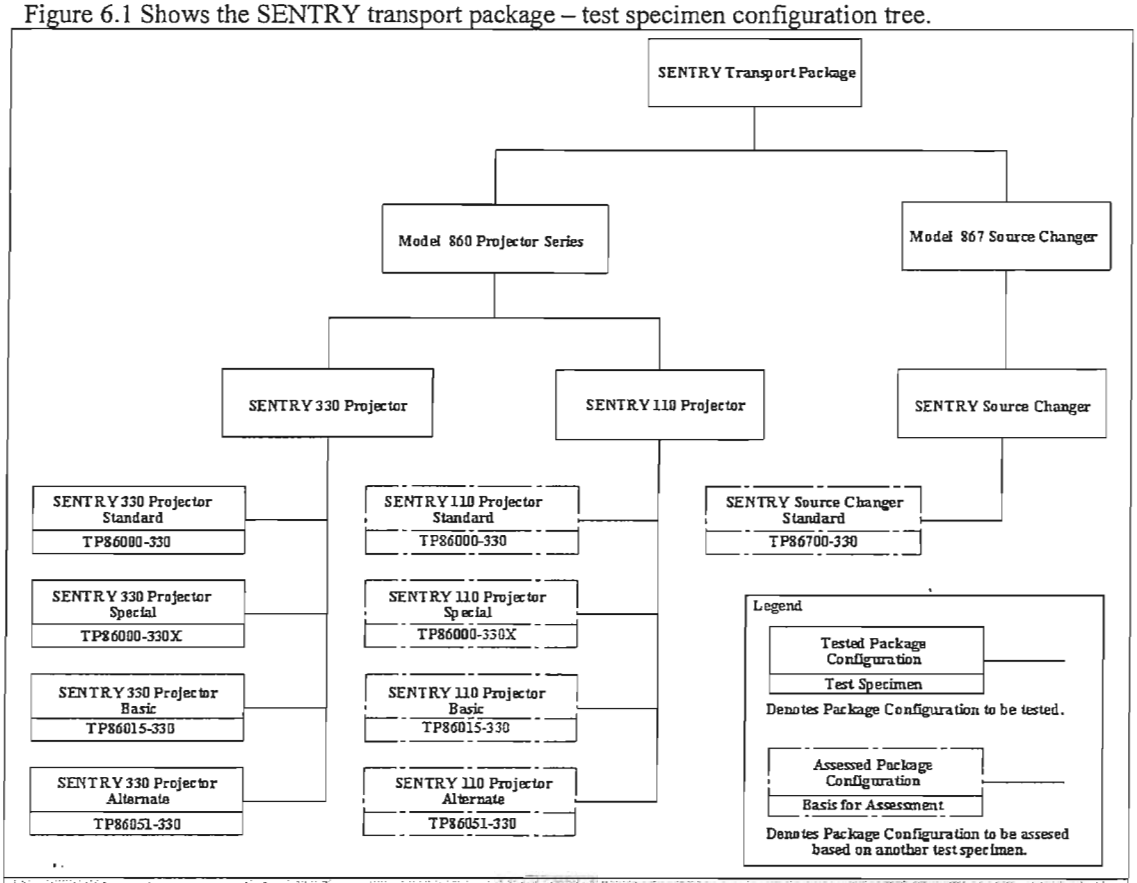

Figure 6.1. SENTRY Test Specimen Configuration Tree.

Table 6.1 shows the test specimen build documentation and identification.

Table 6.1. Test Specimen Manufacturing Documentation and Identification

Test Specimen Configuration	Drawing Number	TMI	Serial Number(s)
SENTRY 330 Projector – Standard	TP86000-330	190	TP180F
SENTRY 330 Projector – Special	TP86000-330X	199	TP180G
SENTRY 330 Projector – Basic	TP86015-330	189	TP180A, TP180B, TP180C, TP180D, TP180E
SENTRY 330 Projector – Alternate (Nut Ring)	TP86051-330	228	TP180H
SENTRY Source Changer – Standard	TP86700-330	192	TP180J

6.1 Test Specimen Justification

The **SENTRY 330 Projector – Standard** configuration is the heaviest package of all the SENTRY transport packages. The array of handling rib assemblies of this configuration makes it heavier than the Basic configuration by about 80 pounds. However, the handling ribs will provide protection and substantial impact energy absorption in certain free drop orientations when they are present. A conservative worst case free drop condition would be to drop the "non-ribbed" Basic configuration at a higher drop height to account for the 80 pound weight difference.

Based on the above reasoning, the **SENTRY 330 Projector – Basic** configuration shall be tested extensively and used as the basis for assessing compliance to the free drop testing requirements of 10 CFR Part 71 and IAEA TS-R-1 1996 for all the other SENTRY transport packages. Some of the other package configurations may be tested as described in this test plan or if the post testing assessment determines the need to do so.

The structure of the **SENTRY 110 Projector** is identical to the SENTRY 330 Projector, except for the thickness of the rear plate and shield mid section (center). The cross sectional area around where the shield attaches to the structure is nearly identical for both the SENTRY 330 & 110 packages. Therefore, the heavier SENTRY 330 configuration would be testing a higher stress, worst case, condition. Drop testing the SENTRY 110 Projector will not be performed. However, if there is sufficient damage to the rear plate assembly, access port and/or mounting surface of the SENTRY 330 after it has been drop tested, then the damage effect to the SENTRY 110 rear plate will be assessed and testing of the SENTRY 110 could be performed at a later date if deemed necessary.

The **SENTRY 330 Projector – Special** configuration is identical to the SENTRY 330 Projector – Standard configuration except it is built without the plastic inserts of the handling rib assemblies. The idea here is to demonstrate compliance in the event the inserts are severely damaged or removed by rough handling and use.

The **SENTRY 330 Projector – Alternate** configuration is identical to the SENTRY 330 Projector – Standard configuration except the alternate configuration has a nut ring in place of the rivet nuts to attach the rear plate assembly. The need for drop testing the SENTRY 330 Projector – Alternate configuration would be considered only if there were sufficient damage to the SENTRY 330 Projector rear plate assembly, access port and mounting surface.

The structure of the **SENTRY Source Changer** is identical to the SENTRY 330 Projector. There are some differences in the components of the rear plate assemblies. Although the rear plate mounting system is the same for both packages. The need to drop test the SENTRY Source Changer would be considered only if there were sufficient damage to the SENTRY 330 Projector rear plate assembly, access port and mounting surface.

6.2 Structural Materials of Test Specimen

The structural materials of all the SENTRY transport packages are made of type 300 series stainless steel and titanium. The shielding materials are depleted uranium and tungsten. Fasteners needed to retain and secure important safety components are made of type 17-4 PH and type 300 series stainless steel. Type 300 series stainless steels are defined as the austenitic group of stainless steel materials identified under the Unified Numbering System (UNS) S3xxxx, where "xxxx "denotes the sub class of the material in the numbering system. The non-safety related components are made from brass, copper, plastic, and rubber.

6.3 Temperature Conditions

The fracture toughness (strength and ductility) of the SENTRY transport package structural materials will not change significantly within the temperature range of minus 40°F to plus 100°F. Within this temperature range, the DU shield will exhibit only slightly less ductility than the other structural materials.

Test plan/report 79 shows compressive impact strength of the polyurethane foam changes very little between minus 40°F to plus 100°F. The foam is not the only feature limiting the shields movement during the impact of the drop test. The shield relies heavily on the titanium pins and the welded structure to help keep it secure and in place. Therefore, all test specimens will be dropped at ambient temperature since the temperature within the minus 40°F to plus 100°F temperature range is not expected to change the results of any of the tests.

6.4 Pressure Conditions

Except for the source capsule, the transport package is open to the atmosphere and therefore in equilibrium with the outside pressure of the package. The internal operating pressure of the containment system, namely the source capsule, has been tested to withstand the pressure range of 3.5 PSI absolute to 20 PSI absolute. The tests will therefore be performed at atmospheric pressure.

6.5 Vibration Conditions

Vibration normally occurring in transport will be addressed under test plan 178, ISO/ANSI performance testing, and is not expected to adversely affect the structural aspects of the transport package. The rear plate assembly fastening system however could possibly be affected by transport vibration. These fasteners are preloaded or stretched within the materials proportional limit by a specified torque applied during assembly. The assembly preload is designed to withstand dynamic forces and vibration normal to transport. The vibration test of test plan 178 will verify the performance of the fastening system when subjected to vibration normally occurring in transport.

Section 7 Material and Equipment List

The equipment list worksheets in Section 9 identify the equipment required, with additional space to list other necessary equipment and measuring instruments needed to perform the tests. Additional materials and equipment used to facilitate the tests will be listed as needed.

Section 8 Test Procedure

All test specimens must follow the planned sequence presented below. Any change to the planned drop orientations shall require a documented justification and description for the new orientation.

8.1 Test Sequence

1. Test specimen preparation and inspection.
2. Compression test or analysis (10 CFR 71.71 (c) (9))
3. Penetration test (10 CFR 71.71 (c) (10))
4. 2m (Four-foot) free drop test (10 CFR 71.71(c) (7))
5. Optional test inspection (radiation profile)
6. 9m (30-foot) free drop test (10 CFR 71.73(c) (1))
7. Puncture test (10 CFR 71.73(c) (3))
8. Test inspection.
9. Thermal assessment (10 CFR 71.73(c) (4)).
10. Final test inspection and/or assessment.
11. Test specimen storage.

8.2 Test Specimen Preparation and Inspection

1. Manufacture the SENTRY test specimen per table 6.1.
2. Inspect the test specimens to ensure that:
   - All fabrication and inspection records are documented in accordance with the QSA Global Quality Assurance Program.
   - The test specimens comply with the requirements of the drawing.
3. Perform and record the radiation profile in accordance with QSA Global Work Instruction WI-Q-1806.
4. Engineering, Regulatory Affairs and Quality Assurance will jointly verify that the test specimens comply with the drawings and the QSA Global Quality Assurance Program.
5. Prepare the test specimens for transport.

8.3 Drop Test Orientation Overview

This section provides an overall look at the test specimen orientations for each test.

Table 8.3 Free Drop Test Orientation Overview

Drop Orientation #	Test Specimen Serial Number	Impact Point	Diagram	Failure Mode(s)
1	**SENTRY 330 Projector – Basic Configuration** Serial Number: **TP180A**	Hit square on the rear plate port.	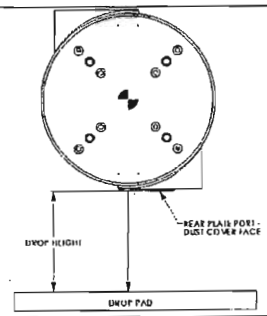	Failure modes **#2 & #3**: attempt to shift shield enough to damage source wire and/or **#4**: break rear plate attachment bolts.
2	**SENTRY 330 Projector – Basic Configuration** Serial Number: **TP180B**	Hit the edge of the rear plate port.	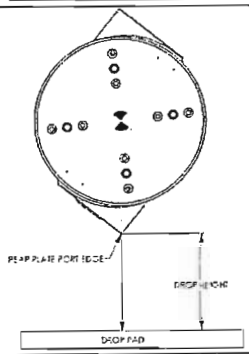	Failure mode **#4 & #3**: attempt to bend port enough to break rear plate attachment bolts or other important lock parts.
3	**SENTRY 330 Projector – Basic Configuration** Serial Number: **TP180C**	Hit on the side of the shell directly on the seam weld.	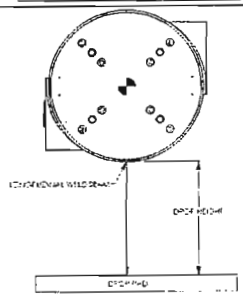	Failure mode **#1B**: attempt to fracture shell seam weld and/or **#2**: shift shield away from source.
4	**SENTRY 330 Projector – Basic Configuration** Serial Number: **TP180D**	Hit on the edge of the shell directly on the seam weld.	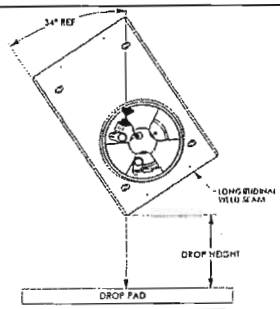	Failure Mode **#1B**. Attempt to fracture shell longitudinal and edge welds.

5	**SENTRY 330 Projector – Basic Configuration** Serial Number: **TP180E**	Hit square on the top surface of the welded body.	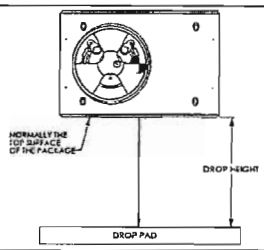	Failure mode **#1A**: attempt to fracture the shield and/or **#2 & #3**: shift shield away from source.
6	**SENTRY 330 Projector – Standard Configuration** Serial Number: **TP180F**	Evaluate after drop orientation #1 thru #5	Based on worst case damage from drop orientations #1 thru #5.	TBD
7	**SENTRY 330 Projector – Special Configuration** Serial Number: **TP180G**	Evaluate after drop orientation #1 thru #5	Based on worst case damage from drop orientations #1 thru #5.	TBD
8	**SENTRY Source Changer** Serial Number: **TP180J**	Evaluate after drop orientation #1 thru #5	Based on worst case damage from drop orientations #1 thru #5.	TBD
9	**SENTRY 330 Projector – Basic Alternate Configuration** Serial Number: **TP180H**	Evaluate after drop orientation #1 thru #5	Based on worst case damage from drop orientations #1 thru #5.	TBD

8.4 Compression Test or Analysis

The compression test is a normal condition of transport test. The package is subjected for 24 hours to a compressive load applied uniformly to the top and bottom of the package in the position in which the package would normally be transported. The compressive load must be equivalent to either 5 times the weight of the package or 2 lbf/in^2 times the vertically projected surface area of the package, whichever is greater.

The maximum package weight is 780 lbs per table 3.1. Five times the maximum package weight is equal to 3900 lbs. The total vertically projected surface area of the package is 255 in^2. This area times 2 lbf/in^2 is equal to 510 lbs. Therefore, 3900 lbs will be applied to the package for the compression test.

8.4.1 Compression Test Set-up

To set up a package for the compression test:

1. Place the test specimen in its normal transport orientation.
2. Gradually and uniformly apply the 3900 lbs load to the top surface of the test specimen.
3. Set and start the timer for 24 hours.
4. Measure and record the ambient temperature.
5. Photograph the set-up.
6. After 24 hours, remove the applied 3900 lbs load.
7. Record the damage to the package and take a photographic record.

8.4.2 Compression Test Assessment

Upon completion of the test, **Engineering, Regulatory Affairs** and **Quality Assurance** team members will jointly take the following actions:

- Review the test execution to ensure that the test was performed in accordance with 10 CFR 71, IAEA TS-R-1 1996, and this test plan.
- Make a preliminary evaluation of the specimens relative to the requirements of 10 CFR 71 and IAEA TS-R-1 1996.
- Assess the damage to each specimen to decide whether testing of that specimen is to continue.

8.5 Penetration Test

The penetration test is a normal conditions of transport test. Impact of the hemispherical end of a vertical steel cylinder of 3.2 cm (1.25 in) diameter and 6 kg (13 lbs) mass, dropped from a height of 1 m (40 in) onto the exposed surface of the package that is expected to be most vulnerable to puncture. The long axis of the cylinder must be perpendicular to the package surface.

The 3/8 inch thick stainless steel welded body of the SENTRY transport package will easily withstand and probably just dent slightly from the impact of the 13 lbs steel cylinder (penetration bar) dropped from 40 inches. The most vulnerable exposed surface of the package is the plunger lock of the rear plate dust cover. Therefore, the plunger lock will be the target for this test.

8.5.1 Penetration Test Set-up

To set up a package for the penetration test:

1. Orient the specimen so the plunger lock of the rear plate dust cover faces up towards the dropping direction of the penetration bar.
2. Raise the penetration bar
3. Measure and record the ambient temperature.
4. Photograph the set-up.
5. Drop the penetration bar.
6. Record the damage to the package and take a photographic record.

8.5.2 Penetration Test Assessment

Upon completion of the test, **Engineering**, **Regulatory Affairs** and **Quality Assurance** team members will jointly take the following actions:

- Review the test execution to ensure that the test was performed in accordance with 10 CFR 71, IAEA TS-R-1 1996, and this test plan.
- Make a preliminary evaluation of the specimens relative to the requirements of 10 CFR 71 and IAEA TS-R-1 1996.
- Assess the damage to each specimen to decide whether testing of that specimen is to continue.

8.6 1.2m & 9m Free Drop Tests

The 1.2 meter free drop test is a normal conditions of transport test. This test is meant to induce normal transport damage as a precondition the test specimen for the hypothetical accident sequence.

The 9 meter free drop test is the hypothetical accident conditions test. This test is meant to demonstrate compliance to the hypothetical accident sequence.

Unless determined otherwise, the 9 meter drop orientation will be identical to the 1.2 meter orientation for all five differently oriented test specimens.

The 1.2 meter (4 foot) and 9 meter (30 foot) drop heights are minimum heights. The actual or adjusted free drop heights shall be recorded on the test data sheet.

8.6.1 1.2m & 9m Free Drop Test Set-up

To set up a package for the specified drop test:

1. Place each specimen on the drop surface and position it according to the specimen-specific orientation.
2. Raise the package so that the impact target is at the specified height above the drop surface. Ensure the center of gravity is over the impact point
3. Measure and record the ambient temperature.
4. Photograph the set-up.
5. Start the video recorder.
6. Drop the package.
7. Stop the video recorder.
8. Record the damage to the package and take a photographic record.

8.6.2 Specimen TP180A 1.2m & 9m Free Drop Test Orientation

Figure 8.6.2 shows the package orientation for Specimen TP180A. This drop orientation attempts to induce failure modes #2 & #2 (Table 4.1.), shift the shield enough to break the source wire and/or failure mode #4, remove the rear-plate attachment bolts, BLT015. The impact surface is on the extended face of the dust cover and rim of the rear-plate access port.

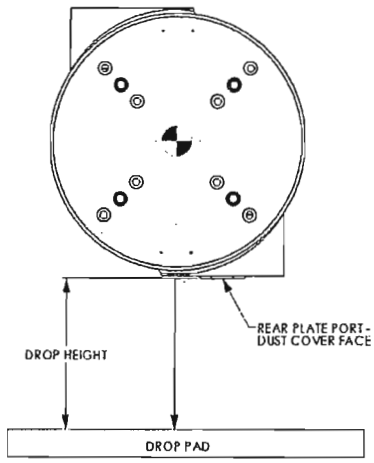

Figure 8.6.2: Specimen TP180A Free Drop Orientation

8.6.3 Specimen TP180B 1.2m & 9m Free Drop Test Orientation

Figure 8.6.3 shows the package orientation for Specimen TP180B. The drop orientation attempts to induce failure mode #3 & #4, damage the rear-plate access port to bend the rear-plate and remove the rear-plate attachment bolts, BLT015 or other important lock parts. The impact point is the edge of the rear-plate access port.

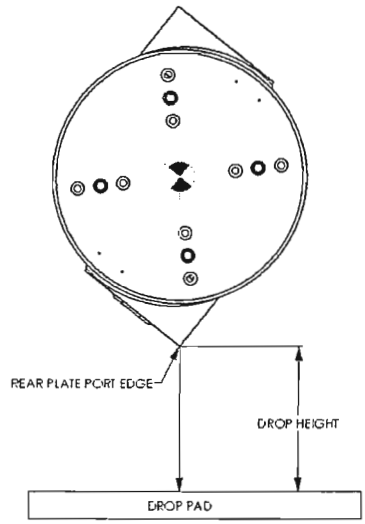

Figure 8.6.3: Specimen TP180B Free Drop Orientation

8.6.4 Specimen TP180C 1.2m & 9m Free Drop Test Orientation

Figure 8.6.4 shows the package orientation for Specimen TP180C. The drop orientation attempts to induce failure mode #1B, fracture the shells seam weld and/or #2, shift the shield away from the source. The impact point is on the side of the shell directly on the seam weld.

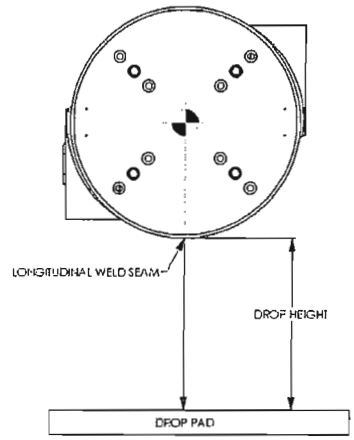

Figure 8.6.4: Specimen TP180C Free Drop Orientation

8.6.5 Specimen TP180D 1.2m & 9m Free Drop Test Orientation

Figure 8.6.5 shows the package orientation for Specimen TP180D. The drop orientation attempts to induce failure mode #1B, fracture the shell longitudinal and edge welds. The impact point is on the edge of the shell directly on the seam weld.

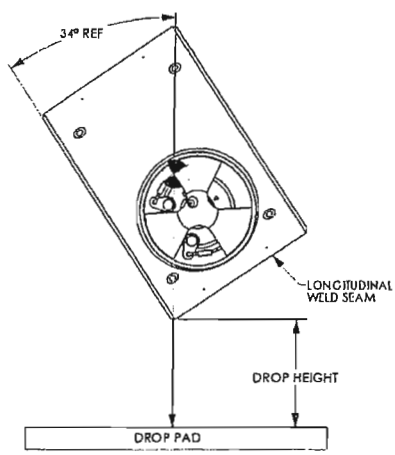

Figure 8.6.5: Specimen TP180D Free Drop Orientation

8.6.6 Specimen TP180E 1.2m & 9m Free Drop Test Orientation

Figure 8.6.6 shows the package orientation for Specimen TP180E. The drop orientation attempts to induce failure mode #3, shift the shield away from the source and/or #1A, fracture shield to cause a reduction in shielding. The impact point is square on the top surface of the package.

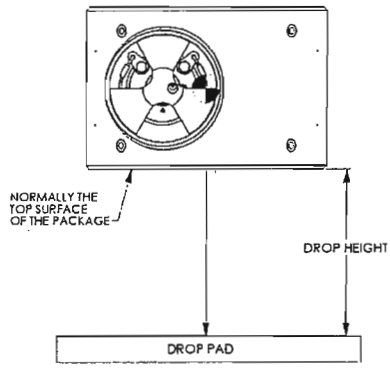

Figure 8.6.6: Specimen TP180E Free Drop Orientation

8.6.7 1.2m & 9m Free Drop Test Assessment

Upon completion of each test, **Engineering, Regulatory Affairs** and **Quality Assurance** team members will jointly take the following actions:

- Review the test execution to ensure that each test was performed in accordance with 10 CFR 71, IAEA TS-R-1 1996, and this test plan.
- Make a preliminary evaluation of the specimens relative to the requirements of 10 CFR 71 and IAEA TS-R-1 1996.
- Assess the damage to each specimen to decide whether testing of that specimen is to continue.
- Assess the damage on each specimen at the rear-plate attachment area to determine whether testing the thinner rear-plate of the SENTRY 110 Projector – Basic configuration needs to performed.
- Evaluate the condition of each specimen after the 1.2m free drop test to determine what changes, if any, are necessary in package orientation in the 30-foot drop test to achieve maximum damage.
- Evaluate the condition of each specimen after the 9m free drop test to determine what changes, if any, are necessary in package orientation in the puncture test to achieve maximum damage.

8.7 Puncture Tests

The package is dropped from a height of at least 1m (40") onto the puncture billet. This test uses the 12" high puncture billet. The billet meets the minimum height (8") required in 10 CFR 71.73(c) (3). The specimen has no projections or overhanging members longer than 12" which could act as impact absorbers, allowing the billet to cause the maximum damage to the specimen. The billet is to be bolted to the drop surface used in the drop tests.

The justification for each puncture orientation is the same as the orientation for the 30-foot drop test. If the orientation needs to be changed, the new orientation must be documented and approved with a justification describing how it would be a worst condition than the planned orientation.

8.7.1 Puncture Test Set-up

NOTE: *Because each test is designed to add to damage inflicted on a specific component or assembly in the preceding test, it is important that each specimen maintain its identity throughout the battery of tests and that the set-up instructions specific to the specimen are strictly followed.*

To set up a package for the puncture test:

1. Measure and record the weight of the test specimen.
2. Measure and record the ambient temperature.
3. Position the test package according to the specimen-specific orientations of figure 8.6.2 through 8.6.6 or to an orientation otherwise justified and approved prior to the test.
4. Raise the package so that the impact target is at least 1m (40") between the impact point on the package and the top of the puncture billet.
5. Photograph the set-up.
6. Start the video recorder.
7. Drop the package.
8. Stop the video recorder.
9. Record the damage to the package and take a photographic record.

8.7.2 Puncture Test Assessment

Upon completion of the test, **Engineering, Regulatory Affairs** and **Quality Assurance** team members will jointly take the following actions:

- Review the test execution to ensure that the tests were performed in accordance with 10 CFR 71, IAEA TS-R-1 1996, and this test plan.
- Make a preliminary evaluation of each specimen relative to the requirements of 10 CFR 71 and IAEA TS-R-1 1996.
- Justify and identify the orientation to subject the SENTRY 330 Projector - Standard, SENTRY 330 Projector - Special, SENTRY 330 Projector - Alternate, and SENTRY Source Changer configurations.

8.8 SENTRY 330 Projector - Standard Configuration Test Sequence

Repeat the 4-foot, 30-foot, and puncture drop test sequence on the SENTRY 330 Projector – Standard configuration test specimen per the orientation selected in section 8.7.2. Document and justify the selected orientation.

8.9 SENTRY 330 Projector- Special Configuration Test Sequence

Repeat the 4-foot, 30-foot, and puncture drop test sequence on the SENTRY 330 Projector – Special configuration test specimen per the orientation selected in section 8.7.2. Document and justify the selected orientation.

8.10 SENTRY Source Changer Configuration Test Sequence

Assess the damage to the SENTRY 330 Projector – Standard configuration and determine whether testing is required for the SENTRY Source Changer configuration. If testing is required, then repeat the 4-foot, 30-foot, and puncture drop test sequence on the SENTRY Changer test specimen per the orientation selected in section 8.7.2 or another worst case orientation. Document and justify the selected orientation.

8.11 SENTRY 330 Projector – Alternate Configuration Test Sequence

Assess the damage to the SENTRY 330 Projector – Basic configuration and determine whether testing is required for the SENTRY 330 Projector - Alternate configuration. If testing is required, then repeat the 4-foot, 30-foot, and puncture drop test sequence on the SENTRY 330 Projector – Basic Alternate test specimen per the orientation selected from section 8.7.2 or another worst case orientation. Document and justify the selected orientation.

8.12 Test Inspection

Perform the test inspection after the puncture tests.

1. Measure and record the damage to each of the test specimens.
2. Measure and record the package for signs of any permanent strain.
3. Remove and assess the condition of the simulated source.
4. Reassemble the packages using a representative active source, making sure that the source position and the package configuration are the same as they were immediately after the puncture test.
5. Measure and record a radiation profile of each test specimen in accordance with QSA Global Work Instruction WI-Q-1806.
6. Assess the significance of any change in radiation at the surface and at one meter from the packages.
7. Determine whether it is necessary to radiograph the test specimens for inspection of hidden component damage or failure.
8. Record any damage or failure found in radiograph of the test specimens, if performed.

8.13 Thermal Test Assessment

Each test specimen shall be assessed to determine whether the test specimen will pass the thermal test.

The assessment will be based on the examination of the damage to the test specimen after the puncture test. Experience from thermal testing the Model 660 & Model 680 transport packages has shown the shield will oxidize and diminish its ability to protect only when the adjacent foam fill is allowed to combust and then fall away from the shield. Charred foam seems to provide enough thermal insulation to prevent the shield from oxidizing as long as the charred foam remains in place. Any damage producing an unintentional opening in the shell or welded body would need to be assessed to determine whether the transport package would pass or fail the thermal test.

Engineering, **Regulatory Affairs**, and **Quality Assurance** team members will make a final assessment of each test specimen and jointly determine whether the specimens meet the requirements of 10 CFR 71 and IAEA TS-R-1 1996.

8.14 Test Specimen Storage

Place the test specimens in an appropriate container and store the container in the "low level" waste room. Written management approval is needed to dispose of any test specimen of this test plan. If the specimens are disposed of, then include a copy of the signed disposal approval in the SENTRY design history file.

Section 9 Worksheets

Use the following worksheets for executing the tests of section 8. Each test shall have three worksheets; an equipment list, a procedure checklist, and a data sheet. Record the information onto copies of these worksheets for each test performed.

Attach a copy of the relevant inspection report or calibration certificate after the range and accuracy of the equipment has been verified.

Test Specimen & Equipment List

Test Specimen & Equipment Documentation					
Test Specimen					
Configuration	**Drawing Number**	**Serial Number**	**Attach IIR**	**Attach NCR**	**Attach Route Cards**

Tools & Equipment		
Tool Description	**Enter the Model and Serial Number Mark NA when not used.**	**Attach Inspection Report or Calibration Certificate**
Drop Surface, Drawing No. T10122		
Puncture Billet, Drawing No. T10143		
Penetration Bar, Drawing No. T10129		
Thermometer		
Record any additional tools used to facilitate the test and attach the appropriate inspection report or calibration certificates.		
Signature	**Print Name**	**Date**
Engineering:		
Regulatory:		
Quality Assurance:		

Compression Test Checklist

Test:		
Test Location:		
Step	**Data**	
1. Record test speeimen serial number:		
2. Record the test specimen weight:		
3. Record the ambient temperature (°C):		Instrument S/N:
4. Place the test specimen in its normal transport orientation.		
5. Record compression load (stack weight).		
6. Photograph set-up.		
7. Record the damage to the test specimen. Use a separate sheet and attach, if needed.		
8. Engineering, Regulatory Affairs and Quality Assurance make a preliminary assessment relative to 10 CFR 71. Record the assessment on a separate sheet and attach.		
Test witnessed by (Signature)	**Print Name**	**Date**
Engineering:		
Regulatory Affairs:		
Quality Assurance:		

Penetration Test Checklist

Test:		
Test Location:		
Step	**Data**	
1. Record test specimen serial number:		
2. Record the test specimen weight:		
3. Record the ambient temperature (°C):		Instrument S/N:
4. Identify target location on test specimen.		
5. Photograph set-up with penetration bar touching target location on test specimen.		
6. Lift penetration bar 40 inches from target location on test specimen to lowest point on penetration bar.		
7. Release the penetration bar.		
8. Photograph target location after impact.		
9. Record the damage to the test specimen. Use a separate sheet and attach, if needed.		
10. Engineering, Regulatory Affairs and Quality Assurance make a preliminary assessment relative to 10 CFR 71. Record the assessment on a separate sheet and attach.		
Test witnessed by (Signature)	**Print Name**	**Date**
Engineering:		
Regulatory Affairs:		
Quality Assurance:		

Free Drop & Puncture Test Checklist

Test:		
Test Location:		
Step	**Data**	
1. Record test specimen serial number:		
2. Record the test specimen weight:		
3. Record the ambient temperature (°C):		Instrument S/N:
4. Identify set-up orientation figure:		
5. Record drop height.		
6. Photograph set-up in at least two perpendicular planes.		
7. Begin video recording of the test so that impact is recorded.		
8. Release the test specimen.		
9. Stop the video recorder. Ensure the point of impact and orientation specified in the plan has been achieved.		
10. Record the damage to the test specimen. Use a separate sheet and attach, if needed.		
11. Engineering, Regulatory Affairs and Quality Assurance make a preliminary assessment relative to 10 CFR 71. Record the assessment on a separate sheet and attach.		
Test witnessed by (Signature)	**Print Name**	**Date**
Engineering:		
Regulatory Affairs:		
Quality Assurance:		

Compression Test Data Sheet

Test Unit Model/Serial No.:	Test:
Test Date:	Test Time:
Describe the test orientation:	
Describe on-site inspection (damage, broken parts, etc.):	

On-site test assessment:

- Was the test performed in accordance with 10 CFR 71, IAEA TS-R-1 1996, and this test plan? **Yes or No.**
- Does the test specimen meet the requirements of 10 CFR 71 and IAEA TS-R-1 1996 for this test? **Yes or No.**
- Should testing continue with this test specimen? **Yes or No.** If yes, next test: _____

Engineering: **Regulatory:** **QA:**

Completed by:	Date:

Penetration Test Data Sheet

Test Unit Model/Serial No.:	Test:
Test Date:	Test Time:
Describe the test orientation:	
Describe on-site inspection (damage, broken parts, etc.):	
On-site test assessment: • Was the test performed in accordance with 10 CFR 71, IAEA TS-R-1 1996, and this test plan? **Yes or No.** • Does the test specimen meet the requirements of 10 CFR 71 and IAEA TS-R-1 1996 for this test? **Yes or No.** • Should testing continue with this test specimen? **Yes or No.** If yes, next test: _____ **Engineering:** **Regulatory:** **QA:**	
Completed by:	Date:

Free Drop & Puncture Test Data Sheet

Test Unit Model/Serial No.:	Test:
Test Date:	Test Time:
Describe drop orientation and drop height:	
Describe impact (location, rotation, etc.):	
Describe on-site inspection (damage, broken parts, etc.):	

On-site test assessment:

- Was the test performed in accordance with 10 CFR 71, IAEA TS-R-1 1996, and this test plan? **Yes or No**.
- Does the test specimen meet the requirements of 10 CFR 71 and IAEA TS-R-1 1996 for this test? **Yes or No**.
- Any changes to subsequent drop orientations needed to achieve maximum damage? Especially for the SENTRY 330 Standard, SENTRY 330 Special, and SENTRY Source Changer configurations. **Yes or No**. If yes, then identify and justify.
- Did sufficient damage occur at or on the rear-plate attachment area to warrant further drop testing the SENTRY 110 Projector – Basic configuration because of its thinner rear-plate? **Yes or No**.
- Should testing continue with this test specimen? **Yes or No**. If yes, next test: _____
- Will the test specimen pass the thermal test based on the accumulated damage assessment? Yes or No

Engineering: **Regulatory:** **QA:**

Describe any post-test disassembly and inspection:	
Describe any change in source position (if possible):	
Describe results of radiography (if performed):	
Completed by:	Date:

Test Inspection Data Sheet

Test Specimen Serial No.:	Last Test Performed:
Describe and measure (if appropriate) any damage or broken parts, etc.:	
Describe and measure (if appropriate) any signs of permanent strain or deformation:	
Describe the condition of the simulated source wire assembly.	
Reassemble the package using a representative active source, making sure that the source position and the package configuration is the same as they were immediately after the last test. Measure and record a radiation profile of each test specimen in accordance with QSA Global Work Instruction WI-Q-1806.	
Compare the pre-test dose levels with post-test dose levels at the surface of the package and at 1 meter from the surface of the package.	
Is a radiograph required to inspect for hidden component damage or failure? If radiography is performed, describe any damage or failures found.	
Completed by:	Date:

2.12.2 Test Plan 180 Addendum Revision 0 dated 25 February 2010

QSA GLOBAL	Document Number **F-E-1808-1** **Test Plan Cover Sheet**	Revision 0

TEST PLAN 180
ADDENDUM

SENTRY – Model 860 Projectors & Model 867 Source Changer Type (B) Transport Package Tests

Originator	S. Gomi	Date:	24 Feb 2010

APPROVALS			
Engineering		Date:	25 Feb 10
Regulatory		Date:	25 Feb 10
Quality Assurance	C. Rempfer	Date:	25 Feb 2010

TEST PLAN 180
ADDENDUM

SENTRY - MODEL 860 PROJECTORS & MODEL 867 SOURCE CHANGER TYPE (B) TRANSPORT PACKAGE TESTS

February 24, 2010

Contents

SECTION 1 INTRODUCTION 5

SECTION 2 NORMAL CONDITIONS OF TRANSPORT TEST RESULTS 6

SECTION 3 DESIGN CHANGES TO THE SENTRY PACKAGE 7

SECTION 4 CHANGES TO THE PUNCTURE DROP ORIENTATION 9

APPENDIX 10

Test Plan No. 180 Addendum

Section 1 Introduction

This addendum to test plan 180 outlines the approved changes to the hypothetical accident condition (HAC) tests prompted by the 4-foot free drop test results found during the normal conditions of transport tests conducted earlier. See Test Plan 180 – Report #1.

Except for the changes described herein, test plan 180 shall be followed as planned.

Section 2 Normal Conditions of Transport Test Results

Test Plan 180 – Report #1 provides the results of the normal conditions of transport tests. Two orientations of the 4-foot free drop tests caused damage to components of the lock cover assembly. The roll pins used for attaching the cover pins were cleanly sheared through allowing the dust cover with the lock cover attached to fall way from the rear plate assembly.

The lock cover is a sub component of the plastic trefoil shaped dust cover and is intended to provide protection to the source connector of the source wire assembly. The lock cover acts as a spacer to reduce the damage of an impact to the end face of the source connector. Without the lock cover in place, a hit in the axial direction of the connector could drive the connector through the slot of the lock slide or cause the lock slide to fail. Once past the lock slide, the source wire would be free to move within the shield and potentially increase radiation levels if the source capsule were to move to the less shielded area at the front plate end of the package.

The 4-screws securing the selector ring retainer and ultimately, the source connector to the shield, were found to be slightly twisted after the 4-foot free drop tests in the same orientations causing damage to the lock cover. It was decided to redesign the selector ring retainer securing mechanism to ensure it remains intact and attached to the rear plate after the 30-foot free drop and puncture drop tests.

Section 3 Design Changes to the SENTRY Package

There are two design changes to the SENTRY transport package as a result of the normal conditions of transport testing.

The first involves increasing the size and shape of the pins of the lock cover assembly. The roll pins went from a standard duty, 0.062 diameter pin to a heavy duty, 0.188 diameter pin. The cover pins were changed from a 0.28 diameter headless pin to a 0.38 diameter headed pin. The head prevents the pins from detaching from the rear plate in the event the roll pins were to fail. Figure 3.1 show the original lock cover design and Figure 3.2 shows the design with the current changes.

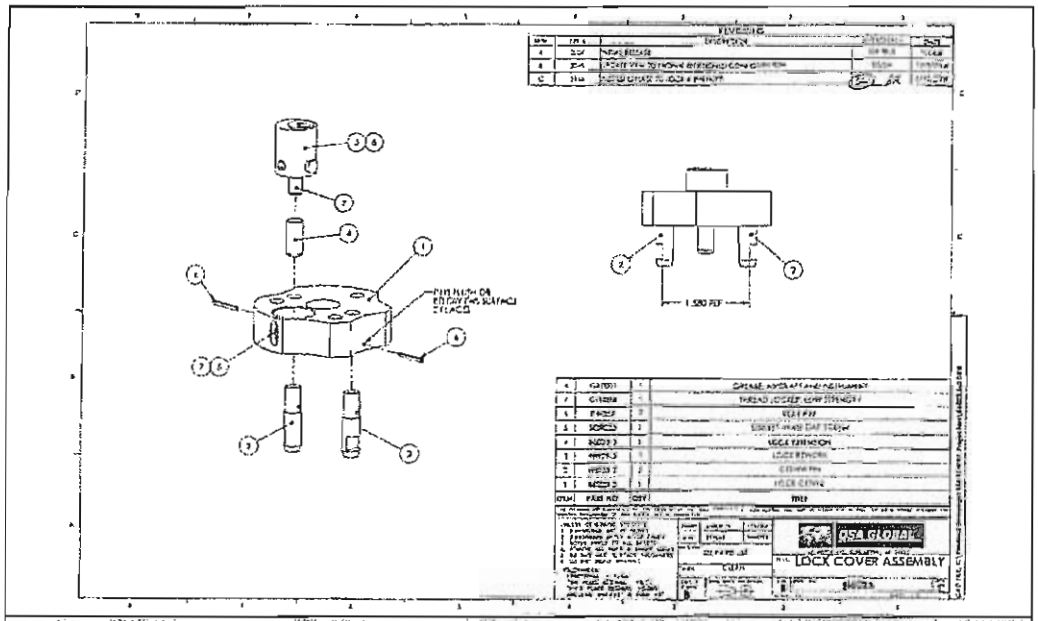

Figure 3.1. Original Lock Cover Design.

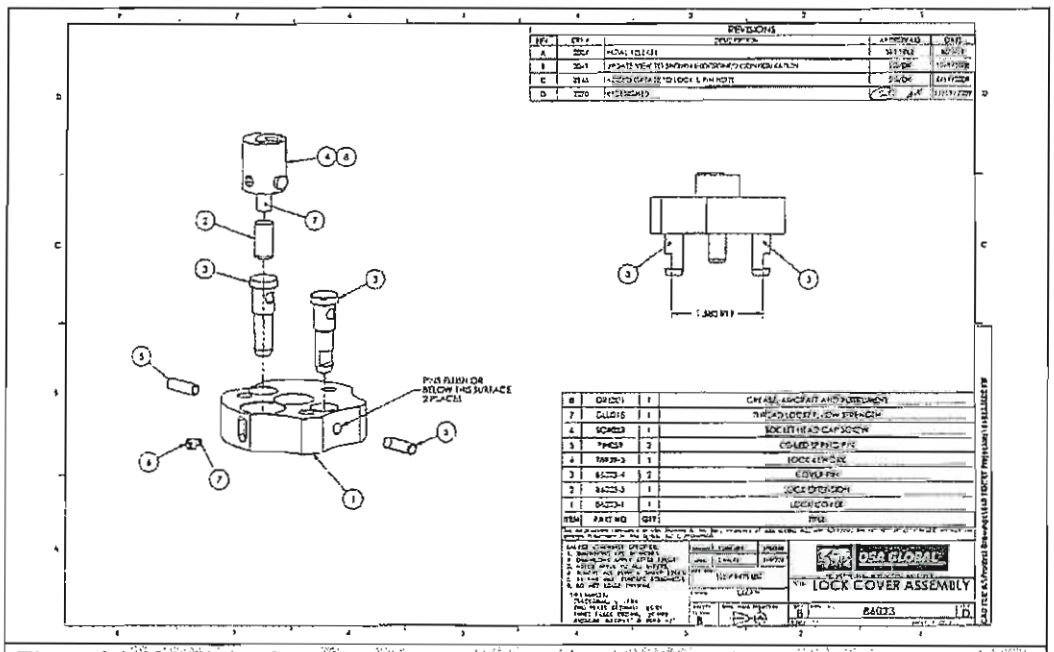

Figure 3.2. New Lock Cover Design

The second change eliminates the 4-screws attaching the selector ring retainer to the rear plate assembly. If these 4-screws were to fail, the selector ring retainer would fall away from the package leaving the source unsecured.

The design change consists of lengthening the selector ring retainer enough to pass through and extend beyond the back side of the rear plate where it gets clamped in place. Thick sections of the clamp engage into slots in the selector ring retainer preventing it from being pulled away from the rear plate. Once the assembly is attached to the package, it is confined within the mounting bore and cannot become detached unless the rear plate assembly mounting hardware is removed.

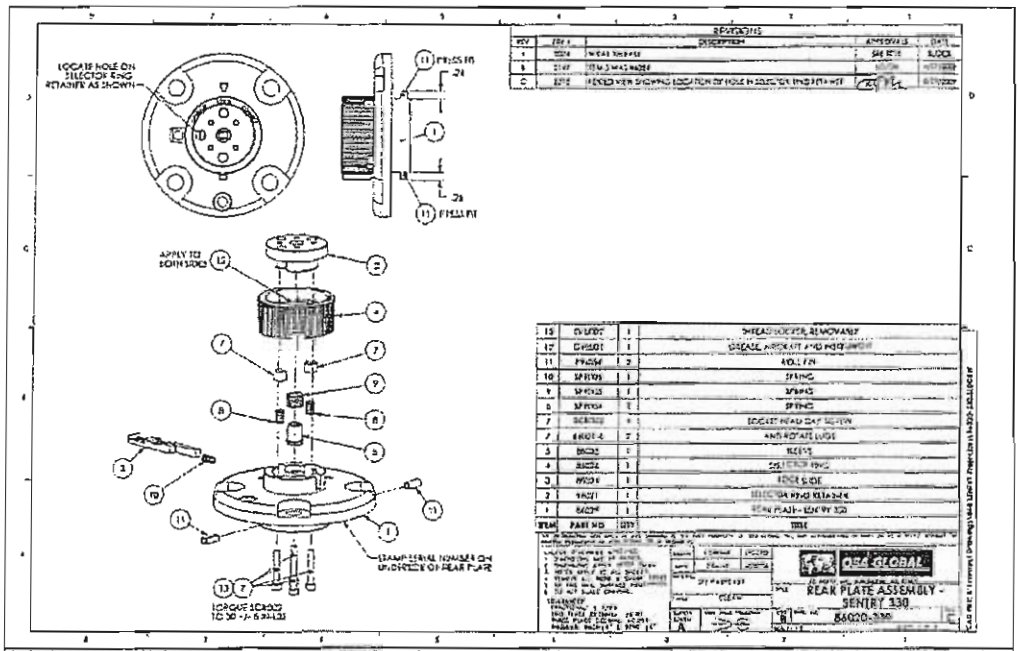

Figure 3.3. Original Rear Plate Assembly Design.

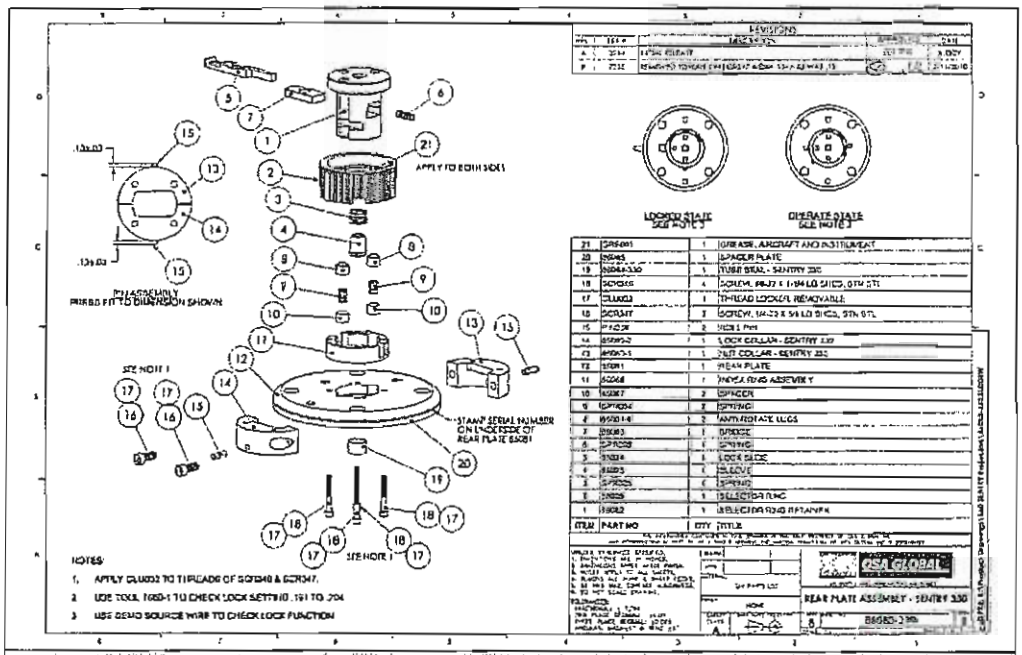

Figure 3.4. New Rear Plate Assembly Design.

Section 4 Changes to the Puncture Drop Orientation

Test Plan 180 identifies the puncture drop orientations to be performed for each test specimen in the same orientation as to be conducted in the 30-foot free drop test. Based on the results of the normal conditions of transport tests, a change to the puncture drop orientation for test specimen TP180E is needed.

During the 4-foot free drop, the flat face drop orientation of test specimen TP180E produced the most severe damage to the lock cover and rear plate assemblies directly affecting the overall safety of the package. Any damage or failure occurring to the lock cover or rear plate assemblies from this orientation in the 30-foot free drop should be further exploited in the puncture drop test.

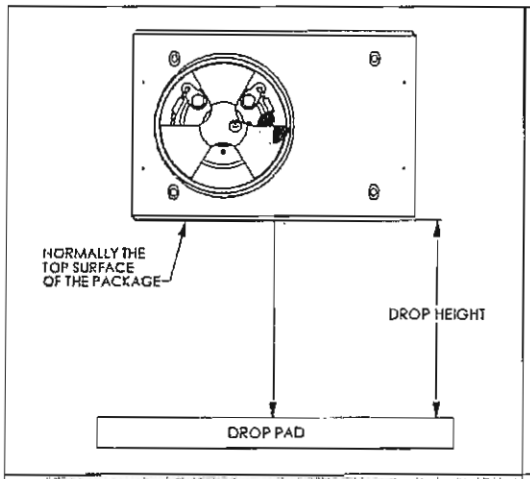

Figure 4.1. 30-foot free drop orientation for test specimen TP180E.

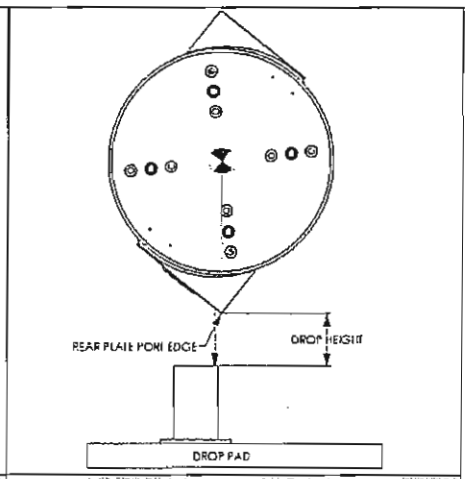

Figure 4.2 Puncture drop orientation for test specimen TP180E.

Appendix

Test Specimen Manufacturing Records stored in network folders:

\\GANYMEDE\Cad\2 Released Files (PDF)\Test Plans & Reports (TP)\TP180 SENTRY Transport Testing\Test Specimen Build\Inspection Records\Rear Plate & Lock Cover Change

\\GANYMEDE\Cad\2 Released Files (PDF)\Test Plans & Reports (TP)\TP180 SENTRY Transport Testing\Test Specimen Build\Route Cards & TMIs\Rear Plate & Lock Cover Change

For:

- Lock Cover Assembly, 86023, with component parts.
- Rear Plate assemblies, 86080-110 & 86080-330 with component parts.

2.12.3 Test Plan 180 Report #1 dated 14 January 2010

QSA GLOBAL	Document Number **F-E-1808-1** **Test Plan Cover Sheet**	Revision 0

TEST PLAN 180 – REPORT #1

SENTRY – MODEL 860 PROJECTORS & MODEL 867 SOURCE CHANGER

NORMAL TRANSPORT PACKAGE TEST RESULTS

Originator	S. Gianni	Date:	6 JAN 2010

APPROVALS			
Engineering	D. Ch	Date:	14 Jan 10
Regulatory	[illegible]	Date:	13 Jan 10
Quality Assurance	C. Rogers	Date:	13 Jan 10

TEST PLAN 180 - REPORT #1

SENTRY TRANSPORT PACKAGE

NORMAL TRANSPORT TEST RESULTS

Rev0

Jan 4, 2010

Contents

SECTION 1 INTRODUCTION 1

SECTION 2 CONSTRUCTION AND CONDITION OF TEST SPECIMENS 2

SECTION 3 REGULATORY COMPLIANCE 4

3.1 Free Drop Height Adjustment 4

SECTION 4 TEST RESULTS 5

4.1 Compression Test 5

4.1.1 Compression Test Requirement 5

4.1.2 Compression Test Analysis 5

4.1.3 Compression Test Assessment 5

4.2 Penetration Test 6

4.2.1 Penetration Test Requirement 6

4.2.2 Penetration Test Results 6

4.2.3 Penetration Test Assessment 7

4.3 1.2 Meter Free Drop Test 8

4.3.1 1.2 Meter Free Drop Test Requirement 8

4.3.2 1.2 Meter Free Drop Test Orientation Review 8

4.3.3 1.2 Meter Free Drop Test Results 9

4.3.3.1 1.2 Meter Free Drop Test – TP180A Results 9

4.3.3.2 1.2 Meter Free Drop Test – TP180B Results 10

4.3.3.3 1.2 Meter Free Drop Test – TP180C Results 11

4.3.3.4 1.2 Meter Free Drop Test – TP180D Results 12

4.3.3.5 1.2 Meter Free Drop Test – TP180E Results 13

4.3.4 1.2 Meter Free Drop Test Assessment 14

4.3.5 Testing the other SENTRY Configurations 14

4.3.5.1 SENTRY 330 or 110 Projector - Standard Configuration 14

4.3.5.2 SENTRY 330 or 110 Projector - Special Configuration 14

4.3.5.3 SENTRY 330 or 110 Projector - Alternate Configuration 14

4.3.5.4 SENTRY Source Changer - Standard Configuration 14

SECTION 5 POST TEST ASSESSMENT 15

APPENDIX 16

Test Plan 180 - Report #1

Section 1 Introduction

This report documents the partial test results of Test Plan 180 and covers only the normal transport tests performed on the SENTRY transport package. The results of the hypothetical accident condition tests of Test Plan 180 will be documented in a report at a later date.

The tests results confirm the SENTRY transport package passes the normal transport test requirements, but will require a design modification to the lock cover and rear plate Posilock mechanism to ensure the package will survive the hypothetical accident condition tests.

A weakness in the lock cover, part number 86023, (a sub assembly of the dust cover) and the rear plate Posilock mechanism, part number 86020-330, was discovered after the 1.2 meter (4-foot) free drop test. The lock cover attachment pins sheared off allowing the cover to fall away from the Posilock, leaving the Posilock and the female connector of the source wire assembly vulnerable to damage in subsequent tests. One of the functions of the cover is to protect the Posilock mechanism and connector during the puncture test after the 30-foot free drop test.

The four #10-32 socket head cap screws, part number SCR002, of the rear plate Posilock assembly were also found to be twisted slightly during the post-test examination. Based on this finding, it is believed, these screws could fail during the more severe 30-foot drop test. The function of the four screws is to hold the selector ring retainer to the package securing the source wire assembly in the shield.

All tests were conducted according Test Plan 180, the Code of Federal Regulations, 10 CFR Part 71.71, revised as of March 31, 1999 and criteria stated in the IAEA Regulations for the Safe Transport of Radioactive Material, No. TS-R-1 1996 Edition (Revised).

Section 2 Construction and Condition of Test Specimens

All SENTRY transport package test specimens are constructed in accordance with QSA Global engineering drawings and Quality Assurance Program. The drawings and quality program accurately represent the intended design along with methods for manufacturing and verifying the finished product.

The five test specimens, serial numbers TP180A thru TP180E, were all built to the basic configuration shown in figure 2.1. The unprotected welded body of the basic configuration represents the worst case test configuration for all the possible failure modes identified in test plan 180.

The standard and/or special configurations with optional handling ribs were not tested because the ribs would provide additional impact absorption and therefore, not considered to be a worst case test condition. The additional weight of the ribs would be offset by the energy absorption the ribs supply upon impact in the 1.2 meter drop test.

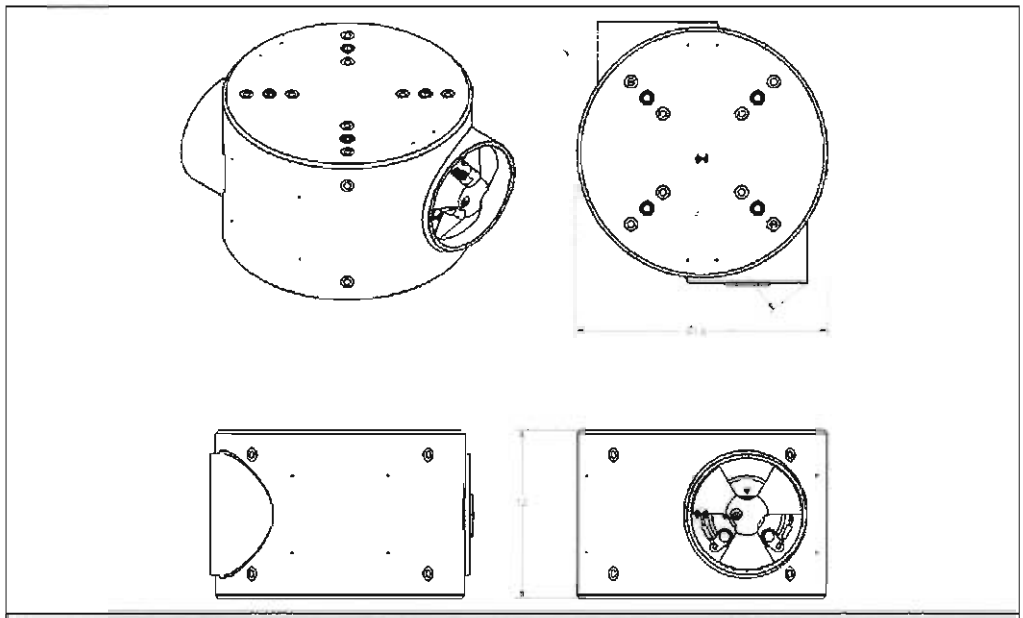

Figure 2.1. SENTRY Transport Package – Basic Configuration.

Table 2.2. Test Specimen Manufacturing Documentation and Identification

Test Specimen Configuration	Drawing Number	TMI	Serial Number(s)
SENTRY 330 Projector – Basic	TP86015-330	189	TP180A, TP180B, TP180C, TP180D, TP180E

There were no significant changes to the test specimen build or construction as described in test plan 180. Any and all deviations and/or changes to the test specimens are recorded on the temporary manufacturing instructions (TMI) for each test specimen (See Appendix).

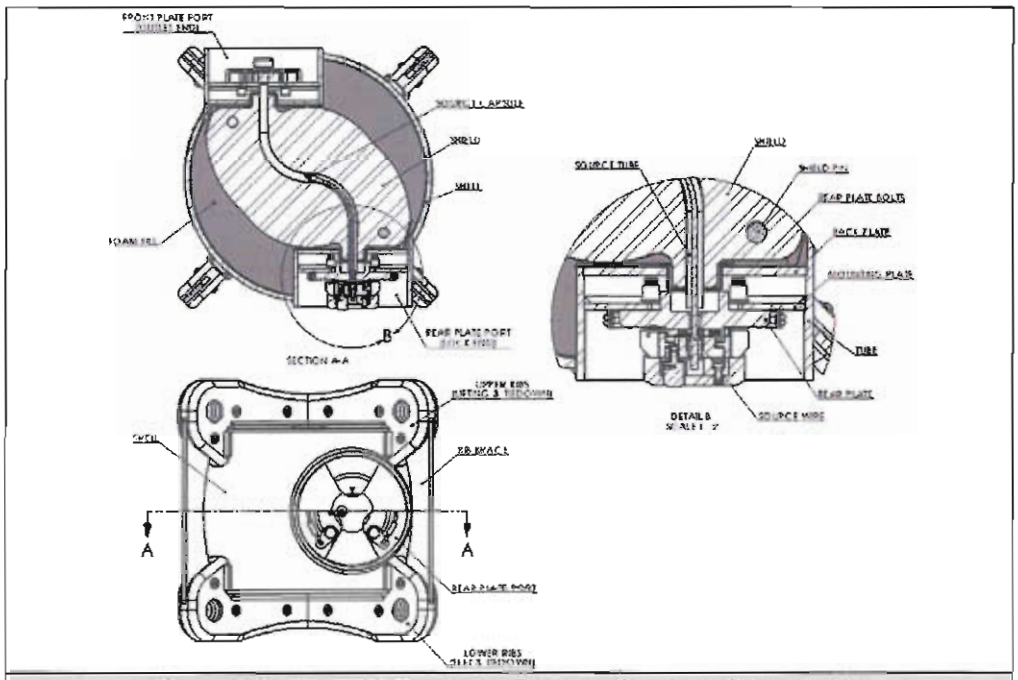

Figure 2.3. SENTRY Transport Package Common Components Optional Handling Ribs Shown

Figure 2.4 shows the rear-plate and Posilock assembly of the projector version of the SENTRY transport package. The features shown in figure 2.4 were targeted in the penetration bar and 1.2 meter drop tests.

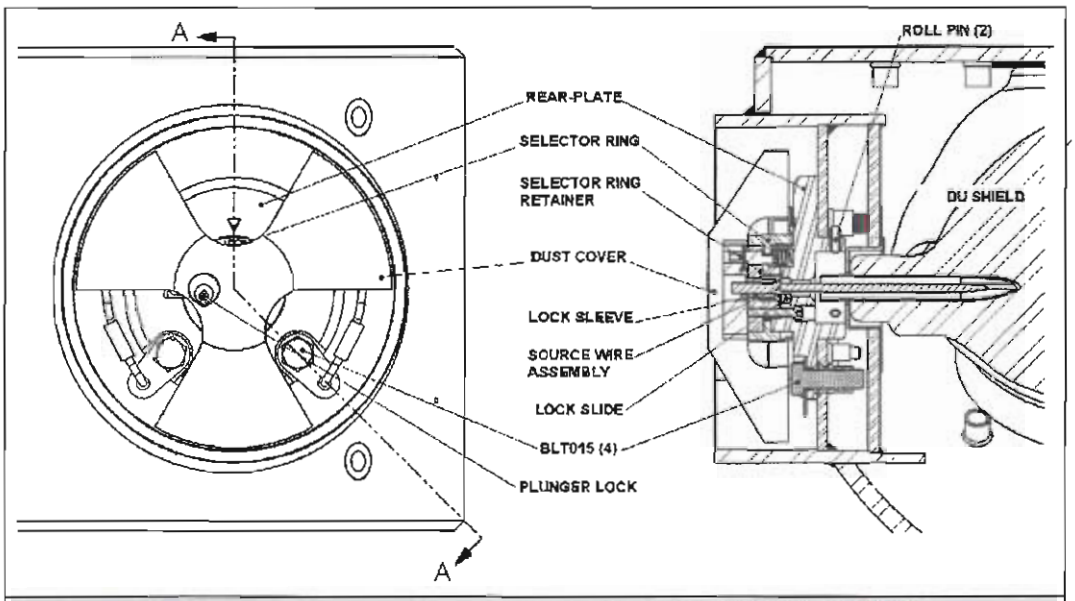

Figure 2.4. SENTRY Projector(s) Rear-plate Assembly with source wire secured

Section 3 Regulatory Compliance

The SENTRY projector/transport package complies with the normal transport package test requirements of 10 CFR 71.71 and IAEA TS-R-1 1996 based on the successful completion of the tests and analysis described in this report.

The pass criteria for a successful normal transport test or analysis is identified 10 CFR part 71.43 paragraph (f). This paragraph states:

> "There should be no loss or dispersal of radioactive contents, no significant increase in external surface radiation levels and no substantial reduction in the effectiveness of the packaging.
>
> IAEA TS-R-1 1996 paragraph 646 stipulates the same criteria except that it also requires that the loss of shielding integrity should not result in more than a 20% increase in the radiation level at any external surface of the package."

3.1 Free Drop Height Adjustment

The free drop test heights specified in 10 CFR Part 71 are adjusted higher to allow for SENTRY transport packages built heavier than the test specimen but less than the maximum package weight. The actual test specimens weigh less than the maximum weight specified on the top level assembly drawing.

Table 3.1 shows the adjusted free drop height based on the actual test specimen weight compared to the maximum transport package weight. The adjusted heights provide impact energy equal to or greater than the maximum transport package weight if dropped at the 10 CFR Part 71 specified drop height.

Table 3.1. Test Specimen 1.2 Meter Free Drop Height Adjustment

Test Specimen	Actual Test Specimen Weight (Lbs)	Maximum Transport Package Weight (Lbs)	1.2 Meter (4-foot) Adjusted Height	
			(Meters)	(Feet)
TP180A	655	780	1.5	4.9
TP180B	656	780	1.5	4.9
TP180C	652	780	1.5	4.9
TP180D	657	780	1.5	4.9
TP180E	659	780	1.5	4.9

Section 4 Test Results

4.1 Compression Test

4.1.1 Compression Test Requirement

The compression test subjects the transport package to a uniformly applied compressive load to the top and bottom of the package in the position in which the package would normally be transported for 24 hours. The compressive load must be equivalent to either 5 times the weight of the package or 2 pounds per square inch (PSI) times the vertically projected surface area of the package, whichever is greater.

The maximum package weight is 780 pounds per table 3.1. Five times the maximum package weight is equal to 3900 pounds. The total vertically projected surface area of the package is 255 square inches. This area times 2 PSI is equal to 510 pounds. Therefore, 3900 pounds is larger and will be used as the applied load for the test.

4.1.2 Compression Test Analysis

The SENTRY transport package is a vertically oriented, 18 inch diameter by 12 inch long, cylindrical tube capped at both ends. The tube and both end caps are 0.38 inch thick type 304 or 304L stainless steel. The minimum yield strength for type 304 or 304L stainless steel material is 30,000 PSI.

During transport, the compressive load would be uniformly applied onto the top end cap, compressing the tube in the longitudinal direction. The maximum compressive stress for the test is calculated by dividing the tube's cross sectional area, 20 square inches, into the applied load, 3900 pounds. The resulting compressive stress on the tube's cross section is 195 PSI.

A safety factor can be calculated by dividing the minimum yield strength of the tube material (30,000 PSI) by the maximum resulting compressive stress (195 PSI). The calculated factor of safety is 154. A factor of safety of 154 indicates the package is sufficiently strong enough to support the 3900 pound load for an indefinite period of time.

The slenderness ratio of a 12 inch long by 18 inch diameter hollow cylinder establishes the package as a short column. Therefore, for a short column, the strength limit of the tube material determines failure and bucking failure is not a concern.

4.1.3 Compression Test Assessment

The compression test was analyzed in accordance with Test plan 180, 10 CFR 71.71, and IAEA TS-R-1 1996. A preliminary evaluation of the specimen relative to the requirements of 10 CFR 71 and IAEA TS-R-1 1996 confirms the package meets the test requirement. The testing shall continue to the penetration test.

4.2 Penetration Test

4.2.1 Penetration Test Requirement

This test drops a vertically oriented, solid steel, cylindrical bar from a height of 1 m (40 in) onto the exposed surface of the package that is most vulnerable to puncture.

The bar has a diameter of 3.2 cm (1.25 in) with a hemispherical end and a mass of 6 kg (13 lbs). The long axis of the cylinder must be perpendicular to the package surface. The most vulnerable exposed surface of the package is the plunger lock of the rear plate dust cover. Therefore, the plunger lock is the target for the test.

4.2.2 Penetration Test Results

Since all SENTRY dust cover assemblies are essentially identical, only 1 penetration test is performed to determine compliance to this test requirement. Test specimen, serial number TP180A, was used for the test. Figure 4.4.1 shows the orientation of the test specimen, figure 4.4.2 shows the penetration bar contacting the brass plunger lock of the black trefoil dust cover, and figure 4.4.3 shows the damage caused by the dropped bar.

Figure 4.4.1 shows the orientation of test specimen for penetration test.

Figure 4.4.2 shows the penetration bar contacting the brass plunger lock.

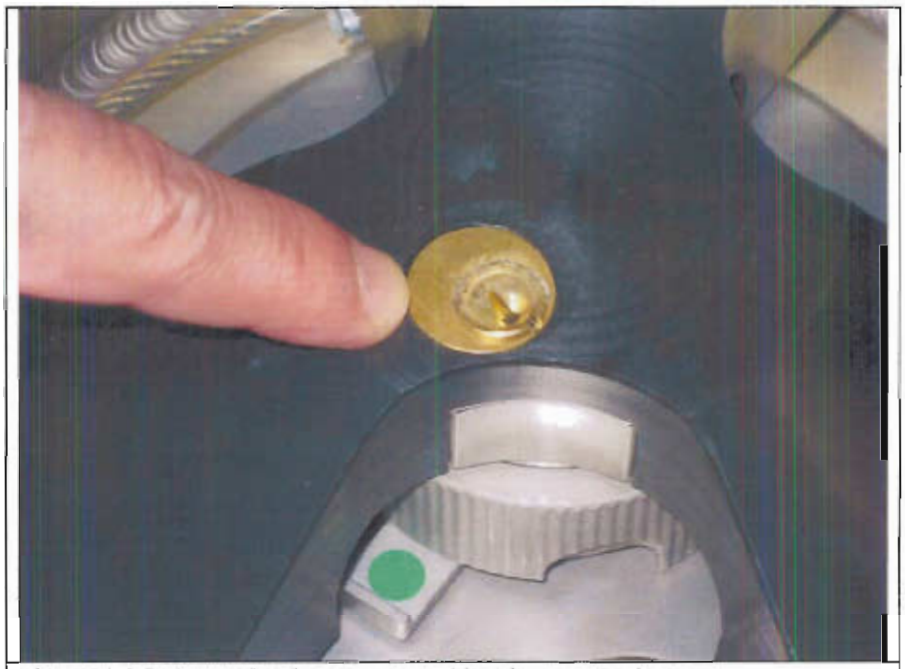

Figure 4.4.3 shows the damage caused by the penetration test.

4.2.3 Penetration Test Assessment

The penetration test was executed in accordance with Test plan 180, 10 CFR 71.71, and IAEA TS-R-1 1996. A preliminary evaluation of the specimen relative to the requirements of 10 CFR 71 and IAEA TS-R-1 1996 confirms the package meets the test requirement. The damage was not sufficient enough to prevent further testing. So, testing shall continue on to the 1.2 meter free drop test.

4.3 1.2 Meter Free Drop Test

4.3.1 1.2 Meter Free Drop Test Requirement

The 1.2 meter free drop test subjects the test specimen to a free drop of at least 1.2 meters (4 feet) onto a rigid, essentially unyielding surface. The orientation of the test specimen during the drop shall be the most unfavourable relative to the failure modes identified in test plan 180.

4.3.2 1.2 Meter Free Drop Test Orientation Review

Table 4.4.2 Free Drop Test Orientation Review

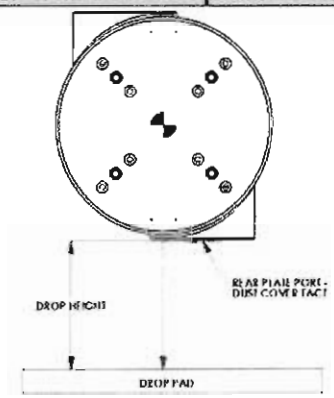 **Test Specimen: TP180A** Hit squarely on the rear plate port.	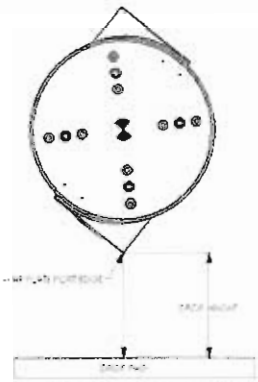 **Test Specimen: TP180B** Hit the edge of the rear plate port.
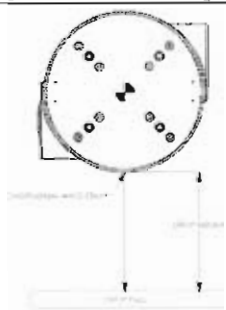 **Test Specimen: TP180C** Hit on the side of the shell directly on the seam weld.	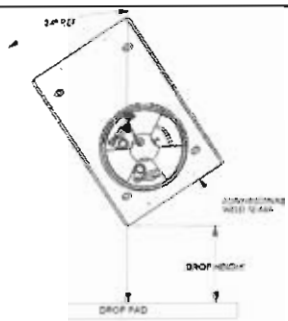 **Test Specimen: TP180D** Hit on the edge of the shell directly on the seam weld.
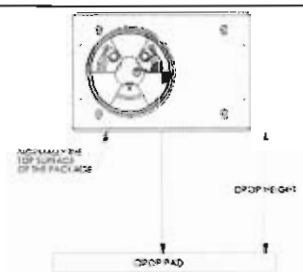 **Test Specimen: TP180E** Hit squarely on the top surface of the welded body.	

4.3.3 1.2 Meter Free Drop Test Results

4.3.3.1 1.2 Meter Free Drop Test – TP180A Results

Test Specimen TP180A Test Setup - 1.2 Meter Free Drop Test	
Changes to the planned drop orientation.	None
Test Specimen Weight	655 pounds
Actual Drop Height	4 feet and 9 inches (57 inches)
Temperature during test	51 F
Figure 4.4.3.1.A. Side View Orientation	Figure 4.4.3.1.B. End View Orientation

Test Specimen TP180A Damage Report - 1.2 Meter Free Drop Test	
The black plastic dust cover compressed slightly into port tube and the welded port tube was slightly bent in towards the dust cover. One of the dust cover attachment pins sheared. No damage was found on the rear plate attachment bolts. Could not unlock source wire for examination. The source location within the package did not change. Therefore, there is no expected change in the external radiation dose levels of the package.	
Pre-test source location dimension	6-5/8 inches
Post-test source location dimension	6-5/8 inches
Figure 4.4.3.1.C. Dust cover and port tube damage.	Figure 4.4.3.1.D. Close-up of the bent port tube.

4.3.3.2 1.2 Meter Free Drop Test – TP180B Results

Test Specimen TP180B Test Setup - 1.2 Meter Free Drop Test	
Changes to the planned drop orientation.	None
Test Specimen Weight	656 pounds
Actual Drop Height	4 feet and 9 inches (57 inches)
Temperature during test	51 F

Figure 4.4.3.2.A. Side View Orientation

Figure 4.4.3.2.B. End View Orientation

Test Specimen TP180B Damage Report - 1.2 Meter Free Drop Test	
The welded port tube bent in towards the dust cover by about 1 inch. No damage was found on the simulated source wire and/or rear plate attachment bolts. The source location within the package appears to have changed slightly. A post-test radiation profile inspection shows no change in the external radiation dose levels of the package.	
Pre-test source location dimension	6-5/8 inches
Post-test source location dimension	6-1/2 inches

Figure 4.4.3.2.C. Port tube damage.

Figure 4.4.3.2.D. Close-up of the bent port tube.

4.3.3.3 1.2 Meter Free Drop Test – TP180C Results

Test Specimen TP180C Test Setup - 1.2 Meter Free Drop Test	
Changes to the planned drop orientation.	None
Test Specimen Weight	652 pounds
Actual Drop Height	4 feet and 9 inches (57 inches)
Temperature during test	52 F

Figure 4.4.3.3.A. Side View Orientation

Figure 4.4.3.3.B. End View Orientation

Test Specimen TP180C Damage Report - 1.2 Meter Free Drop Test	
The longitudinal seam of the welded body shows minor deformation. No break in weld seam. No damage was found on the simulated source wire and/or rear plate attachment bolts. The source location within the package did not change. Therefore, there is no expected change in the external radiation dose levels of the package.	
Pre-test source location dimension	6-5/8 inches
Post-test source location dimension	6-5/8 inches

Figure 4.4.3.3.C. Dent to weld seam.

Figure 4.4.3.3.D. Close-up of the weld seam.

4.3.3.4 1.2 Meter Free Drop Test – TP180D Results

Test Specimen TP180D Test Setup - 1.2 Meter Free Drop Test	
Changes to the planned drop orientation.	None
Test Specimen Weight	657 pounds
Actual Drop Height	4 feet and 9 inches (57 inches)
Temperature during test	51 F
Figure 4.4.3.4.A. Side View Orientation	Figure 4.4.3.4.B. End View Orientation

Test Specimen TP180D Damage Report - 1.2 Meter Free Drop Test	
The end seam of the welded body shows slight deformation. No break in the weld seam. No damage was found on the simulated source wire and/or rear plate attachment bolts. The source location within the package did not change. Therefore, there is no expected change in the external radiation dose levels of the package.	
Pre-test source location dimension	6-5/8 inches
Post-test source location dimension	6-5/8 inches
Figure 4.4.3.4.C. Dent to weld seam.	Figure 4.4.3.4.D. Close-up of the weld seam.

4.3.3.5 1.2 Meter Free Drop Test – TP180E Results

Test Specimen TP180E Test Setup - 1.2 Meter Free Drop Test	
Changes to the planned drop orientation.	None
Test Specimen Weight	659 pounds
Actual Drop Height	4 feet and 9 inches (57 inches)
Temperature during test	51 F
Figure 4.4.3.5.A. Side View Orientation	Figure 4.4.3.5.B. End View Orientation

Test Specimen TP180E Damage Report - 1.2 Meter Free Drop Test	
The pins holding the lock cover sheared and allowed the black plastic dust cover to fall away from the rear plate assembly when the unit was moved. Examination of the rear plate Posilock after the test reveals a slight twisting of the #10-32 screws holding the selector ring retainer to the assembly. No other damage was found on the welded body, simulated source wire and/or rear plate attachment bolts. The source location within the package appears to have changed slightly. A post-test radiation profile inspection shows no change in the external radiation dose levels of the package.	
Pre-test source location dimension	6-5/8 inches
Post-test source location dimension	6-1/2 inches
Figure 4.4.3.5.C. Post drop view of impact surface (bottom). Note – the black plastic dust cover is intact at this point in the test.	Figure 4.4.3.5.D. The black plastic dust cover fell away from the rear plate assembly when unit was moved after the test. The roll pins holding the lock pins failed in shear.

4.3.4 1.2 Meter Free Drop Test Assessment

The 1.2 meter free drop test was performed in accordance with test plan 180, 10 CFR 71, IAEA TS-R-1 1996.

After the 1.2 meter free drop test, all test specimens continued to successfully meet the normal transport requirements of 10 CFR 71 and IAEA TS-R-1 1996. There was no loss or dispersal of radioactive contents, no significant increase in external surface radiation levels and no substantial reduction in the effectiveness of the packaging. There was no loss of shielding integrity resulting in more than a 20% increase in the radiation level at any external surface of the package.

Since the orientation of test specimen TP180E caused the roll pins of the lock cover to shear allowing the dust cover to fall away from the package and the #10-32 screws holding the selector ring retainer appeared to have a slight twist, these features will require a modification to increase the robustness of these items in order to successfully meet the hypothetical accident condition test requirements of 10 CFR 71, IAEA TS-R-1 1996. Once redesigned, only 1.2 meter free drop test in the orientation of test specimen TP180E needs to be repeated.

4.3.5 Testing the other SENTRY Configurations

Based on the assessments given for each SENTRY configuration below, the compression, penetration, and 1.2 meter free drop tests do not need to be performed for these other SENTRY configurations.

4.3.5.1 SENTRY 330 or 110 Projector - Standard Configuration

The compression, penetration, and 1.2 meter free drop tests do not need to be performed on this configuration because failure of the handling ribs would not affect the radiation safety of the package. Dose levels would not increase, the contents would not be released, and the overall effectiveness of the package would not be compromised.

4.3.5.2 SENTRY 330 or 110 Projector - Special Configuration

The compression, penetration, and 1.2 meter free drop tests do not need to be performed on this configuration because failure of the handling ribs without the plastic inserts would not affect the radiation safety of the package. Dose levels would not increase, the contents would not be released, and the overall effectiveness of the package would not be compromised.

4.3.5.3 SENTRY 330 or 110 Projector - Alternate Configuration

The compression, penetration, and 1.2 meter free drop tests do not need to be performed on this configuration because no test orientation affected the rear plate assembly enough to reduce the radiation safety of the package. Dose levels would not increase, the contents would not be released, and the overall effectiveness of the package would not be compromised.

4.3.5.4 SENTRY Source Changer - Standard Configuration

The compression, penetration, and 1.2 meter free drop tests do not need to be performed on this configuration because no test orientation affected the rear plate assembly enough to reduce the radiation safety of the package. Dose levels would not increase, the contents would not be released, and the overall effectiveness of the package would not be compromised.

Section 5 Post Test Assessment

Only 1 package needed to undergo radiation profile inspection because only it and one other test specimen showed the same slight variation in the source location dimension after testing. This test specimen successfully passed the radiation profile inspection. The minor damage to the welded body structure indicates there is no need for radiographs to be taken for further examination.

The test results indicate the SENTRY transport package complies with the normal transport test requirements of 10 CFR part 71 and IAEA TS-R-1 1996. There was no loss or dispersal of radioactive contents, no significant increase in external surface radiation levels and no substantial reduction in the effectiveness of the packaging. There was no loss of shielding integrity resulting in more than a 20% increase in the radiation level at any external surface of the package.

However, the 1.2 meter free drop revealed a weakness in the lock cover assembly and potentially the #10-32 screws of the rear plate Posilock mechanism. The lock cover and rear plate Posilock will need to be modified to enable the SENTRY transport package to pass the hypothetical accident condition tests.

Appendix

1. **Test Specimen Manufacturing Documentation**
   - See network file location: K:\2 Released Files (PDF)\Test Plans & Reports (TP)\TP180 SENTRY Transport Testing\Test Specimen Build\Route Cards & TMIs

2. **Measurement and Test Equipment Calibration Records**
   - See network file location: K:\2 Released Files (PDF)\Test Plans & Reports (TP)\TP180 SENTRY Transport Testing\Test Specimen Build\Equip Cal & Insp Records

3. **Test Worksheets (Equipment list, checklist and data sheets)**

Test Specimen & Equipment List

Test Specimen & Equipment Documentation

Test Specimen

Configuration	Drawing Number	Serial Number	Attach IIR	Attach NCR	Attach Route Cards
Basic	TP86015-330	TP180A	See TMI 189	NA	Yes
Basic	TP86015-330	TP180B	See TMI 189	NA	Yes
Basic	TP86015-330	TP180C	See TMI 189	NA	Yes
Basic	TP86015-330	TP180D	See TMI 189	NA	Yes
Basic	TP86015-330	TP180E	See TMI 189	NA	Yes

Tools & Equipment

Tool Description	Enter the Model and Serial Number Mark NA when not used.	Attach Inspection Report or Calibration Certificate
Drop Surface, Drawing No. T10740	S/N 001	Yes
Penetration Bar, Drawing No. T10129	S/N 01	Yes

Record any additional tools used to facilitate the test and attach the appropriate inspection report or calibration certificates.

TEMPERATURE GAGE	ENG-20	YES
WEIGHT SCALE	F16383	YES

Signature	Print Name	Date
Engineering: S. Grenier	S. GRENIER	13 OCT 2009
Regulatory: [illegible]	C. Pidal	13 Jan 10
Quality Assurance: C. Raughan	C Raughan	13 Jan 2010

Penetration Test Checklist

Test: PENETRATION TEST

Test Location: QSA
ENGINEERING TEST AREA – BURLINGTON MA

Step	Data	
1. Record test specimen serial number:	TP180A	
2. Record the test specimen weight:	655 LBS.	
3. Record the ambient temperature (°C): 18.9°C	66.1°F	Instrument S/N: ENG-20
4. Identify target location on test specimen.	PLUNGER LOCK ON DUST COVER	
5. Photograph set-up with penetration bar touching target location on test specimen.	DONE	
6. Lift penetration bar 40 inches from target location on test specimen to lowest point on penetration bar.	DONE	
7. Release the penetration bar.	DONE	
8. Photograph target location after impact.	DONE	
9. Record the damage to the test specimen. Use a separate sheet and attach, if needed. SMALL DENT ON PLASTIC DUST COVER AND BRASS PLUNGER LOCK		
10. Engineering, Regulatory Affairs and Quality Assurance make a preliminary assessment relative to 10 CFR 71. Record the assessment on a separate sheet and attach.		

Test witnessed by (Signature)	Print Name	Date
Engineering: S Grenier	S. GRENIER	9 OCT 2009
Regulatory Affairs: [illegible]	L. Poirier	13 Jan 10
Quality Assurance: C Raghan	C Raghan	13 Jan 2010

Penetration Test Data Sheet

Test Unit Model/Serial No.: TP180 A	Test: PENETRATION TEST
Test Date: 9 OCT 2009	Test Time: 3:15 PM

Describe the test orientation:

PROJECTOR/PACKAGE ON SIDE WITH REAR PLATE FACING UP.

Describe on-site inspection (damage, broken parts, etc.):

* IMPACT DENT ON PLUNGER LOCK FACE AND ON BLACK TREFOIL PLASTIC DUST COVER.
* COULD NOT INSERT KEY INTO LOCK AFTER TEST.
* NO LOSS OF CONTENTS.

WITNESSED BY MIKE FULLER (REGULATORY)

On-site test assessment:

- Was the test performed in accordance with 10 CFR 71, IAEA TS-R-1 1996, and this test plan? Yes or No.
- Does the test specimen meet the requirements of 10 CFR 71 and IAEA TS-R-1 1996 for this test? Yes or No.
- Should testing continue with this test specimen? Yes or No. If yes, next test: _____

Engineering: S. Gr 9 OCT 09 Regulatory: 13 Oct 09 QA: C. 13 Oct 2009

Completed by: STEVE GRENIER	Date: 9 OCT 2009

Test Inspection Data Sheet

Test Specimen Serial No.: TP180A	Last Test Performed: PENETRATION TEST

Describe and measure (if appropriate) any damage or broken parts, etc.:

PLUNGER LOCK FACE AND PLASTIC TREFOIL DUST COVER SHOWS DENT AT POINT OF IMPACT.

Describe and measure (if appropriate) any signs of permanent strain or deformation:

DENT ON DUST COVER AND LOCK

Describe the condition of the simulated source wire assembly.

COULD NOT UNLOCK PLUNGER LOCK TO EXAMINE SOURCE WIRE BUT ASSUME NO AFFECT ON SOURCE WIRE.

Reassemble the package using a representative active source, making sure that the source position and the package configuration is the same as they were immediately after the last test.

Measure and record a radiation profile of each test specimen in accordance with QSA Global Work Instruction WI-Q-1806.

Compare the pre-test dose levels with post-test dose levels at the surface of the package and at 1 meter from the surface of the package.

THIS WILL BE PERFORMED AFTER 4 FOOT DROP OR 40-INCH PUNCTURE TEST.

Is a radiograph required to inspect for hidden component damage or failure? If radiography is performed, describe any damage or failures found.

NO RADIOGRAPH IS NECESSARY

Completed by: S. GREENTEN	Date: 9 OCT 2009

Free Drop & Puncture Test Checklist

Test: 4-FOOT DROP TEST		
Test Location: QSA GLOBAL BURLINGTON MA		
Step	**Data**	
1. Record test specimen serial number:	TP180A	
2. Record the test specimen weight:	655 LBS.	
3. Record the ambient temperature (°C):	51°F	Instrument S/N: ENG-20
4. Identify set-up orientation figure:	#1	
5. Record drop height.	4.8 FEET (57 INCHES)	
6. Photograph set-up in at least two perpendicular planes.	✓	
7. Begin video recording of the test so that impact is recorded.	✓	
8. Release the test specimen.	✓	
9. Stop the video recorder. Ensure the point of impact and orientation specified in the plan has been achieved.	✓	
10. Record the damage to the test specimen. Use a separate sheet and attach, if needed.	✓	
11. Engineering, Regulatory Affairs and Quality Assurance make a preliminary assessment relative to 10 CFR 71. Record the assessment on a separate sheet and attach.		
Test witnessed by (Signature)	**Print Name**	**Date**
Engineering: S. Grenier	S. GRENIER	13 OCT 2009
Regulatory Affairs: [illegible]	C. Pilla	13 Jan 10
Quality Assurance: C. Rayfon	C. Rayfon	13 Jan 10

Free Drop & Puncture Test Data Sheet

Test Unit Model/Serial No.: TP180A	Test: 4-FOOT DROP TEST
Test Date: 13 OCT 2009	Test Time: 3:00 PM

Describe drop orientation and drop height:

ORIENTATION #1 PER PLAN AT 57 INCHES

Describe impact (location, rotation, etc.):

IMPACT LOCATION ON REAR PORT TUBE FACE.
SPECIMEN ROTATED 180° AFTER IMPACT.

Describe on-site inspection (damage, broken parts, etc.):

BOTTOM PORTION OF TUBE BENT INWARD ABOUT 1/16 INCH.
BRASS PLUNGER LOCK COMPRESSED INTO PLASTIC DUST COVER.
ONE BROKEN PIN ON DUST COVER – NEEDED TO KEEP COVER ON.

On-site test assessment:

- Was the test performed in accordance with 10 CFR 71, IAEA TS-R-1 1996, and this test plan? Yes or No.
- Does the test specimen meet the requirements of 10 CFR 71 and IAEA TS-R-1 1996 for this test? Yes or No.
- Any changes to subsequent drop orientations needed to achieve maximum damage? Especially for the SENTRY 330 Standard, SENTRY 330 Special, and SENTRY Source Changer configurations. Yes or No. If yes, then identify and justify.
- Did sufficient damage occur at or on the rear-plate attachment area to warrant further drop testing the SENTRY 110 Projector – Basic configuration because of its thinner rear-plate? Yes or No.
- Should testing continue with this test specimen? Yes or No* If yes, next test: _____
- Will the test specimen pass the thermal test based on the accumulated damage assessment? ~~Yes or No~~ NA.

Engineering SD 13 OCT 09 Regulatory: 13 OCT 09 QA: C. 14 Oct 09

Describe any post-test disassembly and inspection:

* REAR PLATE AND DUST COVER ASSEMBLIES REMOVED AND TAKEN APART. REAR PLATE PARTS INTACT AND FUNCTIONAL.
DUST COVER PIN BROKEN INDICATES POSSIBLE FAILURE FOR 30-FOOT DROP.

Describe any change in source position (if possible):

NO CHANGE IN SOURCE POSITION

Describe results of radiography (if performed):

NOT PERFORMED

Completed by: S. Glenn	Date: 13 OCT 2009

Test Inspection Data Sheet

Test Specimen Serial No.: TP180A	Last Test Performed: 4-FOOT DROP

Describe and measure (if appropriate) any damage or broken parts, etc.:

ONE BROKEN PIN ON DUST COVER ASSEMBLY.

* BOTTOM END OF REAR PLATE PORT TUBE BENT IN ABOUT $\frac{1}{16}$ IN.

Describe and measure (if appropriate) any signs of permanent strain or deformation:

* SEE ABOVE.

Describe the condition of the simulated source wire assembly.

NO AFFECT ON SIMULATED SOURCE ASSEMBLY CONDITION OR LOCATION.

Reassemble the package using a representative active source, making sure that the source position and the package configuration is the same as they were immediately after the last test.

Measure and record a radiation profile of each test specimen in accordance with QSA Global Work Instruction WI-Q-1806.

Compare the pre-test dose levels with post-test dose levels at the surface of the package and at 1 meter from the surface of the package.

THIS WILL BE DONE AT A LATER DATE OR AFTER PUNCTURE TEST.

Is a radiograph required to inspect for hidden component damage or failure? If radiography is performed, describe any damage or failures found.

NOT REQUIRED.

Completed by: S. Gremier	Date: 13 OCT 2009

Free Drop & Puncture Test Checklist

Test: 4-FOOT DROP TEST		
Test Location: QSA-GLOBAL BURLINGTON MA		
Step	**Data**	
1. Record test specimen serial number:	TP180B	
2. Record the test specimen weight:	656 LBS.	
3. Record the ambient temperature (°C):	51°F	Instrument S/N: EG6-20
4. Identify set-up orientation figure:	#2	
5. Record drop height.	4.8 FEET (57 INCHES)	
6. Photograph set-up in at least two perpendicular planes.	✓	
7. Begin video recording of the test so that impact is recorded.	✓	
8. Release the test specimen.	✓	
9. Stop the video recorder. Ensure the point of impact and orientation specified in the plan has been achieved.	✓	
10. Record the damage to the test specimen. Use a separate sheet and attach, if needed.	✓	
11. Engineering, Regulatory Affairs and Quality Assurance make a preliminary assessment relative to 10 CFR 71. Record the assessment on a separate sheet and attach.		
Test witnessed by (Signature)	**Print Name**	**Date**
Engineering: S. Grenier	S. GRENIER	13 OCT 2009
Regulatory Affairs: L. Pickle	L. Pickle	13 Jan 10
Quality Assurance: C. Rayman	C. Rayman	13 Jan 10

Free Drop & Puncture Test Data Sheet

Test Unit Model/Serial No.: TP180B	Test: 4-FOOT DROP TEST
Test Date: 13 OCT 2009	Test Time: 3:15 PM

Describe drop orientation and drop height:

DROP ORIENTATION #2 PER PLAN AT 57 INCHES.

Describe impact (location, rotation, etc.):

IMPACT LOCATION ON PROTRUDING REAR PLATE PORT TUBE EDGE.

SPECIMEN ROTATED 90° AFTER IMPACT.

Describe on-site inspection (damage, broken parts, etc.):

NO OBVIOUS BROKEN PARTS.

REAR PLATE PORT TUBE CRUSHED IN TOWARD DUST COVER.

On-site test assessment:

- Was the test performed in accordance with 10 CFR 71, IAEA TS-R-1 1996, and this test plan? Yes or No.
- Does the test specimen meet the requirements of 10 CFR 71 and IAEA TS-R-1 1996 for this test? Yes or No.
- Any changes to subsequent drop orientations needed to achieve maximum damage? Especially for the SENTRY 330 Standard, SENTRY 330 Special, and SENTRY Source Changer configurations. Yes or No. If yes, then identify and justify.
- Did sufficient damage occur at or on the rear-plate attachment area to warrant further drop testing the SENTRY 110 Projector – Basic configuration because of its thinner rear-plate? Yes or No
- Should testing continue with this test specimen? Yes or No. If yes, next test: 30-FOOT DROP
- Will the test specimen pass the thermal test based on the accumulated damage assessment? ~~Yes or No~~ NA.

Engineering: S. Gremin 13 OCT 09 **Regulatory:** 13 Jan 10 **QA:** C. [illegible] 14 Jan 2010

Describe any post-test disassembly and inspection:

NO DISASSEMBLY PERFORMED.

Describe any change in source position (if possible):

SB 13 OCT 2009 ~~NO~~ SLIGHT CHANGE IN SOURCE POSITION ABOUT 1/8 INCH TOWARDS FRONT END.

Describe results of radiography (if performed):

NOT PERFORMED.

Completed by: S. GREMIN	Date: 13 OCT 2009

Test Inspection Data Sheet

Test Specimen Serial No.: TP180B	Last Test Performed: 4-FOOT DROP TEST

Describe and measure (if appropriate) any damage or broken parts, etc.:

LIP OF THE WELDED PORT TUBE BENT IN TOWARDS THE DUST COVER BY ABOUT 1 INCH, CAN NOT REMOVE DUST COVER WITHOUT REMOVING DENT OR CUTTING COVER.

Describe and measure (if appropriate) any signs of permanent strain or deformation:

SEE ABOVE.

Describe the condition of the simulated source wire assembly.

UNABLE TO REMOVE DUST COVER TO ACCESS SOURCE WIRE, EXPECT NO DAMAGE TO SOURCE WIRE. SLIGHT CHANGE IN LOCATION.

Reassemble the package using a representative active source, making sure that the source position and the package configuration is the same as they were immediately after the last test.

Measure and record a radiation profile of each test specimen in accordance with QSA Global Work Instruction WI-Q-1806.

Compare the pre-test dose levels with post-test dose levels at the surface of the package and at 1 meter from the surface of the package.

THIS WILL BE DONE AT A LATER DATE OR AFTER PUNCTURE TEST.

Is a radiograph required to inspect for hidden component damage or failure? If radiography is performed, describe any damage or failures found.

NOT REQUIRED.

Completed by: S. Granger	Date: 13 OCT 2009

Free Drop & Puncture Test Checklist

Test: 4-FOOT DROP TEST		
Test Location: QSA-GLOBAL BURLINGTON MA		
Step	**Data**	
1. Record test specimen serial number:	TP180C	
2. Record the test specimen weight:	652 LBS.	
3. Record the ambient temperature (°C):	52°F	Instrument S/N: ENG-20
4. Identify set-up orientation figure:	#3	
5. Record drop height.	4.8 FEET (57 INCHES)	
6. Photograph set-up in at least two perpendicular planes.	✓	
7. Begin video recording of the test so that impact is recorded.	✓	
8. Release the test specimen.	✓	
9. Stop the video recorder. Ensure the point of impact and orientation specified in the plan has been achieved.	✓	
10. Record the damage to the test specimen. Use a separate sheet and attach, if needed.	✓	
11. Engineering, Regulatory Affairs and Quality Assurance make a preliminary assessment relative to 10 CFR 71. Record the assessment on a separate sheet and attach.		
Test witnessed by (Signature)	**Print Name**	**Date**
Engineering: S. Greenier	S. GREENIER	13 OCT 2009
Regulatory Affairs: L. Pidal	L. Pidal	13 Jan 10
Quality Assurance: C. Rayfman	C Rayfman	13 Jan 10

Free Drop & Puncture Test Data Sheet

Test Unit Model/Serial No.: TP180C	Test: 4-FOOT DROP TEST
Test Date: 13 OCT 2009	Test Time: 3:26 PM

Describe drop orientation and drop height:

DROP ORIENTATION #3 PER PLAN AT 57 INCHES.

Describe impact (location, rotation, etc.):

IMPACT LOCATION ON BODY WELD SEAM (LONGITUDINAL).
SPECIMEN ROTATED 90° ONTO ITS TOP AFTER IMPACT.

Describe on-site inspection (damage, broken parts, etc.):

MINOR DENT OF BODY AT THE WELD SEAM LOCATION.

On-site test assessment:

- Was the test performed in accordance with 10 CFR 71, IAEA TS-R-1 1996, and this test plan? Yes or No.
- Does the test specimen meet the requirements of 10 CFR 71 and IAEA TS-R-1 1996 for this test? Yes or No.
- Any changes to subsequent drop orientations needed to achieve maximum damage? Especially for the SENTRY 330 Standard, SENTRY 330 Special, and SENTRY Source Changer configurations. Yes or No If yes, then identify and justify.
- Did sufficient damage occur at or on the rear-plate attachment area to warrant further drop testing the SENTRY 110 Projector – Basic configuration because of its thinner rear-plate? Yes or No
- Should testing continue with this test specimen? Yes or No. If yes, next test: 30-FOOT DROP
- Will the test specimen pass the thermal test based on the accumulated damage assessment? ~~Yes or No~~ NA

Engineering: S Gramm 13 OCT 09 **Regulatory:** 13 Jan 10 **QA:** C. Langlois 14 Jan 2010

Describe any post-test disassembly and inspection:

NO DISASSEMBLY PERFORMED.

Describe any change in source position (if possible):

NO CHANGE IN SOURCE POSITION.

Describe results of radiography (if performed):

NOT PERFORMED.

Completed by: S. Gramm	Date: 13 OCT 2009

Test Inspection Data Sheet

Test Specimen Serial No.: TP180C	Last Test Performed: 4-FOOT DROP TEST

Describe and measure (if appropriate) any damage or broken parts, etc.:

DENT AT ONE END OF TUBE WELD SEAM NEAR END PLATE. DENT IS ABOUT 2 INCHES LONG.

Describe and measure (if appropriate) any signs of permanent strain or deformation:

SEE ABOVE.

Describe the condition of the simulated source wire assembly.

NO AFFECT ON SIMULATED SOURCE ASSEMBLY CONDITION OR LOCATION.

Reassemble the package using a representative active source, making sure that the source position and the package configuration is the same as they were immediately after the last test.

Measure and record a radiation profile of each test specimen in accordance with QSA Global Work Instruction WI-Q-1806.

Compare the pre-test dose levels with post-test dose levels at the surface of the package and at 1 meter from the surface of the package.

THIS WILL BE DONE AT A LATER DATE OR AFTER THE PUNCTURE TEST.

Is a radiograph required to inspect for hidden component damage or failure? If radiography is performed, describe any damage or failures found.

NOT REQUIRED

Completed by: S. Gram	Date: 13 OCT 2009

Free Drop & Puncture Test Checklist

Test: 4 - FOOT DROP	
Test Location: QSA - GLOBAL, BURLINGTON, MA	

Step	Data	
1. Record test specimen serial number:	TP180 D	
2. Record the test specimen weight:	657 LBS.	
3. Record the ambient temperature (°C):	51°F	Instrument S/N: ENG-20
4. Identify set-up orientation figure:	#4	
5. Record drop height.	4.7 FEET (57 INCHES)	
6. Photograph set-up in at least two perpendicular planes.	✓	
7. Begin video recording of the test so that impact is recorded.	✓	
8. Release the test specimen.	✓	
9. Stop the video recorder. Ensure the point of impact and orientation specified in the plan has been achieved.	✓	
10. Record the damage to the test specimen. Use a separate sheet and attach, if needed.	✓	
11. Engineering, Regulatory Affairs and Quality Assurance make a preliminary assessment relative to 10 CFR 71. Record the assessment on a separate sheet and attach.		

Test witnessed by (Signature)	Print Name	Date
Engineering: S. Gennini	S. GRENIGER	13 OCT 2009
Regulatory Affairs: L. Pelchat	L. Pelchat	13 Jan 10
Quality Assurance: C. Roughton	C. Roughton	13 Jan 10

Free Drop & Puncture Test Data Sheet

Test Unit Model/Serial No.: TP180D	Test: 4-FOOT DROP TEST
Test Date: 13 OCT 2009	Test Time: 3:36 PM

Describe drop orientation and drop height:

DROP ORIENTATION #4 PER PLAN AT 57 INCHES.

Describe impact (location, rotation, etc.):

IMPACT LOCATION ON CYLINDER EDGE OF BODY.
SPECIMEN ROTATED ONTO ITS SIDE (WELD SEAM) AFTER IMPACT.

Describe on-site inspection (damage, broken parts, etc.):

MINOR DENT AT IMPACT LOCATION.

On-site test assessment:

- Was the test performed in accordance with 10 CFR 71, IAEA TS-R-1 1996, and this test plan? **Yes or No.**
- Does the test specimen meet the requirements of 10 CFR 71 and IAEA TS-R-1 1996 for this test? **Yes or No.**
- Any changes to subsequent drop orientations needed to achieve maximum damage? Especially for the SENTRY 330 Standard, SENTRY 330 Special, and SENTRY Source Changer configurations. **Yes or No.** If yes, then identify and justify.
- Did sufficient damage occur at or on the rear-plate attachment area to warrant further drop testing the SENTRY 110 Projector – Basic configuration because of its thinner rear-plate? **Yes or No**
- Should testing continue with this test specimen? **Yes or No.** If yes, next test: 30-FOOT DROP
- Will the test specimen pass the thermal test based on the accumulated damage assessment? ~~Yes or No~~ N/A

Engineering: S. Gum 13 OCT 09 **Regulatory:** [illegible] 13 Oct 10 **QA:** C. Hayden 14 Oct 2010

Describe any post-test disassembly and inspection:

NO DISASSEMBLY PERFORMED.

Describe any change in source position (if possible):

NO CHANGE IN SOURCE LOCATION.

Describe results of radiography (if performed):

NOT PERFORMED.

Completed by: S. Gum	Date: 13 OCT 2009

Test Inspection Data Sheet

Test Specimen Serial No.: TP180D	Last Test Performed: 4-FOOT DROP TEST

Describe and measure (if appropriate) any damage or broken parts, etc.:

WELDED EDGE OF CYLINDER BODY DENTED SLIGHTLY ABOUT 1/4 INCH IN AND ABOUT 3 INCHES LONG.

Describe and measure (if appropriate) any signs of permanent strain or deformation:

SEE ABOVE.

Describe the condition of the simulated source wire assembly.

NO AFFECT ON SIMULATED SOURCE ASSEMBLY CONDITION.
NO CHANGE IN SOURCE POSITION.

Reassemble the package using a representative active source, making sure that the source position and the package configuration is the same as they were immediately after the last test.

Measure and record a radiation profile of each test specimen in accordance with QSA Global Work Instruction WI-Q-1806.

Compare the pre-test dose levels with post-test dose levels at the surface of the package and at 1 meter from the surface of the package.

THIS WILL BE DONE AT A LATER DATE OR AFTER THE PUNCTURE TEST.

Is a radiograph required to inspect for hidden component damage or failure? If radiography is performed, describe any damage or failures found.

NOT REQUIRED.

Completed by: S. Gamin	Date: 13 OCT 2009

Free Drop & Puncture Test Checklist

Test: 4-FOOT DROP TEST		
Test Location: QSA-GLOBAL BURLINGTON MA		
Step	**Data**	
1. Record test specimen serial number:	TP180E	
2. Record the test specimen weight:	659 LBS.	
3. Record the ambient temperature (°C):	51°F	Instrument S/N: ENG-20
4. Identify set-up orientation figure:	#5	
5. Record drop height.	4.7 FEET (57 INCHES)	
6. Photograph set-up in at least two perpendicular planes.	✓	
7. Begin video recording of the test so that impact is recorded.	✓	
8. Release the test specimen.	✓	
9. Stop the video recorder. Ensure the point of impact and orientation specified in the plan has been achieved.	✓	
10. Record the damage to the test specimen. Use a separate sheet and attach, if needed.	✓	
11. Engineering, Regulatory Affairs and Quality Assurance make a preliminary assessment relative to 10 CFR 71. Record the assessment on a separate sheet and attach.		
Test witnessed by (Signature)	**Print Name**	**Date**
Engineering: S. Grenier	S. GRENIER	13 OCT 2009
Regulatory Affairs: [illegible]	[illegible]	13 Jan 10
Quality Assurance: C. Roughan	C. Roughan	13 Jan 10

Free Drop & Puncture Test Data Sheet

Test Unit Model/Serial No.: TP180 E	Test: 4-FOOT DROP TEST
Test Date: 13 OCT 2009	Test Time: 3:46 PM

Describe drop orientation and drop height:

ORIENTATION #5 PER PLAN AT 57 INCHES.

Describe impact (location, rotation, etc.):

IMPACT LOCATION ON TOP SURFACE. SPECIMEN BOUNCED ABOUT 2 INCHES VERTICALLY AND LANDED BACK ON TOP SURFACE.

Describe on-site inspection (damage, broken parts, etc.):

- TWO BROKEN PINS ON LOCK COVER (DUST COVER).
- DIFFICULTY ACTUATION POSILOCK

On-site test assessment:

- Was the test performed in accordance with 10 CFR 71, IAEA TS-R-1 1996, and this test plan? **Yes or No.**
- Does the test specimen meet the requirements of 10 CFR 71 and IAEA TS-R-1 1996 for this test? **Yes or No.**
- Any changes to subsequent drop orientations needed to achieve maximum damage? Especially for the SENTRY 330 Standard, SENTRY 330 Special, and SENTRY Source Changer configurations. **Yes or No** If yes, then identify and justify.
- Did sufficient damage occur at or on the rear-plate attachment area to warrant further drop testing the SENTRY 110 Projector – Basic configuration because of its thinner rear-plate? **Yes or No**
- Should testing continue with this test specimen? **Yes or No** If yes, next test: _____
- Will the test specimen pass the thermal test based on the accumulated damage assessment? ~~**Yes or No**~~ N/A

Engineering: S. Gr 13 OCT 09 **Regulatory:** 13 Oct 09 **QA:** C. [illegible] 14 Jan 2010

Describe any post-test disassembly and inspection:

REAR PLATE AND DUST COVER REMOVED AND TAKEN APART. THE FOUR SCREWS HOLDING THE SELECTOR RING RETAINER APPEAR TWISTED SLIGHTLY CAUSING THE ANTI-ROTATION LUGS TO BIND.

Describe any change in source position (if possible):

SLIGHT CHANGE IN SOURCE LOCATION – ABOUT 1/8 INCH TOWARDS FRONT.

Describe results of radiography (if performed):

NOT PERFORMED.

Completed by: S. Gr	Date: 13 OCT 2009

Test Inspection Data Sheet

Test Specimen Serial No.: TP180 E	Last Test Performed: 4-FOOT DROP TEST

Describe and measure (if appropriate) any damage or broken parts, etc.:

TWO BROKEN PINS ON LOCK COVER ASSEMBLY. BROKEN PINS ALLOW THE DUST COVER (WITH LOCK COVER) TO FALL AWAY FROM REAR PLATE.

Describe and measure (if appropriate) any signs of permanent strain or deformation:

SEE ABOVE

Describe the condition of the simulated source wire assembly.

NO DAMAGE TO SIMULATED SOURCE WIRE.
POST TEST MEASUREMENT INDICATES SLIGHT MOVEMENT (1/8 INCH) TOWARDS FRONT END.

Reassemble the package using a representative active source, making sure that the source position and the package configuration is the same as they were immediately after the last test.

Measure and record a radiation profile of each test specimen in accordance with QSA Global Work Instruction WI-Q-1806.

Compare the pre-test dose levels with post-test dose levels at the surface of the package and at 1 meter from the surface of the package.

THIS WILL BE DONE AT A LATER DATE.

Is a radiograph required to inspect for hidden component damage or failure? If radiography is performed, describe any damage or failures found.

NOT REQUIRED.

Completed by: S. Gram	Date: 13 OCT 2009

SENTRY Test Plan 180 Source Location Data Sheet				
Test Specimen	Initial (Pre-Test) Dimension (inch)	Post 4-foot Drop Test Dimension (inch)	Post 30-foot Drop Test Dimension (inch)	Post Puncture Drop Test Dimension (inch)
TP180A	6 5/8"	6 5/8"		
TP180B	6 5/8"	6 1/2"		
TP180C	6 5/8"	6 5/8"		
TP180D	6 5/8"	6 5/8"		
TP180E	6 5/8"	6 1/2"		
TP180F	—	—		
TP180G	—	—		
TP180H	6 5/8"	—		
TP180J	—	—		
	JU 13OCT2009	JU 14OCT09		

SOURCE
LOCATION
MEASUREMENT

QSA GLOBAL

SHIELDING PROFILE AND INSPECTION FORM (SPIF) F-Q-1806-2

Sheet 1 of 1

Shield Data			
Model: 86010-330	Serial # TP180A	Radionuclide: Co-60	Max. Capacity 330 Ci
Shield P/N: 86001-330	Shield Heat # C586-A06		Lot # 0914100302

Profile Process Data			
Source Model: 424-13	Source Ser. # B351278	Radionuclide: Co-60	Activity: 324-1 Ci
Survey Inst. E600	Serial # 1863	Date Cal. 2/24/08	Date Due: 2/24/10
Inst. Probe: SHP270	Serial # 00542	Capacity Correction Factor: 1.02	

	Measured Dose Rate mR/hr				Adjusted Dose Rate mR/hr		
Location	At Surface	Surface Corr. Factor	At 30 Cm [Note 2]	At one Meter	At Surface	At 30 Cm [Note 2]	At one Meter [Note 1]
Top	15	1.09	NA	.5	17	NA	.5
Right	55	1.06		1.1	60		1.1
Front	35	1.06		1.0	38		1.0
Left	45	1.06		1.2	49		1.2
Rear	30	1.06		1.3	32		1.3
Bottom	25	1.09		1.0	28		1.0
				Acceptance Criteria:	≤ 200	NA	≤ 50
				Result: (Check one) Accept	✓	Reject	

Inspector: [signature] Date: 5/22/09 NCR # _____

Comments:

Tests overload.

Notes:

1. Refer to F-Q-1806-1, Shield Efficiency Testing Surface Correction Factors for an existing device model, or F-Q-1806-3, Shield Profile Worksheet for One meter acceptance limit.
2. The 30cm readings are only required when specifically requested.
3. Additional sheets may be used to describe results or indicate reading locations using sketches. Number all sheets and indicate total number of sheets. Make sure shield Identification is included on each sheet.
4. Consult instrument calibration records for instrument uncertainty.

QSA GLOBAL

SHIELDING PROFILE AND INSPECTION FORM (SPIF) F-Q-1806-2

Sheet 1 of 1

Shield Data

Model: Sentry 330	Serial # TP180B	Radionuclide: Co-60	Max. Capacity 330 Ci
Shield P/N: 86001-330	Shield Heat # C613-A06		Lot # 0920501008

Profile Process Data

Source Model: 424-13	Source Ser. # 27747B	Radionuclide: Co-60	Activity: 312.1 Ci
Survey Inst. E600	Serial # 1863	Date Cal. 2/24/09	Date Due: 2/24/10
Inst. Probe: HP.270	Serial # 00542	Capacity Correction Factor: 1.06	

Location	Measured Dose Rate mR/hr: At Surface	Surface Corr. Factor	At 30 Cm [Note 2]	At one Meter	Adjusted Dose Rate mR/hr: At Surface	At 30 Cm [Note 2]	At one Meter [Note 1]
Top	19	1.09	NA	.4	22	NA	.4
Right	50	1.06		.9	56		1.0
Front	25	1.06		.8	28		.9
Left	40	1.06		.9	45		1.0
Rear	50	1.06		1.2	56		1.3
Bottom	25	1.09		.4	29		.4
Acceptance Criteria:					≤ 200	NA	~~≤ 4.0~~ 5.0
Result: (Check one)				Accept	✓	Reject	≤ 4.0

3/27/09

Inspector: [signature] Date: 8/8/09 NCR # _____

Comments: Meter Reading are less background of .2 mR/hr

Notes:
1. Refer to F-Q-1806-1, Shield Efficiency Testing Surface Correction Factors for an existing device model, or F-Q-1806-3, Shield Profile Worksheet forOne meter acceptance limit
2. The 30cm readings are only required when specifically requested.
3. Additional sheets may be used to describe results or indicate reading locations using sketches. Number all sheets and indicate total number of sheets. Make sure shield Identification is included on each sheet.
4. Consult instrument calibrationrecords for instrument uncertainty.

QSA GLOBAL

SHIELDING PROFILE AND INSPECTION FORM (SPIF)
F-Q-1806-2

Sheet 1 of 1

Shield Data			
Model: Sentry 330	Serial # T180B	Radionuclide: Co 60	Max. Capacity 330 Ci
Shield P/N: 86001-330	Shield Heat # C613-A06	Lot # 0920301008	

Profile Process Data			
Source Model: 424-13	Source Ser. # 27746B	Radionuclide: Co 60	Activity: 195.6 Ci
Survey Inst. 1 E600	Serial # 1863	Date Cal. 2/24/10	Date Due: 2/24/11
Survey Inst. 2 NA	Serial # NA	Date Cal. NA	Date Due: NA
Inst. Probe: 1 HB 270	Serial # 00542	Inst. Probe: 2 NA	Serial # NA
Capacity Correction Factor: 1.69			

	Measured Dose Rate mR/hr				Adjusted Dose Rate mR/hr		
Location	At Surface	Surface Corr. Factor	At 30 Cm [Note 2]	At One Meter	At Surface	At 30 Cm [Note 2]	At One Meter [Note 1]
Top	14	1.09	NA	.32	26	NA	.54
Right	18	1.06	↓	.50	32	↓	.85
Front	34	1.06	↓	.62	61	↓	1.1
Left	33	1.06	↓	.63	59	↓	~~.60~~ 1.1
Rear	13	1.06	↓	.51	23	↓	.90
Bottom	19	1.09	↓	.20	35	↓	.34
				Acceptance Criteria:	< 200	NA	≤ 5.0
				Result: (Check one) Accept	✓	Reject	

Inspector: [signature] Date: 3/29/10 NCR # _____

Comments: All but bottom 1 meter Readings are less background .06
Bottom 1 meter Reading is less background .3

Notes:
1. Refer to F-Q-1806-1, Shield Efficiency Testing Surface Correction Factors for an existing device model, or F-Q-1806-3, Shield Profile Worksheet forOne meter acceptance limit.
2. The 30cm readings are only required when specifically requested.
3. Additional sheets may be used to describe results or indicate reading locations using sketches. Number all sheets and indicate total number of sheets. Make sure shield Identification is included on each sheet.
4. Attach auto profiler print out to this sheet if used.

QSA GLOBAL

SHIELDING PROFILE AND INSPECTION FORM (SPIF) F-Q-1806-2

"Engineering Test Sample"

Sheet 1 of 1

Shield Data

Model: Sentry 330	Serial # TP180C	Radionuclide: Co-60	Max. Capacity 330 Ci
Shield P/N: 86001-330	Shield Heat # C601-A06		Lot # 0916301210

Profile Process Data

Source Model: 424-13	Source Ser. # 277478	Radionuclide: Co-60	Activity: 312.8 Ci
Survey Inst. E600	Serial # 1863	Date Cal. 2/24/09	Date Due: 2/24/10
Inst. Probe: HP-270	Serial # 00542	Capacity Correction Factor: 1.06	

Location	Measured Dose Rate mR/hr: At Surface	Surface Corr. Factor	At 30 Cm [Note 2]	At One Meter	Adjusted Dose Rate mR/hr: At Surface	At 30 Cm [Note 2]	At one Meter [Note 1]
Top	17	1.09	NA	.56	20	NA	.59
Right	55	1.06		.96	62		1.02
Front	27	1.06		1.30	30		1.38
Left	55	1.06		1.43	62		1.52
Rear	30	1.06		1.45	34		1.54
Bottom	32	1.08		.74	37		.78
			Acceptance Criteria:		≤200	NA	≤ 405.0
			Result: (Check one)	Accept	✓	Reject	

Inspector: [signature] Date: 8/5/09 NCR # _____

Comments:
All Readings are Less Background of .04 mR/hr
(1 meter Readings taken with E600, SN 2750, cal 2 APR 09, due 2 APR 10 due to its 30 sec scaler capability.)

Notes:

1. Refer to F-Q-1806-1, Shield Efficiency Testing Surface Correction Factors for an existing device model, or F-Q-1806-3, Shield Profile Worksheet forOne meter acceptance limit
2. The 30cm readings are only required when specifically requested.
3. Additional sheets may be used to describe results or indicate reading locations using sketches. Number all sheets and indicate total number of sheets. Make sure shield identification is included on each sheet.
4. Consult instrument calibrationrecords for instrument uncertainty.

QSA GLOBAL

SHIELDING PROFILE AND INSPECTION FORM (SPIF) F-Q-1806-2

Sheet 1 of 1

Shield Data

Model: 86010-330	Serial # TP180D	Radionuclide: Co-60	Max. Capacity 330 Ci
Shield P/N: 86001-330	Shield Heat # C608-A06	Lot # 0919100408	

Profile Process Data

Source Model: 60011	Source Ser. # 27747E	Radionuclide: Co-60	Activity: 311.0 Ci
Survey Inst. E600	Serial # 1863	Date Cal. 2/24/08	Date Due: 2/24/10
Inst. Probe: HP-270	Serial # 00542	Capacity Correction Factor: 1.06	

	Measured Dose Rate mR/hr				Adjusted Dose Rate mR/hr		
Location	At Surface	Surface Corr. Factor	At 30 Cm [Note 2]	At one Meter	At Surface	At 30 Cm [Note 2]	At one Meter [Note 1]
Top	20	1.09	NA	.35	23	NA	.37
Right	50	1.06		.95	56		1.00
Front	35	1.06		.85	39		.90
Left	40	1.06		1.35	~~34~~ 44		1.43
Rear	36	1.06		1.35	40		1.43
Bottom	27	1.09		.4	31		.42
				Acceptance Criteria:	≤ 200	NA	≤ 105.0
				Result: (Check one) Accept	✓	Reject	

Inspector: [signature] Date: 8/20/09 NCR # _____

Comments:

1 meter Readings are less background of .05 mR/hr

Notes:

1. Refer to F-Q-1806-1, Shield Efficiency Testing Surface Correction Factors for an existing device model, or F-Q-1806-3, Shield Profile Worksheet forOne meter acceptance limit
2. The 30cm readings are only required when specifically requested.
3. Additional sheets may be used to describe results or indicate reading locations using sketches. Number all sheets and indicate total number of sheets. Make sure shield Identification is included on each sheet.
4. Consult instrument calibrationrecords for instrument uncertainty.

QSA GLOBAL

SHIELDING PROFILE AND INSPECTION FORM (SPIF) F-Q-1806-2

Sheet 1 of 1

Shield Data

Model: 98010-330	Serial # TP1808	Radionuclide: Co 60	Max. Capacity 330 Ci
Shield P/N: 86001-330	Shield Heat # C611-A06		Lot # 0919700907

Profile Process Data

Source Model: 424-13	Source Ser. # 277478	Radionuclide: Co-60	Activity: 310.1 Ci
Survey Inst. E600	Serial # 1863	Date Cal. 2/24/09	Date Due: 2/24/10
Inst. Probe: HP270	Serial # 00642	Capacity Correction Factor: 1.06	

Location	Measured Dose Rate mR/hr: At Surface	Surface Corr. Factor	At 30 Cm [Note 2]	At one Meter	Adjusted Dose Rate mR/hr: At Surface	At 30 Cm [Note 2]	At one Meter [Note 1]
Top	20	1.09	NA	.40	23	NA	.42
Right	45	1.06	↓	.81	51	↓	.86
Front	31	1.06	↓	.36	35	↓	.38
Left	35	1.06	↓	.88	39	↓	.93
Rear	34	1.06	↓	1.65	38	↓	1.7
Bottom	25	1.09	↓	.50	29	↓	.53
Acceptance Criteria:					≤200	NA	≤ ~~1.0~~ 5.0 8/31/09
Result: (Check one)				Accept	✓	Reject	

Inspector: [signature] Date: 8/28/09 NCR # _____

Comments:
* all one (1) meter Readings are less bacteground of .05

Notes:

1. Refer to F-Q-1806-1, Shield Efficiency Testing Surface Correction Factors for an existing device model, or F-Q-1806-3, Shield Profile Worksheet forOne meter acceptance limit
2. The 30cm readings are only required when specifically requested.
3. Additional sheets may be used to describe results or indicate reading locations using sketches. Number all sheets and indicate total number of sheets. Make sure shield identification is included on each sheet.
4. Consult instrument calibrationrecords for instrument uncertainty.

QSA GLOBAL

SHIELDING PROFILE AND INSPECTION FORM (SPIF) F-Q-1806-2

Sheet 1 of 1

Shield Data

Model: 86010-330	Serial # TP1806	Radionuclide: Co 60	Max. Capacity 330 Ci
Shield P/N: 86001-330	Shield Heat # C615-A06	Lot # 0922200819	

Profile Process Data

Source Model: 424-13	Source Ser. # 277478	Radionuclide: Co-60	Activity: 309.4 Ci
Survey Inst. E600	Serial # 1863	Date Cal. 2/24/08	Date Due: 2/24/10
Inst. Probe: HP270	Serial # 00542	Capacity Correction Factor: 1.07	

	Measured Dose Rate mR/hr				Adjusted Dose Rate mR/hr		
Location	At Surface	Surface Corr. Factor	At 30 Cm [Note 2]	At one Meter	At Surface	At 30 Cm [Note 2]	At one Meter [Note 1]
Top	20	1.09	NA	.4	23	NA	.4
Right	45	1.06		.9	51		1.0
Front	41	1.06		8/12/09 .9	47		1.0
Left	42	1.06		1.0	48		1.1
Rear	47	1.06		1.6	53		1.7
Bottom	25	1.09		.3	29		.3
				Acceptance Criteria:	< 200	NA	≤ 5.0
				Result: (Check one) Accept	✓	Reject	

Inspector: [signature] Date: 9/5/09 NCR # _____

Comments:

All 1 meter Readings are less background of 0.1

Notes:

1. Refer to F-Q-1806-1, Shield Efficiency Testing Surface Correction Factors for an existing device model, or F-Q-1806-3, Shield Profile Worksheet forOne meter acceptance limit
2. The 30cm readings are only required when specifically requeted.
3. Additional sheets may be used to describe results or indicate reading locations using sketches. Number all sheets and indicate total number of sheets. Make sure shield Identification is included on each sheet.
4. Consult instrument calibrationrecords for instrument uncertainty.

2.12.4 Test Plan 180 Report #2 dated 7 April 2010

QSA GLOBAL	Document Number **F-E-1808-1** **Test Plan Cover Sheet**	Revision 0

TEST PLAN 180 – REPORT #2

SENTRY TRANSPORT PACKAGE

HYPOTHETICAL ACCIDENT CONDITIONS (HAC) TRANSPORT PACKAGE TEST RESULTS

Originator	S. Gianni	Date:	29 MAR 2010

APPROVALS			
Engineering		Date:	29 Mar 10
Regulatory		Date:	7 Apr 10
Quality Assurance	C. Rempfer	Date:	7 Apr 10

TEST PLAN 180 - REPORT #2

SENTRY TRANSPORT PACKAGE

HYPOTHETICAL ACCIDENT CONDITIONS (HAC) TRANSPORT TEST RESULTS

Rev0

March 29, 2010

Contents

SECTION 1 INTRODUCTION 1

SECTION 2 CONSTRUCTION AND CONDITION OF TEST SPECIMENS 2

2.1 Test Specimen Construction 2

2.2 Test Specimen Modification 4

SECTION 3 FAILURE MODES AND TEST ORIENTATIONS 5

3.1 Test Failure Modes 5

3.2 Test Orientations 5

3.3 Free Drop Height Adjustment 6

SECTION 4 TEST RESULTS 7

4.1 Test Specimen TP180A Test Results 7

4.2 Test Specimen TP180B Test Results 11

4.3 Test Specimen TP180C Test Results 15

4.4 Test Specimen TP180D Test Results 19

4.5 Test Specimen TP180E Test Results 20

4.6 Test Specimen TP180G Test Results 24

SECTION 5 TEST ASSESSMENTS 28

5.1 Normal Conditions of Transport Test Assessment 28

5.2 30-Foot Free Drop & Puncture Test Assessment 28

5.3 Reverse Sequence 30-Foot Free Drop & Puncture Assessment 29

5.4 Thermal Test Assessment 29

5.4.1 Condition of Test Specimens before Thermal Test 29

5.4.2 Material Properties at Elevated Temperatures 30

5.5 Alternate SENTRY Configuration Assessments 30

5.5.1 SENTRY 330 or 110 Projector - Standard Configurations 30

5.5.2 SENTRY 330 or 110 Projector - Alternate Configurations 31

5.5.3 SENTRY Source Changer – Basic or Standard Configurations 31

SECTION 6 FINAL TEST ASSESSMENT 33

APPENDIX A: RADIATION PROFILE RESULTS 34

APPENDIX B: ADJUSTED DROP HEIGHT WORKSHEET 39

APPENDIX C: TEST DATA WORKSHEETS 40

APPENDIX D: TEST SPECIMEN MANUFACTURING RECORDS 40

APPENDIX E: TEST SPECIMEN INSPECTION RECORDS 40

APPENDIX F: TEST & MEASUREMENT CALIBRATION RECORDS 40

Test Plan 180 - Report #2

Section 1 Introduction

This report documents the hypothetical accident conditions (HAC) test results of Test Plan 180 performed on the SENTRY transport package. The results confirm the SENTRY transport package in any of its configurations identified in section 2.1 passes all the hypothetical accident conditions transport test requirements specified in Test Plan 180, the Code of Federal Regulations, 10 CFR Part 71, revised as of March 31, 1999 and criteria stated in the IAEA Regulations for the Safe Transport of Radioactive Material, No. TS-R-1 1996 Edition (Revised).

Also included in this report is an assessment addressing how the design changes to the rear plate and lock cover assemblies prompted by the normal conditions of transport (NCT) tests affect the NCT test results already documented in test plan 180 report#1. See section 5.1 for this assessment.

In order to determine the cumulative effect on the SENTRY transport package, the HAC test evaluation is based on the sequential application of the tests specified in the order indicated in 10 CFR Part 71. See section 5.2 for this assessment. Alternatively, if the test sequence had been performed in reverse order to the sequence identified in 10 CFR Part 71, with the puncture test performed before the 30-foot free drop, the damage indicates the there would be no change in the final assessment. See section 5.3 for the reverse order assessment.

The thermal test portion of the HAC test sequence is not performed based on the condition of the test specimens after the 30-foot free drop and puncture tests. See section 5.4 for this assessment.

The following is the pass criteria for a Type B(U) transport package after being subjected to the HAC test sequence:

- There shall be no loss or dispersal of radioactive material from the package.
- There shall be no external radiation dose rate exceeding 10-mSv/h (1-rem/h) at 1 m (40 in) from the external surface of the package.

The following HAC tests were not covered in the test plan and therefore not conducted.

- The ***crush test*** was not performed because is not required since the heaviest SENTRY transport package weighs below 800 lbs which is less than the 1100 lbs. minimum weight limit for the test.
- The ***immersion – fissile material test*** is not required since the SENTRY package does not transport fissile material.
- The ***immersion – all packages test*** is not needed since the materials of construction used in the SENTRY transport package are impervious to water and are not structurally affected when immersed in water of at least 15 meters (50 feet).

Section 2 Construction and Condition of Test Specimens

2.1 Test Specimen Construction

All SENTRY transport package test specimens are constructed in accordance with QSA Global engineering drawings and Quality Assurance Program. The drawings and manufacturing documents accurately depict the intended design along with methods for building and verifying the finished product. See Appendix D: Test Specimen Manufacturing Records and Appendix E: Test Specimen Inspection Records.

The SENTRY transport package consists of two subordinate device model numbers. The Model 860 represents the source projector version of the transport package and the Model 867 identifies the source changer version of the transport package. The Model 860 source projector is further subdivided into a 110 curie cobalt-60 capacity device and a 330 curie cobalt-60 device. All versions of the SENTRY transport package identified above can be used in either the basic (**Figure 2.1**) or standard configuration (**Figure 2.2** but with plastic inserts).

The basic configuration without the optional handling ribs represents the worst case test configuration for all possible failure modes identified in section 3.1 and test plan 180. The optional handing ribs add about 80 pounds to the basic package configuration, but also provide excellent impact absorption when attached. The additional 80 pounds applied to the basic configured test specimen in the planned orientations increases the impact energy by about 11%. The 11% increase in impact energy results in an 11% increase in deformation to the test specimen. In the orientations where the ribs do not provide impact absorption, the additional 11% deformation is not expected to result in any of the failure modes identified in section 3.1 and test plan 180.

Five test specimens, serial numbers TP180A thru TP180E, were all built to the basic configuration shown in **Figure 2.1** and one special test configuration, TP180G, was built with the optional handling ribs and without the plastic inserts shown in **Figure 2.2.**

The special test configuration shown in **Table 2.1** is the standard configuration without the plastic rib inserts included. This special configuration would not normally be used as a SENTRY transport package, but is tested to demonstrate compliance and allow shipment in the event the plastic rib inserts become removed or damaged.

Table 2.1: Test Specimen Manufacturing Documentation and Identification

Test Specimen Configuration	Assembly Number	TMI	Serial Number(s)	Weight (Lbs)
SENTRY 330 Basic See Figure 2.1	TP86015-330	189	TP180A	655
			TP180B	656
			TP180C	652
			TP180D	657
			TP180E	659
			TP180G	661
SENTRY 330 Special See Figure 2.2	TP86000-330X	199	TP180G	728

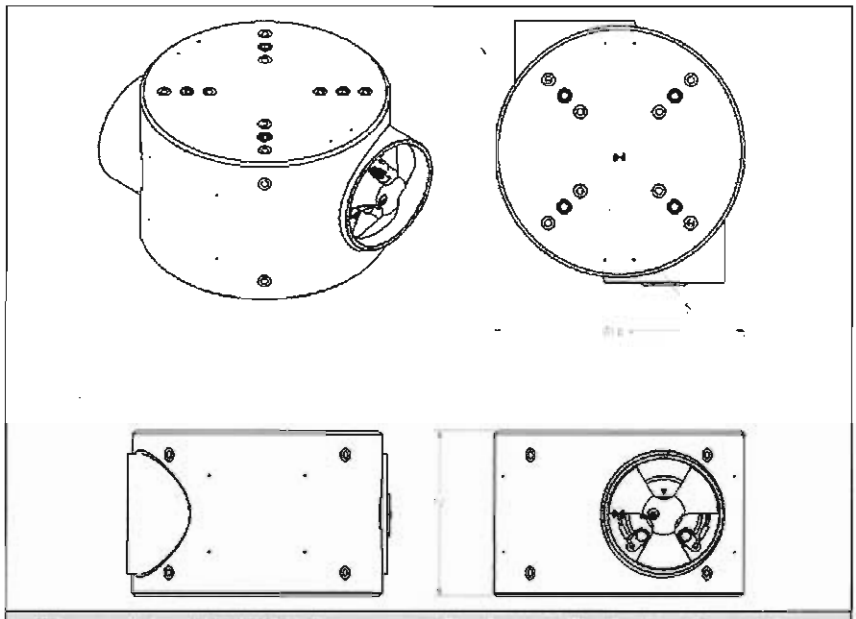

Figure 2.1: SENTRY Transport Package - Basic Configuration. Test Specimens TP180A thru TP180E

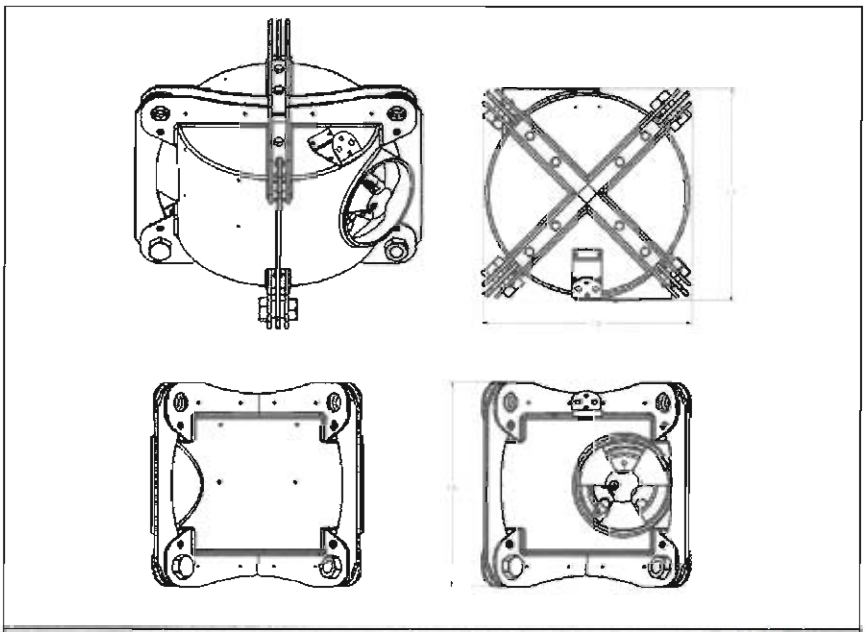

Figure 2.2: SENTRY Transport Package - Special Configuration. Test Specimen TP180G.

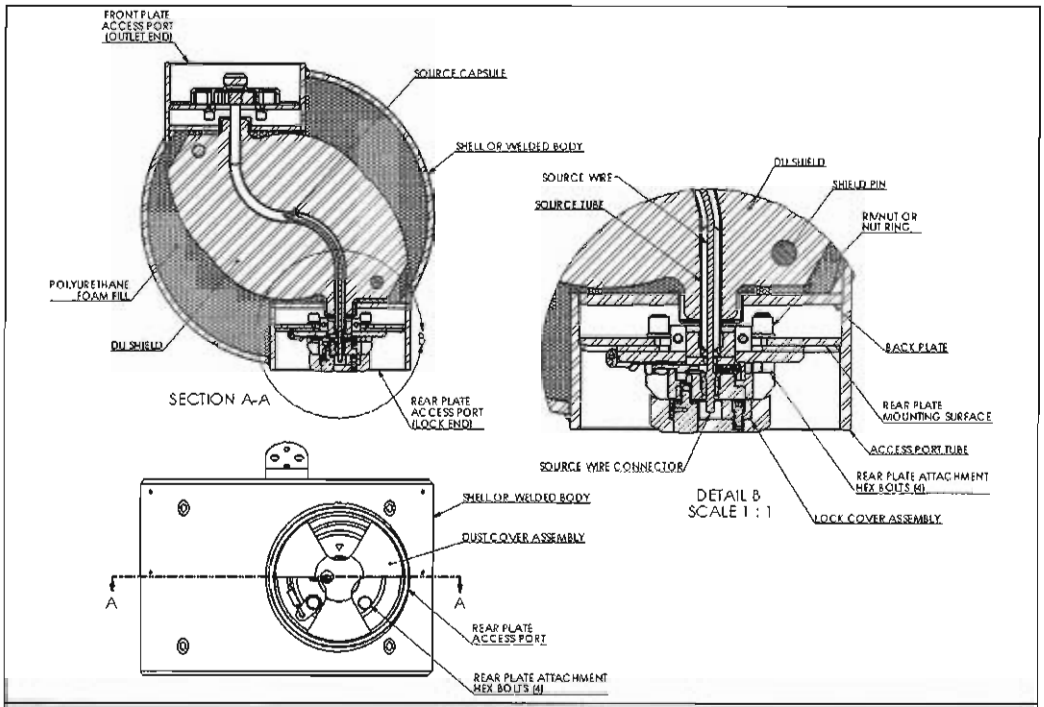

Figure 2.3: SENTRY Transport Package Common Components

Figure 2.3 shows the major assemblies and common components of the SENTRY transport package. The nomenclature used in **Figure 2.3** is referenced throughout this report.

The SENTRY transport package primary containment system, known as the Model 600 source capsule assembly, is tested separately to the ANSI/ISO class 4 or 7MPa pressure test requirements. Therefore, the initial internal pressure within the primary containment system is not requirement to be the maximum normal operating pressure, or if more unfavorable, a lower internal pressure, consistent with the ambient temperature before and after the tests. The secondary containment system, the transport package rear plate assembly and shield container, is open to the atmosphere and therefore in constant equilibrium with changing operating pressures.

The structural materials used in the construction SENTRY transport package retain their key mechanical and physical properties between -40°C (-40°F) and +38°C (+100°F). Therefore, the temperature of the test specimen did not need to be adjusted for the tests performed in test plan 180.

2.2 Test Specimen Modification

The lock cover and rear plate assemblies were redesigned after the normal conditions of transport tests (see test plan 180 report#1). The redesign was necessary to ensure the lock cover and rear plate assemblies remained in place for the HAC test sequence. All test specimens built for test plan 180 were updated and documented with this design change. This is the only change to the test specimens built for test plan 180. All deviations and/or changes to the test specimens are recorded on the temporary manufacturing instructions (TMI) for each test specimen. See Appendix D: Test Specimen Manufacturing Records

Section 3 Failure Modes and Test Orientations

3.1 Test Failure Modes

Each of the test orientations, shown in **Table 3.1,** targets a specific area on the package in an attempt to damage the package enough to cause an elevation in radiation measurements. The possible failures considered under the required test conditions potentially leading to elevated radiation measurements on and around the transport package include the following:

1. Fracture of the depleted uranium shield allowing a direct beam of radiation to transmit to the exterior of the package.
2. Extreme displacement of the shield within the package enough to position the source in a much less shielded location.
3. Any release or loss of control of the source caused by either; damage to the rear plate assembly enough to allow the source to exit the package, loss of all rear plate hex bolts and/or detachment of the source capsule from the source wire assembly.
4. A significant rupture or opening in the exterior of the package leading to loss of foam protecting the shield during the thermal test.

3.2 Test Orientations

Table 3.1 shows the planned test orientation used for each test specimen in the 30-foot free drop test. These orientations attempt to exploit the failure modes discussed in section 3.1. The orientation for the puncture tests uses the same orientation as the 30-foot drop test unless another worst case orientation is selected to produce one of the test failure modes.

Table 3.1: 30-Foot Free Drop Test Orientation Review

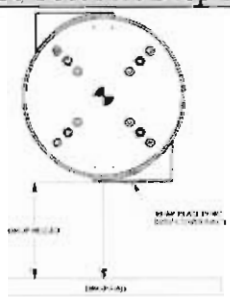 **Test Specimen: TP180A** Hit dust cover of rear plate assembly.	**Test Specimen: TP180B** Hit edge of rear plate access port tube.
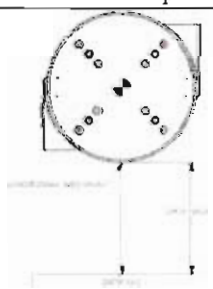 **Test Specimen: TP180C** Hit side of package directly on weld seam.	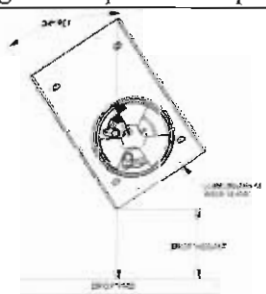 **Test Specimen: TP180D** Hit corner of package directly on weld seam.

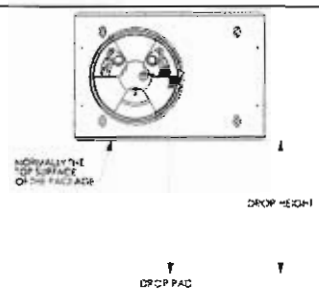 **Test Specimen: TP180E** Hit top surface of package.	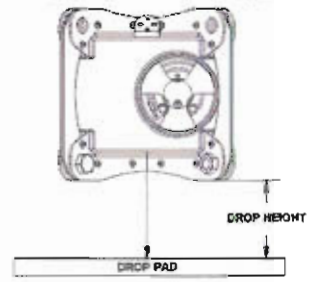 **Test Specimen: TP180G** Hit bottom of rib surfaces

3.3 Free Drop Height Adjustment

The drop test heights specified in 10 CFR Part 71 are adjusted higher in all the 30-foot drop and 40-inch puncture tests. The adjusted drop height allows for future SENTRY transport packages built heavier than the actual test specimens but less than the maximum allowable weight specified for the transport package configuration to comply with 10 CFR Part 71.

The adjusted drop height uses a common height in both the 30-foot drop and 40-inch puncture tests. The common adjusted drop height is determined by multiplying the worst case weight ratio by the required drop test height, 30-feet or 40-inches. The worst case weight ratio is calculated by dividing the maximum allowable weight by the lightest test specimen built in a given configuration.

Test specimen TP180C, the lightest specimen built in the basic configuration, weighs 652 lbs. The maximum allowable transport package weight in the basic configuration is 700 lbs. Therefore, the worst case weight ratio for test specimens built in the basic configuration is 700/652 = 1.074.

TP180G weighs 728 lbs and since the special configuration is essentially a slight modification of the standard configuration, it therefore represents the lightest specimen in the standard configuration. The maximum allowable weight for a standard configuration package is 780 lbs. The worst case weight ratio for the special configuration is 1.071.

The common adjusted drop height for all 30-foot drop tests is equal to 32.2-feet (1.074 times 30-feet). All puncture drops use the common adjusted drop height of 3.6 feet (1.074 times 3.33-feet).

See Appendix B: Adjusted Drop Height Worksheet for the calculated adjusted drop heights for each test specimen. All calculated adjusted drop heights are lower than or equal to the common adjusted drop height used in the testing.

The impact energy produced by the common adjusted height in all drop tests is equal to or greater than the impact energy produced by the transport package built to its maximum weight and dropped at the required drop height specified in 10 CFR Part 71.

Section 4 Test Results

4.1 Test Specimen TP180A Test Results

Test Specimen TP180A was dropped twice from 32.2 feet in the same orientation. The impact in the first 30-foot drop did not appear to hit directly on the face of the dust cover protecting the rear plate. However, this impact did cause the corner of the package and edge of the rear plate access port to slightly deform into the package.

The second 30-foot drop hit the dust cover as planned. This impact caused additional deformation to the access port, produced a fracture through the dust cover and compressed the plunger lock into the rear plate assembly.

The puncture drop targeted the fractured dust cover at an angle in an attempt to pry off the rear plate assembly and its attachment hex bolts. The specimen was dropped 3.6 feet above the puncture bar onto the dust cover tearing off about 1/3 of the cover. No test failure identified in section 3.1 appeared immediately after the tests.

After the 30-foot and puncture tests, the simulated (demo) source remained secure in the fully shielded position. The radiation profile measurements taken on the package surface and at 1 meter with the source in the same location after the puncture test show no appreciable elevation in dose levels compared to measurements taken before testing. The slight measurement difference can be attributed to a minor shift in the shield relative to the exterior of the package and variation in the accuracy of the measuring equipment (+/-10% for the E600 probe and meter). See Appendix A: Radiation Profile Results for the actual inspection data. This confirms test failure numbers 1 through 3 in section 3.1 did not occur.

Table 4.1.1: TP180A Maximum Radiation Measurements

At Surface of Package		At 1 Meter from Surface of Package	
Initial Build	**Post Test**	**Initial Build**	**Post Test**
60 mR/h	64 mR/h	1.3 mR/h	1.0 mR/h

The 30-foot and puncture drop sequence did not create an opening in the package exterior. With no opening in the package to allow the foam fill to fall away from the DU shield in a thermal test, the package will survive the thermal test without elevating radiation levels on or around the transport package. This confirms test failure number 4 in section 3.1 did not occur.

The SENTRY transport package in this orientation satisfies the HAC test requirements of Test Plan 180, the Code of Federal Regulations, 10 CFR Part 71, revised as of March 31, 1999 and criteria stated in the IAEA Regulations for the Safe Transport of Radioactive Material, No. TS-R-1 1996 Edition (Revised).

Table 4.1.2: TP180A Both 30-Foot Free Drop Test Setups	
Changes to the planned drop orientation.	None
Test Specimen Weight	655 pounds
Actual Drop Height	9.8 Meters (32.2 Feet)
Temperature during test	53 F

Figure 4.1.1: TP180A 30-Foot Free Drop Side View Orientation

Figure 4.1.2: TP180A 30-Foot Free Drop End View Orientation

Table 4.1.3: TP180A First 30-Foot Free Drop Test Damage Report	
Impact missed the end face of the plastic dust cover and instead hit off to one side of rear access port tube. • The rear access port tube bent in towards the center of the port. • The edge of the shell dented in near the rear access port. • No damage to the rear plate or the rear plate attachment bolts.	
Pre-test source location dimension	6.00 inches
Post-test source location dimension	See second drop

Figure 4.1.3: Damage to TP180A from First 30-Foot Free Drop Test – Rear Plate.

Figure 4.1.4: Damage to TP180A from First 30-Foot Free Drop Test – Front Plate.

Table 4.1.4: TP180A Second 30-Foot Free Drop Test Damage Report	
The second impact hit the face of the plastic dust cover. • The rear access port tube bent further in towards the center of the port fracturing the plastic dust cover and compressing the plunger lock inward. • The rear plate is in good condition. • No damage to the rear plate attachment bolts. • No change in the source location within the package.	
Pre-test source location dimension	6.00 inches
Post-test source location dimension	6.00 inches
Figure 4.1.5: Damage to TP180A from Second 30-Foot Free Drop Test.	**Figure 4.1.6: Damage to TP180A from Second 30-Foot Free Drop Test.**

Table 4.1.5: TP180A Puncture Drop Test Setup	
Changes to the planned drop orientation.	None
Test Specimen Weight	655 pounds
Actual Drop Height	1.1 Meters (3.6 Feet)
Temperature during test	42 F
Figure 4.1.7: TP180A Puncture Drop Side View Orientation	**Figure 4.1.8: TP180A Puncture Drop End View Orientation**

Table 4.1.6: TP180A Puncture Drop Test Damage Report	
No damage to the rear plate or the rear plate attachment bolts.	
Pre-test source location dimension	6.00 inches
Post-test and radiation profile inspection source location dimension	6.12 inches

Figure 4.1.9: Damage to TP180A from Puncture Drop Test – Rear Plate.

Figure 4.1.10: Close-up of Damage to TP180A from Puncture Drop Test.

Table 4.1.7: TP180A Post Test Examination Photos

Figure 4.1.11: Removed Dust Cover piece.

Figure 4.1.12: Removed Lock & 3 Bolts.

Figure 4.1.13: Removed Dust Cover piece.

Figure 4.1.14: Removed Rear Plate.

4.2 Test Specimen TP180B Test Results

Test Specimen TP180B was dropped from 32.2 feet in its planned orientation. The impact hit directly on the protruding edge of the rear plate access port tube as planned. The impact caused the access port tube to flatten into the access port compressing the dust cover against the rear plate assembly.

The puncture drop targeted the dust cover and the rear plate assembly in an attempt to pry off the rear plate assembly from the package. The specimen was dropped 3.6 feet above the puncture bar onto the plastic dust cover resulting in no damage to the cover, rear plate or the hex bolts. No test failure identified in section 3.1 appeared immediately after the tests.

After the 30-foot and puncture tests, the simulated (demo) source remained secure in the fully shielded position. The radiation profile measurements taken on the package surface and at 1 meter with the source in the same location after the puncture test show no appreciable elevation in dose levels compared to measurements taken before testing. The slight measurement difference can be attributed to a minor shift in the shield relative to the exterior of the package and variation in the accuracy of the measuring equipment (+/-10% for the E600 probe and meter). See Appendix A: Radiation Profile Results for the actual inspection data. This confirms test failure numbers 1 through 3 in section 3.1 did not occur.

Table 4.2.1: TP180B Maximum Radiation Measurements

At Surface of Package		At 1 Meter from Surface of Package	
Initial Build	**Post Test**	**Initial Build**	**Post Test**
56 mR/h	61 mR/h	1.3 mR/h	1.1 mR/h

The 30-foot and puncture drop sequence did not create an opening in the package shell. With no opening in the package to allow the foam fill to fall away from the DU shield in a thermal test, the package will therefore survive the thermal test without elevating radiation levels in or around the transport package. This confirms test failure number 4 in section 3.1 did not occur.

The SENTRY transport package in this orientation satisfies the HAC test requirements of Test Plan 180, the Code of Federal Regulations, 10 CFR Part 71, revised as of March 31, 1999 and criteria stated in the IAEA Regulations for the Safe Transport of Radioactive Material, No. TS-R-1 1996 Edition (Revised).

Table 4.2.2: TP180B 30-Foot Free Drop Test Setup	
Changes to the planned drop orientation.	None
Test Specimen Weight	656 pounds
Actual Drop Height	9.8 Meters (32.2 Feet)
Temperature during test	47 F

Figure 4.2.1: TP180B 30-Foot Free Drop Side View Orientation

Figure 4.2.2: TP180B 30-Foot Free Drop End View Orientation

Table 4.2.3. TP180B 30-Foot Free Drop Test Damage Report	
Impact on protruding edge of rear plate access port tube. • The rear access port tube is completely bent in towards the dust cover. • The dust cover and rear plate are crimped in place inside the access port. • No damage was found on the rear plate attachment bolts. • Slight change in the source location within the package.	
Pre-test source location dimension	6.06 inches
Post-test source location dimension	6.00 inches

Figure 4.2.3: Damage to TP180B from 30-Foot Free Drop Test.

Figure 4.2.4: Close-up of Damage to TP180B from 30-Foot Free Drop Test.

Table 4.2.4: TP180B Puncture Drop Test Setup	
Changes to the planned drop orientation.	None
Test Specimen Weight	656 pounds
Actual Drop Height	1.1 Meters (3.6 Feet)
Temperature during test	44 F

Figure 4.2.5: TP180B Puncture Drop Side View Orientation

Figure 4.2.6: TP180B Puncture Drop End View Orientation

Table 4.2.5: TP180B Puncture Drop Test Damage Report	
No additional damage found.	
Pre-test source location dimension	6.00 inches
Post-test and radiation profile inspection source location dimension	6.06 inches

Figure 4.2.7: Damage to TP180B from Puncture Drop Test.

Figure 4.2.8: Close-up of Damage to TP180B from Puncture Drop Test.

Table 4.2.6: TP180B Post Test Examination Photos

Figure 4.2.9: Broken Lock Cover Pins.

Figure 4.2.10: Removed Dust Cover.

Figure 4.2.11: Removed Crushed Port.

Figure 4.2.12: Rear Plate Access Port.

Figure 4.2.13: Rear Plate Side View.

Figure 4.2.14: Hex Bolt Close-up.

4.3 Test Specimen TP180C Test Results

Test Specimen TP180C was dropped twice from 32.2 feet in two different orientations. The test specimen in the first 30-foot drop rotated slightly and impacted on the corner weld at the weld seam intersection with the longitudinal weld of the package. This caused localized deformation and flattening to the circular corner of the package. This impact location happens to be the impact target for Test Specimen TP180D. As a result, this drop can be considered the 30-foot free drop test for TP180D.

Based on the minimal damage to the test specimen, the test team approved to continue testing TP180C and drop it again from 32.2 feet onto it planned orientation. The second drop at 32.2 feet hit squarely on the longitudinal weld seam as planned. This impact caused the curved surface of the body to flatten along the full length of the longitudinal weld seam.

The puncture drop targeted the intersection of both the corner and longitudinal weld seams in an attempt to break open the welded shell body and expose the foam fill. The specimen was dropped from 3.6 feet above the puncture bar producing only superficial contact marks at the corner. No test failure identified in section 3.1 appeared immediately after all the tests.

After the 30-foot and puncture tests, the simulated (demo) source remained secure in the fully shielded position. The radiation profile measurements taken on the package surface and at 1 meter with the source in the same location after the puncture test show no appreciable elevation in dose levels compared to measurements taken before testing. The slight measurement difference can be attributed to a minor shift in the shield relative to the exterior of the package and variation in the accuracy of the measuring equipment (+/-10% for the E600 probe and meter). See Appendix A: Radiation Profile Results for the actual inspection data. This confirms test failure numbers 1 through 3 in section 3.1 did not occur.

Table 4.3.1: TP180C Maximum Radiation Measurements

At Surface of Package		At 1 Meter from Surface of Package	
Initial Build	**Post Test**	**Initial Build**	**Post Test**
62 mR/h	71 mR/h	1.5 mR/h	1.3 mR/h

During the post test examination, a shift in the shield within the package was noticed. The shift resulted in fracturing the tip of the source tube at the rear access port end. However, the shift and broken source tube tip did not adversely affect the ability of the package to meet the acceptance criteria after the tests.

The 30-foot and puncture drop sequence did not create an opening in the package exterior. With no opening in the package to allow the foam fill to fall away from the DU shield in a thermal test, the package will survive the thermal test without elevating radiation levels on or around the transport package. This confirms test failure number 4 in section 3.1 did not occur.

The SENTRY transport package in this orientation satisfies the HAC test requirements of Test Plan 180, the Code of Federal Regulations, 10 CFR Part 71, revised as of March 31, 1999 and criteria stated in the IAEA Regulations for the Safe Transport of Radioactive Material, No. TS-R-1 1996 Edition (Revised).

Table 4.3.2: TP180C Both 30-Foot Free Drop Test Setups	
Changes to the planned drop orientation.	None
Test Specimen Weight	652 pounds
Actual Drop Height	9.8 Meters (32.2 Feet)
Temperature during test	47 F
Figure 4.3.1: TP180C 30-Foot Free Drop Side View Orientation	**Figure 4.3.2: TP180C 30-Foot Free Drop End View Orientation**

Table 4.3.3: TP180C First 30-Foot Free Drop Test Damage Report	
The impact point is on the circular edge weld seam of the shell. This is the impact point for test specimen TP180D. This specimen (TP180C) will be dropped again in the same orientation to try to hit longitudinal weld seam. As a result, TP180D not need to be tested. Circular edge shows about an 8 inch long dent with bulging on flat end plate and circular shell. No break in circular weld seam. No damage was found on the simulated source wire and/or rear plate attachment bolts.	
Pre-test source location dimension	6.03 inches
Post-test source location dimension	See second drop
Figure 4.3.3: Damage to TP180C from First 30-Foot Free Drop Test.	**Figure 4.3.4: Close-up of Damage to TP180C from First 30-Foot Free Drop Test.**

Table 4.3.4: TP180C Second 30-Foot Free Drop Test Damage Report	
The shells longitudinal seam is flattened into the package. This is no break in the longitudinal weld seam. The bulge on the circular shell is smaller. No damage was found on the simulated source wire and/or rear plate attachment bolts. Only a slight change in the source location within the package. A change in the external radiation dose levels of the package is not expected.	
Pre-test source location dimension	6.03 inches
Post-test source location dimension	6.00 inches

Figure 4.3.5: Damage to TP180C from Second 30-Foot Free Drop Test.

Figure 4.3.6: Close-up of Damage to TP180C from Second 30-Foot Free Drop Test.

Table 4.3.5: TP180C Puncture Drop Test Setup	
Changes to the planned drop orientation.	Combines both TP180C & TP180D
Test Specimen Weight	652 pounds
Actual Drop Height	1.1 Meters (3.6 Feet)
Temperature during test	44 F

Figure 4.3.7: TP180C Puncture Drop Side View Orientation

Figure 4.3.8: TP180C Puncture Drop End View Orientation

Table 4.3.6: TP180C Puncture Drop Test Damage Report	
No damage to the rear plate or the rear plate attachment bolts.	
Pre-test source location dimension	6.00 inches
Post-test and radiation profile inspection source location dimension	6.00 inches
Figure 4.3.9: Damage to TP180C from Puncture Drop Test.	**Figure 4.3.10: Close-up of Damage to TP180C from Puncture Drop Test.**

Table 4.3.7: TP180C Post Test Examination Photos	
Figure 4.3.11: Removed Dust Cover.	**Figure 4.3.12: Removed Rear Plate.**
Figure 4.3.13: Removed Broken Source Tube.	**Figure 4.3.14: Shield shifted to left relative to rear plate mounting plate.**

4.4 Test Specimen TP180D Test Results

Test specimen TP180D was not tested because TP180C was tested in the planned orientation for TP180D. See test results for TP180C in section 4.3.

4.5 Test Specimen TP180E Test Results

Test Specimen TP180E was dropped from 32.2 feet in its planned orientation. The impact appeared as expected during the test, but a review of the drop test video tape after the test showed the test specimen tilted slightly just before impact - first hitting the corner of the package before rotating onto the flat endplate. The dent to the corner of the package confirms this to be true.

The test team approved to retest the TP180E orientation on another test specimen, TP180G because the impact surface of TP180E had been deformed. The deformation could interfere with the intended impact. The handling ribs on TP180G were removed before retesting to ensure there were no obstructions or unintentional energy absorption. The impact target is the large flat surface of the top endplate. The results of this test are covered under section 4.6.

The puncture test was performed twice from 3.6 feet in the same orientation because the first drop appeared to miss the target. For the puncture test, the test team approved to again target the dust cover and rear plate assembly instead of the planned orientation of attacking the flat surface of the thick top endplate. The justification being no damage was likely to occur by attacking the thick endplate and an attack on the dust cover would provide a better chance of affecting the source security in the package. The damage from the puncture bar caused some deformation to the rear access port and only a superficial contact scratch to the dust cover. No test failure identified in section 3.1 appeared immediately after all the tests.

After the 30-foot and puncture tests, the simulated (demo) source remained secure in the fully shielded position. The radiation profile measurements taken on the package surface and at 1 meter with the source in the same location after the puncture test show no appreciable elevation in dose levels compared to measurements taken before testing. The slight measurement difference can be attributed to a minor shift in the shield relative to the exterior of the package and variation in the accuracy of the measuring equipment (+/-10% for the E600 probe and meter). See Appendix A: Radiation Profile Results for the actual inspection data. This confirms test failure numbers 1 through 3 in section 3.1 did not occur.

Table 4.5.1: TP180E Maximum Radiation Measurements

At Surface of Package		At 1 Meter from Surface of Package	
Initial Build	**Post Test**	**Initial Build**	**Post Test**
51 mR/h	39 mR/h	1.7 mR/h	1.2 mR/h

The 30-foot and puncture drop sequence did not create an opening in the package exterior. With no opening in the package to allow the foam fill to fall away from the DU shield in a thermal test, the package will survive the thermal test without elevating radiation levels on or around the transport package. This confirms test failure number 4 in section 3.1 did not occur.

The SENTRY transport package in this orientation satisfies the HAC test requirements of Test Plan 180, the Code of Federal Regulations, 10 CFR Part 71, revised as of March 31, 1999 and criteria stated in the IAEA Regulations for the Safe Transport of Radioactive Material, No. TS-R-1 1996 Edition (Revised).

Table 4.5.2: TP180E 30-Foot Free Drop Test Setup	
Changes to the planned drop orientation.	None
Test Specimen Weight	659 pounds
Actual Drop Height	9.8 Meters (32.3 Feet)
Temperature during test	48 F

Figure 4.5.1: TP180E 30-Foot Free Drop Side View Orientation

Figure 4.5.2: TP180E 30-Foot Free Drop End View Orientation

Table 4.5.3: TP180E 30-Foot Free Drop Test Damage Report	
The circular edge seam of the shell body shows a slight deformation. No break in the weld seam. No damage was found on the simulated source wire and/or rear plate attachment bolts. Only a minor source location change within the package. There is no expected change in the external radiation dose levels of the package.	
Pre-test source location dimension	6.00 inches
Post-test source location dimension	6.06 inches

Figure 4.5.3: Damage to TP180E from 30-Foot Free Drop Test.

Figure 4.5.4: Damage to TP180E from 30-Foot Free Drop Test.

Table 4.5.4: TP180E Puncture Drop Test Setup for Both Drops	
Changes to the planned drop orientation.	Attack rear plate dust cover instead of top flat surface of welded shell body.
Test Specimen Weight	659 pounds
Actual Drop Height	1.1 Meters (3.6 Feet)
Temperature during test	45 F
Figure 4.5.5: TP180E Puncture Drop Side View Orientation	**Figure 4.5.6: TP180E Puncture Drop End View Orientation**

Table 4.5.5: TP180E Puncture Drop Test Damage Report for Both Drops	
• Scratch and superficial dent on plastic dust cover. • No damage to the rear plate or the rear plate attachment bolts.	
Pre-test source location dimension	6.06 inches
Post-test and radiation profile inspection source location dimension	6.00 inches
Figure 4.5.7: Damage to TP180E from Puncture Drop Test.	**Figure 4.5.8: Close-up of Damage to TP180E from Puncture Drop Test.**

Table 4.5.6: TP180E Post Test Examination Photos

Figure 4.5.9: Removed Dust Cover.

Figure 4.5.10: Removed Source Assembly.

Figure 4.5.11: Removed Rear Plate.

Figure 4.5.12: Rear Plate Close-up.

Figure 4.5.13: Rear Plate Access Port.

Figure 4.5.14: Source Tube Close-up.

4.6 Test Specimen TP180G Test Results

Test Specimen TP180G was dropped twice from 32.2 feet in two different orientations. The test specimen was first dropped in its normal transport orientation with the handling ribs attached. This impact fractured a few rib mounting screws and caused some of the handling ribs to deform and crack. The bottom ribs were slightly compressed into the bottom endplate of the package causing local deformations and shallow cuts.

The second drop 30-foot free drop test was to retest the orientation planned for TP180E. This test was performed with the handing ribs of TP180G removed. The test orientation was with the package inverted and the top endplate facing down as in TP180E. The large flat face of the top endplate is the impact target. The second impact hit squarely on the top endplate causing no obvious damage to the package except for fracturing the brass shaft in the front plate outlet port knob. The fracture caused the knob to be completely removed from the package. Without the knob in place, the front plate rotor is allowed to turn freely and align the port shield into the operate position. This will increase radiation dose levels locally on the surface of the package and only slightly at a meter away.

The test team approved not to perform the puncture test for this test specimen since all potential failure modes identified in section 3.1 had already been addressed in the previous drop tests. Any further damage to the front plate assembly would not change the radiation dose levels on or around the package because the rotor shield is now considered removed from the package. No test failure identified in section 3.1 appeared immediately after all the tests.

After both 30-foot drop tests, the simulated (demo) source remained secure in the fully shielded position. Except for the front plate assembly outlet port, the radiation measurements taken on the package surface and at 1 meter with the source in the same location after the drop tests show no elevation in dose levels compared to measurements taken before testing. The radiation measurement taken at the front plate outlet port without the port shield showed an increase of 478-mR/hr at the surface of the package, but the 1 meter measurements showed only 2.2-mR/hr at the front end area. See Appendix A: Radiation Profile Results. This confirms test failure numbers 1 through 3 in section 3.1 did not occur.

Table 4.6.1: TP180G Maximum Radiation Measurements

At Surface of Package		At 1 Meter from Surface of Package	
Initial Build	**Post Test**	**Initial Build**	**Post Test**
53 mR/h	532 mR/h	1.7 mR/h	2.2 mR/h

Both 30-foot drop tests did not create an opening in the package exterior. With no opening in the package to allow the foam fill to fall away from the DU shield in a thermal test, the package will survive the thermal test without elevating radiation levels on or around the transport package. This confirms test failure number 4 in section 3.1 did not occur.

The SENTRY transport package in this orientation satisfies the HAC test requirements of Test Plan 180, the Code of Federal Regulations, 10 CFR Part 71, revised as of March 31, 1999 and criteria stated in the IAEA Regulations for the Safe Transport of Radioactive Material, No. TS-R-1 1996 Edition (Revised).

Table 4.6.2: TP180G First 30-Foot Free Drop Test Setup	
Changes to the planned drop orientation.	No planned orientation. Dropped in its typical transport orientation.
Test Specimen Weight	728 pounds (with ribs)
Actual Drop Height	9.8 Meters (32.2 Feet)
Temperature during test	48 F

Figure 4.6.1: TP180G 30-Foot Free Drop Side View Orientation

Figure 4.6.2: TP180G 30-Foot Free Drop End View Orientation

Table 4.6.3: TP180G First 30-Foot Free Drop Test Damage Report	
• All handling ribs remained attached but multiple rib mounting fasteners failed in shear. • Bottom ribs bent slightly. • 1/32-inch deep indents found in the welded body caused by bottom rib compression. • No damage to the simulated source wire and/or rear plate attachment bolts. • Negligible change in the source location within the package.	
Pre-test source location dimension	6.18 inches
Post-test source location dimension	6.12 inches

Figure 4.6.3: Damage to TP180G from 30-Foot Free Drop Test.

Figure 4.6.4: Close-up of Damage to TP180G from 30-Foot Free Drop Test.

Figure 4.6.5: Close-up of rib bite mark in shell after drop.

Figure 4.6.6: Rib mounting hardware failed in shear.

Table 4.6.4: TP180G Second 30-Foot Free Drop Test Setup	
Changes to the planned drop orientation.	Use planned orientation for TP180E
Test Specimen Weight	661 pounds (without ribs)
Actual Drop Height	9.8 Meters (32.2 Feet)
Temperature during test	66 F

Figure 4.6.7: TP180G 30-Foot Free Drop Side View Orientation

Figure 4.6.8: TP180G 30-Foot Free Drop End View Orientation

Table 4.6.5: TP180G Second 30-Foot Free Drop Test Damage Report	
• Impact imprint on bottom end of welded body. • Knob of front plate assembly detached from specimen. • Brass shaft of knob failed in shear at rotor surface. • Position of shielded rotor unknown – profile with rotor open.	
Pre-test source location dimension	6.12 inches
Post-test and radiation profile inspection source location dimension	6.12 inches
Figure 4.6.9: Damage to TP180G from 30-Foot Free Drop Test.	**Figure 4.6.10: Close-up of rear plate assembly on TP180G after 30-Foot Free Drop Test.**

Table 4.6.6. TP180G Post Test Examination	
Figure 4.6.11: Front Plate Access Port	**Figure 4.6.12: Broken Knob Shaft.**
Figure 4.6.13: Broken Knob Shaft Rear Plate Access Port.	**Figure 4.6.14: Rear Plate Access Port.**

Section 5 Test Assessments

5.1 Normal Conditions of Transport Test Assessment

The results in this test report shall be used as the basis for demonstrating the SENTRY transport package with the new rear plate modification also meets the normal conditions of transport 4-foot free drop test requirement. The new rear plate assembly was replaced on all test specimens after the normal conditions of transport tests and before the HAC tests were performed. Radiation profile results of all tested orientations except for the second TP180G 30-foot free drop showed no significant change in the dose levels at the surface of the package after the HAC tests.

The profile results of TP180G did show an area on the front plate assembly at the outlet port (without the port shield in place) as having a significant change in dose levels after the second 30-foot free drop test. The radiation profile inspection for this specimen needed to be performed without the port shield in place because the rotor knob detached allowing the rotor to turn freely after the second 30-foot drop test.

However, the front plate assembly was not part of the new rear plate assembly and the new rear plate assembly did not show any change in dose levels at the surface of the package. The profile results after the normal conditions of transport of test specimen TP180E (same drop orientation as 2nd 30-foot drop for TP180G) can be used to demonstrate the front plate assembly can withstand the 4-foot free drop test without any significant increase in dose levels on the surface of the package.

5.2 30-Foot Free Drop & Puncture Test Assessment

All 30-foot free drop and puncture tests were performed in accordance with test plan 180, 10 CFR 71, IAEA TS-R-1 1996.

After the 30-foot free drop and puncture tests, all test specimens continued to successfully meet the hypothetical accident conditions transport requirements of 10 CFR 71 and IAEA TS-R-1 1996. After the test, there was:

- No loss or dispersal of radioactive material or contents.
- No external radiation dose rate exceeding 10-mSv/h (1-rem/h) at 1 m (40 in) from the external surface of the package.
- No escape of other radioactive material exceeding a total amount A_2 in 1 week.

5.3 Reverse Sequence 30-Foot Free Drop & Puncture Assessment

If we were to reverse the test sequence and perform the puncture test before the 30-foot free drop, the SENTRY transport package would continue to meet the HAC requirements of 10 CFR Part 71. The test results indicate there is no evidence the puncture bar is capable of affecting the source security of the package.

For the sake of argument, let's say the puncture bar completely sheared off the stainless steel pins of the lock cover along with the plastic dust cover and additionally sheared off the exposed cylindrical portion of the source connector in the process. The ball end of the connector would remain attached to the source wire because it is protected in the selector ring retainer. This continued attachment would keep the source secure and shielded.

The results show the puncture test does not damage the rear plate assembly and its attachment system recessed into the access port of the package. The recessed rear plate assembly prevents an impact of a subsequent 30-foot free drop test in any orientation to damage the components of the rear plate assembly enough to allow the source wire assembly to move out of its fully shielded position within the package.

This allows the SENTRY transport package to successfully meet the hypothetical accident conditions transport test requirements of IAEA TS-R-1 1996.

5.4 Thermal Test Assessment

Review of the damage to all test specimens after the drop tests suggest the fire test would have no affect on the radiation measurements taken after the drop tests. The reasons for this can be justified based on the condition of the test specimen after the drop tests and the properties of the materials used to secure and shield the source within the specimen.

5.4.1 Condition of Test Specimens before Thermal Test

- The internal structure for supporting the DU shield is intact and fully functional. The structure consists of the depleted uranium shield, the stainless steel welded shell body, the titanium shield locating pins, the stainless steel access port tubes, and the stainless steel rear mounting plates with stainless steel rivet nuts. A copper barrier exists between all stainless steel components and the DU shield.

- The test results showed no unintentional openings in the welded shell body to allow the polyurethane foam, filling the void between the DU shield and shell body, to fall away from the package in a thermal test. The polyurethane foam provides thermal insulation and blocks air flow around the shield protecting it from oxidizing during the thermal test.

- The source assembly is intact, undamaged and secure in the shielded position.

- The rear plate assembly continues to secure the source assembly to the package in its shielded position. The securing components of the rear plate assembly consists

of the stainless steel rear plate, stainless steel lock slide, tungsten sleeve, stainless steel selector ring retainer, stainless steel nut & lock collars, four stainless steel ½-13 hex bolts, and one stainless steel 5/16-18 security screw.

5.4.2 Material Properties at Elevated Temperatures

- The melting temperature for all materials (depleted uranium, stainless steel, tungsten, and titanium) of the structure, rear plate assembly and source assembly is above the thermal test temperature of 800°C.

- The thermal expansion for all materials of the structure is less than the design clearance allowed for assembly.

- The stainless steel and titanium components of the structure, rear plate assembly and source assembly have about 30% and 60% of their room temperature strength at 800°C, respectively.

  The load condition for the thermal test is for the structure to support the static weight of the shield in suspension. The dynamic impact nature of the drop tests subjects the structure to a force over 100 times the static weight of the shield. This suggests the strength of the materials used in the structure would need to decrease by two orders of magnitude or to about 1% of their strength at room temperature. The 30-minute thermal test is not long enough for significant creep deformation to occur in the structure.

5.5 Alternate SENTRY Configuration Assessments

Based on the following assessments given for each SENTRY configuration below, the 30-foot free drop, puncture, and thermal tests do not need to be performed for any of these other SENTRY transport package configurations.

5.5.1 SENTRY 330 or 110 Projector - Standard Configurations

The standard configuration, without its plastic rib inserts, is identical to the special test configuration, test specimen TP180G, when TP180G was dropped with the handling ribs attached. The plastic rib inserts act as covers for the handling rib mounting bolts and also help identify the package. The additional 11 pounds of weight added to the package by the inserts is accounted for in the adjusted drop height calculation. The additional weight would also be offset by the additional shock absorption provided by the inserts. The additional shock absorption would reduce the overall force transmitted to the package structure resulting in less or equal damage in the drop tests. The plastic rib inserts will have no adverse affect on the ability of the SENTRY transport package to meet the HAC test requirements.

The 30-foot free drop, puncture, and thermal tests do not need to be performed for any SENTRY transport package in the standard configuration because testing with the handling ribs did not cause radioactive material to be released and did not cause the external radiation dose rate to exceed 10-mSv/h (1-rem/h) at 1 m (40 in) from the external surface of the package.

5.5.2 SENTRY 330 or 110 Projector - Alternate Configurations

The alternate configuration uses a nut ring feature in place of the rivet nuts of the tested basic configurations. The test results show the rivet nuts and the mating rear plate attachment bolts were not affected in any of the NCT and HAC tests. Both the nut ring and the rivet nuts are captured behind the mounting plate and both are made from an austenitic stainless steel. However, the nut ring is structurally stronger than the rivet nuts because it is 0.23 inches thicker than the rivet nut thread engagement length. The use of the nut ring in place of the rivet nuts will allow the SENTRY transport package to perform as good or better in the NCT and HAC testing.

Therefore, the 30-foot free drop, puncture, and thermal tests do not need to be performed on the SENTRY transport package in the alternate configuration because test results showed no damage to the rivet nuts or rear plate attachment bolts. Any of the HAC tests with the nut ring in place of the rivet nuts will show a transport package with the nut ring does not cause radioactive material to be released and does not cause the external radiation dose rate to exceed 10-mSv/h (1-rem/h) at 1 m (40 in) from the external surface of the package.

5.5.3 SENTRY Source Changer – Basic or Standard Configurations

There are a few subtle differences between the tested projector transport package and source changer version of the transport package. The differences between the two versions are addressed below. Also addressed is the ability of the source changer version to meet the HAC test requirements.

The Tested (Projector) Transport Package

The tested transport package is the projector version and it is designed with only one rear plate assembly to secure the source wire in its fully shielded position within the package. The source wire is loaded into the package by pulling it in from the rear port with the source connector end entering first through the front plate port. The lock sleeve in the rear plate assembly stops the ball feature of the source connector preventing it from exiting the rear plate assembly unless the attachment bolts are removed. Once the source wire is pulled completely into the package, the lock slide actuates and engages the source connector towards the capsule end preventing it from exiting out the front port of the package.

The Source Changer Transport package

The source changer version of the transport package is designed with two rear plate assemblies to secure up to two source wires in their fully shielded positions within the package. The source wires are loaded into the package by pushing the source wire with the capsule end entering first through the rear plate port. A partition located at the center of the source changer shield stops the capsule from exiting out the other rear plate assembly port. Once the source wire is completely pushed into the package, a pair of spring-loaded, fork shaped, lock pins engage the helical wrap of the source wire preventing the source wire from exiting out the rear plate port unless the attachment bolts are removed. This functionality is available at both ends of the package.

Source Changer Design Differences Assessment

The center shield partition of the source changer version provides substantial protection in preventing the source from exiting out of the projector in one direction. The center partition is securely crimped in the source tube and proof tested after assembly with a 50 lbs. force acting in the axial direction of the tube. The flexible source wire would bunch up if compressed and would not be able to generate enough force to overcome the strength of the center partition crimp in an accident condition.

The only failure mode left is the potential exit of the source wire assembly back out through the rear plate port. The test results show minor damage to the rear plate assembly on only one test specimen, TP180B. The damage to the rear plate of TP180B caused the lock slide to bind because the lock slide extends out beyond the selector ring providing an opportunity for it to bend as the rear plate deforms.

The fork shaped lock pins of the source changer transport package are made of hardened tool steel and do not extend out beyond the selector ring. They are well protected within the thick austenitic stainless steel selector ring and selector ring retainer.

The 30-foot free drop, puncture, and thermal tests do not need to be performed for the source changer configuration because the subtle feature differences of the rear plate assembly and shield would not cause radioactive material to be released, not cause the external radiation dose rate to exceed 10-mSv/h (1-rem/h) at 1 m (40 in) from the external surface of the package, and would not adversely affect the ability of the transport package to meet the NCT and HAC test requirements.

Section 6 Final Test Assessment

The SENTRY transport package did not lose or disperse radioactive material and did not have external radiation dose rates exceeding 10-mSv/h (1-rem/h) at 1 m (40 in) from the external surface of the package after being subjected to the HAC test sequence identified in 10 CFR Part 71.

The results and assessments in this report confirm the SENTRY transport package in any of its described configurations meet the hypothetical accident conditions test requirements of test plan 180, 10 CFR Part 71, and IAEA TS-R-1 1996.

Appendix A: Radiation Profile Results

TP180A Radiation Profile Inspection

Initial Build Profile Results

QSA GLOBAL

SHIELDING PROFILE AND INSPECTION FORM
(SPIF)
F-Q-1806-2

Sheet 1 of 1

Shield Data

Model: 86010-330	Serial # TP180A	Radionuclide: Co-60	Max. Capacity 330 Ci
Shield P/N: 86001-330	Shield Heat # C586-A06		Lot # 09/4/100302

Profile Process Data

Source Model: 424-13	Source Ser. # 835/278	Radionuclide: Co-60	Activity: 324-1 Ci
Survey Inst. E600	Serial # 1863	Date Cal. 2/24/09	Date Due: 2/24/10
Inst. Probe: SHP270	Serial # 00542	Capacity Correction Factor: 1.02	

Location	Measured Dose Rate mR/hr: At Surface	Surface Corr. Factor	At 30 Cm [Note 2]	At one Meter	Adjusted Dose Rate mR/hr: At Surface	At 30 Cm [Note 2]	At one Meter [Note 1]
Top	15	1.09	NA	.5	17	NA	.5
Right	55	1.06		1.1	60		1.1
Front	35	1.06		1.0	38		1.0
Left	45	1.06		1.2	49		1.2
Rear	30	1.06		1.3	32		1.3
Bottom	25	1.09		1.0	28		1.0
Acceptance Criteria:					<200	NA	≤ 5.0
Result: (Check one)				Accept	✓	Reject	

Inspector: [signature] Date: 5/22/09 NCR # _____

Comments:
Truck overload.

Notes:
1. Refer to F-Q-1806-1, Shield Efficiency Testing Surface Correction Factors for an existing device model, or F-Q-1806-3, Shield Profile Worksheet for One meter acceptance limit.
2. The 30cm readings are only required when specifically requested.
3. Additional sheets may be used to describe results or indicate reading locations using sketches. Number all sheets and indicate total number of sheets. Make sure shield identification is included on each sheet.
4. Consult instrument calibration records for instrument uncertainty.

F-Q-1806-2, rev. 3 Page 1 of 1 9 March 2009

Post Test Profile Results

QSA GLOBAL

SHIELDING PROFILE AND INSPECTION FORM
(SPIF)
F-Q-1806-2

Sheet 1 of 1

Shield Data

Model: Sentry P330	Serial # TP180A	Radionuclide: Co 60	Max. Capacity 330 Ci
Shield P/N: 86001-330	Shield Heat # C586-A06		Lot # 09/4/100302

Profile Process Data

Source Model: 424-13	Source Ser. # 277468	Radionuclide: Co-60	Activity: 196.8 Ci
Survey Inst. 1 E600	Serial # 1863	Date Cal. 2/24/10	Date Due: 2/24/11
Survey Inst. 2 NA	Serial # NA	Date Cal. NA	Date Due: NA
Inst. Probe: 1 HP270	Serial # 00542	Inst. Probe: 2 NA	Serial # NA
Capacity Correction Factor: 1.68			

Location	Measured Dose Rate mR/hr: At Surface	Surface Corr. Factor	At 30 Cm [Note 2]	At One Meter	Adjusted Dose Rate mR/hr: At Surface	At 30 Cm [Note 2]	At One Meter [Note 1]
Top	17	1.09	NA	2	31	NA	.3
Right	36	1.06		.6	64		1.0
Front	18	1.06		.5	32		.8
Left	16	1.06		.5	29		.8
Rear	12	1.06		.5	21		.8
Bottom	13	1.09		.3	24		.5
Acceptance Criteria:					<200	NA	≤ 5.0
Result: (Check one)				Accept	✓	Reject	

Inspector: [signature] Date: 3/11/10 NCR # _____

Comments:
All but bottom & rear Readings are less background of .03 mR/hr
Bottom & rear Reading is less background of .30 mR/hr
"Post HAC Test Results"

Notes:
1. Refer to F-Q-1806-1, Shield Efficiency Testing Surface Correction Factors for an existing device model, or F-Q-1806-3, Shield Profile Worksheet for One meter acceptance limit.
2. The 30cm readings are only required when specifically requested.
3. Additional sheets may be used to describe results or indicate reading locations using sketches. Number all sheets and indicate total number of sheets. Make sure shield identification is included on each sheet.
4. Attach auto profiler print out to this sheet if used.

F-Q-1806-2, rev. 4 Page 1 of 1 27 January 2010

TP180B Radiation Profile Inspection

Initial Build Profile Results

QSA GLOBAL

SHIELDING PROFILE AND INSPECTION FORM
(SPIF)
F-Q-1806-2

Sheet 1 of 1

Shield Data

Model: Sentry 330	Serial # TP180B	Radionuclide: Co-60	Max. Capacity 330 Ci
Shield P/N: 86001-330	Shield Heat # C613-A06		Lot # 0920501008

Profile Process Data

Source Model: 424-13	Source Ser. # 277478	Radionuclide: Co-60	Activity: 312.1 Ci
Survey Inst. E600	Serial # 1863	Date Cal. 2/24/09	Date Due: 2/24/10
Inst. Probe: HP.270	Serial # 00542	Capacity Correction Factor: 1.06	

Location	Measured Dose Rate mR/hr: At Surface	Surface Corr. Factor	At 30 Cm [Note 2]	At one Meter	Adjusted Dose Rate mR/hr: At Surface	At 30 Cm [Note 2]	At one Meter [Note 3]
Top	19	1.09	NA	.4	22	NA	.4
Right	50	1.06		.9	56		1.0
Front	25	1.06		.8	28		.9
Left	40	1.06		.9	45		1.0
Rear	50	1.06		1.2	56		1.3
Bottom	25	1.09		.4	29		.4
Acceptance Criteria:					<200	NA	≤ 5.0
Result: (Check one)					Accept ✓	Reject	≤ 1.0

8/27/09

Inspector: [signature] Date: 8/8/09 NCR # _____

Comments: Inside Reading are less background of .2 mr/hr

Notes:
1. Refer to F-Q-1806-1, Shield Efficiency Testing Surface Correction Factors for an existing device model, or F-Q-1806-3, Shield Profile Worksheet for One meter acceptance limit
2. The 30cm readings are only required when specifically requested.
3. Additional sheets may be used to describe results or indicate reading locations using sketches. Number all sheets and indicate total number of sheets. Make sure shield identification is included on each sheet.
4. Consult instrument calibration records for instrument uncertainty.

F-Q-1806-2, rev. 3 Page 1 of 1 9 March 2009

Post Test Profile Results

QSA GLOBAL

SHIELDING PROFILE AND INSPECTION FORM
(SPIF)
F-Q-1806-2

Sheet 1 of 1

Shield Data

Model: Sentry 330	Serial # T180B	Radionuclide: Co 60	Max. Capacity 330 Ci
Shield P/N: 86001-330	Shield Heat # C613-A06		Lot # 0920501008

Profile Process Data

Source Model: 424-13	Source Ser. # 277478	Radionuclide: Co 60	Activity: 195.6 Ci
Survey Inst. 1 E600	Serial # 1863	Date Cal. 2/24/10	Date Due: 2/24/11
Survey Inst. 2 NA	Serial # NA	Date Cal. NA	Date Due: NA
Inst. Probe: 1 HP.270	Serial # 00542	Inst. Probe: 2 NA	Serial # NA
Capacity Correction Factor: 1.09			

Location	Measured Dose Rate mR/hr: At Surface	Surface Corr. Factor	At 30 Cm [Note 2]	At One Meter	Adjusted Dose Rate mR/hr: At Surface	At 30 Cm [Note 2]	At One Meter [Note 3]
Top	14	1.09	NA	.32	26	NA	.54
Right	18	1.06		.50	32		.85
Front	34	1.06		.62	61		1.1
Left	33	1.06		.63	59		1.0 1.1
Rear	13	1.06		.51	23		.96
Bottom	19	1.09		.20	35		.34
Acceptance Criteria:					<200	NA	≤ 5.0
Result: (Check one)					Accept ✓	Reject	

Inspector: [signature] Date: 3/29/10 NCR # _____

Comments: All but bottom 1 meter readings are less background .06
Bottom 1 meter reading is to be background .3

Notes:
1. Refer to F-Q-1806-1, Shield Efficiency Testing Surface Correction Factors for an existing device model, or F-Q-1806-3, Shield Profile Worksheet for One meter acceptance limit.
2. The 30cm readings are only required when specifically requested.
3. Additional sheets may be used to describe results or indicate reading locations using sketches. Number all sheets and indicate total number of sheets. Make sure shield identification is included on each sheet.
4. Attach auto profiler print-out to this sheet if used.

F-Q-1806-2, rev. 4 Page 1 of 1 27 January 2010

TP180C Radiation Profile Inspection

Initial Build Profile Results

QSA GLOBAL

SHIELDING PROFILE AND INSPECTION FORM (SPIF)
F-Q-1806-2

"Engineering Test Sample" Sheet 1 of 1

Shield Data

Model: Sentry 330	Serial # TP180C	Radionuclide: Co-60	Max. Capacity 330 Ci
Shield P/N: 86001-330	Shield Heat # C601-A06		Lot # 0916301210

Profile Process Data

Source Model: 424-13	Source Ser. # 27746B	Radionuclide: Co-60	Activity: 312.8 Ci
Survey Inst. E600	Serial # 1863	Date Cal. 2/24/09	Date Due: 2/24/10
Inst. Probe: HP-270	Serial # 00542	Capacity Correction Factor: 1.06	

Location	Measured Dose Rate mR/hr: At Surface	Surface Corr. Factor	At 30 Cm [Note 2]	At one Meter	Adjusted Dose Rate mR/hr: At Surface	At 30 Cm [Note 2]	At one Meter [Note 3]
Top	17	1.08	NA	.56	20	NA	.59
Right	55	1.36		.96	62		1.02
Front	27	1.06		1.30	30		1.38
Left	55	1.06		1.43	62		1.52
Rear	30	1.06		1.45	34		1.54
Bottom	32	1.08		.74	37		.78
Acceptance Criteria:					≤200	NA	≤ 105.0 8/10/10
Result: (Check one)					Accept ✓		Reject

Inspector: [signature] Date: 8/5/08 NCR # _____

Comments:
All Readings are Less Background of .04 mR/h
(1 meter Readings taken with E600, SN 2750, cal 2AUG 09, due 2AUG10 due to its 30 Sec Scaler capability.)

Notes:
1. Refer to F-Q-1806-1, Shield Efficiency Testing Surface Correction Factors for an existing device model, or F-Q-1806-3, Shield Profile Worksheet for One meter acceptance limit.
2. The 30cm readings are only required when specifically requested.
3. Additional sheets may be used to describe results or indicate reading locations using sketches. Number all sheets and indicate total number of sheets. Make sure shield identification is included on each sheet.
4. Consult instrument calibration records for instrument uncertainty.

F-Q-1806-2, rev. 3 Page 1 of 1 9 March 2009

Post Test Profile Results

QSA GLOBAL

SHIELDING PROFILE AND INSPECTION FORM (SPIF)
F-Q-1806-2

Sheet 1 of 1

Shield Data

Model: Sentry 330	Serial # TP180C	Radionuclide: Co-60	Max. Capacity 330 Ci
Shield P/N: 86001-330	Shield Heat # C601-A06		Lot # 0916301210

Profile Process Data

Source Model: 424-13	Source Ser. # 27746B	Radionuclide: Co 60	Activity: 196.2 Ci
Survey Inst. 1 E600	Serial # 1863	Date Cal. 2/24/10	Date Due: 2/24/11
Survey Inst. 2 NA	Serial # NA	Date Cal. NA	Date Due: NA
Inst. Probe: 1 HP-270	Serial # 00542	Inst. Probe: 2 NA	Serial # NA
Capacity Correction Factor: 1.68			

Location	Measured Dose Rate mR/hr: At Surface	Surface Corr. Factor	At 30 Cm [Note 2]	At One Meter	Adjusted Dose Rate mR/hr: At Surface	At 30 Cm [Note 2]	At One Meter [Note 3]
Top	14	1.05	NA	.28	26	NA	.47
Right	23	1.06		.44	41		.74
Front	30	1.06		.44	53		.74
Left	40	1.06		.74	71		1.28
Rear	17	1.06		.56	30		.95
Bottom	21	1.08		.46	39		.78
Acceptance Criteria:					≤200	NA	≤ 5.0
Result: (Check one)					Accept ✓		Reject

Inspector: [signature] Date: 3/23/10 NCR # _____

Comments:
All but Bottom meter Readings are less background of .06 mR/hr
Bottom meter Readings are less background of .32 mR/hr
1 meter performed on 3/23/10, activity is 195.9, CCF = 1.68

Notes:
1. Refer to F-Q-1806-1, Shield Efficiency Testing Surface Correction Factors for an existing device model, or F-Q-1806-3, Shield Profile Worksheet for One meter acceptance limit.
2. The 30cm readings are only required when specifically requested.
3. Additional sheets may be used to describe results or indicate reading locations using sketches. Number all sheets and indicate total number of sheets. Make sure shield identification is included on each sheet.
4. Attach any profiler print out to this sheet if used.

F-Q-1806-2, rev. 4 Page 1 of 1 27 January 2010

TP180E Radiation Profile Inspection

Initial Build Profile Results

QSA GLOBAL

SHIELDING PROFILE AND INSPECTION FORM
(SPIF)
F-Q-1806-2

Sheet 1 of 1

Shield Data

Model: 88010-330	Serial # TP180E	Radionuclide: Co 60	Max. Capacity 330 Ci
Shield P/N: 86001-330	Shield Heat # C611-A06		Lot # 0919700907

Profile Process Data

Source Model: 424-13	Source Ser. # 277478	Radionuclide: Co-60	Activity: 310.1 Ci
Survey Inst. E600	Serial # 1863	Date Cal. 2/24/09	Date Due: 2/24/10
Inst. Probe: HP270	Serial # 00642	Capacity Correction Factor: 1.06	

Location	Measured Dose Rate mR/hr: At Surface	Surface Corr. Factor	At 30 Cm [Note 2]	At one Meter	Adjusted Dose Rate mR/hr: At Surface	At 30 Cm [Note 2]	At one Meter [Note 1]
Top	20	1.09	NA	.40	23	NA	.42
Right	45	1.06		.81	51		.86
Front	31	1.04		.36	35		.38
Left	35	1.06		.88	39		.93
Rear	34	1.06		1.65	38		1.7
Bottom	25	1.09		.50	29		.53
Acceptance Criteria:					≤200	NA	≤ ~~1.0~~ 5.0
Result: (Check one)				Accept	✓	Reject	

Inspector: [signature] Date: 3/28/09 NCR #

Comments:
If all one (1) meter Readings are less background of .05

Notes:
1. Refer to F-Q-1806-1, Shield Efficiency Testing Surface Correction Factors for an existing device model, or F-Q-1806-3, Shield Profile Worksheet for One meter acceptance limit
2. The 30cm readings are only required when specifically requested.
3. Additional sheets may be used to describe results or indicate reading locations using sketches. Number all sheets and indicate total number of sheets. Make sure shield identification is included on each sheet.
4. Consult instrument calibration records for instrument uncertainty.

F-Q-1806-2, rev. 3 Page 1 of 1 9 March 2009

Post Test Profile Results

QSA GLOBAL

SHIELDING PROFILE AND INSPECTION FORM
(SPIF)
F-Q-1806-2

Sheet 1 of 1

Shield Data

Model: Sentry 330	Serial # TP180E	Radionuclide: Co-60	Max. Capacity 330 Ci
Shield P/N: 86001-330	Shield Heat # C611-A06		Lot # 0919700907

Profile Process Data

Source Model: 424-13	Source Ser. # 277468	Radionuclide: Co-60	Activity: 196.6 Ci
Survey Inst. 1 E600	Serial # 1863	Date Cal. 2/24/10	Date Due: 2/24/11
Survey Inst. 2 NA	Serial # NA	Date Cal. NA	Date Due: NA
Inst. Probe: 1 HP270	Serial # 00542	Inst. Probe: 2 NA	Serial # NA
Capacity Correction Factor: 1.68			

Location	Measured Dose Rate mR/hr: At Surface	Surface Corr. Factor	At 30 Cm [Note 2]	At One Meter	Adjusted Dose Rate mR/hr: At Surface	At 30 Cm [Note 2]	At One Meter [Note 1]
Top	13	1.09	NA	.3	24	NA	.5
Right	16	1.06		.6	29		1.0
Front	19	1.06		.7	34		1.2
Left	22	1.06		.6	39		1.0
Rear	13	1.06		.5	23		.8
Bottom	14	1.09		.3	26		.5
Acceptance Criteria:					<200	NA	≤ 5.0
Result: (Check one)				Accept	✓	Reject	

Inspector: [signature] Date: 3/16/10 NCR #

Comments:
All and bottom 1 meter Readings are less background of .03 mR/hr
Bottom 1 meter Reading is Less .18 background

Notes:
1. Refer to F-Q-1806-1, Shield Efficiency Testing Surface Correction Factors for an existing device model, or F-Q-1806-3, Shield Profile Worksheet for One meter acceptance limit.
2. The 30cm readings are only required when specifically requested.
3. Additional sheets may be used to describe results or indicate reading locations using sketches. Number all sheets and indicate total number of sheets. Make sure shield identification is included on each sheet.
4. Attach auto profiler print out to this sheet if used.

F-Q-1806-2, rev. 4 Page 1 of 1 27 January 2010

TP180G Radiation Profile Inspection

Initial Build Profile Results

QSA GLOBAL

SHIELDING PROFILE AND INSPECTION FORM (SPIF) F-Q-1806-2

Sheet 1 of 1

Shield Data			
Model: 86010-330	Serial # TP180G	Radionuclide: Co 60	Max. Capacity 330 Ci
Shield P/N: 86001-330	Shield Heat # C615-A06		Lot # 0922200219

Profile Process Data			
Source Model: 424-13	Source Ser. # 277478	Radionuclide: Co-60	Activity: 309.4 Ci
Survey Inst. E600	Serial # 1863	Date Cal. 8/27/09	Date Due: 8/27/10
Inst. Probe: HP270	Serial # 00542	Capacity Correction Factor: 1.07	

Location	Measured Dose Rate mR/hr: At Surface	Surface Corr. Factor	At 30 Cm [Note 2]	At one Meter	Adjusted Dose Rate mR/hr: At Surface	At 30 Cm [Note 2]	At one Meter [Note 1]
Top	20	1.09	NA	.4	23	NA	.4
Right	45	1.06		.9	51		1.0
Front	41	1.06		1.0	47		1.0
Left	42	1.06		1.0	48		1.1
Rear	47	1.06		1.6	53		1.7
Bottom	25	1.09		.3	29		.3
			Acceptance Criteria:		≤200	NA	≤ 5.0
			Result: (Check one)	Accept ✓		Reject	

Inspector: [signature] Date: 9/3/09 NCR # _____

Comments:
All 1 meter readings are less background of 0.1

Notes:
1. Refer to F-Q-1806-1, Shield Efficiency Testing Surface Correction Factors for an existing device model, or F-Q-1806-3, Shield Profile Worksheet forOne meter acceptance limit
2. The 30cm readings are only required when specifically required.
3. Additional sheets may be used to describe results or indicate reading locations using sketches. Number all sheets and indicate total number of sheets. Make sure shield identification is included on each sheet.
4. Consult instrument calibrationrecords for instrument uncertainty.

F-Q-1806-2, rev. 3 Page 1 of 1 9 March 2009

Post Test Profile Results

QSA GLOBAL

SHIELDING PROFILE AND INSPECTION FORM (SPIF) F-Q-1806-2

Sheet 1 of 1

Shield Data			
Model: Sentry 330	Serial # TP180G	Radionuclide: Co 60	Max. Capacity 330 Ci
Shield P/N: 86001-330	Shield Heat # C615-A06		Lot # 0922200819

Profile Process Data			
Source Model: 424-13	Source Ser. # 277478	Radionuclide: Co 60	Activity: 195.8 Ci
Survey Inst. 1 E600	Serial # 1863	Date Cal. 8/24/10	Date Due: 8/24/11
Survey Inst. 2 ND500P	Serial # 42363	Date Cal. 8/18/05	Date Due: 8/18/10
Inst. Probe: 1 HP270	Serial # 00542	Inst. Probe: 2 101-03	Serial # P11973
Capacity Correction Factor: 1.69			

Location	Measured Dose Rate mR/hr: At Surface	Surface Corr. Factor	At 30 Cm [Note 2]	At One Meter	Adjusted Dose Rate mR/hr: At Surface	At 30 Cm [Note 2]	At One Meter [Note 1]
Top	.15	1.03	NA	.32	28	NA	.54
Right	.23	1.06		.42	41		.71
Front *	300	1.05		1.3	532		2.20
Left	.28	1.06		.43	50		1.7
Rear	.14	1.06		.48	25		.81
Bottom	.13	1.05		.39	42		.66
			Acceptance Criteria:		≤200	NA	≤ 5.0
			Result: (Check one)	Accept		Reject	

Inspector: [signature] Date: 3/24/10 NCR # _____

Comments: All but bottom 1 meter Reading is one less background of .04 mR/hr
Bottom 1 meter Reading is last background of .06
* measured with ND500P with front port open position
(NO OUTLET PORT SHIELD)

Notes:
1. Refer to F-Q-1806-1, Shield Efficiency Testing Surface Correction Factors for an existing device model, or F-Q-1806-3, Shield Profile Worksheet forOne meter acceptance limit
2. The 30cm readings are only required when specifically requested.
3. Additional sheets may be used to describe results or indicate reading locations using sketches. Number all sheets and indicate total number of sheets. Make sure shield identification is included on each sheet.
4. Attach auto profiler print out to this sheet if used.

F-Q-1806-2, rev. 4 Page 1 of 1 27 January 2010

Appendix B: Adjusted Drop Height Worksheet

SENTRY Test Plan 180 Adjusted Drop Height Worksheet

Test Specimen	Config.	Actual Test Specimen Weight (Lbs)	Adjusted Drop Heights (*1)					
			4-Foot Free Drop Height		30-Foot Free Drop Height		40-Inch Puncture Drop Height	
			Feet	Inches	Feet	Inches	Feet	Inches
TP180A	Basic	655	4.3	51.3	32.1	384.7	3.6	42.7
TP180B	Basic	656	4.3	51.2	32.0	384.1	3.6	42.7
TP180C	Basic	652	4.3	51.5	32.2	386.5	3.6	42.9
TP180D	Basic	657	4.3	51.1	32.0	383.6	3.6	42.6
TP180E	Basic	659	4.2	51.0	31.9	382.4	3.5	42.5
TP180F	Standard	743	4.2	45.2	31.5	377.9	3.5	42.0
TP180G	Standard	728	4.3	46.2	32.1	385.7	3.6	42.9
TP180H	Basic	664	4.2	50.6	31.6	379.5	3.5	42.2
TP180J	Changer	TBD						

SENTRY Transport Package Maximum Energy Determination

Assembly Number	Config.	Maximum Weight (*2) (Lbs)	Maximum Energy (*3) at		
			4 Feet (Lbs-Ft)	30 Feet (Lbs-Ft)	40 Inches (Lbs-Ft)
86015-330	Basic	700	2800	21000	2333
86000-330	Standard	780	3120	23400	2600
86015-110	Basic	500	2000	15000	1667
86000-110	Standard	580	2320	17400	1933

(*1) Adjusted drop heights (Feet) = Maximum Energy (Lbs-Ft) / Actual Test Specimen Weight (Lbs)
(*2) Maximum weight for the Basic configurations is without the 80 pound rib structure.
(*3) Maximum Energy = Maximum Weight (Lbs) X Drop Height (Ft)

APPROVALS

Originator: S. Gan 25 Feb 2010

Engineering: [illegible] 25 Feb 10

Regulatory: [illegible] 25 Feb 10

Quality Assurance: C. [illegible] 25 Feb 2010

Appendix C: Test Data Worksheets

See Attached.

Appendix D: Test Specimen Manufacturing Records

See Attached.

Appendix E: Test Specimen Inspection Records

See Attached.

Appendix F: Test & Measurement Calibration Records

See Attached.

Free Drop & Puncture Test Checklist

Test:	**30-Foot Free Drop Test**	
Test Location:	**QSA Global Burlington MA**	
Step	**Data**	
1. Record test specimen serial number:	TP 180 A	
2. Record the test specimen weight:	655 LBS.	
3. Record the ambient temperature:	53°F	Instrument S/N: ENG-20
4. Identify set-up orientation figure:	ORIENTATION #1, HIT ON REAR ACCESS PORT	
5. Record drop height.	32.2 FEET	USED T10761-32.2 S/N: TP180-2
6. Photograph set-up in at least two perpendicular planes. ✓		
7. Begin video recording of the test so that impact is recorded. ✓		
8. Release the test specimen. ✓		
9. Stop the video recorder. Ensure the point of impact and orientation specified in the plan has been achieved.		
10. Record the damage to the test specimen. Use a separate sheet and attach, if needed. · REAR ACCESS PORT BENT IN TOWARDS CENTER OF PORT. · EDGE OF WELDED BODY DENTED NEAR REAR ACCESS PORT. · ATTEMPT TO RE-HIT PORT SQUARELY – DROP SAME TEST SPECIMEN AGAIN.		
11. Engineering, Regulatory Affairs and Quality Assurance makes a preliminary assessment relative to 10 CFR 71. If needed, record the assessment on a separate sheet and attach. ☒ **Preliminary assessment indicates test specimen meets the 30-foot drop test requirements of 10 CFR Part 71.** ☐ **Preliminary assessment indicates test specimen does not meet the 30-foot drop test requirements of 10 CFR Part 71.**		
Test witnessed by (Signature)	**Print Name**	**Date**
Engineering: S. Grenier	S. GRENIER	2 MAR 10
Regulatory Affairs: [illegible]	L Pedrick	1 APR 10
Quality Assurance: C. Roughan	C Roughan	7 Apr 10

Free Drop & Puncture Test Data Sheet

Test Unit Model/Serial No.: TP180A	Test: 30-FOOT FREE DROP
Test Date: 2 MAR 10	Test Time: 10:42 AM

Describe drop orientation and drop height:
ORIENTATION #1. HIT ON REAR ACCESS PORT.
DROP HEIGHT IS 32.2 FEET AS INDICATED USING T1076I-32.2

Describe impact (location, rotation, etc.):
IMPACT ON REAR ACCESS PORT.
SLIGHT ROTATION TOWARDS EDGE OF CYLINDER BODY

Describe on-site inspection (damage, broken parts, etc.):
REAR ACCESS PORT BENT IN TOWARDS DUST COVER.
EDGE OF WELDED BODY HAS A SMALL 6-INCH LONG DENT.

On-site test assessment:

- Was the test performed in accordance with 10 CFR 71, IAEA TS-R-1 1996, and this test plan? **Yes or No.** Although DROP SPECIMEN AGAIN TO HIT PORT SQUARELY.
- Does the test specimen meet the requirements of 10 CFR 71 and IAEA TS-R-1 1996 for this test? **Yes or No.**
- Any changes to subsequent drop orientations needed to achieve maximum damage? Especially for the SENTRY 330 Standard, SENTRY 330 Special, and SENTRY Source Changer configurations. **Yes or No.** If yes, then identify and justify.
- Did sufficient damage occur at or on the rear-plate attachment area to warrant further drop testing the SENTRY 110 Projector – Basic configuration because of its thinner rear-plate? **Yes or No.**
- Should testing continue with this test specimen? **Yes or No.** If yes, next test: 30-FOOT AGAIN.
- Will the test specimen pass the thermal test based on the accumulated damage assessment? **Yes or No**

Engineering: 2MAR10 **Regulatory:** 1 Apr 10 **QA:** C. Reyes 7 Apr 10

Describe any post-test disassembly and inspection:
SEE PUNCTURE TEST DATA SHEET

Describe any change in source position (if possible):
NO CHANGE IN SOURCE LOCATION

Describe results of radiography (if performed):
NOT PERFORMED.

Completed by: S. Grant	Date: 3 MAR 10

Free Drop & Puncture Test Checklist

Test:	**30-Foot Free Drop Test**		
Test Location:	**QSA Global Burlington MA**		
Step		**Data**	
1. Record test specimen serial number:		TP180A (2ND DROP)	
2. Record the test specimen weight:		655 LBS.	
3. Record the ambient temperature:		54 °F	Instrument S/N: ENG-20
4. Identify set-up orientation figure:		ORIENTATION #1 HIT ON REAR ACCESS PORT	
5. Record drop height.		32.2 FEET	USED T10761-32.2 S/N: TP180-5
6. Photograph set-up in at least two perpendicular planes. ✓			
7. Begin video recording of the test so that impact is recorded. ✓			
8. Release the test specimen. ✓			
9. Stop the video recorder. Ensure the point of impact and orientation specified in the plan has been achieved.			
10. Record the damage to the test specimen. Use a separate sheet and attach, if needed. • REAR ACCESS PORT CRUSHED INTO ACCESS PORT AREA. • DUST COVER FRACTURED • EDGE OF WELDED BODY DENT SLIGHTY LARGER (8-INCHES LONG)			
11. Engineering, Regulatory Affairs and Quality Assurance makes a preliminary assessment relative to 10 CFR 71. If needed, record the assessment on a separate sheet and attach. ☒ **Preliminary assessment indicates test specimen meets the 30-foot drop test requirements of 10 CFR Part 71.** ☐ **Preliminary assessment indicates test specimen does not meet the 30-foot drop test requirements of 10 CFR Part 71.**			
Test witnessed by (Signature)		**Print Name**	**Date**
Engineering: S. Grenier		S. GRENIER	2 MAR 10
Regulatory Affairs: L. Poirier		L. Poirier	1 Apr 10
Quality Assurance: C. Roughan		C Roughan	7 Apr 10

Free Drop & Puncture Test Data Sheet

Test Unit Model/Serial No.: TP180A	Test: 30-FOOT FREE DROP (2ND)
Test Date: 2 MAR 10	Test Time: 11:16 AM

Describe drop orientation and drop height:
ORIENTATION #1. HIT ON REAR ACCESS PORT
DROP HEIGHT IS 32.2 FEET INDICATED BY T10761-32.2

Describe impact (location, rotation, etc.):
IMPACT ON REAR ACCESS PORT
VERY MINOR ROTATION TOWARDS CYLINDER BODY EDGE. (HIT MORE SQUARELY ON CONT)

Describe on-site inspection (damage, broken parts, etc.):
REAR ACCESS PORT PUCKERED AND PLASTIC DUST COVER FRACTURED.
EDGE OF WELDED BODY DENT IS NOW 8-INCHES LONG.

On-site test assessment:

- Was the test performed in accordance with 10 CFR 71, IAEA TS-R-1 1996, and this test plan? **Yes or No.**
- Does the test specimen meet the requirements of 10 CFR 71 and IAEA TS-R-1 1996 for this test? **Yes or No.**
- Any changes to subsequent drop orientations needed to achieve maximum damage? Especially for the SENTRY 330 Standard, SENTRY 330 Special, and SENTRY Source Changer configurations. **Yes or No.** If yes, then identify and justify.
- Did sufficient damage occur at or on the rear-plate attachment area to warrant further drop testing the SENTRY 110 Projector – Basic configuration because of its thinner rear-plate? **Yes or No.**
- Should testing continue with this test specimen? **Yes or No.** If yes, next test: PUNCTURE DROP
- Will the test specimen pass the thermal test based on the accumulated damage assessment? **Yes or No**

Engineering: 2MAR10 **Regulatory:** 1 APR 10 **QA:** 7 APR 10

Describe any post-test disassembly and inspection:
SEE PUNCTURE TEST DATA SHEET

Describe any change in source position (if possible):
SOURCE LOCATION DID NOT MOVE.

Describe results of radiography (if performed):
NOT PERFORMED.

Completed by: S. Gramm	Date: 3 MAR 10

Free Drop & Puncture Test Checklist

Test:	**Puncture Test**		
Test Location:	**QSA Global Burlington MA**		
Step		**Data**	
1. Record test specimen serial number:		TP180A	
2. Record the test specimen weight:		655 LBS.	
3. Record the ambient temperature:		42°F	Instrument S/N: ENG-20
4. Identify set-up orientation figure:		ORIENTATION #2 HIT ON DUST COVER AT AN ANGLE	
5. Record drop height.		3.6 FEET	USED T10761-3.6 S/N: TP180-12
6. Photograph set-up in at least two perpendicular planes.			
7. Begin video recording of the test so that impact is recorded.			
8. Release the test specimen.			
9. Stop the video recorder. Ensure the point of impact and orientation specified in the plan has been achieved.			
10. Record the damage to the test specimen. Use a separate sheet and attach, if needed. 1/3 OF PLASTIC DUST COVER TORN OFF. ADDITIONAL CRACKING TO DUST COVER REMAINING ON PACKAGE.			
11. Engineering, Regulatory Affairs and Quality Assurance makes a preliminary assessment relative to 10 CFR 71. If needed, record the assessment on a separate sheet and attach. ☒ **Preliminary assessment indicates test specimen meets the puncture test requirements of 10 CFR Part 71.** ☐ **Preliminary assessment indicates test specimen does not meet the puncture test requirements of 10 CFR Part 71.**			
Test witnessed by (Signature)		**Print Name**	**Date**
Engineering: S. Grenier		S. GRENIER	2 APR 10
Regulatory Affairs: L. Pidlak		L. Pidlak	1 Apr 10
Quality Assurance: C. Loughan		C Loughan	7 Apr 10

Free Drop & Puncture Test Data Sheet

Test Unit Model/Serial No.: TP180A	Test: **Puncture Test**
Test Date: 2 MAR 10	Test Time: 2:45PM

Describe drop orientation and drop height:
ORIENTATION # 2 - HIT ON DUST COVER AT AN ANGLE.
DROP HEIGHT IS 3.6 FEET INDICATED BY T10761-3.6

Describe impact (location, rotation, etc.):
IMPACT LOCATION ON DUST COVER AND LOCK COVER.
TEST SPECIMEN ROTATED OFF PUNCTURE BAR AFTER IMPACT.

Describe on-site inspection (damage, broken parts, etc.):
PLASTIC DUST COVER TORN AND CRACKED.

On-site test assessment:

- Was the test performed in accordance with 10 CFR 71, IAEA TS-R-1 1996, and this test plan? **Yes or No.**
- Does the test specimen meet the requirements of 10 CFR 71 and IAEA TS-R-1 1996 for this test? **Yes or No.**
- Any changes to subsequent drop orientations needed to achieve maximum damage? Especially for the SENTRY 330 Standard, SENTRY 330 Special, and SENTRY Source Changer configurations. **Yes or No.** If yes, then identify and justify.
- Did sufficient damage occur at or on the rear-plate attachment area to warrant further drop testing the SENTRY 110 Projector – Basic configuration because of its thinner rear-plate? **Yes or No.**
- Should testing continue with this test specimen? **Yes or No.** If yes, next test: _____
- Will the test specimen pass the thermal test based on the accumulated damage assessment? **Yes or No**

Engineering: 2 MAR 10 **Regulatory:** 1 Apr 10 **QA:** 7 Apr 10

Describe any post-test disassembly and inspection: ALL REAR PLATE HARDWARE INTACT.
CUT AWAY DUST COVER TO REMOVE REARPLATE. SHIELD SHIFTED TO REAR, STUBE GOOD.

Describe any change in source position (if possible): DUMMY SOURCE WIBE UNAFFECTED.
SOURCE LOCATION CHANGED 1/8 INCH TOWARDS FRONT PLATE END.

Describe results of radiography (if performed):
NOT PERFORMED.

Completed by: S. G	Date: 2 MAR 10

Test Inspection Data Sheet

Test Specimen Serial No.: TP180A	Last Test Performed: PUNCTURE TEST

Describe and measure (if appropriate) any damage or broken parts, etc.:

- REAR ACCESS PORT TUBE BENT AND BULGED TOWARDS CENTER
- LOCK COVER INTACT BUT PLUNGER LOCK BROKEN
- DUST COVER SPLIT AND BROKEN - PARTIALLY INTACT

Describe and measure (if appropriate) any signs of permanent strain or deformation:

- REAR ACCESS PORT DEFORMED (BENT) ABOUT 0.5 INCH INWARDS
- REAR ACCESS PORT BULGE ABOUT 0.5 INCH
- IMPACT DENT ABOUT 8 INCHES LONG ON END CORNER OF PACKAGE.

Describe the condition of the simulated source wire assembly.

NO VISIBLE SIGNS OF DAMAGE TO SIMULATED SOURCE ASSEMBLY.

Reassemble the package using a representative active source, making sure that the source position and the package configuration is the same as they were immediately after the last test.

Measure and record a radiation profile of each test specimen in accordance with QSA Global Work Instruction WI-Q-1806.

Compare the pre-test dose levels with post-test dose levels at the surface of the package and at 1 meter from the surface of the package.

ONLY A NEGLIGIBLE DIFFERENCE BETWEEN PRE AND POST DOSE LEVELS ON THE SURFACE AND 1 METER FROM SURFACE OF TESTED PACKAGE.

Is a radiograph required to inspect for hidden component damage or failure? If radiography is performed, describe any damage or failures found.

NOT PERFORMED.

Completed by: S. Gerrini	Date: 8 MAR 10

Free Drop & Puncture Test Checklist

Test:	**30-Foot Free Drop Test**		
Test Location:	**QSA Global Burlington MA**		
Step		**Data**	
1. Record test specimen serial number:		TP180 B	
2. Record the test specimen weight:		656 LBS.	
3. Record the ambient temperature:		47 °F	Instrument S/N: ENG-20
4. Identify set-up orientation figure:		ORIENTATION #2. HIT EDGE OF REAR ACCESS PORT.	
5. Record drop height.		32.2 FT USED T10761-32.2 S/N: TP180-8	
6. Photograph set-up in at least two perpendicular planes. ✓			
7. Begin video recording of the test so that impact is recorded. ✓			
8. Release the test specimen. ✓			
9. Stop the video recorder. Ensure the point of impact and orientation specified in the plan has been achieved. ✓			
10. Record the damage to the test specimen. Use a separate sheet and attach, if needed. PROTRUDING EDGE OF REAR ACCESS PORT COMPLETELY CRUSHED INTO ACCESS PORT AREA AND ONTO PLASTIC DUST COVER.			
11. Engineering, Regulatory Affairs and Quality Assurance makes a preliminary assessment relative to 10 CFR 71. If needed, record the assessment on a separate sheet and attach. ☒ **Preliminary assessment indicates test specimen meets the 30-foot drop test requirements of 10 CFR Part 71.** ☐ **Preliminary assessment indicates test specimen does not meet the 30-foot drop test requirements of 10 CFR Part 71.**			
Test witnessed by (Signature)		**Print Name**	**Date**
Engineering:	S. Grenier	S. GRENIER	2 MAR 10
Regulatory Affairs:	L. Podolak	L. Podolak	1 Apr 10
Quality Assurance:	C. Roughan	C. Roughan	7 Apr 10

Free Drop & Puncture Test Data Sheet

Test Unit Model/Serial No.: TP180B	Test: 30-FOOT FREE DROP
Test Date: 2 MAR 10	Test Time: 1:11 PM

Describe drop orientation and drop height:
ORIENTATION #2. HIT ONTO EDGE OF REAR ACCESS PORT.
DROP HEIGHT IS 32.2 FEET INDICATED BY T10761-32.2

Describe impact (location, rotation, etc.):
IMPACT ONTO EDGE OF REAR ACCESS PORT
NO ROTATION.

Describe on-site inspection (damage, broken parts, etc.):
ABOUT 2/3 OF REAR ACCESS PORT TUBE FLATTENED INTO THE ACCESS PORT AREA AND ONTO THE PLASTIC DUST COVER.

On-site test assessment:

- Was the test performed in accordance with 10 CFR 71, IAEA TS-R-1 1996, and this test plan? **Yes or No.**
- Does the test specimen meet the requirements of 10 CFR 71 and IAEA TS-R-1 1996 for this test? **Yes or No.**
- Any changes to subsequent drop orientations needed to achieve maximum damage? Especially for the SENTRY 330 Standard, SENTRY 330 Special, and SENTRY Source Changer configurations. **Yes or No.** If yes, then identify and justify.
- Did sufficient damage occur at or on the rear-plate attachment area to warrant further drop testing the SENTRY 110 Projector – Basic configuration because of its thinner rear-plate? **Yes or No.**
- Should testing continue with this test specimen? **Yes or No.** If yes, next test: PUNCTURE DROP
- Will the test specimen pass the thermal test based on the accumulated damage assessment? **Yes or No**

Engineering: 2MAR10 **Regulatory:** 1 Apr 10 **QA:** 7 Apr 10

Describe any post-test disassembly and inspection:
COULD NOT DISASSEMBLE WITHOUT CUTTING AWAY PORT TUBE BENT OVER ONTO REAR PLATE.

Describe any change in source position (if possible):
MOVED BY 1/16 INCH TOWARD FRONT. SEE SOURCE LOCATION DATA SHEET

Describe results of radiography (if performed):
NOT PERFORMED.

Completed by: S. Gomi	Date: 3 MAR 10

Free Drop & Puncture Test Checklist

Test:	**Puncture Test**		
Test Location:	**QSA Global Burlington MA**		
Step		**Data**	
1. Record test specimen serial number:		TP180B	
2. Record the test specimen weight:		656 LBS.	
3. Record the ambient temperature:		44°F	Instrument S/N: ENG-20
4. Identify set-up orientation figure:		ORIENTATION #2. HIT PLASTIC DUST COVER	
5. Record drop height.		3.6 FT	USED T10761-3.6 S/N: TP180-14
6. ✓ Photograph set-up in at least two perpendicular planes.			
7. ✓ Begin video recording of the test so that impact is recorded.			
8. ✓ Release the test specimen.			
9. ✓ Stop the video recorder. Ensure the point of impact and orientation specified in the plan has been achieved.			
10. Record the damage to the test specimen. Use a separate sheet and attach, if needed. NO DAMAGE FOUND			
11. Engineering, Regulatory Affairs and Quality Assurance makes a preliminary assessment relative to 10 CFR 71. If needed, record the assessment on a separate sheet and attach. ☑ **Preliminary assessment indicates test specimen meets the puncture test requirements of 10 CFR Part 71.** ☐ **Preliminary assessment indicates test specimen does not meet the puncture test requirements of 10 CFR Part 71.**			
Test witnessed by (Signature)		**Print Name**	**Date**
Engineering: S. Grenier		S. GRENIER	2 MAR 10
Regulatory Affairs: L. Podolak		L. Podolak	1 Apr 10
Quality Assurance: C. Loughran		C Loughran	7 Apr 10

Free Drop & Puncture Test Data Sheet

Test Unit Model/Serial No.: TP180B	Test: PUNCTURE TEST
Test Date: 2 MAR 10	Test Time: 2:22 PM

Describe drop orientation and drop height:
ORIENTATION #2 – HIT ON PLASTIC DUST COVER
DROP HEIGHT IS 3.6 FEET AS INDICATED BY T10761-3.6

Describe impact (location, rotation, etc.):
DIRECT HIT ON PLASTIC DUST COVER

Describe on-site inspection (damage, broken parts, etc.):
NO ADDITIONAL DAMAGE FOUND.

On-site test assessment:

- Was the test performed in accordance with 10 CFR 71, IAEA TS-R-1 1996, and this test plan? **Yes or No.**
- Does the test specimen meet the requirements of 10 CFR 71 and IAEA TS-R-1 1996 for this test? **Yes or No.**
- Any changes to subsequent drop orientations needed to achieve maximum damage? Especially for the SENTRY 330 Standard, SENTRY 330 Special, and SENTRY Source Changer configurations. **Yes or No** If yes, then identify and justify.
- Did sufficient damage occur at or on the rear-plate attachment area to warrant further drop testing the SENTRY 110 Projector – Basic configuration because of its thinner rear-plate? **Yes or No.**
- Should testing continue with this test specimen? **Yes or No.** If yes, next test: _____
- Will the test specimen pass the thermal test based on the accumulated damage assessment? **Yes or No**

Engineering: SD 2 MAR 10 **Regulatory:** [illegible] 1 Apr 10 **QA:** [illegible] 7 Apr 10

Describe any post-test disassembly and inspection: PLASTIC DUST COVER WEDGED IN PLACE, LOCK COVER PINS SHEARED OFF. REAR PLATE + BOLTS IN TACT. CANNOT UNLOCK.

Describe any change in source position (if possible):
Slight source location change

Describe results of radiography (if performed):
NOT PERFORMED.

Completed by: S. Gremi	Date: 3 MAR 10

Test Inspection Data Sheet

Test Specimen Serial No.: TP180B	Last Test Performed: PUNCTURE TEST

Describe and measure (if appropriate) any damage or broken parts, etc.:

ABOUT 1/3 OF REAR ACCESS PORT TUBE CRUSHED INTO THE DUST COVER ON THE REAR PLATE ASSEMBLY.

Describe and measure (if appropriate) any signs of permanent strain or deformation:

REAR ACCESS PORT TUBE FLATTENED AND CUTTING INTO DUST COVER.

Describe the condition of the simulated source wire assembly.

NO VISIBLE SIGNS OF DAMAGE TO SIMULATED SOURCE WIRE

Reassemble the package using a representative active source, making sure that the source position and the package configuration is the same as they were immediately after the last test.

Measure and record a radiation profile of each test specimen in accordance with QSA Global Work Instruction WI-Q-1806.

Compare the pre-test dose levels with post-test dose levels at the surface of the package and at 1 meter from the surface of the package.

A NEGLIGIBLE DIFFERENCE BETWEEN PRE AND POST DOSE LEVELS ON THE SURFACE AND 1 METER FROM SURFACE OF TESTED PACKAGE.

Is a radiograph required to inspect for hidden component damage or failure? If radiography is performed, describe any damage or failures found.

NOT PERFORMED.

Completed by: S. Gremi	Date: 8 MAR 10

Free Drop & Puncture Test Checklist

Test:	**30-Foot Free Drop Test**		
Test Location:	**QSA Global Burlington MA**		
Step		**Data**	
1. Record test specimen serial number:		TP180C	
2. Record the test specimen weight:		652 LBS.	
3. Record the ambient temperature:		47°F	Instrument S/N: ENG-20
4. Identify set-up orientation figure:		ORIENTATION #3 (BUT #4 HIT RESULT) HIT SIDE OF SHELL ON LONGITUDINAL SEAM.	
5. Record drop height.		32.2 FT USED T10761-32.2 S/N: TP180-3	
6. Photograph set-up in at least two perpendicular planes.			
7. Begin video recording of the test so that impact is recorded.			
8. Release the test specimen.			
9. Stop the video recorder. Ensure the point of impact and orientation specified in the plan has been achieved.			
10. Record the damage to the test specimen. Use a separate sheet and attach, if needed. THE EDGE SEAM AT THE LONGITUDINAL SEAM INTERSECTION IS COMPLETELY FLATTENED. THIS CREATES A BULGE ON THE BOTTOM ENDPLATE AND CYLINDER SURFACES. THIS IMPACT POINT WAS ORIGINALLY PLANNED FOR TEST SPECIMEN TP180D. THIS TEST SPECIMEN (TP180C) TO BE DROPPED AGAIN TO HIT LONGITUDINAL SEAM.			
11. Engineering, Regulatory Affairs and Quality Assurance makes a preliminary assessment relative to 10 CFR 71. If needed, record the assessment on a separate sheet and attach. ☒ **Preliminary assessment indicates test specimen meets the 30-foot drop test requirements of 10 CFR Part 71.** ☐ **Preliminary assessment indicates test specimen does not meet the 30-foot drop test requirements of 10 CFR Part 71.**			
Test witnessed by (Signature)		**Print Name**	**Date**
Engineering: S. Grenier		S. GRENIER	2MAR10
Regulatory Affairs: L. Pichlak		L. Pichlak	1 Apr 10
Quality Assurance: C. Roughan		C. Roughan	7 Apr 10

Free Drop & Puncture Test Data Sheet

Test Unit Model/Serial No.: TP180C	Test: 30-FOOT FREE DROP
Test Date: 2 MAR 10	Test Time: 1:26 PM

Describe drop orientation and drop height:
ORIENTATION #3 BUT ENDED UP HITTING IN ORIENTATION #4, EDGE SEAM.
DROP HEIGHT IS 32.2 FEET INDICATED BY T10761-32.2

Describe impact (location, rotation, etc.):
IMPACT ON EDGE SEAM OF SHELL (ORIENTATION #4)
SPECIMEN ROTATED FROM LONGITUDINAL SIDE TO EDGE SIDE OF SHELL.

Describe on-site inspection (damage, broken parts, etc.):
LARGE DENT ON EDGE SEAM NEAR LONGITUDINAL SEAM.

On-site test assessment:

- Was the test performed in accordance with 10 CFR 71, IAEA TS-R-1 1996, and this test plan? **Yes or No.** FOR ORIENTATION #4 (TP180D)
- Does the test specimen meet the requirements of 10 CFR 71 and IAEA TS-R-1 1996 for this test? **Yes or No.**
- Any changes to subsequent drop orientations needed to achieve maximum damage? Especially for the SENTRY 330 Standard, SENTRY 330 Special, and SENTRY Source Changer configurations. **Yes or No.** If yes, then identify and justify.
- Did sufficient damage occur at or on the rear-plate attachment area to warrant further drop testing the SENTRY 110 Projector – Basic configuration because of its thinner rear-plate? **Yes or No.**
- Should testing continue with this test specimen? **Yes or No.** If yes, next test: REPEAT 30-FOOT DROP
- Will the test specimen pass the thermal test based on the accumulated damage assessment? **Yes or No**

Engineering: SG 2MAR10 **Regulatory:** 1 APR 10 **QA:** 2 MAR 10

Describe any post-test disassembly and inspection:
SEE PUNCTURE TEST DATA SHEET.

Describe any change in source position (if possible):
SOURCE LOCATION MOVE ABOUT 1/32 INCH TO REAR.

Describe results of radiography (if performed):
NOT PERFORMED.

Completed by: S. Gomi	Date: 3 MAR 10

Free Drop & Puncture Test Checklist

Test:	**30-Foot Free Drop Test**
Test Location:	**QSA Global Burlington MA**

Step	Data	
1. Record test specimen serial number:	TP180C (2ND DROP)	
2. Record the test specimen weight:	652 LBS	
3. Record the ambient temperature:	47°F	Instrument S/N: ENG-20
4. Identify set-up orientation figure:	ORIENTATION #3 HIT SIDE OF SHELL ON LONG SEAM	
5. Record drop height.	32.2 FT	USED T10761-32.2 S/N: TP180-4
6. Photograph set-up in at least two perpendicular planes.		
7. Begin video recording of the test so that impact is recorded.		
8. Release the test specimen.		
9. Stop the video recorder. Ensure the point of impact and orientation specified in the plan has been achieved.		

10. Record the damage to the test specimen. Use a separate sheet and attach, if needed.

LONGITUDINAL WELD SEAM FLATTENED TOWARDS CENTER OF SHELL

11. Engineering, Regulatory Affairs and Quality Assurance makes a preliminary assessment relative to 10 CFR 71. If needed, record the assessment on a separate sheet and attach.

☒ **Preliminary assessment indicates test specimen meets the 30-foot drop test requirements of 10 CFR Part 71.**

☐ **Preliminary assessment indicates test specimen does not meet the 30-foot drop test requirements of 10 CFR Part 71.**

Test witnessed by (Signature)	Print Name	Date
Engineering: S. Grenier	S. GRENIER	2 MAR 10
Regulatory Affairs: L. Podolak	L. Podolak	1 Apr 10
Quality Assurance: C. Loughran	C Loughran	7 Apr 10

Free Drop & Puncture Test Data Sheet

Test Unit Model/Serial No.: TP180C	Test: 30-FOOT FREE DROP (2ND DROP)
Test Date: 2 MAR 10	Test Time: 1:47 PM

Describe drop orientation and drop height:
ORIENTATION #3. HIT ON LONGITUDINAL WELD SEAM - SIDE OF SHELL.
DROP HEIGHT IS 32.2 FEET AS INDICATED BY T10761-32.2

Describe impact (location, rotation, etc.):
IMPACT LOCATION IS DIRECTLY ON THE LONGITUDINAL WELD SEAM.
NO ROTATION OR TILT.

Describe on-site inspection (damage, broken parts, etc.):
THE LONGITUDINAL WELD SEAM SURFACE IS FLATTENED INTO THE CYLINDRICAL SHELL. THE BULGE PRODUCED EARLIER IS NOW SMALLER.

On-site test assessment:

- Was the test performed in accordance with 10 CFR 71, IAEA TS-R-1 1996, and this test plan? **Yes or No.**
- Does the test specimen meet the requirements of 10 CFR 71 and IAEA TS-R-1 1996 for this test? **Yes or No.**
- Any changes to subsequent drop orientations needed to achieve maximum damage? Especially for the SENTRY 330 Standard, SENTRY 330 Special, and SENTRY Source Changer configurations. **Yes or No.** If yes, then identify and justify.
- Did sufficient damage occur at or on the rear-plate attachment area to warrant further drop testing the SENTRY 110 Projector – Basic configuration because of its thinner rear-plate? **Yes or No.**
- Should testing continue with this test specimen? **Yes or No.** If yes, next test: PUNCTURE DROP
- Will the test specimen pass the thermal test based on the accumulated damage assessment? **Yes or No**

Engineering: SG 2MAR10 **Regulatory:** 1 Apr 10 **QA:** 7 Apr 10

Describe any post-test disassembly and inspection:
SEE PUNCTURE TEST DATA SHEET

Describe any change in source position (if possible):
SOURCE LOCATION MOVED ABOUT 1/32 INCH TOWARD REAR.

Describe results of radiography (if performed):
NOT PERFORMED.

Completed by: S. Gomm	Date: 3 MAR 10

Free Drop & Puncture Test Checklist

Test:	**Puncture Test**	
Test Location:	**QSA Global Burlington MA**	
Step	**Data**	
1. Record test specimen serial number:	TP180 C	
2. Record the test specimen weight:	652 LBS.	
3. Record the ambient temperature:	44 °F	Instrument S/N: ENG-20
4. Identify set-up orientation figure:	ORIENTATION #4. HIT ON SHELL EDGE AT LONGITUDINAL SEAM.	
5. Record drop height.	3.6 FEET	USED T10761-3.6 S/N: TP180-16
6. Photograph set-up in at least two perpendicular planes.		
7. Begin video recording of the test so that impact is recorded.		
8. Release the test specimen.		
9. Stop the video recorder. Ensure the point of impact and orientation specified in the plan has been achieved.		
10. Record the damage to the test specimen. Use a separate sheet and attach, if needed. SUPERFICIAL DENT AT EDGE WELD SEAM.		
11. Engineering, Regulatory Affairs and Quality Assurance makes a preliminary assessment relative to 10 CFR 71. If needed, record the assessment on a separate sheet and attach. ☒ **Preliminary assessment indicates test specimen meets the puncture test requirements of 10 CFR Part 71.** ☐ **Preliminary assessment indicates test specimen does not meet the puncture test requirements of 10 CFR Part 71.**		
Test witnessed by (Signature)	**Print Name**	**Date**
Engineering: S. Grenigi	S. GRENIGA	2 APR 10
Regulatory Affairs: [illegible]	C. Pedlik	1 Apr 10
Quality Assurance: C. Roughan	C. Roughan	7 Apr 10

Free Drop & Puncture Test Data Sheet

Test Unit Model/Serial No.: TP180C	Test: **Puncture Test**
Test Date: 2 MAR 10	Test Time: 3:55 PM

Describe drop orientation and drop height:
ORIENTATION #4 - HIT ON SHELL EDGE SEAM AT LONGITUDAL WELD SEAM.
DROP HEIGHT IS 3.6 FEET INDICATED BY T10761-3.6

Describe impact (location, rotation, etc.):
DIRECT HIT AT IMPACT LOCATION
~~NO-POI~~ TEST SPECIMEN BACK FLIPPED OFF PUNCTURE BILLET ONTO GROUND.

Describe on-site inspection (damage, broken parts, etc.):
SHALLOW DENT AT IMPACT LOCATION CAUSED BY PUNCTURE BILLET.

On-site test assessment:

- Was the test performed in accordance with 10 CFR 71, IAEA TS-R-1 1996, and this test plan? **Yes or No.**
- Does the test specimen meet the requirements of 10 CFR 71 and IAEA TS-R-1 1996 for this test? **Yes or No.**
- Any changes to subsequent drop orientations needed to achieve maximum damage? Especially for the SENTRY 330 Standard, SENTRY 330 Special, and SENTRY Source Changer configurations. **Yes or No.** If yes, then identify and justify.
- Did sufficient damage occur at or on the rear-plate attachment area to warrant further drop testing the SENTRY 110 Projector – Basic configuration because of its thinner rear-plate? **Yes or No**
- Should testing continue with this test specimen? **Yes or No.** If yes, next test: _____
- Will the test specimen pass the thermal test based on the accumulated damage assessment? **Yes or No**

Engineering: SD 2MAR10 **Regulatory:** 1 APR 10 **QA:** CML 7 APR 10

Describe any post-test disassembly and inspection: ALL REAR PLATE HARDWARE INTACT.
POSILOCK FUNCTIONS NORMALLY. SLIGHT OBSTRUCTION PROJECTING SOURCE. SOURCE TUBE BROKEN.

Describe any change in source position (if possible): SHIELD SHIFTED TO SIDE ABOUT 1/4 INCH.
NO CHANGE IN SOURCE LOCATION.

Describe results of radiography (if performed):
NOT PERFORMED.

Completed by: S. Gr[illegible]	Date: 3 MAR 10

Test Inspection Data Sheet

Test Specimen Serial No.: TP180C	Last Test Performed: PUNCTURE TEST

Describe and measure (if appropriate) any damage or broken parts, etc.:

ABOUT A 1.5 INCH HIGH BULGE ON TOP END OF PACKAGE
SOURCE TUBE BROKEN OFF AT REAR PLATE END.
SHIELD SHIFTED INSIDE PACKAGE ABOUT 0.3 INCHES TOWARDS LONGITUDINAL WELD SEAM.

Describe and measure (if appropriate) any signs of permanent strain or deformation:

~ 1.5 INCH BULGE ON TOP END PLATE
- UPPER SHIELD BARRIER AT REAR PORT BENT TOWARDS IMPACT TARGET #2 (LONGITUDINAL WELD SEAM).

Describe the condition of the simulated source wire assembly.

NO VISIBLE SIGNS OF DAMAGE TO SIMULATED SOURCE WIRE

Reassemble the package using a representative active source, making sure that the source position and the package configuration is the same as they were immediately after the last test.

Measure and record a radiation profile of each test specimen in accordance with QSA Global Work Instruction WI-Q-1806.

Compare the pre-test dose levels with post-test dose levels at the surface of the package and at 1 meter from the surface of the package.

NEGLIGIBLE DIFFERENCE BETWEEN PRE AND POST DOSE LEVELS ON SURFACE AND 1 METER FROM SURFACE OF TESTED PACKAGE.

Is a radiograph required to inspect for hidden component damage or failure? If radiography is performed, describe any damage or failures found.

NOT PERFORMED.

Completed by: S. Gemini	Date: 10 MAR 10

Free Drop & Puncture Test Checklist

Test:	**30-Foot Free Drop Test**
Test Location:	**QSA Global Burlington MA**

Step	Data	
1. Record test specimen serial number:	TP180 E	
2. Record the test specimen weight:	659 LBS	
3. Record the ambient temperature:	48 °F	Instrument S/N: ENG-20
4. Identify set-up orientation figure:	ORIENTATION #5. TOP SURFACE OF WELDED BODY	
5. Record drop height.	32.2 FT	USED T10761-32.2 S/N: TP180-1
6. Photograph set-up in at least two perpendicular planes. ✓		
7. Begin video recording of the test so that impact is recorded. ✓		
8. Release the test specimen. ✓		
9. Stop the video recorder. Ensure the point of impact and orientation specified in the plan has been achieved.		
10. Record the damage to the test specimen. Use a separate sheet and attach, if needed. TOP EDGE OF WELDED BODY DENTED NEAR THE FRONT ACCESS PORT.		

11. Engineering, Regulatory Affairs and Quality Assurance makes a preliminary assessment relative to 10 CFR 71. If needed, record the assessment on a separate sheet and attach.

☒ **Preliminary assessment indicates test specimen meets the 30-foot drop test requirements of 10 CFR Part 71.**

☐ **Preliminary assessment indicates test specimen does not meet the 30-foot drop test requirements of 10 CFR Part 71.**

Test witnessed by (Signature)	Print Name	Date
Engineering: S. Grenier	S. GRENIER	2 MAR 10
Regulatory Affairs: L. P. [illegible]	L. P. [illegible]	1 Apr 10
Quality Assurance: C. Roughan	C Roughan	7 Apr 10

Free Drop & Puncture Test Data Sheet

Test Unit Model/Serial No.: TP180E	Test: 30-FOOT FREE DROP
Test Date: 2 MAR 10	Test Time: 10:14 AM

Describe drop orientation and drop height:
ORIENTATION #5. IMPACT ON TOP SURFACE OF WELDED BODY.
DROP HEIGHT IS 32.2 FEET INDICATED WITH T10761-32.2

Describe impact (location, rotation, etc.):
IMPACT ON TOP SURFACE OF WELDED BODY.
SLIGHT ROTATION WITH FRONT ACCESS PORT LOWER UPON IMPACT.

Describe on-site inspection (damage, broken parts, etc.):
ABOUT AN 8-INCH DENT ON RIM OF WELDED CYLINDER NEAR THE FRONT ACCESS PORT.

On-site test assessment:

- Was the test performed in accordance with 10 CFR 71, IAEA TS-R-1 1996, and this test plan? **Yes or No.**
- Does the test specimen meet the requirements of 10 CFR 71 and IAEA TS-R-1 1996 for this test? **Yes or No.**
- Any changes to subsequent drop orientations needed to achieve maximum damage? Especially for the SENTRY 330 Standard, SENTRY 330 Special, and SENTRY Source Changer configurations. **Yes or No.** If yes, then identify and justify.
- Did sufficient damage occur at or on the rear-plate attachment area to warrant further drop testing the SENTRY 110 Projector – Basic configuration because of its thinner rear-plate? **Yes or No**
- Should testing continue with this test specimen? **Yes or No.** If yes, next test: PUNCTURE TEST
- Will the test specimen pass the thermal test based on the accumulated damage assessment? **Yes or No**

Engineering: 2MAR10 **Regulatory:** 1 Apr 10 **QA:** 7 Apr 10

Describe any post-test disassembly and inspection:
SEE PUNCTURE TEST DATA SHEET

Describe any change in source position (if possible):
SOURCE LOCATION MOVE ABOUT 1/16 INCH TOWARDS FRONT PLATE END.

Describe results of radiography (if performed):
NOT PERFORMED.

Completed by: S. Gonzi	Date: 3 MAR 10

Free Drop & Puncture Test Checklist

Test:	**Puncture Test**		
Test Location:	**QSA Global Burlington MA**		
Step		**Data**	
1. Record test specimen serial number:		TP180 E	
2. Record the test specimen weight:		659 LBS.	
3. Record the ambient temperature:		45 °F	Instrument S/N: GNG-20
4. Identify set-up orientation figure:		ORIENTATION # 1 HIT ON DUST COVER	
5. Record drop height.		3.6 FEET	USED T10761-3.6 S/N: TP180-11
6. Photograph set-up in at least two perpendicular planes.			
7. Begin video recording of the test so that impact is recorded.			
8. Release the test specimen.			
9. Stop the video recorder. Ensure the point of impact and orientation specified in the plan has been achieved.			

10. Record the damage to the test specimen. Use a separate sheet and attach, if needed.

TEST SPECIMEN DROPPED TWICE
1. HIT ACCESS PORT TUBE ON 1ST TRY. - DENT ON PORT.
2. HIT ON DUST COVER 2ND TRY - DUST COVER SLIGHTLY COMPRESSED INTO ACCESS PORT.

11. Engineering, Regulatory Affairs and Quality Assurance makes a preliminary assessment relative to 10 CFR 71. If needed, record the assessment on a separate sheet and attach.

☒ **Preliminary assessment indicates test specimen meets the puncture test requirements of 10 CFR Part 71.**

☐ **Preliminary assessment indicates test specimen does not meet the puncture test requirements of 10 CFR Part 71.**

Test witnessed by (Signature)	**Print Name**	**Date**
Engineering: S. Grenier	S. GRENIER	2 APR 10
Regulatory Affairs: L. Robilotto	L Robilotto	1 Apr 10
Quality Assurance: C. Roughan	C Roughan	7 Apr 10

Free Drop & Puncture Test Data Sheet

Test Unit Model/Serial No.: TP180 E	Test: **Puncture Test**
Test Date: 2 MAR 10	Test Time: #1: 3:11 PM #2: 5:34 PM

Describe drop orientation and drop height:
ORIENTATION #1 – HIT ONTO DUST COVER.
DROP HEIGHT IS 3.6 FEET INDICATED BY T10761-3.6

Describe impact (location, rotation, etc.):
2ND IMPACT ON FACE OF DUST COVER
TEST SPECIMEN ROTATED OFF PUNCTURE BILLET AFTER SLIGHT BOUNCE.

Describe on-site inspection (damage, broken parts, etc.):
PLASTIC DUST COVER COMPRESSED INTO ACCESS PORT.
NO BROKEN PARTS.

On-site test assessment:

- Was the test performed in accordance with 10 CFR 71, IAEA TS-R-1 1996, and this test plan? **Yes or No.**
- Does the test specimen meet the requirements of 10 CFR 71 and IAEA TS-R-1 1996 for this test? **Yes or No.**
- Any changes to subsequent drop orientations needed to achieve maximum damage? Especially for the SENTRY 330 Standard, SENTRY 330 Special, and SENTRY Source Changer configurations. **Yes or No** If yes, then identify and justify.
- Did sufficient damage occur at or on the rear-plate attachment area to warrant further drop testing the SENTRY 110 Projector – Basic configuration because of its thinner rear-plate? **Yes or No**
- Should testing continue with this test specimen? **Yes or No** If yes, next test: _____
- Will the test specimen pass the thermal test based on the accumulated damage assessment? **Yes or No**

Engineering: 2MAR10 **Regulatory:** 1 Apr 10 **QA:** 7 MAR 10

Describe any post-test disassembly and inspection: ALL REAR PLATE HARDWARE INTACT.
POSILOCK WORKS, BUT SLIDE STICKS. DUMMY SOURCE WIRE PROJECTS AND IS UNAFFECTED.

Describe any change in source position (if possible): SOURCE TUBE DEFORMED INTO OVAL SHAPE.
SOURCE LOCATION MOVED APPROXIMATELY 1/16 (0.06) INCH.

Describe results of radiography (if performed):
NOT PERFORMED.

Completed by: S. Gr[illegible]	Date: 3 MAR 10

Test Inspection Data Sheet

Test Specimen Serial No.: TP180 E	Last Test Performed: PUNCTURE TEST #2

Describe and measure (if appropriate) any damage or broken parts, etc.:

- ABOUT A 10 INCH LONG DENT ON CORNER EDGE OF TOP ENDPLATE
- REAR ACCESS PORT TUBE DENTED IN TOWARDS CENTER ~1 inch.

Describe and measure (if appropriate) any signs of permanent strain or deformation:

- SEE ABOVE

Describe the condition of the simulated source wire assembly.

NO VISIBLE SIGNS OF DAMAGE TO SIMULATED SOURCE WIRE

Reassemble the package using a representative active source, making sure that the source position and the package configuration is the same as they were immediately after the last test.

Measure and record a radiation profile of each test specimen in accordance with QSA Global Work Instruction WI-Q-1806.

Compare the pre-test dose levels with post-test dose levels at the surface of the package and at 1 meter from the surface of the package.

NEGLIGIBLE DIFFERENCE BETWEEN PRE AND POST DOSE LEVELS ON SURFACE AND AT 1 METER FROM SURFACE OF TESTED PACKAGE.

Is a radiograph required to inspect for hidden component damage or failure? If radiography is performed, describe any damage or failures found.

NOT PERFORMED.

Completed by: S. Gr[illegible]	Date: 10 MAR 10

Free Drop & Puncture Test Checklist

Test:	**30-Foot Free Drop Test**		
Test Location:	**QSA Global Burlington MA**		
Step		**Data**	
1. Record test specimen serial number:		TP180 G	
2. Record the test specimen weight:		728 LBS.	
3. Record the ambient temperature:		48°F	Instrument S/N: ENG-20
4. Identify set-up orientation figure:		ORIENTATION #5. HIT ON BOTTOM RIB SURFACE.	
5. Record drop height.		32.2 FEET	USED T10761-32.2 S/N: TP180-6
6. Photograph set-up in at least two perpendicular planes.			
7. Begin video recording of the test so that impact is recorded.			
8. Release the test specimen.			
9. Stop the video recorder. Ensure the point of impact and orientation specified in the plan has been achieved.			
10. Record the damage to the test specimen. Use a separate sheet and attach, if needed.			

ONE LOAD PIN AND FOUR RIB MOUNTING BOLTS FAILED IN SHEAR.
BOTTOM RIBS ARE BENT AND CRACKED.
BASIC PACKAGE CONFIGURATION INTACT AND UNAFFECTED EXCEPT FOR ONE SMALL SHALLOW CUT INTO AN EDGE WELD AND THE SHELL CAUSED BY THE RIB COMPRESSING INTO THE SHELL.

11. Engineering, Regulatory Affairs and Quality Assurance makes a preliminary assessment relative to 10 CFR 71. If needed, record the assessment on a separate sheet and attach.

☒ **Preliminary assessment indicates test specimen meets the 30-foot drop test requirements of 10 CFR Part 71.**

☐ **Preliminary assessment indicates test specimen does not meet the 30-foot drop test requirements of 10 CFR Part 71.**

Test witnessed by (Signature)	**Print Name**	**Date**
Engineering: S. GRENIER	S. GRENIER	2 MAR 10
Regulatory Affairs: L. Pidilch	L. Pidilch	1 Apr 10
Quality Assurance: C. Roughan	C. Roughan	7 Apr 10

Free Drop & Puncture Test Data Sheet

Test Unit Model/Serial No.: TP180G	Test: 30-FOOT FREE DROP
Test Date: 2 MAR 10	Test Time: 2:04 PM

Describe drop orientation and drop height:
ORIENTATION #5 EXCEPT TARGETING BOTTOM (NOT INVERTED)
DROP HEIGHT IS 32.2 FEET AS INDICATED BY T10761-32.2

Describe impact (location, rotation, etc.):
IMPACT LOCATION ON BOTTOM RIBS.
SLIGHT ROTATION CAUSED TWO RIBS TO HIT FIRST.

Describe on-site inspection (damage, broken parts, etc.):
BROKEN LOAD PIN (1) AND RIB BOLTS (4). RIBS BENT AND CRACKED.
BASIC PACKAGE WALLS UNAFFECTED.

On-site test assessment:

- Was the test performed in accordance with 10 CFR 71, IAEA TS-R-1 1996, and this test plan? **Yes or No.**
- Does the test specimen meet the requirements of 10 CFR 71 and IAEA TS-R-1 1996 for this test? **Yes or No.**
- Any changes to subsequent drop orientations needed to achieve maximum damage? Especially for the SENTRY 330 Standard, SENTRY 330 Special, and SENTRY Source Changer configurations. **Yes or No.** If yes, then identify and justify.
- Did sufficient damage occur at or on the rear-plate attachment area to warrant further drop testing the SENTRY 110 Projector – Basic configuration because of its thinner rear-plate? **Yes or No.**
- Should testing continue with this test specimen? **Yes or No.** If yes, next test: _____
- Will the test specimen pass the thermal test based on the accumulated damage assessment? **Yes or No**

Engineering: SG 2 MAR 10 **Regulatory:** 7 Apr 10 **QA:** 7 Apr 10

Describe any post-test disassembly and inspection:
ALL HANDING RIBS REMOVED AND STORED.

Describe any change in source position (if possible):
SOURCE LOCATION MOVED ABOUT 0.06 INCHES. TOWARDS REAR PORT.

Describe results of radiography (if performed):
NOT PERFORMED

Completed by: S. GREENIAN	Date: 3 MAR 10

Free Drop & Puncture Test Checklist

Test:	**30-Foot Free Drop Test**
Test Location:	**QSA Global Burlington MA**

Step	Data	
1. Record test specimen serial number:	TP180G (WITH RIGS REMOVED)	
2. Record the test specimen weight:	661 LBS.	
3. Record the ambient temperature:	66°F	Instrument S/N: ENG-20
4. Identify set-up orientation figure:	ORIENTATION #5 HIT DIRECTLY ON TOP FLAT SURFACE	
5. Record drop height.	32.2 FEET	USED T10761-32.2 S/N: TP180-9
6. ✓ Photograph set-up in at least two perpendicular planes.		
7. ✓ Begin video recording of the test so that impact is recorded.		
8. ✓ Release the test specimen.		
9. Stop the video recorder. Ensure the point of impact and orientation specified in the plan has been achieved.		

10. Record the damage to the test specimen. Use a separate sheet and attach, if needed.

NO DAMAGE TO WELDED BODY. ALL BOLTS AND SCREWS INTACT.

OUTLET PORT KNOB MISSING. KNOB FOUND ~2 FEET AWAY AND APPEARS TO HAVE BRASS SHAFT SHEARED OFF.

11. Engineering, Regulatory Affairs and Quality Assurance makes a preliminary assessment relative to 10 CFR 71. If needed, record the assessment on a separate sheet and attach.

☑ ✓ **Preliminary assessment indicates test specimen meets the 30-foot drop test requirements of 10 CFR Part 71.**

☐ **Preliminary assessment indicates test specimen does not meet the 30-foot drop test requirements of 10 CFR Part 71.**

Test witnessed by (Signature)	Print Name	Date
Engineering: S. Grenier	STEVE GRENIER	19 MAR 2010
Regulatory Affairs: L. Pokolde	L. Pokolde	1 Apr 10
Quality Assurance: C. Loughran	C. Loughran	7 Apr 10

Free Drop & Puncture Test Data Sheet

Test Unit Model/Serial No.: TP180G *	Test: **30-Foot Free Drop**
Test Date: 19 MAR 2010	Test Time: 11:02 AM

Describe drop orientation and drop height:
ORIENTATION #5. IMPACT ON TOP SURFACE OF WELDED BODY.
DROP HEIGHT IS 32.2 FEET INDICATED BY T10761-32.2

Describe impact (location, rotation, etc.):
IMPACT SQUARELY ON TOP FLAT SURFACE OF WELDED BODY
PACKAGE BOUNCED STRAIGHT UP THEN FLIPPED AND LANDED INVERTED.

Describe on-site inspection (damage, broken parts, etc.):
IMPACT IMPRINT ON TOP SURFACE OF BODY.
OUTLET PORT (FRONT PLATE) KNOB MISSING AND FOUND 2 FEET AWAY.

On-site test assessment:

- Was the test performed in accordance with 10 CFR 71, IAEA TS-R-1 1996, and this test plan? **Yes or No.**
- Does the test specimen meet the requirements of 10 CFR 71 and IAEA TS-R-1 1996 for this test? **Yes or No.**
- Any changes to subsequent drop orientations needed to achieve maximum damage? Especially for the SENTRY 330 Standard, SENTRY 330 Special, and SENTRY Source Changer configurations. **Yes or No.** If yes, then identify and justify.
- Did sufficient damage occur at or on the rear-plate attachment area to warrant further drop testing the SENTRY 110 Projector – Basic configuration because of its thinner rear-plate? **Yes or No**
- Should testing continue with this test specimen? **Yes or No.** If yes, next test: _____
- Will the test specimen pass the thermal test based on the accumulated damage assessment? **Yes or No**

Engineering: 19 MAR 10 **Regulatory:** 7 Apr 10 **QA:** 7 Apr 10

Describe any post-test disassembly and inspection:
FRONT AND REAR PLATES REMOVED AND INSPECTED - SEE PHOTOS.

Describe any change in source position (if possible):
NO CHANGE IN SOURCE LOCATION.

Describe results of radiography (if performed):
NOT PERFORMED.

Completed by: S. Gen	Date: 19 MAR 10

* WITH RIBS REMOVED.

Test Inspection Data Sheet

Test Specimen Serial No.: TP180G	Last Test Performed: 30-FOOT DROP (#1)

Describe and measure (if appropriate) any damage or broken parts, etc.:

- MULTIPLE BROKEN RIB MOUNTING FASTENERS
- BOTTOM RIBS SHOW CRACKING AND SPLITING
- SHALLOW CUT INTO BODY CAUSED BY RIBS PRESSING INWARDS.

Describe and measure (if appropriate) any signs of permanent strain or deformation:

- 4 MOUNTING FACES FOR RIBS SHOW SHALLOW IMPRINT ~.03 INCH DEEP.

Describe the condition of the simulated source wire assembly.

NO SIGNS OF DAMAGE TO SIMULATED SOURCE ASSEMBLY

Reassemble the package using a representative active source, making sure that the source position and the package configuration is the same as they were immediately after the last test.

Measure and record a radiation profile of each test specimen in accordance with QSA Global Work Instruction WI-Q-1806.

Compare the pre-test dose levels with post-test dose levels at the surface of the package and at 1 meter from the surface of the package.

POST TEST MEASUREMENTS TAKEN AFTER SECOND 30-FOOT DROP.

Is a radiograph required to inspect for hidden component damage or failure? If radiography is performed, describe any damage or failures found.

NOT PERFORMED.

Completed by: S. Gr[illegible]	Date: 16 MAR 10

Test Inspection Data Sheet

Test Specimen Serial No.: TP180G	Last Test Performed: 30-FOOT DROP (2ND)

Describe and measure (if appropriate) any damage or broken parts, etc.:

- SEE 1ST 30-FOOT DROP DATA SHEET.
- FRONT PLATE PORT KNOB/COVER FRACTURED AT BRASS SHAFT

Describe and measure (if appropriate) any signs of permanent strain or deformation:

SEE ABOVE.

Describe the condition of the simulated source wire assembly.

NO VISIBLE SIGNS OF DAMAGE TO SIMULATED SOURCE WIRE ASSY.

Reassemble the package using a representative active source, making sure that the source position and the package configuration is the same as they were immediately after the last test.

Measure and record a radiation profile of each test specimen in accordance with QSA Global Work Instruction WI-Q-1806.

Compare the pre-test dose levels with post-test dose levels at the surface of the package and at 1 meter from the surface of the package.

- 500 mR/h DIFFERENCE BETWEEN PRE AND POST DOSE LEVELS AT SURFACE OF FRONT PLATE PORT.
- 0.5 mR/h DIFFERENCE BETWEEN PRE AND POST DOSE LEVELS AT 1 METER FROM SURFACE OF PACKAGE. (2.2 mR/h MAX)

Is a radiograph required to inspect for hidden component damage or failure? If radiography is performed, describe any damage or failures found.

NOT PERFORMED.

Completed by: S. [illegible]	Date: 23 MAY 10

2.12.5 Test Plan Report 72-S2 (680-OP) dated 15 February 1999 (minus Appendices A through C)

[redacted]

TEST PLAN NO. 72-52

[redacted]

TEST TITLE:
MODEL 60-OP PACKAGE TYPE B(U) TRANSPORT TEST (THERMAL)

PRODUCT MODEL:
60-OP

ORIGINATED BY: MICHAEL TREMBLAY	DATE: 29 JAN 99

[redacted]

ENGINEERING APPROVAL:	DATE:
QUALITY ASSURANCE APPROVAL:	DATE:
REGULATORY APPROVAL:	DATE:

COMMENTS: SEE COVER SHEET of TP72-52 for approval signatures 9 16 FEB 99

[redacted]

ENGINEERING APPROVAL: [signature]	DATE: 15 FEB 99
QUALITY ASSURANCE APPROVAL: [signature]	DATE: 16 Feb 99
REGULATORY APPROVAL: Catherine Kongman	DATE: 16 Feb 99

[redacted]

TEST PLAN 72-S2 REPORT

MODEL 680-OP

15FEB99

Prepared By: _____ Date: _____

Reviewed By: _____ Date: _____

Approved By: _____ Date: _____

AEA Technology QSA, Inc.
Burlington, MA

TABLE OF CONTENTS

1.0 PURPOSE 3
2.0 SCOPE OF TESTING 3
3.0 FAILURE MODES 4
4.0 TEST UNIT DESCRIPTION 4
5.0 SUMMARY AND CONCLUSIONS 5
6.0 THERMAL TEST – PROJECTOR AT 60° FROM HORIZONTAL 6
6.1 Orientation 6
6.2 Thermocouples and Temperatures 7
6.3 Damage Assessment 8
6.4 Profile Results 9
7.0 THERMAL TEST – PROJECTOR IN OVERPACK 10
7.1 Orientation 10
7.2 Thermocouples and Temperatures 11
7.3 Damage Assessment 13
7.4 Profile Results 13

LIST OF FIGURES

FIGURE 1. SPECIMEN TP72-S1(B) (SN#B198) 6
FIGURE 2. THERMOCOUPLE LOCATIONS 7
FIGURE 3. SPECIMEN TP72-S1(C) (SN#B199) 10
FIGURE 4. THERMOCOUPLE LOCATIONS 11

LIST OF APPENDIXES

APPENDIX A CALIBRATION RECORDS 14
APPENDIX B RADIATION PROFILE DATA SHEETS 15
APPENDIX C TEST CHECKLISTS AND DATA SHEETS 16
APPENDIX D TEST PHOTOGRAPHS 17
APPENDIX E THERMAL GRAPHS 18

1.0 PURPOSE

This report describes the results of Model 680-OP tests which were performed in accordance with Test Plan 72, Supplement 2. The tests were conducted from 26JAN99 though 30JAN99. The Test Plan specified testing necessary to satisfy the requirements in 10 CFR Part 71 and IAEA Safety Series No.6 for "Hypothetical Accident Conditions", specifically 10CFR 71.73(c)(4) - Thermal Test Requirements. Evaluation of the compliance of the Model 680-OP with these requirements is provided in the Safety Analysis Report.

2.0 SCOPE OF TESTING

The scope of testing in Test Plan 72-S2 includes the following:

1. Hypothetical Accident Tests per 10 CFR 71.73.

   a) Thermal test in accordance with 10 CFR71.73(c)(4) for the projector alone in worst case orientation (tilted 60° up from horizontal).

   b) Thermal test in accordance with 10 CFR71.73(c)(4) with the projector within an open overpack with the cover removed. (This test allows for an assessment of the impact on projector temperatures of the combustion of the overpack contents.)

For all tests, sufficient margin was included in test parameters to account for measurement uncertainty. These test parameters included weight and temperature[1].

[1] ANSI Standard MC96.1 specifies an allowable deviation of thermocouples and extension wire from the standard emf-temperature tables. For type "K" thermocouples, the tolerance is required to be the greater of ±2.2°C or ±2% for -200 to 0°C or ±2.2°C or ±0.75°C for 0 to 1250°C. Given these tolerances and assuming a tolerance of ±0.1% for typical instrumentation, the total system uncertainty is shown below. Installation errors are not included. The total system uncertainty is the square root of the sum of the squares of each component.

Temperature	Thermocouple Tolerance	Extension Wire Tolerance	Instrument Accuracy	Total Uncertainty
800°C	±6°C	±6°C	±0.8°C	±8.5°C
-100°C	±2.2°C	±2.2°C	±0.1°C	±3.1°C

3.0 FAILURE MODES

For the Model 680-OP, the key function important to safety is the positive retention of the radioactive source in its stored position within the undamaged depleted uranium shield. Excessive displacement of either the source or the shield from the design position or destruction of the shield could cause radiation from the package to increase above regulatory limits. Mechanisms which could cause this mode of failure include:

a) Excessive movement of the shield due to pyrolization of the Vultafoam, weakening of the leveling jig and shell, and deformation of the source tubes while the source is held in position by the locking mechanism.

b) Combustion of the shield due to damage to the projector shell permitting an excessive ingress of oxygen.

Consequently, the package orientations selected for the hypothetical accident thermal tests were intended to challenge the components that prevent these failures.

4.0 TEST UNIT DESCRIPTION

The units tested are shown in the following table. The Model 680-OP units were constructed in accordance with drawing 97013Rev C. The manufacturing route cards for the units document the compliance of these units with the AEA Technology QSA QA program (see TP72,Appendix B). As noted in the table, the test units had previously been subjected to hypothetical accident drop tests as part of Test Plan 72 and Supplement 1.

MODEL	PROJECTOR SERIAL NO.	DRAWINGS		OVERPACK SPECIMEN
		Projector	Overpack Assembly	
680-OP	B198 (NOTE 1.)	R68090 Rev. C	NA	NA
680-OP	B199 (NOTE 2.)	R68090 Rev. C	97013, Rev C	TP72-S1(C)

Notes:

1. Camera S/N B198 was used in Supplement 1 to Hypothetical Accident Test Plan 72. The camera was dropped in overpack test specimen TP72-S1(B).

2. Camera S/N B199 was used in Hypothetical Accident Test Plan 72. The camera was dropped in overpack test specimen TP72(D).

The 680 projector units were radiographed after the drop tests to document the position of the internal components prior to the thermal tests. Also, the position of the "dummy" source used in the projector was measured prior to thermal testing. Specimen B198 was chosen for thermal testing in the 60° orientation, considered worst case, as it had sustained the most damage in the drop tests.

5.0 SUMMARY AND CONCLUSIONS

Results of the tests are summarized in the table below in the sequence in which the tests were completed. Detailed results are provided in the following sections of this report.

As shown in Appendix E, the highest projector temperatures were seen on right of side of camera B198. Temperatures on this exposed camera were greater than 1000°C throughout the 30 minute test period. These temperatures bound those seen on the hottest surface on the camera contained in the overpack during the 30 minute test of 991°C.

Model	Specimen	Tests Done	Test Results
680-OP	Unit B198 Projector only	Set in oven at 60° from horizontal on jig. Total time in oven was 49 minutes.	- Foam pyrolized - Most lead melted. - Side shells and end plates bulged slightly - Posilock in place and undamaged - Shield moved ~ 1" downward. - Radiation levels acceptable.

680-OP	TP72-S1(C)
	Unit B199
	&
	overpack
		Set in over on feet with long side to elements. Cover removed. Total time in oven was 64 minutes.	- Projector
			  - Most foam pyrolized
			  - Most lead melted.
			  - Projector unaffected dimensionally.
			  - Posilock in place and undamaged
			  - Shield did not move.
			  - Radiation levels acceptable.
			- Overpack-
			  - Most wood burned to ashes
			  - Most foam combusted.
			  - Slight bow in box bottom.

The oven door was held open by insulating strips 1" thick on both sides, creating an opening of one inch at the top and bottom of the oven door (total 72 square inches). This opening created a "chimney effect" within the oven, drawing air in through the bottom and exhausting it out the top, as was evidenced by the flames emanating from the oven thought the tests. This natural convection of air into the furnace was sufficient to combust the pyrolization gases from the projectors and the bracing materials of the overpack.

6.0 THERMAL TEST – PROJECTOR AT 60° FROM HORIZONTAL

6.1 Orientation

The projector was placed in the oven orientated as shown in Figure 1. The unit was supported by a jig constructed of ¾" diameter steel rod, which held the unit in position, but afforded minimal insulation from direct radiation. This orientation was selected based on an assessment of which orientation had the potential to result in the largest relative motion between the shield and the source. (Note that as shown in Figure 1, the top 1 inch of the right side plate was cut off prior to the test. This was done to allow the camera to fit in the test oven and has no impact on the test results.)

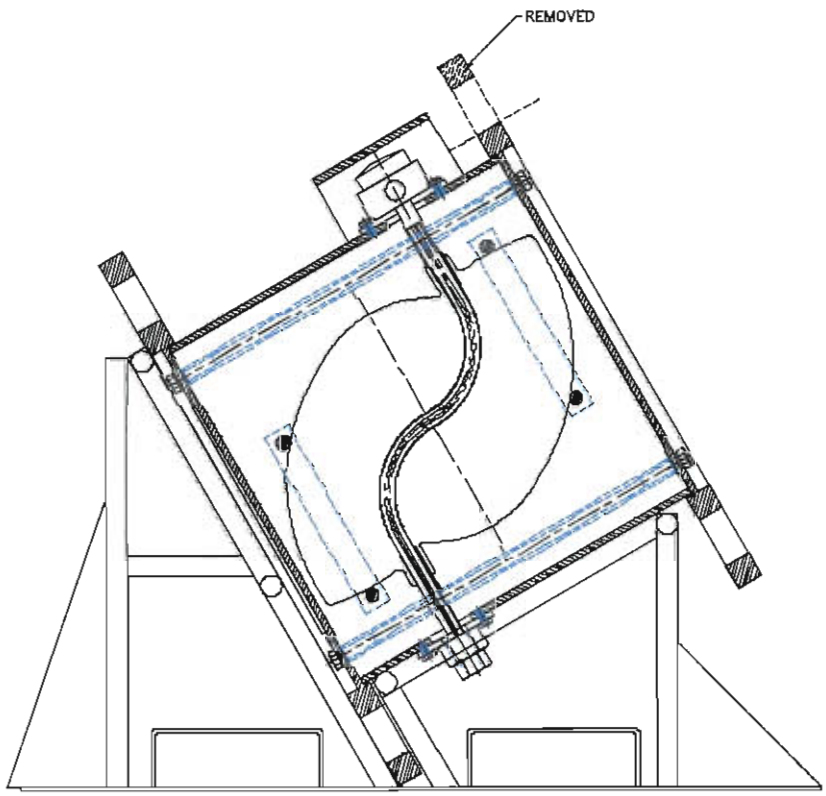

FIGURE 1. SPECIMEN TP72-S1(B) (SN#B198)

6.2 Thermocouples and Temperatures

Thermocouples were placed on the unit as shown in Figure 2. An additional thermocouple was placed within the oven chamber approximately 8 inches away from the left side of the unit. Readings form this thermocouple were used as the actual oven temperature. The temperature read from the oven controller was recorded at various intervals, but used only as an indication of when the oven coils were powered and not as the documented environmental temperature.

Temperatures were recorded from insertion, through burn out, until the unit was moved to temporary storage (Total of 826 minutes). Graphical representation of the data can be found in Appendix E.

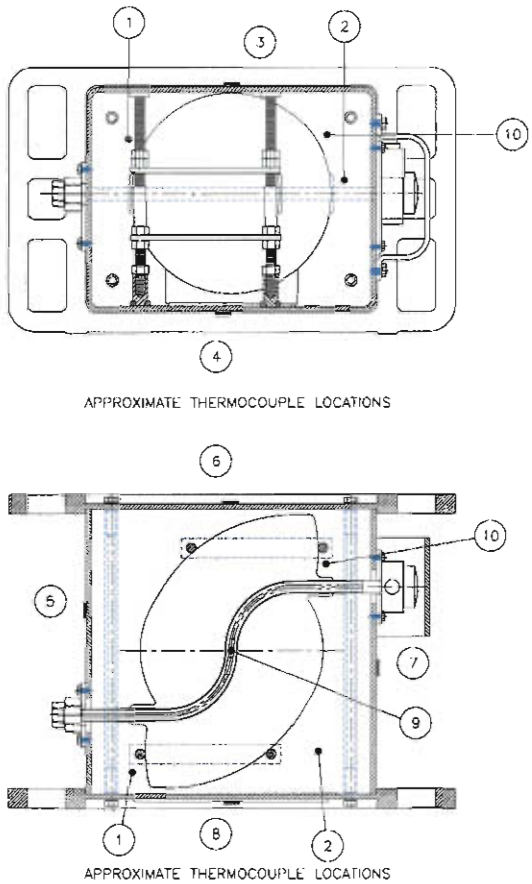

FIGURE 2. THERMOCOUPLE LOCATIONS

The unit was in the oven for 18 minutes before the test time began. It was removed after 49 minutes (total). Initial and final temperatures during the 30 minute test period were as follows. (All temperatures are in °C)

Thermocouple	Initial	Final
3 – Left	800	881
4 – Right	1004	1005
5 – Bottom	804	912
6 – Rear	991	951
7 – Top	912	945
8 – Front	862	924
9 – Source tube	617	924
Oven Ambient	951	800

The temperature of the left side (thermocouple 3) was 800°C when the test time was started, 10° below the stated temperature in the test plan. This side took approximately one (1) minute to reach 810°C. However, the time weighted average of the thermal input to this side far exceeded that required by the regulations, as evidenced by the final temperature. Consistent with the Test Plan, the test time was started when all the shell temperatures (thermocouples # 3,4,5,7) were at 800°C.

Upon removal from the oven, the gas escaping from the unit continued to burn for about 2 hours. Immediately on removal, two (2) white jets of flame were emanating from the small seam between the side plate and shell on the left side of the projector. These jets died down and extinguished in three (3) to four (4) minutes. The unit was left to self-extinguish. This took an additional time of approximately 125 minutes.

6.3 Damage Assessment

The initial on site external assessment showed:

a) Most paint vaporized. Radiation labels legible.
b) Lead dripping out of bottom of unit.
c) Outward bow of upper side plate, and the right and lift sides of the shell. This resulted in small 3-4" long by 1/16" wide gaps to form on both sides, at the intersection of the upper side plate and shell.
d) Shipping cover and Posilock in place and undamaged. Plunger lock melted.

After radiographs of the unit were examined, it was determined that:

a) The shield had shifted downward a small amount. The ears of the shield were jammed against the lower side frame and leveling jigs.
b) Lead dispersed in the carbon char matrix obscured views of the source tube on the front end.
c) Measurement of the source through the front source tube connection was not feasible on site due to lead within the source tube and potential buckling of the tube.
d) Some of the lead sheet placed around the shield (to increase weight) remained .

It was not feasible to profile the unit on site within acceptable safety margins. It was therefore decided to remove the top side plate in order to 1) to accurately determine the position of the shield, 2) assess all internal damage and 3) secure the shield in position for shipment.

Upon removal of the top side plate it was noted that the carbon char matrix filled approximately 95% of the space the foam had occupied. Partially melted lead sheet was found near the top and sides of the shield. Some molten lead had percolated down to the lower corner and was dispersed throughout the matrix. The lower source tube and lower leveling jig could not be observed, even after removal of most of the carbon char. The lower rod of the upper jig had disengaged from the cleats due to bowing of the shell. However, both upper rods showed essentially no deformation. The carbon char was removed in sections and replaced with Vultafoam to ensure the shield would not move during shipment.

Upon receipt at Burlington, the front plate securing the shipping plug was removed. The source tube was found to be buckled and jammed against the boss inside the source tube connector.

The rear plate Posilock assembly was also removed. The dummy source was withdrawn from the source tube without much effort. The tope edge of the source tube was 1.063" below the plane of the outside of the shell and 0.212" off center. This translates to a shield movement of approximately 1".

6.4 Profile Results

The unit was profiled with a 83 Ci Co60 source dimensionally identical to the dummy source used in the thermal test (see Appendix B). The source was inserted into the projector and locked into position with the Posilock. This simulated the position of the dummy source in the test. The unit was then profiled. The highest readings, found only in one very small area, were 250 mR/hr at one (1) meter at approximately a 60° angle away and 45° down from the Posilock. When scaled to the maximum capacity of the unit (110 Ci Co60) this translates to a reading of approximately 330 mR/hr at one (1) meter. This is 33% of the regulatory requirement of 1000 mR/hr at one (1) meter for a factor of safety of 3.

7.0 THERMAL TEST – PROJECTOR IN OVERPACK

7.1 Orientation

The projector was placed in the oven orientated as shown in Figure 3. The overpack was placed length-wise with the short sides toward the back and front of the oven. Information from this orientation is being used to quantify the effects of the combustion of the overpack on the projector temperatures. These results will be used in conjunction with the test of the worst case camera orientation discussed in Section 6.0 to assess the potential combination of a projector in an overpack placed in the worst case orientation.

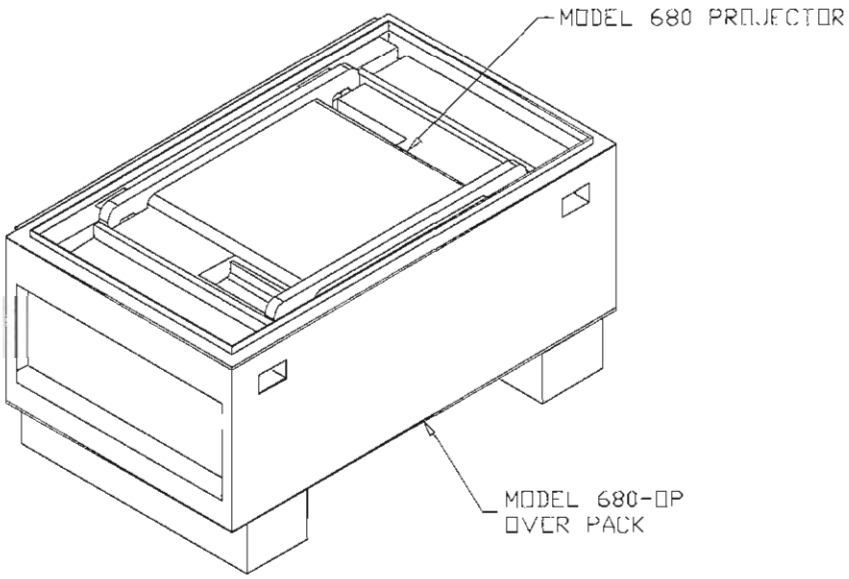

FIGURE 3. SPECIMEN TP72-S1(C) (SN#B199)

7.2 Thermocouples and Temperatures

Thermocouples were placed on the unit as shown in Figure 4. An additional thermocouple was placed within the oven chamber approximately 8 inches away from the left side of the unit. Readings form this thermocouple were used as the actual oven temperature. The temperature read from the oven controller was recorded at various intervals, but used only as an indication of when the oven coils were powered and not as the documented environmental temperature.

Temperatures were recorded from insertion, through burn out, until the unit was moved to temporary storage (Total of 375 minutes). Graphical representation of the data can be found in Appendix E.

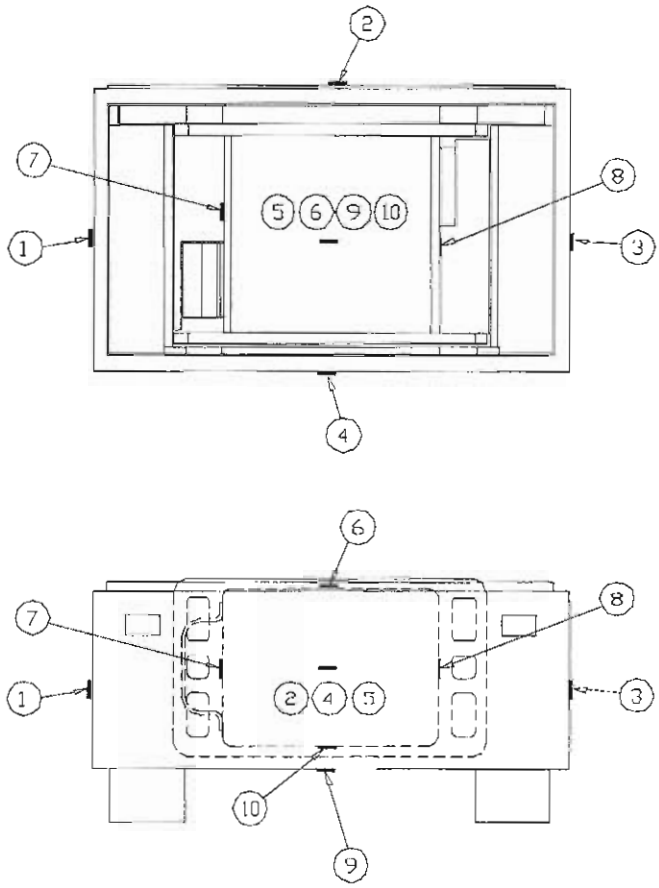

FIGURE 4. THERMOCOUPLE LOCATIONS

The unit was in the oven for 34 minutes before the test time began. It was removed after 64 minutes (total). Initial and final temperatures during the 30 minute test period were as follows.: (All temperatures are in °C)

Thermocouple	Initial	Final
1 – Box Rear	1022	974
2 – Box Right	951	920
3 – Box Front	827	840
4 – Box Left	955	926
5 – Source Tube	1004	979
6 – Projector Top	975	959
7 – Projector Rear	991	972
8 – Projector Front	981	964
9 – Box Bottom	800	816
10 – Projector Bottom	990	967
11 – Projector Left	977	960
12 – Oven Ambient	953	919

The temperature of the Box Bottom (thermocouple 9) was 800°C when the test time was started, 10° below the stated temperature in the test plan. The time weighted average of the thermal input to this side did exceeded that required by the regulations, as evidenced by the final temperature and the area under the graph. Consistent with the Test Plan, the test time was started when all the external surface temperatures (thermocouples # 1,2,3,4,6,9) were at 800°C.

As shown in Appendix E, the temperatures on the bottom and front of the overpack took about 30 minutes to reach 800°C. The slow response of these temperatures is believed to be a result of the air flow patterns within the furnace. In particular, with the furnace door open at the top and bottom, a natural draft was setup which resulted in ambient air entering the bottom of the furnace. This air flow served to keep the bottom and front surfaces of the overpack cooler than the rest of the package.

Upon removal from the oven, the packing materials within the overpack continued to burn. After a short time, the flame was limited to the top of the projector, burning only escaping gases from the foam and smoldering wood within the overpack. The unit was left to self-extinguish. This took approximately 245 additional minutes. During most of this time the flame consisted of a very cool, small diffusion fire on the top of the projector and smoldering char within the overpack.

7.3 Damage Assessment

The initial on site external assessment showed:

a) Some of the paint remained on the labels, especially on the sides of the projector. Radiation labels legible.
b) No lead noticeable at bottom of overpack or any where external to the projector.
c) Projector dimensionally unchanged. No noticeable bulging or sagging.
d) Shipping cover and Posilock in place and undamaged. Plunger lock slightly melted.

After radiographs of the unit were examined, it was determined that:

a) The shield had not moved.
b) Measurement of the source position through the front source tube connection was not feasible on site and would be performed at Burlington.
c) Some of the lead sheet placed around the shield (to increase weight) remained .
d) It was not feasible to profile the unit on site within acceptable safety margins.
e) It was necessary to disassemble the unit to accurately determine, the extend of foam pyrolization and to assess any internal damage. This would be performed at Burlington.

Upon receipt of the units at Burlington, the shipping plug was removed and the source position measured at 9 13/16", essentially unchanged from the original. The rear plate Posilock assembly was removed. The dummy source was withdrawn from the source tube without much effort. The position of the source tube confirmed that the shield had not shifted during transport. A functional test confirmed that all mechanisms operated properly.

The side plates were removed. The carbon char matrix filled approximately 95% of the space the foam had occupied. The density and resistance to probing of the matrix indicated that the foam had not totally pyrolized. Partially melted lead sheet was found near the top and sides of the shield. Some molten lead had percolated down to the bottom of the projector and was dispersed throughout the matrix. All components showed essentially no deformation.

7.4 Profile Results

The unit was profiled with a 83 Ci Co60 source dimensionally identical to the dummy source used in the thermal test (see Appendix B). The source was transferred to the projector using standard loading techniques. This simulated the position of the dummy source in the test. The unit was then profiled. The highest readings were found to be 1.0 to 1.6 mR/hr at one (1) meter at approximately a 45° angle away from the Posilock across the projector. When scaled to the maximum capacity of the unit (110 Ci Co60) this translates to a reading of approximately 2.5 mR/hr at one (1) meter. This is consistent with the pre-test profile readings and shows no significant increase due to the test.

APPENDIX A CALIBRATION RECORDS

APPENDIX B
RADIATION PROFILE DATA SHEETS

APPENDIX C TEST CHECKLISTS AND DATA SHEETS

APPENDIX D
TEST PHOTOGRAPHS

SPECIMEN B198 ON JIG

SPECIMEN B198 ENTERING OVEN

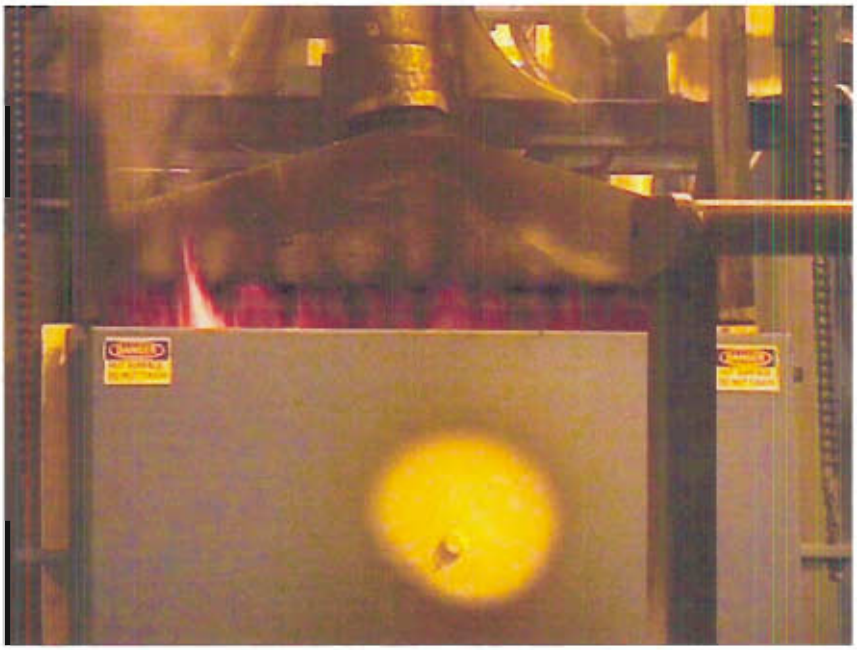

FLAMES FROM SPECIMEN B198 IN OVEN

SPECIMEN B198 BEING REMOVED FROM OVEN

SPECIMEN B198 EXTINGUISHED

SPECIMEN B198 WITH TOP SIDE PLATE OPEN

SPECIMEN B201 AND OVERPACK

SPECIMEN B201 AND OVERPACK ENTERING OVEN

FLAMES FROM SPECIMEN B201 AND OVERPACK

SPECIMEN B201 AND OVERPACK BEING REMOVED

SPECIMEN B201 AND OVERPACK OUT OF OVEN

SPECIMEN B201 AND OVERPACK EXTINGUISHED

SPECIMEN B201 AND OVERPACK EXTINGUISHED

SPECIMEN B201 WITH SIDE PLATE REMOVED

APPENDIX E
THERMAL GRAPHS

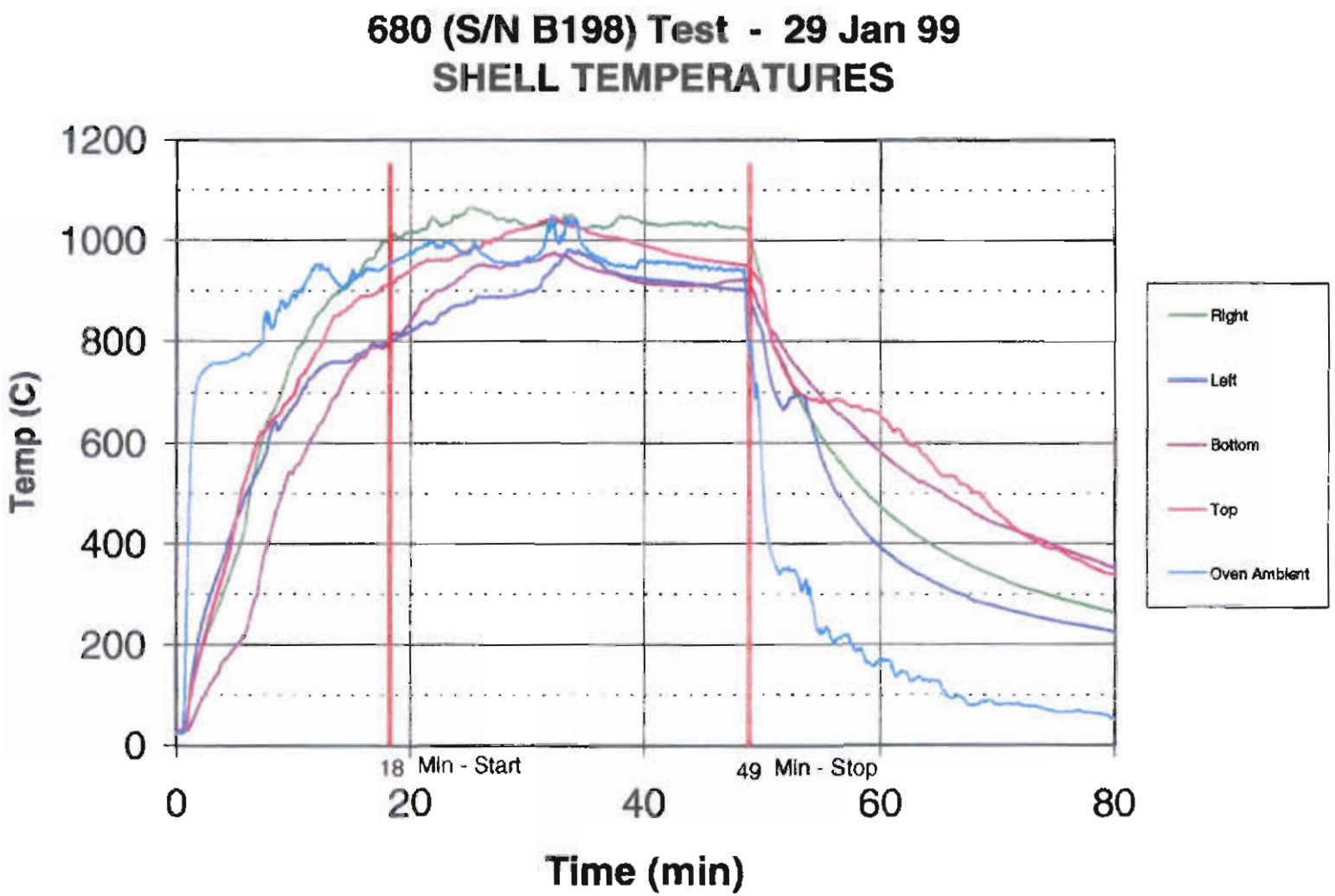
680 (S/N B198) Test - 29 Jan 99
SHELL TEMPERATURES
Temp (C)
1200
1000
800
600
400
200
0
18 Min - Start
49 Min - Stop
0
20
40
60
80
Time (min)
Right
Left
Bottom
Top
Oven Ambient

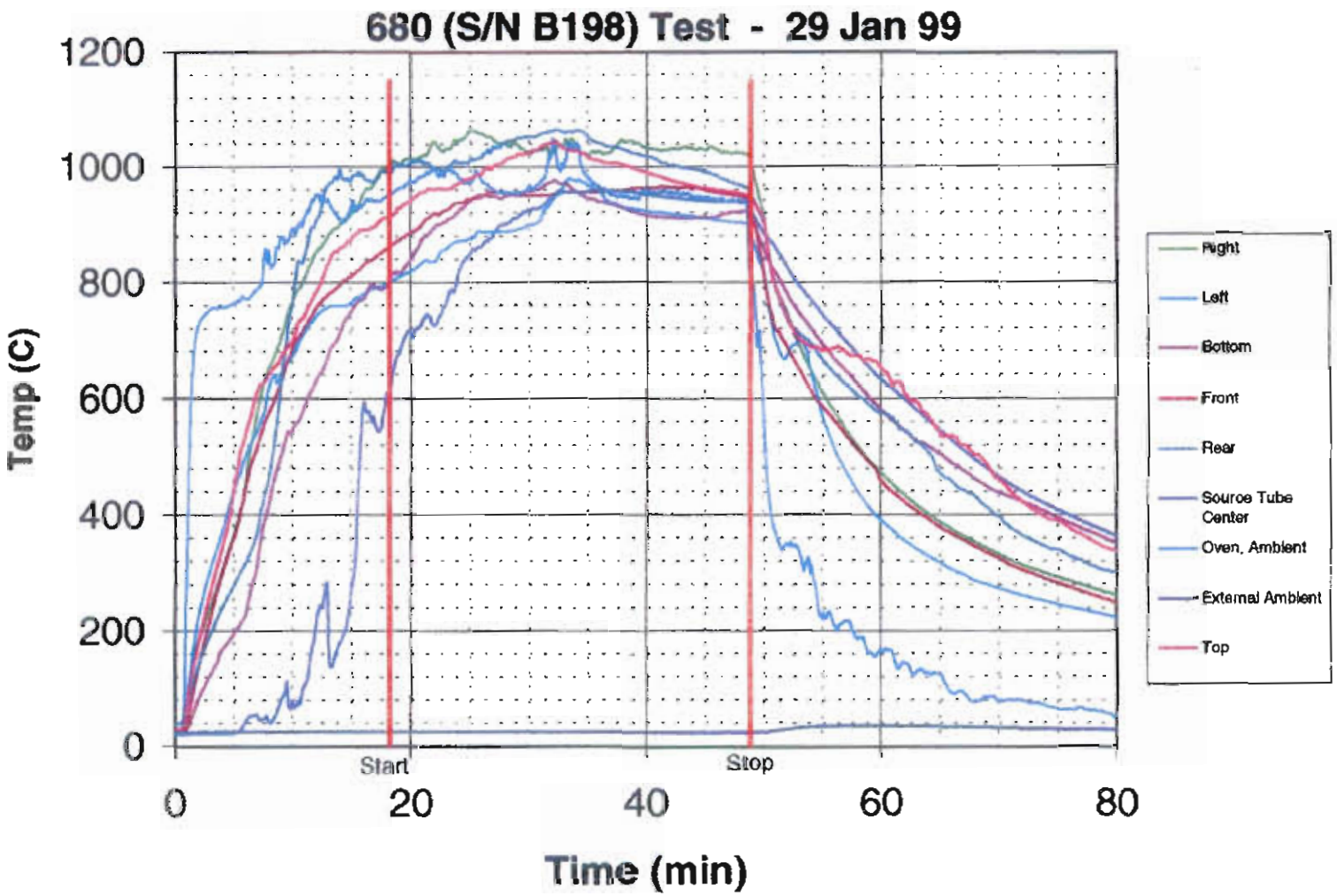
680 (S/N B198) Test - 29 Jan 99
Temp (C)
1200
1000
800
600
400
200
0
Start
Stop
0
20
40
60
80
Time (min)
Right
Left
Bottom
Front
Rear
Source Tube Center
Oven, Ambient
External Ambient
Top

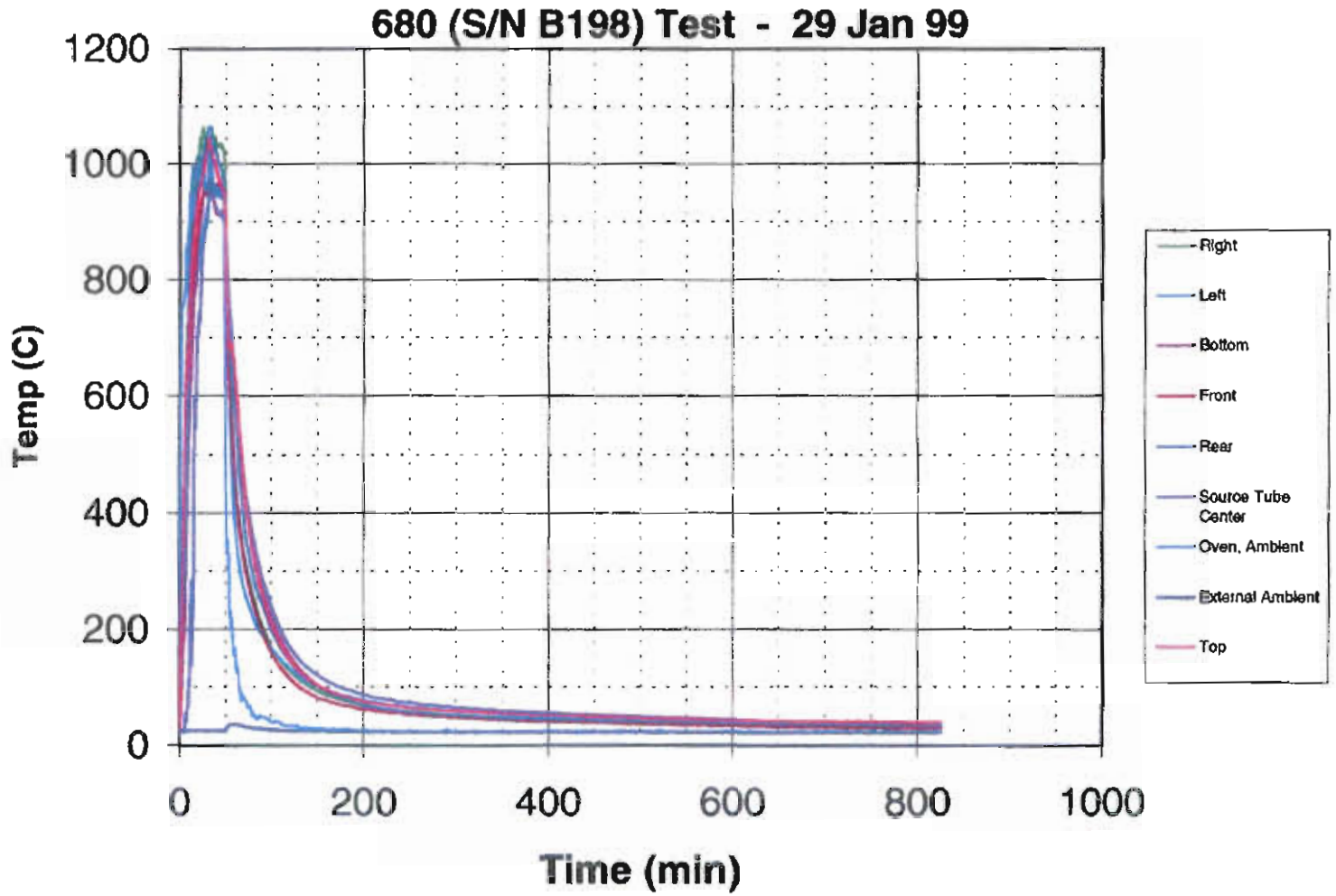
680 (S/N B198) Test - 29 Jan 99
Temp (C)
1200
1000
800
600
400
200
0
0
200
400
600
800
1000
Time (min)
Right
Left
Bottom
Front
Rear
Source Tube Center
Oven, Ambient
External Ambient
Top

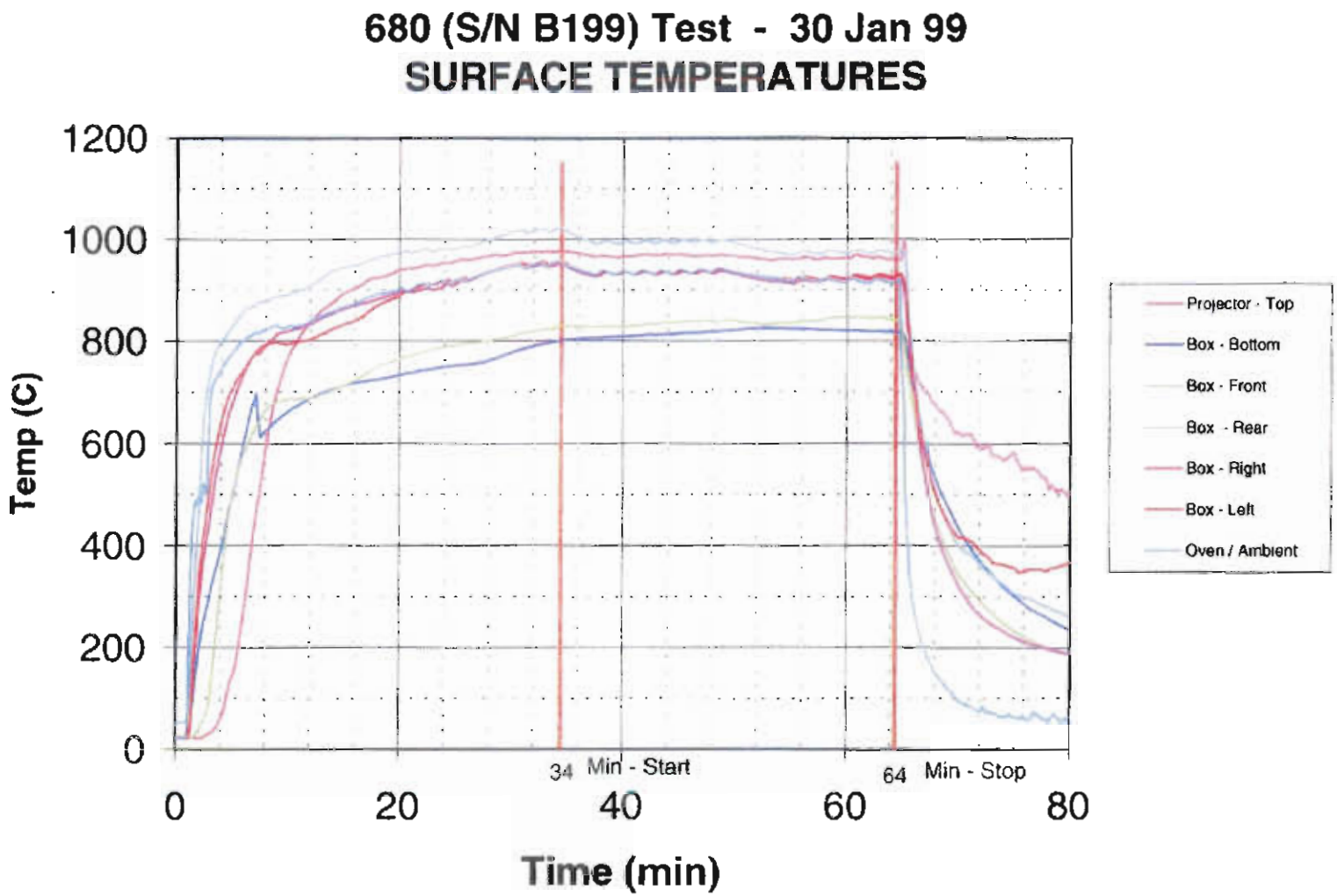
680 (S/N B199) Test - 30 Jan 99
SURFACE TEMPERATURES
Temp (C)
1200
1000
800
600
400
200
0
0
20
40
60
80
Time (min)
34 Min - Start
64 Min - Stop
Projector - Top
Box - Bottom
Box - Front
Box - Rear
Box - Right
Box - Left
Oven / Ambient

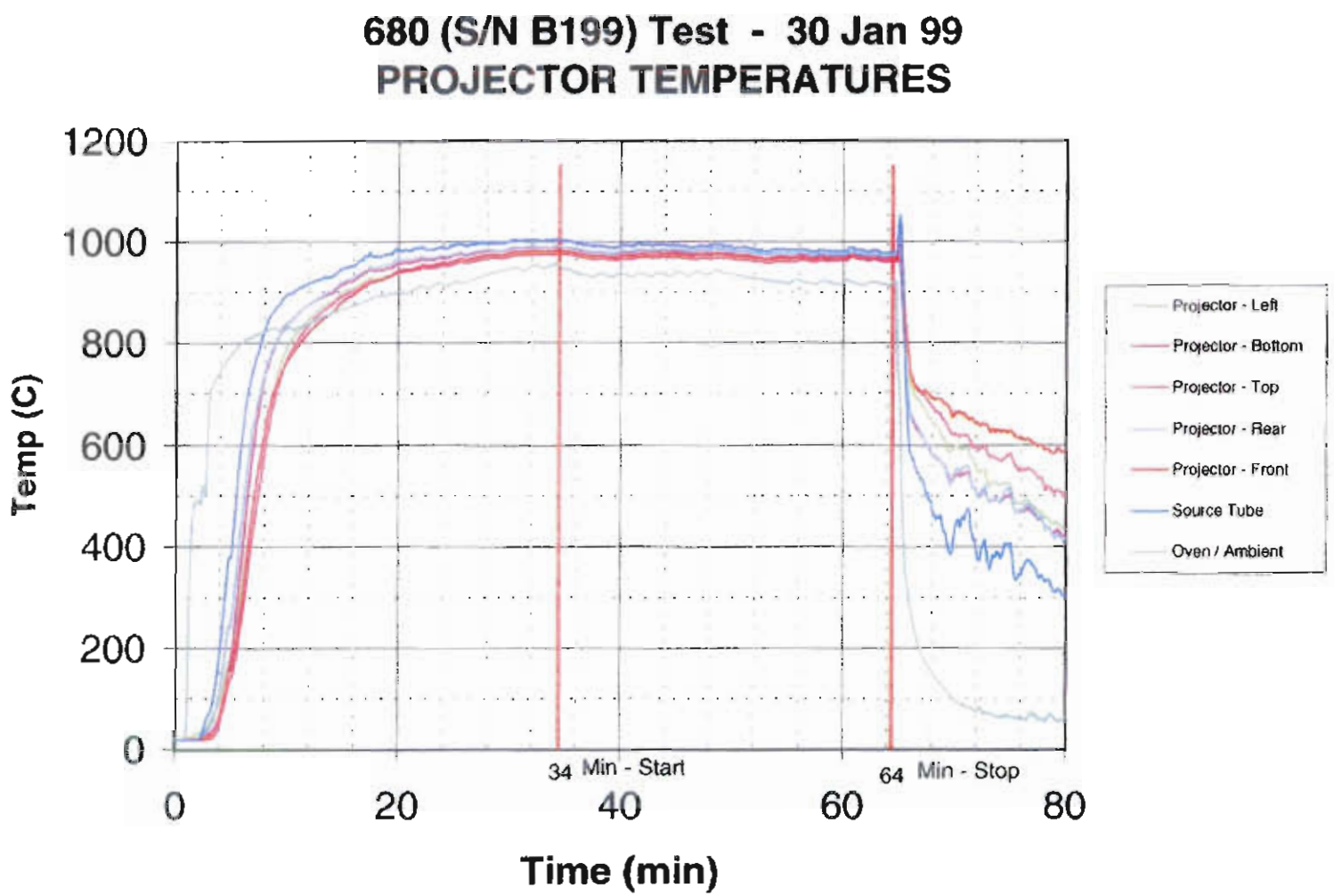
680 (S/N B199) Test - 30 Jan 99
PROJECTOR TEMPERATURES
Temp (C)
1200
1000
800
600
400
200
0
0
20
40
60
80
Time (min)
34 Min - Start
64 Min - Stop
Projector - Left
Projector - Bottom
Projector - Top
Projector - Rear
Projector - Front
Source Tube
Oven / Ambient

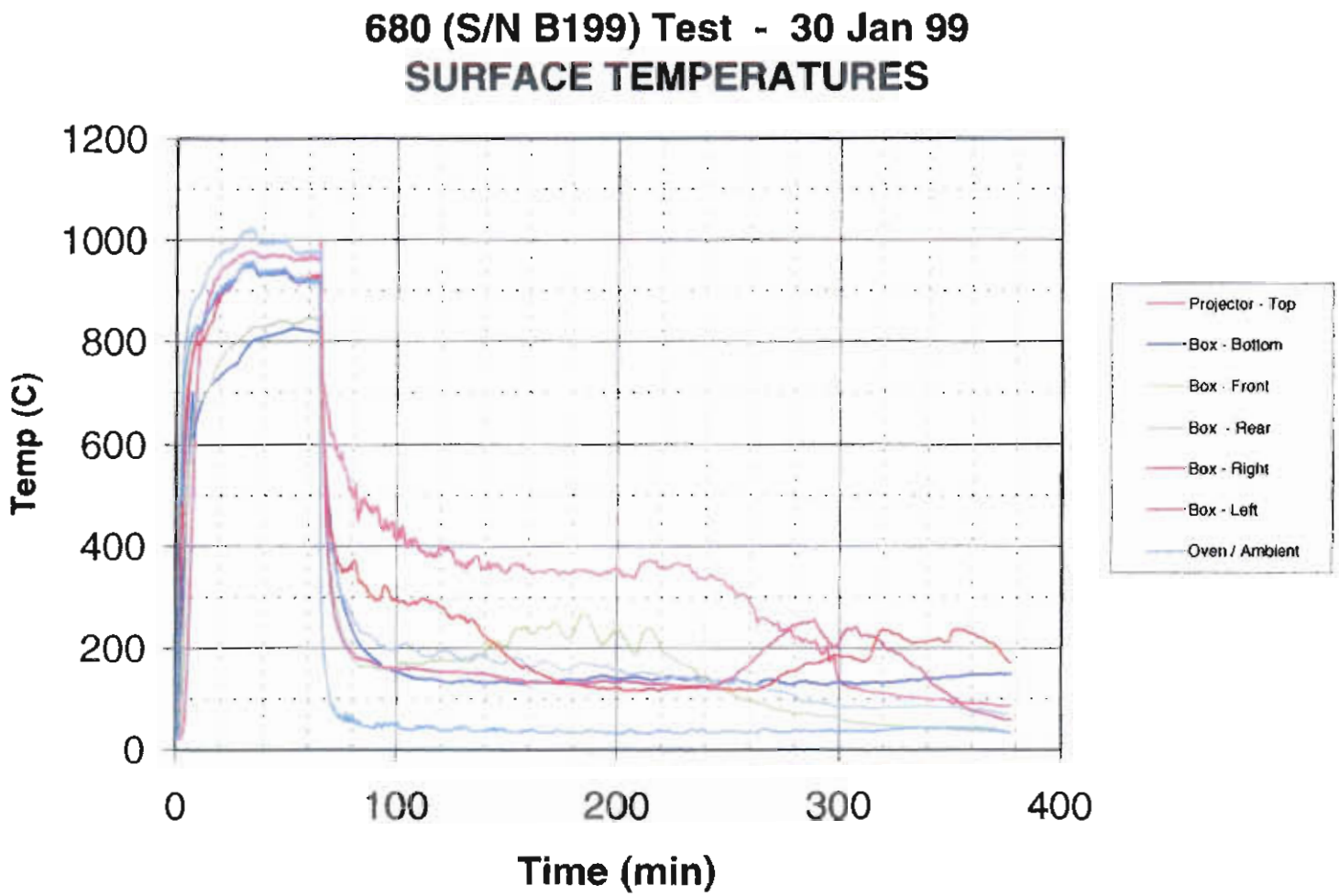
680 (S/N B199) Test - 30 Jan 99
SURFACE TEMPERATURES
Temp (C)
1200
1000
800
600
400
200
0
0
100
200
300
400
Time (min)
Projector - Top
Box - Bottom
Box - Front
Box - Rear
Box - Right
Box - Left
Oven / Ambient

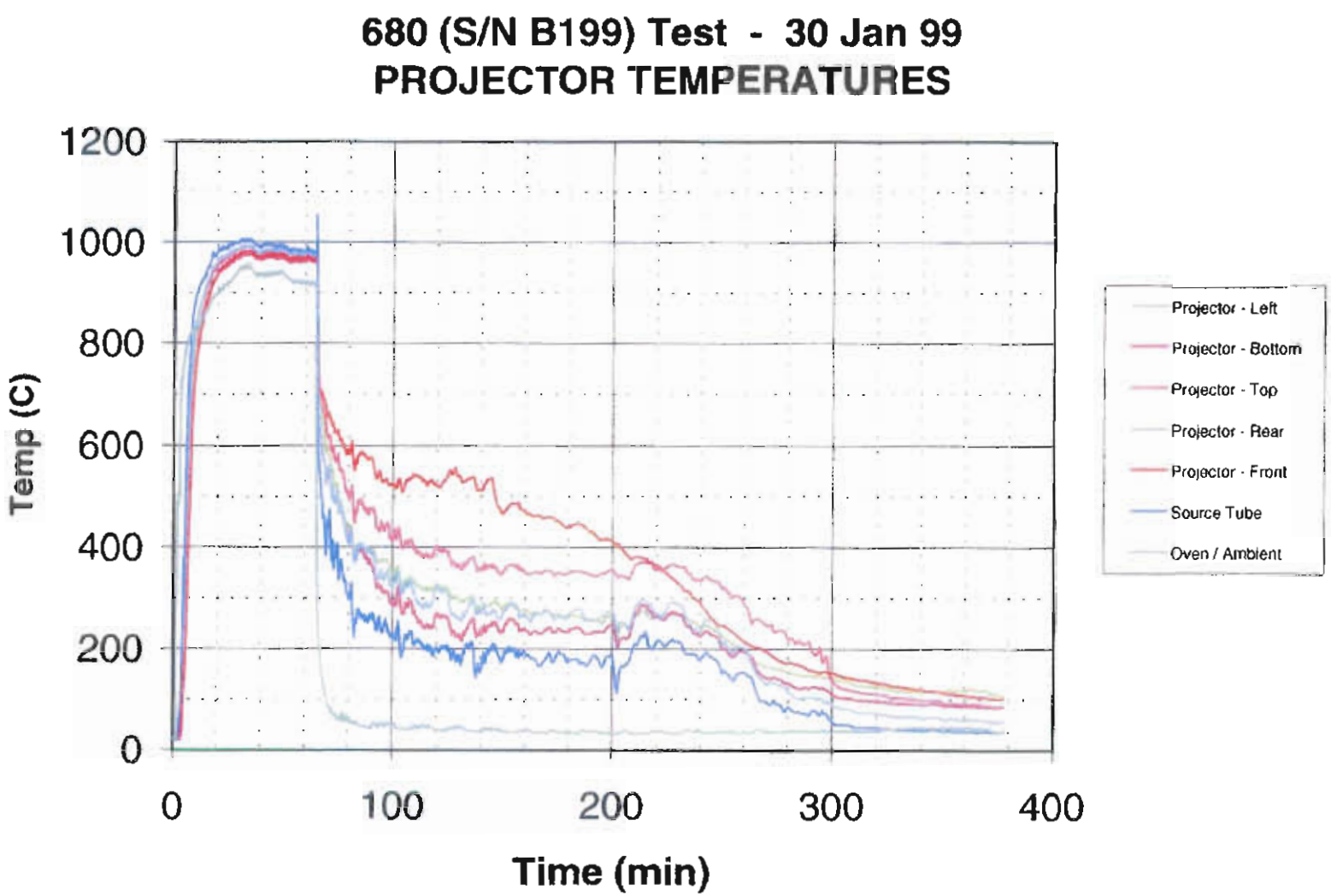
680 (S/N B199) Test - 30 Jan 99
PROJECTOR TEMPERATURES
Temp (C)
1200
1000
800
600
400
200
0
0
100
200
300
400
Time (min)
Projector - Left
Projector - Bottom
Projector - Top
Projector - Rear
Projector - Front
Source Tube
Oven / Ambient

2.12.6 Test Plan Report 80 dated June 1999 (Minus Manufacturing Records)

AEA TECHNOLOGY

TEST PLAN NO. 80 REV. 1

TEST PLAN COVER SHEET

TEST TITLE: TEST PLAN 80, REVISION 1, MODEL 650L SOURCE CHANGER TYPE B TRANSPORT TESTS

PRODUCT MODEL: 650L

ORIGINATED BY: (MPR)	DATE: 12 MAR 99

TEST PLAN REVIEW

ENGINEERING APPROVAL:	DATE: 12 MAR 99
QUALITY ASSURANCE APPROVAL: Daniel W. Kurtz	DATE: 12 Mar 99
REGULATORY APPROVAL: Catherine Ronfan	DATE: 12 Mar 99

COMMENTS:

TEST RESULTS REVIEW

ENGINEERING APPROVAL:	DATE: 17 JUL 99
QUALITY ASSURANCE APPROVAL: Daniel W. Kurtz	DATE: 13 Jul 99
REGULATORY APPROVAL: C. Ronfan	DATE: 13 Jul 99

SENTINEL

TEST PLAN 80 REPORT

MODEL 650L

June 1999

Prepared By: Laura Ridzon Date: 28 JUN 99
Laura Ridzon, MPR Associates, Inc.

Reviewed By: Nicholas J. Marrone Date: 28 June 99
Nicholas J. Marrone, MPR Associates, Inc.

Approved By: Caroline S. Schlaseman Date: 28 JUN 99
Caroline S. Schlaseman, MPR Associates, Inc.

AEA Technology QSA, Inc.
Burlington, MA

TABLE OF CONTENTS

1. PURPOSE 1
2. SCOPE OF TESTING 2
3. FAILURE MODES 3
4. TEST UNIT DESCRIPTION 4
5. SUMMARY AND CONCLUSIONS 5
6. TP80 NORMAL TESTS 8
   Compression Test 8
   Penetration Test 9
   1.2 Meter (4 Foot) Drop Test 10
   Post-Test Inspection and Assessment 12
7. TP80 ACCIDENT DROP TESTS – TP80(A) 13
   9 Meter (30 Foot) Drop Test 13
   Puncture Test 14
   Post-Test Inspection and Assessment 14
8. TP80 ACCIDENT DROP TESTS – TP80(B) 15
   9 Meter (30 Foot) Drop Test 15
   Puncture Test 16
   Post-Test Inspection and Assessment 16
9. TP80 ACCIDENT DROP TESTS – TP80(C) 17
   9 Meter (30 Foot) Drop Test 17
   Puncture Test 18
   Post-Test Inspection and Assessment 18
10. TP80 THERMAL TEST – TP80(B) 19
   Orientation and Setup 19
   Test Chronology 20
   Post-Test Inspection and Assessment 21

APPENDICES

A. **CALIBRATION RECORDS**

B. **MANUFACTURING ROUTE CARDS AND PRE-TEST RADIATION PROFILE DATA SHEETS**

C. **TEST CHECKLISTS AND DATA SHEETS**

D. **TEST PHOTOGRAPHS**

1. PURPOSE

This report describes the Type B test results for the Model 650L source changer. These tests were performed in accordance with Test Plan 80 and were conducted March 15 through 20, 1999. The Test Plan specified testing necessary to demonstrate compliance with the requirements in 10 CFR Part 71 and IAEA Safety Series No. 6 (1985 as amended 1990) for "Normal Conditions of Transport" and "Hypothetical Accident Conditions." Evaluation of the compliance of the Model 650L with these requirements is provided in the Safety Analysis Report (SAR).

2. SCOPE OF TESTING

Test Plan 80 identified three orientations that could potentially cause the most significant damage to the Model 650L source changer in the 9 meter (30 foot) drop tests. Therefore, the test plan required three test specimens. Each of these test specimens was subjected to the tests described below.

1. Normal Conditions of Transport Tests per 10 CFR 71.71, including the following for each test specimen:

   a) Compression test, with the test specimen under a load greater than or equal to five times the Model 650L maximum weight for at least 24 hours.

   b) Penetration test, in which a 13.4 lb (6.08 kg) penetration bar is dropped from at least 1 meter (40 inches) onto the test specimen in the most vulnerable location.

   c) 1.2 meter (4 foot) drop test, in which the test specimen is dropped in an orientation expected to cause maximum damage.

   Water spray preconditioning of the test specimens prior to testing was not required in the test plan and is evaluated separately.

2. Hypothetical Accident Condition Tests per 10 CFR 71.73, including the following for each of the test specimens:

   a) 9 meter (30 foot) drop test, in which the test specimen is dropped in an orientation expected to cause maximum damage.

   b) Puncture test, in which the test specimen is dropped from at least 1 meter (40 inches) onto a 6 inch (152.4 mm) diameter vertical bar in an orientation expected to compound damage from the 9 meter (30 foot) drop test.

   c) Thermal test, in accordance with 10 CFR71.73(c)(4), in which the test specimen is exposed for 30 minutes to an environment which provides a time-averaged environmental temperature of at least 800°C (1472°F), and an emissivity coefficient of at least 0.9. For the Model 650L, the test plan specified that the thermal test would be performed for only one of the three test specimens, unless other test units suffered significant damage in the drop and puncture tests. This requirement was based on the evaluation of the construction of the unit, and on the potential failure modes, which are discussed in the following section.

   The crush test specified in 10 CFR 71.73(c)(2) was not required because the source capsules are qualified as Special-Form radioactive material.

   The water immersion test specified in 10 CFR 71.73(c)(6) and other tests specified in 10 CFR 71 are evaluated separately.

   For all tests, sufficient margin was included in test parameters to account for measurement uncertainty. These test parameters included test specimen weight, temperature, and drop height.

3. FAILURE MODES

For the Model 650L source changer, the key function important to safety is the positive retention of the radioactive source in its stored position within the depleted uranium shield. Displacement of either the source or the shield from the design position or failure of the shield could cause radiation from the package to increase above regulatory limits. Mechanisms, which could cause these modes of failure, include:

- Oxidation of the DU Shield - During the thermal test, oxidation of the DU shield could lead to reduced shielding effectiveness and higher radiation exposure. This could occur if failure of the inner and outer shells or failure of the through-bolts during drop testing results in a large, open path to the DU shield.

- Source Pull-Out from the Shield - During drop testing or during the thermal test, source pull-out could lead to higher radiation exposure. This could occur if there is significant relative displacement between the shield and the lock assembly on the top cover plate. Such displacement could occur if the top plate is deformed outward, and the shield moves laterally or downward through the polyurethane foam.

The drop orientations for the normal and hypothetical accident tests were selected to challenge the components that are intended to prevent these failures. For the 1.2 meter (4 foot) and 9 meter (30 foot) drop tests, these orientations include the following:

- Horizontal with the long side of the unit down - This orientation could cause movement of the shield or failure of the inner and/or outer shells.
- Vertical upside down - This orientation could cause deformation of the top plate, failure of the through-bolts, or failure of the lock assembly which would all lead to source pull-out from the shield. Additionally, movement of the shield through the foam in the upper part of the unit would put a large lateral load on the upper portion of the inner shell, which is subject to brittle failure.
- Top corner down - This orientation could cause failure of the bolts holding the protective lid in place, exposing the lock assembly to damage during the puncture test. This orientation also loads the through-bolts, top plate, and inner shell similar to the vertical upside down orientation.

Because of the potential for brittle failure of carbon steel components, all test units were packed in dry ice and cooled to less than -40°C (-40°F) (the minimum temperature required by IAEA Safety Series 6) for the penetration, 1.2 meter (4 foot) drop, 9 meter (30 foot) drop, and puncture tests.

In selecting test units for the thermal test, it was concluded that an undamaged unit would not be significantly affected by exposure to the conditions of the thermal test. In particular, for an undamaged unit, the depleted uranium shield would still be completely enclosed within the inner and outer shells and be supported by foam and a shim of either copper, steel, or lead. Under the thermal test conditions, degradation of the foam and melting of the shim, if it is lead, will allow

the shield to move by a small amount. This could result in limited movement of the source relative to the shield, but not enough to significantly increase radiation levels.

Therefore, the thermal test is only expected to have a significant effect on those units which sustained damage relating to the two modes of failure described above, specifically: (1) an opening in the inner and outer shells to allow oxidation of the shield, or (2) relative displacement of the lock assembly and shield which could be compounded by shield movement during the thermal test. Since relative displacement of the lock assembly was expected in the vertical upside down drop orientation, it was planned to perform the thermal test with the unit dropped in this orientation. The test plan required thermal tests of the other test specimens only if they sustained damage that could lead to failure during the thermal test.

4. TEST UNIT DESCRIPTION

The Model 650L test specimens, identified below, were originally constructed in accordance with drawing C65009 and were prepared for testing in accordance with drawing R-TP80, Rev. E. The manufacturing route cards for the units document the compliance of these units with the AEA Technology QSA Inc. QA program (see Appendix B).

Specimen	Serial No.	Total Weight	Lead Configuration
TP80(A)	2243	80.0 lb (36.3 kg)	No lead between DU shield and long side of inner shell.
TP80(B)	182	83.6 lb (37.9 kg)	Thickest lead under DU shield (total 3/8" thick).
TP80(C)	195	89.0 lb (40.4 kg)	Any location.

Important features of the test unit construction include the following:

- The configuration of lead added to each unit for supplemental shielding was specified as shown above to provide the worst case for the each drop orientation.
- For TP80(B), the original steel shim used in the unit was replaced with a solid 3/8" thick lead shim.
- The original carbon steel through-bolts were replaced with stainless steel bolts.
- The original carbon steel lid bolts were replaced with high strength, strain hardened stainless steel bolts.
- The weights of the test specimens are representative of the heaviest 650L units in use. The range of weights of 650L units is 75 lb to 90 lb (34.0 kg to 40.8 kg).

The test specimens were radiographed to document the lead configuration and the position of the internal components. Also, the position of the "dummy" source used in the units was measured prior to testing.

5. SUMMARY AND CONCLUSIONS

All test specimens met the requirements for 10 CFR 71 Type B(U) Transport Testing, as shown in the following table of Radiation Profile results.

Specimen	Specimen Surface	At Surface, Before Test	At One Meter, Before Test	At Surface, After 4 ft Drop Test	At One Meter, After 4 ft Drop Test	At One Meter, After Final Test (Notes 1,2)
	Reg. Limits	200 mR/hr	10 mR/hr	200 mR/hr	10 mR/hr	1000 mR/hr
TP80(A)	Top	84	3.2	94	2.4	2.7
	Right	47	0.6	47	0.7	0.8
S/N 2243	Front	88	0.7	89	0.8	1.0
	Left	56	0.6	65	0.7	0.7
	Rear	74	0.7	89	0.8	0.9
	Bottom	51	0.4	94	0.7	0.6
TP80(B)	Top	60	3.1	71	2.0	28
	Right	56	0.4	53	0.6	5.6
S/N 182	Front	84	0.8	83	0.8	5.6
	Left	88	0.6	83	0.6	7.9
	Rear	79	0.8	77	0.8	7.9
	Bottom	74	0.5	83	0.7	1.1
TP80(C)	Top	72	2.2	59	2.0	2.2
	Right	105	0.7	71	0.7	0.9
S/N 195	Front	50	0.6	47	0.5	0.6
	Left	127	0.7	106	0.8	1.0
	Rear	50	0.6	53	0.6	0.6
	Bottom	61	0.6	59	0.5	0.5

Notes:

1. The final Hypothetical Accident Condition test for test specimens TP80(A) and TP80(C) was the Puncture Test. The final test for specimen TP80(B) was the Thermal Test.
2. Radiation profile at the surface is not required for the Hypothetical Accident Condition test (see 10 CFR 71.51(a)(2)).

Results of each test are summarized in the table below, in the sequence in which the tests were completed. Detailed results are provided in the following sections of this report, test data sheets are in Appendix C, and photographs are included in Appendix D.

Specimen	Test Performed	Test Results (Note 1)
TP80(A)	Compression Test	No damage
	1 meter (40 inch) penetration bar on side	Impact mark; no visible damage
	1.2 meter (4 foot) drop, horizontal on long side	• Impact mark on edge of plates • Small change in radiation profile
	9 meter (30 foot) drop, horizontal on long side	Bent bottom plate flange inward
	1 meter (40 inch) puncture, horizontal on long side (dropped twice to ensure specimen temperature was below-40°C (-40°F))	Shallow dent on outer shell at impact point
	Post-Drop Inspection	• Lid secured in place • Locks undamaged; source secured • No significant change in source position • Small change in radiation profile
TP80(B)	Compression Test	No damage
	1 meter (40 inch) penetration bar on side	Impact mark; no visible damage
	1.2 meter (4 foot) drop, vertical upside down	• Impact mark on top of lid • Small change in radiation profile
	9 meter (30 foot) drop, vertical upside down	• Outer shell split open from top to bottom • Inner shell cracked, creating a 3 inch (76.2 mm) high by 0.5 inch (12.7 mm) wide opening • Small upward deflection of top plate • Top and bottom plates remained secured by the through bolts.
	1 meter (40 inch) puncture on crack in shell	Bent shell inward slightly in area of crack

Specimen	Test Performed	Test Results (Note 1)
TP80(B) (con't)	Post-Drop Inspection	• Lid secured in place • Locks undamaged; source secured • Top plate deflection at center about 0.16 inch (4.1 mm). • No damage to through bolts • No significant change in source position. • Outer and inner shells cracked; opening about 3 inch (76.2 mm) by 0.5 inch (12.7 mm).
	Thermal test	• Some oxidation of DU shield near crack in shell • Shield moved down (as expected) • Polyurethane foam burned off, exposing the shield • Some oxidation of shield near crack in shell • Shield self-extinguished after removal from oven • Source pullout less than 0.5 inch (12.7 mm). • Max. radiation level at one meter was 28 mR/hr (which is much less than 1000mR/hr allowable)
TP80(C)	Compression Test	No damage
	1 meter (40 inch) penetration bar on side	Impact mark; no visible damage
	1.2 meter (4 foot) drop on top edge of lid	• Bent corner of lid and cracked top plate of lid (brittle failure) • Small change in radiation profile
	9 meter (30 foot) drop on top edge of lid	• Increased lid top plate crack length in vicinity of impact point • Locks still protected by lid
	1 meter (40 inch) puncture vertical upside down on lid and on underside of top plate	Broke inside of lid top plate (locks still protected)
	Post-Drop Inspection	• Locks undamaged; source secured • No significant change in source position • Small change in radiation profile

Note 1: None of the new stainless steel bolts installed in the test specimens failed.

Specimen TP80(A) was not significantly damaged in the testing. On specimen TP80(C), the top plate of the protective lid was substantially cracked and portions broke away; however, the rectangular tube section which surrounds the locks was undamaged and still attached to the lower portion which in turn was secured to the body of the changer. As such, the locks remained protected. The post-test radiation profiles showed a slight increase in radiation levels for these units, but these radiation levels were well below the allowable values.

The only significant damage to any unit was the cracked shell in specimen TP80(B). Because of this crack, the depleted uranium shield was exposed to air during the thermal test, and portions of the shield near the crack opening were oxidized. In addition, after the lead shim melted, the shield was free to move downward, pulling the dummy source out of its fully inserted position in the shield. However, even with the oxidized shield and source pull-out, the post-test radiation profile showed a maximum radiation level of 28 mR/hr at one meter. This is well below the maximum allowable level of 1,000 mR/hr at one meter following the hypothetical accident conditions.

6. TP80 NORMAL TESTS

Compression Test

All three test specimens were loaded as shown in the figure below. Lead weights were placed on a steel plate, which was positioned on top of each test specimen.

The vertical projected area of the unit is 8.25 inch (209 mm) x 10 inch (254 mm) or 82.5 square inches (531 square centimeters), yielding a total load of 165 lb (74.8 kg) for an applied pressure of 2 psi. Since the maximum weight of the Model 650L source changer is 90 lb (40.8 kg), a load of 5 times the weight, or 450 lb (204 kg), is more conservative. The total compressive load actually used was 458 lb to 462 lb (208 kg to 210 kg).

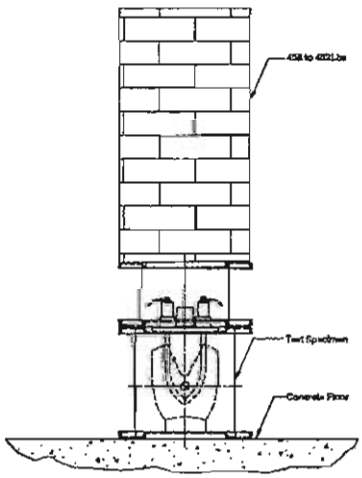

Compression Test Orientation – All Specimens

After a period of 24 hours, the weights were removed. No visible deformation or buckling occurred and no other damage was observed for any of the test specimens.

Penetration Test

The three test specimens were subjected to the penetration test. Temperature readings taken just before the test are summarized below.

Specimen	Ambient	Surface	Internal
TP80(A)	10°C (50°F)	-96°C (-141°F)	-95°C (-139°F)
TP80(B)	9°C (48°F)	-93°C (-135°F)	-83°C (-117°F)
TP80(C)	10°C (50°F)	-90°C (-130°F)	-90°C (-130°F)

The penetration bar target was the side of the unit in an attempt to damage the shell. For this test, each specimen was positioned with its horizontal long side down, as shown below.

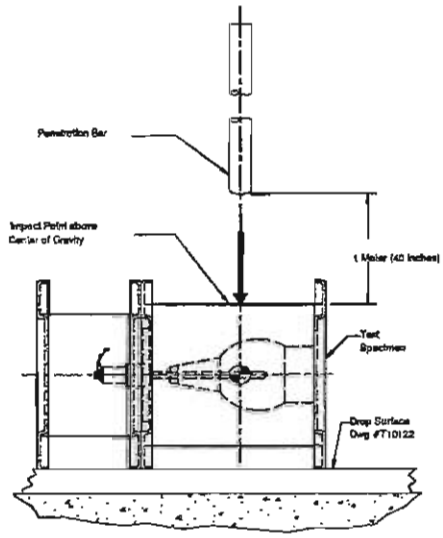

Penetration Test Orientation – All Specimens

The penetration bar was dropped from a height of at least 1 meter (40 inches) above the impact point. The bar hit as intended on each package, leaving a visible impact mark, but no other damage.

1.2 Meter (4 Foot) Drop Test

The three test specimens were then subjected to the 1.2 meter (4 foot) drop test. Temperature readings taken just before the test are summarized below.

Specimen	Ambient	Surface	Internal
TP80(A)	13°C (55°F)	-92°C (134°F)	-90°C (-130°F)
TP80(B)	13°C (55°F)	-87°C (-125°F)	-89°C (-128°F)
TP80(C)	13°C (55°F)	-95°C (-139°F)	-92°C (-134°F)

The drop orientations for each unit are shown below and on the next page. These orientations are the same as those used for each specimen in the 9 meter (30 foot) drop tests.

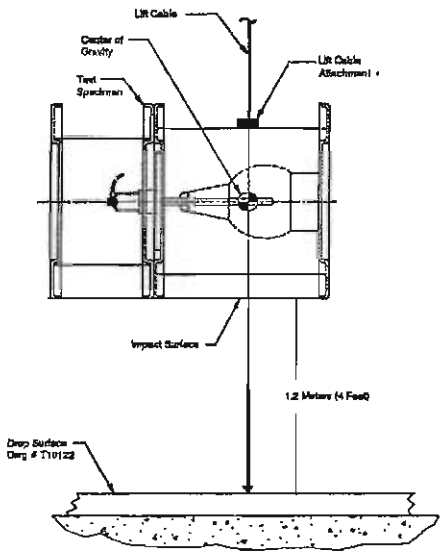

1.2 Meter (4 Foot) Drop Orientation for Specimen TP80(A)

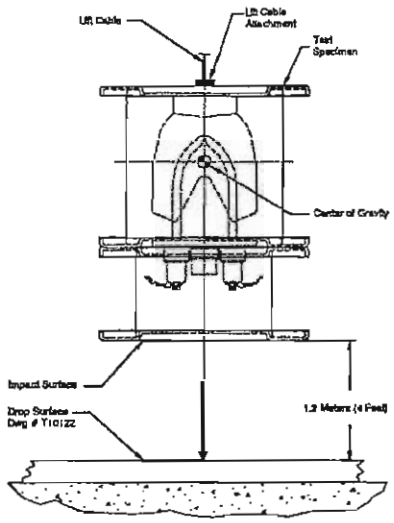

1.2 Meter (4 Foot) Drop Orientation for Specimen TP80(B)

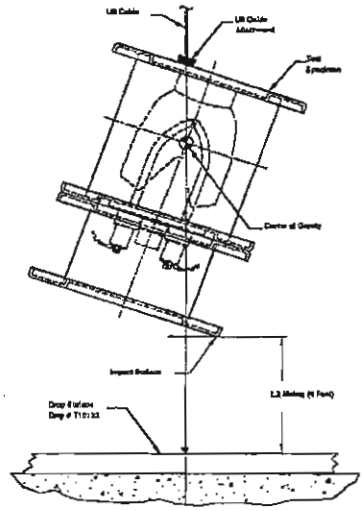

1.2 Meter (4 Foot) Drop Orientation for Specimen TP80(C)

Each test specimen impacted as intended. Visual inspections showed impact marks but no significant damage to either TP80(A) or TP80(B). For TP80(C), a 2 inch (50.8 mm) long crack in the top of the protective lid was observed, and the flange corner was bent.

Post-Test Inspection and Assessment

Results of the first intermediate inspections and assessments are summarized below. The radiation profile of each specimen was measured, and data sheets are provided in Appendices B and C.

Specimen	Damage	Source Movement	Radiation Profile (Note 1)
TP80(A)	No visible damage, locks functional	No significant change observed	Largest change at bottom surface: 51mR/hr to 94 mR/hr (Note 2)
TP80(B)	No visible damage, locks functional	No significant change observed	Largest change at top surface: 60 mR/hr to 71 mR/hr
TP80(C)	Cracked top lid, locks functional	No significant change observed	Largest change at rear surface: 50 mR/hr to 53 mR/hr

Note 1: Radiation levels at one meter were 2.4 mR/hr or less after Normal Condition Tests.

Note 2: All other surfaces measured remained essentially the same, exhibiting no corresponding shift in radiation levels. Additionally, no source movement was measured. Therefore, this change was considered insignificant.

7. TP80 ACCIDENT DROP TESTS – TP80(A)

Specimen TP80(A) was subjected to a 9 meter (30 foot) drop test and a puncture test in accordance with Test Plan 80. The results are described below.

9 Meter (30 Foot) Drop Test

Just before the drop test, thermocouple readings for Specimen TP80(A) were as follows:

- Internal (source tube): -93°C (-135°F)
- Surface (shell): -92°C (-134°F)

The orientation for Specimen TP80(A), shown below, was the same as for the 1.2 meter (4 foot) drop. The intention was to cause the shield to move relative to the lock assembly and/or to cause failure of the inner and outer shells.

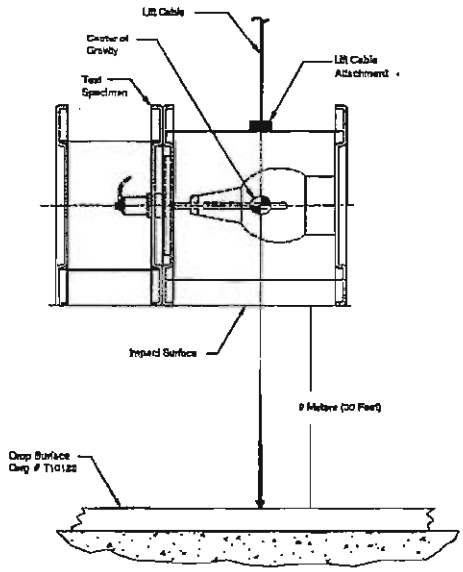

9 Meter (30 Foot) Drop Orientation for Specimen TP80(A)

The package rotated very slightly causing the edge of the bottom plate to impact first. However, the impact was sufficiently close to ideal as to impart the desired force into the package. Visual inspections showed that the edge of the bottom plate had bent inward to the point where it contacted and dented the outer shell. The edge of the top plate of the lid also bent inward slightly.

Puncture Test

For the puncture test, TP80(A) was dropped, as planned, on its side with the center of gravity over the impact area, as shown below. The intention of this orientation was to inflict further damage to the shell. The thermocouple reading on the surface of the unit before the puncture test was -69°C (-92°F) but warmed to -26°C (-15°F) just after the test due to delays in rigging the unit for the drop. Consequently, the unit was cooled again and dropped a second time. For the second test, the surface temperature was -46°C (-51°F) before the test and -42°C (-44°F) after the test.

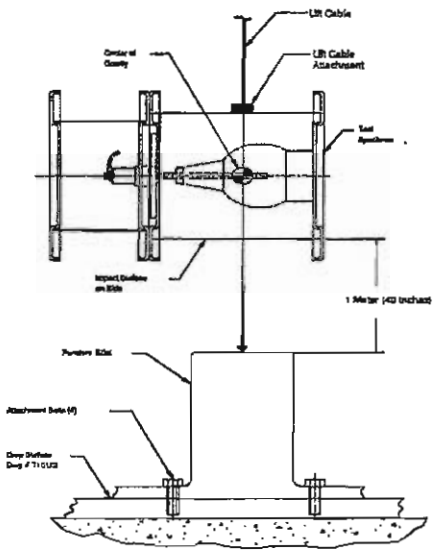

Puncture Drop Orientation for Specimen TP80(A)

For both drops, the unit impacted on its side as intended. Each impact caused the side of the shell to deform inward slightly, but no significant damage was observed.

Post-Test Inspection and Assessment

Following the test, the protective lid was removed and the unit was inspected. No damage to the lock assembly was observed, and no significant source movement was measured. Radiographs of the unit showed no discernable change in the position of the shield. The post-test radiation profile showed no significant change in radiation levels from the pre-test profile (see Appendices B and C). Because no significant damage occurred to the unit, the thermal test was not considered necessary (see Section 3). In addition, Specimen TP80(B) was considered worst case.

8. TP80 ACCIDENT DROP TESTS – TP80(B)

Specimen TP80(B) was subjected to a 9 meter (30 foot) drop test and a puncture test in accordance with Test Plan 80. The results are described below.

9 Meter (30 Foot) Drop Test

Just before the drop test, thermocouple readings for Specimen TP80(B) were as follows:

- Internal (source tube): -94°C (-137°F)
- Surface (shell): -93°C (-135°F)

The package orientation for Specimen TP80(B), shown below, was the same as for the 1.2 meter (4 foot) drop. The intention was to cause deformation of the top plate, failure of the through-bolts, and failure of the lock assembly, leading to source pull-out from the shield.

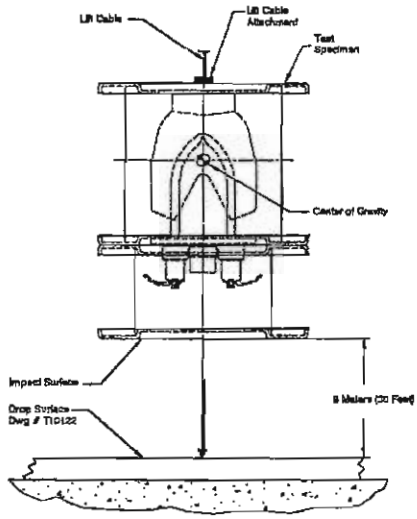

9 Meter (30 Foot) Drop Orientation for Specimen TP80(B)

The package impacted as intended. The impact caused the depleted uranium shield to move into the foam below the top plate, putting a large lateral load on the inner shell, and causing the shell to crack. The cracking of the inner shell resulted in a transfer of the lateral load to the outer shell, breaking the spot welds that hold the outer shell together. The outer stainless steel wrap also failed and sprung open. One of the rivnuts in the top plate broke, but its associated bolt and the all the other lid bolts were undamaged and the lid remained secured to the package.

Puncture Test

For the puncture test, the planned orientation was changed in order to inflict the greatest damage, based on the on-site assessment of Engineering, Regulatory and QA. As such, TP80(B) was dropped so that the cracked shell was aligned with the top edge of the puncture bar. The intention was to open up the crack or cause additional cracking in the damaged area. The thermocouple reading on the outside surface of the unit was -57°C (-71°F) before the puncture test and -44°C (-47°F) after the test.

The unit impacted directly on the crack. The outer shell was deformed inward at the impact area, but additional cracking was not observed.

Post-Test Inspection and Assessment

Following the test the protective lid was removed and the unit was inspected. The through-bolts were all intact. One of the locks had broken out, but the dummy source remained securely retained (i.e., the lock slide was still secure). The top plate (with the lock assembly) deflected outward by about 0.16 inch (4.1 mm). The resulting source pull-out was measured to be 0.027 inch (0.69 mm) in one side and 0.064 inch (1.6 mm) in the other side. Radiographs showed the crack in the inner shell extended from the top plate to the bottom plate.

9. TP80 ACCIDENT DROP TESTS – TP80(C)

Specimen TP80(C) was subjected to a 9 meter (30 foot) drop test and a puncture test in accordance with Test Plan 80 and results are described below.

9 meter (30 Foot) Drop Test

Just before the drop test, thermocouple readings for Specimen TP80(C) were as follows:

- Internal (source tube): -97°C (-143°F)
- Surface (shell): -98°C (-144°F)

The package orientation for Specimen TP80(C), shown below, was the same as for the 1.2 meter (4 foot) drop. The intention was to fail the bolts holding the protective lid to the rest of the unit. This would expose the lock assembly to further damage during the puncture test.

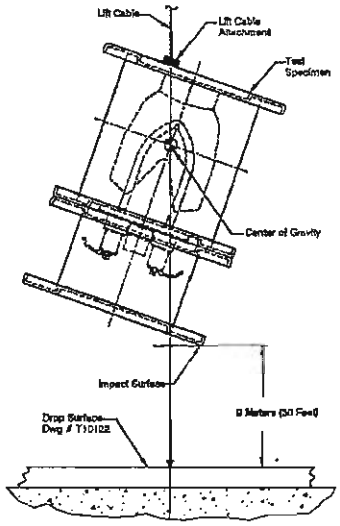

9 Meter (30 Foot) Drop Orientation for Specimen TP80(C)

The package impacted as intended. Visual inspections showed that none of the lid bolts failed, but the lid crack initiated in the 1.2 meter (4 foot) drop increased in both directions. The crack went around the top plate at its interface with the rectangular tube section that protects the locks. The crack went about halfway around the lid, and the top plate was deflected downward about 0.5 inch (13 mm). Portions of the top plate flange also broke off.

Puncture Test

Specimen TP80(C) was subjected to two puncture tests. An additional puncture drop was added as two possible orientations were deemed "worst case". In the first test, the unit was dropped vertically upside down, with the intention of breaking through the lid and damaging the locks. The thermocouple reading on the surface of the unit was -53°C (-63°F) before the puncture test and -50°C (-58°F) after the test.

For the second test, the unit was dropped such that the impact was on the underside of the top plate, as shown below. The objective of this drop was to damage the rivnuts, which hold the lid to the top plate, and to pry the top plate off of the unit by overloading the through-bolts. The initial surface temperature was -47°C (-53°F).

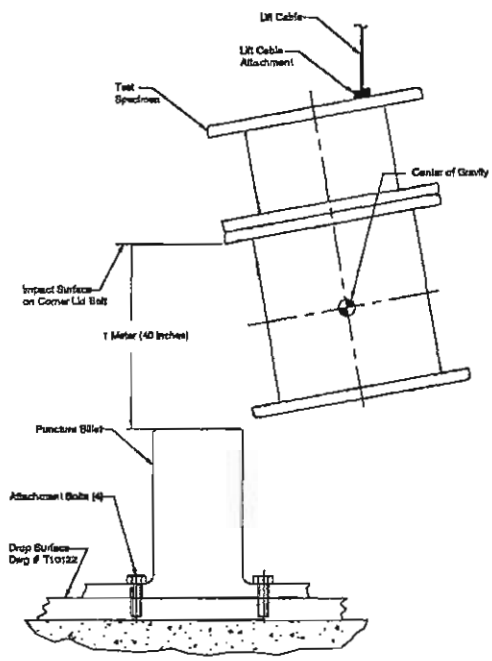

Second Puncture Drop Orientation for Specimen TP80(C)

The unit impacted as intended in both drops. In the first drop, the top of the lid was damaged further, however, the lid remained intact and the puncture bar did not impact the lock assembly. In the second drop, the top plate deformed slightly, but no significant damage was observed.

Post-Test Inspection and Assessment

Following the test, the protective lid was removed and the unit was inspected. No damage to the locks was observed and no significant movement of the source was measured. The post-test radiation profile showed no significant change in radiation levels from the pre-test profile (see Appendix B). Because no significant damage occurred to the unit, the thermal test was not considered necessary (see Section 3). In addition, Specimen TP80(B) was considered worst case.

10. TP80 THERMAL TEST – TP80(B)

Based on the results of the drop tests, a thermal test was performed with specimen TP80(B). The damage to this unit was such that the maximum source pull-out, as well as oxidation of the depleted uranium shield, could occur during the thermal test. The thermal test was not considered necessary for the other test specimens since the results are bounded by those for TP80(B).

Orientation and Setup

Based on the damage observed in the drop tests, it was concluded that worst orientation for the thermal test was to have the unit at an angle such that the center of gravity of the shield was over the bottom corner edge of the inner shell. The cracked side of the unit was oriented downward, so that the shield would move toward the crack as the lead shim melted and the shield dropped down. The worst case angle was determined to be 53° based on the internal geometry of the unit. This would allow the maximum amount of shield movement relative to the top plate, pulling the source out of position. To hold the specimen in this orientation, a steel jig was constructed as shown below.

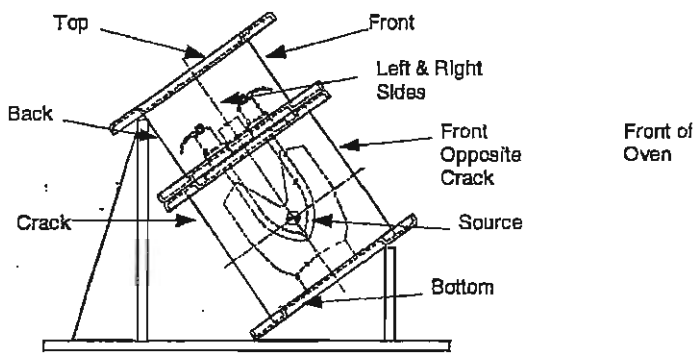

TP80(B) Orientation and Thermocouple Locations

Seven thermocouples were attached to the specimen on the top, bottom, and four side surfaces (two thermocouples on the front side). An eighth thermocouple was inserted into one of the source tubes to measure the internal temperature. A ninth thermocouple was used to measure the ambient oven temperature.

To allow for combustion during the thermal test, the oven door was blocked open with a gap of 1 inch (25.4 mm) at the top and bottom of the door, permitting airflow into the oven while allowing the oven to maintain its temperature. Since the oven door is 36 inches (914 mm) long, each opening was approximately 36 square inches (232 square centimeters).

Test Chronology

Temperatures were recorded from the time the specimen was inserted in the oven until after it had cooled and was moved to a temporary storage area. The total duration of this period was about 1,000 minutes (16 hours). Plots of the temperature data are included in Appendix C. The overall test chronology is as follows:

- Zero to 32 minutes – heat up of the specimen from ambient to over 810°C (1490°F). The 30 minute test started when all surfaces of the specimen exceeded 810°C (1490°F). The thermocouple on the bottom of the unit was the last to reach the target temperature, and the test was started when it reached 813°C (1495°F).

- 32 to 64 minutes – 30 minute test period, with all temperatures maintained above 810°C (1490°F). The maximum temperature was 996°C (1825°F) on the side of the unit facing the rear of the oven, while the minimum temperature was 813°C (1495°F) on the bottom of the unit. The initial and final temperatures of all thermocouples over the 30 minute period are shown below. Flames due to combustion of the foam were observed, however these diminished and stopped before the end of the 30 minute test.

Location	Initial Temp.	Final Temp.	Average Temp.
Bottom	813°C (1495°F)	861°C (1582°F)	872°C (1602°F)
Top	980°C (1796°F)	879°C (1614°F)	913°C (1675°F)
(Lid) Front Oven	934°C (1713°F)	848°C (1558°F)	879°C (1614°F)
(Lid) Back Oven	995°C (1823°F)	884°C (1623°F)	923°C (1693°F)
(Lid) Left Side	949°C (1740°F)	865°C (1589°F)	899°C (1650°F)
(Lid) Right Side	979°C (1794°F)	872°C (1602°F)	909°C (1668°F)
Side (Opposite Crack)	830°C (1526°F)	810°C (1490°F)	823°C (1513°F)
Source Tube	906°C (1663°F)	865°C (1589°F)	886°C (1627°F)
Oven/Ambient	940°C (1724°F)	839°C (1542°F)	877°C (1611°F)

- 64 minutes – removal from oven. The depleted uranium shield was visible, with a slightly red glow in areas. Some depleted uranium oxide (black power) was observed coming out of the crack and onto the surface below, indicating the shield was oxidizing.

- 64 to 700 minutes – cool down to below 100°C (212°F). During this time, the shield was allowed to self-extinguish.

During the cool down period, the unit was allowed to cool via natural convection with no additional heat input. The hypothetical accident conditions specified in the IAEA Safety Series 6 regulations include a requirement to account for heat input due to insolation during the cool down period. This heat input could reduce the cool down rate. However, the reduction was not considered to have any effect on the damage sustained by the test specimen, particularly compared with the 30 minute exposure to 810°C (1490°F) in the oven.

Post-Test Inspection and Assessment

The initial on-site assessment of the test specimen included the following observations:

- A cracked piece of the inner shell was dislodged and had dropped out of position.
- Most paint had vaporized. Radiation labels were still legible.
- All the foam had burned off, leaving a small amount of carbon char.
- The lead shielding and shim melted and some lead had dripped out the bottom of the unit.
- Radiography showed the shield moved laterally and downward as expected. The resulting source pull-out was measured to be 0.436 inch (11.1 mm) on one side and 0.480 inch (12.2 mm) on the other side.
- The lock assemblies were functional; however, the source tubes had completely pulled out of the top plate and had shifted laterally. This caused an interference between the source wire and the top plate, and required that the top plate be machined to enlarge the holes before the unit could be profiled.

After the thermal test, visual observations indicated that the shield had come to rest on the through bolts and bottom plate. However, to securely fix the shield in position for shipping and extensive handling, holes were drilled in the shell of the unit so that foam could be poured in, and the shield was foamed in place. A radiation profile was then done on site with the source located to replicate the amount of observed source pull-out. The highest radiation measurement was 28 mR/hr at one meter (when scaled to the 240 Ci licensed capacity of the unit) at the top of the unit. The small amount of shield oxidation experienced in the test had a minimal effect on the overall effectiveness of the shielding.

APPENDIX D

TEST PHOTOGRAPHS

Test Plan 80 Photographs

Compression Test

Typical Penetration Test Setup

Typical Penetration Impact

Test Plan 80 Photographs

TP80(A) 4 Foot Drop Setup

TP80(A) 4 Foot Drop Results

TP80(A) 30 Foot Drop Setup

TP80(A) 30 Foot Drop Results

Test Plan 80 Photographs

TP80(A) Puncture Test Setup

TP80(A) Puncture Test Results

Test Plan 80 Photographs

TP80(B) 4 Foot Drop Setup

TP80(B) 4 Foot Drop Test Results

Test Plan 80 Photographs

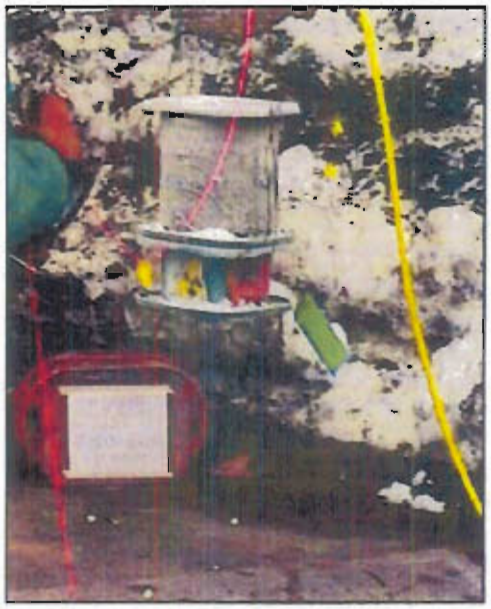

TP80(B) 30 Foot Drop Setup

TP80(B) 30 Foot Drop Results

TP80(B) 30 Foot Drop Results

Test Plan 80 Photographs

TP80(B) Puncture Test Setup

TP80(E) Puncture Test Results

Test Plan 80 Photographs

TP80(C) 4 Foot Drop Test Results

TP80(C) 30 Foot Drop Setup

TP80(C) 30 Foot Drop Results

TP80(C) 30 Foot Drop Results

Test Plan 80 Photographs

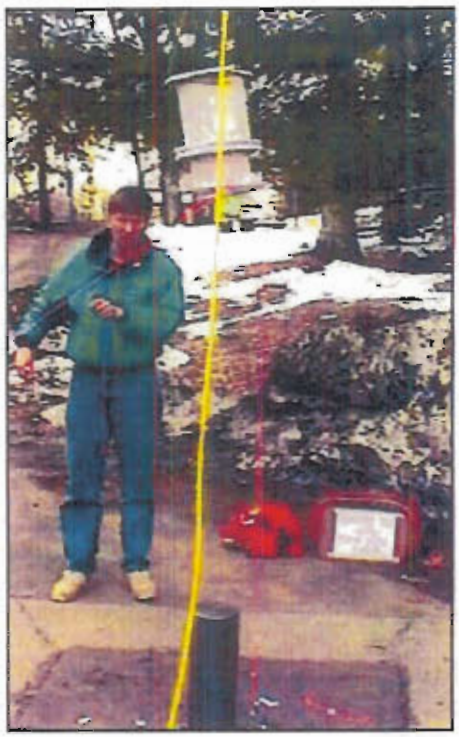

TP80(C) Puncture Drop 1 Setup

TP80(C) Puncture Drop 1 Results

TP80(C) Puncture Drop 2 Setup

TP80(C) Puncture Drop 2 Results Showing Closeup of Rivnut

Test Plan 80 Photographs

TP80(B) Thermal Test Setup

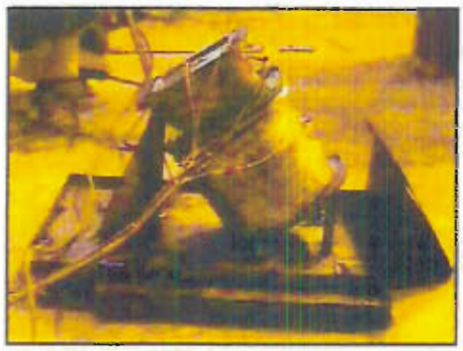

TP80(B) Thermal Test Setup

TP80(B) Thermal Test After Removal From Oven

TP80(B) Thermal Test After Removal From Oven

Test Plan 80 Photographs

TP80(B) Thermal Test After Removal From Oven

TP80(B) Detail of Cracked Shell

TP80(B) Detail of Uranium Oxide Residue

TP80(B) Detail of Uranium Oxide Residue

Test Plan 80 Photographs

TP80(B) Thermal Test After Removal From Oven--Detail of Crack After Foaming to Stabilize Shield

TP80(B) Thermal Test After Removal From Oven—Lid Removed

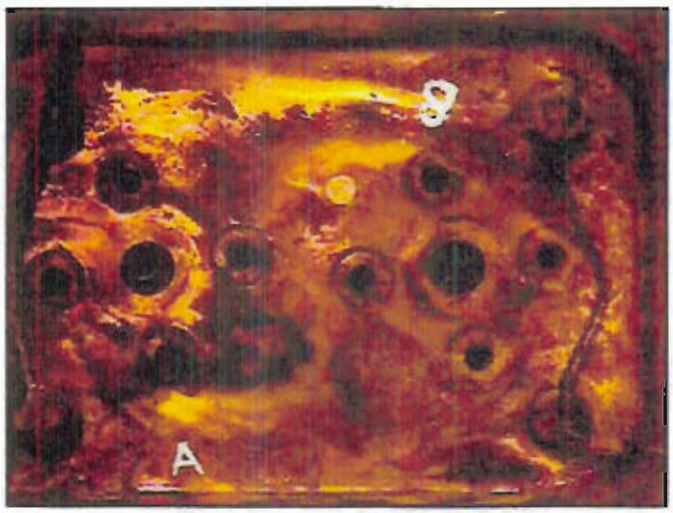

TP80(B) Thermal Test After Removal From Oven--Detail of Source Tube Displacement After Removal of Lock Assemblies

TP80(B) Thermal Test After Removal From Oven--Dummy Source Wire--White Mark Shows Top of Source Tube Position

Appendix D: Multiple Wire Locking Assembly

D.1 Background

Currently the Model 650L source changer is equipped with the standard locking assembly. It is the intention of AEAT to modify all 650L source changers to the multiple wire lock assembly during the currently planned modification cycle (i.e., replacement of the through and cover bolts).

The Type B(U) Testing documented in Appendix C was performed with source changers equipped with the standard locking assemblies. Qualification of the source changer when equipped with the standard locking assemblies is addressed in the body of this document.

In this appendix, the Model 650L source changer, equipped with multiple wire locking assemblies, is evaluated with respect to the requirements for Type B(U) Transport packages contained in 10CFR71. This evaluation is performed by reviewing the 10CFR71 requirements that are potentially affected by the design of the locking assemblies, and assessing the effect of the differences between the standard and multiple wire designs.

D.2 Design Description

The standard and multiple wire locking assembly designs are described in the following sections.

D.2.1 Standard Locking Assembly Design

The main components of the standard locking assembly are the base plate, lock slide, key lock, and hold down cap, as shown in the drawings in Appendix A. With the exception of the key lock subassembly, all components are stainless steel. The key lock is a standard, commercially available part. The standard locking assembly is secured to the source changer top plate with four 1/4-20 stainless steel screws. These screws are arranged in a rectangular pattern (1.25 inch x 1.124 inch) around the source hold down cap.

When the assembly is in the locked position, the source can not be withdrawn from its shielded position because the source wire is captured by tines on the end of the lock slide. The lock slide is prevented from disengaging from the source wire by a lock bolt that projects down from the key lock cylinder and captures the slide. The standard lock assembly is designed to accommodate sources using teleflex wires.

D.2.2 Multiple Wire Locking Assembly Design

The main components of the multiple wire locking assembly are the base plate, base plate

adjustment shims, lock slide, key lock, and hold down cap, as shown in the drawings at the end of this appendix. All components are stainless steel, except for the brass key lock and guiding insert.

The multiple wire locking assembly can accommodate source wires with lengths that differ by as much as 1/2 inch. To allow the capture of the different length source wires, the lock base plate and lock slide are thicker than in the standard design. Additionally, there are spacers of varying heights (0 to 0.25 in) between the top plate and bottom of the lock base plate to provide a tightly controlled distance between the bottom of the source tube and the locking assembly. These dimensional changes result in a slight weight increase for the multiple wire locking assembly of approximately 1 lb (0.45 kg) per source changer (with 2 locking assemblies). Additionally, the overall height of the multiple wire locking assembly is 2.8 to 3.0 inches at the hold down cap, versus 2.3 inches for the standard design. The method of attachment of the lock assemblies to the source changer top plate is the same as for the standard lock assembly, i.e., 1/4-20 screws threaded into the same holes in the top plate.

When the multiple wire locking assembly is in its locked position, the source wire can not be removed from the source changer. The stop ball on the source wire is contained within the 1/2 inch vertical cavity in the lock slide by the slots in the top and bottom of the slide. The spring-loaded pin within the hold down cap keeps the source wire fully inserted in the DU shield.

D.3 Effect of Multiple Wire Locking Assembly Design on Type B(U) Transport Requirements

The characteristics of the multiple wire locking assembly that could have an effect on Type B(U) Transport requirements, as defined in 10CFR71, are compared with those of the standard locking assembly in the following sections.

D.3.1 Weight and Center of Gravity

The source changer weighs up to 90 lb (41 kg), including the DU shield, which weighs approximately 42 lb (19 kg). The weight difference between the standard and multiple wire locking assemblies is 1 lb (0.45 kg) for two assemblies. This increase of 1% for total package weight is considered negligible.

D.3.2 Positive Closure

The multiple wire locking assembly, which secures the source assembly in the shielded position and assures positive closure, cannot be exposed without first removing the top lid of the source changer. After removal of the seal-wired lid, the hold down cap must be removed, the key lock unlocked, and the lock slide moved to the unlocked position before the source wire can be removed from the source changer. When the lock slide is in the

locked position, the stop ball on the source wire is contained within the 1/2 inch vertical cavity in the lock slide by the slots in the top and bottom of the slide.

One other change in the design of the multiple wire locking assembly is the use of a brass key lock. This lock is used by AEA Technology QSA Inc. in all of the Posilock® devices. It has proven safe and effective without failure through extensive field use and Type B testing, whether in or outside of an overpack. Additionally, brass does not undergo a ductile to brittle transition at low temperatures like cast zinc and carbon steel. The brass lock, therefore, is not susceptible to the lock cylinder damage that occurred at low temperatures during the 650L experimental and Type B drop tests. As a result, the key lock is considered capable of ensuring that the lock slide remains in the locked position under both the normal and hypothetical accident conditions.

Based on this evaluation, the multiple wire lock assembly meets the requirements for positive closure.

D.3.3 Normal Conditions of Transport Tests

The use of multiple wire locking assemblies would have no impact on the results of the Normal Conditions of Transport Tests discussed in the body of this report, and in Appendix C. Specifically, as shown in the Test Report (Appendix C), there was no damage to the source changer that could have been affected by the lock assembly design. For Specimens TP80(A) and TP80(B), damage was limited to impact witness markings on the top and bottom plates and the lid. For Specimen TP80(C), the 1.2 meter (4 foot) drop initiated a crack in the top of the lid. No damage was observed for either the locking assemblies or source changer top plates.

The multiple wire lock assembly has the same basic dimensions, materials, and attachment to the source changer top plate, as the standard lock assembly. Therefore, it is concluded that these lock assemblies would not be damaged by the Normal Conditions of Transport Tests.

D.3.4 Hypothetical Accident Condition Tests

The Hypothetical Accident Condition Tests reported in Appendix C identified three potential damage mechanisms that could be affected by the change in the design of the lock assembly. These potential damage mechanisms include the following:

1. Large Deflection of Source Changer Top Plate (Resulting in Source Tube Pullout and Failure of Lock Assembly Attachment Screws)

2. Failure of Lid (Resulting in Failure of Lock Assemblies)

3. Shock of Impact (Resulting in Failure of Lock Assemblies)

These potential damage mechanisms are discussed below.

Large Deflection of Source Changer Top Plate—In the vertical upside down 9 meter (30 foot) drop test of TP80(B), the top plate was deflected upward about 0.16 inch (4.1 mm) in the center of the plate. The top plate, which is 10 gage (~1/8 inch) thick, is less stiff than the standard locking assembly. Therefore, the area of the top plate bounded by the rectangles formed by the lock screws stayed in plane (flat). The distances between the screws (1.124 inch x 1.250 inch) are the same for both designs, and the multiple wire lock assembly is at least as stiff as the standard design. Therefore, the top plate deformation (and potential source tube pullout) would be unaffected by use of the multiple wire locking assembly. Note that although the footprint of the multiple wire locking assembly is slightly different than that of the standard design, the differences are in the key lock end of the assembly, which cantilevers above the top plate when the plate deflects upward. The extra weight (1 lb) of the multiple wire locking assembly would have a negligible effect on the deflection of the top plate, which is driven by the weight of the DU shield (approximately 42 lb).

Failure of Lid—In the top corner down 9 meter (30 foot) drop test of TP80(C), the source changer lid partially failed due to the brittle condition of the carbon steel. Specifically, the lid cracked and its top plate deflected inward about 1/2 inch along one edge. The subsequent puncture test increased the lid damage slightly. The normal height of the lid (4 1/2 inches) is sufficient to allow such a deflection and still protect the multiple wire locking assembly, which is about 3 inches high at the cap. Therefore, it is concluded that the source changer lid would protect the multiple wire lock assembly during Hypothetical Accident Condition Testing.

Shock of Impact—The standard locking assembly was dropped three times from 9 meters (30 feet). The assemblies stayed in the locked position for all three tests. The multiple wire lock assembly has the same basic dimensions, materials, and attachment to the source changer top plate, as the standard lock assembly. Therefore, it is concluded that these lock assemblies would remain in the locked position during the Hypothetical Accident Conditions of Transport Tests.

D.4 Conclusion

The Model 650L source changer, when equipped with the multiple wire locking assembly, satisfies the requirements for Type B(U) Transport packages by comparison to the standard locking assembly.

2.12.7 USDOT Special Form Certificate USA/0377/S-96 Rev 7

U.S. Department
of Transportation
Pipeline and
Hazardous Materials
Safety Administration

400 Seventh Street, S.W.
Washington, D.C. 20590

IAEA CERTIFICATE OF COMPETENT AUTHORITY
SPECIAL FORM RADIOACTIVE MATERIALS
CERTIFICATE USA/0377/S-96, REVISION 7

This certifies that the sources described have been demonstrated to meet the regulatory requirements for special form radioactive material as prescribed in the regulations of the International Atomic Energy Agency[1] and the United States of America[2] for the transport of radioactive material.

1. Source Identification - QSA Global, Inc. Models 60011, 60012, and 60013.

2. Source Description - Cylindrical double encapsulations made of Type 304 or 304L stainless steel and seal welded. Approximate outer dimensions are 6.35 mm (0.25 in.) in diameter and 24.3 mm (0.96 in.) in length (Model 60011); 8.89 mm (0.35 in.) in diameter and 32.5 mm (1.28 in.) in length (Model 60012); and 12.1 mm (0.48 in.) in diameter and 40.3 mm (1.59 in.) in length (Model 60013). Inner capsules are made of stainless steel or titanium, secured by stainless steel, titanium, or aluminum spacer disks and springs. Construction shall be in accordance with attached Tech/Ops Drawing No. 60060, Rev. B.

3. Radioactive Contents - No more than 8.14 TBq (220.0 Ci) of Cobalt-60 for the Model 60011. No more than 25.9 TBq (700.0 Ci) of Cobalt-60 for the Model 60012. No more than 44.4 TBq (1,200.0 Ci) of Cobalt-60 for the Model 60013. The Co-60 is in solid metallic form.

4. Quality Assurance - Records of Quality Assurance activities required by Paragraph 310 of the IAEA regulations[1] shall be maintained and made available to the authorized officials for at least three years after the last shipment authorized by this certificate. Consignors and consignees in the United States exporting or importing shipments under this certificate shall satisfy the requirements of Subpart H of 10 CFR 71.

5. Expiration Date - This certificate expires on April 30, 2011.

---

[1] "Regulations for the Safe Transport of Radioactive Material, 1996 Edition (Revised), No. TS-R-1 (ST-1, Revised)," published by the International Atomic Energy Agency(IAEA), Vienna, Austria.

[2] Title 49, Code of Federal Regulations, Parts 100-199, United States of America.

CERTIFICATE USA/0377/S-96, REVISION 7

This certificate is issued in accordance with paragraph 804 of the IAEA Regulations and Section 173.476 of Title 49 of the Code of Federal Regulations, in response to the March 06, 2006 petition by QSA Global, Inc., Burlington, MA and in consideration of other information on file in this Office.

Certified By:

for Robert A. McGuire
Associate Administrator for Hazardous Materials Safety

Apr 05 2006
(DATE)

Revision 7 - Issued to extend the expiration date and update company name.

REV.	DATE	DESCRIPTION
A	25 SEP 85	SEE HT 1 F/G1
B	1 MAY 86	NOTES ADDED TO DESCRIBE ADDITIONAL CONTENTS F/

NOTES:

1. EACH SOURCE CAPSULE IS SEAL WELDED IN ACCORDANCE WITH TECH/OPS STANDARD SOURCE ENCAPSULATION PROCEDURE
2. IN ADDITION TO THE RADIONUCLIDE, COBALT-60, THE SOURCE CAPSULE MAY CONTAIN STAINLESS STEEL, TITANIUM OR ALUMINUM AS A SECONDARY ENCAPSULATION SPACER OR SPRING

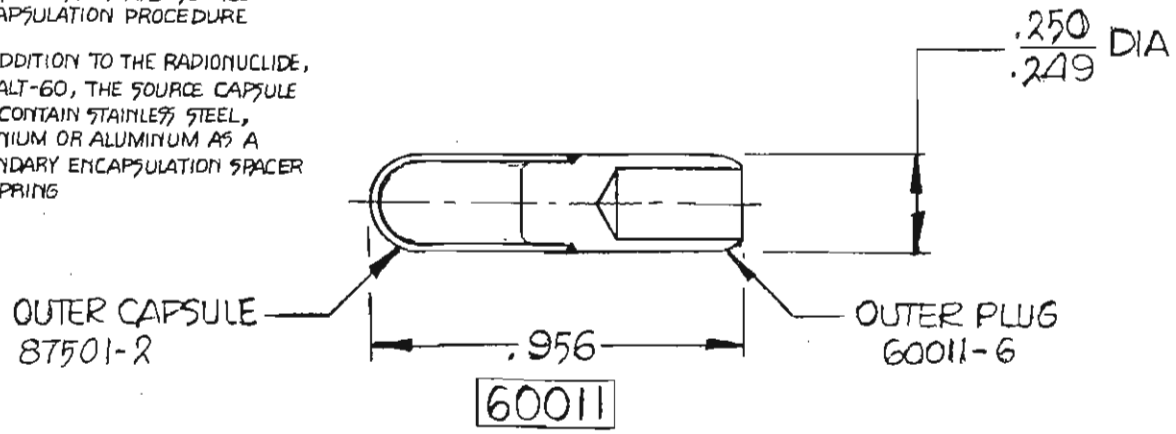

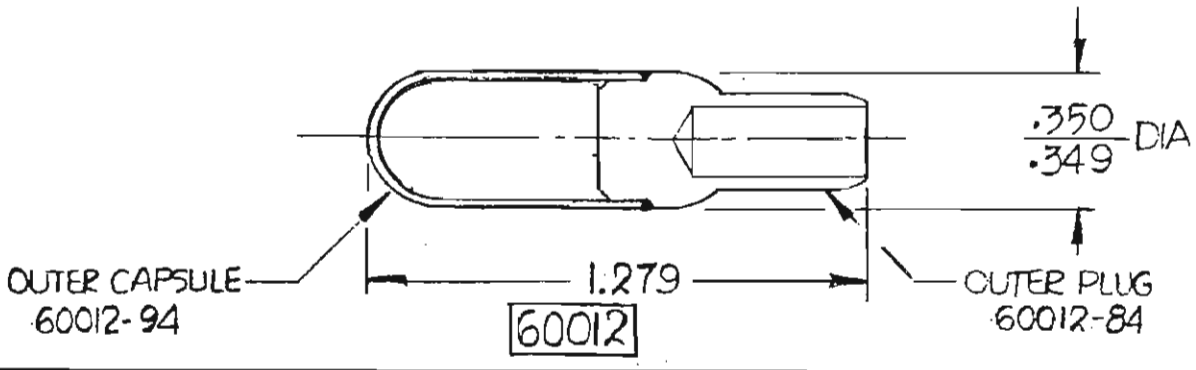

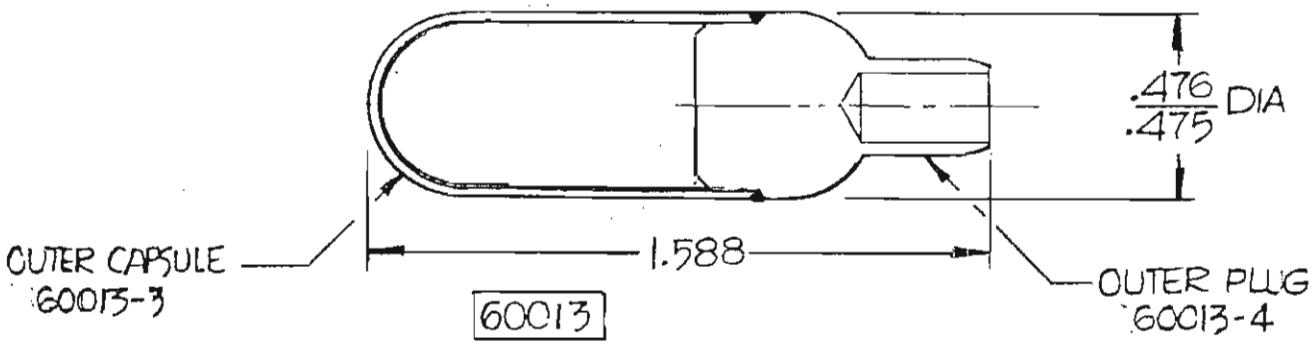

MATERIALS		TECH/OPS, INC. RADIATION PRODUCTS DIVISION BURLINGTON, MA 01803
FINISH		DWG TITLE: COBALT 60 SOURCE REFERENCE
DRAWN BY: Tindall 25 Jul. 79	UNLESS OTHERWISE SPECIFIED TOLERANCES ARE	
CHECKED BY	.X ±	
	.XX ±	
	.XXX ±	CLASSIFICATION: — SIZE: A DWG. NO.: 60060 REV.: B
APPROVED BY	ANGLES ±	
	FRACTIONS ±	SCALE 2:1 SHEET 2 OF 3

2.12.8 Test Plan 79 Report dated 22 October 1998

SENTINEL

TEST PLAN NO. 79

TEST PLAN COVER SHEET

TEST TITLE: VULTAFOAM COMPRESSION TEST	
PRODUCT MODEL: 650 AND 680	
ORIGINATED BY: S. Gemini	DATE: 8 OCT 98
TEST PLAN REVIEW	
ENGINEERING APPROVAL: S. Gemini	DATE: 8 OCT 98
QUALITY ASSURANCE APPROVAL: N J Marra	DATE: 9 Oct 98
REGULATORY APPROVAL: C. Rongman	DATE: 9 Oct 98
COMMENTS:	
TEST RESULTS REVIEW	
ENGINEERING APPROVAL: [illegible]	DATE: 16 OCT 98
QUALITY ASSURANCE APPROVAL: Nicholas J Marra	DATE: 20 Oct 98
REGULATORY APPROVAL: C. Rongman	DATE: 22 Oct 98

Amersham QSA

PURPOSE

This test plan describes an experiment to determine the typical compression and energy absorption characteristics of the foam material used in the Sentinel radiography device and transport packages. The foam is Vultafoam, part number 16-L-708 and 16-L-720, manufactured by General Latex and Chemical Corp. The tests involve dropping a steel bar onto foam samples and measuring the depth of compression. Tests will be done at various temperatures.

MEASURING AND TEST EQUIPMENT

Required measuring and test equipment includes:

1. Steel bar and guide tube
2. Scale (calibrated)
3. Thermocouples and thermocouple reader (calibrated)
4. Ruler, one meter long, OR tape measure
5. Graduated cylinder (1 ml accuracy)
6. Caliper (0.001 inch accuracy)
7. Oven
8. Freezer or cooler with dry ice

TEST SPECIMEN PREPARATION

A total of 12 test specimens (identified in Table 1) are to be made using this test plan and work instruction WI-AS40. All the test specimens are to be contained in a ½ pint tin can. Test specimen foam mixtures are determined in Table 4 to simulate representative volumes of the model 650 and model 680 in the ½ pint cans.

Table 1. Foam Specimens

Set No.	Number of Specimens	Foam Part No.	Can Top Open or Closed
1	3	16-L-708	Open
2	3	16-L-708	Closed
3	3	16-L-720	Open
4	3	16-L-720	Closed

Can Preparation

1. Identify each can with its set number and specimen number 1 through 3.
2. For Sets 2 and 4, drill a small hole (about ½ inch diameter) in the top of the can lid.
3. Weigh each tin can and record the weight before adding the Vultafoam. Record the weight in attached foam compression test data sheets.
4. Measure the volume of a can without the top on and a can with the top on. Note: Based on previous observations the volume of a can without a top on is typically 257 ± 2 mL. Measure the volume by filling the can with water and measuring the water volume with the graduated cylinder. Record the volume for each can in the attached foam compression test data sheets.

Foam Component Density

Determine the density of Vultafoam components. For each component (16-L-708 and 16-L-1720) perform the following steps:

a) Weigh the graduated cylinder when empty and dry.

b) Fill the graduated cylinder with the component and record the volume in Table 2.

c) Weigh the cylinder to determine the weight of the component and record in Table 2.

d) Repeat this procedure for the other component.

e) Calculate the density of the component in Table 2

Foam Mass Required

Determine the mass of mixture used in the Vultafoam work instruction (WI-AS40-01) for Model 650 and 680 using Table 3.

Foam Mixture Required for Test Can

Determine the mass of mixture to use in the test sets by completing Table 4.

Test Set Preparation

1. For Test Set 1, mix Vultafoam components A and B in the volume ratio specified in the WI for the model 650 or 680 as appropriate. Record the volume of each component in test date sheet (mix enough foam to prepare the number of cans which can be foamed in about 3 minutes). Mix the Vultafoam parts using a pistol drill with a stirrer for approximately five seconds.
2. Place the test can on the scale and zero the scale. Pour the required mixture weight (as determined in Table 4) into the test can. Record the weight in the attached data sheets. Remove the can from the scale.
3. For test sets 2 and 4 place the lid on the can and tap edges with a rubber mallet to ensure the lid is tight.
4. Repeat steps 1 through 3 for the remaining test set cans.
5. After the foam has cured, remove the top of the can for Sets 2 and 4. For Sets 1 and 3, cut the top of the foam flush with the top of the can. Record the cure time in the attached data sheets.
6. Weigh each can and record value in the attached data sheets.
7. Calculate the effective density in the attached data sheets.
8. Cut approximately ¼" off the top and bottom of the can to obtain a level surface for the drop test.
9. Record the foam height of the test specimen.
10. Drill a small hole in the center of the side of the test can shell approximately 1 inch deep for the thermocouple.

TEST INSTRUCTIONS

Document completion of these test instructions on the attached data sheet.

Test Preparation:

1. Verify all measuring and test equipment is in calibration.
2. Fabricate and measure specimens as described above.
3. Insert the thermocouple into the foam approximately in the center of the can.
4. Place one of each type of specimen in oven set to a temperature of at least 100°F for at least one hour.
5. Place one of each type of specimen in a freezer set to –40°F or lower or in a cooler with dry ice for at least one hour.
6. Allow one of each type of specimen to remain at room temperature for testing.

7. Mount the guide tube over a clean, flat surface such that the tube is vertical (see Figure 2). Make sure the guide tube is mounted such that the drop height of the steel bar can be accurately measured and both ends of the tube will be unobstructed during the test (i.e., make sure that air can easily escape the tube as the bar is dropped).

Compression Test:

1. Position the steel bar in the guide tube and measure the drop height.
2. Record the temperature of the test specimen as it is removed from the oven/freezer.
3. Place the specimen on the test surface and secure in place. Immediately drop the bar onto the specimen.
4. Measure the depth of compression.
5. Record any observations regarding damage to the specimen.

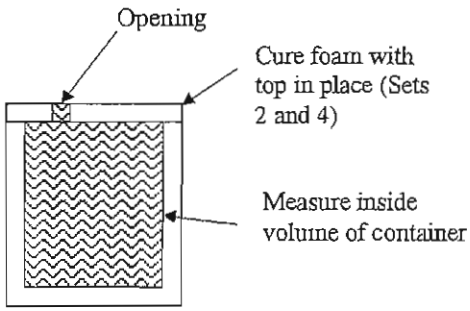

Figure 1. Foam Container

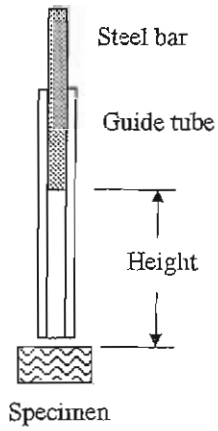

Figure 2. Test Set Up

Table 2. Vultafoam Component Density

Set No.	Part	Empty Cylinder Wgt. (A) (lbs)	Volume of Component (B) (mL)	Wgt of Cylinder w/Comp (C) (lbs)	Calculated Density (C-A)/(B/29.575) (lbs/oz)
16-L-1708	A				
	B				
16-L-1720	A				
	B				

Note: Volume conversion: 1 oz. = 29.575 ml

Completed by: _____ Date: _____

Check by: _____ Date: _____

Table 3. Vultafoam Mixture Weight Used in Model 650 and 680

Model	Foam Type	Part A			Part B			Total Mass of Mixture used in device ($m_A + m_B$)
		Vol_A * (oz)	ρ_A (From Table 2)	m_A (Vol_A)(ρ_A)	Vol_B * (oz)	ρ_B (From Table 2)	m_B (Vol_B)(ρ_B)	
650	16-L-708	24			30			
680	16-L-720	225			281			

* Volumes of A and B from WIAS40

Completed by: _____ Date: _____

Check by: _____ Date: _____

Table 4. Vultafoam Mixture Required for Test Cans

Test Sets	Foam Type	Total Mass of Mixture in Device (From Table 3) (A)	Volume Ratio Vol_{Can} / Vol_{Device} * (B)	Mass of Vultafoam Added to Test Can (lbs) (A*B)
1,2	16-L-708		0.057	
3,4	16-L-720		0.010	

* Based on scoping estimates (Attachment A and B)

Completed by: _____ Date: _____

Check by: _____ Date: _____

Foam Compression Test Data Sheet

Equipment

Description	Model/Serial Number(s)	Calibration Date(s)
Steel bar #1		N/A
Steel bar #2		N/A
Thermocouple/thermometer		
Scale #1		
Scale #2		
Height Gage		
Oven		N/A
Additional Equipment:		
Graduated Cylinder		N/A
Ruler/tape measure		N/A

Completed by: _____ Date: _____

Check by: _____ Date: _____

Foam Compression Test Data Sheet
- **16-L-708 (8 pcf Density) Foam**
- **Free Rise**

Set 1 – Free Rise Specimens	Specimen 1-1	Specimen 1-2	Specimen 1-3
1. Can empty weight (lbs)			
2. Can volume (mL)			
3. Volume of Component A / B in mixture (ml)			
4. Weight of Vultafoam added to can (lbs)			
5. Cure time (min)			
6. Filled weight (lbs)			
7. Foam height, Pre-drop (in)			
8. Heating/cooling time (min)			
9. Specimen temperature (°F)			
10. Drop Bar Used			
11. Bar drop height (in)			
12. Foam height, Post-drop (in)			

Completed by: _____ Date: _____

Check by: _____ Date: _____

Foam Compression Test Data Sheet
- **16-L-708 (8 pcf density) Foam**
- **Contained Specimens**

Set 2 – Contained Specimens	Specimen 2-1	Specimen 2-2	Specimen 2-3
13. Can empty weight (lbs)			
14. Can volume (mL)			
15. Volume of Component A / B in mixture (ml)			
16. Weight of Vultafoam added to can (lbs)			
17. Cure time (min)			
18. Filled weight (lbs)			
19. Foam height, Pre-drop (in)			
20. Heating/cooling time (min)			
21. Specimen temperature (°F)			
22. Drop Bar Used			
23. Bar drop height (in)			
24. Foam height, Post-drop (in)			

Completed by: _____ Date: _____

Check by: _____ Date: _____

Foam Compression Test Data Sheet
- **16-L-720 (20 pcf Density) Foam**
- **Free Rise**

Set 3 -- Free Rise Specimens	Specimen 3-1	Specimen 3-2	Specimen 3-3
25. Can empty weight (lbs)			
26. Can volume (mL)			
27. Volume of Component A / B in mixture (ml)			
28. Weight of Vultafoam added to can (lbs)			
29. Cure time (min)			
30. Filled weight (lbs)			
31. Foam height, Pre-drop (in)			
32. Heating/cooling time (min)			
33. Specimen temperature (°F)			
34. Drop Bar Used			
35. Bar drop height (in)			
36. Foam height, Post-drop (in)			

Completed by: _____ Date: _____

Check by: _____ Date: _____

Foam Compression Test Data Sheet
- **16-L-720 (20 pcf Density) Foam**
- **Contained Specimen**

Set 4 -- Contained Specimens	Specimen 4-1	Specimen 4-2	Specimen 4-3
37. Can empty weight (lbs)			
38. Can volume (mL)			
39. Volume of Component A / B in mixture (ml)			
40. Weight of Vultafoam added to can (lbs)			
41. Cure time (min)			
42. Filled weight (lbs)			
43. Foam height, Pre-drop (in)			
44. Heating/cooling time (min)			
45. Specimen temperature (°F)			
46. Drop Bar Used			
47. Bar drop height (in)			
48. Foam height, Post-drop (in)			

Completed by: _____ Date: _____

Check by: _____ Date: _____

VULTAFOAM IMPACT TEST RESULTS

PURPOSE

To document the results of impact testing conducted on Vultafoam 16-L-708 and 16-L-720 test specimens at AEA Technology.

SUMMARY

Vultafoam 16-L-708 and 16-L-720 specimens were produced in ½ pint (8 fluid ounce) cans to simulate the typical foam formed in Sentinel Model 650 and 680 radiography devices during manufacturing. The samples were then tested to determine the effects of temperature and foam density on the compression characteristics of the foam at various impact energies by dropping a 1-inch diameter steel bar from various heights. Test results are summarized below in Table 1 and detailed results are in Tables 2 through 5. Test data sheets and equipment calibration records can be found in Attachment A and Attachment B respectively.

Table 1. Test Summary

Set No.	Foam Part No.	Open / Closed	Specimen No.	Effective Density (lb/ft^3)	Test Temp (F)	Drop Height (in)	Drop Energy (ft·lbs)	Foam Compression (in)	Foam Strain
1	16-L-708	Open	1	10.4	-54	48.75	17.875	.359	.134
			2	10.1	71	40.13	14.713	.374	.135
			3	10.2	105	40.13	14.713	.352	.132
2	16-L-708	Closed	1	12.7	-45	48.75	45.906	.864	.320
			2	13.0	70	40.18	14.733	.214	.083
			3	12.8	120	56.75	20.808	.189	.071
3	16-L-720	Open	1	24.3	-50	99.00	93.225	.321	.116
			2	24.1	70	67.63	63.685	.255	.090
			3	24.5	134	99.00	93.225	.262	.098
4	16-L-720	Closed	1	25.7	-63	99.13	93.347	.410	.152
			2	26.1	70	84.25	79.335	.296	.109
			3	28.7	117	99.00	93.225	.265	.097
5	16-L-708	Open	1	10.3	71	56.75	20.808	.466	.176
			2	10.3	71	48.88	46.029	1.060	.400
6	16-L-708	Closed	1	12.6	70	48.88	46.024	.856	.318
			2	12.7	71	56.75	53.440	.810	.299
7	16-L-720	Open	1	23.8	70	98.75	92.990	.349	.124
			2	24.8	70	98.88	93.112	.383	.136
8	16-L-720	Closed	1	28.8	70	99.00	93.225	.265	.097
			2	28.9	70	99.13	93.343	.289	.107

TEST DESCRIPTION

The impact testing discussed below was conducted in accordance with AEA Test Plan 79. Vultafoam test specimens were prepared in ½ pint tin cans to simulate representative volumes of the Sentinel Model 650 and 680 radiography devices. The amount of foam required in the test containers was determined experimentally. The foam for the specimens was then mixed following the guidelines in AEA Work Instruction WI-AS40. After the samples were allowed to cure, they were either cooled in dry ice, left at room temperature, or heated in an oven for approximately one hour. The test specimens were then impacted with 1-inch diameter steel bars (either 4.4 lb or 11.3 lb) and the depth of foam compression was measured. The method of determining the foam required in the test containers, the preparation of the test specimens, the impact test method, and the test equipment are described below.

Determination of Foam Required in Test Containers

The amount of Vultafoam required in the test container to simulate representative volumes of the Sentinel Model 650 and 680 was determined experimentally. First, the densities of the Vultafoam parts (A and B) for each foam type (708 and 720) were determined by weighing a known volume of each foam part. The foam density was then multiplied by the volume called for in the foam work instruction and the ratio of the device volume to the test container volume to determine the mass of Vultafoam required in each test container. These calculations are included in the test data sheets (Attachment B). The calculation to determine the volume ratio of each device to the test container is included in Attachment C.

Preparation of Test Specimens

A total of 20 foam test specimens were prepared in ½ pint tin cans. Twelve foam specimens were prepared as specified in the test plan. Four additional test sets, with two specimens each, were also produced and left at room temperature to provide additional data points. The tops of test cans for test sets 1, 3, 5, and 7 were left open. The lids for test sets 2, 4, 6, and 8 were drilled with a small hole (Figure 1) and placed on the cans after the foam was poured. This was intended to be representative of the opening used to fill the actual devices.

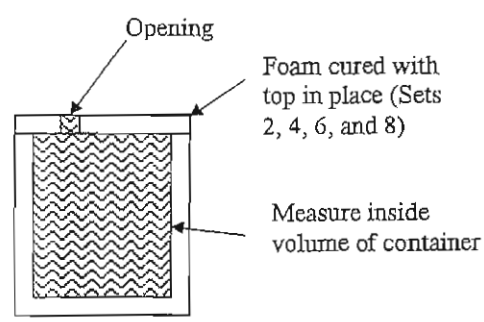

Figure 1. Test Container

The empty volume and weight of the test specimens were determined before the foam was poured so that the density of the foam could be determined after it cured. The volume of a can with the lid off and with the lid in place was verified by filling the can with water and measuring the volume of the water with a graduated cylinder. Each can was then weighed and the data was recorded in the test plan data sheets.

The foam was mixed and poured in accordance with AEA Work Instruction WI-AS40. Batches of the foam mixture were prepared in a sufficient quantity to fill two or three specimens at a time. After the samples were allowed to cure for at least 2 hours, the overflow foam was trimmed and the lids on the contained test cans were removed. The test specimens were then weighed to determine effective density of the foam. The foam density calculations are provided in Attachment D. The top and bottom of the test specimen can was then trimmed with the lathe

to provide a flat and level impact surface and a thermocouple hole was drilled in the side of the can. Foam height for each test specimen was then recorded. Finally, the test specimens were either cooled in dry ice, left at room temperature, or heated in an oven.

Impact Test Method

To test the compression characteristics of the foam, a 1-inch diameter steel impact bar was dropped from various heights. A guide tube was used to ensure the bar impacted the foam squarely (Figure 2). The foam specimens were placed on a solid steel impact surface and clamped horizontally in place to ensure the samples would not move sideways during impact.

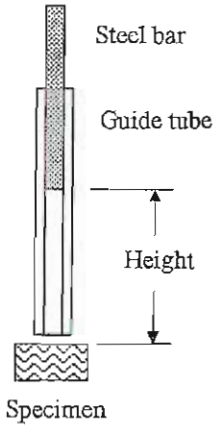

Figure 2. Test Set Up

TEST RESULTS

Detailed test results are shown in Tables 2 through 5. Observations for each test are described in the notes of the Table 2. Note, for the majority of 20 PCF specimens the steel bar was observed rebounding after the initial impact.

Table 2. Test Details 16-L-708 (8 PCF) Free Rise Specimens

	Specimen number									
	1-1		1-2		1-3		5-1		5-2	
Container empty weight (lbs)	0.108		0.099		0.098		0.098		0.108	
Container volume (mL)	258		258		258		258		258	
Mixture Volume A & B (mL)	133	150	133	150	133	150	133	150	133	150
Mixture Weight A & B (lbs)	0.354	0.354	0.354	0.354	0.354	0.354	0.354	0.354	0.354	0.354
Vultafoam added to Can - Weight (lbs)	0.230		0.242		0.226		0.230		0.170	
Cure time (min)	175		175		175		135		135	
Filled Weight (excess removed) (lbs)	0.203		0.191		0.191		0.192		0.202	
Effective density (lbs/ft^3)	10.4		10.1		10.2		10.3		10.3	
Specimen temperature (F)	-54		71		105		71		71	
Vultafoam height, pre-drop (in)	2.683		2.763		2.667		2.642		2.647	
Bar weight (lbs)	4.4		4.4		4.4		4.4		11.3	
Bar drop height (in)	48.75		40.13		40.13		56.75		48.88	
Bar area (in2)	0.75		0.75		0.75		0.75		0.79	
Vultafoam height, post-drop (in)	2.324		2.389		2.315		2.176		1.587	
Calculated compression (in)	0.359		0.374		0.352		0.466		1.060	
Strain	0.134		0.135		0.132		0.176		0.400	
Kinetic Energy at Impact (ft-lbs)	17.875		14.713		14.713		20.808		46.029	
Observations (See Notes)	1		1		1		1		1	

1 - Steel bar did not bounce at impact
2 - Steel bar bounced < 1/8" above foam surface
3 - Steel bar bounced < 1/2" above foam surface
4 - Radial Crack in Foam from Impact
5 - Steel bar impacted foam at small angle <5 deg
6 - Steel bar impacted foam at small angle <10 deg
7 - Rebound impression in Foam

Table 3. Test Details 16-L-708 (8 PCF) Contained Specimens

	Specimen number									
	2-1		2-2		2-3		6-1		6-2	
Container empty weight (lbs)	0.109		0.109		0.109		0.099		0.098	
Container volume (mL)	257		257		257		257		257	
Mixture Volume A & B (mL)	141	159	141	159	141	159	134	150	134	150
Mixture Weight A & B (lbs)	0.375	0.375	0.375	0.375	0.375	0.375	0.356	0.356	0.356	0.356
Vultafoam added to Can - Weight (lbs)	0.220		0.224		0.220		0.252		0.226	
Cure time (min)	160		160		160		155		155	
Filled Weight (excess removed) (lbs)	0.224		0.227		0.225		0.213		0.213	
Effective density (lbs/ft^3)	12.7		13.0		12.8		12.6		12.7	
Specimen temperature (F)	-45		70		120		70		71	
Vultafoam height, pre-drop (in)	2.700		2.582		2.667		2.694		2.706	
Bar weight (lbs)	11.3		4.4		4.4		11.3		11.3	
Bar drop height (in)	48.75		40.18		56.75		48.88		56.75	
Bar area (in2)	0.79		0.75		0.75		0.79		0.79	
Vultafoam height, post-drop (in)	1.836		2.368		2.478		1.838		1.896	
Calculated compression (in)	0.864		0.214		0.189		0.856		0.810	
Strain	0.320		0.083		0.071		0.318		0.299	
Kinetic Energy at Impact (ft-lbs)	45.906		14.733		20.808		46.024		53.440	
Observations (See Notes)	1,4		2		2		1		1	

Table 4. Test Details 16-L-720 (20 PCF) Free Rise Specimens

	Specimen number									
	3-1		3-2		3-3		7-1		7-2	
Container empty weight (lbs)	0.108		0.109		0.098		0.098		0.098	
Container volume (mL)	258		258		258		258		258	
Mixture Volume A & B (mL)	219	249	219	249	219	249	189	214	189	214
Mixture Weight A & B (lbs)	0.580	0.580	0.580	0.580	0.580	0.580	0.500	0.500	0.500	0.500
Vultafoam added to Can - Weight (lbs)	0.372		0.372		0.346		0.374		0.370	
Cure time (min)	140		140		140		135		135	
Filled Weight (excess removed) (lbs)	0.329		0.329		0.321		0.315		0.324	
Effective density (lbs/ft^3)	24.3		24.1		24.5		23.8		24.8	
Specimen temperature (F)	-50		70		134		70		70	
Vultafoam height, pre-drop (in)	2.76		2.831		2.678		2.812		2.813	
Bar weight (lbs)	11.3		11.3		11.3		11.3		11.3	
Bar drop height (in)	99.00		67.63		99.00		98.75		98.88	
Bar area (in2)	0.79		0.79		0.79		0.79		0.79	
Vultafoam height, post-drop (in)	2.439		2.576		2.416		2.463		2.430	
Calculated compression (in)	0.321		0.255		0.262		0.349		0.383	
Strain	0.116		0.090		0.098		0.124		0.136	
Kinetic Energy at Impact (ft-lbs)	93.225		63.685		93.225		92.990		93.112	
Observations (See Notes)	1,4		2		2,6		3,4		1	

Table 5. Test Details 16-L-720 (20 PCF) Contained Specimens

	Specimen number									
	4-1		4-2		4-3		8-1		8-2	
Container empty weight (lbs)	0.098		0.099		0.099		0.098		0.098	
Container volume (mL)	257		257		257		257		257	
Mixture Volume A & B (mL)	227	258	227	258	227	258	189	215	189	215
Mixture Weight A & B (lbs)	0.601	0.601	0.601	0.601	0.601	0.601	0.501	0.501	0.501	0.501
Vultafoam added to Can - Weight (lbs)	0.376		0.376		0.372		0.376		0.376	
Cure time (min)	130		130		130		125		125	
Filled Weight (excess removed) (lbs)	0.331		0.336		0.359		0.359		0.360	
Effective density (lbs/ft^3)	25.7		26.1		28.7		28.8		28.9	
Specimen temperature (F)	-63		70		117		70		70	
Vultafoam height, pre-drop (in)	2.706		2.708		2.725		2.719		2.709	
Bar weight (lbs)	11.3		11.3		11.3		11.3		11.3	
Bar drop height (in)	99.13		84.25		99.00		99.00		99.13	
Bar area (in2)	0.79		0.79		0.79		0.79		0.79	
Vultafoam height, post-drop (in)	2.296		2.412		2.460		2.454		2.420	
Calculated compression (in)	0.410		0.296		0.265		0.265		0.289	
Strain	0.152		0.109		0.097		0.097		0.107	
Kinetic Energy at Impact (ft-lbs)	93.347		79.335		93.225		93.225		93.343	
Observations (See Notes)	1,4		3,5		2,6		3,5,7		3,5	

ATTACHMENT A – TEST DATA SHEETS

Table 2. Vultafoam Component Density

Set No. (#2) 15OCT98	Part	Empty Cylinder Wgt. (A) (lbs) (#51)	Volume of Component (B) (mL)	Wgt of Cylinder w/Comp (C) (lbs) (#51)	Calculated Density (C-A)/(B/29.575) (lbs/oz)
16-L-~~1~~708	A	.2768	50	.4094	.0784
(#2) 15OCT98	B	.2739	50	.3922	.0700
16-L-~~1~~720	A	.2771	50	.4093	.0782
	B	.2756	50	.3922	.0690

T= 69.9°F
USING G-8-12
G-8-11

Note: Volume conversion: 1 oz. = 29.575 ml

Completed by: S. Gr[illegible] Date: 15 OCT 98

Witnessed ~~Check~~ by: [signature] Date: 15 OCT 98
7 15 OCT 98

CHECKED BY: [signature] 15 OCT 98

(#51) DENOTES SCALE USED WAS SCALE #1

(#52) DENOTES SCALE USED WAS SCALE #2

Foam Compression Test Data Sheet

Equipment

Description	Model/Serial Number(s)	Calibration Date(s)
Steel bar #1	T10236 / SN01	N/A
Steel bar #2	T10248 / SN01	N/A
Thermocouple/thermometer (T)	ENG-11, ENG-12	SERVICED 8-OCT-98 DUE 8-OCT-99
Scale #1 (#S1)	8200 / SR87840011	SERVICED 8-MAY-98 DUE 8-NOV-98
Scale #2 (Citizen Precision) (#S2)	500C / 834468	SERVICED 8-MAY-98 DUE 8-NOV-98
Height Gage (HG)	MITUTOYO / 027	SERVICED 8-JUN-98 DUE 8-JUN-99
Oven	THERMOLYNE 1300	N/A
Additional Equipment:		
Graduated Cylinder (GC)	PYREX 100 ML	N/A
Ruler/tape measure (Tm)		N/A

Completed by: S. Gr[illegible] Date: 15 OCT 98

Check by: MBBaxd Date: 15 Oct 98

Foam Compression Test Data Sheet
- 16-L-708 (8 pcf Density) Foam
- Free Rise

	Set 1 – Free Rise Specimens	Specimen 1-1	Specimen 1-2	Specimen 1-3
#S1	1. Can empty weight (lbs)	.108	.099	.098
GC	2. Can volume (mL)	258	258	258
1	3. Volume of Component A / B in mixture (ml)	133 / 150 (.354 / .354 LBS)	→	→
#S2	4. Weight of Vultafoam added to can (lbs)	.230	.242	.226
	5. Cure time (min)	175	175	175
#S1	6. Filled weight (lbs)	.203	.191	.191
HG	7. Foam height, Pre-drop (in)	2.683	2.763	2.667
	8. Heating/cooling time (min)	60	NA	60
T	9. Specimen temperature (°F)	-54	71	105
	10. Drop Bar Used	#1 (4.4 LBS)	#1	#1
TM	11. Bar drop height (in)	48.75	40.13	40.13
HG	12. Foam height, Post-drop (in)	2.324	2.389	2.315
	OBSERVATIONS	2	2	2

Completed by: S. Gr[illegible] Date: 15 OCT 98

Check by: MBBayd Date: 15 Oct 98

NOTES:

1. MEASURING SMALL QUANTITIES OF COMPONENTS BY VOLUME PROVED TO BE DIFFICULT AND INACCURATE DURING TRIAL RUNS. SINCE THE WORK INSTRUCTION ALLOWS MIXING COMPONENTS IN A 1:1 RATIO BY WEIGHT, THE COMPONENT VOLUMES WERE CALCULATED USING (COMPONENT WEIGHT MEASUREMENTS) AND DENSITY FACTORS FROM TABLE 2.
2. DROP BAR DID NOT BOUNCE.
3. DROP BAR BOUNCED LESS THAN 1/8 INCH.
4. DROP BAR BOUNCED LESS THAN 1/2 INCH.
5. RADIAL CRACKS PRODUCED BY IMPACT.
6. IMPACT SURFACE AT LESS THAN 5° ANGLE.
7. IMPACT SURFACE AT LESS THAN 10° ANGLE.

#S1 USED SCALE #1

#S2 USED SCALE #2

Foam Compression Test Data Sheet
- 16-L-708 (8 pcf density) Foam
- Contained Specimens

	Set 2 – Contained Specimens	Specimen 2-1	Specimen 2-2	Specimen 2-3
#S1	13. Can empty weight (lbs)	.109	.109	.109
GC	14. Can volume (mL)	257	257	257
I	15. Volume of Component A / B in mixture (ml)	141 / 159 (.375/.375 LBS)	→	→
#S2	16. Weight of Vultafoam added to can (lbs)	.220	.224	.220
	17. Cure time (min)	160	160	160
#S1	18. Filled weight (lbs)	.224	.227	.225
HG	19. Foam height, Pre-drop (in)	2.700	2.582	2.695
	20. Heating/cooling time (min)	60	NA	60
T	21. Specimen temperature (°F)	-45	70	120
	22. Drop Bar Used	#2 (11.3 LBS)	#1 (4.4 LBS)	#1
Tm	23. Bar drop height (in)	48.75	40.18	56.75
HG	24. Foam height, Post-drop (in)	1.836	2.368	2.478
	OBSERVATIONS	2 5	3	3

Completed by: S. Gu Date: 15 OCT 98

Check by: MB Boyd Date: 15 Oct 98

Foam Compression Test Data Sheet
- 16-L-720 (20 pcf Density) Foam
- Free Rise

	Set 3 -- Free Rise Specimens	Specimen 3-1	Specimen 3-2	Specimen 3-3
#S1	25. Can empty weight (lbs)	.108	.109	.098
GC	26. Can volume (mL)	258	258	258
I	27. Volume of Component A / B in mixture (ml)	219 / 249 (.580 / .580 LBS)	→	→
#S2	28. Weight of Vultafoam added to can (lbs)	.372	.372	.346
	29. Cure time (min)	140	140	140
#S1	30. Filled weight (lbs)	.329	.329	.321
HG	31. Foam height, Pre-drop (in)	2.760	2.831	2.678
	32. Heating/cooling time (min)	60	NA	60
T	33. Specimen temperature (°F)	-50	70	134
	34. Drop Bar Used	#2 (11.3 LBS)	#2	#2
TM	35. Bar drop height (in)	99.00	67.63	99.00
HG	36. Foam height, Post-drop (in)	2.439	2.576	2.416
	OBSERVATIONS	2 5	3	3 7

Completed by: S. Gu[illegible] Date: 15 OCT 98

Check by: MBayd Date: 15 Oct 98

Foam Compression Test Data Sheet
- 16-L-720 (20 pcf Density) Foam
- Contained Specimen

	Set 4 -- Contained Specimens	Specimen 4-1	Specimen 4-2	Specimen 4-3
#S1	37. Can empty weight (lbs)	.098	.099	.099
GC	38. Can volume (mL)	257	257	257
I	39. Volume of Component A / B in mixture (ml)	227 / 258 (.600 / .602 LBS)	→	→
#S2	40. Weight of Vultafoam added to can (lbs)	.376	.376	.372
	41. Cure time (min)	130	130	130
#S1	42. Filled weight (lbs)	.331	.336	.359
HG	43. Foam height, Pre-drop (in)	2.706	2.708	2.725
	44. Heating/cooling time (min)	60	NA	60
T	45. Specimen temperature (°F)	-6.3	70	117
	46. Drop Bar Used	#2 (11.3 LBS)	#2	#2
Tm	47. Bar drop height (in)	99.13	84.25	99.00
HG	48. Foam height, Post-drop (in)	2.296	2.412	2.460
	OBSERVATIONS	2 5	4 6	4 6

Completed by: S. Gen Date: 15 OCT 98

Check by: MDBagel Date: 15 Oct 98

Foam Compression Test Data Sheet
- 16-L-708 (8 pcf Density) Foam
- Free Rise

	Set 1 -- Free Rise Specimens	Specimen ~~1-1~~ S-1	Specimen ~~1-2~~ S-2	~~Specimen 1-3~~
#S1	1. Can empty weight (lbs)	.098	.108	
G	2. Can volume (mL)	258	258	
I	3. Volume of Component A / B in mixture (ml)	133 / 150 (.354 / .354 LBS)	→	→
#S2	4. Weight of Vultafoam added to can (lbs)	.230	.170	
	5. Cure time (min)	135	135	
#S1	6. Filled weight (lbs)	.192	.202	
H6	7. Foam height, Pre-drop (in)	2.642	2.647	
	8. Heating/cooling time (min)	NA	NA	
T	9. Specimen temperature (°F)	71	71	
	10. Drop Bar Used	#1 (4.4 LBS)	#2 (11.3 LBS)	
TM	11. Bar drop height (in)	56.75	48.88	
H6	12. Foam height, Post-drop (in)	2.176	1.587	
	OBSERVATIONS	2	2	

Completed by: S. Gr[illegible] Date: 15 OCT 98

Check by: MBBoyd Date: 15 Oct 98

Foam Compression Test Data Sheet
- **16-L-708 (8 pcf density) Foam**
- **Contained Specimens**

	Set 2 – Contained Specimens	Specimen ~~2-1~~ 6-1	Specimen ~~2-2~~ 6-2	~~Specimen 2-3~~
#SV	13. Can empty weight (lbs)	.099	.098	
GC	14. Can volume (mL)	257	257	
I	15. Volume of Component A / B in mixture (ml)	134 / 150 (.354 / .358 LBS) →	→	
#S2	16. Weight of Vultafoam added to can (lbs)	.252	.226	
	17. Cure time (min)	155	155	
#SV	18. Filled weight (lbs)	.213	.213	
HG	19. Foam height, Pre-drop (in)	2.694	2.706	
	20. Heating/cooling time (min)	NA	NA	
T	21. Specimen temperature (°F)	70	71	
	22. Drop Bar Used	#2 (11.3 LBS)	#2	
TM	23. Bar drop height (in)	48.88	56.75	
HG	24. Foam height, Post-drop (in)	1.838	1.896	
	OBSERVATIONS	2	2	

Completed by: S. Gamini Date: 15 Oct 98

Check by: MBSigel Date: 15 Oct 98

Foam Compression Test Data Sheet
- 16-L-720 (20 pcf Density) Foam
- Free Rise

	Set 3 – Free Rise Specimens	Specimen ~~3-1~~ 7-1	Specimen ~~3-2~~ 7-2	~~Specimen 3-3~~
#S1	25. Can empty weight (lbs)	.098	.098	
GC	26. Can volume (mL)	258	258	
I	27. Volume of Component A / B in mixture (ml)	189 / 214 (.500 / .500 LBS) →	→	
#S2	28. Weight of Vultafoam added to can (lbs)	.374	.370	
	29. Cure time (min)	135	135	
#S1	30. Filled weight (lbs)	.315	.324	
HG	31. Foam height, Pre-drop (in)	2.812	2.813	
	32. Heating/cooling time (min)	NA	NA	
T	33. Specimen temperature (°F)	70	70	
	34. Drop Bar Used	#2 (11.3 LBS)	#2	
TM	35. Bar drop height (in)	98.75	98.88	
HG	36. Foam height, Post-drop (in)	2.463	2.430	
	OBSERVATIONS	4 5	2	

Completed by: S. Gaini Date: 15 OCT 98

Check by: [illegible] Date: 15 Oct 98

Foam Compression Test Data Sheet
- 16-L-720 (20 pcf Density) Foam
- Contained Specimen

	Set 4 -- Contained Specimens	Specimen ~~4-1~~ 8-1	Specimen ~~4-2~~ 8-2	~~Specimen 4-3~~
#S1	37. Can empty weight (lbs)	.098	.098	
GC	38. Can volume (mL)	257	257	
1	39. Volume of Component A / B in mixture (ml)	189 / 215 (.500 / .502 LBS)		
#S2	40. Weight of Vultafoam added to can (lbs)	.376	.376	
	41. Cure time (min)	125	125	
#S1	42. Filled weight (lbs)	.359	.360	
HG	43. Foam height, Pre-drop (in)	2.719	2.709	
	44. Heating/cooling time (min)	NA	NA	
T	45. Specimen temperature (°F)	70	70	
	46. Drop Bar Used	#2 (11.3 LBS)	#2	
TM	47. Bar drop height (in)	99.00	99.13	
HG	48. Foam height, Post-drop (in)	2.454	2.420	

OBSERVATIONS (4) (6) (4) (6)

Completed by: S. Grami Date: 15 OCT 98

Check by: MRBoyd Date: 15 Oct 98

TEST PLAN # 79
S. [illegible] 15 OCT 98

VOLUME OF COMPONENT A/B IN MIXTURE (mL)

16-L-708	A	(.4094 - .2768) = .1326 LBS. PER 50 mL	
	B	(.3922 - .2739) = .1183 PER 50 mL	
16-L-720	A	(.4093 - .2771) = .1322 PER 50 mL	
	B	(.3922 - .2756) = .1166 PER 50 mL	

Specimen 1-1 → 1-3 Batch. (wgt_A = .354 LBS, wgt_B = .354 LBS)			5-1 + 5-2 (wgt = .354 LBS)
16-L-708	A	(.354 / .1326) * 50 = 133 mL	133 mL
	B	(.354 / .1183) * 50 = 150 mL	150 mL
Specimen 2-1 → 2-3 Batch. (wgt_A = .375 LBS, wgt_B = .375 LBS)			6-1 + 6-2 (wgt = .356 LBS)
16-L-708	A	(.375 / .1326) * 50 = 141 mL	134 mL
	B	(.375 / .1183) * 50 = 159 mL	150 mL
Specimen 3-1 → 3-3 Batch (wgt_A = .580 LBS, wgt_B = .580 LBS)			7-1 + 7-2 (wgt = .500 LBS)
16-L-720	A	(.580 / .1322) * 50 = 219 mL	189 mL
	B	(.580 / .1166) * 50 = 249 mL	214 mL
Specimen 4-1 → 4-3 Batch (wgt_A = .601 LBS, wgt_B = .601 LBS)			8-1 + 8-2 (wgt = .501 LBS)
16-L-720	A	(.601 / .1322) * 50 = 227 mL	189 mL
	B	(.601 / .1166) * 50 = 258 mL	(50) 15 OCT 98 ~~258 mL~~ 215 mL

Effective Foam Density

Wgt of Foam = .203 − .108 = .095 LBS.

VOL OF CAN = 258 mL × 3.53×10^{-6} FT^3 = .009112 FT^3

1 mL = .00000353 FT^3

Density = .095 / .009112 = 10.43 LB/FT^3

ATTACHMENT B – EQUIPMENT CALIBRATION RECORDS

TEKSERV

127 Riverneck Road
Chelmsford, MA 01824
Telephone: 978 - 459-9480
FAX # 978 - 453-6336
WEBSITE: http://www.tekserv.com

CALIBRATION REPORT

ISO9002 REGISTERED COMPANY — ANSI-RAB — Certificate No. 10154

ISO9002 REGISTERED COMPANY — BS EN ISO 9002 Certificate No. 8229

SERVICE NUMBER:	SN-0226212
CONTRACT NUMBER:	SENTINEL

A59848

AEA TECHNOLOGIES
40 NORTH AVENUE

BURLINGTON MA 01803

DATE RECEIVED	CUSTOMER P.O.	ASSET NUMBER
10/08/98	2887	ENG-11

MANUFACTURER	
OMEGA	
MODEL	**SERIAL NUMBER**
TYPE K	NONE
DESCRIPTION	
THERMOCOUPLE	

TEMP.	HUMIDITY	PRIOR CAL.	CAL. CYCLE	DATE OF TEST	NEXT TEST DUE
23.00°C	50.00%		12 MO	10/08/98	10/08/99

WORK REQUESTED	SERVICES RENDERED	REMARKS
CALIBRATE/CERTIFY	CALIBRATED/CERTIFIED	READINGS AS RECEIVED

PROCEDURE USED	N.I.S.T. TEST NUMBER	TECHNICIAN
MANUFACTURER'S	413348-433349-259071-LRAN	POULIN

CALIBRATION CHECKED TO: MANUFACTURER'S SPECIFICATIONS ADJUSTED TO: MANUFACTURER'S SPECIFICATIONS

MANUFACTURER	MODEL	SERIAL	ACCURACY	DATE CALIBRATED
GUILDLINE	9540	52-310	MFG.	2/24/98

TEKSERV CERTIFIES THAT ALL CALIBRATION EQUIPMENT USED IN THE TEST IS TRACEABLE TO N.I.S.T. AND THE TEST WAS PERFORMED IN ACCORDANCE WITH MIL-STD-45662A, ISO9002, ISO-10012-1, ANSI/NCSL-Z540-1-1994.

CERTIFIED BY _____

READINGS AS
RECEIVED

TEKSERV
CALIBRATION DATA

Manufacturer: OMEGA
Serial Number : —
Date of Test : 10-9-98
Technician: M.P.
Prior cal: 9-25-97

Model : TYPE K
DATA AS RECEIVED ✓

Asset Number: ENG-11

THERMOCOUPLE 6 POINT CALIBRATION

T/C TYPE K

Standard	Measured value	Tolerance
-60.00	-56.3	AS-15
-40.00	-37.6	
0.00	0.6	
50.00	49.7	
100.00	99.9	
200.00	201.9	

See attached CALIBRATION REPORT for traceability information

tc.6pt

TEKSERV

127 Riverneck Road
Chelmsford, MA 01824
Telephone: 978 - 459-9480
FAX # 978 - 453-6336
WEB SITE: http://www.tekserv.com

CALIBRATION REPORT

ISO9002 REGISTERED COMPANY — Certificate No. 10164

ISO9002 REGISTERED COMPANY — BS EN ISO 9002 Certificate No. 6229

SERVICE NUMBER:	SN-0226210
CONTRACT NUMBER:	SENTINEL

A59847

AEA TECHNOLOGIES
40 NORTH AVENUE

BURLINGTON MA 01803

DATE RECEIVED	CUSTOMER P.O.	ASSET NUMBER
10/08/98	2887	ENG-12

MANUFACTURER	MODEL	SERIAL NUMBER
OMEGA	HH-21	T-179139

DESCRIPTION: THERMOMETER

TEMP.	HUMIDITY	PRIOR CAL.	CAL. CYCLE	DATE OF TEST	NEXT TEST DUE
23.00°C	30.00%	9/25/97	12 MO	10/08/98	10/08/99

WORK REQUESTED	SERVICES RENDERED	REMARKS
CALIBRATE/CERTIFY	CALIBRATED/CERTIFIED	IN TOLERANCE AS RCV'D

PROCEDURE USED	N.I.S.T. TEST NUMBER	TECHNICIAN
MANUFACTURER'S	413348-433349-259071-LRAN	POULIN

CALIBRATION CHECKED TO: MANUFACTURER'S SPECIFICATIONS ADJUSTED TO: MANUFACTURER'S SPECIFICATIONS

MANUFACTURER	MODEL	SERIAL	ACCURACY	DATE CALIBRATED
ANALOGIC	AN6520	8904010	MFG.	7/03/98

TEKSERV CERTIFIES THAT ALL CALIBRATION EQUIPMENT USED IN THE TEST IS TRACEABLE TO N.I.S.T. AND THE TEST WAS PERFORMED IN ACCORDANCE WITH MIL-STD-45662A, ISO9002, ISO-10012-1, ANSI/NCSL-Z540-1-1994.

CERTIFIED BY _____

IN TOLERANCE
AS RECEIVED

TEKSERV
CALIBRATION DATA

OMEGA Model HH-21
Serial Number: T 179139
Date of test: 10-8-98
Prior Cal: 9-25-97
Technician: M. P.

Data as Received ✓
Data After Adjustment
Data After Repair
Asset Number: ENG-12

Range	Reading	Specification
Deg.C Type J		
- 100.0	-99.6	+/-{0.1%rdg+0.5'C}
0.0	0.3	"
100.0	100.3	"
500.0	500.0	"
Deg.F Type J		
- 100.0	-99.3	+/-{0.1%rdg+1.0'F}
32.0	32.6	"
200.0	200.5	"
650.0	650.4	"
1200.0	1199.9	"
Deg.C Type K		
- 100.0	-99.5	+/-{0.1%RDG+0.5'C}
0.0	0.4	"
100.0	100.4	"
600.0	599.9	"
1000.0	1000.2	"
Deg.F Type K		
- 100.0	-99.1	+/-{0.1%rdg+1.0'F}
32.0	32.9	"
200.0	200.7	"
600.0	600.4	"
1600.0	1600.5	"
Deg.C Type T		
- 100.0	-99.5	+/-{0.1%rdg+0.5'C}
0.0	0.3	"
100.0	100.2	"
350.0	350.1	"
Deg.F Type T		
- 100.0	-99.4	+/-{0.1%rdg+1.0'F}
32.0	32.5	"
100.0	100.3	"
500.0	500.3	"

Mettler-Toledo, Inc.
Scales & Systems

METTLER TOLEDO

CERTIFICATE OF CALIBRATION No.:01492-97

This is to certify that the below listed weighing equipment was tested and found to be within the NIST tolerances according to the requirements listed in NIST Handbook 44 for weighing devices and in accordance with MIL-STD 45662A. See the Test Record and Service Report for details on errors found and corrections made.

Model #	Serial #	ID	Location	Capacity	Inspector	Next Date Due
10100	242		SHIPPING	100 LB	LEO A.	11/98
DWM-IV	F16383		SHIPPING	5000 LB	"	11/98
DS10	35014		QC	110 LB	"	11/98
4010	1126131		QC	125 LB	"	11/98
8920	267		QC	200 LB	"	11/98
DYNO	D3500		QC	500 LB	"	11/98
8582	2642125		STK RM	10 LB	"	11/98
8200	SR81840011		STK RM	10 LB	"	11/98
500C	834468		STK RM	500 GR	"	11/98
2K BEAM	L482397		ASSEMBLY	2000 LB	"	11/98

Date Test Performed: 5/6/98

Purchase Order No.:
Note: This document may be reproduced and a copy placed at each device if required.

METTLER TOLEDO INC. Steven Sawyer
(Service Manager)

Date: 10/9/98

Corporate Offices: 350 W. Wilson Bridge Rd. Worthington, OH 43085 Tel: (614) 438-4511 FAX: (614) 438-4900

This proposal is expressly conditioned on the purchaser's acceptance of Mettler Toledo's Standard Terms and Conditions of Sale appearing on the reverse hereof which shall take precedence and govern over any Terms and Conditions of customer to the contrary.

CUSTOMER: Amersham Corp

METTLER TOLEDO INC.
TEST RECORD AND SERVICE REPORT

PAGE 1 OF 1

DUE DATE

STREET ADDRESS: 40 North Ave

CUSTOMER CONTACT: Dave Annis

CITY & STATE: Burlington MA

DUE DATE 11-8-98 DATE SERVICE RENDERED: 5-8-98

	SCALE IDENTIFICATION				CHART/INDIC.		LOCATION OF SCALE	TEST LOAD APPLIED					CORR		SERVICES RENDERED; PARTS
	MODEL	SERIAL #	MAKE	I.D. #	CAP.	GRAD.		ERROR IN GRADUATIONS					Y	N	
1	DLAMIV	F16383	Flex Weigh	F16383	5K lb	1 lb	Shipping	0/0	100/0	200/0	300/0	500/0		✓	CAL OK
2	DEC4848	12486		1"	5K lb	BASE		550/0	550/0	550/0	550/0	—		✓	Shift good.
3	10100	242	Peloozie	242	100 lb	4 oz		0/±6	25/+1	50/0	75/0	100/0	✓		NOTES
4								—	—	—	—	—			
5	4010	1126131	Peloozie	1126131	125 lb	.2 lb	QC	~~250~~ 0/0	25/0	50/0	75/0	100/+1		✓	CAL OK
6	DS10	35014	OHAUS	3501	110 lb	.05 lb		0/0	25/-4	50/-8	75/-11	100/-13	✓		RECALIBRATED
7	8920	267	HANSON	267	200 lb	1 lb		0/0	50/0	100/0	150/0	200/0		✓	CAL OK
8	DYNO	D3500	Dillion	D3500	500 lb	2 lb		0/0	100/+1	200/+1	300/0	500/+1		✓	CAL IN SPEC
9								—	—	—	—	—			
10	8200	SR8724001	NCI	269	10 lb	.002 lb	STOCK RM	0/0	2.5/0	5.0/0	7.5/0	10.0/+1		✓	CAL OK
11	500C	834468	SETRA	834468	500 g	.001 g		0	100/+5	200/0	300/+4	500/-2	✓		RECALIBRATED.
12	8582	2642125	TOLEDO	268	10 lb	.001 lb		0/0	2.5/0	5.0/0	7.5/0	10.0/-1		✓	CAL OK
13								—	—	—	—	—			
14	2K Beam	L482397	NES	L482397	2K lb	.5 lb	Assembly	0/+3	100/0	200/0	300/0	500/0	✓		REZERO
15								—	—	—	—	—			Checked all Counter Weights

REMARKS: 3) Rubbing on plastic lens, caved in, removed popped out and reinstalled

AL

TECHNICIAN Les Archambault

CUSTOMER SIGNATURE: Dave Annis 8 MAY 98

TRACEABILITY #:

PROCEDURE #: Q032-07

Established in 1972

HUNT METROLOGY SERVICE, INC.
175 Jackson St. Methuen, MA 01844-5042
Phone: (978) 688-7278 Fax: (978) 794-4632

Calibration Certificate

Company Name: **AEA TECHNOLOGY**
Address: **40 NORTH AVENUE**
BURLINGTON, MA. 01803

Calibration No: **HMSCC-09028**
Dated: **AUG 3-7, 1998**
Pages: **62**

Department:

Phone No.: **(781) 272-2000** Ext:

Fax No.: **(781) 273-2216**

Attention: **DAVE ANNIS**
P.O. No.: **2603**
Technician: **DAVID DICKINSON**

The calibration performed on the following measuring and test equipment (M&TE) of this document are traceable to the National Institute of Standards and Technology (N.I.S.T.) through N.I.S.T. test number 821/256504-96; Dated February 26, 1997 for dimensional calibration, and/or through N.I.S.T. test number 822/254480 dated February 26, 1997 for mass calibration.

The M&TE have been cleaned and lubricated, as needed. Our technician(s) have calibrated, adjusted and/or reset the M&TE, affixed a calibration label to the M&TE, updated the corresponding record(s), and provided this calibration certificate.

The standard(s) utilized to perform the calibration have been calibrated, certified and maintained in our laboratory which sustains a temperature of 68 degrees (+/- 2 degrees F.) and less than 50% relative humidity. All records pertaining to our standards, and the masters utilized to calibrate them, are kept on file in our laboratory for a period of no less than 3 years.

The services provided, traceability to the N.I.S.T., and Hunt Metrology Service's calibration system comply with the requirements of ANSI/NCSL Z540-1-1994 and ISO 10012-1:1994(E).

The reported value is both "as found" and "as left" data, unless otherwise specified. A calibration uncertainty ratio of at least 4:1 is maintained unless otherwise stated.

This calibration certificate cannot, in any way, be reproduced, except in full, without prior written consent from a representative of Hunt Metrology Service, Inc.

Keith R. Young
Technical Manager

Hunt Metrology Service, Inc. Data Sheet HMSCC: 09028 Page 1

Customer: AEA TECHNOLOGY P.O. No.: 2603

Date Cal: 08/06/98
Date Due: 08/06/99

ID.No.: 027 (A) Manufacturer: MITUTOYO
2 ID.No.: Serial No.: 701046 Technician: DD
Department: QC Model No.: 543-425-1 Cal. Proc. No: 30
Deviation u.: Standard No.: 012 Cal.: 04/08/98 Due: 10/30/98
Accuracy: +/-0.000 10" Standard No.: Cal.: Due:
Accuracy: Standard No.: Cal.: Due:
Standard No.: Cal.: Due:

Gage Type: 0-2.0" DIGITAL INDICATOR (PART 1 OF 2)

Required:	0	0.010"	0.025"	0.050"	0.100"	0.250"	0.500"	0.750"
Deviation:	REF	0	0	0	0	0	0	-.0001
Measured:	REF	0.010"	0.025"	0.050"	0.100"	0.250"	0.500"	0.7499"

Customer: AEA TECHNOLOGY P.O. No.: 2603

Date Cal: 08/06/98
Date Due: 08/06/99

ID.No.: 027 (B) Manufacturer: MITUTOYO
2 ID.No.: Serial No.: 701046 Technician: DD
Department: QC Model No.: 543-425-1 Cal. Proc. No: 30
Deviation u.: Standard No.: 012 Cal.: 04/08/98 Due: 10/30/98
Accuracy: +/-0.000 10" Standard No.: Cal.: Due:
Accuracy: Standard No.: Cal.: Due:
Standard No.: Cal.: Due:

Gage Type: 0-2.0" DIGITAL INDICATOR (PART 2 OF 2)

Required:	1.0	1.25	1.50	1.75	2.00
Deviation:	0	0	+.00010"	0	0
Measured:					

ATTACHMENT C – CALCULATION OF VOLUME RATIOS

Values are estimates of true device volume based on design drawings and engineering judgement

Model 680 Projector

Shell volume (internal):

$L \times W \times H = 13.88 \times 13.63 \times 9.94 = 1880.5\ in^3$

Shield volume:

Weight /Density = 292 lbs./0.683 lbs./in^3 = 427.5 in^3

Void volume:

Shell volume – Shield volume = 1880.5 – 427.5 = 1453 in^3

Proportion

14.44 in^3 / 1453 in^3 = 0.01 = 1%

Model 650 Projector

Shell volume (internal):

$V = \pi(3.719)^2 (8.25 - 2(0.5)) = 315\ in^3$

Shield volume:

Weight /Density = 42 lbs./0.683 lbs./in^3 = 61.5 in^3

Void volume:

Shell volume – Shield volume = 315 – 61.5 = 253.5 in^3

Volume Ratio

14.44 in^3 / 253.5 in^3 = 0.057 = 5.7%

ATTACHMENT D – EFFECTIVE DENSITY CALCULATIONS

Table 1. Calculation Table

Set No.	Specimen No.	Container Empty Weight (lbs) (A)	Container Volume (mL) (B)	Container Filled Weight (lbs) (C)	Effective Density* (lb/ft^3) (C-A)/B * 28321
1	1	.108	258	.203	10.4
	2	.099	258	.191	10.1
	3	.098	258	.191	10.2
2	1	.109	257	.224	12.7
	2	.109	257	.227	13.0
	3	.109	257	.225	12.8
3	1	.108	258	.329	24.3
	2	.109	258	.329	24.1
	3	.098	258	.321	24.5
4	1	.098	257	.331	25.7
	2	.099	257	.336	26.1
	3	.099	257	.359	28.7
5	1	.098	258	.192	10.3
	2	.108	258	.202	10.3
6	1	.099	257	.213	12.6
	2	.098	257	.213	12.7
7	1	.098	258	.315	23.8
	2	.098	258	.324	24.8
8	1	.098	257	.359	28.8
	2	.098	257	.360	28.9

* 28,321 mL = 1 ft^3

2.12.9 Technical Report 171 Sentry Transport Package Lifting Analysis dated 30 Jun 2010

QSA GLOBAL

Technical Report No. 171

QSA GLOBAL, Inc.

Engineering Department

Technical Report

SENTRY Transport Package Lifting Analysis

Prepared by:	Steve Gianni	**Date:**	24 JUN 2010
Checked by:	Dwain Giamond	**Date:**	24 JUN 2010
Regulatory Approval:	R. Parker	**Date:**	30 Jun 2010
Engineering Approval:	Dan Hall	**Date:**	24 Jun 2010

1.0 Purpose:

This report documents an analysis performed on the SENTRY transport package to the lifting requirements of 10 CFR Part 71.45 (a).

2.0 SENTRY Transport Package Lifting Provisions:

The SENTRY transport package in the Standard configuration is equipped with four identical, multi-purpose Lifting/Tie-Down provisions symmetrically located around the package. Half of each lifting provision is attached to the upper portion of the cylindrically shaped welded body by three high strength bolts, two on the top flat surface and one on the curved side surface of the body. The other half of the provision is attached to the body in the same manner, but with two bolts attached to the bottom and one attached to the side of the body. See Figure 1.

The two halves of the provision are connected together by a link plate attached to each half by a load pin. The strength of the two load pins is only needed when the package is lifted using the link plate. Lifting the package with the link plate is not recommended, but this part of the provision still needs to meet the lifting requirement of 10 CFR part 71.45 (a). The recommended lifting method is to lift the package by looping high capacity straps or chains with or without a pivoting shackle through the large hole in the upper lifting provision.

The bottom end also includes a very large hex nut and bolt for added strength in emergency situations. The large hex nut and bolt will recruit the lower half of the provision if a rapid, high loading (snatch) condition occurs.

The SENTRY transport package in the Basic configuration has an array of Rivnuts for attaching a properly rated hoist ring for lifting. See Figure 10 & 11.

The center of gravity (CG) of the 780 pound (maximum) package is located approximately at its geometric center.

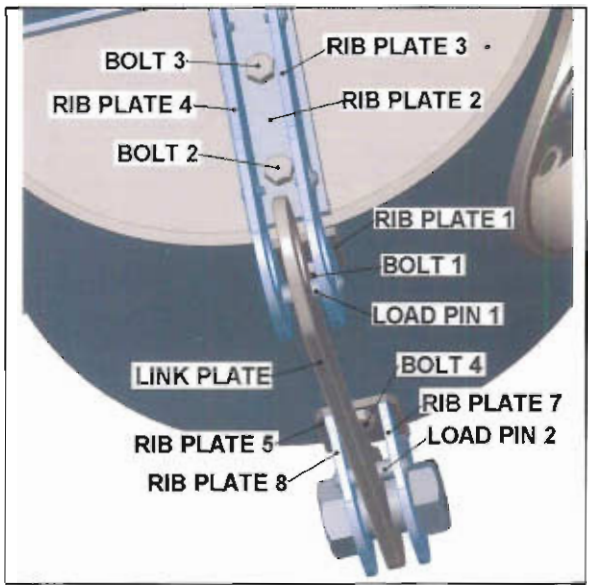

Figure 1 SENTRY Lifting Provision (1 of 4) Standard Configuration

Table 1 Lifting/Tie-Down Provision Materials List

Component Name	Material	Condition	ASTM Spec	Minimum Yield Strength, psi
Rib Plate 1 thru 8	17-4 PH STN STL	H1025	A693	145,000
Link Plate	17-4 PH STN STL	H900	A693	170,000
Bolts 1 thru 8	17-4 PH STN STL	AH	F593	105,000
Load Pin 1 & 2	17-4 PH STN STL	H900	A693	170,000
Rivnuts 1 thru 8	316 STN STL	CW	A276	93,694

3.0 Transport Lifting Requirement:

10 CFR Part 71.45 (a): Any lifting attachment that is a structural part of a package must be designed with a **minimum safety factor of three against yielding** when used to lift the package in the intended manner, and it must be designed so that **failure** of any lifting device under excessive load **would not impair the ability of the package to meet other requirements** of this subpart. Any other structural part of the package that could be used to lift the package must be capable of being rendered inoperable for lifting the package during transport, or must be designed with strength equivalent to that required for lifting attachments.

4.0 Assumptions:

1. Temperature range equal to -40 to +130 F.
2. No corrosion exists on the rib assembly and fastener components.
3. Only one lifting provision carries the load in the lifting analysis.

5.0 Analysis – Rib Assembly Lifting:

The SENTRY lifting provision or rib assembly is a structural part of the package. However, it is designed to be intentionally removed without affecting the ability of the package to meet other requirements of 10 CFR Part 71.

Lifting the transport package by only one lifting provision (rib assembly) can be considered the worst case for lifting the package. The maximum tensile load applied to the single lifting provision is equal to the maximum weight of the package or 780 lbs. See figure 2 through 4.

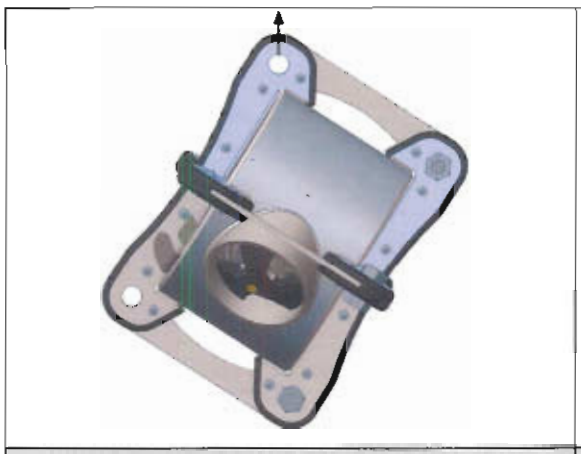

Figure 2 SENTRY Lifting from a Single Rib Assembly

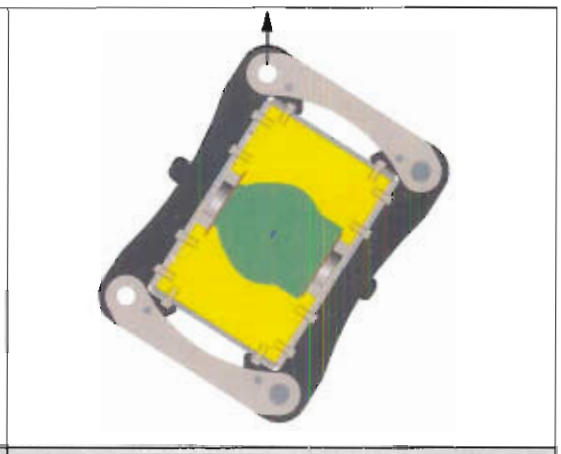

Figure 3 SENTRY Lifting from a Single Rib Assembly – Section View

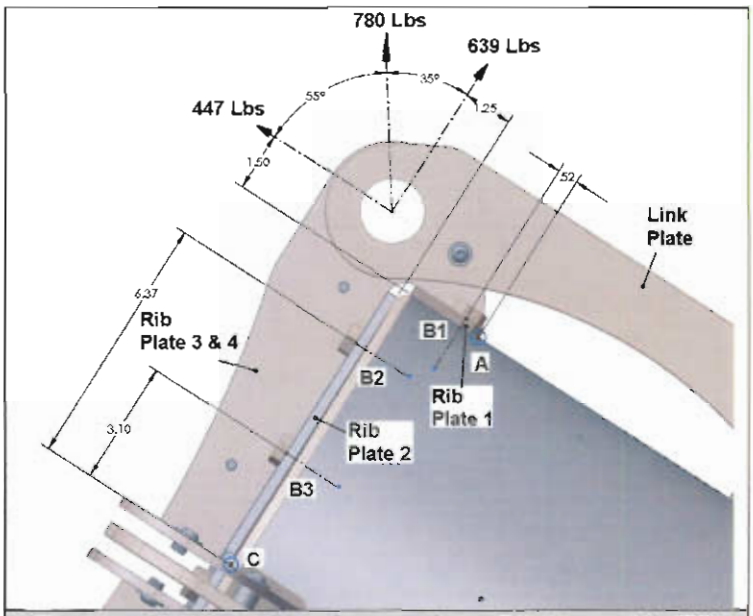

Figure 4 SENTRY Lifting from a Single Rib Assembly (Rib Plate 4 not shown) – Close-up View

The rib assembly consists of two vertical parallel plates welded to a flat horizontal plate with two mounting holes and one perpendicular plate with one mounting hole. The vertical plates are separated by a gap to allow three hex bolts to be inserted between them. The bolts pass through the mounting holes and mate into the Rivnuts. The Rivnuts are riveted into the cylindrical welded body of the transport package.

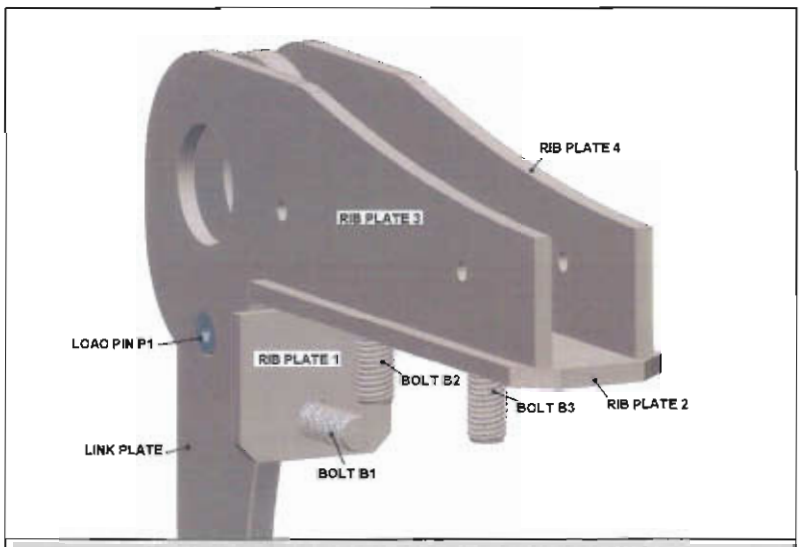

Figure 5 SENTRY Rib Assembly Close-up

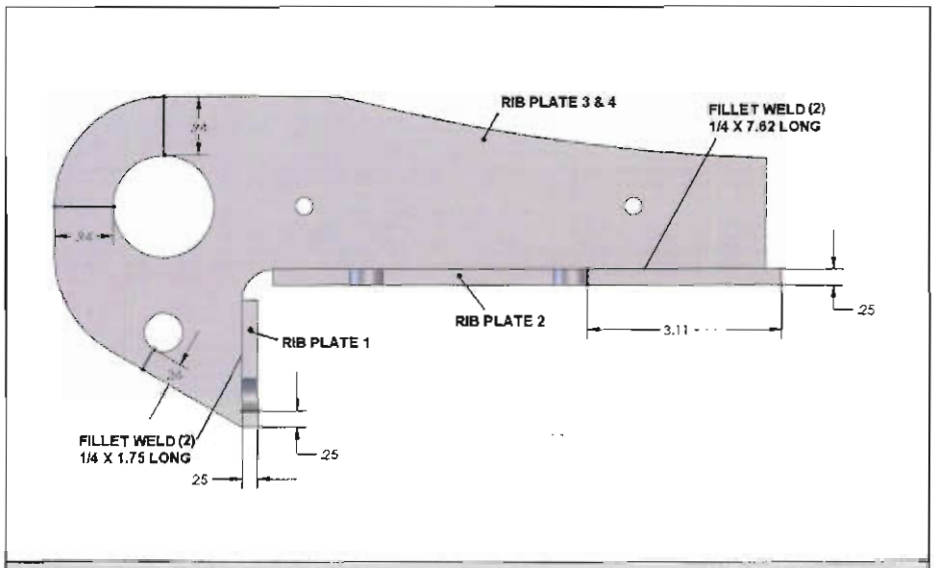

Figure 6 SENTRY Rib Assembly showing relevant dimensions

6.0 Results – Rib Assembly Lifting:

Table 2 is a summary comparing calculated factor of safeties against the required factor of safety, 3, when lifting the package by only one rib assembly as shown in Figure 4. See Appendix A for the detailed calculations. Table 2 reveals "Bolt B1 Tensile or Shear" is the worst case loading condition resulting in a calculated factor of safety equal to 8. This is over 2 times the required factor of safety of 3.

Table 2 Summary of SENTRY Lifting by Rib Analysis per 10 CFR Part 71.45(a)			
Failure Mode	**Calculated Factor of Safety**	**Required Factor of Safety**	**Pass/Fail**
Rib Plates 3 & 4 Shear Tear-out	87	3	Pass
Rib Plate 1 Shear Tear-out	20		Pass
Rib Plate 1 Bearing Failure	34		Pass
Rib Plate 1 Tensile Failure	139		Pass
Rivnut 1,2,&3 Thread Shear Strip	85		Pass
Rib Plate 2 Shear Tear-out	176		Pass
Rib Plate 2 Bearing Failure	24		Pass
Rib Plate 2 Tensile Failure	98		Pass
Bolt B1 Tensile Failure	8		Pass
Bolt B1 Shear Failure	8		Pass
Bolt B1 Thread Bearing Stress	75		Pass
Bolt B1 Thread Shear Strip	34		Pass
Bolt B2 Tensile Failure	79		Pass
Bolt B2 Shear Failure	49		Pass
Bolts B2 & B3 Thread Bearing Stress	320		Pass
Bolts B2 & B3 Thread Shear Strip	145		Pass
Rib Plate Weld – 639 Lbs Direction	306		Pass
Rib Plate Weld – 447 Lbs Direction	100		Pass
See Appendix A - Lifting by Rib Assembly Calculations			

7.0 Analysis – Link Plate Lifting:

The link plate is not recommended to be used as a lifting provision. However, if the package is lifted by the link plate, then it shall also meet the lifting requirements of 10 CFR Part 71.45(a).

Figures 7 through 9 show the transport package lifted by the link plate.

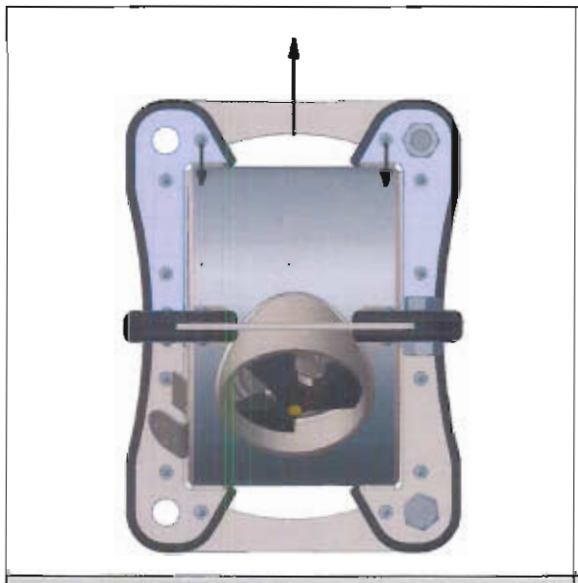

Figure 7 SENTRY Lifting from a Single Link Plate

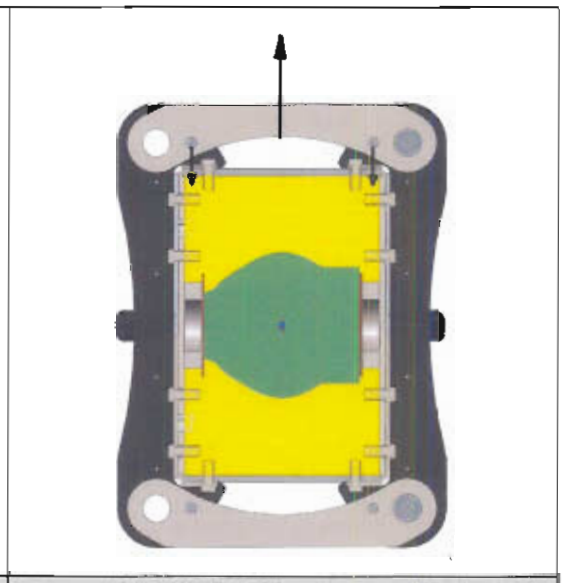

Figure 8 SENTRY Lifting from a Single Link Plate – Section View

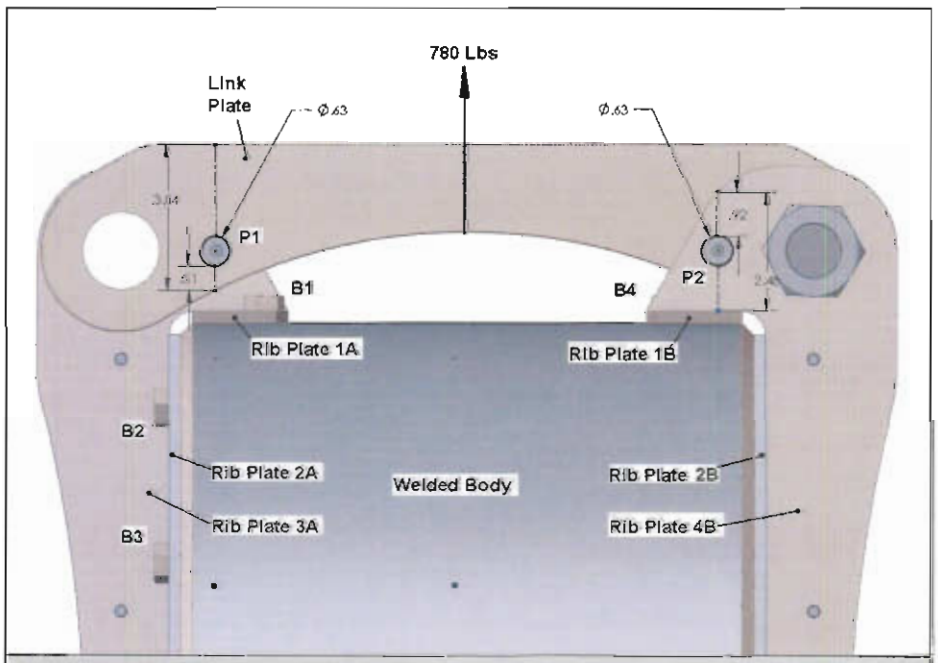

Figure 9 SENTRY Lifting from a Link Plate – Close-up Section View

8.0 Results – Link Plate Lifting:

Table 3 is a summary comparing calculated factor of safeties against the required factor of safety, 3, when lifting the package by only one link plate as shown in Figure 9. See Appendix B for the detailed calculations. Table 3 reveals "Bolt B1 or B4 Tensile Failure" is the worst case loading condition resulting in a calculated factor of safety equal to 38. This is over 12 times the required factor of safety of 3. The calculation for this loading condition is conservative since it did not take into consideration the load sharing provided by bolts B2, B3, B5 & B6 in the load direction.

Table 3 Summary of SENTRY Lifting by Link Analysis per 10 CFR Part 71.45(a)			
Failure Mode	**Calculated Factor of Safety**	**Required Factor of Safety**	**Pass/Fail**
Link Plate Tensile Failure - Midsection	151	3	Pass
Link Plate Shear Tear-out	84		Pass
Link Plate Bearing Failure	96		Pass
Link Plate Tensile Failure	399		Pass
Load Pin P1 or P2 Double Shear	230		Pass
Rib Plate 2 Shear Tear-out Failure	289		Pass
Rib Plate 2 Bearing Failure	39		Pass
Rib Plate 2 Tensile Failure	160		Pass
Bolt B1 or B4 Tensile Failure	38		Pass
Rib Plate 3 & 4 Shear Tear-out Failure	171		Pass
Rib Plate 3 & 4 Bearing Failure	108		Pass
Rib Plate 3 & 4 Tensile Failure	345		Pass
Rib Plate Weld – Lift Direction	501		Pass
See Appendix B - Lifting by Link Plate Calculations			

9.0 Analysis – Rivnut Lifting:

The Rivnut can be used for lifting the package in the basic configuration. Lifting the package by one Rivnut is the worst case lifting condition for this configuration. See Figures 10 & 11.

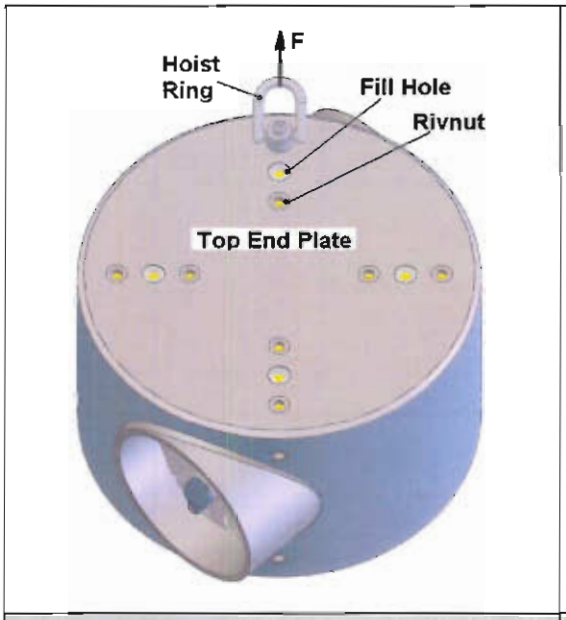

Figure 10 SENTRY Lifted by a Single Rivnut

Figure 11 SENTRY Lifted by a Single Rivnut –Side View

10.0 Results – Rivnut Lifting:

Table 4 is a summary comparing calculated factor of safeties against the required factor of safety, 3, when lifting the package by only one link plate as shown in Figures 10 & 11. See Appendix C for the detailed calculations. Table 4 reveals "Rivnut 1 Shear Failure" is the worst case loading condition resulting in a calculated factor of safety equal to 7. This is over 2 times the required factor of safety of 3.

Table 4 Summary of SENTRY Lifting Rivnut Analysis per 10 CFR Part 71.45(a)

Failure Mode	Calculated Factor of Safety	Required Factor of Safety	Pass/Fail
Rivnut 1 Shear Failure	7	3	Pass
Rivnut 1 Thread Shear Strip	33		Pass
See Appendix C - Lifting by Rivnut Calculations			

11.0 Final Assessment:

The SENTRY transport package in the Standard Configuration lifted by either the rib assembly or the link plate and the package in Basic configuration lifted by one Rivnut meets the lifting requirements of 10 CFR Part 71.45 (a). No failure mode was found to be less than 3 against yielding when lifting the package by a rib assembly, link plate or Rivnut.

If the lifting provision were to fail due to excessive loading, the package is designed so that the failed provision would not impair the ability of the package to meet the other requirements of 10 CFR Part 71.

Appendix A - Lifting by Rib Assembly Calculations

Determine Rib Plates 3&4 Shear Tearout Failure			
Rtfs =	830	psi	= Tensile Stress = Fn/(2*L*t)
F =	780	Lbf	= Max Package Weight (Std Config)
Fn =	390	Lbf	= Load shared by plates 3 & 4 = F/2
t =	0.25	in	= Plate thickness
L =	0.94	in	= Distance from hole to plate edge
Ysr =	*145000*	psi	= Allowable Yield Strength
Ssr =	72500	psi	= Allowable Shear Strength = Ysr/2
Fs =	87		= Factor of Safety = Ssr/Rtfs

Determine Rib Plate 1 Shear Tearout Failure			
Rsts =	3576	psi	= Calc Shear Stress = Fd/(2*L*t)
F =	780	Lbf	= Max Package Weight (Std Config)
Fd =	447	Lbf	= Load Normal to Rib Plate 2
t =	0.25	in	= Plate thickness
L =	0.25	in	= Distance from hole to Rib 1 edge
Ysr =	*145000*	psi	= Allowable Yield Strength
Ssr =	72500	psi	= Allowable Shear Strength = Ysr/2
Fs =	20		= Factor of Safety = Ssr/Rsts

Determine Rib Plate 1 Bearing Failure			
Rbfs =	4237	psi	= Calc Bearing Stress = Fd/(d*t)
F =	780	Lbf	= Max Package Weight (Std Config)
Fd =	447	Lbf	= Load Normal to Rib Plate 2
t =	0.25	in	= Plate thickness
d =	0.42	in	= Bolt minor diameter
Ysr =	*145000*	psi	= Allowable Yield Strength
Fs =	34		= Factor of Safety = Ysr/Rbfs

Determine Rib Plate 1 Tensile Failure			
Rtfs =	1040	psi	= Tensile Stress = Fd/((w-d)*t)
F =	780	Lbf	= Max Package Weight (Std Config)
Fd =	447	Lbf	= Load Normal to Rib Plete 2
t =	0.25	in	= Plate thickness
d =	0.53	in	= Hole diameter
w =	2.25	in	= Plate width
Ysr =	*145000*	psi	= Allowable Yield Strength
Fs =	139		= Factor of Safety = Ysr/Rtfs

Determine Rivnut 1,2&3 Thread Shear Strip			
Nts =	534	psi	= Calc Shear Stress = Fn/(Pi*dn*(h/2))
F =	780	Lbf	= Max Package Weight (Std Config)
Fn =	260	Lbf	= Load shared by 3 Rivnuts = F/3
dn =	0.50	in	= Nut root diameter
Pi =	3.14	in	= Constant
h =	0.62	in	= Nut engagement
Ysn =	*90435*	psi	= Allowable Yield Strength
Ssn =	45217	psi	= Allowable Shear Strength = Ysn/2
Fs =	85		= Factor of Safety = Ssn/Nts

Determine Rib Plate 2 Shear Tearout Failure			
Rsts =	411	psi	= Calc Shear Stress = Fd/(2*L*t)
F =	780	Lbf	= Max Package Weight (Std Config)
Fd =	639	Lbf	= Load Normal to Rib Plate 1
t =	0.25	in	= Plate thickness
L =	3.11	in	= Distance from hole to Rib 2 edge
Ysr =	*145000*	psi	= Allowable Yield Strength
Ssr =	72500	psi	= Allowable Shear Strength = Ysr/2
Fs =	176		= Factor of Safety = Ssr/Rsts

Determine Rib Plate 2 Bearing Failure			
Rbfs =	6057	psi	= Calc Bearing Stress = Fd/(d*t)
F =	780	Lbf	= Max Package Weight (Std Config)
Fd =	639	Lbf	= Load Normal to Rib Plate 1
t =	0.25	in	= Plate thickness
d =	0.42	in	= Bolt minor diameter
Ysr =	*145000*	psi	= Allowable Yield Strength
Fs =	24		= Factor of Safety = Ysr/Rbfs

Determine Rib Plate 2 Tensile Failure			
Rtfs =	1486	psi	= Tensile Stress = Fd/((w-d)*t)
F =	780	Lbf	= Max Package Weight (Std Config)
Fd =	639	Lbf	= Load Normal to Rib Plate 1
t =	0.25	in	= Plate thickness
d =	0.53	in	= Hole diameter
w =	2.25	in	= Plate width
Ysr =	*145000*	psi	= Allowable Yield Strength
Fs =	98		= Factor of Safety = Ysr/Rtfs

Determine Bolt 1 Tensile Failure (Combined Stress)			
B1ms=	13161	psi	=Max Tensile Stress on Bolt 1 = B1st/(Sqrt((B1st/2)^2 + Bss^2))
B1st =	12990	psi	= Calc Tensile Stress = Fp/A
Fd =	639	Lbf	= Load Normal to Rib Plate 1
Fp =	1843	Lbf	= Moment Load on Bolt 1 = M*Lx
A =	0.14	in^2	= Bolt Stress Area
M =	959	in-Lt	= Moment = Fd*Lm
Lm =	1.50	in	= Moment Arm
Lx =	0.52	in	= Bolt Distance to pivot point (A)
Ysb =	*105000*	psi	= Allowable Yield Strength
Fs =	8		= Factor of Safety = Ysb/B1ms

Determine Bolt 1 Shear Failure (Combined Stress)			
B1ss=	6666	psi	= Max Shear Stress on Bolt 1 = Sqrt ((B1st/2)^2 + Bss^2)
Bss =	1501	psi	= Calc Tensile Stress = Fn/A
Fd =	639	Lbf	= Load Normal to Rib Plate 1
Fn =	213	Lbf	= Load shared by 3 bolts = F/3
A =	0.14	in^2	= Bolt Stress Area
Ysb =	*105000*	psi	= Allowable Yield Strength
Ssb =	52500	psi	= Allowable Shear Strength = Ysb/2
Fs =	8		= Factor of Safety = Ssb/B1ss

Determine Bolt 1 Thread Bearing Stress			
Btbs =	1405	psi	= Thread Bearing Stress = Fd/ ((Pi/4)*(d^2-dr^2)*(h/p))
Fd =	639	Lbf	= Load applied in Rib Plate 2 direction
dr =	0.42	in	= Bolt root diameter
d =	0.50	in	= Bolt outer diameter
Pi =	3.14	in	= Constant
h =	0.62	in	= Nut engagement
p =	0.08	in	= Thread pitch = 1/13
Ysb =	*105000*	psi	= Allowable Yield Strength
Fs =	75		= Factor of Safety = Ysb/Btbs

Determine Bolts 1 Thread Shear Strip			
Bts =	1555	psi	= Calc Shear Stress = Fd/(PI*dr*(h/2))
Fd =	639	Lbf	= Load applied in Rib Plate 2 direction
dr =	0.42	in	= Bolt root diameter
Pi =	3.14	in	= Constant
h =	0.62	in	= Nut engagement
Ysr =	*105000*	psi	= Allowable Yield Strength
Ssr =	52500	psi	= Allowable Shear Strength = Ysb/2
Fs =	34		= Factor of Safety = Ssb/Bts

Determine Bolt 2 Tensile Failure (Combined Stress)			
B2ms=	1329	psi	=Max Tensile Stress on Bolt 2 = B2st/(Sqrt($(B2st/2)^2 + Bss^2$))
B2st =	500	psi	= Calc Tensile Stress = Fp/A
Fd =	447	Lbf	= Load Normal to Rib Plate 2
Fp =	71	Lbf	= Proportion of load on Bolt2 = M*L2/SLx
A =	0.14	in^2	= Bolt Stress Area
M =	559	in-Lb	= Moment = F*Lm
Lm =	1.25	in	= Moment Arm
SLx =	50.19	in^2	= Bolt Distances Sumed $(L2^2)+(L3^2)$
Ysb =	*105000*	psi	= Allowable Yield Strength
Fs =	79		= Factor of Safety = Ysb/B2ms

Determine Bolt 2 Shear Failure (Combined Stress)			
B2ss=	1079	psi	= Max Shear Stress on Bolt 2 = Sqrt ($(B2st/2)^2 + Bss^2$)
Bss =	1050	psi	= Calc Tensile Stress = Fn/A
Fd =	447	Lbf	= Load Normal to Rib Plate 2
Fn =	149	Lbf	= Load shared by 3 bolts = F/3
A =	0.14	in^2	= Bolt Stress Area
Ysb =	*105000*	psi	= Allowable Yield Strength
Ssb =	52500	psi	= Allowable Shear Strength = Ysb/2
Fs =	49		= Factor of Safety = Ssb/B2ss

Determine Bolt 2 & 3 Thread Bearing Stress			
Btbs =	328	psi	= Thread Bearing Stress = Fn/ $((Pi/4)*(d^2-dr^2)*(h/p))$
Fd =	447	Lbf	= Load applied in Rib Plate 1 direction
Fn =	149	Lbf	= Load shared by 3 bolts = Fd/3
dr =	0.42	in	= Bolt root diameter
d =	0.50	in	= Bolt outer diameter
Pi =	3.14	in	= Constant
h =	0.62	in	= Nut engagement
p =	0.08	in	= Thread pitch = 1/13
Ysb =	*105000*	psi	= Allowable Yield Strength
Fs =	320		= Factor of Safety = Ysb/Btbs

Determine Bolts 2 & 3 Thread Shear Strip			
Bts =	363	psi	= Calc Shear Stress = Fn/(Pi*dr*(h/2))
Fd =	447	Lbf	= Load applied in Rib Plate 1 direction
Fn =	149	Lbf	= Load shared by 3 bolts = Fd/3
dr =	0.42	in	= Bolt root diameter
Pi =	3.14	in	= Constant
h =	0.62	in	= Nut engagement
Ysb =	*105000*	psi	= Allowable Yield Strength
Ssb =	52500	psi	= Allowable Shear Strength = Ysb/2
Fs =	145		= Factor of Safety = Ssb/Bts

Determine **Rib Plate Weld** Shear Failure - 639 Lbs Direction			
Rws =	237	psi	= Tensile Stress = Fn/(Lw*Tw)
F =	639	Lbf	= Applied Load
Fn =	320	Lbf	= Load shared by 2 weld lengths = F/2
hs =	0.25	in	= Weld Size
Lw =	7.62	in	= Total Weld Length - 639 Lbs Direction
Tw =	0.18	in	= Weld Throat Dimension = .7071*hs
Ysr =	*145000*	psi	= Allowable Yield Strength
Ssr =	72500	psi	= Allowable Shear Strength = **Ysr/2**
Fs =	306		= Factor of Safety = Ssr/Rws

Determine **Rib Plates Weld** Shear Failure - 447 Lbs Direction			
Rws =	722	psi	= Tensile Stress = Fn/(Lw*Tw)
F =	447	Lbf	= Applied Load
Fn =	224	Lbf	= Load shared by 2 weld lengths = F/2
hs =	0.25	in	= Weld Size
Lw =	1.75	in	= Total Weld Length - 447 Lbs Direction
Tw =	0.18	in	= Weld Throat Dimension = .7071*hs
Ysr =	*145000*	psi	= Allowable Yield Strength
Ssr =	72500	psi	= Allowable Shear Strength = **Ysr/2**
Fs =	100		= Factor of Safety = Ssr/Rws

Appendix B - Lifting by Link Plate Calculations

Determine Link Plate Tensile Failure at Midsection			
Lts =	1128	psi	= Calc Tensile Stress = F/A
F =	780	Lbf	= Max Package Weight (Std Config)
X =	1.82	in	= Min Link Length
t =	0.38	in	= Link Plate thickness
A =	0.69	in^2	= Min Plate Stress Area = X*t
Ysl =	*170000*	psi	= Allowable Yield Strength
Fs =	151		= Factor of Safety = Ysl/Lts

Determine Link Plate Shear Tearout Failure			
Lsts =	1006	psi	= Calc Shear Stress = Fn/(2*w*t)
F =	780	Lbf	= Max Package Weight (Std Config)
Fn =	390	Lbf	= Load shared by 2 ends = F/2
t =	0.38	in	= Link Plate thickness
w =	0.51	in	= Distance from hole to edge
Ysl =	*170000*	psi	= Allowable Yield Strength
Ssl =	85000	psi	= Allowable Shear Strength = Ysl/2
Fs =	84		= Factor of Safety = Ssl/Lsts

Determine Link Plate Bearing Failure			
Lbfs =	1770	psi	= Calc Bearing Stress = Fn/(dp*t)
F =	780	Lbf	= Max Package Weight (Std Config)
Fn =	390	Lbf	= Load shared by 2 ends = F/2
dp =	0.58	in	= Pin diameter
t =	0.38	in	= Link Plate thickness
Ysl =	*170000*	psi	= Allowable Yield Strength
Fs =	96		= Factor of Safety = Ysl/Lbfs

Determine Link Plate Tensile Failure			
Ltfs =	426	psi	= Tensile Stress = Fn/((w-d)*t)
F =	780	Lbf	= Max Package Weight (Std Config)
Fn =	390	Lbf	= Load shared by 2 ends = F/2
d=	0.63	in	= Hole diameter
t =	0.38	in	= Link Plate thickness
w =	3.04	in	= Link Plate width
Ysl =	*170000*	psi	= Allowable Yield Strength
Fs =	399		= Factor of Safety = Ysl/Ltfs

Determine Load Pin Double Shear Failure			
Pdss =	738	psi	= Calc Tensile Stress = Fn/(A*2)
F =	780	Lbf	= Max Package Weight (Std Config)
Fn =	390	Lbf	= Load shared by 2 pins = F/2
d =	0.58	in	= Pin diameter
A =	0.264	in^2	= Pin Area = $Pi*d^2/4$
Pi =	3.142	in	= Constant
Ysp =	170000	psi	= Allowable Yield Strength
Fs =	230		= Factor of Safety = Ysp/Pdss

Determine Rib Plate 2 Shear Tearout Failure			
Rsts =	251	psi	= Calc Shear Stress = Fn/(2*L*t)
F =	780	Lbf	= Max Package Weight (Std Config)
Fn =	390	Lbf	= Load shared by 2 plates = F/2
t =	0.25	in	= Rib Plate thickness
w =	3.11	in	= Distance from hole to edge
Ysr =	*145000*	psi	= Allowable Yield Strength
Ssr =	72500	psi	= Allowable Shear Strength = Ysr/2
Fs =	289		= Factor of Safety = Ssr/Rsts

Determine Rib Plate 2 Bearing Failure			
Rbfs =	3697	psi	= Calc Bearing Stress = Fn/(dp*t)
F =	780	Lbf	= Max Package Weight (Std Config)
Fn =	390	Lbf	= Load shared by 2 plates = F/2
dp =	0.42	in	= Bolt minor diameter
t =	0.25	in	= Rib Plate thickness
Ysr =	*145000*	psi	= Allowable Yield Strength
Fs =	39		= Factor of Safety = Ysr/Rbfs

Determine Rib Plate 2 Tensile Failure			
Rtfs =	907	psi	= Tensile Stress = Fn/((w-d)*t)
F =	780	Lbf	= Max Package Weight (Std Config)
Fn =	390	Lbf	= Load shared by 2 plates = F/2
d =	0.53	in	= Hole diameter
t =	0.25	in	= Rib Plate thickness
w =	2.25	in	= Rib Plate width
Ysr =	*145000*	psi	= Allowable Yield Strength
Fs =	160		= Factor of Safety = Ysr/Rtfs

Determine Bolt 1 Tensile Failure			
B1ms=	2748	psi	=Max Tensile Stress on Bolt 1 = Fn/A
F =	780	Lbf	= Max Package Weight (Std Config)
Fn =	390	Lbf	= Load shared by 2 Bolts = F/2
A =	0.14	in^2	= Bolt Stress Area
Ysb =	*105000*	psi	= Allowable Yield Strength
Fs =	38		= Factor of Safety = Ysb/B2ms

Determine Rib Plate 3 & 4 Shear Tearout Failure			
Rsts =	424	psi	= Calc Shear Stress = Fn/(2*L*t)
F =	780	Lbf	= Max Package Weight (Std Config)
Fn =	195	Lbf	= Load shared by 4 plates = F/4
t =	0.25	in	= Rib Plate thickness
L =	0.92	in	= Distance from hole to edge
Ysr =	*145000*	psi	= Allowable Yield Strength
Ssr =	72500	psi	= Allowable Shear Strength = Ysr/2
Fs =	171		= Factor of Safety = Ssr/Rsts

Determine Rib Plates 3 & 4 Bearing Failure			
Rbfs =	1345	psi	= Calc Bearing Stress = Fn/(dp*t)
F =	780	Lbf	= Max Package Weight (Std Config)
Fn =	195	Lbf	= Load shared by 4 plates = F/4
dp =	0.58	in	= Pin diameter
t =	0.25	in	= Rib Plate thickness
Ysr =	*145000*	psi	= Allowable Yield Strength
Fs =	108		= Factor of Safety = Ysr/Rbfs

Determine Rib Plate 3 & 4 Tensile Failure			
Rtfs =	420	psi	= Tensile Stress = Fn/((w-d)*t)
F =	780	Lbf	= Max Package Weight (Std Config)
Fn =	195	Lbf	= Load shared by 4 plates = F/4
d =	0.625	in	= Hole diameter
t =	0.25	in	= Rib Plate thickness
w =	2.48	in	= Rib Plate width
Ysr =	*145000*	psi	= Allowable Yield Strength
Fs =	345		= Factor of Safety = Ysr/Rtfs

Determine Rib Plate Weld Shear Failure - Lift Direction			
Rws =	145	psi	= Tensile Stress = F/(Lw*Tw)
F =	780	Lbf	= Max Package Weight (Std Config)
hs =	0.25	in	= Weld Size
Lw =	30.48	in	= Total Weld Length - Lift Direction
Tw =	0.18	in	= Weld Throat Dimension = .7071*hs
Ysr =	*145000*	psi	= Allowable Yield Strength
Ssr =	72500	psi	= Allowable Shear Strength = Ysr/2
Fs =	501		= Factor of Safety = Ssr/Rws

Appendix C - Lifting by Single Rivnut Calculations

Determine Rivnut 1 Shear Failure			
Nss =	6306	psi	= Calc Tensile Stress = F/A
F =	700	Lbf	= Max Package Weight (Basic Config)
A =	0.11	in^2	= Nut Stress Area
dr =	0.50	in	= Nut root diameter
d =	0.63	in	= Nut Outer Diameter
Ysn =	*93694*	psi	= Allowable Yield Strength
Ssn =	46847	psi	= Allowable Shear Strength = Ysn/2
Fs =	7		= Factor of Safety = Ssn/Nss

Determine Rivnut 1 Thread Shear Strip			
Nts =	1438	psi	= Calc Shear Stress = F/(Pi*dr*(h/2))
F =	700	Lbf	= Max Package Weight (Basic Config)
dr =	0.50	in	= Nut root diameter
Pi =	3.14	in	= Constant
h =	0.62	in	= Nut engagement
Ysn =	*93694*	psi	= Allowable Yield Strength
Ssn =	46847	psi	= Allowable Shear Strength = Ysn/2
Fs =	33		= Factor of Safety = Ssn/Nts

2.12.10 Technical Report 172 Sentry Transport Package Tie-Down Analysis dated 21 Jul 2010

QSA GLOBAL

Technical Report No. 172

QSA GLOBAL, Inc.

Engineering Department

Technical Report

SENTRY Transport Package Tie-Down Analysis

Prepared by:	S. Gianni	**Date:**	15 JUL 10
Checked by:	D. Vinnard	**Date:**	16 JUL 10
Regulatory Approval:	R. Pedro	**Date:**	21 JUL 10
Engineering Approval:	Dan Kl	**Date:**	19 JUL 10

1.0 Purpose:

This report documents an analysis performed on the SENTRY transport package to the tie-down requirements of 10 CFR Part 71.45 (b).

2.0 SENTRY Transport Package Tie-Down Provisions:

The SENTRY transport package is equipped with four identical, multi-purpose Lifting/Tie-Down provisions located symmetrically around the package. The center of gravity (CG) is located approximately at the geometric center of the 780 pound maximum weight package.

The SENTRY tie-down provisions are a structural part of the package. However, they are designed to be intentionally removed without affecting the ability of the package to meet other requirements of 10 CFR Part 71.

Half of each tie-down provision is attached to the upper portion of the cylindrically shaped welded body by three high strength bolts, two on the top flat surface and one on the curved side surface of the body. The other half of the provision is attached to the body in the same manner, but with two bolts attached to the bottom and one attached to the side of the body. Refer to Figure 2.3. Materials used in construction of the tie-down provisions are shown in Table 2.1.

The upper and lower provision halves are connected together by a link plate attached to each half by a load pin. The two load pins are recruited when the package is tied-down using the link plate. It is not recommended to tie-down the package using the link plate, but this method still needs to meet the tie-down requirement of 10 CFR Part 71.45 (b).

The recommended tie-down method is to secure the package by looping high capacity straps or chains with or without a shackle through the large holes in the upper provisions and then staking the straps or chains to the vehicle down at about 45 degrees from horizontal.

There are two specific tie-down arrangements which will be analyzed separately. The first arrangement has the package oriented as shown in Figure 2.1. In this arrangement, the applied load, established by the requirements of 10 CFR Part 71, is taken by only one provision in the direction of vehicle travel. Another provision, 90 degrees from the vehicle direction, takes the load in the lateral direction. All four provisions share the load in the vertical direction.

The second arrangement has the package oriented as shown in Figure 2.2. In this arrangement, two provisions share the applied load in the direction of the vehicle. Two other provisions react to the load in the lateral direction, but one of these two provisions reacts to both the lateral and vehicle direction loads. All four provisions share the load in the vertical direction.

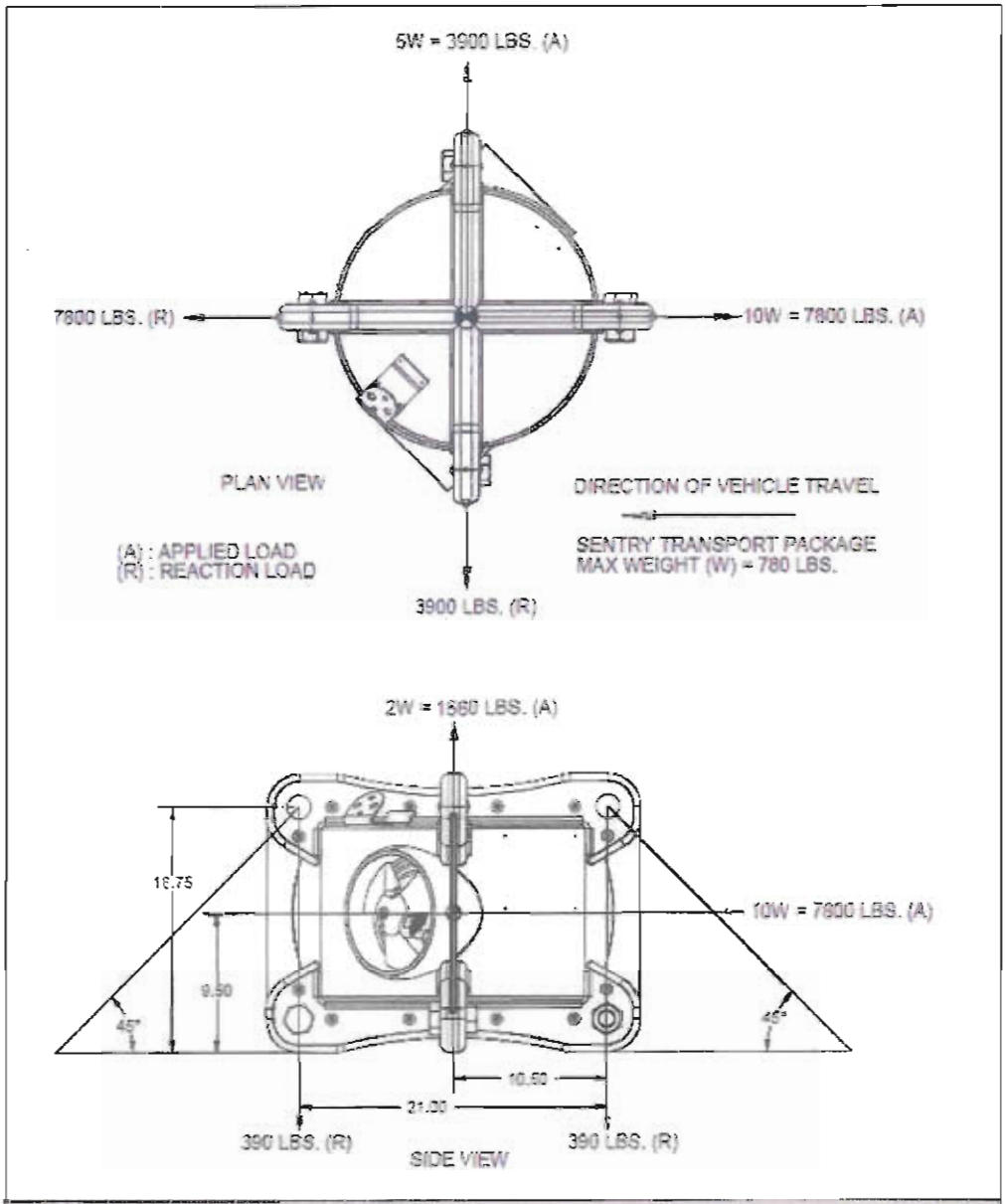

Figure 2.1. Single Provision Arrangement.

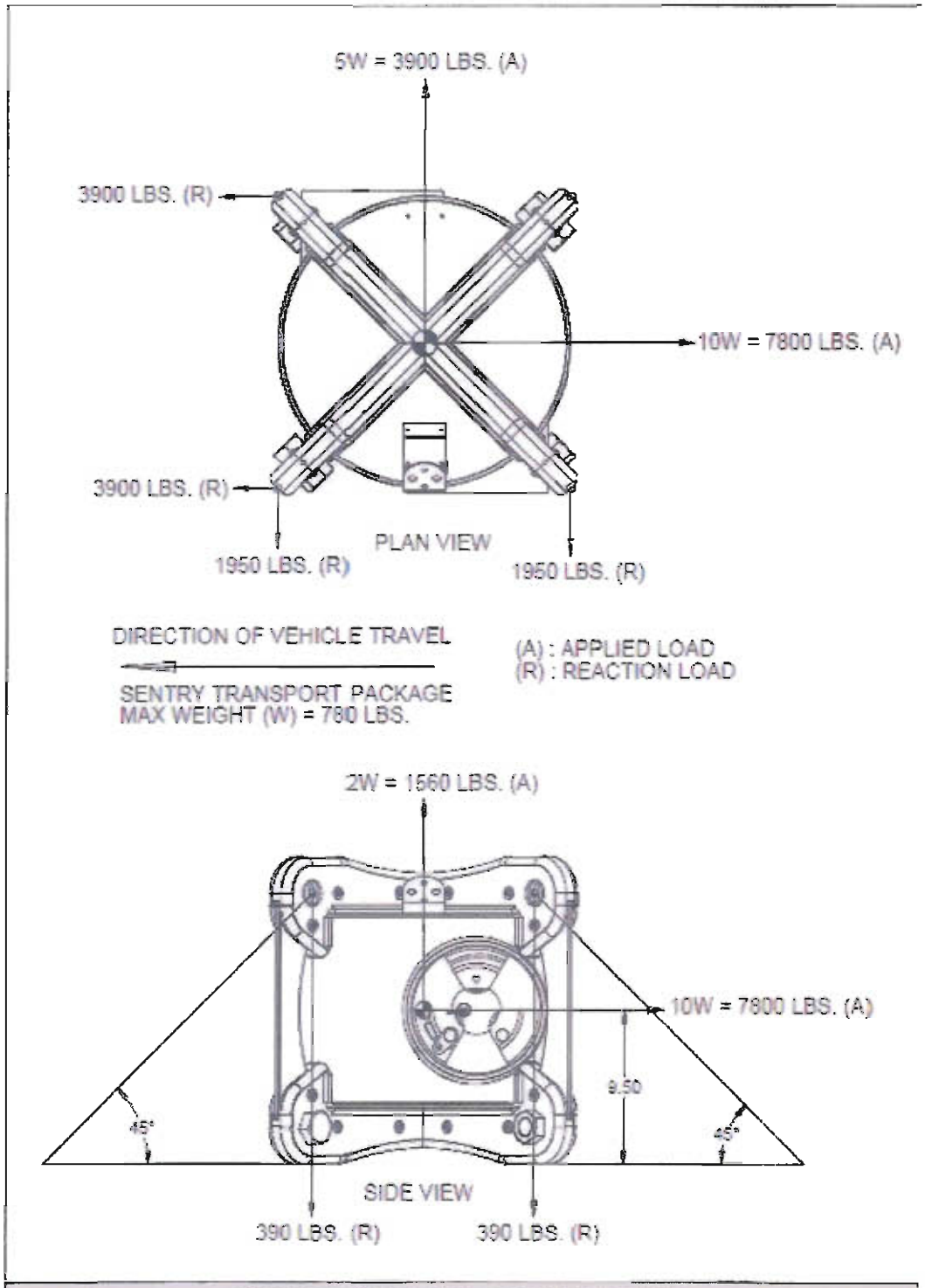

Figure 2.2. Shared Provision Arrangement.

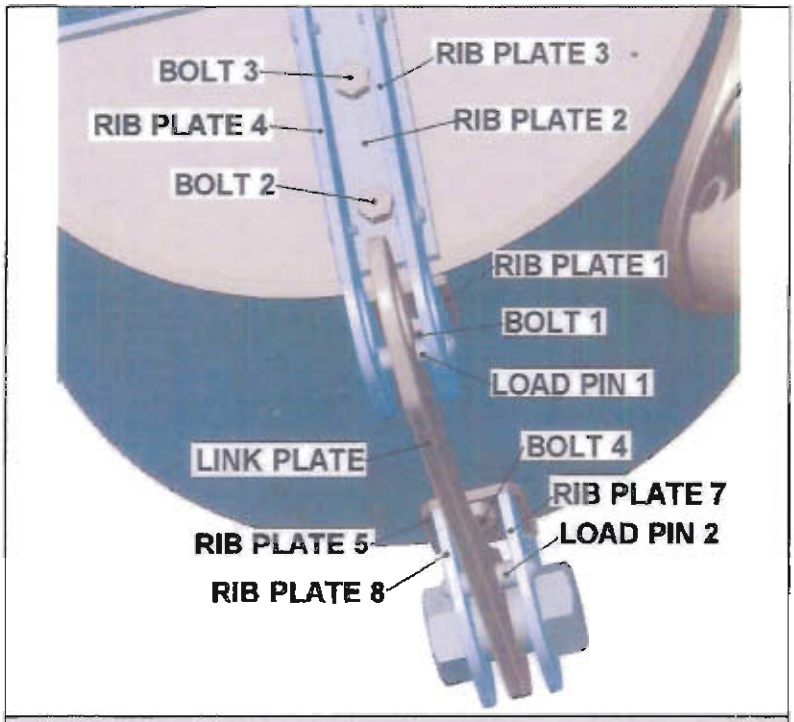

Figure 2.3. One of Four SENTRY Lifting & Tie-down Provisions

Table 2.1. Tie-Down Provision Materials List

Component Name	Material	Condition	ASTM Spec	Minimum Yield Strength, psi
Rib Plate 1 thru 8	17-4 PH STN STL	H1025	A693	145,000
Link Plate	17-4 PH STN STL	H900	A693	170,000
Bolts 1 thru 8	17-4 PH STN STL	AH	F593	105,000
Load Pin 1 & 2	17-4 PH STN STL	H900	A693	170,000
Rivnuts 1 thru 8	316 STN STL	CW	A276	93,694

The rib assembly consists of two vertical parallel plates welded to a flat horizontal plate with two mounting holes and one perpendicular plate with one mounting hole. The vertical plates are separated by a gap to allow three hex bolts to be assembled between them attaching the rib assembly to the package. See Figures 2.4 & 2.5. The bolts pass through the mounting holes and mate into Rivnuts riveted into the cylindrical welded body of the transport package.

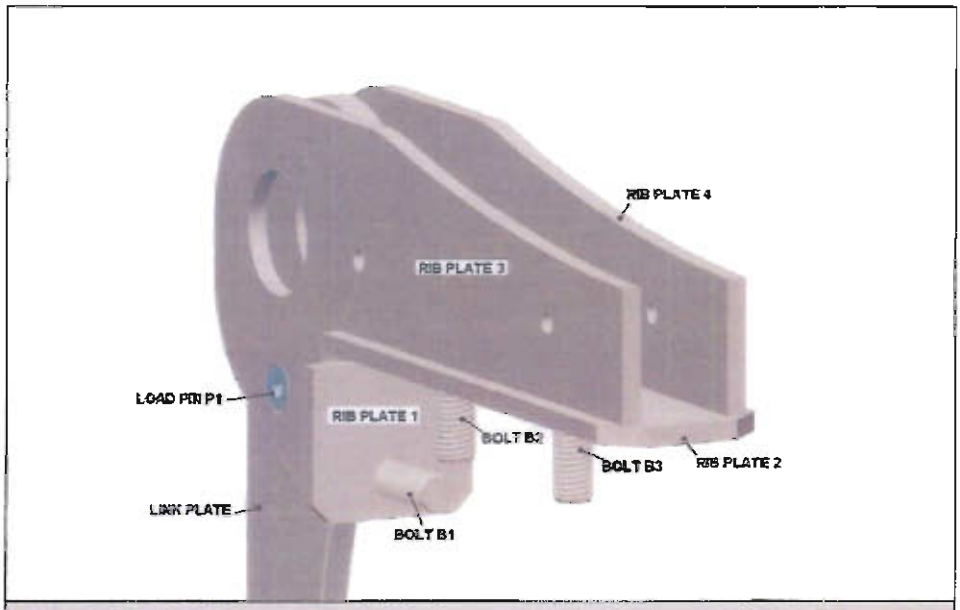

Figure 2.4. Tie-Down Rib Assembly Identification

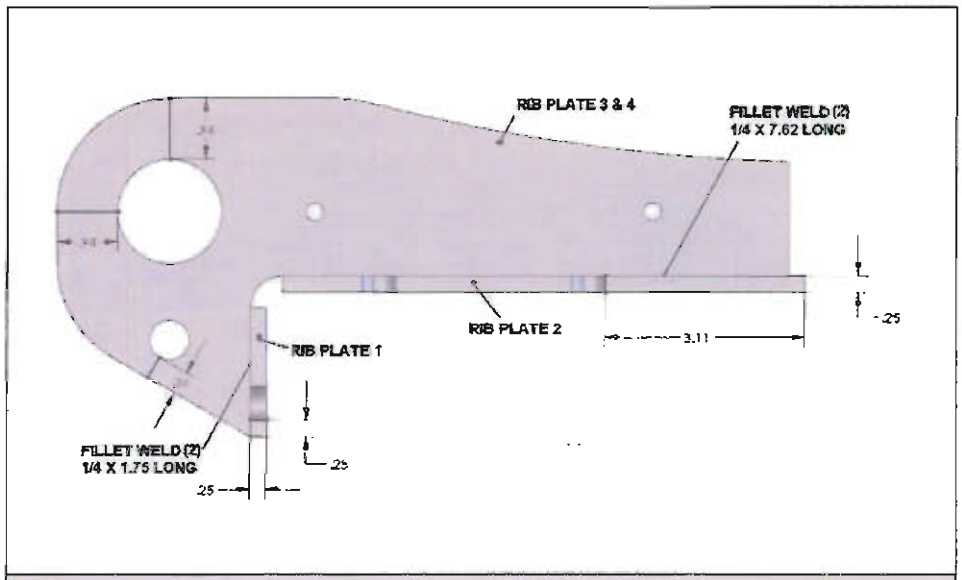

Figure 2.5. Tie-Down Rib Assembly Dimensions

3.0 Transport Tie-Down Requirement:

10 CFR Part 71.45 (b) Tie-down devices:

(1) If there is a system of tie-down devices that is a structural part of the package, the system must be capable of withstanding, **without generating stress in any material of the package in excess of its yield strength**, a static force applied to the center of gravity of the package having a **vertical component of 2 times the weight of the package with its contents, a horizontal component along the direction in which the vehicle travels of 10 times the weight of the package with its contents, and a horizontal component in the transverse direction of 5 times the weight of the package with its contents.**

(2) Any other structural part of the package that could be used to tie down the package must be capable of being rendered inoperable for tying down the package during transport, or must be designed with strength equivalent to that required for tie-down devices.

(3) Each tie-down device that is a structural part of a package must be designed so that failure of the device under excessive load would not impair the ability of the package to meet other requirements of this part.

4.0 General Assumptions:

1.0 Temperature range equal to -40 to +130 F.
2.0 No corrosion exists on the rib assembly and fastener components.
3.0 All 4 provisions are used in the tie-down analysis.

5.0 Analysis – Single Provision Tie-down by Rib Assembly:

Figure 5.1 Resolves the reaction forces in the upper tie-down provisions for a single provision arrangement with the load requirements applied per 10 CFR Part 71. Since the lateral direction loading (3900 Lbs) is less than the direction of vehicle loading (7800 Lbs), the worst case vehicle load value of 7800 lbs shall be used to determine the maximum reaction forces in the package.

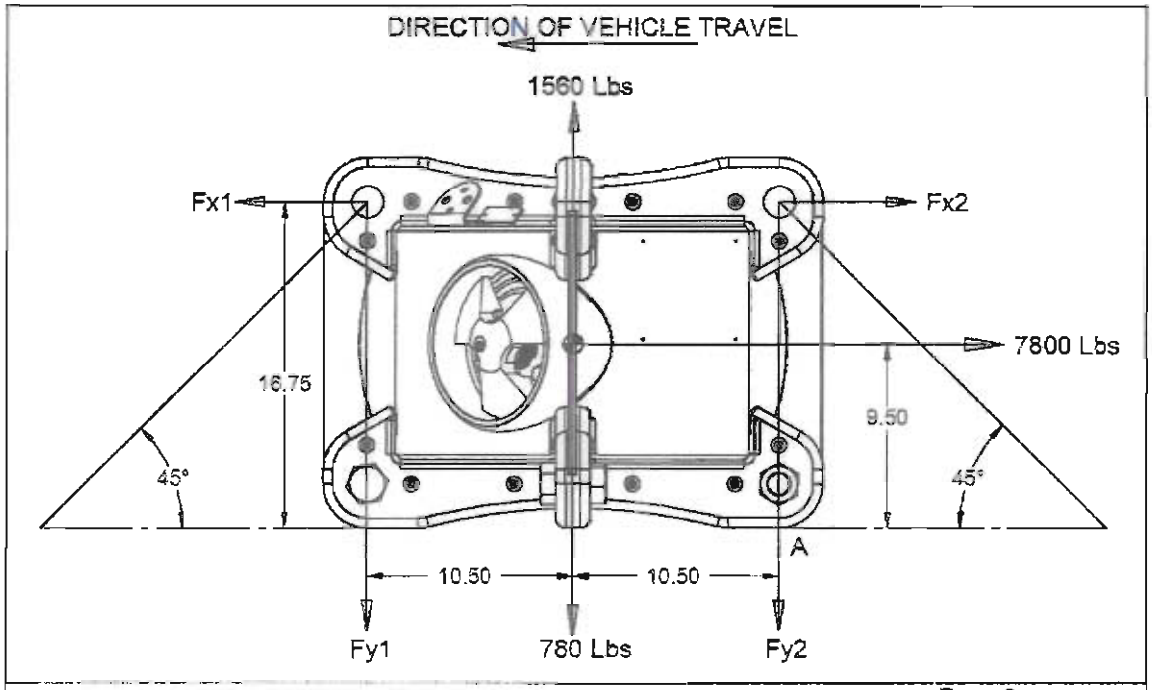

$:F_{X2} = 0$

+CCW $\Sigma M_A = 0 = 9.5(-7800) + 10.5(780) + 21(-F_{Y1}) + 16.75(F_{X1}) + 10.5(-1560)$ $:F_{Y1} = -2303$

+ UP $\Sigma F_Y = 0 = 1560 - F_{Y1} - F_{Y2} - 780$ $:F_{Y2} = +1523$

+ LEFT $\Sigma F_X = 0 = F_{X1} - 7800$ $:F_{X1} = +7800$

Figure 5.1. Single Provision Force Diagram

The recommended tie-down angle for fixing the package to the bed of the vehicle is 45°. The largest reaction force found in Figure 5.1 is 7,800 Lbs in the horizontal direction. This force shall be used to determine the maximum tension force in the cable or chain from the upper provision to the vehicle bed at 45 degrees. Figure 5.2 shows the maximum tension force to be 11,031 lbs. The 11,031 tension force shall be used for the structural analysis shown in Figure 5.3.

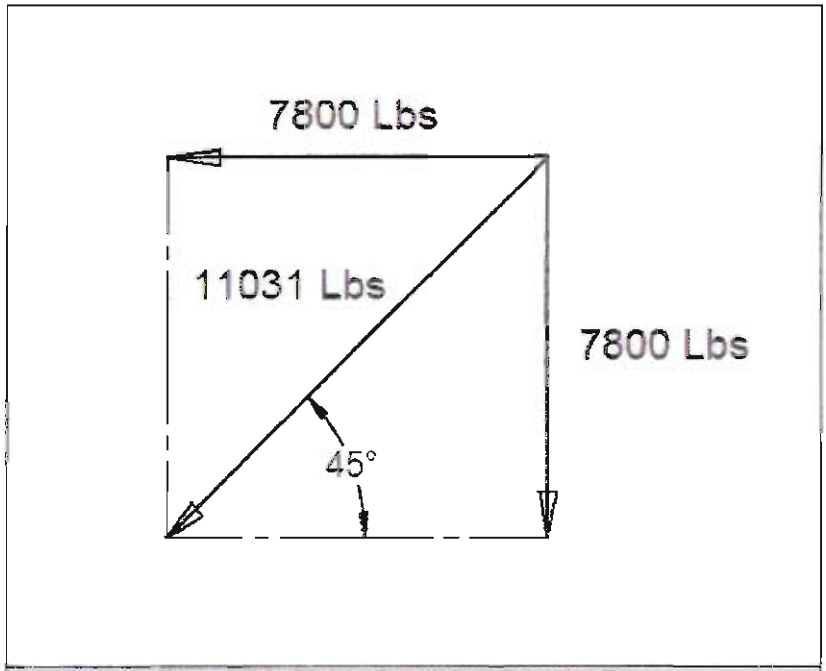

Figure 5.2. Single Provision Tension Force

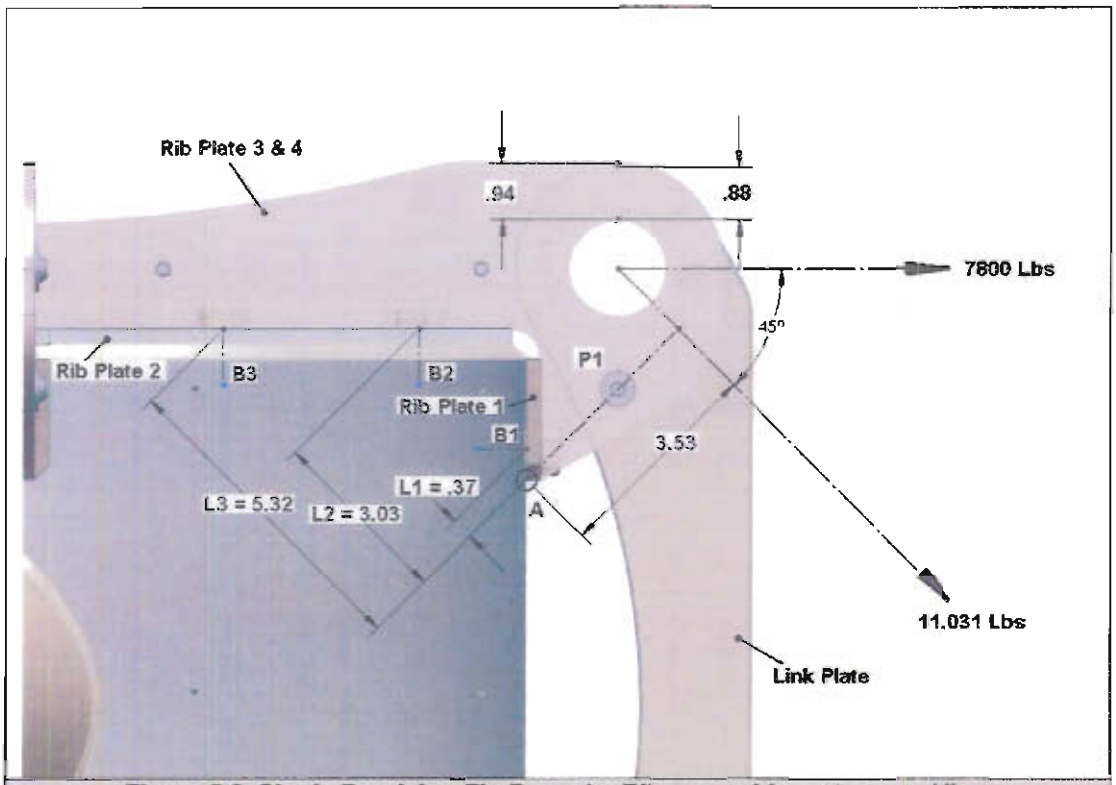

Figure 5.3. Single Provision Tie-Down by Rib Assembly – Close-up View

6.0 Results – Single Provision Tie-down by Rib Assembly:

Table 6.1 is a summary of the results of the tie-down analysis when securing the package by the rib assembly in the single provision arrangement. The table shows the calculated factor of safety for the "Bolt B3 Shear" failure is the worst case with a calculated factor of safety equal to 1. This is equal to the required factor of safety of 1. See Appendix A for the single provision tie-down by rib assembly calculations per failure mode.

Table 6.1. Summary of Single Tie-Down by Rib Analysis

Failure Mode	Calculated Factor of Safety	Required Factor of Safety	Pass/Fail
Rib Plates 3 & 4 Shear Tear-out	4	1	Pass
Rib Plate 2 Shear Tear-out	14		Pass
Rib Plate 2 Bearing Failure	2		Pass
Rib Plate 2 Tensile Failure	8		Pass
Bolt B3 Tensile Failure	2		Pass
Bolt B3 Shear Failure	1		Pass
Bolt B1 Thread Bearing Strip	4		Pass
Bolt B1 Thread Shear Strip	2		Pass
Rivnut at B1 Thread Shear Strip	2		Pass
Rib Plate Weld Shear – Horizontal	18		Pass
Rib Plate Weld Shear - Vertical	4		Pass
See Appendix A – Single Provision Tie-down by Rib Assembly Calculations			

7.0 Analysis – Single Provision Tie-Down by Link Plate:

The link plate is not recommended to be used as a tie-down provision. However, if the package is secured by the link plate, then it shall also meet the tie-down requirements of 10 CFR Part 71.45(b). Figure 7.1 shows the transport package secured by the link plate.

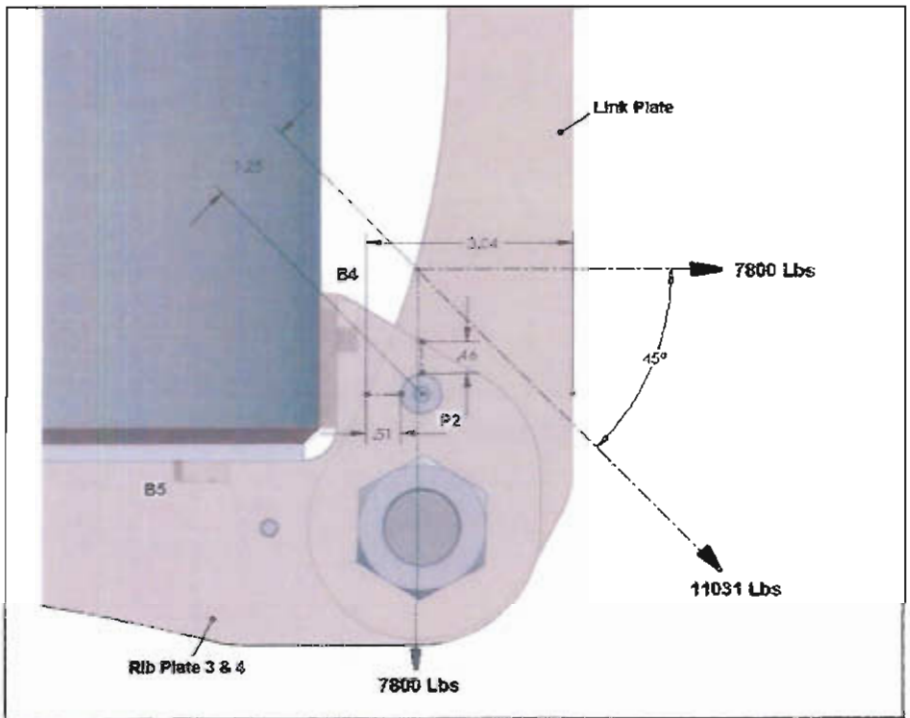

Figure 7.1. Single Provision Tie-Down by Link Plate – Close up

8.0 Results – Single Provision Tie-Down by Link Plate:

Table 8.1 is a summary of the results of the tie-down analysis when securing the package by the link plate in the single provision arrangement. The table shows the calculated factor of safety for the "Rib Plates 3 & 4 Bearing" failure mode is worst case with a calculated factor of safety equal to 3. This is 3 times the required factor of safety of 1. See Appendix B for the single provision tie-down by link plate calculations per failure mode.

Table 8.1. Summary of Single Provision Tie-Down by Link Plate Analysis

Failure Mode	Calculated Factor of Safety	Required Factor of Safety	Pass/Fail
Link Plate Tensile Failure - Midsection	15	1	Pass
Link Plate Shear Tear-out	6		Pass
Link Plate Bearing Failure	7		Pass
Link Plate Tensile Failure	28		Pass
Load Pin P1 or P2 Double Shear	12		Pass
Rib Plates 3 & 4 Shear Tear-out	**3**		Pass
Rib Plates 3 & 4 Bearing Failure	4		Pass
Rib Plates 3 & 4 Tensile Failure	15		Pass
See Appendix B – Single Provision Tie-down by Link Plate Calculations			

9.0 Analysis – Shared Provision Tie-Down by Rib Assembly:

Figure 9.1 Resolves the reaction forces in the upper tie-down provisions for the shared provision arrangement with the load requirements applied per 10 CFR Part 71. Since the lateral direction loading (3900 Lbs) is less than the direction of vehicle loading (7800 Lbs), the worst case vehicle load value of 7800 lbs shall be used to determine the maximum reaction forces in the package. The calculated force for Fx1 is half the value shown since it is shared with Fx3. Similarly, the calculated forces for Fy1 and Fy2 are half the value shown since they are shared with Fy3 and Fy4 respectively.

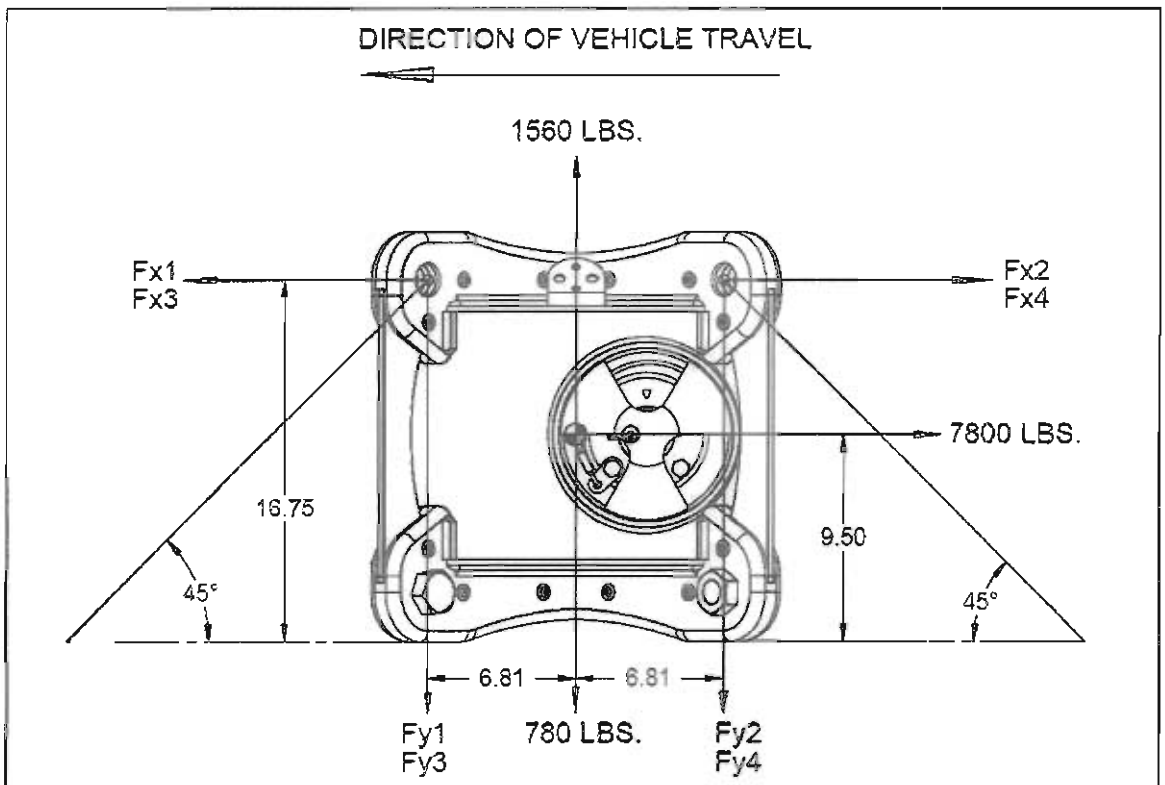

+CCW $\Sigma M_A = 0 = 9.5(-7800) + 10.5(780) + 21(-F_{Y1}) + 16.75(F_{X1}) + 10.5(-1560)$

+ UP $\Sigma F_Y = 0 = 1560 - F_{Y2} - F_{Y1} - 780$

+ LEFT $\Sigma F_X = 0 = F_{X1} - 7800$

$:F_{X2}, F_{X4} = 0$
$:F_{Y1} = -2303/2$
$:F_{Y1}, F_{Y3} = -1152$
$:F_{Y2} = +1523/2$
$:F_{Y2}, F_{Y4} = +762$
$:F_{X1} = +7800/2$
$:F_{X1}, F_{X3} = +3900$

Figure 9.1. Shared Provision Force Diagram

The recommended tie-down angle for fixing the package to the bed of the vehicle is 45°. The largest reaction force found in Figure 9.1 is 3,900 Lbs in the horizontal direction. This force shall be used to determine the maximum tension force in the cable or chain from the upper provision to the vehicle bed. Figure 9.2 shows the maximum tension force to be 5515 lbs. The 5515 tension force shall be used for the structural analysis shown in Figure 9.3.

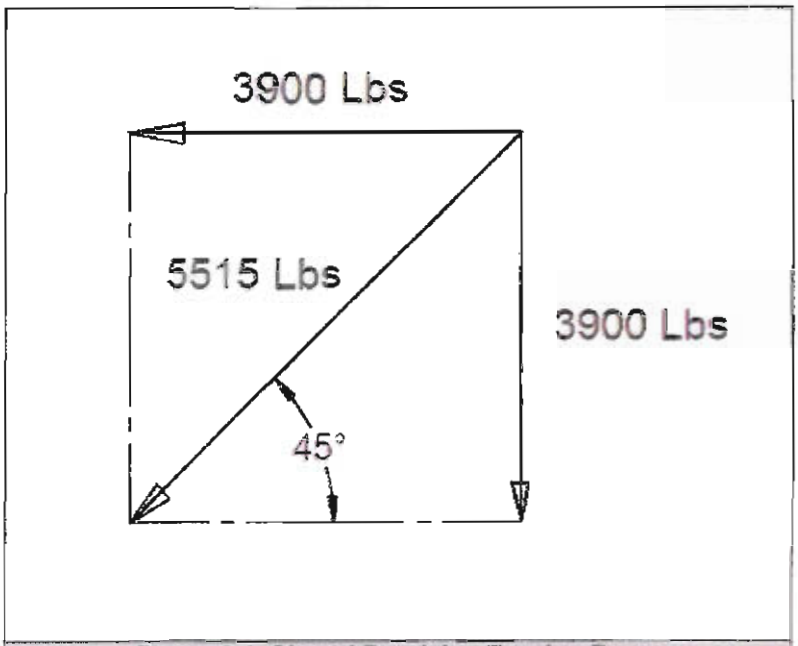

Figure 9.2. Shared Provision Tension Force

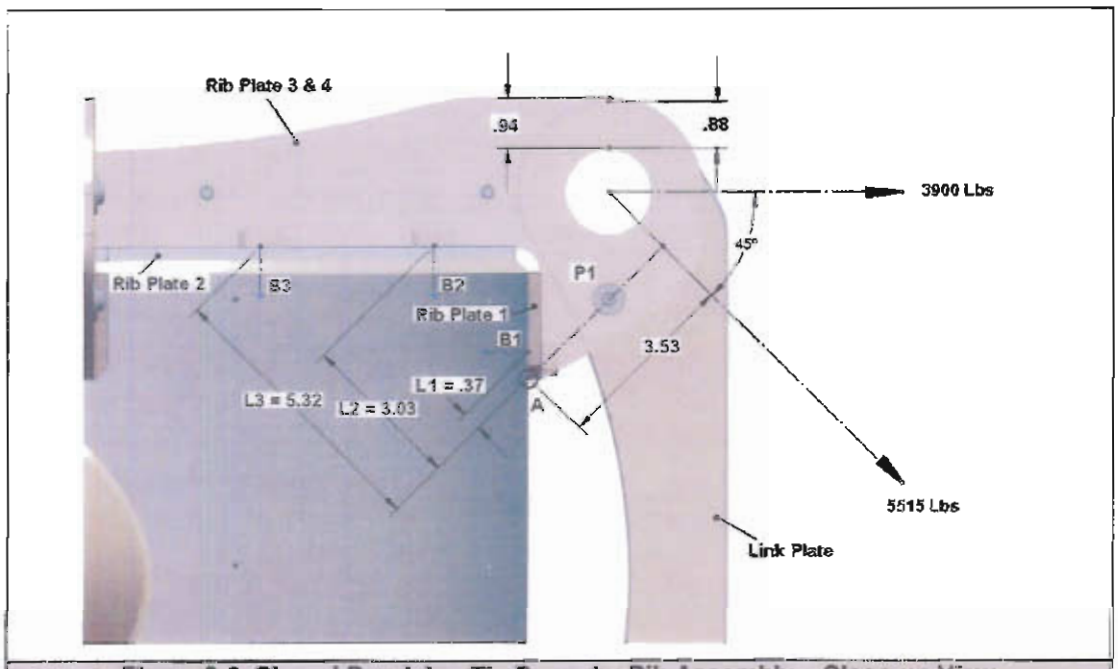

Figure 9.3. Shared Provision Tie-Down by Rib Assembly – Close-up View

10.0 Results – Shared Provision Tie-Down by Rib Assembly:

Table 10.1 is a summary of the results of the tie-down analysis when securing the package by the rib assembly in the shared provision arrangement. The table shows the calculated factor of safety for the "Bolt B3 Shear" failure is the worst case with a calculated factor of safety equal to 2. This is over 2 times the required factor of safety of 1. See Appendix C for the shared provision tie-down by rib assembly calculations per failure mode.

Table 10.1. Summary of Shared Provision Tie-Down by Rib Analysis

Failure Mode	Calculated Factor of Safety	Required Factor of Safety	Pass/Fail
Rib Plates 3 & 4 Shear Tear-out	9	1	Pass
Rib Plate 2 Shear Tear-out	29		Pass
Rib Plate 2 Bearing Failure	4		Pass
Rib Plate 2 Tensile Failure	16		Pass
Bolt B3 Tensile Failure	3		Pass
Bolt B3 Shear Failure	**2**		Pass
Bolt B1 Thread Bearing Strip	9		Pass
Bolt B1 Thread Shear Strip	4		Pass
Rivnut at B1 Thread Shear Strip	4		Pass
Rib Plate Weld Shear – Horizontal	35		Pass
Rib Plate Weld Shear - Vertical	8		Pass
See Appendix C – Shared Provision Tie-down by Rib Assembly Calculations			

11.0 Analysis – Shared Provision Tie-Down by Link Plate:

The link plate is not recommended to be used as a tie-down provision. However, if the package is secured by the link plate, then it shall also meet the tie-down requirements of 10 CFR Part 71.45(b). Figure 11.1 shows the transport package secured by the link plate.

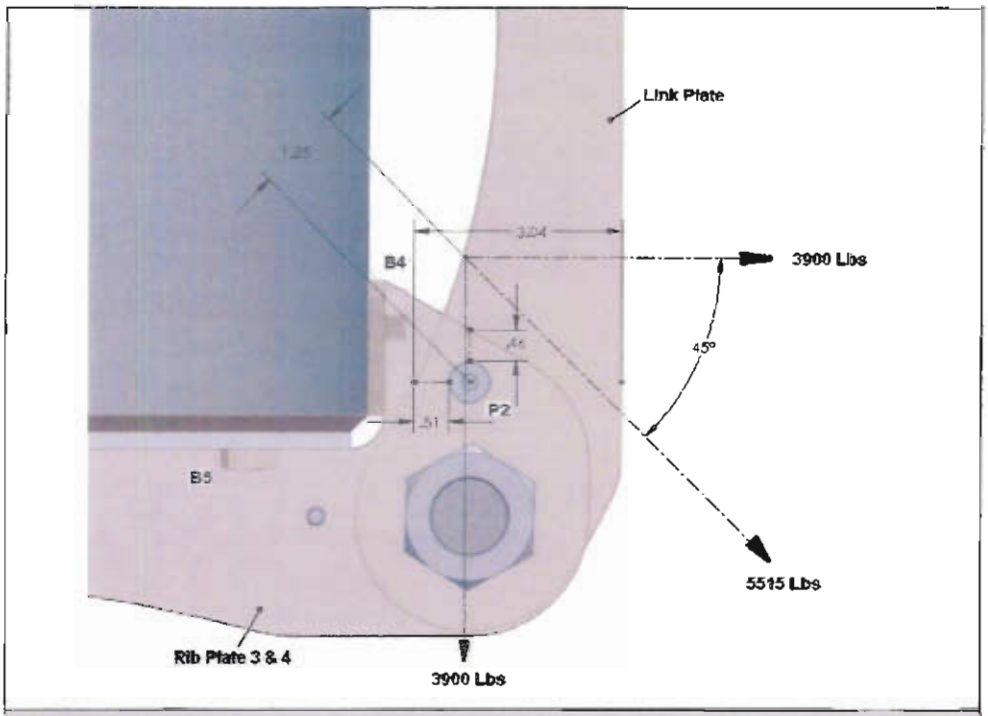

Figure 11.1. Shared Tie-Down by Link Plate – Close up

12.0 Results – Shared Provision Tie-Down by Link Plate:

Table 12.1 is a summary of the results of the tie-down analysis when securing the package by the link plate in the shared provision arrangement. The table shows the calculated factor of safety for the "Rib Plates 3 & 4 Bearing" failure mode is worst case with a calculated factor of safety equal to 6. This is 6 times the required factor of safety of 1. See Appendix D for the shared provision tie-down by link plate calculations per failure mode.

Table 12.1. Summary of Shared Provision Tie-Down by Link Plate Analysis

Failure Mode	Calculated Factor of Safety	Required Factor of Safety	Pass/Fail
Link Plate Tensile Failure - Midsection	30	1	Pass
Link Plate Shear Tear-out	12		Pass
Link Plate Bearing Failure	14		Pass
Link Plate Tensile Failure	56		Pass
Load Pin P1 or P2 Double Shear	23		Pass
Rib Plates 3 & 4 Shear Tear-out	**6**		**Pass**
Rib Plates 3 & 4 Bearing Failure	8		Pass
Rib Plates 3 & 4 Tensile Failure	30		Pass

See Appendix D – Shared Provision Tie-down by Link Plate Calculations

13.0 Final Assessment:

The SENTRY transport package tied-down by either the rib assembly or the link plate meets the tie-down requirements of 10 CFR Part 71.45 (b). No failure mode was found to be less than 1 against yielding when securing the package by either one rib assembly or link plate.

If the tie-down provision were to fail due to excessive loading, the package is designed so that the failed provision would not impair the ability of the package to meet the other requirements of 10 CFR Part 71.

Appendix A – Single Provision Tie-Down by Rib Assembly Calculations

Determine Rib Plates 3&4 Shear Tear-out Failure

Rtfs =	16596	psi	= Tensile Stress = F/(2*L*t)
F =	7800	Lbf	= Applied Load = 10 x 780 Lbs
t =	0.250	in	= Plate thickness
L =	0.940	in	= Distance from hole to plate edge
Ysr =	145000	psi	= Allowable Yield Strength
Ssr =	72500	psi	= Allowable Shear Strength = Ysr/2
Fs =	4		= Factor of Safety = Ssr/Rtfs

Determine Rib Plate 2 Shear Tear out Failure

Rsts =	5016	psi	= Calc Shear Stress = F/(2*L*t)
F =	7800	Lbf	= Applied Load = 10 x 780 Lbs
t =	0.250	in	= Wall thickness
L =	3.110	in	= Distance from hole to edge
Ysr =	145000	psi	= Allowable Yield Strength
Ssr =	72500	psi	= Allowable Shear Strength = Ysr/2
Fs =	14		= Factor of Safety = Ssr/Rsts

Determine Rib Plate 2 Bearing Failure

Rbfs =	73934	psi	= Calc Bearing Stress = F/(d*t)
F =	7800	Lbf	= Applied Load = 10 x 780 Lbs
t =	0.250	in	= Plate thickness
d =	0.422	in	= Bolt minor diameter
Ysr =	145000	psi	= Allowable Yield Strength
Fs =	2		= Factor of Safety = Ysr/Rbfs

Determine Rib Plate 2 Tensile Failure

Rtfs =	18140	psi	= Tensile Stress = F/((w-d)*t)
F =	7800	Lbf	= Applied Load = 10 x 780 Lbs
t =	0.250	in	= Plate thickness
d =	0.530	in	= Hole diameter
w =	2.250	in	= Plate width
Ysr =	145000	psi	= Allowable Yield Strength
Fs =	8		= Factor of Safety = Ysr/Rtfs

Determine Bolt B3 Tensile Failure (Combined Stress)

B3ms=	62846	psi	=Max Tensile Stress on Bolt B3 = **B3st/2 + Sqrt((B3st/2)^2 + Bss^2)**
B3st =	38806	psi	= Calc Tensile Stress = **Fp/A**
F =	11031	Lbf	= Applied Load = 7800/ (sin45°)
Fp =	5506.6	Lbf	= Proportion of load on Bolt B3 = **M*L3/SLx**
A =	0.1419	in^2	= Bolt Stress Area
M =	38939	in-Lbf	= Moment = **F*Lm**
Lm =	3.530	in	= Moment Arm at point A
SLx =	37.620	in^2	= Bolt Distances Sumed (L1^2)+(L2^2)+(L3^2)
L3 =	5.320	in	= Bolt B3 Distance to Pivot Point A (See Figure 4 for L1, L2, & L3)
Ysb =	***105000***	psi	= Allowable Yield Strength
Fs =	2		= Factor of Safety = **Ysb/B3ms**

Determine Bolt B3 Shear Failure (Combined Stress)

B3ss=	43443	psi	= Max Shear Stress on Bolt B3 = **Sqrt ((B3st/2)^2 + Bss^2)**
Bss =	38869	psi	= Calc Tensile Stress = **Fn/A**
F =	11031	Lbf	= Applied Load = 7800/ (sin45°)
Fn =	5516	Lbf	= Load shared by bolts B2 & B3 = **F/2**
A =	0.1419	in^2	= Bolt Stress Area
Ysb =	***105000***	psi	= Allowable Yield Strength
Ssb =	52500	psi	= Allowable Shear Strength = **Ysb/2**
Fs =	1		= Factor of Safety = **Ssb/B3ss**

Determine Bolt B1 Thread Bearing Failure

Btbs =	24255	psi	= Thread Bearing Stress = **F/((Pi/4)*(d^2-dr^2)*(h/p))**
F =	11031	Lbf	= Applied Load = 7800/ (sin45°)
p =	0.077	in	= Thread pitch = **1/13**
dr =	0.422	in	= Bolt root diameter
d =	0.500	in	= Bolt outer diameter
Pi =	3.142	in	= Constant
h =	0.620	in	= Nut engagement
Ysb =	***105000***	psi	= Allowable Yield Strength
Fs =	4		= Factor of Safety = **Ssb/Btbs**

Determine Bolt B1 Thread Shear Strip

Bts =	26841	psi	= Calc Shear Stress = **F/(Pi*dr*(h/2))**
F =	11031	Lbf	= Applied Load = 7800/ (sin45°)
dr =	0.422	in	= Bolt root diameter
Pi =	3.142	in	= Constant
h =	0.620	in	= Nut engagement
Ysb =	***105000***	psi	= Allowable Yield Strength
Ssb =	52500	psi	= Allowable Shear Strength = **Ysb/2**
Fs =	2		= Factor of Safety = **Ssb/Bts**

Determine Rivnut at B1 Thread Shear Strip			
Nts =	22653	psi	= Calc Shear Stress = F/(PI*dr*(h/2))
F =	11031	Lbf	= Applied Load = 7800/ (sin45°)
dr =	0.500	in	= Nut root diameter
Pi =	3.142	in	= Constant
h =	0.620	in	= Nut engagement
Ysn =	90435	psi	= Allowable Yield Strength
Ssn =	45217	psi	= Allowable Shear Strength = Ysn/2
Fs =	2		= Factor of Safety = Ssn/Nts

Determine Rib Plates 3&4 Weld Shear Failure - Horizontal			
Rws =	4095	psi	= Tensile Stress = F/(Lw*Tw)
F =	11031	Lbf	= Applied Load = 7800/ (sin45°)
hs =	0.250	in	= Weld Size
Lw =	15.240	in	= Total Weld Length - Horizontal Direction
Tw =	0.177	in	= Weld Throat Dimension = .7071*hs
Ysr =	145000	psi	= Allowable Yield Strength
Ssr =	72500	psi	= Allowable Shear Strength = Ysr/2
Fs =	18		= Factor of Safety = Ssr/Rws

Determine Rib Plates 3&4 Weld Shear Failure - Vertical			
Rws =	17829	psi	= Tensile Stress = F/(Lw*Tw)
F =	11031	Lbf	= Applied Load = 7800/ (sin45°)
hs =	0.250	in	= Weld Size
Lw =	3.500	in	= Total Weld Length - Vertical Direction
Tw =	0.177	in	= Weld Throat Dimension = .7071*hs
Ysr =	145000	psi	= Allowable Yield Strength
Ssr =	72500	psi	= Allowable Shear Strength = Ysr/2
Fs =	4		= Factor of Safety = Ssr/Rws

Appendix B – Single Provision Tie-Down by Link Plate Calculations

Determine Link Plate Tensile Failure at Midsection			
Lts =	11278	psi	= Calc Tensile Stress = F/A
F =	7800	Lbf	= Applied load
X =	1.820	in	= Min Link Length
t =	0.380	in	= Link Plate thickness
A =	0.692	in^2	= Min Plate Stress Area = X*t
Ysl =	*170000*	psi	= Allowable Yield Strength
Fs =	15		= Factor of Safety = Ysl/Lts

Determine Link Plate Shear Tearout Failure			
Lsts =	14230	psi	= Calc Shear Stress = Fn/(2*L*t)
F =	11031	Lbf	= Applied Load = 7800/(sin45°)
Fn =	5515.5	Lbf	= Load Shared by 2 ends = F/2
t =	0.380	in	= Link Plate thickness
L =	0.510	in	= Distance from hole to edge
Ysl =	*170000*	psi	= Allowable Yield Strength
Ssl =	85000	psi	= Allowable Shear Strength = Ysl/2
Fs =	6		= Factor of Safety = Ssl/Lsts

Determine Link Plate Bearing Failure			
Lbfs =	25025	psi	= Calc Bearing Stress = Fn/(dp*t)
F =	11031	Lbf	= Applied Load = 7800/(sin45°)
Fn =	5515.5	Lbf	= Load Shared by 2 ends = F/2
dp =	0.580	in	= Pin diameter
t =	0.380	in	= Link Plate thickness
Ysl =	*170000*	psi	= Allowable Yield Strength
Fs =	7		= Factor of Safety = Ysl/Lbfs

Determine Link Plate Tensile Failure			
Ltfs =	6023	psi	= Tensile Stress = Fn/((w-d)*t)
F =	11031	Lbf	= Applied Load = 7800/(sin45°)
Fn =	5515.5	Lbf	= Load Shared by 2 ends = F/2
d=	0.630	in	= Hole diameter
t =	0.380	in	= Link Plate thickness
w =	3.040	in	= Link Plate width
Ysl =	*170000*	psi	= Allowable Yield Strength
Fs =	28		= Factor of Safety = Ysl/Ltfs

Determine Load Pin #1 Double Shear Failure			
Pdss =	7381	psi	= Calc Tensile Stress = Fn/(A*2)
F =	7800	Lbf	= Applied load
Fn =	3900	Lbf	= Load Shared by 2 Pins = F/2
dp =	0.580	in	= Pin diameter
A =	0.264	in^2	= Pin Area = Pi*(dp/2)^2
Pi =	3.142	in	= Constant
Ysp =	*170000*	psi	= Allowable Yield Strength
Ssp =	85000	psi	= Allowable Shear Strength = Ysp/2
Fs =	12		= Factor of Safety = Ssp/Pdss

Determine Rib Plates 3 & 4 Shear Tearout Failure			
Rsts =	23980	psi	= Calc Shear Stress = Fn/(2*L*t)
F =	11031	Lbf	= Applied Load = 7800/(sin45°)
Fn =	5515.5	Lbf	= Load Shared by 2 plates = F/2
t =	0.250	in	= Rib Plate thickness
L =	0.460	in	= Distance from hole to edge
Ysr =	*145000*	psi	= Allowable Yield Strength
Ssr =	72500	psi	= Allowable Shear Strength = Ysr/2
Fs =	3		= Factor of Safety = Ssr/Rsts

Determine Rib Plates 3 & 4 Bearing Failure			
Rbfs =	38038	psi	= Calc Bearing Stress = Fn/(dp*t)
F =	11031	Lbf	= Applied Load = 7800/(sin45°)
Fn =	5515.5	Lbf	= Load Shared by 2 plates = F/2
dp =	0.580	in	= Pin diameter
t =	0.250	in	= Rib Plate thickness
Ysr =	*145000*	psi	= Allowable Yield Strength
Fs =	4		= Factor of Safety = Ysr/Rbfs

Determine Rib Plates 3 & 4 Tensile Failure			
Rtfs =	9698	psi	= Tensile Stress = Fn/((w-(dp+dl))*t)
F =	11031	Lbf	= Applied Load = 7800/(sin45°)
Fn =	5515.5	Lbf	= Load Shared by 2 plates = F/2
dp =	0.630	in	= Pin hole diameter
t =	0.250	in	= Rib Plate thickness
w =	4.530	in	= Rib Plate width
dl =	1.625	in	= Large hole diameter
Ysr =	*145000*	psi	= Allowable Yield Strength
Fs =	15		= Factor of Safety = Ysr/Rtfs

Appendix C – Shared Provision Tie-Down by Rib Assembly Calculations

Determine Rib Plates 3&4 Shear Tear-out Failure			
Rtfs =	8298	psi	= Tensile Stress = F/(2*L*t)
F =	3900	Lbf	= Applied Load = (10 x 780 Lbs)/2
t =	0.250	in	= Plate thickness
L =	0.940	in	= Distance from hole to plate edge
Ysr =	*145000*	psi	= Allowable Yield Strength
Ssr =	72500	psi	= Allowable Shear Strength = Ysr/2
Fs =	9		= Factor of Safety = Ssr/Rtfs

Determine Rib Plate 2 Shear Tear out Failure			
Rsts =	2508	psi	= Calc Shear Stress = F/(2*L*t)
F =	3900	Lbf	= Applied Load = (10 x 780 Lbs)/2
t =	0.250	in	= Wall thickness
L =	3.110	in	= Distance from hole to edge
Ysr =	*145000*	psi	= Allowable Yield Strength
Ssr =	72500	psi	= Allowable Shear Strength = Ysr/2
Fs =	29		= Factor of Safety = Ssr/Rsts

Determine Rib Plate 2 Bearing Failure			
Rbfs =	36967	psi	= Calc Bearing Stress = F/(d*t)
F =	3900	Lbf	= Applied Load = (10 x 780 Lbs)/2
t =	0.250	in	= Plate thickness
d =	0.422	in	= Bolt minor diameter
Ysr =	*145000*	psi	= Allowable Yield Strength
Fs =	4		= Factor of Safety = Ysr/Rbfs

Determine Rib Plate 2 Tensile Failure			
Rtfs =	9070	psi	= Tensile Stress = F/[(w-d)*t]
F =	3900	Lbf	= Applied Load = (10 x 780 Lbs)/2
t =	0.250	in	= Plate thickness
d =	0.530	in	= Hole diameter
w =	2.250	in	= Plate width
Ysr =	*145000*	psi	= Allowable Yield Strength
Fs =	16		= Factor of Safety = Ysr/Rtfs

Determine Bolt B3 Tensile Failure (Combined Stress)			
B3ms=	31420	psi	=Max Tensile Stress on Bolt B3 = B3st/2 + Sqrt((B3st/2)^2 + Bss^2)
B3st =	19401	psi	= Calc Tensile Stress = Fp/A
F =	5515	Lbf	= Applied Load = 3900/ (sin45°)
Fp =	2753.0	Lbf	= Proportion of load on Bolt B3 = M*L3/SLx
A =	0.1419	in^2	= Bolt Stress Area
M =	19468	in-Lbf	= Moment = F*Lm
Lm =	3.530	in	= Moment Arm at point A
SLx =	37.620	in^2	= Bolt Distances Sumed (L1^2)+(L2^2)+(L3^2)
L3 =	5.320	in	= Bolt B3 Distance to Pivot Point A (See Figure 4 for L1, L2, & L3)
Ysb =	*105000*	psi	= Allowable Yield Strength
Fs =	3		= Factor of Safety = Ysb/B3ms

Determine Bolt B3 Shear Failure (Combined Stress)			
B3ss=	21719	psi	= Max Shear Stress on Bolt B3 = Sqrt ((B3st/2)^2 + Bss^2)
Bss =	19433	psi	= Calc Tensile Stress = Fn/A
F =	5515	Lbf	= Applied Load = 3900/ (sin45°)
Fn =	2758	Lbf	= Load shared by bolts B2 & B3 = F/2
A =	0.1419	in^2	= Bolt Stress Area
Ysb =	*105000*	psi	= Allowable Yield Strength
Ssb =	52500	psi	= Allowable Shear Strength = Ysb/2
Fs =	2		= Factor of Safety = Ssb/B3ss

Determine Bolt B1 Thread Bearing Failure			
Btbs =	12126	psi	= Thread Bearing Stress = F/((Pi/4)*(d^2-dr^2)*(h/p))
F =	5515	Lbf	= Applied Load = 3900/ (sin45°)
p =	0.077	in	= Thread pitch = 1/13
dr =	0.422	in	= Bolt root diameter
d =	0.500	in	= Bolt outer diameter
Pi =	3.142	in	= Constant
h =	0.620	in	= Nut engagement
Ysb =	*105000*	psi	= Allowable Yield Strength
Fs =	9		= Factor of Safety = Ssb/Btbs

Determine Bolt B1 Thread Shear Strip			
Bts =	13419	psi	= Calc Shear Stress = F/(Pi*dr*(h/2))
F =	5515	Lbf	= Applied Load = 3900/ (sin45°)
dr =	0.422	in	= Bolt root diameter
Pi =	3.142	in	= Constant
h =	0.620	in	= Nut engagement
Ysb =	*105000*	psi	= Allowable Yield Strength
Ssb =	52500	psi	= Allowable Shear Strength = Ysb/2
Fs =	4		= Factor of Safety = Ssb/Bts

Determine Rivnut at B1 Thread Shear Strip			
Nts =	11326	psi	= Calc Shear Stress = F/(Pi*dr*(h/2))
F =	5515	Lbf	= Applied Load = 3900/ (sin45°)
dr =	0.500	in	= Nut root diameter
Pi =	3.142	in	= Constant
h =	0.620	in	= Nut engagement
Ysn =	90435	psi	= Allowable Yield Strength
Ssn =	45217	psi	= Allowable Shear Strength = Ysn/2
Fs =	4		= Factor of Safety = Ssn/Nts

Determine Rib Plates 3&4 Weld Shear Failure - Horizontal			
Rws =	2047	psi	= Tensile Stress = F/(Lw*Tw)
F =	5515	Lbf	= Applied Load = 3900/ (sin45°)
hs =	0.250	in	= Weld Size
Lw =	15.240	in	= Total Weld Length - Horizontal Direction
Tw =	0.177	in	= Weld Throat Dimension = .7071*hs
Ysr =	145000	psi	= Allowable Yield Strength
Ssr =	72500	psi	= Allowable Shear Strength = Ysr/2
Fs =	35		= Factor of Safety = Ssr/Rws

Determine Rib Plates 3&4 Weld Shear Failure - Vertical			
Rws =	8914	psi	= Tensile Stress = F/(Lw*Tw)
F =	5515	Lbf	= Applied Load = 3900/ (sin45°)
hs =	0.250	in	= Weld Size
Lw =	3.500	in	= Total Weld Length - Vertical Direction
Tw =	0.177	in	= Weld Throat Dimension = .7071*hs
Ysr =	145000	psi	= Allowable Yield Strength
Ssr =	72500	psi	= Allowable Shear Strength = Ysr/2
Fs =	8		= Factor of Safety = Ssr/Rws

Appendix D – Shared Provision Tie-Down by Link Plate Calculations

Determine Link Plate Tensile Failure at Midsection			
Lts =	5639	psi	= Calc Tensile Stress = F/A
F =	3900	Lbf	= Applied load
X =	1.820	in	= Min Link Length
t =	0.380	in	= Link Plate thickness
A =	0.692	in^2	= Min Plate Stress Area = X*t
Ysl =	170000	psi	= Allowable Yield Strength
Fs =	30		= Factor of Safety = Ysl/Lts

Determine Link Plate Shear Tearout Failure			
Lsts =	7114	psi	= Calc Shear Stress = Fn/(2*L*t)
F =	5515	Lbf	= Applied Load = 3900/ (sin45°)
Fn =	2757.5	Lbf	= Load Shared by 2 ends = F/2
t =	0.380	in	= Link Plate thickness
L =	0.510	in	= Distance from hole to edge
Ysl =	170000	psi	= Allowable Yield Strength
Ssl =	85000	psi	= Allowable Shear Strength = Ysl/2
Fs =	12		= Factor of Safety = Ssl/Lsts

Determine Link Plate Bearing Failure			
Lbfs =	12511	psi	= Calc Bearing Stress = Fn/(dp*t)
F =	5515	Lbf	= Applied Load = 3900/ (sin45°)
Fn =	2757.5	Lbf	= Load Shared by 2 ends = F/2
dp =	0.580	in	= Pin diameter
t =	0.380	in	= Link Plate thickness
Ysl =	170000	psi	= Allowable Yield Strength
Fs =	14		= Factor of Safety = Ysl/Lbfs

Determine Link Plate Tensile Failure			
Ltfs =	3011	psi	= Tensile Stress = Fn/((w-d)*t)
F =	5515	Lbf	= Applied Load = 3900/ (sin45°)
Fn =	2757.5	Lbf	= Load Shared by 2 ends = F/2
d=	0.630	in	= Hole diameter
t =	0.380	in	= Link Plate thickness
w =	3.040	in	= Link Plate width
Ysl =	170000	psi	= Allowable Yield Strength
Fs =	56		= Factor of Safety = Ysl/Ltfs

Determine Load Pin #1 Double Shear Failure			
Pdss =	3690	psi	= Calc Tensile Stress = Fn/(A*2)
F =	3900	Lbf	= Applied load
Fn =	1950	Lbf	= Load Shared by 2 Pins = F/2
dp =	0.580	in	= Pin diameter
A =	0.264	in^2	= Pin Area = PI*(dp/2)^2
PI =	3.142	in	= Constant
Ysp =	*170000*	psi	= Allowable Yield Strength
Ssp =	85000	psi	= Allowable Shear Strength = Ysp/2
Fs =	23		= Factor of Safety = Ssp/Pdss

Determine Rib Plates 3 & 4 Shear Tearout Failure			
Rsts =	11989	psi	= Calc Shear Stress = Fn/(2*L*t)
F =	5515	Lbf	= Applied Load = 3900/ (sin45°)
Fn =	2757.5	Lbf	= Load Shared by 2 plates = F/2
t =	0.250	in	= Rib Plate thickness
L =	0.460	in	= Distance from hole to edge
Ysr =	*145000*	psi	= Allowable Yield Strength
Ssr =	72500	psi	= Allowable Shear Strength = Ysr/2
Fs =	6		= Factor of Safety = Ssr/Rsts

Determine Rib Plates 3 & 4 Bearing Failure			
Rbfs =	19017	psi	= Calc Bearing Stress = Fn/(dp*t)
F =	5515	Lbf	= Applied Load = 3900/ (sin45°)
Fn =	2757.5	Lbf	= Load Shared by 2 plates = F/2
dp =	0.580	in	= Pin diameter
t =	0.250	in	= Rib Plate thickness
Ysr =	*145000*	psi	= Allowable Yield Strength
Fs =	8		= Factor of Safety = Ysr/Rbfs

Determine Rib Plates 3 & 4 Tensile Failure			
Rtfs =	4848	psi	= Tensile Stress = Fn/((w-(dp+dl))*t)
F =	5515	Lbf	= Applied Load = 3900/ (sin45°)
Fn =	2757.5	Lbf	= Load Shared by 2 plates = F/2
dp =	0.630	in	= Pin hole diameter
t =	0.250	in	= Rib Plate thickness
w =	4.530	in	= Rib Plate width
dl =	1.625	in	= Large hole diameter
Ysr =	*145000*	psi	= Allowable Yield Strength
Fs =	30		= Factor of Safety = Ysr/Rtfs

2.12.11 Test Plan 195 Revision 0 dated 30 June 2010

QSA GLOBAL	Document Number **F-E-1808-1** **Test Plan Cover Sheet**	Revision 0

TEST PLAN 195

SENTRY TRANSPORT PACKAGE
STANDARD CONFIGURATION
Type (B) Transport Tests

Originator	S. Gerni	Date:	25 JUNE 2010

APPROVALS			
Engineering	S. Gerni	Date:	25 JUNE 2010
Regulatory	[illegible]	Date:	30 Jun 2010
Quality Assurance	C. Rayfield	Date:	30 Jun 2010

TEST PLAN 195

SENTRY TRANSPORT PACKAGE STANDARD CONFIGURATION TYPE (B) TRANSPORT TESTS

JUNE 2010

Contents

SECTION 1 INTRODUCTION 3

SECTION 2 TRANSPORT PACKAGE DESCRIPTION 4

SECTION 3 REGULATORY COMPLIANCE 10

3.1 Normal Transport Condition Tests 10

3.2 Hypothetical Accident Condition Tests 10

3.3 Free Drop Height Adjustment 11

SECTION 4 DISCUSSION ON SYSTEM FAILURE MODES OF INTEREST 12

4.1 Pass Criteria 12

SECTION 5 ASSESSMENT OF PACKAGE CONFORMANCE 13

5.1 Hypothetical Accident Conditions (71.51 (a)(2)) 13

5.2 Transport Package Contents 13

SECTION 6 CONSTRUCTION AND CONDITION OF TEST SPECIMENS 14

6.1 Test Specimen Justification 15

6.2 Structural Materials of Test Specimen 15

6.3 Temperature Conditions 15

6.4 Pressure Conditions 15

6.5 Vibration Conditions 15

SECTION 7 MATERIAL AND EQUIPMENT LIST 16

SECTION 8 TEST PROCEDURE 17

8.1 Test Sequence 17

8.2 Test Specimen Preparation and Inspection 17

8.3 9m Free Drop Tests per 10 CFR 71.73(c) (1) 17

8.3.1 9 Meter Free Drop Test Orientation Justification 18

8.3.2 9m Free Drop Test Set-up 19

8.3.3 9m Free Drop Test Orientation 19

8.3.4 9m Free Drop Test Assessment 20

8.4 Puncture Test per 10 CFR 71.73(c) (3) 20

8.4.1 Puncture Test Orientation 20

8.4.2 Puncture Test Set-up 21

8.4.3 Puncture Test Assessment 22

8.5 Post Test Inspection 22

8.6 Thermal Test Assessment per 10 CFR 71.73(c) (4) 23

8.7 Test Specimen Storage 23

SECTION 9 WORKSHEETS 24

Test Plan No. 195

Section 1 Introduction

A review of the results of Test plan 180 report #2 raised the need to perform another drop test sequence on a test specimen built to the special configuration of the SENTRY transport package. The special configuration is identical to the standard configuration but without the plastic inserts assembled into the handling rib assemblies.

The additional testing involves dropping a test specimen in the orientation with the rear plate access port faces down towards the drop pad. This orientation does not provide much impact absorption with the handling ribs attached. The drop test height shall be adjusted higher than 10 CFR Part 71 drop height requirements to give the test specimen the impact energy equivalent to a SENTRY transport package built to the maximum specified weight of 780 Lbs. This test specimen built to the special configuration in the specified orientation at the adjusted height is the worst case test condition for the SENTRY transport package built to the standard configuration.

This plan will test the SENTRY transport package in the special standard configuration to the test requirements for Type B(U)-96 packages as described in the Code of Federal Regulations, 10 CFR Part 71, revised as of March 31, 1999. The test plan also covers the criteria stated in the IAEA Regulations for the Safe Transport of Radioactive Material, Safety Series No.6 1985 Edition (As Amended 1990).

This document describes the test specimen, testing equipment, testing scenario, justifies the package orientation and provides test worksheets to record key steps in the testing sequence.

Roles and Responsibilities

- **Engineering** executes the tests according to the test plan and summarizes the test results.
- **Regulatory Affairs** monitors the tests and reviews test reports for compliance with regulatory requirements.
- **Quality Assurance** oversees test execution and test report generation to assure compliance with the QSA Global Quality Assurance Program.
- **Engineering, Regulatory Affairs** and **Quality Assurance** are jointly responsible for assessing test and specimen conditions relative to 10 CFR 71 and IAEA TS-R-1 1996.

Section 2 Transport Package Description

The SENTRY transport package is a family of packages, consisting of 2 different model numbers. Model 860 refers to the SENTRY projector series and Model 867 refers to the SENTRY source changer.

The Model 860 SENTRY Projector series is further broken down into 2 projectors types defined by their rated capacity for cobalt-60, the SENTRY 330 and SENTRY 110 projectors. Each projector type is available in either a standard or basic transport package configuration. The standard configuration will most likely be the most commonly used version of the transport package. The basic configuration is the same as the standard configuration but without the array of removable handling rib assemblies.

The Model 867 SENTRY source changer is rated at 330 curies of cobalt-60. Similar to the projectors, the source changer is available in both a standard and basic configuration.

Figure 2.1.is a schematic overview of the SENTRY transport package configuration tree.

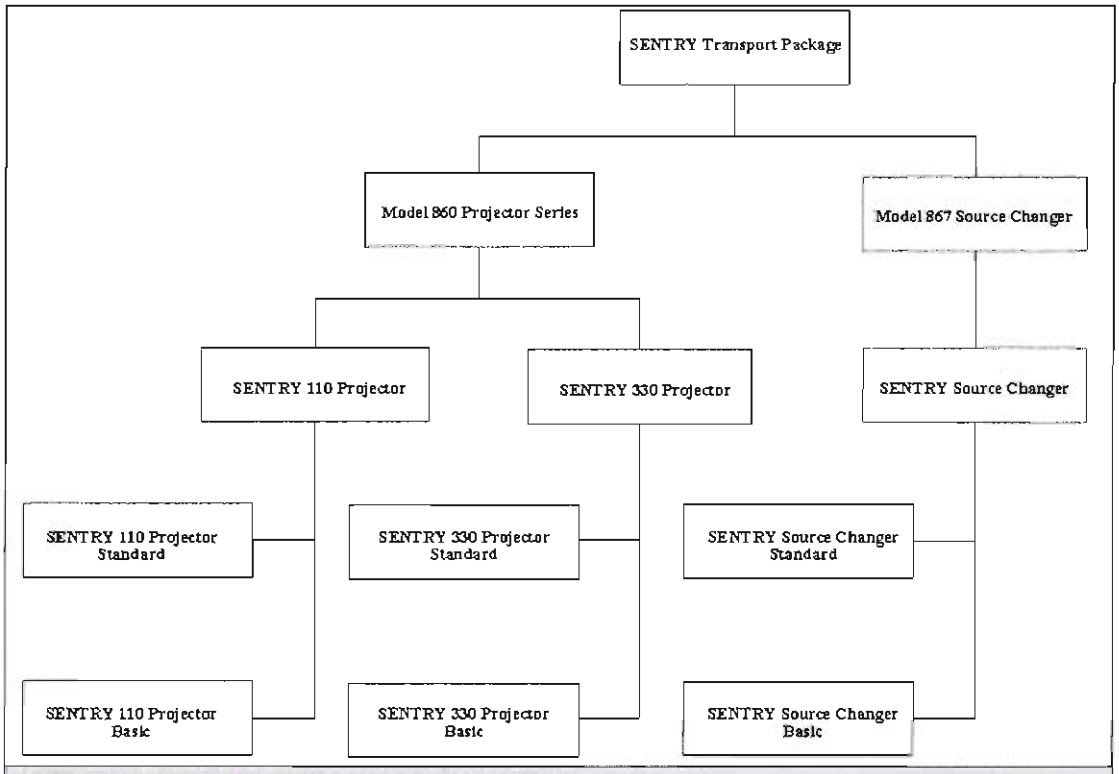

Figure 2.1. SENTRY Transport Package Configuration Tree.

Table 2.1 is a reference table comparing the various SENTRY transport package configurations.

Table 2.1. SENTRY Transport Package Configurations.

Configuration	Handling Ribs	Active Source Wire Assembly	Active Source Capsule	Max. Package Weight (Lbs.)	Refer to Figure	Source Capacity (Curies of Co60)
** SENTRY 330 Projector – Standard	Yes	42465-9 & 42465-10	60011 & 60012	780	2.2	330
SENTRY 330 Projector – Basic	No	42465-9 & 42465-10	60011 & 60012	700	2.3	330
SENTRY 110 Projector – Standard	Yes	42465-8	60011	580	2.2	110
SENTRY 110 Projector – Basic	No	42465-8	60011	500	2.3	110
SENTRY Source Changer – Standard	Yes	42465-8, 42465-9 & 42465-10	60011 & 60012	780	2.2	330
SENTRY Source Changer - Basic	No	42465-8, 42465-9 & 42465-10	60011 & 60012	700	2.3	330

** Indicates configuration but without plastic inserts to be tested in this test plan.

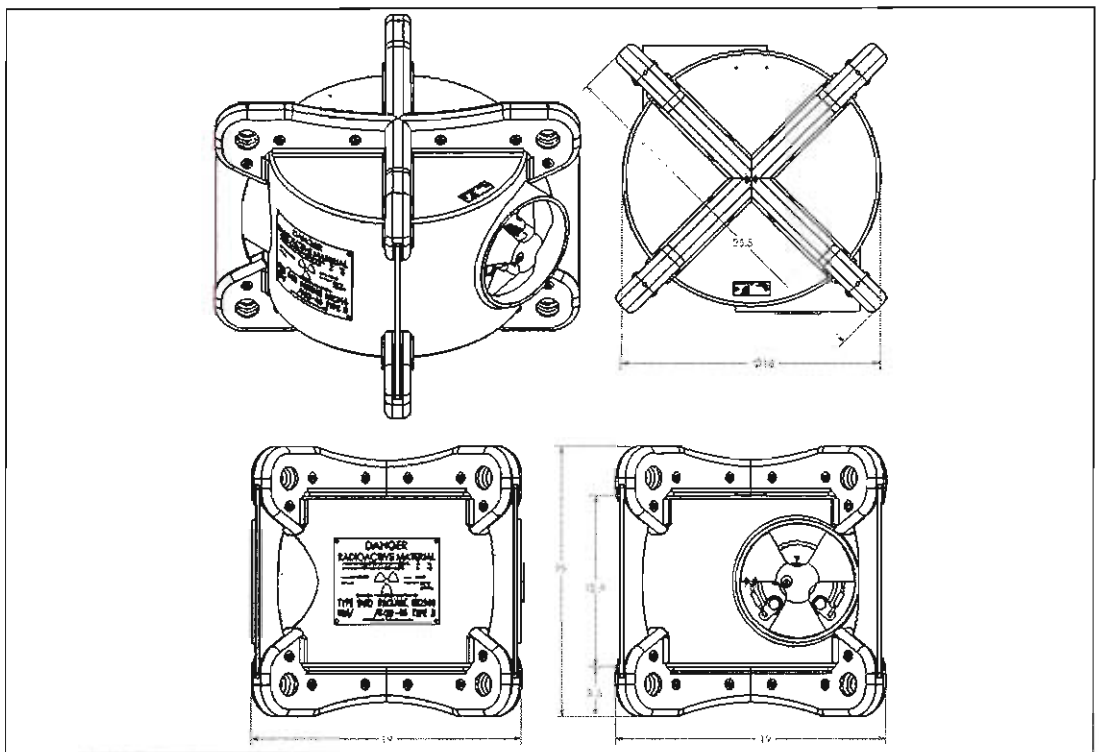

Figure 2.2. SENTRY Transport Package Standard Configuration.

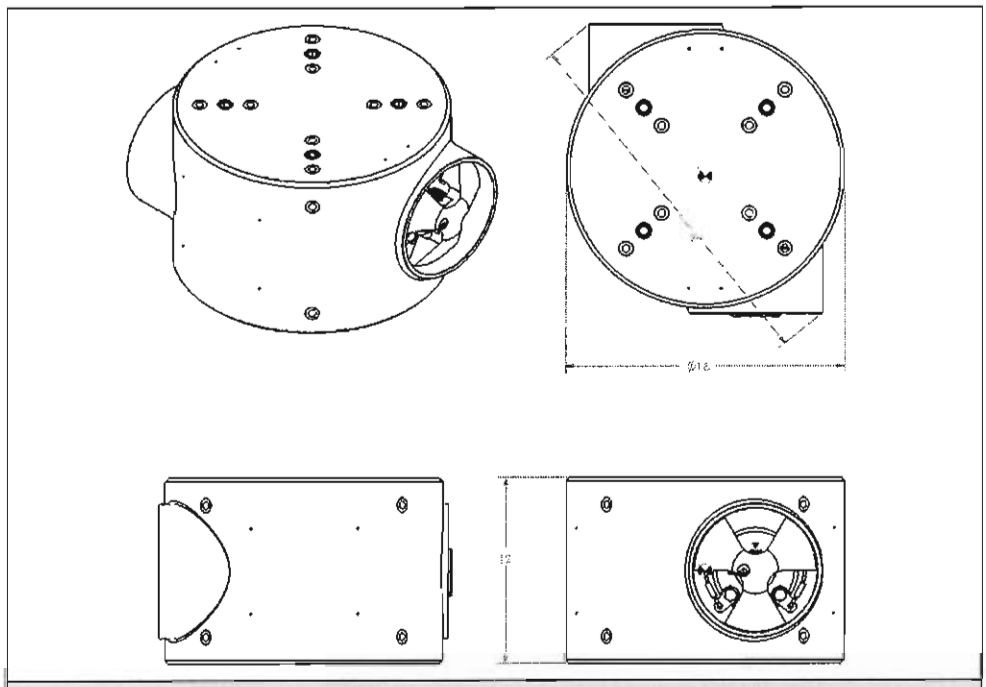

Figure 2.3. SENTRY Transport Package Basic Configuration.

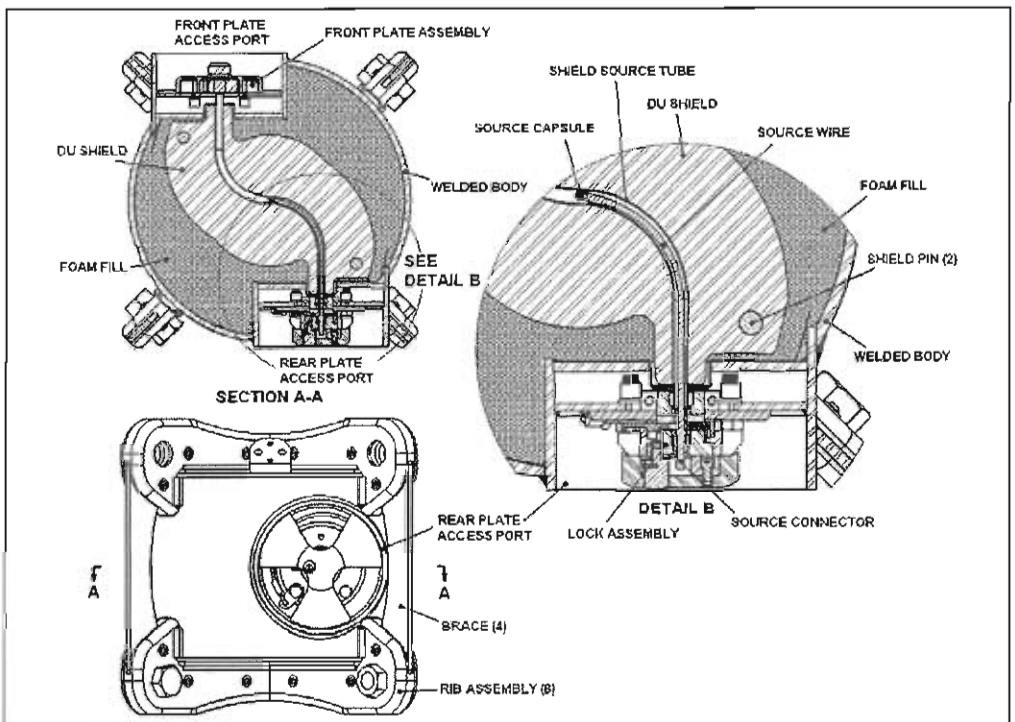

Figure 2.4. SENTRY Transport Package Common Components

All configurations include a depleted uranium shield completely encased and fully supported in a cylindrically shaped, stainless steel, welded body (See Figure 2.4). The welded body, also called the shell, includes two, tube shaped, access ports integrally welded on opposite sides of the main body. A twin set of shield mounting bars, one on each side of the shield, are welded to the back plate of each access port tube. Heavy duty,

titanium, shield pins pass through the shield and into both shield mounting bars. This creates two positive shield attachment points to the welded body.

The shield source tube ends are also inserted into holes in each of the access port back plates. In addition to this, the shield is captured and centrally located between the top and bottom endplates. This combination of shield securing features provide for a robust shield support system within the welded body.

The inner cavity of the welded body, around the shield, is filled with polyurethane foam. The foam prevents contamination to and from the depleted uranium shield. Previous thermal tests have shown charred polyurethane foam will inhibit the flow of oxygen to the shield and prevent oxidation from occurring during a fire as long as the foam remains confined. This is shown on QSA Global test plan results number 70.

Previous tests have also shown the charred foam will not support the shield at temperatures at or above 800°C. Therefore, the SENTRY relies primarily on the shield support system inside the welded body to hold the shield in place during the thermal test where temperatures reach 800°C.

A titanium source tube, cast into the center of the shield, provides a conduit for the source wire assembly within the shield. The source tube of the SENTRY projector allows the source assembly to pass through the shield. However, the source tube of the SENTRY source changer has a stop to prevent the source assembly from passing through the center of the container. The source capsule is located close to the most shielded location at the center of the shield in all transport configurations.

The two opposing access ports provide a protected mounting space for both the rear-plate and front-plate assemblies. The front-plate assembly is used only on the projector configurations. The source changer configuration uses a rear-plate assembly in each access port.

In all configurations, the rear-plate assembly locks, secures, and locates the source wire assembly to an ideally shielded position within the package. A redundant fastening system attaches the rear-plate to the welded body. The primary attachment method of the fastening system is achieved by four, high strength, stainless steel, hex head bolts, BLT015, threaded into stainless steel rivet nuts assembled into the welded body. The rivet nuts facilitate repair in the event the threads are damaged in the future. An alternate configuration consists of using a threaded stainless steel ring with multiple tapped holes instead of using the rivet nuts. The ring can be rotated to use a different set of tapped holes in the event the initial set becomes damaged.

The secondary method of attachment is by a single stainless steel tamperproof button head screw. This screw reduces and limits unauthorized access to the source. The tertiary method of attachment is provided by two, stainless steel, retaining pins (projectors) or set screws (changer) assembled to the rear-plate. The pins or set screws enter the welded body through a horizontal slot in the mounting plate. The rear-plate is rotated 90 degrees to prevent the pins or set screws from passing back out through the mounting plate where no slot exists. This keeps the rear-plate from separating from the welded body in the event the primary and secondary attachment methods are compromised. The recessed location of the rear-plate mounting surface within the access port tube provides additional restraint preventing rotation and translation on the rear-plate. This effect requires only one screw or bolt to keep the source secured to the shield in the welded body.

There are three rear-plate assembly designs used in the SENTRY transport package. All three designs use the same basic rear-plate assembly concept but the projector and source changer configurations differ in the way the source wire assembly is locked to the package.

Except for the SENTRY 110 projector rear-plate being 0.31 inches thinner than the SENTRY 330 rear-plate, both projector configurations use the same rear-plate assembly. The difference in rear-plate thickness is to allow for the difference in length of the dedicated source wire assemblies used in each projector.

All SENTRY configurations use a selector ring to change and indicate the safety state of the package. When the selector ring is rotated to the "LOCK" position, it securely holds the source wire assembly in place for transport. The selector ring retainer allows the selector ring to rotate and keeps it attached to the rear-plate

assembly. The selector ring retainer also provides the housing for the critical spring-loaded locking components and is attached to the rear-plate by 4 stainless steel socket head cap screws.

The projector configurations use the round ball feature of the connector to capture the source wire assembly between two spring-loaded locking components, the sleeve and lock slide, of the rear-plate assembly to secure the source wire assembly to the package.

The source changer configuration uses two spring-loaded fork shaped locking pins to hold the helical wrap feature of the Teleflex wire or cable to secure the source wire assembly to the package. The source changer cannot use the same source wire securing mechanism as the projectors because of two reasons.

1. The source changer accommodates two different length source wire assemblies.
2. The source changer requires the source to enter and exit from the same rear-plate assembly.

A sealed, special form, stainless steel, source capsule contains the radioactive contents of the package. The source capsule and a stainless steel connector are independently swaged to each end of a flexible stainless steel wire or cable to form the source wire assembly.

A dust cover over the source wire connector prevents access to the source assembly until a keyed plunger lock is actuated and the cover removed. This dust cover is in place during transport.

The front-plate assembly of the projector does not hold the source assembly but instead blocks access into or out of the source tube cavity from the end opposite the rear-plate access port.

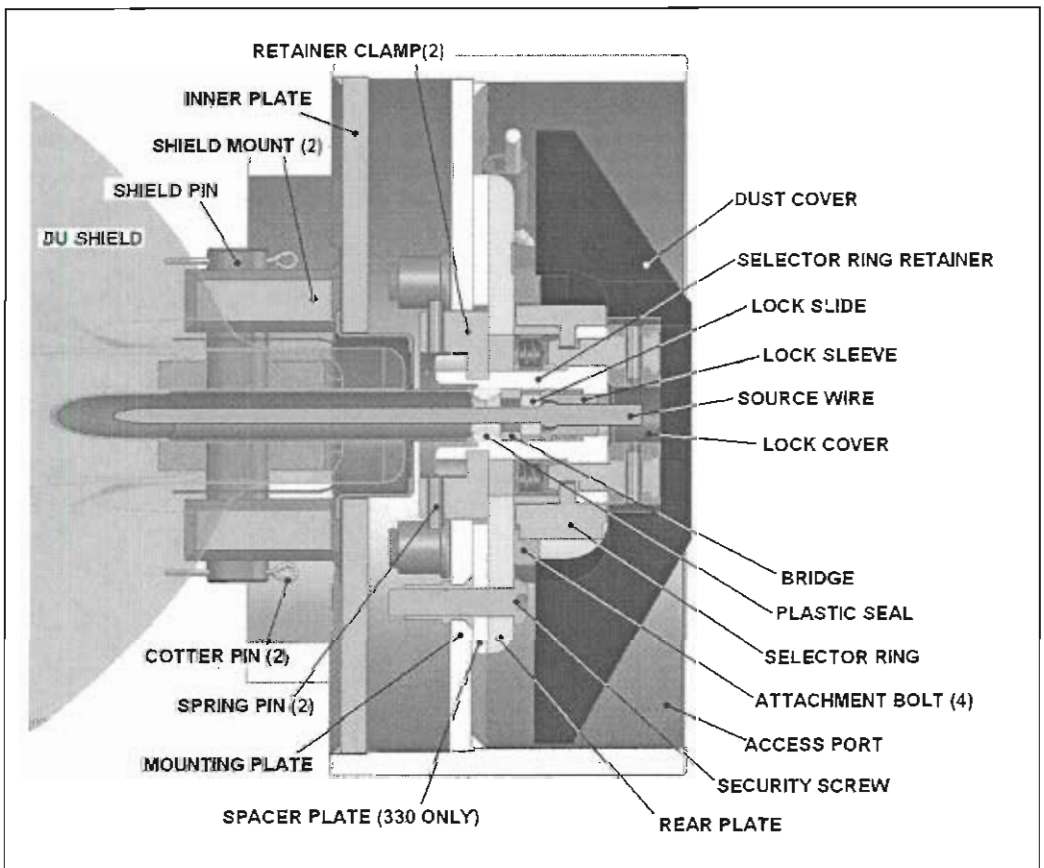

Figure 2.5. SENTRY Projector(s) Rear-plate Assembly with source wire secured

Figure 2.5 shows the rear-plate assembly end of the projector version of the SENTRY transport package. The SENTRY 110 rear-plate is thinner than the SENTRY 330 rear-plate by 0.31 inches to account for the

difference in source wire lengths. Except for the shield and the rear-plate thickness, all other components are identical in both projectors.

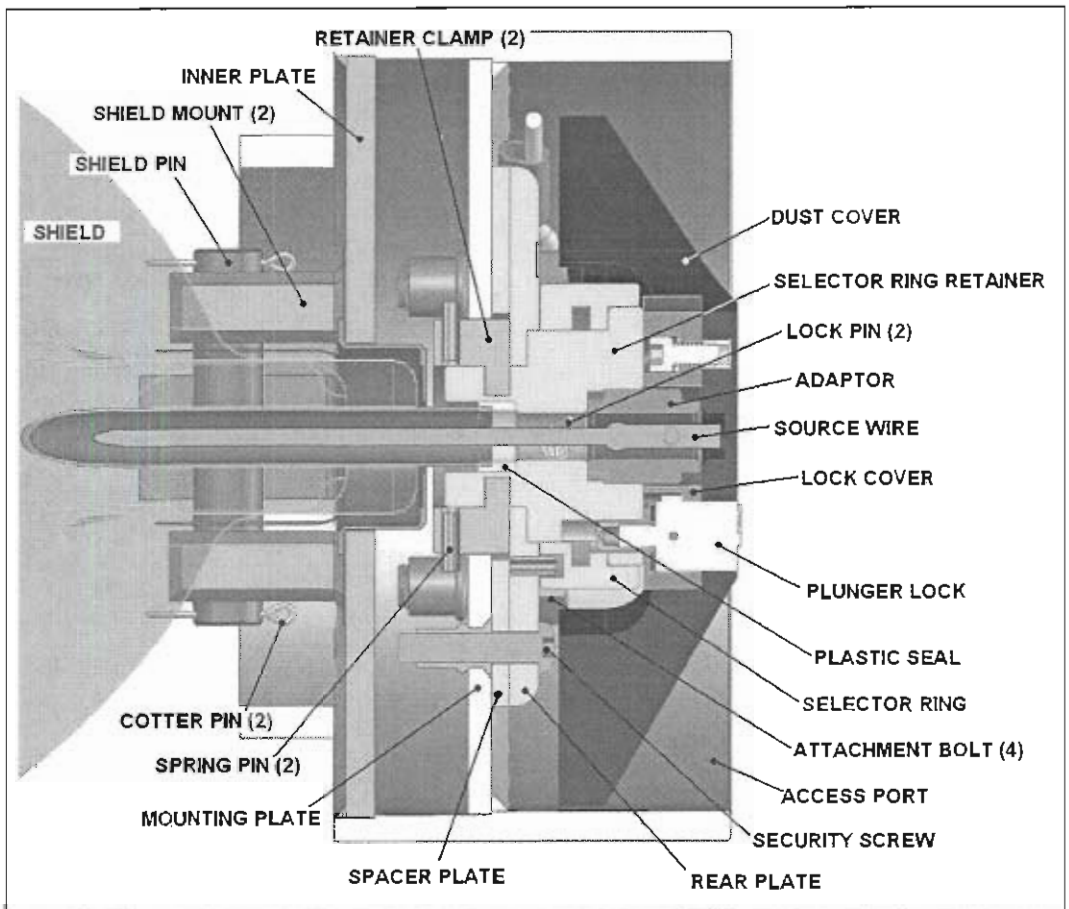

Figure 2.6. SENTRY Source Changer Rear-plate Assembly with source wire secured

Figure 2.6 shows the rear-plate assembly end of the source changer version of the SENTRY transport package. The source changer rear-plate is essentially the same thickness as the SENTRY 330 projector rear-plate. Many of the source changer rear-plate components differ from the projector version, but the rear-plate fastening system is identical.

Section 3 Regulatory Compliance

The main purpose of this test plan is to demonstrate that the SENTRY projector/transport package complies with the Type B(U)-96 transport package test requirements of 10 CFR 71 and IAEA TS-R-1 1996.

3.1 Normal Transport Condition Tests

The **water spray preconditioning** (10 CFR 71.71 (c) (6)), the **compression test** (10 CFR 71.71 (c) (9)), and the **penetration test** (10 CFR 71.71 (c) (10)) were all addressed under test plan 180 report #1.

The **1.2 meter free drop test** per 10 CFR 71.71 (c) (7) was addressed under test plan 180 report #1 & 2. A test specimen dropped in the same orientation as planned for this test was dropped from 32.2 feet twice without a change in the safety performance of the package. All components important to safety remained intact and functional after the first drop. The radiation dose levels were below 200-mR/hr on the surface of the package after all tests. Therefore, there is no need to perform the 1.2 meter again before the 9 meter drop test.

3.2 Hypothetical Accident Condition Tests

The **crush test** (10 CFR 71.73 (c) (2)) and the **immersion test** (10 CFR 71.73 (c) (6)) were both addressed under test plan 180 report #1.

The SENTRY transport package shall be subjected to the **9 meter free drop test** (10 CFR 71.73 (c) (1), and then the **puncture test** (10 CFR 71.73 (c) (3).

The **thermal test** (10 CFR 71.73 (c) (4)) will most likely be assessed and not performed. The assessment will be based on the examination of the damage to the test specimen after the puncture test. Experience from thermal testing the Model 660 & Model 680 transport packages has shown the shield will oxidize and diminish its ability to protect only when the adjacent foam fill is allowed to combust and then fall away from the shield. Charred foam seems to provide enough thermal insulation to prevent the shield from oxidizing as long as the charred foam remains in place. Any damage producing an unintentional opening in the shell or welded body would need to be assessed to determine whether the transport package would pass or fail the thermal test.

3.3 Free Drop Height Adjustment

Assume air friction is negligible for an object dropped from 30 feet. The kinetic energy of the dropped package just before impact is equal to the total potential energy just before the package began to drop. The potential energy (PE) is simply equal to the weight (W) of the package multiplied by the height (H) of the package just before it was dropped.

$$PE = W \times H$$

In this equation, the weight (W) is directly proportional to the height (H). Therefore, a lighter package can be dropped from a higher drop height in order to produce equivalent impact energy for a heavier package dropped at a lower drop height. The following example calculates the adjusted 30-foot free drop height for a SENTRY 330 Standard test specimen built lighter than the maximum allowable package weight for this configuration.

Drop #1: The maximum package weight is 780 pounds and the free drop height requirement is 30 feet.

$$PE\ (1) = 780 \times 30 = 23400 \text{ Lbs-Ft}$$

Drop #2: Say, the actual test specimen weight is 734 pounds and adjusted free drop height is unknown, H.

$$PE\ (2) = PE\ (1) = 23400 \text{ Lbs-Ft} = 743 \text{ Lbs} \times H \text{ feet}$$

$$H = 31.5 \text{ feet} = 31 \text{ feet } 6 \text{ inches}$$

The actual adjusted drop heights for the 30-foot free drop and puncture drop tests is to be determined once the test specimen is weighed and just before the test.

The adjusted heights will provide impact energy equal to or greater than the maximum transport package weight if dropped at the 10 CFR Part 71 specified drop heights (30 feet free drop and 1 meter puncture).

Section 4 Discussion on System Failure Modes of Interest

The tests of this plan attempt to cause failure or malfunction to critical safety components and/or systems needed to protect against elevated dose levels during and after a hypothetical accident as described in 10CFR part 71. The critical safety components and/or systems of the SENTRY transport package are the shield, the rear plate assembly, the rear plate attachment hardware, and the location of the source assembly within the shield.

Possible failure modes of interest for this test are as follows:

- Fracture of the depleted uranium (DU) shield causing failure to provide sufficient shielding.
- Damage to the welded body enough to shift in the shield location relative to the shielded source assembly causing unacceptable dose levels around the package.
- Damage to the rear plate lock assembly enough to remove the source assembly from its shielded location
- Failure of the rear plate attachment hardware to keep the rear plate lock assembly with source assembly attached to the package.

4.1 Pass Criteria

To confirm the package meets the normal conditions of transport requirements, the test specimen shall be considered passing the test if it does not show any signs of loss or dispersal of its radioactive or simulated contents and also does not show a substantial reduction in the effectiveness of the packaging.

To confirm the package meets the hypothetical accident condition requirements, the test specimen shall be considered passing the test if it also does not show an increase in external surface radiation levels above 1-R/hr at 1 meter (40 inches) from the packages external surface after the hypothetical accident condition tests.

Section 5 Assessment of Package Conformance

5.1 Hypothetical Accident Conditions (71.51 (a)(2))

There should be no escape of radioactive materials greater than A_2 in one week and no external dose rate greater than 1 R/hr at 1m from the external surface with the maximum radioactive contents which the package is designed to carry.

5.2 Transport Package Contents

The SENTRY transport package is designed to carry a special form cobalt-60 source capsule. Containment of the radioactive source is tested at manufacture. The source capsule design has been certified in accordance with the performance requirements for special form as specified in 10 CFR Part 71 and IAEA TS-R-1 1996.

This test plan therefore does not discuss/specify tests associated with the containment of the radioactive source. The purpose of the tests is to demonstrate that the source remains shielded within the limits specified by the regulations.

Since source integrity has been demonstrated through special form testing, a simulated source will be used during testing of the package. The radiation levels after testing will be measured by replacing the simulated source with an active source. The post-test measurements will be compared with pre-test measurements to verify the source has not shifted within the shield.

Section 6 Construction and Condition of Test Specimens

The SENTRY transport package test specimens shall be constructed in accordance with QSA Global engineering drawings and Quality Assurance Program. The drawings and quality program accurately represent the intended design along with methods for manufacturing and verifying the finished product.

Figure 6.1 is a picture of the test specimen. Figure 6.2 is a picture of the SENTRY transport package standard configuration. Notice they are the same package except for the yellow plastic inserts and attaching hardware.

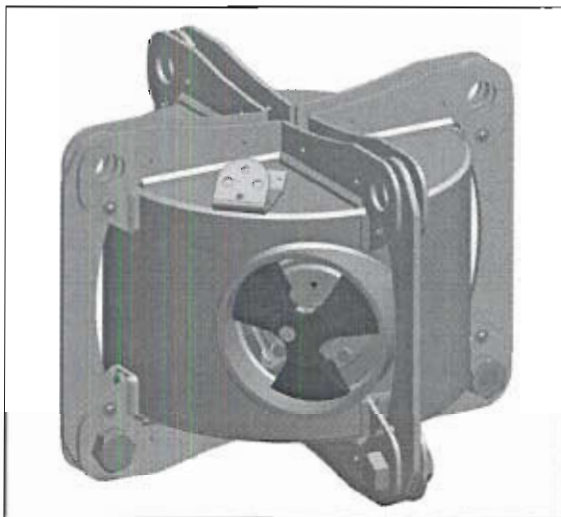

Figure 6.1. Test Specimen – SENTRY Transport Package Special Configuration.

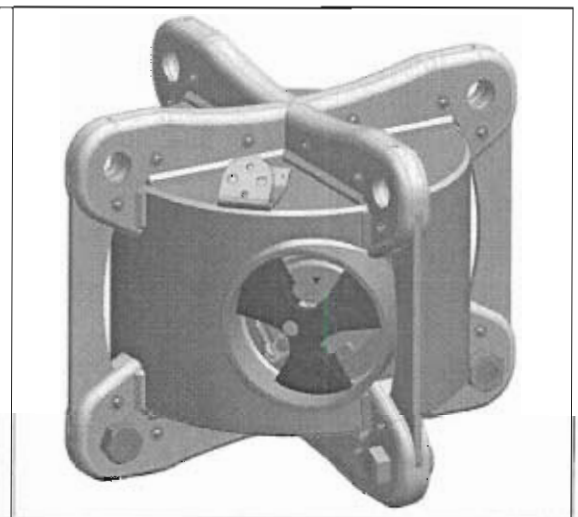

Figure 6.2. For reference - SENTRY Transport Package Standard Configuration.

Table 6.1 Test specimen build documentation and identification.

Table 6.1. Test Specimen Manufacturing Documentation and Identification			
Test Specimen Configuration	**Drawing Number**	**TMI**	**Serial Number(s)**
SENTRY 330 Projector – Special Standard	TP86000-330X	199	TP180D

6.1 Test Specimen Justification

The SENTRY 330 transport package – Standard configuration is the heaviest package of all the SENTRY transport packages. The maximum weight of the package in this configuration is 780 pounds. The array of handling rib assemblies attached to the welded body increases the weight by 80 pounds more than the Basic configuration. The handling ribs, when present, provide protection and substantial impact energy absorption to the package in all but a few free drop orientations. The few unprotected orientations can be narrowed down to one worst case orientation with the handling ribs attached. This worst case orientation shall be tested in this plan. The SENTRY 330 projector – special standard configuration, with handling ribs but without the plastic inserts, shall be used for assessing compliance to the free drop testing requirements of 10 CFR Part 71 and IAEA TS-R-1 1996 for all SENTRY transport packages built to the standard configuration.

6.2 Structural Materials of Test Specimen

The structural materials of all SENTRY transport packages are Ti-6Al-4V titanium, 304/304L and 17-4 PH stainless steel. The shielding materials are U-0.75% Ti depleted uranium and tungsten. Fasteners needed to attach the rear plate assembly to the welded body are type 17-4 PH stainless steel. Materials used in the non-safety related components are 300 series stainless steel, brass, copper, plastic, and rubber.

6.3 Temperature Conditions

The fracture toughness (strength and ductility) of the primary structural material, 304/304 L stainless steel, does not change enough within the temperature range of minus 40°F to plus 100°F to affect the results of the tests in this plan. Depleted uranium is a relatively less ductile material than the stainless steel but also does not appear to have a ductile to brittle transition temperature within this range.

Test plan/report 79 shows the compressive impact strength of the polyurethane foam changes very little between minus 40°F to plus 100°F. This change in compressive strength is not expected to affect the results of the tests in this plan. The foam fill limits the shields movement during the impact of the drop test. However, the shield relies primarily on the welded stainless steel structure and the titanium pins to keep it secure and in place during impact.

Therefore, all test specimens will be dropped at ambient temperature since a temperature within minus 40°F to plus 100°F is not expected to change the results of the tests.

6.4 Pressure Conditions

Except for the source capsule, the transport package is open to the atmosphere and therefore in equilibrium with the outside pressure of the package. The internal operating pressure of the containment system, namely the source capsule, has been tested to withstand the pressure range of 3.5 PSI absolute to 20 PSI absolute. The tests will therefore be performed at atmospheric pressure.

6.5 Vibration Conditions

Vibration normally occurring in transport will be addressed under test plan 178, ISO/ANSI performance testing, and is not expected to adversely affect the structural aspects of the transport package. The rear plate assembly fastening system however could possibly be affected by transport vibration. These fasteners are preloaded or stretched within the materials proportional limit by a specified torque applied during assembly. The assembly preload is designed to withstand dynamic forces and vibration normal to transport.

Section 7 Material and Equipment List

The equipment list worksheets in Section 9 identify the equipment required, with additional space to list other necessary equipment and measuring instruments needed to perform the tests. Additional materials and equipment used to facilitate the tests will be listed as needed.

Section 8 Test Procedure

All test specimens must follow the planned sequence presented below. Any change to the planned drop orientations shall require a documented justification and description for the new orientation.

8.1 Test Sequence

1. Test specimen preparation and inspection.
2. 9m free drop test.
3. Puncture test.
4. Test inspection.
5. Thermal assessment.
6. Final test assessment.

8.2 Test Specimen Preparation and Inspection

1. Manufacture the SENTRY test specimen per table 6.1.
2. Inspect the test specimens to ensure that:
   - All fabrication and inspection records are documented in accordance with the QSA Global Quality Assurance Program.
   - The test specimens comply with the requirements of the drawing.
3. Perform and record the radiation profile in accordance with QSA Global Work Instruction WI-Q-1806.
4. Engineering, Regulatory Affairs and Quality Assurance will jointly verify that the test specimens comply with the drawings and the QSA Global Quality Assurance Program.
5. Measure the location of the simulated source.
6. Prepare the test specimens for transport.

8.3 9m Free Drop Tests per 10 CFR 71.73(c) (1)

The 9 meter free drop test shall demonstrate compliance to the hypothetical accident sequence.

The 9 meter (30 foot) drop heights are minimum heights. The actual or adjusted free drop heights shall be recorded on the test data sheet.

8.3.1 9 Meter Free Drop Test Orientation Justification

Drop Orientation Target	Drop Orientation Diagram	Justification
Extended face of rear plate access port	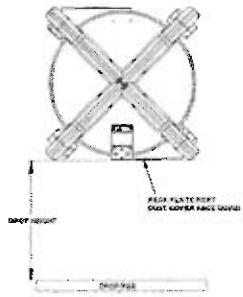	Rib assemblies provide little impact absorption. Relatively flat face of access port increases stopping rate resulting in high impact loads to components important to safety. This is the most vulnerable orientation for the standard configuration.
Extended edge of the rear plate access port	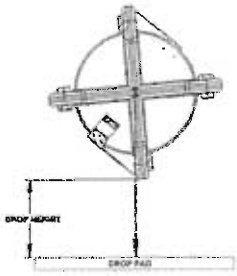	Rib assembly and brace provides substantial impact absorption at the point of impact. Rib and brace deforms upon impact reducing deformation to access port and rear plate. Not the most vulnerable orientation for the standard configuration.
Curved side surface of welded body at the seam weld	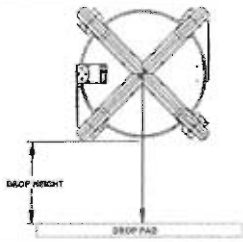	Curved surface allows impact absorbing deformation to welded body decreasing stopping rate. Test Results of Test Plan 180 showed minor damage to this area when dropped twice from 32 feet. Not the most vulnerable orientation for the standard configuration.
Curved edge of the welded body directly on the seam weld	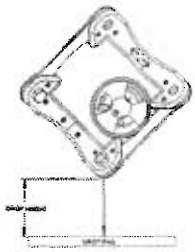	Rib assemblies provide substantial impact absorption. Curved edge of welded body protected by handling ribs. Not the most vulnerable orientation for the standard configuration.
Bottom or top surface of welded body	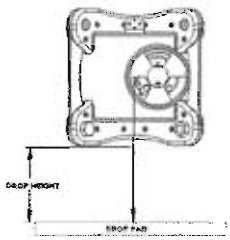	Rib assemblies provide substantial impact absorption. Bottom and top surface protected by handling ribs. Not the most vulnerable orientation for the standard configuration.

8.3.2 9m Free Drop Test Set-up

1. Orient the test specimen on the drop pad.
2. Photograph the set-up.
3. Measure and record the ambient temperature.
4. Raise the test package to the drop height and in its orientation over the drop pad.
5. Start the video recorder.
6. Drop the test specimen.
7. Stop the video recorder.
8. Record and photograph the damage to the test specimen.

8.3.3 9m Free Drop Test Orientation

Figure 8.3.3 shows the package orientation for the 9 meter drop. This drop orientation attempts to shift the shield enough to break the source wire and/or remove the rear-plate by damaging the attachment bolts. The impact surface is on the extended face of the dust cover and rim of the rear-plate access port.

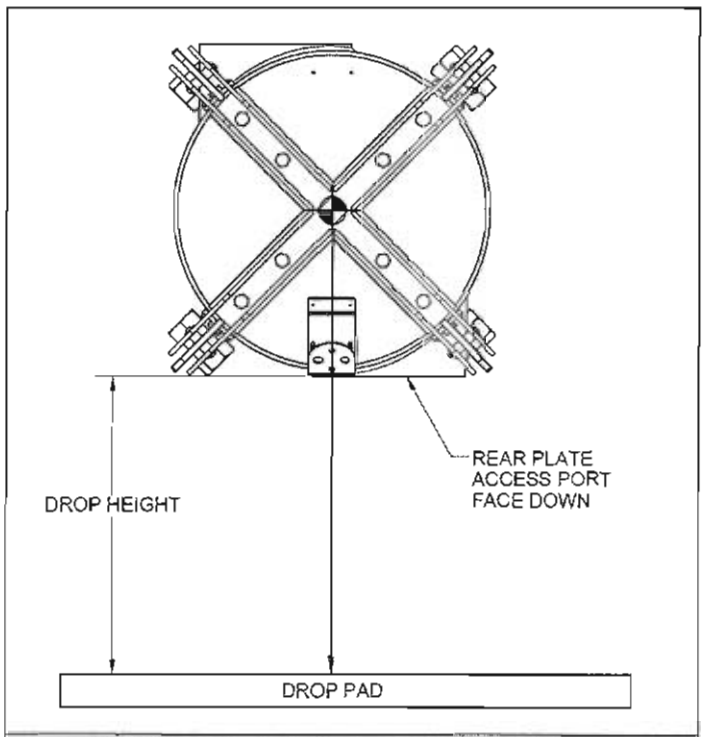

Figure 8.3.3: 9 Meter Free Drop Orientation

8.3.4 9m Free Drop Test Assessment

Upon completion of each test, **Engineering, Regulatory Affairs** and **Quality Assurance** team members will jointly take the following actions:

- Review the test execution to ensure that each test was performed in accordance with 10 CFR 71, IAEA TS-R-1 1996, and this test plan.
- Make a preliminary evaluation of the specimens relative to the requirements of 10 CFR 71 and IAEA TS-R-1 1996.
- Assess the damage to each specimen to decide whether testing of that specimen is to continue.
- Evaluate the condition of each specimen after the 9m free drop test to determine what changes, if any, are necessary in package orientation in the puncture test to achieve maximum damage.

8.4 Puncture Test per 10 CFR 71.73(c) (3)

The package is dropped from 1m (40") or an adjusted height onto the puncture billet. This test uses the 12" high puncture billet. The billet meets the minimum height (8") required in 10 CFR 71.73(c) (3). The specimen has no projections or overhanging members longer than 12" which could act as impact absorbers, allowing the billet to cause the maximum damage to the specimen. The billet is to be bolted to the drop surface used in the drop tests.

The puncture drop height shall be adjusted based on the maximum weight of the package and shall be recorded on the test data sheet.

8.4.1 Puncture Test Orientation

Figure 8.4.1 shows the package orientation for the puncture drop. This drop orientation attempts to damage the lock assembly on the rear plate and/or remove the rear-plate by damaging the attachment bolts. The impact surface is the dust cover inside the rear-plate access port.

If the orientation needs to be changed, the new orientation must be documented and approved with a justification describing how it would be a worst condition than the planned orientation.

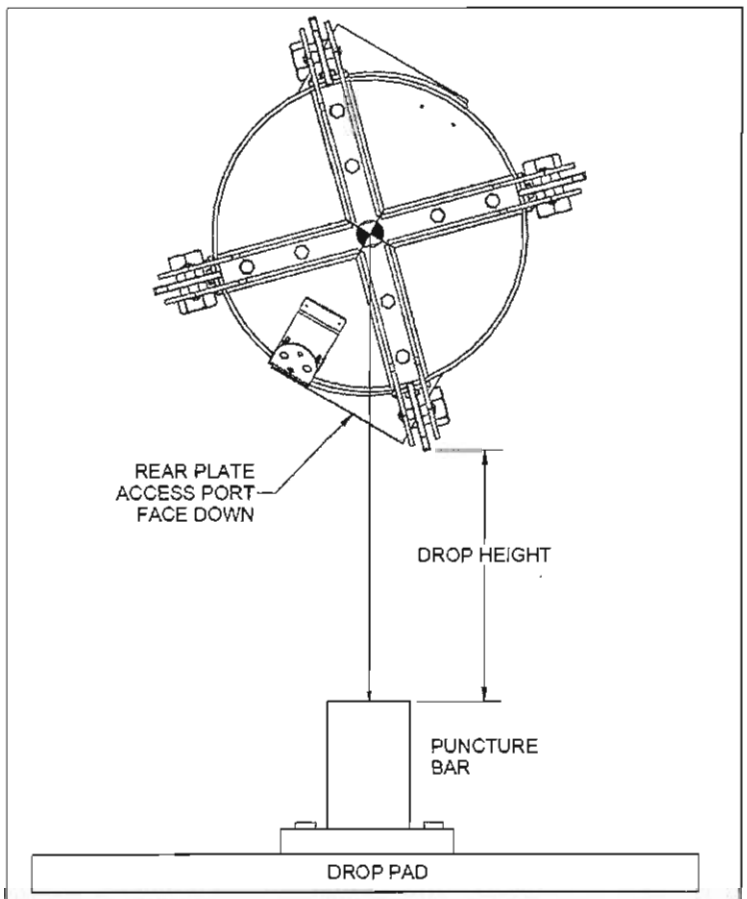

Figure 8.4.1: Puncture Drop Orientation

8.4.2 Puncture Test Set-up

1. Orientation the test specimen over the puncture billet.
2. Photograph the set-up.
3. Measure and record the ambient temperature.
4. Raise the test specimen to the drop height and in its orientation over the puncture billet.
5. Start the video recorder.
6. Drop the test specimen.
7. Stop the video recorder.
8. Record and photograph the damage to the test specimen.

8.4.3 Puncture Test Assessment

Upon completion of the test, **Engineering, Regulatory Affairs** and **Quality Assurance** team members will jointly take the following actions:

- Review the test execution to ensure that the tests were performed in accordance with 10 CFR 71, IAEA TS-R-1 1996, and this test plan.
- Make a preliminary evaluation of each specimen relative to the requirements of 10 CFR 71 and IAEA TS-R-1 1996.

8.5 Post Test Inspection

Perform the test inspection after the puncture test.

1. Measure and record the damage to the test specimen.
2. Measure the location of the simulated source.
3. Remove and assess the condition of the simulated source.
4. Reassemble the packages using a representative active source, making sure that the source location and the package configuration are the same as they were immediately after the puncture test.
5. Measure and record a radiation profile of each test specimen in accordance with QSA Global Work Instruction WI-Q-1806.
6. Assess the significance of any change in radiation at the surface and at one meter from the packages.
7. Determine whether it is necessary to radiograph the test specimens for inspection of hidden component damage or failure.
8. Record any damage or failure found in radiograph of the test specimens, if performed.

8.6 Thermal Test Assessment per 10 CFR 71.73(c) (4)

The test specimen shall be assessed to determine whether the test specimen will pass the thermal test.

The assessment will be based on the examination of the damage to the test specimen after the puncture test. Experience from thermal testing the Model 660 & Model 680 transport packages has shown the shield will oxidize and diminish its ability to protect only when the adjacent foam fill is allowed to combust and then fall away from the shield. Charred foam seems to provide enough thermal insulation to prevent the shield from oxidizing as long as the charred foam remains in place. Any damage producing an unintentional opening in the shell or welded body would need to be assessed to determine whether the transport package would pass or fail the thermal test.

Engineering, **Regulatory Affairs**, and **Quality Assurance** team members will make a final assessment of each test specimen and jointly determine whether the specimens meet the requirements of 10 CFR 71 and IAEA TS-R-1 1996.

8.7 Test Specimen Storage

Place the test specimens in an appropriate container, if necessary and store. Written management approval is needed to dispose of any test specimen of this test plan. If the specimens are disposed of, then include a copy of the signed disposal approval in the SENTRY design history file.

Section 9 Worksheets

Use the following worksheets for executing the tests of section 8. Record the information onto copies of these worksheets for each test performed.

Attach a copy of the relevant inspection report or calibration certificate after the range and accuracy of the equipment has been verified.

Test Specimen & Equipment List

Test Specimen & Equipment Documentation

Test Specimen

Configuration	Drawing Number	Serial Number	Attach IIR	Attach NCR	Attach Route Cards

Tools & Equipment

Tool Description	Enter the Model and Serial Number Mark NA when not used.	Attach Inspection Report or Calibration Certificate
Drop Surface, Drawing No. T10740	**S/N 001**	**Yes**
Record any additional tools used to facilitate the test and attach the appropriate inspection report or calibration certificates.		

Signature	Print Name	Date
Engineering:		
Regulatory:		
Quality Assurance:		

Free Drop & Puncture Test Checklist

Test:		
Test Location:		
Step	**Data**	
1. Record test specimen serial number:		
2. Record the test specimen weight:		
3. Record the ambient temperature (°C):		Instrument S/N:
4. Identify set-up orientation figure:		
5. Record drop height.		
6. Photograph set-up in at least two perpendicular planes.		
7. Begin video recording of the test so that impact is recorded.		
8. Release the test specimen.		
9. Stop the video recorder. Ensure the point of impact and orientation specified in the plan has been achieved.		
10. Record the damage to the test specimen. Use a separate sheet and attach, if needed.		
11. Record location of simulated source, if possible.		
12. Engineering, Regulatory Affairs and Quality Assurance make a preliminary assessment relative to 10 CFR 71. Record the assessment on a separate sheet and attach.		
Test witnessed by (Signature)	**Print Name**	**Date**
Engineering:		
Regulatory Affairs:		
Quality Assurance:		

Free Drop & Puncture Test Data Sheet

Test Specimen Serial No.:	Test:
Test Date:	Test Time:
Describe drop orientation and drop height:	
Describe impact (location, rotation, etc.):	
Describe on-site inspection (damage, broken parts, etc.):	

On-site test assessment:

- Was the test performed in accordance with 10 CFR 71, IAEA TS-R-1 1996, and this test plan? **Yes or No.**
- Does the test specimen meet the requirements of 10 CFR 71 and IAEA TS-R-1 1996 for this test? **Yes or No.**
- Any changes to subsequent drop orientations needed to achieve maximum damage? **Yes or No.** If yes, then identify and justify.
- Did sufficient damage occur at or on the rear-plate attachment area to warrant further drop testing the SENTRY 110 Projector – Basic configuration because of its thinner rear-plate? **Yes or No.**
- Should testing continue with this test specimen? **Yes or No.** If yes, next test: _____
- Will the test specimen pass the thermal test based on the accumulated damage assessment? **Yes or No**

Engineering: **Regulatory:** **QA:**

Describe any post-test disassembly and inspection:	
Describe any change in source position (if possible):	
Describe results of radiography (if performed):	
Completed by:	Date:

Test Inspection Data Sheet

Test Specimen Serial No.:	Last Test Performed:
Describe and measure (if appropriate) any damage, signs of permanent strain, deformation and/or broken parts.	
Describe the condition of the simulated source wire assembly.	
Reassemble the package using a representative active source, making sure that the source position and the package configuration is the same as they were immediately after the last test. Measure and record a radiation profile of each test specimen in accordance with QSA Global Work Instruction WI-Q-1806.	
Compare the pre-test dose levels with post-test dose levels at the surface of the package and at 1 meter from the surface of the package.	
Is a radiograph required to inspect for hidden component damage or failure? If radiography is performed, describe any damage or failures found.	
Completed by:	Date:

* There is no page 29. RB 30 Aug 2010

2.12.12 Test Plan Report 195 Revision 0 dated 21 July 2010

QSA GLOBAL	Document Number **F-E-1808-1** **Test Plan Cover Sheet**	Revision 0

REPORT - TEST PLAN 195

SENTRY TRANSPORT PACKAGE
STANDARD CONFIGURATION
TYPE (B) TRANSPORT TESTS

Originator	S. Gramin	Date:	19 JULY 2010

APPROVALS			
Engineering		Date:	19 Jul 10
Regulatory		Date:	19 JUL 10
Quality Assurance	C. Renghan	Date:	21 Jul 10

REPORT - TEST PLAN 195

SENTRY TRANSPORT PACKAGE STANDARD CONFIGURATION TYPE (B) TRANSPORT TESTS

JULY 2010

Contents

SECTION 1 INTRODUCTION 2

SECTION 2 CONSTRUCTION AND CONDITION OF TEST SPECIMENS 3

SECTION 3 TEST SETUP AND FAILURE MODES 5

3.1 Test Orientations and Failure Modes 5

3.2 Drop Height Adjustment 5

SECTION 4 TEST RESULTS 6

SECTION 5 TEST ASSESSMENTS 11

5.1 Normal Conditions of Transport Test Assessment 11

5.2 30-Foot Free Drop & Puncture Test Assessment 11

5.3 Reverse Sequence 30-Foot Free Drop & Puncture Assessment 11

5.4 Thermal Test Assessment 12

5.4.1 Condition of Test Specimen before Thermal Test 12

5.4.2 Material Properties at Elevated Temperatures 12

5.4.3 SENTRY 330 or 110 Projector - Standard Configurations 13

5.4.4 SENTRY 330 or 110 Projector - Alternate Configurations 13

5.4.5 SENTRY Changer (Model 867) – Basic or Standard Configurations 13

SECTION 6 FINAL TEST ASSESSMENT 15

APPENDIX A: RADIATION PROFILE RESULTS 16

APPENDIX B: TEST DATA WORKSHEETS 17

APPENDIX C: TEST SPECIMEN MANUFACTURING RECORDS 17

APPENDIX D: TEST & MEASUREMENT CALIBRATION RECORDS 17

Test Plan 195 - Report

Section 1 Introduction

This report documents the Type B transport test results of Test Plan 195 performed on the SENTRY transport package in the standard configuration. The results confirm the SENTRY transport package in its heaviest configuration tested in the most vulnerable drop orientation passes all the hypothetical accident conditions transport test requirements specified in Test Plan 195, the Code of Federal Regulations, 10 CFR Part 71, revised as of March 31, 1999 and criteria stated in the IAEA Regulations for the Safe Transport of Radioactive Material, No. TS-R-1 1996 Edition (Revised).

In order to determine the cumulative effect on the SENTRY transport package, the HAC test evaluation is based on the sequential application of the tests specified in the order indicated in 10 CFR Part 71. Alternatively, if the test sequence had been performed in reverse order to the sequence identified in 10 CFR Part 71, with the puncture test performed before the 30-foot free drop, the damage indicates the there would be no change in the final assessment. See section 5.3 for the reverse order assessment.

The thermal test portion of the HAC test sequence is not performed based on the condition of the test specimen after the 30-foot free drop and puncture test sequence. See section 5.4 for this assessment.

The following is the pass criteria for a Type B transport package after being subjected to the HAC test sequence:

- There shall be no loss or dispersal of radioactive material from the package.
- There shall be no external radiation dose rate exceeding 10-mSv/h (1-rem/h) at 1 m (40 in) from the external surface of the package.

Section 2 Construction and Condition of Test Specimens

The test specimen is constructed in accordance with QSA Global engineering drawings and Quality Assurance Program. The drawings and manufacturing documents accurately depict the intended design along with methods for building and verifying the finished product. There were no deviations and/or changes to the test specimen before testing. See Appendix C: Test Specimen Manufacturing Records.

The test specimen built for this test is a variation of the SENTRY 330 "Standard" configuration. **Figure 2.1** and **Table 2.1** show test specimen, serial number TP180D, built with the optional handling ribs of the standard configuration but without the plastic inserts. This variation would not normally be used as a SENTRY transport package, but is tested to demonstrate compliance and allow shipment in the event the plastic rib inserts of the standard configuration were removed or damaged. Shipping labels and nameplates were not attached for testing.

Table 2.1: Test Specimen Manufacturing Documentation

Test Specimen	Drawing No.	TMI	Serial No.	Weight (Lbs)
SENTRY 330 Special See Figure 2.1	TP86000-330X	199	TP180D	725

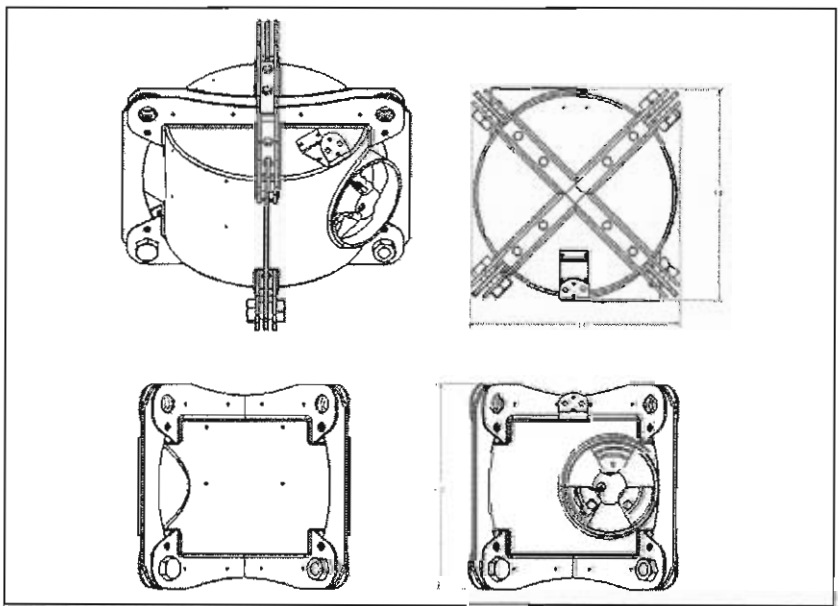

Figure 2.1: SENTRY Transport Package - Special Configuration. Test Specimen TP180D.

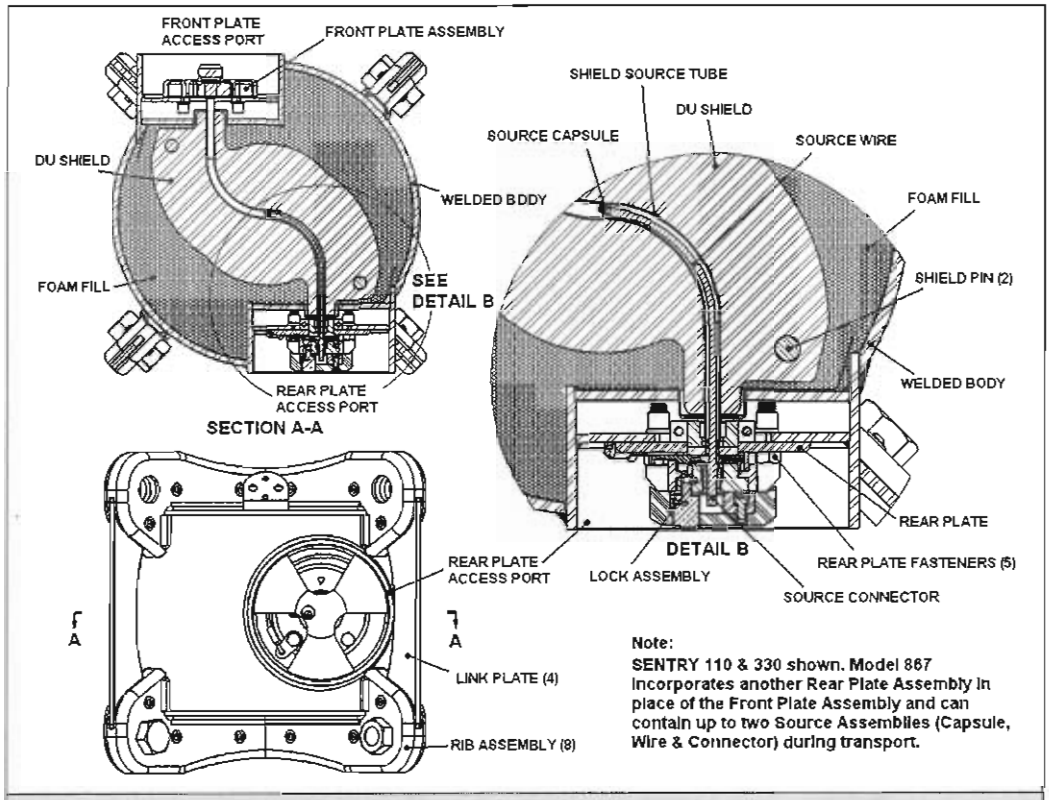

Figure 2.2: SENTRY Transport Package Common Components

Figure 2.2 shows the major assemblies and common components of the SENTRY transport package. The nomenclature used in **Figure 2.2** is referenced throughout this report.

The primary containment system of the package is the completely seal welded Model 600 source capsule assembly. The capsule assembly, tested to the ANSI/ISO class 4 or 7MPa pressure test requirements, is manufactured at atmospheric pressure and ambient temperature and therefore does not to be adjusted for the test.

The secondary containment system, the transport package rear plate assembly and shield container, is open to the atmosphere and therefore in constant equilibrium with changing operating pressures.

The structural materials used in the construction SENTRY transport package retain their key mechanical and physical properties between -40°C (-40°F) and +38°C (+100°F). Therefore, the temperature of the test specimen did not need to be adjusted for the tests performed in test plan 195.

Section 3 Test Setup and Failure Modes

3.1 Test Orientations and Failure Modes

The test orientations used in the 30-foot free drop and puncture drop target the rear plate lock assembly side of the package in an attempt to cause sufficient damage to elevate radiation measurements around the package. The possible failures considered under the required test conditions potentially leading to elevated radiation measurements on and around the transport package include the following:

1. Fracture of the depleted uranium shield allowing a direct beam of radiation to transmit to the exterior of the package.
2. Extreme displacement of the shield within the package enough to position the source in a much less shielded location.
3. Any release or loss of control of the source caused by either; damage to the rear plate assembly enough to allow the source to exit the package, loss of all rear plate hex bolts and/or detachment of the source capsule from the source wire assembly.
4. A significant rupture or opening in the exterior of the package leading to loss of foam protecting the shield during the thermal test.

3.2 Drop Height Adjustment

The drop test heights specified in 10 CFR Part 71 are adjusted higher in the 30-foot drop and 40-inch puncture tests. The adjusted drop height allows for future SENTRY transport packages built heavier than the actual test specimens but less than the maximum allowable weight specified for the transport package configuration to comply with 10 CFR Part 71.

The adjusted drop height is determined by multiplying the ratio of the maximum allowable package weight and the actual test specimen weight by the required drop test height, 30-feet or 40-inches.

TP180D weighs 725 lbs and is essentially a SENTRY 330 standard configuration package. The maximum allowable weight for a SENTRY 330 standard configuration package is 780 lbs. The weight ratio for the adjusted height is 780 ÷ 725 or is 1.076. Therefore, the adjusted height for the 30-foot free drop is 32.3 feet or 32 feet 4 inches. The adjusted height for the 1 meter (40-inch) puncture drop is 43 inches.

The impact energy produced by the common adjusted height in all drop tests is equal to or greater than the impact energy produced by the transport package built to its maximum weight and dropped at the required drop height specified in 10 CFR Part 71.

Section 4 Test Results

In the 30-foot free drop test, test specimen TP180D, was dropped from 32.3 feet in the planned orientation. The impact hit squarely on the plastic dust cover and end face of the rear access port. The impact caused the protruding end of the rear plate access port to pucker in about ¼ inch toward the rear plate. The two rib assemblies on the rear access port side of the package bent outward about an inch. Two rib bolts and one load pin broke upon impact.

The puncture drop targeted the dust cover at an angle in an attempt to pry off the rear plate lock assembly and attachment fasteners. The specimen was dropped 43 inches in the planned orientation above the puncture bar onto the dust cover. The plastic dust cover shifted up about ¼ inch and dented in from hitting the corner of the puncture billet.

After the 30-foot and puncture tests, the simulated (demo) source remained secure in the fully shielded position. No change was found in the source location measurements before and after the tests. Post test damage examination revealed the lock/dust cover and half the source connector could be removed from the package. However, removal of these components and with the source connector cut in half did not compromise the radiological safety of the SENTRY transpcrt package.

The radiation profile measurements taken on the package surface and at 1 meter with the source in the same location after the puncture test show essentially no change in dose levels compared to measurements taken before testing. Any slight measurement difference can be attributed to a minor variation in the accuracy of the measuring equipment (+/-10% for the E600 probe and meter). See Appendix A: Radiation Profile Results for the actual inspection data.

Table 4.1.1: Maximum Radiation Measurements			
At Surface of Package		At 1 Meter from Surface of Package	
Initial Build	Post Test	Initial Build	Post Test
56 mR/h	56 mR/h	1.43 mR/h	1.10 mR/h

The 30-foot and puncture drop sequence did not create an opening in the package exterior. With no opening in the package to allow the foam fill to fall away from the DU shield in a thermal test, the package will survive the thermal test without elevating radiation levels on or around the transport package.

Tables 4.1.2 and 4.1.4 show the test setup data and orientations for the 30-foot free drop and puncture tests respectively. Tables 4.1.3 and 4.1.5 present the damage report for the 30-foot free drop and puncture tests respectively. Table 4.1.6 reveals the damage to the test specimen found during the post test examination.

Table 4.1.2: 30-Foot Free Drop Test Setups	
Changes to the planned drop orientation.	None
Test Specimen Weight	725 pounds
Actual Drop Height	9.8 Meters (32.3 Feet)
Temperature during test	90 °F/ 32 °C

Figure 4.1.1: 30-Foot Free Drop Side View Orientation

Figure 4.1.2: 30-Foot Free Drop End View Orientation

Table 4.1.3: 30-Foot Free Drop Test Damage Report	
Impact on the rim of access port tube, face of the plastic dust cover and ribs/link plates. • The protruding side of the rear access port tube bent in towards the package. • Two rib bolts broken and removed. One rib pin and screw broken and removed. • No damage to the rear plate or the rear plate attachment bolts.	
Pre-test source location dimension	6.00 inches
Post-test source location dimension	6.00 inches

Figure 4.1.3: Damage from 30-Foot Free Drop Test – Overall View.

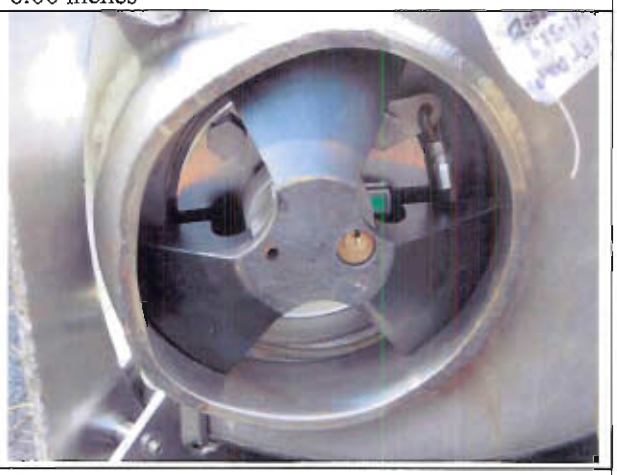

Figure 4.1.4: Damage from 30-Foot Free Drop Test – Rear Plate Close-up.

Table 4.1.4: Puncture Drop Test Setup	
Changes to the planned drop orientation.	None
Test Specimen Weight	725 pounds
Actual Drop Height	1.1 Meters (43 inches)
Temperature during test	91 °F/33 °C
Figure 4.1.5: Puncture Drop Side View Orientation	**Figure 4.1.6: Puncture Drop End View Orientation**

Table 4.1.5: Puncture Drop Test Damage Report	
Impact on plastic dust cover opposite the brass plunger lock. • No damage to the rear plate or the rear plate attachment bolts. • Plastic dust cover dented and bent. • Lock cover appears to be shifted towards the plunger lock.	
Pre-test source location dimension	6.00 inches
Post-test and radiation profile inspection source location dimension	6.00 inches
Figure 4.1.7: Damage from Puncture Drop Test	**Figure 4.1.8: Close-up of damage from Puncture Drop Test.**

Table 4.1.6: Post Test Examination Photos

Figure 4.1.9: Two missing rib bolts on bottom of package.

Figure 4.1.10: Dented and bent plastic dust cover.

Figure 4.1.11: Lock cover translated in shear towards brass plunger lock.

Figure 4.1.12: Another view of translated lock cover.

Figure 4.1.13: Source connector, lock pin and cover pins broken by shearing action of lock cover translating across lock face.

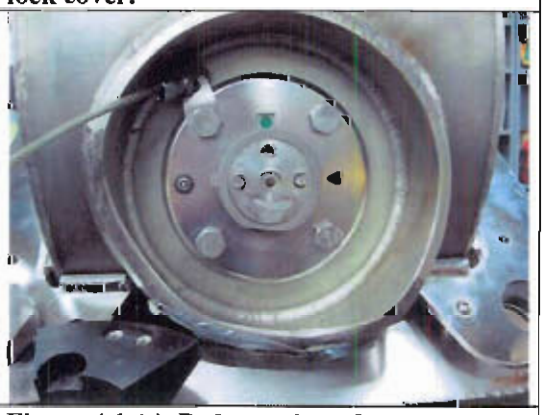

Figure 4.1.14: Deformation of access port shown with lock and dust cover removed.

Figure 4.1.15: Source connector sliced in half but remained safe and secure in package.

Figure 4.1.16: Broken parts of lock cover assembly.

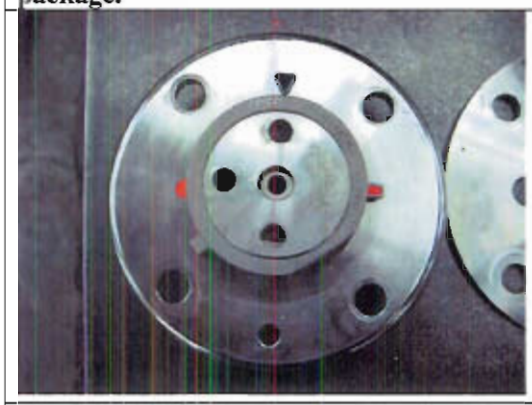

Figure 4.1.17: Dent on selector ring, but no other damage to rear plate lock assembly.

Figure 4.1.18: No damage to back side of rear plate lock assembly.

Figure 4.1.19: Slight oval shape to shield source tube (center), but no other damage to shield – rear plate interface.

Figure 4.1.20: No damage to rear plate attachment fasteners.

Section 5 Test Assessments

5.1 Normal Conditions of Transport Test Assessment

After the 30-foot free drop test, there was no loss or dispersal of radioactive contents, no significant increase in external surface radiation levels and no substantial reduction in the effectiveness of the packaging. In addition, there was no loss of shielding integrity resulting in more than a 20% increase in the radiation level at any external surface of the package

The results of test plan 180 (report #1 & #2) along with the results of this test demonstrates the SENTRY transport package in the standard configuration meets the normal conditions of transport (NCT) test requirements.

5.2 30-Foot Free Drop & Puncture Test Assessment

The 30-foot free drop and puncture tests were performed in accordance with test plan 195, 10 CFR 71, IAEA TS-R-1 1996.

After the 30-foot free drop and puncture tests, the test specimen continued to successfully meet the hypothetical accident conditions transport requirements of 10 CFR 71 and IAEA TS-R-1 1996. After the test, there was:

- No loss or dispersal of radioactive material or contents.
- No external radiation dose rate exceeding 10-mSv/h (1-rem/h) at 1 m (40 in) from the external surface of the package.
- No escape of other radioactive material exceeding a total amount A_2 in 1 week.

5.3 Reverse Sequence 30-Foot Free Drop & Puncture Assessment

If the test sequence was reversed and the puncture test performed before the 30-foot free drop, the SENTRY transport package would continue to meet the HAC requirements of 10 CFR Part 71. The test results indicate there is no evidence to suggest the puncture bar is capable of affecting the source security of the package.

The results show the puncture test does not damage the rear plate lock assembly and its attachment system recessed into the access port of the package. The recessed rear plate assembly prevents an impact of the subsequent 30-foot free drop test in any orientation to damage the rear plate lock assembly enough to allow the source wire assembly to move out of its fully shielded position.

Therefore, the SENTRY transport package to successfully meets the hypothetical accident conditions transport test requirements of IAEA TS-R-1 1996.

5.4 Thermal Test Assessment

Review of the damage to the test specimen after the drop tests suggest the fire test would have no affect on the radiation measurements taken after the drop tests. The reasons for this can be justified based on the condition of the test specimen after the drop test and the properties of the materials used to secure and shield the source within the specimen.

5.4.1 Condition of Test Specimen before Thermal Test

- The internal structure for supporting the DU shield is intact and fully functional. The structure consists of the depleted uranium shield, the stainless steel welded shell body, the titanium shield locating pins, the stainless steel access port tubes, and the stainless steel rear mounting plates with stainless steel rivet nuts. A copper barrier exists between all stainless steel components and the DU shield.

- The test results showed no unintentional openings in the welded shell body to allow the polyurethane foam, filling the void between the DU shield and shell body, to fall away from the package in a thermal test. The polyurethane foam provides thermal insulation and blocks air flow around the shield protecting it from oxidizing during the thermal test.

- The source assembly is damaged, but functionally intact and secure in the shielded position.

- The rear plate lock assembly continues to secure the source assembly to the package in its shielded position.

5.4.2 Material Properties at Elevated Temperatures

- The melting temperature for all materials (depleted uranium, stainless steel, tungsten, and titanium) of the structure, rear plate assembly and source assembly is above the thermal test temperature of 800°C.

- The thermal expansion for all materials of the structure is less than the design clearance allowed for assembly.

- The stainless steel and titanium components of the structure, rear plate assembly and source assembly have about 30% and 60% of their room temperature strength at 800°C, respectively.

  The load condition for the thermal test is for the structure to support the static weight of the shield in suspension. The dynamic impact nature of the drop tests subjects the structure to a force over 100 times the static weight of the shield. This suggests the strength of the materials used in the structure would need to decrease by two orders of magnitude or to about 1% of their strength at room temperature.

The 30-minute thermal test is not long enough for significant creep deformation to occur in the structure.

5.4.3 SENTRY 330 or 110 Projector - Standard Configurations

The standard configuration, without its plastic rib inserts, is identical to test specimen TP180D. The plastic rib inserts are covers for the handling rib mounting bolts, help identify the package, and provide a mounting surface for the package. The additional 11 pounds of weight added to the package by the inserts is accounted for in the adjusted drop height calculation. The plastic rib inserts will have no adverse affect on the ability of the SENTRY transport package to meet the HAC test requirements.

Testing the standard configuration would not cause radioactive material to be released and would not cause the external radiation dose rate to exceed 10-mSv/h (1-rem/h) at 1 m (40 in) from the external surface of the package.

5.4.4 SENTRY 330 or 110 Projector - Alternate Configurations

The alternate configuration uses a nut ring feature in place of the rivet nuts to attach the rear plate lock assembly. The test results show the rivet nuts and the mating rear plate attachment bolts were not affected in any of the tests. Both the nut ring and the rivet nuts are captured behind the mounting plate and both are made from an austenitic stainless steel. However, the nut ring is structurally stronger than the rivet nuts because it is 0.23 inches thicker than the rivet nut thread engagement length. The use of the nut ring in place of the rivet nuts will allow the SENTRY transport package to perform as good or better in the NCT and HAC testing.

Testing the alternate configuration would not cause radioactive material to be released and would not cause the external radiation dose rate to exceed 10-mSv/h (1-rem/h) at 1 m (40 in) from the external surface of the package.

5.4.5 SENTRY Changer (Model 867) – Basic or Standard Configurations

The Model 867 changer is structurally identical to the test specimen. However, there are some minor differences in the rear plate lock assembly and the shield source tube.

The source tube of the Model 867 changer has a center partition which blocks the movement of the source wires in the direction opposite the rear plate lock assembly. The only way out is back through the rear plate lock assembly.

The Model 867 rear plate lock assembly uses two fork shaped lock pins instead of a lock slide and lock sleeve to secure the source wire assembly. The lock pins engage the helical wrap of the Teleflex wire below the connector of the source wire assembly. The source wire connector on the Model 867 could be completely removed from the wire and the capsule location within the shield of Model 867 package would remain essentially unaffected.

The lock pins are well protected within the thick stainless steel selector ring retainer. No damage was found on selector ring retainer, lock slide or lock sleeve of the tested

specimen TP180D. It can be assumed the selector ring retainer and lock pins of the Model 867 would also not be damaged if tested.

Based on the above, testing the Model 867 source changer configuration would not cause radioactive material to be released and would not cause the external radiation dose rate to exceed 10-mSv/h (1-rem/h) at 1 m (40 in) from the external surface of the package.

Section 6 Final Test Assessment

The SENTRY transport package did not lose or disperse radioactive material and did not have external radiation dose rates exceeding 10-mSv/h (1-rem/h) at 1 m (40 in) from the external surface of the package after being subjected to the HAC test sequence identified in 10 CFR Part 71.

The results and assessments in this report confirm the SENTRY transport package tested in its heaviest configuration, worst case condition, and most severe orientation satisfies the HAC test requirements of Test Plan 195, the Code of Federal Regulations, 10 CFR Part 71, revised as of March 31, 1999 and criteria stated in the IAEA Regulations for the Safe Transport of Radioactive Material, No. TS-R-1 1996 Edition (Revised).

Appendix A: Radiation Profile Results

Radiation Profile Inspection

Initial Build Profile Results

QSA GLOBAL

SHIELDING PROFILE AND INSPECTION FORM (SPIF)
F-Q-1806-2

Sheet 1 of 1

Shield Data			
Model: 86010-330	Serial #: TP1200	Radionuclide: Co-60	Max. Capacity: 330 Ci
Shield P/N: 86001-330	Shield Heat #: C608-A06	Lot #: 0919100408	

Profile Process Data			
Source Model: 60011	Source Ser. #: 177476	Radionuclide: Co-60	Activity: 311.0 Ci
Survey Inst. 1: E600	Serial #: 1813	Date Cal.: 3/24/09	Date Due: 3/24/10
Inst. Probe: HP-270	Serial #: 00542	Capacity Correction Factor: 1.06	

Location	Measured Dose Rate mR/hr: At Surface	Surface Corr. Factor	At 30 Cm [Note 2]	At one Meter	Adjusted Dose Rate mR/hr: At Surface	At 30 Cm [Note 2]	At one Meter [Note 1]
Top	20	1.03	NA	.35	23	NA	.37
Right	50	1.06		.85	56		1.08
Front	35	1.06		.85	39		.90
Left	40	1.06		1.35	84		1.43
Rear	36	1.06		1.35	40		1.43
Bottom	27	1.09		.4	31		.42
Acceptance Criteria:					≤200	NA	≤ 1.05.0
Result: (Check one)			Accept		✓		Reject

Inspector: [signature] Date: 8/20/09 NCR #: _____

Comments:
1 meter Readings are less background of .05 mR/hr

Notes:
1. Refer to F-Q-1806-1, Shield Efficiency Testing Surface Correction Factors for an existing device model, or F-Q-1806-3, Shield Profile Worksheet for One meter acceptance limit.
2. The 30cm readings are only required when specifically requested.
3. Additional sheets may be used to describe results or indicate reading locations using sketches. Number all sheets and indicate total number of sheets. Make sure shield identification is included on each sheet.
4. Consult instrument calibration records for instrument uncertainty.

F-Q-1806-2, rev. 3 Page 1 of 1 9 March 2009

Post Test Profile Results

QSA GLOBAL

SHIELDING PROFILE AND INSPECTION FORM (SPIF)
F-Q-1806-2

Sheet 1 of 1

Shield Data			
Model: Sealy 330	Serial #: TP1200	Radionuclide: Co-60	Max. Capacity: 330 Ci
Shield P/N: 86001-330	Shield Heat #: C608-A06	Lot #: 0919100408	

Profile Process Data			
Source Model: 924-13	Source Ser. #: 277468	Radionuclide: Co-60	Activity: 177.1 Ci
Survey Inst. 1: E600	Serial #: 2750	Date Cal.: 4/10/10	Date Due: 4/10/11
Survey Inst. 2: NA	Serial #: NA	Date Cal.: NA	Date Due: NA
Inst. Probe: 1 HP270	Serial #: 706	Inst. Probe: 2 NA	Serial #: NA
Capacity Correction Factor: 1.75			

Location	Measured Dose Rate mR/hr: At Surface	Surface Corr. Factor	At 30 Cm [Note 2]	At One Meter	Adjusted Dose Rate mR/hr: At Surface	At 30 Cm [Note 3]	At One Meter [Note 1]
Top	11	1.09	1.3	.3	21	2.3	.5
Right	16	1.06	2.9	.5	30	4.2	.9
Front	28	1.06	5.0	.5	52	9.8	.9
Left	31	1.06	3.2	.6	56	5.6	1.1
Rear	15	1.06	2.7	.5	28	5.1	.9
Bottom	15	1.09	1.6	.3	29	2.8	.5
Acceptance Criteria:					≤200	NA	≤ 5.0
Result: (Check one)			Accept		✓		Reject

Inspector: [signature] Date: 7/26/10 NCR #: _____

Comments:
1 meter Readings less bottom base less background .10
Bottom Reading is less background .30

Notes:
1. Refer to F-Q-1806-1, Shield Efficiency Testing Surface Correction Factors for an existing device model, or F-Q-1806-3, Shield Profile Worksheet for One meter acceptance limit.
2. The 30cm readings are only required when specifically requested.
3. Additional sheets may be used to describe results or indicate reading locations using sketches. Number all sheets and indicate total number of sheets. Make sure shield identification is included on each sheet.
4. Attach auto profiler print out to this sheet if used.

F-Q-1806-2, rev. 4 Page 1 of 1 27 January 2010

Appendix B: Test Data Worksheets

See Attached.

Appendix C: Test Specimen Manufacturing Records

See Attached.

Appendix D: Test & Measurement Calibration Records

See Attached.

APPENDIX B: Test Data Worksheets

Test Specimen & Equipment List

Test Specimen & Equipment Documentation

Test Specimen

Configuration	Drawing Number	Serial Number	Attach IIR	Attach NCR	Attach Route Cards
SPECIAL	TP86000-330X	TP180 D			✓

Tools & Equipment

Tool Description	Enter the Model and Serial Number Mark NA when not used.	Attach Inspection Report or Calibration Certificate
Drop Surface, Drawing No. T10740	S/N 001	Yes
PUNCTURE BILLET, DWG T10143	S/N001	YES.
WEIGHT SCALE	#08080000300015	YES
THERMOMETER	ENG-20	YES
Record any additional tools used to facilitate the test and attach the appropriate inspection report or calibration certificates.		
SURVEY INSTRUMENT	E600 S/N 2750	YES
TORQUE WRENCH	5081099867	YES
Signature	**Print Name**	**Date**
Engineering: S. Grenier	STEVE GRENIER	13 JUL 10
Regulatory:	LORI PODOLAK	19 Jul 10
Quality Assurance:	Mark Ewen	19 Jul 10

Free Drop & Puncture Test Checklist

Test: 30-FOOT FREE DROP

Test Location: QSA GLOBAL BURLINGTON MA

Step	Data	
1. Record test specimen serial number:	TP180D	
2. Record the test specimen weight:	725 LBS.	
3. Record the ambient temperature (°C):	90°F / 32°C	Instrument S/N: ENG-20
4. Identify set-up orientation figure:	FIGURE 8.3.3 TEST PLAN 195	
5. Record drop height.	32.3 FEET	USED T10761-32.3 S/N: TP180D1
6. Photograph set-up in at least two perpendicular planes.	✓	
7. Begin video recording of the test so that impact is recorded.	✓	
8. Release the test specimen.	✓	
9. Stop the video recorder. Ensure the point of impact and orientation specified in the plan has been achieved.	✓	
10. Record the damage to the test specimen. Use a separate sheet and attach, if needed. RIB BOLTS (2) SHEARED OFF. RIB BENT. ACCESS PORT SLIGHTLY PUCKERED.		
11. Record location of simulated source, if possible. PRE-TEST = 6 INCHES , POST-TEST = 6 INCHES		
12. Engineering, Regulatory Affairs and Quality Assurance make a preliminary assessment relative to 10 CFR 71. Record the assessment on a separate sheet and attach. - TEST SPECIMEN MEETS THE 30-FOOT DROP TEST REQUIREMENTS OF 10 CFR 71.		

Test witnessed by (Signature)	Print Name	Date
Engineering: S. Grenier	STEVE GRENIER	13 JUL 2010
Regulatory Affairs: L. Pitcher	LORI PITCHER	19 Jul 10
Quality Assurance: Mark Ewen	MARK EWEN	19 Jul 10

Free Drop & Puncture Test Data Sheet

Test Specimen Serial No.: TP180D	Test: 30-FOOT FREE DROP
Test Date: 13 JUL 10	Test Time: 10:14 AM

Describe drop orientation and drop height:

ORIENTATION PER TEST PLAN. HIT SQUARELY ON REAR PLATE ACCESS PORT. TEST SPECIMEN DROPPED FROM 32.3 FEET.

Describe impact (location, rotation, etc.):

IMPACT ON RIM OF REAR ACCESS PORT + DUST COVER + RIBS.

TEST SPECIMEN BOUNCED OFF DROP PAD AFTER IMPACT.

Describe on-site inspection (damage, broken parts, etc.):

RIB BOLTS BROKEN (2) ON FLAT ENDPLATE. RIBS BENT AT IMPACT SPOT. ACCESS PORT SLIGHTLY PUCKERED INWARD. DUST COVER SCUFFED.

On-site test assessment:

- Was the test performed in accordance with 10 CFR 71, IAEA TS-R-1 1996, and this test plan? **Yes** or **No**.
- Does the test specimen meet the requirements of 10 CFR 71 and IAEA TS-R-1 1996 for this test? **Yes** or **No**.
- Any changes to subsequent drop orientations needed to achieve maximum damage? **Yes** or **No**. If yes, then identify and justify.
- Did sufficient damage occur at or on the rear-plate attachment area to warrant further drop testing the SENTRY 110 Projector – Basic configuration because of its thinner rear-plate? **Yes** or **No**.
- Should testing continue with this test specimen? **Yes** or **No**. If yes, next test: PUNCTURE TEST.
- Will the test specimen pass the thermal test based on the accumulated damage assessment? **Yes** or **No**

Engineering: S. Gomi 13Jul10 **Regulatory:** 19 Jul 10 **QA:** 21 Jul 10

Describe any post-test disassembly and inspection:

SEE PUNCTURE TEST DATA SHEET.

Describe any change in source position (if possible):

NO CHANGE IN SOURCE LOCATION MEASUREMENT.

Describe results of radiography (if performed):

NOT PERFORMED

Completed by: S. Gomi	Date: 13 JUL 2010

Free Drop & Puncture Test Data Sheet

Test Specimen Serial No.: TP180D	Test: PUNCTURE DROP
Test Date: 13 JUL 10	Test Time: 10:58 AM

Describe drop orientation and drop height:

ORIENTATION PER PLAN. HIT ON PLASTIC DUST COVER AT AN ANGLE.

TEST SPECIMEN DROPPED FROM 43 INCHES.

Describe impact (location, rotation, etc.):

IMPACT ON PLASTIC DUST COVER.
TEST SPECIMEN ROLLED OFF BILLET AFTER IMPACT.

Describe on-site inspection (damage, broken parts, etc.):

PLASTIC DUST COVER APPEARS PARTIALLY DETACHED FROM LOCK COVER (STAINLESS STEEL PORTION OF DUST COVER).

On-site test assessment:

- Was the test performed in accordance with 10 CFR 71, IAEA TS-R-1 1996, and this test plan? **Yes or No.**
- Does the test specimen meet the requirements of 10 CFR 71 and IAEA TS-R-1 1996 for this test? **Yes or No.**
- Any changes to subsequent drop orientations needed to achieve maximum damage? **Yes or No** If yes, then identify and justify.
- Did sufficient damage occur at or on the rear-plate attachment area to warrant further drop testing the SENTRY 110 Projector – Basic configuration because of its thinner rear-plate? **Yes or No**
- Should testing continue with this test specimen? **Yes or No** If yes, next test: _____
- Will the test specimen pass the thermal test based on the accumulated damage assessment? **Yes or No**

Engineering: S. Gerini 13 Jul 10 **Regulatory:** [illegible] 19 Jul 10 **QA:** [illegible] 21 Jul 10

Describe any post-test disassembly and inspection:

Describe any change in source position (if possible):

NO CHANGE IN SOURCE LOCATION MEASUREMENT.

Describe results of radiography (if performed):

NOT PERFORMED.

Completed by: S. Gerini	Date: 13 JUL 10

Test Inspection Data Sheet

Test Specimen Serial No.: TP180D	Last Test Performed: PUNCTURE TEST

Describe and measure (if appropriate) any damage, signs of permanent strain, deformation and/or broken parts.

- TWO BROKEN RIB ATTACHMENT BOLTS ON BOTTOM SIDE OF PACKAGE.
- ONE BROKEN LOAD PIN ON RIB ASSEMBLY AT REAR ACCESS PORT SIDE.
- RIBS (2) BENT BACK ABOUT 1" INCH FROM IMPACT DIRECTION - REAR PORT SIDE.
- PLASTIC PORTION OF DUST COVER DENTED BY BILLET - OPPOSITE PLUNGER LOCK.
- LOCK COVER SLIPPED IN SHEAR ACCROSS SELECTOR RING RETAINER FACE.
- PLUNGER LOCK PIN, BOTH LOCK COVER PINS, AND SOURCE CONNECTOR SHEARED OFF.
- ACCESS PORT PUCKERED IN TOWARDS CENTER ABOUT ¼ INCH AT PROTRUDING SIDE OF PORT TUBE.

Describe the condition of the simulated source wire assembly.

SIMULATED SOURCE WIRE SECURE AND SHIELDED. CAPSULE + WIRE NOT AFFECTED. SOURCE CONNECTOR SLICED IN SHEAR AT BARREL END BUT BALL END COMPLETELY SECURE IN LOCK ASSEMBLY.

Reassemble the package using a representative active source, making sure that the source position and the package configuration is the same as they were immediately after the last test.

Measure and record a radiation profile of each test specimen in accordance with QSA Global Work Instruction WI-Q-1806.

Compare the pre-test dose levels with post-test dose levels at the surface of the package and at 1 meter from the surface of the package.

ESSENTIALLY NO CHANGE BETWEEN PRE AND POST TEST DOSE LEVELS ON SURFACE OR 1-METER FROM PACKAGE.

Is a radiograph required to inspect for hidden component damage or failure? If radiography is performed, describe any damage or failures found.

NOT PERFORMED.

Completed by: S. Gianni	Date: 16 JUL 10

QSA GLOBAL

SHIELDING PROFILE AND INSPECTION FORM (SPIF) F-Q-1806-2

Sheet 1 of 1

Shield Data

Model: Sentry 330	Serial # TP180D	Radionuclide: Co-60	Max. Capacity 330 Ci
Shield P/N: 86001-330	Shield Heat # C608-A06		Lot # 0919100408

Profile Process Data

Source Model: 424-13	Source Ser. # 27746B	Radionuclide: Co-60	Activity: 188.1 Ci
Survey Inst. 1 E600	Serial # 2750	Date Cal. 4/10/10	Date Due: 4/10/11
Survey Inst. 2 NA	Serial # NA	Date Cal. NA	Date Due: NA
Inst. Probe: 1 HB270	Serial # 706	Inst. Probe: 2 NA	Serial # NA
Capacity Correction Factor: 1.75			

	Measured Dose Rate mR/hr				Adjusted Dose Rate mR/hr		
Location	At Surface	Surface Corr. Factor	At 30 Cm [Note 2]	At One Meter	At Surface	At 30 Cm [Note 2]	At One Meter [Note 1]
Top	11	1.09	1.3	.3	21	2.3	.5
Right	16	1.06	2.4	.5	30	4.2	.9
Front	28	1.06	5.0	.5	52	8.8	.9
Left	31	1.06	3.2	.6	56	5.6	1.1
Rear	15	1.06	2.9	.5	28	5.1	.9
Bottom	15	1.09	1.6	.3	29	2.8	.5
				Acceptance Criteria:	≤200	NA	≤ 5.0
				Result: (Check one) Accept	✓	Reject	

Inspector: [signature] Date: 7/16/10 NCR # _____

Comments:
1 meter Readings less bottom bare less background .10
Bottom Reading is less background .30

Notes:

1. Refer to F-Q-1806-1, Shield Efficiency Testing Surface Correction Factors for an existing device model, or F-Q-1806-3, Shield Profile Worksheet forOne meter acceptance limit.
2. The 30cm readings are only required when specifically requested.
3. Additional sheets may be used to describe results or indicate reading locations using sketches. Number all sheets and indicate total number of sheets. Make sure shield Identification is included on each sheet.
4. Attach auto profiler print out to this sheet if used.

APPENDIX C: Test Specimen Manufacturing Records

Free Drop & Puncture Test Checklist

Test: 1 METER PUNCTURE DROP TEST.		
Test Location: QSA GLOBAL BURLINGTON MA		
Step	**Data**	
1. Record test specimen serial number:	T8180D	
2. Record the test specimen weight:	725 LBS.	
3. Record the ambient temperature (°C):	91°F / 33°C	Instrument S/N: ENG-20
4. Identify set-up orientation figure:	FIGURE 8.4.1 TEST PLAN 195	
5. Record drop height.	43 INCHES	
6. Photograph set-up in at least two perpendicular planes. ✓		
7. Begin video recording of the test so that impact is recorded. ✓		
8. Release the test specimen. ✓		
9. Stop the video recorder. Ensure the point of impact and orientation specified in the plan has been achieved. ✓		
10. Record the damage to the test specimen. Use a separate sheet and attach, if needed. DENT IN PLASTIC COVER. COVER (PLASTIC PORTION) PARTIALLY PULLED OUT OF PORT.		
11. Record location of simulated source, if possible. PRE-TEST = 6 INCHES, POST-TEST = 6 INCHES.		
12. Engineering, Regulatory Affairs and Quality Assurance make a preliminary assessment relative to 10 CFR 71. Record the assessment on a separate sheet and attach. - TEST SPECIMEN MEET THE PUNCTURE TEST REQUIREMENTS OF 10 CFR 71.		
Test witnessed by (Signature)	**Print Name**	**Date**
Engineering: S. Grenier	STEVE GRENIER	13 JUL 2010
Regulatory Affairs: L. Podolak	Lucy Podolak	19 Jul 10
Quality Assurance: [illegible]	Mark Ewen	19 Jul 10

QSA GLOBAL	TMI ROUTE CARD	Part No.: TP86000-330X	Rev: E	Page 1 of 1
		Desc: TEST SPECIMEN – SENTRY 330 Special		
		By: S. Gamin 22Sep09	Ckd: 22Sep09	
		Safety Class: A	WO INDIRECT	Qty:
FORM E-3161-1, rev 0		Serial/Lot Number(s): TP180D		

TEMPORARY MANUFACTURING INSTRUCTIONS
TMI # 199

APPROVALS
QUALITY ASSURANCE DATE 24Sep009
ENGINEERING S. Gamin DATE 22Sep09
MANUFACTURING DATE 25Sep09
REGULATORY DATE 24 Sep09

SCOPE: Produce SENTRY 330 Special test unit (without plastic rib inserts).

Op #	Work Center	Operation	Part #	Lot or S/N	Reference Documents	Tools	by	Date	Comments
010	ASSY	Assemble	86015-330 BLT015	SN TP180D LOT 09246000008	TP86000-330X			June-10	
020	ASSY with QC	Torque Rib Bolts			TP86000-330X	Torque Wrench S/N 508	1099	June-10 867	QC to Witness torque. QC Initial & Date 6/30/10
030	QC or ASSY	Record Weight			TP86000-330X			6/30/10	725.5 lbs #08090000000015 — weight scale S/N
040	QC	Inspect			TP86000-330X			7/1/10	

QSA GLOBAL	TMI ROUTE CARD	Part No.: TP86015-330	Rev: C	Page 1 of 2
		Desc: TEST SPECIMEN – SENTRY 330 Basic		
		By: S. Gemi 19 Aug-09	Ckd: [illegible] 19 Aug 09	
		Safety Class: A	WO INDIRECT	Qty: 1
FORM E-3161-1, rev 0		Serial/Lot Number(s): TP180D		

TEMPORARY MANUFACTURING INSTRUCTIONS
TMI # 189

APPROVALS

QUALITY ASSURANCE [illegible] DATE 20 Aug 09
ENGINEERING S. Gemi DATE 19 Aug-09
MANUFACTURING [illegible] DATE 20 Aug 09
REGULATORY [illegible] DATE 19 Aug 09

SCOPE: Produce SENTRY 330 Test Specimen without Ribs.

Op #	Work Center	Operation	Part #	Lot or S/N	Reference Documents	Tools	by	Date	Comments
010	ASSY	Weigh assembly without foam	86010-330	S/N TP180D		Scale S/N F/6 383	[illegible]	31 Aug-09	Weight = 615 lbs
020	ASSY	Fill assembly with foam	FOM002		TP86015-330	T10714 Scale S/N SCL 700 DX	[illegible]	31 Aug-09	
030	ASSY	Weigh assembly with foam				Scale S/N F/6 383	[illegible]	31 Aug-09	Weight = 651 lbs
040	ASSY	Install set screws	SCR312 GLU002		TP86015-330		[illegible]	1 Sept-09	
050	ASSY	Attach rear plate and dust cover assemblies	86020-330 86025 BLT015 SCR154 GRE003	S/N TP180D LOT#0908600108 LOT#0833800303	TP86015-330		[illegible]	1 Sept-09	

Weight with foaming Hardware Installed [illegible] 31-Aug-09

QSA GLOBAL	TMI ROUTE CARD	Part No.: TP86015-330	Rev: C	Page 2 of 2
		Desc: TEST SPECIMEN – SENTRY 330 Basic		
		By: S. Gomi 19Aug09	Ckd: D. Ill 19Aug09	
		Safety Class: A	WO INDIRECT	Qty: 1
FORM E-3161-1, rev 0		Serial/Lot Number(s): TP180D		

TEMPORARY MANUFACTURING INSTRUCTIONS

TMI # 189

APPROVALS

QUALITY ASSURANCE G. Bouchard DATE 20Aug09

ENGINEERING S. Gomi DATE 19Aug09

MANUFACTURING R W Evans DATE 20Aug09

REGULATORY R. Roth DATE 19Aug09

SCOPE: Produce SENTRY 330 Test Specimen without Ribs.

Op #	Work Center	Operation	Part #	Lot or S/N	Reference Documents	Tools	by	Date	Comments
060	ASSY	Attach front plate assembly	86030 86039 BLT015 SCR154 GRE003	LOT#0908600108 LOT#0833800303	TP86015-330			1 Sept 09	
070	ASSY with QC	Torque Bolts	BLT015		TP86015-330	Torque Wrench S/N 50906 49690		3 Sept 09	QC to witness torque. QC initial & date 9/3/09
080	ASSY with QC	Torque Screws	SCR154		TP86015-330	Torque Wrench S/N 171		3 Sept 09	QC to witness torque. QC initial & date 9/3/09
090	ASSY	Attach Bracket & Mark Weld Seam	86042 WSH047 SCR210 GLU002		TP86015-330			1 Sept 09	
100	QC	Inspect, perform functional test & record total weight			TP86015-330	Scale S/N 146325		9/3/09	Weight = 657 lbs

QSA GLOBAL

ROUTE CARD

Part Number:	86010-330	Part Rev:	E	Safety Class:	A	Page 1 of 2
Part Name:	Welded Body Assembly – Sentry 330	Production Control:	J. DROUETTE 13 AUG 09		
Engineering:	S. Gu 13 AUG 09	Regulatory:	13 AUG 09		
Production Mgt.	KW Ewanuk 13 Aug 09	Qty:	1	Work Order:	INDIRECT
QA	JS Beauchamp 13 Aug 09	Serial/Lot Number(s):	TP180D		

Op #	Work Center	Operation	Part #	Lot or S/N	Reference Documents	Tools	by	Date	Hours	Comments
010	ASSY	Assemble parts	86001-330 86003 86004 86005 86006 86008 86011 86012 86013 PIN050 RIV102	Lot#0912100403 Heat#C608 A06 Lot#0910700501 Lot#0832000001	86010-330	Heat # C608-A06		6 Aug-09		Attach (2) T10714-1 Shield wgt = 460 ugs
								6 Aug 09		
020	QC	Inspect assembly			86010-330	void		6 Aug-09		
030	WELD	Tack weld	WEL001	Lot#0636200001	86010-330			6 Aug-09		Use welded rib assemblies (86041) to locate rivnuts and endplates
040	ASSY	Etch or stamp "P330" and S/N		S/N TP108D	86010-330			6 Aug-09		Etch or stamp P330 and S/N between tapped holes on endplate
050	QC	Profile inspect			T10713-330			8/25/09		Temporarily remove T10714-1. Replace after profile.

QSA GLOBAL

ROUTE CARD

Part Number:	86010-330	Part Rev:	E	Safety Class:	A	Page 2 of 2
Part Name:	Welded Body Assembly – Sentry 330	Production Control:	J. DROLETTE 13 AUG 09			
Engineering:	S. Gu 13 AUG 09	Regulatory:	L. Ruth 13 Aug 09			
Production Mgt.	RW Evans 18 Aug 09	Qty:	1	Work Order:	INDIRECT	
QA	[illegible] 18 Aug 09	Serial/Lot Number(s):	TP180D			

Op #	Work Center	Operation	Part #	Lot or S/N	Reference Documents	Tools	by	Date	Hours	Comments
060	WELD	Finish weld	WEL001 WEL002	Lot#0636200001 Lot#0828300002	86010-330		[illegible]	25 Aug-09		
070	ASSY	Scotch brite rub (matte finish) & apply sealant	GLU025		86010-330		[illegible]	25 Aug-09		Seal DU shield around both ends
080	QC	Inspect			86010-330		[illegible]	8/26/09		

QSA GLOBAL

SHIELDING PROFILE AND INSPECTION FORM (SPIF) F-Q-1806-2

Sheet 1 of 1

Shield Data

Model: 86010-330	Serial # TP180D	Radionuclide: Co-60	Max. Capacity 330 Ci
Shield P/N: 86001-330	Shield Heat # C608-A06		Lot # 0919100408

Profile Process Data

Source Model: 60011	Source Ser. # 277478	Radionuclide: Co-60	Activity: 311.0 Ci
Survey Inst. E600	Serial # 1863	Date Cal. 2/24/08	Date Due: 2/24/10
Inst. Probe: HP-270	Serial # 00542	Capacity Correction Factor: 1.06	

	Measured Dose Rate mR/hr				Adjusted Dose Rate mR/hr		
Location	At Surface	Surface Corr. Factor	At 30 Cm [Note 2]	At one Meter	At Surface	At 30 Cm [Note 2]	At one Meter [Note 1]
Top	20	1.09	NA	.35	23	NA	.37
Right	50	1.06		.95	56		1.00
Front	35	1.06		.85	39		.90
Left	40	1.06		1.35	844		1.43
Rear	36	1.06		1.35	40		1.43
Bottom	27	1.09		.4	31		.42
				Acceptance Criteria:	≤ 200	NA	≤ 105.0
				Result: (Check one) Accept	✓	Reject	8/29/09

Inspector: [signature] Date: 8/20/09 NCR # _____

Comments:

1 meter Readings are less background of .05 mR/hr

Notes:

1. Refer to F-Q-1806-1, Shield Efficiency Testing Surface Correction Factors for an existing device model, or F-Q-1806-3, Shield Profile Worksheet forOne meter acceptance limit
2. The 30cm readings are only required when specifically requested.
3. Additional sheets may be used to describe results or indicate reading locations using sketches. Number all sheets and indicate total number of sheets. Make sure shield Identification is included on each sheet.
4. Consult instrument calibrationrecords for instrument uncertainty.

APPENDIX D: Test & Measurement Calibration Records

QSA GLOBAL

Inspection Instruction And Record	Originator/Date Tom Shea 14 Aug 09	Rev. B	Part No. T10740	Reg. Approval/Date C. Keyfen 20 Aug 09
	QA Approval/Date: [illegible] 21 Aug 09	CM. NA	PIL NA	Eng. Approval/Date TSR 14 AUG 09

Item Description: 8 X 8 DROP PAD-BURLINGTON

Characteristics	Tolerance	MTE	AQL	1	2	3	4	5	6	7	8	9
General Visual	NA	Visual	C/100%	~~0~~ / 1	REF / 150568							
Cracks In Concrete	NA	Note & Photograph	C/100%	~~0~~ / 1	N/A							
1/2-13 threaded hole, four (4) places	Go/NoGo	Thread Gage	C/100%	1 / ~~0~~	0 / 1							
Pitch of Slab 1/2, N-S Corners	+/-1/4	Level & Scale	C/100%	~~0~~ / 1	N/A							
Surface Condition of Steel Plate	NA	Note & Photograph	C/100%	~~0~~ / 1	N/A							

Comments:		1	2	3	4	5	6	7	8	9
	PO / WO #	N/A	N/A							
Calibration: Re-Inspect Prior to use. Inspection to be valid 60 days only !	Traveler	~~N/A~~	~~N/A~~							
	Lot / Serial #	001	001							
	Lot Qty.	1	1							
	Qty. Rej / NCR	RWK / 150568	0 / N/A							
	Qty. Acc.	0	1							
F-Q1807-1, rev. 2	Insp / Date	JU / 25AUG09	MD / 3SEPT 09							

PERIODIC MAINTENANCE

Inspection Instruction And Record	Originator/Date 18 SEP 01	Rev C	Part No. T10143	Supplier ENGINEERING
	QA Approval/Date 18 Sept 01	CM NA	PIL NA	Eng. Approval/Date 19 SEPT 01

Item Description: Puncture Test Billet

Characteristics	Tolerance	MTE	AQL	1	2	3	4	5	6	7	8	9
General Visual	N/A	N/A	C / 100%	1	1	1						
Securely Mounts to Drop Test Pad	N/A	N/A	C / 100%	1	1	1						

Comments												
	Due Date			19 Sept 02	07 JULY 2010	13 JUL 2011						
	Freq / Days			365 Days	365 DAYS	365 DAYS						
	Serial #			01	01	01						
	Lot Qty.			1	1	1						
	Qty. Rej / NCR			NA	NA	NA						
	Qty. Acc.			1	1	1						
	Insp / Date			19 Sept 01	JU 07JUL09	JU 13JUL10						

S/N: 080900000015

American Calibration & Testing Co., Inc.

34 Forest Park Ave. N. Billerica, MA 01862-1333 (978) 670-2361 Fax (978) 671-6423

Calibration Report

Date of Verification: Friday September 25, 2009

Location

QSA Global, Inc.

40 North Avenue
Burlington, MA 01803

Environmental Conditions @ Time of Service

Temperature: 70 ± 2 °F Relative Humidity: 40% ± 15%

Instrument Data

Report #:	090923-S1				
MFG:	Salter/Brecknell	**Instr. s/n:**	080900000015	**Condition:**	Good
Model:	PS1000	**Capacity:**	1,000 lb	**Loc./Dept:**	QC
Type:	Platform Scale	**Verified Range:**	10 - 800 lb		
Tol:	0.2% of Reading				

As Found and Final Run Data

Verification Reading lb	Instrument Reading Run 1 lb	Instrument Reading Run 2 lb	Instrument Reading Average	Instrument Error lb	Repeatability lb	Resolution lb	Instrument Error %	V.D Code
0.0	0.0	0.0	0.0	0.00	0.00	0.5	0.000	2,3,4
10.0	10.0	10.0	10.0	0.00	0.00	"	0.000	"
100.0	100.0	100.0	100.0	0.00	0.00	"	0.000	"
200.0	200.0	200.0	200.0	0.00	0.00	"	0.000	"
400.0	399.5	399.5	399.5	- 0.50	0.00	"	- 0.125	"
600.0	599.0	599.0	599.0	- 1.00	0.00	"	- 0.167	"
800.0	798.5	798.5	798.5	- 1.50	0.00		- 0.188	

Comment:

As found Instrument Status	Within mfg. Tolerance ☒	Out of mfg. Tolerance ☐	Needs Adjustment ☐
Instrument final run Status	Within mfg. Tolerance ☒	Out of mfg. Tolerance ☐	Needs Adjustment ☐

National Institute of Standards & Technology Traceability Data

VD Code	
1	Troemner, Inc. Dead Weights s/n 20472 Calibration Date 7/15/2009 Traceability No. 204604
2	Toledo, Inc. Dead Weights s/n 123 Calibration Date 7/16/2009 Traceability No. 205441
3	Amcal, Inc. Dead Weights s/n A1070 Calibration Date 7/16/2009 Traceability No. 205442
4	Troemner, Inc. Dead Weights s/n 501-8 Calibration Date 7/16/2009 Traceability No. 205442

Calibration Data

Previous Cal. Date: New
Cal. Frequency: Annual
Cal. Due Date: 9/25/2010
Method Used: Dead Weight Standards

Calibrated By: G. W. Mooney

The above system (Instrument, Load Cell, Integral Software and Output Device(s), and accessories has been calibrated in accordance with handbook H 44 Standard Practices for Verification of Weighing Devices using apparatus and standards which are traceable to NIST (National Institute of Standards and Technology). The information provided on this form complies with the data gathering and reporting requirements of ISO/IEC 17025 and ANSI/ASQC Z540-1. Calibration Procedures used provide measurement uncertainty ratios of greater than or equal to 4:1 of the specification of the unit under test, with a coverage factor of k=2 at a confidence level of 95%, unless otherwise noted.

This report cannot be reproduced without written permission from American Calibration & Testing Co., Inc.

JM

S/N: T-198776

ESSCO CALIBRATION LABORATORY

DIVISION OF WALSH ENGINEERING SERVICES, INC.

CALIBRATION/REPAIR OF ALL TYPES OF ELECTRONIC / MECHANICAL TEST EQUIPMENT

27 INDUSTRIAL AVE, CHELMSFORD, MA 01824-4102

TEL: (800) 325-2201 (978) 250-0880 www.esscolab.com

ISSUE DATE: 2/22/2010

CERTIFICATE OF CALIBRATION

Certificate #: 296477

BARCODE: 1030907

CUSTOMER / LOCATION	EQUIPMENT INFORMATION
QSA GLOBAL INC 40 NORTH AVENUE BURLINGTON MA 01803	MANUFACTURER: OMEGA MODEL NO: CL23A SERIAL NO: T-198776
DEPT:	CONTROL NO: ENG-20
PURCHASE ORDER: P32150	TYPE: CALIBRATOR

CONDITION RECEIVED	CONDITION RETURNED
IN TOLERANCE	IN TOLERANCE

METHOD / ENVIRONMENT	
PERFORMED:	IN LAB
TEMPERATURE (deg C):	23
RELATIVE HUMIDITY (%RH):	21
METHOD:	OMEGA CL23A/24/25/26

CALIBRATION	
CALIBRATION DATE:	2/22/2010
CALIBRATION DUE:	2/22/2011
METROLOGIST:	Joseph D. Freedman

Standards Used To Calibrate Equipment

ID	Description	Record No.	Last Cal. Date	Cal. Due Date
E1540	KAYE K140-4 ICE POINT REFERENCE	178302	5/15/2009	5/14/2010
E2483	FLUKE 8508A REFERENCE MULTIMETER	257701	5/27/2009	4/27/2010
E706	FLUKE 5700A\03 CALIBRATOR	276832	1/7/2010	4/7/2010

JL

The ESSCO Quality System is certified to ISO 9001:2008

The results above relate only to the item(s) calibrated. Unless otherwise stated, a minimum TUR of 4:1 was used.

This certifies that the unit conformed to applicable specifications upon successful completion of the calibration. The standards used are traceable to NIST or a National Measurement Institute. This certificate shall not be reproduced, except in full, without written approval of ESSCO.

The signature to the right signifies responsibility for the quality system.

This calibration was performed in compliance with the ESSCO Quality Manual, ECL 1, Rev. 26, 29 September 2009, and complies with ISO 9001:2008, ANSI/NCSL Z540-1, QS9000 (exp), MIL-STD-45662A (exp), ISO 10012:2003, 10CFR21, and the calibration requirements of ISO 13485.

Kevin R. Pistey
Quality Assurance Manager

Internal Use Only: 2/16/2010 2/23/2010 DATA MDY A1583 ESSCO VAN 27815

ENG-20

Certificate #: **296477**

BARCODE: 1030907

Test Points

Step	Function Tested	Nominal	Tolerance	Units	As Found	As Left	Tolerance
1	1 MTR IN K 0.000 mV	32.0	32.5 31.5	DEG F	31.9	31.9	+/- 0.5 DEG F
2	2 MTR IN K 54.856 mV	2500.0	2502.0 2498.0	DEG F	2500.4	2500.4	+/- 2.0 DEG F
3	3 MTR IN J 0.000 mV	32.0	32.5 31.5	DEG F	31.7	31.7	+/- 0.5 DEG F
4	4 MTR IN T 0.000 mV	32.0	32.5 31.5	DEG F	31.7	31.7	+/- 0.5 DEG F
5	5 CAL OUT K 32.0 F	0.000	0.011 -0.011	mV	0.008	0.008	+/- 0.011 mV
6	6 CAL OUT K 2500.0F	54.856	54.894 54.816	mV	54.867	54.867	+/- 0.038 mV
7	7 CAL OUT J 32.0 F	0.000	0.014 -0.014	mV	0.012	0.012	+/- 0.014 mV
8	8 CAL OUT T 32.0 F	0.000	0.011 -0.011	mV	0.007	0.007	+/- 0.011 mV

End of Data

Note: A = Adjusted F = Failed L = Limited

Customer: QSA GLOBAL P.O. No.: P31995

Date Cal: 02/23/10
Date Due: 02/23/11

ID.No.: 5.09/5.10 Manufacturer: VERMONT GAGE
2 ID.No.: Serial No.: Technician: PR
Department: Model No.: Cal. Proc. No: 21
Deviation u.: Standard No.: 028 Cal.: 08/28/09 Due: 02/28/10
Accuracy: GO +0.00001" Standard No.: 071 Cal.: 08/28/09 Due: 02/28/10
Accuracy: NG -0.00001" Standard No.: Cal.: Due:
Standard No.: Cal.: Due:

Temperature: 69.9°
Humidity: 24%
Gage Type: PLAIN PLUG

	GO	NO GO
Required:	5.09mm (0.20039")	5.10mm (0.20079")
Deviation:	+0.00001"	0.00000"
Measured:	0.20040"	0.20079"

Customer: QSA GLOBAL P.O. No.: P31995

Date Cal: 02/03/10
Date Due: 02/03/11

ID.No.: 501 Manufacturer: VERMONT GAGE
2 ID.No.: Serial No.: Technician: PR
Department: Model No.: Cal. Proc. No: 15
Deviation u.: Standard No.: 036 Cal.: 08/26/09 Due: 02/28/10
Accuracy: GO -0.00020" Standard No.: Cal.: Due:
Accuracy: NG +0.00020" Standard No.: Cal.: Due:
Standard No.: Cal.: Due:

Temperature: 69.2°
Humidity: 23%
Gage Type: M5 X 0.8-6G THREAD RING SET

	GO	NO GO
Required:	4.458mm	4.361mm
Deviation:	0	0
Measured:	SET PLUG PASSES	SET PLUG PASSES

Customer: QSA GLOBAL P.O. No.: P31995

Date Cal: 02/04/10
Date Due: 02/04/11

ID.No.: 5081099867 Manufacturer: CRAFTSMAN
2 ID.No.: Serial No.: 5081099867 Technician: PR
Department: Model No.: 944594 Cal. Proc. No: 23
Deviation u.: Standard No.: 158 Cal.: 07/03/09 Due: 07/03/10
Accuracy: +/-4% Standard No.: 160 Cal.: 07/03/09 Due: 07/03/10
Accuracy: Standard No.: Cal.: Due:
Standard No.: Cal.: Due:

Temperature: 70.3°
Humidity: 22%
Gage Type: 10-75 ft/lb TORQUE WRENCH

Required:	15.0	30.0	45.0	60.0	75.0
Deviation:	15.76	30.36	45.70	61.22	76.30
Measured:	15.37	30.81	46.42	62.11	77.46

EBERLINE E-600 CALIBRATION REPORT - V4.03 04/10/10 ~~15:49:04~~

E-600 Serial Number	: 2750
Program Version	: E600 V4.02
Calibration Date/Due Date	: 04/07/10 to 04/07/11
Scaler Precision	: 10%
Lower Threshold Cal. Points	: 2.10 mV and 6.00 mV
Upper Threshold Cal. Points	: 6.00 mV and 60.0 mV
Lower Threshold Slope	: 0.8571
Lower Threshold Intercept	: -0.0952 mV
Lower Threshold Span	: 0.1111 mV (<=0.5) to 5.10 mV (>=5.0)
Upper Threshold Slope	: 0.9667
Upper Threshold Intercept	: -0.6667 mV
Upper Threshold Span	: 0.6897 mV (<=1.5) to 60.0 mV (>=50.0)
Alarm Editing	: Enabled
Latching Alarms	: Enabled
Auto Ranging	: Enabled
Beep on Auto-Range	: No
Ignore E-600 Cal. Date	: No
Ignore Probe Cal. Date	: No
Ratemeter Mode Support	: Enabled
Integrate Mode Support	: Enabled
Scaler Mode Support	: Enabled
Peak Hold Mode Support	: Enabled
Background Update Mode Support	: Enabled
Log ID Source	: Internal/Aux.
Star Key Ratemeter Function	: Zero Display
Star Key Integrate Function	: Zero Display
Scaler Display Units	: Rate
Scaler Counting Mode	: Fixed Time
Smart Probe Serial Number	: 706
Type	: SHP270
Calibration Date/Due Date	: 04/10/10 to 04/10/11
Dead Time	: 113 usec
Surface Area	: 3.00 cm2
Max High Voltage	: 900 Vdc
Overrange	: 60000 cps
Channel 1	
Channel Type	: Gamma
Rate Units	: R/hr
Response Times	: 30,15,5 secs
High Voltage	: 898 Vdc
Lower Threshold	: 5.00 mV
Upper Threshold	: 10.1 mV
Selected Window	: Upper
Upper Cal. Constant	: 7.86E+07 counts/R
Scaler Time	: 30 secs
Lower to Upper Crossover	: 0.0160
Upper to Lower Crossover	: 0.0

New probe internals
3/10/10

Gamma Channel Linearity Test Results - Pass Tolerance Plus/Minus 10.0%

Field	Response	%Error	Pass/Fail
0.0050 R/hr	0.0050 R/hr	0.9049%	Pass
0.0500 R/hr	0.0474 R/hr	-5.22%	Pass
0.5000 R/hr	0.5041 R/hr	0.8140%	Pass
1.50 R/hr	1.61 R/hr	7.22%	Pass
2.00 R/hr	2.14 R/hr	7.07%	Pass

Cable Length: 39 inches

OK for Profile

Signature: [signature] Date: 4/10/10

[signature] RSO 4/12/10

QSA GLOBAL	TMI ROUTE CARD	Part No.: T10761-XX	Rev: A	Page 1 of 2
		Desc: Drop Height Indicators		
		By: S Gr 26Feb10	Ckd: 26Feb10	
		Safety Class: NA	WO	Qty: 2
FORM E-3161-1, rev 0		Serial/Lot Number(s): TP180D1, TP180D2		

TEMPORARY MANUFACTURING INSTRUCTIONS
TMI #___344____

APPROVALS

QUALITY ASSURANCE _____ DATE 1 Mar. 2010
ENGINEERING _____ DATE 26Feb10
MANUFACTURING _____ DATE 1MAR10
REGULATORY _____ DATE 26Feb10

SCOPE: Build 2 drop height indicators for ~~every drop in~~ test plan ~~180~~ 195 hypothetical accident conditions drop tests ~~(20 total)~~. 13Jul10

Op #	Work Center	Operation	Part #	Lot or S/N	Reference Documents	Tools	by	Date	Comments
010	ENG	13Jul10 Build ~~18~~ drop height indicators for the 30+ foot drop test	T10761-32.3 T10761- T10761- T10761- T10761- T10761- T10761- T10761- T10761- T10761-	S/N TP180D1 S/N S/N S/N S/N S/N S/N S/N S/N S/N	T10761-XX		13Jul10	13Jul10	Use the adjusted drop heights "XX" from the approved worksheet.

QSA GLOBAL	TMI ROUTE CARD	Part No.: T10761-XX	Rev: A	Page 2 of 2
		Desc: Drop Height Indicators		
		By: 26 Feb 10	Ckd: 26 Feb 10	
		Safety Class: NA	WO	Qty: 2
FORM E-3161-1, rev 0		Serial/Lot Number(s): TP180D1, TP180D2		

TEMPORARY MANUFACTURING INSTRUCTIONS
TMI #___344____

APPROVALS

QUALITY ASSURANCE _____ DATE 1 March 2010
ENGINEERING _____ DATE 26 Feb 10
MANUFACTURING _____ DATE 1 Mar 10
REGULATORY _____ DATE 1 Mar 10

SCOPE: Build 2 drop height indicators for ~~every drop in~~ test plan ~~180~~ 195 hypothetical accident conditions drop tests ~~(20 total)~~. SD 13 Jul 10

Op #	Work Center	Operation	Part #	Lot or S/N	Reference Documents	Tools	by	Date	Comments
020	ENG	SD 13 Jul 10 Build 1~~0~~ drop height indicators for the puncture 40 inch drop test	T10761-43 IN T10761- T10761- T10761- T10761- T10761- T10761- T10761- T10761- T10761-	S/N TP180D2 S/N S/N S/N S/N S/N S/N S/N S/N S/N	T10761-XX		SD	13 Jul 10	Use the adjusted drop heights "XX" from the approved worksheet.
030	QC	Inspect per drawing			T10761-XX		JM	13 Jul 10	

Section 3 - THERMAL EVALUATION

3.1 Description of Thermal Design

The Models Sentry 110, Sentry 330 and 867 Transport Packages are a completely passive thermal device having no mechanical cooling system or relief valves. All cooling of the transport package is through free convection and radiation. The maximum heat source is 330 Curies of ^{60}Cobalt. The corresponding decay heat generation rate is approximately 5.5 Watts (See Section 2.6.1, "Heat").

3.1.1 Design Features

The Models Sentry 110, Sentry 330 and 867 Transport Packages are described in Section 1. Components important to safety and materials used in their construction are shown in Table 3.1a. All components important to safety are designed to retain sufficient mechanical and thermal properties at and within the temperature range of -40°C to +800°C. See Table 3.2b.

The package contents consist of ^{60}Cobalt encapsulated within a welded capsule. The source capsule, located at the center of the shield and welded body, is crimped onto a flexible wire assembly secured in the shielded position by the lock assembly. The lock plate assembly is attached by four bolts to the welded package body.

The large mass of the depleted uranium shield provides a substantial heat sink for decay heat dissipation through the source tube. The heat absorbed in the shield is conducted out to the exterior surfaces of the welded body primarily at the top and bottom inner contact surfaces of the package. Heat is also conducted out to the sides of the package through the shield pin connections at the access ports of the body. Polyurethane foam surrounds and partially insulates the shield within the body. The foam acts as a thermal and oxidizing barrier during high temperature conditions like the hypothetical accident fire test. The large surface area of the welded body exterior enables heat to be transferred to the external environment by radiant and convective means.

3.1.2 Decay Heat of Contents

From Table 2.6a, a maximum of 5.5 Watts of decay energy is available to be absorbed by the package.

3.1.3 Summary Tables of Temperatures

Table 3.1a: Summary Table of Temperatures

Surface Temperature Condition	Model Sentry 110, Sentry 330 & 867 Packages	Comments
Insolation (38°C in full sun)	70.7°C (159°F)	Section 3.4.1.1
Decay Heating (38°C in shade)	40°C (104°F)	Section 3.4.1.2
Fire Test During	800°C (1,472°F)	
Post-Fire (Maximum Temperature)	800°C (1,472°F)	

3.1.4 Summary Tables of Maximum Pressures

The Models Sentry 110, Sentry 330 and 867 containers are vented to atmosphere. As such, no pressure will build up in the units under either Normal or Hypothetical Accident conditions.

Table 3.1b: Summary Table of Maximum Pressures

Void Volume IN^3	Normal Conditions 88°C (190°F) Pressure Developed	Fire Conditions 800°C (1,472°F) Pressure Developed	Comments
0	0 psig	0 psig	

3.2 Material Properties and Component Specifications

3.2.1 Material Properties

Table 3.2a: Materials of Components Important to Safety

Component	Material	Alloy	Comments
Shield	Depleted Uranium	U-0.75% Ti	
Welded Body	Stainless Steel	304/304L	
Lock Plate	Stainless Steel	304/304L	
Selector Ring Retainer	Stainless Steel	304/304L	
Source Wire	Stainless Steel	304/304L	
Source Capsule	Stainless Steel	304L/316L	
Source Connector	Stainless Steel	17-4 PH	Condition H925
Lock Slide	Stainless Steel	17-4 PH	Condition H925
Lock Plate Bolts	Stainless Steel	17-4 PH	ASTM F593 Group 7
Shield Pins	Titanium	Ti-6Al-4V	
Source Tube	Titanium	Ti-3Al-2.5V	
Lock Sleeve	Tungsten	Class 1	

Table 3.2b lists the relevant thermal properties of the important materials in the transport package. The sources referred to in the last column are listed below the table.

Table 3.2b: Thermal Properties of Principal Transport Package Materials

Material	Melting Temperature	Maximum Service Temperature	Specific Heat (J/kg K)	Thermal Conductivity (W/m K)	Thermal Expansion (10^{-6} in/in °C)
Depleted Uranium (U-0.75 Ti)	1,130°C (2,066°F) (Ref 1, P821)	850°C (1,562°F) (Value Estimated)	113 at 20°C (68°F) (Ref 4, P1.48)	27 at 20°C (68°F) (Ref 1, P821)	20 (Ref 1, P821)
Stainless Steel (304/304L)	1,400°C (2,552°F) (Ref 2, P10)	925°C (1,697°F) (Ref 2, P511)	500 at 20°C (68°F) (Ref 2, P10)	14.6 at 20°C (68°F) 21.5 at 500°C (932°F) (Ref 2, P10)	18 (Ref 2, P490)
Stainless Steel (17-4PH)	1,400°C (2,552°F) (Ref 2, P10)	925°C (1,697°F) (Value Estimated)	460 at 20°C (68°F) (Ref 2, P10)	18.3 at 20°C (68°F) 23.0 at 500°C (932°F) (Ref 2, P10)	11 (Ref 2, P10)
Titanium (Ti-6Al-4V)	1,688°C (3,070°F) (Ref 3, P513)	350°C (662°F) (Ref 3, P528)	502 at -40°C (-40°F) 930 at 800°C (1472°F) (Ref 3, P514)	6.6 at 20°C (68°F) 17.5 at 650°C (1202°F) (Ref 3, P515)	11 (Ref 3, P516)
Titanium (Ti-3Al-2.5V)	1,700°C (3,092°F) (Ref 3, P 266)	350°C (662°F) (Value Estimated)	502 at -40°C (-40°F) 930 at 800°C (1472°F) (Ref 3, P514)	8.3 at 22°C (72°F) 11.8 at 315°C (599°F) (Ref 3, P269)	10 20 to 540°C (1004°F) (Ref 3, P516)
Tungsten (Class 1)	3,410°C (6,170°F) (Ref 1, P816)	1,500°C (2,732°F) (Ref 1, P817)	131 at 20°C (268°F) (Ref 1, P818)	185 at -40°C (-40°F) 115 at 800°C (1472°F) (Ref 5)	5.4 (Ref 5)

Resource references:

1. Materials Handbook Ninth Edition Volume 2 Properties and Selections: Nonferrous Alloys and Pure Metals, ASM Handbook Committee, 1979.

2. ASM Specialty Handbook Stainless Steels, ed. J. R. Davis, 1994.

3. ASM Material Properties Handbook Titanium Alloys, ed. Rodney Boyer, Gerhard Welsch, E.W. Collings, 1994.

4. ASM Metals Handbook Desk Edition, ed. Howard E. Boyer, Timothy L. Gall, 1985.

5. Mi-Tech Metals Inc. Data Sheet for HD17 with reference to ASTM-B-777-99 Class 1.

3.2.2 Component Specifications

All components are specified and described on the drawings included in the Section 1.3.

3.3 General Considerations

3.3.1 Evaluation by Analysis

Evaluations by analysis are described in the section they apply to in this Safety Analysis Report or when applicable in the Test Plans contained in Section 2.12.

3.3.2 Evaluation by Test

Evaluations by direct testing are documented in the Test Plans contained in Section 2.12 or are described in the section they apply to in this Safety Analysis Report.

3.4 Thermal Evaluation Under Normal Conditions of Transport

3.4.1 Heat and Cold

3.4.1.1 Insolation and Decay Heat

This analysis determines the maximum surface temperature produced by solar heating and the maximum decay heat generation for the basic package configuration when loaded to an activity of 330 Ci of ^{60}Cobalt. This is performed in accordance with 10 CFR 71.71(c)(1) and IAEA TS-R-1. The maximum surface temperature will be compared with the maximum operating temperatures of the materials identified in Table 3.2b.

Figure 3.4a Model of Package for Heat Analysis

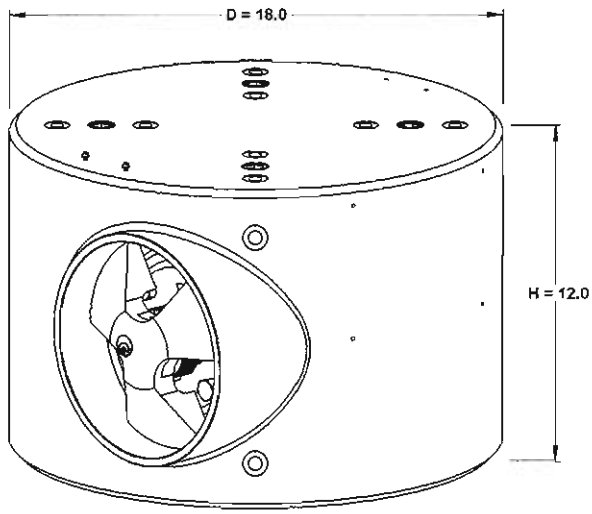

Conductive and convective heat transfer is ignored while radiant heat transfer is used exclusively. This conservative approach provides a worst case estimate of the package's surface temperature since the additional cooling provided by the conductive and convective exchanges are not considered. The first law of thermodynamics energy balance equation is used to resolve surface temperatures from the input parameters of Table 3.4a and 3.4b.

The package is evaluated in the orientation shown in Figure 3.4a, which also defines the overall package dimensions. In order to assure conservatism, the following assumptions are made:

a. Basic Input Parameters:

Table 3.4a Thermal Input Parameters – Normal Condition Transport

Parameter	Symbol	Value
Maximum Content Activity	A	330 Curies of ^{60}Cobalt
Package Height	H	0.31 m (12 in.)
Package Diameter	D	0.46 m (18 in.)
Stefan-Boltzmann constant	σ	5.669×10^{-8} W/m^{2}K^4
Emissivity (Clean Stn Stl) (Ref: Marks' Standard Handbook for Mechanical Engineers Tenth Edition, Eugene A. Avallone and Theodore Baumeister, 1996)	ε	0.3 (Ref, P4-64)
Ambient Temperature	T_A	311 K (38°C)
Top surface area	A_T	0.164 m^2
Side surface area	A_S	0.438 m^2
Top surface thickness	L_T	0.0096 m (0.38 inch)
Maximum Decay Heat	Q_D	5.5 W

1. The transport package is modeled as a vertically oriented cylinder having an 18 inch (0.46 m) diameter and a 12 inch (0.31 m) height (see Figure 3.4.a).

2. The top surface of the package is modeled as flat and horizontal. The side surface of the package is modeled as curved and vertical. The bottom of the package does not contribute to heat loss or gain.

3. The exterior surfaces of package are solid, clean stainless steel. The faces are considered to be sufficiently thin so that no temperature gradients exist in the faces.

4. To maximize the exterior surface temperature, the inside package faces are considered perfectly insulated so there is no conduction into the package. In actual use, the inside package will act as a heat sink during daylight hours and a heat source during the night, but this will be ignored for this calculation.

5. Heat calculations are based on the steady-state energy balance relationship between the heat gained and the heat lost by the package.

6. The package is in thermal equilibrium where emissivity equals absorptivity.

7. The worst case decay heat load (5.5 Watts) is added to the solar heat input load.

8. The solar heat gain on the entire curved side of the package is uniform. No shadows are assumed.

b. Specific Assumptions:

Table 3.4b: Insolation Data

Surface	Insolation for a 12 hour period (g-cal/cm^2 or W/m^2)
Horizontal base (S_H)	None
Other horizontal flat surfaces (S_F)	800
Non-horizontal flat surfaces (S_N)	200
Curved surfaces (S_C)	400

The following heat calculations are based on the steady-state equilibrium relationship between the heat gained by the package and the heat lost.

Heat Input, Q_{IN} = Heat Output, Q_{OUT} in the steady-state

Where:

Q_{IN} = Solar Heat Input + Decay Heat
Q_{OUT} = Heat loss by Radiation only

1. Heat input:

The solar heat input to the top and side surfaces are found independently in order to determine the maximum local surface temperatures at these locations on the package. The decay heat is also directly applied to these surfaces as well to evaluate the worst case heat load.

Q_{TS} = Local solar heat input on top surface
$Q_{TS} = \varepsilon\ S_F\ A_T = 0.3 \times 800\ W/m^2 \times 0.164\ m^2 =$ **39W**

Q_{TL} = Combined solar and decay heat inputs applied locally to the top surface $Q_{TL} = Q_{TS} + Q_D = 39W + 6W =$ **44.5W**

Q_{SS} = Local solar heat input on side surface
$Q_{SS} = \varepsilon\ S_C\ A_S = 0.3 \times 400\ W/m^2 \times 0.438\ m^2 =$ **53W**

Q_{SL} = Combined solar and decay heat inputs applied locally to the side surface $Q_{SL} = Q_{SS} + Q_D = 53W + 5.5W =$ **58.5W**

Q_{IN} = Combined solar and decay heat inputs applied uniformly over the top and side surfaces
$Q_{IN} = 39W + 53W + 5.5W =$ **97.5W**

2. Heat Output

The following heat outputs and subsequent package surface temperatures are derived by using radiant heat transfer only. The actual heat loss and surface temperatures in an open air environment would be less due to the cooling effect provided by the natural convective transfer of the still air around the package. This is a conservative evaluation to reflect a margin of safety designed into the transport package.

Q_{TR} = Heat output radiating from top surface
$Q_{TR} = \sigma\ \varepsilon\ A_T\ (T_W^4 - T_A^4) = \mathbf{2.79\times10^{-9}(T_W^4 - T_A^4)}$

Q_{SR} = Heat output radiating from side surface
$Q_{SR} = \sigma\ \varepsilon\ A_S\ (T_W^4 - T_A^4) = \mathbf{7.45\times10^{-9}(T_W^4 - T_A^4)}$

Q_{OUT} = Heat output radiating from top and side surfaces
$Q_{OUT} = Q_{TR} + Q_{SR} = \mathbf{1.02\times10^{-8}(T_W^4 - 311^4)}$

3. Surface Temperature Calculations

The total heat entering the package equals the total heat leaving the package.

Maximum local top surface temperature, T_T:

$Q_{TL} = Q_{TR}$
$44.5W = 2.79\times10^{-9}(T_W^4 - T_A^4)$

$T_T = (((44.5)/2.79\times10^{-9}) + 311^4)^{0.25}$
$T_T = 399°K$ or $126°C$ (259°F)

Maximum local side surface temperature, T_s:

$Q_{SL} = Q_{SR}$
$58.5W = 7.45\times10^{-9}(T_W^4 - T_A^4)$

$T_s = (((58.5)/7.45\times10^{-9}) + 311^4)^{0.25}$
$T_s = 362°K$ or $89°C$ (192°F)

Average top and side surface temperature, T_w:

$Q_{IN} = Q_{OUT}$
$97.5W = 1.02\times10^{-8}(T_W^4 - 311^4)$

$T_w = ((97.5/1.02\times10^{-8}) + 311^4)^{0.25}$
$T_w = 371°K$ or $98°C$ (208°F)

The maximum surface temperature caused by the effects of solar input and content decay is 126°C (259°F) locally at the top surface of the package. This temperature constitutes the most onerous Normal Transport thermal condition. Based on the package materials of construction for components important to safety, this temperature will not be sufficient to adversely affect the containment or shielding integrity as it is well below the maximum service temperature for the materials. As such, the package complies with the requirements of this section.

3.4.1.2 Still Air (shaded) Decay Heating

This analysis calculates the maximum surface temperature of the Models Sentry 110, Sentry 330 and 867 Transport Packages in the shade (i.e., no insolation effects), assuming an ambient temperature of 38°C (100°F), per 10 CFR 71.43(g).

The same assumptions from Section 3.4.1.1 are used. The decay heat is assumed to be distributed equally over the entire exterior surface of the package.

The total heat entering the package equals the total heat leaving the package.

$$Q_{IN} = Q_{OUT}$$

Where:

Q_{IN} = Decay Heat = 5.5W
Q_{OUT} = Radiant Heat loss by top and side surfaces of package

The maximum surface temperature, T_w, of top and side surfaces based on radiant heat transfer only:

$$Q_{IN} = Q_{OUT}$$
$$5.5W = 1.50\times10^{-8}(T_W^4 - 311^4)$$

$$T_w = ((5.5/1.50\times10^{-8}) + 311^4)^{0.25}$$
$$T_w = 314°K \text{ or } 41°C\ (106°F)$$

The maximum package surface temperature caused by the radioactive decay of the package contents is conservatively 41°C. This temperature less than the maximum 50°C (122°F) allowed by 10 CFR 71.43(g).

3.4.1.3 Cold Effected Materials

An ambient air temperature of –40°C (-40°F) in still air and shade has no effect on the safety of the package. The safety materials: stainless steel, titanium, tungsten and depleted uranium retain their mechanical properties at this temperature. Thus, it is concluded that the Models Sentry 110, Sentry 330 and 867 Transport Packages will withstand the normal transport cold condition.

3.4.2 Temperatures Resulting in Maximum Thermal Stresses

There are two areas of concern on the package when considering maximum thermal stresses occurring during normal conditions of transport. The top of the package would see the highest temperature differential due to the effects of solar heating. A highly stressed welded body could potentially deform enough to cause rupture at the weld seam.

The other area is the internal depleted uranium shield connection with the welded body at the side access ports. A high temperature differential between the titanium pins and depleted uranium shield could cause unacceptable stress at the connections. This could possibly fracture the shield at the connection and permit the shield to shift slightly during normal handling, allowing the source to locate in a less shielded position which might increase radiation levels around the package.

3.4.2.1 Package Surface

If the top of the package is at 126°C due to solar heating from Section 3.4.1.1 and its initial temperature was 38°C, then this temperature difference (88°C) would increase the diameter of the stainless steel top plate to a maximum of 0.029 inches: (88°C x 18E-6 in/in °C x 18 in).

However, the side surface would also increase in diameter due to solar heating. The side surface would heat to 89°C from its initial temperature of 38°C. This temperature difference would increase the diameter of the tube shaped side surface to a maximum of 0.017 inches: (((51°C x 18E-6 in/in °C x π x 18 in) + (π x 18 in)) /π) -18 in).

The relative expansion or strain of 0.012 inches (0.029 – 0.017) would produce an internal stress of 19,333 psi: (29E+6 x (0.012/18 in)). This stress is about half the allowable yield strength of the material and will be insufficient to cause rupture in the base material or the weld seams.

3.4.2.2 Depleted Uranium Shield Connection

If the maximum side surface temperature of the package at the access ports conducts without losses through to the internal titanium pins, then the temperature of the pins at the connection could be 89°C. In the worst case, the depleted uranium shield could still be at the initial temperature of 38°C for a 51°C temperature differential between the pin and shield.

The smallest sized pin mounting hole in the shield when at 38°C is 0.740 inches. The largest pin diameter at 38°C is 0.730 inches. At the initial temperature, a 0.010 inch minimum design clearance exists between the pin and hole.

If the diameter of the titanium pin were to expand due to the 51°C temperature change, it would grow by only 0.0004 inches (51°C x 11E-6 in/in °C x 0.730 in). This increase in diameter of the shield pin is significantly less than the design clearance for these parts, and will not produce stress to the depleted uranium shield or pin.

Based on these assessments, it is concluded that the Model Sentry 110, Sentry 330 and 867 transport packages will maintain their structural integrity and shielding effectiveness under the normal transport thermal stress conditions.

3.4.3 Maximum Normal Operating Pressure

The Models Sentry 110, Sentry 330 and 867 transport packages are provided with holes and design clearance at the access ports to allow venting to the atmosphere during pressure changes. The small openings will prevent pressure build up in the package during Normal Transport conditions. No other contributing gas sources are present. As such, pressure will not build up and will exhibit a pressure differential of 0 psi during Normal Transport conditions.

3.5 Thermal Evaluation Under Hypothetical Accident Conditions

3.5.1 Initial Conditions

The thermal test was not performed. Rather, an assessment was made to demonstrate that the thermal test would not create sufficient additional damage to the package that would cause it to fail the final profile criteria or the source containment integrity.

Consideration of the principle materials of manufacture and their melting points (See Table 3.2b.), along with the results of the 30 foot free drop and puncture tests indicate that these packages would not fail and their shielding integrity would not be significantly degraded by the thermal test.

The worst case initial temperature of the package and its contents is -40°C since this low temperature would provide the highest thermal differential between the contents, shield and exterior surface of the package during an 800°C fire test. There is no worst case initial pressure since the package is essentially open to the environment allowing pressure within the package to be balanced with the surrounding environment. The maximum contents decay heat is 5.5 W.

3.5.2 Fire Test Conditions

The basis for a successful thermal test for these transport packages depends on a number criteria. First, the welded stainless steel body must remain intact to ensure the polyurethane foam protects the shield during the fire test.

The 30-foot free drop and puncture tests of Test Plans 180 and 195 demonstrated the packages ability to withstand high impact and puncture loads without a substantial breach in the exterior of the package surface. Damage incurred during the drop testing (4 foot, 30 foot and puncture) was minimal, consisting of insignificant deformation of the rib/brace assemblies and port extension weldments. There were no holes or tears in the body weldment to allow air to circulate through the

package. None of the damage significantly increased, or created new pathways for the ingress of oxygen. Oxygen ingress has been shown empirically to be the primary contributing factor in the oxidation of depleted uranium shields during thermal testing (see Sections 2.12).

Under Test Plan Report 72-S2 (Section 2.12), in support of Certificate of Compliance number USA/9035/B(U) for the Model 680-OP Series, camera s/n B198 was subjected to thermal testing. Before testing, the unit was intact and essentially undamaged with no gaps between mating surfaces. After the 30 foot and puncture drop tests, ¾ inch long by 1/16 inch wide gaps were present on both sides of the unit at the side plate/shell interface. Thermocouple readings showed temperatures of up to 1000°C on the unit and over 900°C within the depleted uranium shield. The foam was completely pyrolized but was contained within the unit. No oxidation of the shield occurred and the unit passed final profile at 0.330 R/hr at one meter.

Under Test Plan 80 Report (Section 2.12), in support of Certificate of Compliance number USA/9269/B(U) for the Model 650L, test specimen TP80(B) was subjected to thermal testing. The drop tests (30 foot and puncture) caused the outer shell to split completely open and the inner shell to crack, creating a 3 inch long by ½ inch wide gap. Subsequent thermal testing caused pyrolization of all the foam and vaporization in the area of the gap. Some minor oxidation of the shield was also noted. Thermocouples recorded temperatures in the shield of over 900°C and close to 1000°C at the shell. Although the shield oxidized slightly in the area of the gap, the unit passed final profile at 0.028 R/hr at one meter.

As demonstrated in previous thermal testing, minor air gaps in the containment surrounding the shield are insufficient to allow significant oxidation of the depleted uranium shield during the thermal test. Without a large breach in the exterior of the package, there will be little or no oxygen flow to allow combustion of the polyurethane foam surrounding the shield during the fire test. The foam and welded body protects the shield from oxidizing and deteriorating during the fire test. The only openings that exist between the shield and the environment are the design clearances at the access ports and the array of fastener holes (when not used) around the welded body.

These openings will allow the polyurethane foam to expand when subjected to high temperatures. The rigid polyurethane foam is a cross-linked thermoset plastic that will not melt, but will instead pyrolize at the clearances and fastener holes leaving an effective thermal insulator as it slightly oozes out and chars at those openings.

The Model Sentry 110, Sentry 330 and 867 test specimens had no breach of the shield containment and would therefore prevent oxygen ingress to the shield and any resulting deterioration of the depleted uranium shield during the thermal test.

Second, the shield mounting structure must retain enough strength at 800°C for 30 minutes and during cool down to support shield at its post puncture test location. The radiation profile inspection results after the 30-foot and puncture tests confirm the shield support structure provided sufficient shielding of the package contents after the puncture test and before the thermal test. The maximum service temperature for the stainless steel body is above 800°C for continuous use. This ensures the shield will remain confined within the package in the location found after the 30-foot and puncture tests.

Third, the shield material must retain its ability to sufficiently shield the package contents during and after the hypothetical accident thermal test. Again, the radiation profile inspection results after the 30-foot and puncture tests confirm the shield provides sufficient shielding of the package contents before the thermal test. Since the package exterior remained intact, the shield will not oxidize or degrade during and after the thermal test. The shield melting temperature (1,100°C) is well above the 800°C test temperature, and it is highly unlikely the foam insulated shield will reach 800°C during the 30 minute test. Therefore, the shield of these transport packages will keep its ability to sufficiently shield its contents during and after the hypothetical accident thermal test.

Forth, the package contents must remain intact enough to prevent dispersal of radioactive material within and outside the package. The source capsule used as the primary containment for the radioactive contents in these packages has successfully passed the ANSI N542-1978 Class 6 thermal test where it was subjected to an oven temperature of 800°C for 1 hour then checked for leakage. Therefore, the contents at the center of the shield and package will remain intact and prevent dispersal of radioactive material in or out of the package under the thermal test conditions.

Based on the testing performed for the 30 foot drop and 1 meter puncture tests, along with the previous empirical data and analyses, we conclude that oxidation of the shield will not occur, the structural integrity of the package will remain intact and the containment of the source will not be affected. As such, the Models Sentry 110, Sentry 330 and 867 will pass the thermal test without exceeding the final profile criteria.

3.5.3 Maximum Temperatures and Pressure

The Models Sentry 110, Sentry 330 and 867 containers are provided with holes and design clearance at the access ports to allow venting to the atmosphere during pressure changes. These small openings will prevent pressure build up in the package during a hypothetical accident condition and will relieve any internal generation or expansion of gases created by the elevated temperatures. No other contributing gas sources are present. As such, pressure will not build up in the packages during Hypothetical Accident Transport conditions. These containers will exhibit a pressure differential of 0 psi as they are vented to the atmosphere with no means for creating a pressure differential. No other contributing gas sources are present.

3.5.4 Temperatures Resulting in Maximum Thermal Stresses

The temperature and pressure variations described in Sections 3.4.1 and 3.4.3 will not adversely affect the transport package during normal transport since the melting temperatures of all safety critical components are well above these temperatures and the package will experience no pressures sufficient to cause package failure.

The maximum thermal stresses during a fire test are examined at the shield connections with the welded body at the access ports and at the center of the shield at the source wire assembly (package contents). These two areas could potentially experience the highest temperature extremes as a result of the fire test heat input.

If we assume the entire exterior surface of the package to be at 800°C and the initial package temperature to be -40°C, then the maximum temperature difference occurring in the package is equal to 840°C (800°C – (- 40°C)).

The package exterior could get to the 800°C flame temperature relatively quickly but the internal shield would delay getting to the test temperature because of air gaps and foam insulation between it and the package exterior. It's quite possible the shield will never get to 800°C during and after the 30 minute test period.

Regarding the shield connection, thermal stress could exist at the pinned shield connection points within the welded body. If we assume the heat from the fire conducts from the exterior surface into the welded body, without losses, through to the titanium pins, then the temperature of the pins could be 800°C. In a worst case condition, the shield could still be at the initial temperature of -40°C. This results in an 840°C temperature differential between the pin and shield.

The smallest shield hole is 0.740 inches at room temperature (38°C). The shield hole shrinks to 0.739 inches due to the -78°C temperature drop from room temperature to the initial temperature (-40°C).

The largest pin diameter is 0.730 inches at room temperature (38°C). The pin diameter expands to 0.736 inches due to the 762°C temperature rise from room temperature to the test temperature (800°C).

The temperature affect continues to allow a 0.003 inch design clearance between the pin and the shield hole. The clearance prevents thermal stresses to occur at the shield connection points in the package.

Regarding impact on the source wire assembly and capsule contents, a thermal gradient exists when the exterior surface of the package is at 800°C and the radioactive source at the center of the package is at -40°C. The gradient could cause thermal stresses to occur at the source wire assembly while in the package.

The source wire assembly has the freedom to slightly expand, contract, and pivot within the shield source tube channel. This slight freedom of movement prevents thermal stresses to buildup in the source wire assembly.

There could be a 0.15 inch increase in the length of the longest (10.94 inches at 38°C) stainless steel source wire caused by the 762°C temperature increase of the fire test. The increase in length will slightly alter the position of the source within the shield, but it is not enough to increase the external radiation dose rate over 10 mSv/h (1 rem/h) at 1 m (40 in) from the external surface of the package.

It its therefore concluded that the Models Sentry 110, Sentry 330 and 867 transport package will maintain their structural integrity and shielding effectiveness under the normal transport thermal stress conditions.

3.5.5 Fuel/Cladding Temperatures for Spent Nuclear Fuel

Not Applicable. This package is not used for transport of spent nuclear fuel.

3.5.6 Accident Conditions for Fissile Material Packages for Air Transport

Not Applicable. This package is not used for transport of Type B quantities of fissile material.

3.6 Appendix

Not Applicable.

Section 4 – CONTAINMENT

4.1 Description of the Containment System

The primary containment system for the package is the welded radioactive source capsule. This source capsule shall be qualified as Special Form radioactive material under 49 CFR 173 and IAEA TS-R-1. The special form source capsule is attached to flexible handling wire and maintained within the shielded configuration of the package by means of lock mechanisms after the source wire assembly is inserted into the shield tube(s).

4.1.1 Special Requirements for Damaged Spent Nuclear Fuel

Not applicable. These packages do not transport spent nuclear fuel.

4.2 Containment Under Normal Conditions of Transport

As demonstrated in Test Plan 180 Report #1 and #2, the normal conditions of transport testing will not cause any no breach of the source capsules contained in the package. Since the source capsules are the primary containment of the radioactive contents and no release from the source capsules occurred, the Models Sentry 110, Sentry 330 and 867 transport packages meet the requirements of this section.

4.3 Containment Under Hypothetical Accident Conditions

As demonstrated in Test Plan 180 Report #2 and Test Plan Report 195, after performance of the hypothetical accident conditions of transport testing radiation level at one meter from the surface of the package did not exceed 1 R/hr and again there was no breach of the source capsules contained in the package. The Models Sentry 110, Sentry 330 and 867 transport packages meet the requirements of this section.

4.4 Leakage Rate Tests for Type B Packages

The primary containment for the radioactive material in the Models Sentry 110, Sentry 330 and 867 Transport Packages is the radioactive source capsule. All source capsules authorized for Type B transport in the Models Sentry 110, Sentry 330 and 867 are certified as special form radioactive material under 10 CFR Part 71, 49 CFR Part 173 and IAEA TS-R-1. After manufacture and again once every six months thereafter prior to transport, the source capsule is leak tested in accordance with ISO9978:1992(E) (or more recent editions) to ensure that containment of the source does not allow release of more than 0.005 μCi of radioactive material. These fabrication and periodic tests ensure that contamination release from the package does not exceed the regulatory limits.

Reference : ISO9978:1992(E) – Radiation Protection – Sealed Radioactive Sources – Leakage Test Methods.

4.6 Appendix

Not Applicable.

Section 5 - SHIELDING EVALUATION

5.1 Description of Shielding Design

5.1.1 Design Features

The principal shielding in the Models Sentry 110, Sentry 330 and 867 transport package is the depleted uranium shield assembly. The shielding is cast as one piece and is essentially enclosed by stainless steel. Dimensional information for the individual shield containers is contained in the shield drawings included in Section 1.3.

5.1.2 Summary Table of Maximum Radiation Levels

Radiation levels shown in Tables 5.1a and 5.1b are based on the worst case radiation levels produced on Model Sentry 330 test specimens from Test Plan 180 Reports #1 and #2 and Test Plan Report 195. Radiation levels shown for the Model Sentry 110 and 867 packages are based on untested units but due to similarities of construction, the maximum dose rates from these two alternate models will be the same or lower than those documented for the tested Model Sentry 330 packages.

Table 5.1a: Sentry 330 sn TP180C Basic Configuration Summary Table of External Radiation Levels (Non-Exclusive Use)[1, 3]

	Package Surface mSv/h (mrem/h)			1 Meter from Package Surface mSv/h (mrem/h)		
Normal Conditions of Transport[2]	Top	Side	Bottom	Top	Side	Bottom
Gamma	0.26 (26)	0.71 (71)	0.39 (39)	0.0047 (0.47)	0.0128 (1.28)	0.0078 (0.78)
Neutron	NA	NA	NA	NA	NA	NA
Total	0.26 (26)	0.71 (71)	0.39 (39)	0.0047 (0.47)	0.0128 (1.28)	0.0078 (0.78)
10 CFR 71.47(a) Limit	2 (200)	2 (200)	2 (200)	0.1 (10)	0.1 (10)	0.1 (10)
Hypothetical Accident Conditions[2]						
Gamma				0.0047 (0.47)	0.0128 (1.28)	0.0078 (0.78)
Neutron				NA	NA	NA
Total				0.0047 (0.47)	0.0128 (1.28)	0.0078 (0.78)
10 CFR 71.51(a)(2) Limit				10 (1000)	10 (1000)	10 (1000)

[1]Results for test unit TP180C represent the highest surface dose rates from any test specimen after performance of the Normal Condition Transport Testing. The Basic transport configuration bounds the Standard transport configuration and provides the worst case estimate of surface does rates for both package configurations.
[2]Survey Results for sn TP180C are reported after performance of both the Normal and Hypothetical Accident ConditionTesting (See Sections 2.6 and 2.7).
[3]Table results are extrapolated to the device capacity and incorporate surface correction factors

Table 5.1b: Sentry 330 sn TP180C Basic Configuration Summary Table of External Radiation Levels (Exclusive Use)[1,6]

	Package (or Freight Container) Surface mSv/h (mrem/h)			2 Meters from Outer Vehicle Surface mSv/h (mrem/h)		
Normal Conditions of Transport[4,5]	Top	Side	Bottom	Top	Side	Bottom
Gamma	0.26 (26)	0.71 (71)	0.39 (39)	0.0047 (0.47)	0.0128 (1.28)	0.0078 (0.78)
Neutron	NA	NA	NA	NA	NA	NA
Total	0.26 (26)	0.71 (71)	0.39 (39)	0.0047 (0.47)	0.0128 (1.28)	0.0078 (0.78)
10 CFR 71.47(b) Limit	10 (1000)[2]	10 (1000)[2]	10 (1000)[2]	0.1 (10)	0.1 (10)	0.1 (10)
	Vehicle Surface mSv/h (mrem/h)			**Occupied Position mSv/h (mrem/hr)**		
Gamma	< 0.26 (26)	< 0.71 (71)	< 0.39 (39)	≤ 0.02 (2)[3]		
Neutron	NA	NA	NA	NA		
Total	< 0.26 (26)	< 0.71 (71)	< 0.39 (39)	≤ 0.02 (2)[3]		
10 CFR 71.47(b) Limit	2 (200)	2 (200)	2 (200)	0.02 (2)		
Hyothetical Accident Conditions[4]				**1 Meter from Package Surface mSv/h (mrem/hr)**		
Gamma				0.0047 (0.47)	0.0128 (1.28)	0.0078 (0.78)
Neutron				NA	NA	NA
Total				0.0047 (0.47)	0.0128 (1.28)	0.0078 (0.78)
10 CFR 71.51(a)(2) Limit				10 (1000)	10 (1000)	10 (1000)

[1]For packages transported by roadway, railway and sea.
[2]For packages in closed vehicles, otherwise, 2 (200).
[3]Confirmed at time of vehicle loading prior to shipment.
[4]Table results are extrapolated to the device capacity and incorporate surface correction factors.
[5]Results for test unit TP180C represent the highest surface dose rates from any test specimen after performance of the Normal Condition Transport Testing.
[6]Survey Results for sn TP180C are reported after performance of both the Normal and Hypothetical Accident ConditionTesting (See Sections 2.6 and 2.7).

Table 5.1c: Sentry 330 sn TP180G Summary Table of External Radiation Levels (Non-Exclusive Use)[1,3]

	Package Surface mSv/h (mrem/h)			1 Meter from Package Surface mSv/h (mrem/h)		
Normal Conditions of Transport[2]	Top	Side	Bottom	Top	Side	Bottom
Gamma	0.23 (23)	0.53 (53)	0.29 (29)	0.004 (0.4)	0.017 (1.7)	0.003 (0.3)
Neutron	NA	NA	NA	NA	NA	NA
Total	0.23 (23)	0.53 (53)	0.29 (29)	0.004 (0.4)	0.017 (1.7)	0.003 (0.3)
10 CFR 71.47(a) Limit	2 (200)	2 (200)	2 (200)	0.1 (10)	0.1 (10)	0.1 (10)
Hypothetical Accident Conditions						
Gamma				0.0054 (0.54)	0.0220 (2.20)	0.0066 (0.66)
Neutron				NA	NA	NA
Total				0.0054 (0.54)	0.0220 (2.20)	0.0066 (0.66)
10 CFR 71.51(a)(2) Limit				10 (1000)	10 (1000)	10 (1000)

[1]Results for test unit TP180G represent the highest surface dose rates from any test specimen after performance of the Hypothetical Accident Condition Transport Testing. The Basic transport configuration bounds the Standard transport configuration and provides the worst case estimate of surface does rates for both package configurations.
[2]Results shown for Normal Conditions of Transport are the radiation survey results prior to performance of any testing on the test specimen.
[3]Table results are extrapolated to the device capacity and incorporate surface correction factors.

Table 5.1d: Sentry 110 sn TP178A Summary Table of External Radiation Levels (Non-Exclusive Use)[1,3]

	Package Surface mSv/h (mrem/h)			1 Meter from Package Surface mSv/h (mrem/h)		
Normal Conditions of Transport	Top	Side	Bottom	Top	Side	Bottom
Gamma	0.6 (60)	1.02 (102)	0.62 (62)	0.011 (1.1)	0.031 (3.1)	0.011 (1.1)
Neutron	NA	NA	NA	NA	NA	NA
Total	0.6 (60)	1.02 (102)	0.62 (62)	0.011 (1.1)	0.031 (3.1)	0.011 (1.1)
10 CFR 71.47(a) Limit	2 (200)	2 (200)	2 (200)	0.1 (10)	0.1 (10)	0.1 (10)
Hypothetical Accident Conditions[2]						
Gamma				<10 (1000)	<10 (1000)	<10 (1000)
Neutron				NA	NA	NA
Total				<10 (1000)	<10 (1000)	<10 (1000)
10 CFR 71.51(a)(2) Limit				10 (1000)	10 (1000)	10 (1000)

[1]Results for test unit TP178A represent the highest surface dose rates from a typical Sentry 110 package in the Basic transport configuration. The Basic transport configuration bounds the Standard transport configuration and provides the worst case estimate of surface does rates for both package configurations. Maximum surface and 1 meter radiation levels from any transport package will not exceed the limits in 10 CFR 71.47(a).
[2]Values shown for Hypothetical Accident Conditions of Transport are based on correlation to testing performed on the Sentry 330 transport packages. Due to similarities of construction in the package designs, it is reasoned that the Sentry 110 packages will never exceed the maximum radiation level limit in 10 CFR 71.47(a)(2) under Hypothetical Accident conditions.
[3]Table results are extrapolated to the device capacity and incorporate surface correction factors.

Table 5.1e: Sentry 110 sn TP178A Summary Table of External Radiation Levels (Exclusive Use)[1,5]

	Package (or Freight Container) Surface mSv/h (mrem/h)			2 Meters from Outer Vehicle Surface mSv/h (mrem/h)		
Normal Conditions of Transport[4]	Top	Side	Bottom	Top	Side	Bottom
Gamma	0.6 (60)	1.02 (102)	0.62 (62)	0.011 (1.1)	0.031 (3.1)	0.011 (1.1)
Neutron	NA	NA	NA	NA	NA	NA
Total	0.6 (60)	1.02 (102)	0.62 (62)	0.011 (1.1)	0.031 (3.1)	0.011 (1.1)
10 CFR 71.47(b) Limit	10 (1000)[2]	10 (1000)[2]	10 (1000)[2]	0.1 (10)	0.1 (10)	0.1 (10)
	Vehicle Surface mSv/h (mrem/h)			**Occupied Position mSv/h (mrem/hr)**		
Gamma	<0.6 (60)	<1.02 (102)	<0.62 (62)	≤ 0.02 (2)[3]		
Neutron	NA	NA	NA	NA		
Total	<0.6 (60)	<1.02 (102)	<0.62 (62)	≤ 0.02 (2)[3]		
10 CFR 71.47(b) Limit	2 (200)	2 (200)	2 (200)	0.02 (2)		
Hyothetical Accident Conditions[6]				**1 Meter from Package Surface mSv/h (mrem/hr)**		
Gamma				<10 (1000)	<10 (1000)	<10 (1000)
Neutron				NA	NA	NA
Total				<10 (1000)	<10 (1000)	<10 (1000)
10 CFR 71.51(a)(2) Limit				10 (1000)	10 (1000)	10 (1000)

[1]For packages transported by roadway, railway and sea.
[2]For packages in closed vehicles, otherwise, 2 (200).
[3]Confirmed at time of vehicle loading prior to shipment.
[4]Table results are extrapolated to the device capacity and incorporate surface correction factors.
[5]Results for sn TP178A represent the highest from a typical Sentry 110 package in the Basic transport configuration. The Basic transport configuration bounds the Standard transport configuration and provides the worst case estimate of surface does rates for both package configurations. Maximum surface and 1 meter radiation levels from any transport package will not exceed the limits in 10 CFR 71.47(a).
[6]Values shown for Hypothetical Accident Conditions of Transport are based on correlation to testing performed on the Sentry 330 transport packages. Due to similarities of construction in the package designs, it is reasoned that the Sentry 110 packages will never exceed the maximum radiation level limit in 10 CFR 71.47(a)(2) under Hypothetical Accident conditions.

Table 5.1f: 867 sn T180J Summary Table of External Radiation Levels (Non-Exclusive Use)[1, 3]

	Package Surface mSv/h (mrem/h)			1 Meter from Package Surface mSv/h (mrem/h)		
Normal Conditions of Transport	Top	Side	Bottom	Top	Side	Bottom
Gamma	0.4 (40)	1.39 (139)	0.5 (50)	0.007 (0.7)	0.024 (2.4)	0.007 (0.7)
Neutron	NA	NA	NA	NA	NA	NA
Total	0.4 (40)	1.39 (139)	0.5 (50)	0.007 (0.7)	0.024 (2.4)	0.007 (0.7)
10 CFR 71.47(a) Limit	2 (200)	2 (200)	2 (200)	0.1 (10)	0.1 (10)	0.1 (10)
Hypothetical Accident Conditions[2]						
Gamma				<10 (1000)	<10 (1000)	<10 (1000)
Neutron				NA	NA	NA
Total				<10 (1000)	<10 (1000)	<10 (1000)
10 CFR 71.51(a)(2) Limit				10 (1000)	10 (1000)	10 (1000)

[1]Results for test unit TP180J represent the highest surface dose rates from a typical Model 867 package in the Basic transport configuration. The Basic transport configuration bounds the Standard transport configuration and provides the worst case estimate of surface does rates for both package configurations. Maximum surface and 1 meter radiation levels from any transport package will not exceed the limits in 10 CFR 71.47(a).

[2]Values shown for Hypothetical Accident Conditions of Transport are based on correlation to testing performed on the Sentry 330 transport packages. Due to similarities of construction in the package designs, it is reasoned that the Model 867 package will never exceed the maximum radiation level limit in 10 CFR 71.47(a)(2) under Hypothetical Accident conditions.

[3]Table results are extrapolated to the device capacity and incorporate surface correction factors.

Table 5.1g: 867 sn T180J Summary Table of External Radiation Levels (Exclusive Use)[1,5]

	Package (or Freight Container) Surface mSv/h (mrem/h)			2 Meters from Outer Vehicle Surface mSv/h (mrem/h)		
Normal Conditions of Transport[4]	Top	Side	Bottom	Top	Side	Bottom
Gamma	0.4 (40)	1.39 (139)	0.5 (50)	0.007 (0.7)	0.024 (2.4)	0.007 (0.7)
Neutron	NA	NA	NA	NA	NA	NA
Total	0.4 (40)	1.39 (139)	0.5 (50)	0.007 (0.7)	0.024 (2.4)	0.007 (0.7)
10 CFR 71.47(b) Limit	10 (1000)[2]	10 (1000)[2]	10 (1000)[2]	0.1 (10)	0.1 (10)	0.1 (10)
	Vehicle Surface mSv/h (mrem/h)			**Occupied Position mSv/h (mrem/hr)**		
Gamma	<0.4 (40)	<1.39 (139)	<0.5 (50)	≤ 0.02 (2)[3]		
Neutron	NA	NA	NA	NA		
Total	<0.4 (40)	<1.39 (139)	<0.5 (50)	≤ 0.02 (2)[3]		
10 CFR 71.47(b) Limit	2 (200)	2 (200)	2 (200)	0.02 (2)		
Hyothetical Accident Conditions[6]				**1 Meter from Package Surface mSv/h (mrem/hr)**		
Gamma				<10 (1000)	<10 (1000)	<10 (1000)
Neutron				NA	NA	NA
Total				<10 (1000)	<10 (1000)	<10 (1000)
10 CFR 71.51(a)(2) Limit				10 (1000)	10 (1000)	10 (1000)

[1]For packages transported by roadway, railway and sea.
[2]For packages in closed vehicles, otherwise, 2 (200).
[3]Confirmed at time of vehicle loading prior to shipment.
[4]Table results are extrapolated to the device capacity and incorporate surface correction factors.
[5]Results for sn TP180J represent the highest from a typical Model 867 package in the Basic transport configuration. The Basic transport configuration bounds the Standard transport configuration and provides the worst case estimate of surface does rates for both package configurations. Maximum surface and 1 meter radiation levels from any transport package will not exceed the limits in 10 CFR 71.47(a).
[6]Values shown for Hypothetical Accident Conditions of Transport are based on correlation to testing performed on the Sentry 330 transport packages. Due to similarities of construction in the package designs, it is reasoned that the Model 867 package will never exceed the maximum radiation level limit in 10 CFR 71.47(a)(2) under Hypothetical Accident conditions.

5.2 Source Specification

5.2.1 Gamma Source

The gamma sources allowed for transport in the Models Sentry 110, Sentry 330 and 867 are described in Sections 1.2.3 and 2.10.

5.2.2 Neutron Source

Not Applicable. These packages are not used for the transportation of neutron emitting sources.

5.3 Shielding Model

5.3.1 Configuration of Source and Shielding

A shielding model was not used as the primary justification for these packages. Shielding justification was based on direct measurement.

5.3.2 Material Properties

Not Applicable. A shielding model was not used in the justification for these packages. Shielding justification was based on direct measurement.

5.4 Shielding Evaluation

5.4.1 Methods

Shielding justification was based on direct measurement. See Test Plan 180 Report, Test Plan Report 195 (see Section 2.12) as well as additional profile results in Section 5.5 for radiation surveys of these transport packages.

5.4.2 Input and Output Data

Radiation measurements included in this Section were adjusted to the maximum activity capacity for the package (e.g., activity correction factor) and the surface measurements were also adjusted to correct for off-set of the survey meter probe from the true surface of the package.

Activity correction factors (CF_A) were obtained by using the following relationship:

$$CF_A = \frac{Maximum\,Package\,Activity\,Capacity\ (A_C)}{Actual\ \mathrm{Pr}\,ofile\,Activity\ (A_P)}$$

$$For\,Example,\ if\ A_P = 270\,Ci\ and\ A_C = 330\,Ci,\ then$$

$$CF_A = \frac{330\,Ci}{270\,Ci} = 1.2$$

Therefore all original surface and 1 meter profile measurements would be multiplied by a factor of 1.2 for a package profiled using 270 Ci and a package capacity of 330 Ci.

Radiation measurements at the surface of the container were also adjusted to compensate for the off-set of the survey meter probe from the true surface of the package.

Surface correction factors (SCF) were obtained by using the following relationship:

$$SCF = \frac{d_2}{d_1} \text{ where } d_1 \text{ and } d_2 \text{ are determined as shown in Figure 5.1a.}$$

$$\text{For Example, if } d_1 = 9 \text{ inches and } d_2 = 9.5 \text{ inches, then}$$

$$SCF = \frac{9.5 \text{ inches}}{9 \text{ inches}} = 1.06$$

Therefore in the example shown, all original surface profile measurements located along the side of the drum shown in Figure 5.a would also be multiplied by a factor of 1.06 to account for surface correction of the detector to the drum. Different SCF's would be calculated for the any dimension of the container where the minimum distance from the center of the activity to the center of the radiation probe is different.

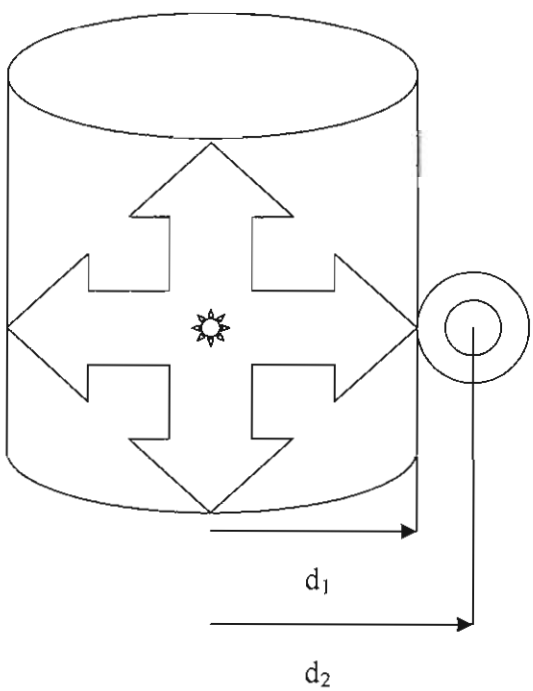

d_1 =	distance from activity center to surface of container.
d_2 =	distance from activity center to surface of container plus radius of the survey meter probe.

FIGURE 5.1a. SAMPLE SURFACE CORRECTION FACTOR DISTANCE CRITERIA

The radiation profile data showed no increase in radiation dose after testing beyond normal measurement variations. All test specimens met the regulatory requirements.

5.4.3 Flux-to-Dose-Rate Conversion

Not Applicable. Flux rates were not used to convert to dose rates in any shielding evaluations.

5.4.4 External Radiation Levels

Radiation surveys for the Models Sentry 110, Sentry 330 and 867 configurations showed maximum surface and 1 meter radiation levels from the transport packages within regulatory limits. Radiation surveys of Models Sentry 110, Sentry 330 and 867 Transport Packages, after undergoing normal and accident condition transport testing, were also well within the regulatory limits.

5.5 Appendix

5.5.1 Additional Profile Supportive Profile sheets

5.5.1 Additional Profile Supportive Profile sheets

5.5.1.1 Model Sentry 110 sn TP178A

5.5.1.2 Model 867 sn T180J

QSA GLOBAL

SHIELDING PROFILE AND INSPECTION FORM (SPIF) F-Q-1806-2

Sheet 1 of 1

Shield Data

Model: Sentry 110	Serial # TP178A	Radionuclide: Co-60	Max. Capacity 110 Ci
Shield P/N: 8600I-110	Shield Heat # C586-A06	Lot # 0905800604	

Profile Process Data

Source Model: 424-14	Source Ser. # 46498B	Radionuclide: Co-60	Activity: 50.3 Ci
Survey Inst. 1 E600	Serial # 2750	Date Cal. 4/10/10	Date Due: 4/10/11
Survey Inst. 2 NA	Serial # NA	Date Cal. NA	Date Due: NA
Inst. Probe: 1 HB 270	Serial # 706	Inst. Probe: 2 NA	Serial # NA
Capacity Correction Factor: 2.19			

	Measured Dose Rate mR/hr				Adjusted Dose Rate mR/hr		
Location	At Surface	Surface Corr. Factor	At 30 Cm [Note 2]	At One Meter	At Surface	At 30 Cm [Note 2]	At One Meter [Note 1]
Top	25	1.09	2.0	.5	60	4.4	1.1
Right	26	1.06	5.2	1.0	60	11.4	2.2
Front	23	1.06	4.7	1.1	53	10.3	2.4
Left	44	1.06	7.3	1.4	102	16.0	3.1
Rear	26	1.06	4.7	1.1	60	10.3	2.4
Bottom	26	1.09	1.3	.5	62	2.9	1.1
				Acceptance Criteria:	≤ 200	NA	≤ 5.0
			Result: (Check one)	Accept	✓	Reject	

Inspector: [signature] Date: 6/2/10 NCR # _____

Comments:
1 meter Readings are less background .04
Bottom 1 meter and 30 cm Readings are less background .75
30 cm meter Readings are less background .06

Notes:

1. Refer to F-Q-1806-1, Shield Efficiency Testing Surface Correction Factors for an existing device model, or F-Q-1806-3, Shield Profile Worksheet forOne meter acceptance limit.
2. The 30cm readings are only required when specifically requested.
3. Additional sheets may be used to describe results or indicate reading locations using sketches. Number all sheets and indicate total number of sheets. Make sure shield Identification is included on each sheet.
4. Attach auto profiler print out to this sheet if used.

QSA GLOBAL

SHIELDING PROFILE AND INSPECTION FORM (SPIF) F-Q-1806-2

Sheet 1 of 1

Shield Data

Model: 86715-330	Serial # T180J	Radionuclide: Co 60	Max. Capacity 330 Ci
Shield P/N: 86701-330	Shield Heat # C630-A07		Lot # 0928600403

Profile Process Data

Source Model: A424-13	Source Ser. # 27746B	Radionuclide: Co 60	Activity: 181.8 Ci
Survey Inst. 1 E600	Serial # 1863	Date Cal. 9/2/10	Date Due: 9/2/11
Survey Inst. 2 NA	Serial # NA	Date Cal. NA	Date Due: NA
Inst. Probe: 1 SHP270	Serial # 00542	Inst. Probe: 2 NA	Serial # NA
Capacity Correction Factor: 1.82			

	Measured Dose Rate mR/hr				Adjusted Dose Rate mR/hr		
Location	At Surface	Surface Corr. Factor	At 30 Cm [Note 2]	At One Meter	At Surface	At 30 Cm [Note 2]	At One Meter [Note 1]
Top	20	1.09	2.0	.4	40	3.6	.7
Right	11	1.06	1.5	.6	21	2.7	1.1
Front	72	1.06	9.8	1.3	139	17.8	2.4
Left	63	1.06	8.0	.8	122	14.6	1.5
Rear	15	1.06	2.2	.6	29	4.0	1.1
Bottom	25	1.09	2.0	.4	50	3.6	.7
				Acceptance Criteria:	≤ 200	NA	≤ 5.0
				Result: (Check one) Accept	✓	Reject	

Inspector: [signature] Date: 10/18/10 NCR # _____

Comments: Front is forward direction to Serial No.
1 meter and 30 cm Readings are less background of .04
Bottom 1 meter & 30 cm Readings are less background of .10

Notes:
1. Refer to F-Q-1806-1, Shield Efficiency Testing Surface Correction Factors for an existing device model, or F-Q-1806-3, Shield Profile Worksheet forOne meter acceptance limit.
2. The 30cm readings are only required when specifically requested.
3. Additional sheets may be used to describe results or indicate reading locations using sketches. Number all sheets and indicate total number of sheets. Make sure shield Identification is included on each sheet.
4. Attach auto profiler print out to this sheet if used.

Section 6 - CRITICALITY EVALUATION

All parts of this section are not applicable. The Models Sentry 110, Sentry 330 and 867 Transport Packages are not used for shipment of Type B quantities of fissile material.

Section 7 – Package Operations

Operation of the Models Sentry 110, Sentry 330 and 867 Transport Packages must be in accordance with the operating instructions supplied with the transport package, per 10 CFR 71.87 and 71.89.

7.1 Package Loading

7.1.1 Preparation for Loading

The Models Sentry 110, Sentry 330 and 867 transport packages must be loaded and closed in accordance with procedures that, at a minimum, include the requirements specified in this section. Shipment of Type B quantities of radioactive material are authorized for sources specified in Section 7.1.1.1. Maintenance and inspection of these packages is in accordance with the requirements specified in Section 7.1.1.2.

7.1.1.1 Authorized Package Contents

Table 7.1a: Model Sentry 110, Sentry 330 and 867 Package Information

Identification	Nuclide	Source Form	Maximum Capacity	Maximum DU Weight	Maximum Weight
Sentry 110 (Standard)	^{60}Co	Special Form	110 Ci	295 lbs (134 kg)	580 lbs (263 kg)
Sentry 110 (Basic)	^{60}Co	Special Form	110 Ci	295 lbs (134 kg)	500 lbs (227 kg)
Sentry 330 (Standard)	^{60}Co	Special Form	330 Ci	485 lbs (220 kg)	780 lbs (354 kg)
Sentry 330 (Basic)	^{60}Co	Special Form	330 Ci	485 lbs (220 kg)	700 lbs (318 kg)
867 (Standard)	^{60}Co	Special Form	330 Ci	485 lbs (220 kg)	780 lbs (354 kg)
867 (Basic)	^{60}Co	Special Form	330 Ci	485 lbs (220 kg)	700 lbs (318 kg)

7.1.1.2 Packaging Maintenance and Inspection Prior to Loading

7.1.1.2.a Instructions for the Sentry 110 & Sentry 330 Containers

1. Ensure all markings are legible.

2. Inspect the container for signs of significant degradation. Ensure all welds are intact, the container is free of heavy rust and cracks/damage to the steel housing which breaches the container.

3. Assure all bolts and fasteners (hardware) required for assembly of the package and as specified on the drawings referenced on the Type B

transport certificate are fit for use. Without removing the hardware by disassembly from the device, examine the visible external surfaces of the bolts/fasteners for any signs of fatigue cracking.

Note: A visual examination of the bolt/fastener thread condition is performed after removal from the Sentry Style exposure devices as part of the Quarterly and Annual Maintenance inspections required for radiography devices under 10 CFR 34.31 or equivalent Agreement State regulations.

The bolts/fasteners must be replaced if they are no longer fit for use (e.g., threads stripped, unable to fully thread, signs of cracking, etc). Assure the front port is properly secured in accordance with the drawings referenced on the Type B transport certificate.

4. Ensure the shipping cover can be installed and secured over the lock assembly. Ensure the lock plungers operate from the lock to the open positions using the lock plunger key. Ensure that the lock assembly is securely attached to the projector housing with the hardware specified on the drawings referenced on the Type B transport certificate.

5. Assure the front port is functional and can be properly secured in the closed position prior to transport.

6. If the container fails any of the inspections in steps 7.1.1.2.a.1-5, remove the container from use until it can be brought into compliance with the Type B certificate.

7.1.1.2.b Instructions for the 867 Container

1. Ensure all markings are legible.

2. Inspect the container for signs of significant degradation. Ensure all welds are intact, the container is free of heavy rust and cracks/damage to the steel housing which breaches the container.

3. Assure all bolts and fasteners (hardware) required for assembly of the package and as specified on the drawings referenced on the Type B transport certificate are fit for use. Without removing the hardware by disassembly from the device, examine the visible external surfaces of the bolts/fasteners for any signs of fatigue cracking.

   Note: A visual examination of the bolt/fastener thread condition is performed annually by QSA Global, Inc. on the Model 867 source changer lock assemblies.

The bolts/fasteners must be replaced if they are no longer fit for use (e.g., threads stripped, unable to fully thread, signs of cracking, etc). Assure the front port is properly secured in accordance with the drawings referenced on the Type B transport certificate.

4. Ensure the shipping covers can be installed and secured over the lock assemblies. Assure the locking assemblies actuate freely when performing an operational test and that the plunger locks engage and are functional.

5. If the container fails any of the inspections in steps 7.1.1.2.b.1-4, remove the container from use until it can be brought into compliance with the Type B certificate.

7.1.2 Loading of Contents

NOTE: ***These loading operations apply to "dry" loading only. The Model Sentry 110, Sentry 330 & 867 packages are NOT approved for wet loading.***

7.1.2.1 General Pre-transportation Requirements

a. Ensure the contents are authorized for use in the package.

b. Ensure the package condition has been inspected in accordance with Section 7.1.1.2.

c. Ensure that the source(s) are secured into place in the storage positions in accordance with the following requirements. Compliance with the following requirements ensures that the sources are securely locked in position before shipment.

   1. Removal and installation of radioactive material contained within the shield containers must be performed in a shielded cell/enclosure capable of holding the maximum isotope capacity of the container, or by using remote transfer operations for wire mounted sources. Container loading can only be performed by persons specifically authorized under an NRC or Agreement State license (or as otherwise authorized by an International Regulatory Authority).

      All necessary safety precautions and regulations must be observed to ensure safe transfer of the radioactive material.

   2. Model Sentry 110 & Sentry 330 Containers

      i. Using remote handling techniques, load the source assembly so that it is fully retracted into the device shield and secured by the lock

assembly. Once the source is loaded, install the lock cover, ensure the plunger lock is depressed and the key removed.

ii. Ensure all remote handling attachments are removed from the device and the front plate outlet port cover has been rotated back to the closed position (see the drawings referenced on the Type B transport certificate).

3. Model 867 Shield Container

i. Using remote handling techniques, load the source assemblies so that they are fully inserted into the source tubes with the active end of the source assembly inserted first.

ii. Once the source is loaded, install the lock cover, ensure the plunger lock is depressed and the key removed.

iii. Repeat steps 7.1.2.1.c.3.i and ii if a source will be loaded in the second lock assembly of the device. If a second source will not be loaded into the second lock assembly of the device, ensure the lock assembly cover is installed and the plunger lock is depressed and the key removed.

7.1.3 Preparation for Transport

7.1.3.1 Ensure that all conditions of the certificate of compliance are met.

7.1.3.2 Perform a contamination wipe of the outside surface of the package and ensure removable contamination does not exceed 0.0001 μCi when averaged over a wipe area of 300 cm^2.

7.1.3.3 Survey all exterior surfaces of the package to assure that the radiation level does not exceed 200 mR/hr at the surface. Measure the radiation level at one meter from all exterior surfaces to assure that the radiation level is less than 10 mR/hr.

7.1.3.4 Ship the container according to the procedure for transporting radioactive material as established in 49 CFR 171-178.

NOTE: The US Department of Transportation, in 49 CFR 173.22(c), requires each shipper of Type B quantities of radioactive material to provide prior notification to the consignee of the dates of shipment and expected arrival.

7.2 Package Unloading

7.2.1 Receipt of Package from Carrier

7.2.1.1 The consignee of a transport package of radioactive material must make arrangements to receive the transport package when it is delivered. If the transport package is to be picked up at the carrier's terminal, 10 CFR 20.1906 requires that this be done expeditiously upon notification of its arrival.

7.2.1.2 Upon receipt of a transport package of radioactive material:

a. Survey the transport package with a survey meter as soon as possible, preferably at the time of pick-up and no more than three hours after it was received during normal working hours. Radiation levels should not exceed 200 mR/hr at the surface of the transport package, nor 10 mR/hr at a distance of 1 meter from the surface.

b. Record the actual radiation levels on the receiving report.

c. If the radiation levels exceed these limits, secure the container in a Restricted Area and notify the appropriate personnel in accordance with 10 CFR 20 or applicable Agreement State regulations.

d. Inspect the outer container for physical damage or leaking. If the package is damaged or leaking or it is suspected that the package may have leaked or been damaged, restrict access to the package. As soon as possible, contact the Radiation Safety Office to perform a full assessment of the package condition and take necessary follow-up actions.

e. Record the radioisotope, activity, model number, and serial number of the source and the transport package model number and serial number.

7.2.2 Removal of Contents

Transfer the package to a remote handling cell, or prepare the package for source transfer/exposure in accordance with the applicable licensing provisions for the user's facility related to radioactive material handling. Remove the sealed source assembly(ies) from the package and transfer to an alternate shielded storage location.

7.3 Preparation of Empty Package for Transport

In the following instructions, an *empty* transport package refers to a Model Sentry 110, Sentry 330 or 867 transport package without an active source contained within the shielded container. To ship an empty transport package:

7.3.1. Unload the container in accordance with Section 7.2.2.

7.3.2 Assure that the levels of removable radioactive contamination on the outside surface of the transport package does not exceed 4 Bq/cm^2 (when averaged over 300 cm^2).

7.3.3 Assure that the levels of removable radioactive contamination on the inside surface of the shield container does not exceed 400 Bq/cm^2 (when averaged over 300 cm^2).

7.3.4 When it is confirmed that the Models Sentry 110, Sentry 330 and 867 Transport Packages are empty, prepare the transport package for shipment and survey to determine ensure the external surface radiation level does not exceed 5 μSv/h.

7.4 Other Operations

7.4.1 Package Transportation By Consignor

Persons transporting the Model Sentry 110, Sentry 330 or 867 package in their own conveyances should comply with the following:

7.3.1.1 For a conveyance and equipment used regularly for radioactive material transport, check to determine the level of contamination that may be present on these items. This contamination check is suggested if the package shows signs of damage upon receipt or during transport, or if a leak test on the special form source transported in the package exceeds the allowable limit of 185 Bq.

7.4.1.2 If contamination above 4 Bq/cm^2 (when averaged over 300 cm^2) is detected on any part of a conveyance or equipment used regularly for radioactive material transport, or if a radiation level exceeding 5 μSv/h is detected on any conveyance or equipment surface, then remove the affected item from use until decontaminated or decayed to meets these limits.

7.4.2 Emergency Response

In the event of a transport emergency or accident involving this package, follow the guidance contained in "2008 Emergency Response Guidebook: A Guidebook for First Responders During the Initial Phase of a Dangerous Goods/Hazardous Materials Incident", or equivalent guidance documentation.

7.5 Appendix

7.5.1 Reference: "2008 Emergency Response Guidebook: A Guidebook for First Responders During the Initial Phase of a Dangerous Goods/Hazardous Materials Incident"

Section 8 - ACCEPTANCE TESTS AND MAINTENANCE PROGRAM

8.1 Acceptance Test

8.1.1 Visual Inspections and Measurements

Each transport package component is inspected visually prior to shipment for compliance to the following criteria:

8.1.1.1 The transport package was assembled properly to the applicable drawing.

8.1.1.2 Evaluate each shield container for shielding integrity when used in the applicable Model Sentry 110, Sentry 330 or 867 assembly to ensure the transport dose rate requirements are met when the container is loaded to capacity.

8.1.1.3 All fasteners as required by the applicable drawings are properly installed and secured.

8.1.1.4 The relevant labels are attached, contain the required information, and are marked in accordance with 10 CFR 20.1904, 10 CFR 40.13(c)(6)(i), 10 CFR 34, and 10 CFR 71 or equivalent Agreement State regulations.

Visual inspections and measurements will be performed in accordance with QSA Global, Inc.'s USNRC approved Quality Assurance Program No. 0040.

8.1.2 Weld Examinations

Weld examinations will be performed in accordance with the applicable drawings requirements and in accordance with QSA Global, Inc.'s USNRC approved Quality Assurance Program No. 0040.

8.1.3 Structural and Pressure Tests

Prior to first use as part of a Models Sentry 110, Sentry 330 and 867 Transport Packages, container structural conformance will be evaluated in accordance with the applicable drawings requirements and in accordance with QSA Global, Inc.'s USNRC approved Quality Assurance Program No. 0040. The containment system is not designed to require increased or decrease operating pressures to maintain containment during transport, therefore pressure tests of package components prior to first use is not required.

8.1.4 Leakage Tests

The source capsules (primary containment) are wipe tested for leakage of radioactive contamination upon initial manufacture. The removable contamination must be less than 0.005 microcuries. The source capsules will also be subjected to leak tests under ISO9978:1992(E) (or more recent editions). The source capsules are not used if they fail any of these tests.

8.1.5 Component and Material Tests

Component and material compliance is achieved in accordance with the requirements in QSA Global, Inc.'s USNRC approved Quality Assurance Program No. 0040.

8.1.6 Shielding Tests

The radiation levels at the surface of the Model Sentry 110, Sentry 330 and 867 and at 1 meter from the surface of these packages (in the Basic Configuration) are evaluated prior to first transport. This survey, performed in a low background area involved a slow scan survey of the entire surface area as well as one meter from the surface of the container. This survey is used to identify any significant void volumes or shield porosity which could prevent the finished device from from complying with the dose limits in 10 CFR 71.47.

This radiation profile is performed at the time of manufacture of the Model Sentry 110, Sentry 330 and 867 containers. The radiation profile survey is made with the radiation detector housing in contact with the surface of the container and then also at one meter from the surface of the container. The maximum radiation levels, when extrapolated to the rated capacity of the transport package, can not exceed 200 mR/hr at the surface, nor 10 mR/hr at 1 meter from the surface of the transport package. Since the Models Sentry 110 and Sentry 330 also functions as radiography exposure devices, the maximum allowed dose rate at one meter from the surface of these devices is further limited to 5 mR/hr at the time of manufacture.

Failure of the radiation profile tests for any Model Sentry 110, Sentry 330 or 867 container indicates the potential of significant shielding porosity and this will cause the rejection of the affected Model Sentry 110, Sentry 330 or 867 package as a Type B container. Rejected packages which do not comply with the construction requirements on the applicable drawings referenced on the Type B certificate, or that do not comply with the radiation profile requirements will not distributed as approved Type B(U) packages.

8.1.7 Thermal Tests

Not applicable. The source content of the Model Sentry 110, Sentry 330 and 867 packages has minimal effect on the package surface temperature and therefore no additional testing is necessary to evaluate thermal properties of the packaging.

8.1.8 Miscellaneous Tests

Not applicable.

8.2 Maintenance Program

8.2.1 Structural and Pressure Tests

Not applicable. Material certification is obtained for Safety Class A components used in the transport package prior to their initial use. Based on the construction of the design, no additional structural testing during the life of the package is necessary if the container shows no signs of defect when prepared for shipment in accordance with the requirements of Section 7 of the SAR. The Model Sentry 110, Sentry 330 and 867 packaging systems are not designed to require increased or decreased operating pressures to maintain containment during transport, therefore pressure tests of package components prior to individual shipment is not required.

8.2.2 Leakage Tests

As described in Section 8.1.4, "Leakage Tests," the radioactive source assembly is leak-tested at manufacture. In addition, the sources are leak tested in accordance with that Section at least once every six months thereafter if being transported to ensure that removable contamination is less than 0.005 microcuries.

8.2.3 Component and Material Tests

The transport package is inspected for tightness of fasteners, proper seal wires, and general condition prior to each use as described in Section 7 of this SAR. No additional component or material testing is required prior to shipment.

8.2.4 Thermal Tests

Not applicable. The source content of the Model Sentry 110, Sentry 330 and 867 packages has minimal effect on the package surface temperature and therefore no additional testing is necessary to evaluate thermal properties of the packaging prior to shipment.

8.2.5 Miscellaneous Tests

Inspections and tests designed for secondary users of this transport package under the general license provisions of 10 CFR 71.17(b) are provided in Section 7.

8.3 Appendix

Not applicable.

Section 9 – Quality Assurance

9.1 U.S. Quality Assurance Program Requirements

All component fabrication (including assembly) is controlled under the QSA Global, Inc. Quality Assurance program approved by the USNRC (approval number 0040) and ISO 9001.

9.2 Canada Quality Assurance Program Requirements

Not applicable. This package is originally submitted for certification in the United States and complies with the criteria in Section 9.1.

9.3 Appendix

Not applicable.