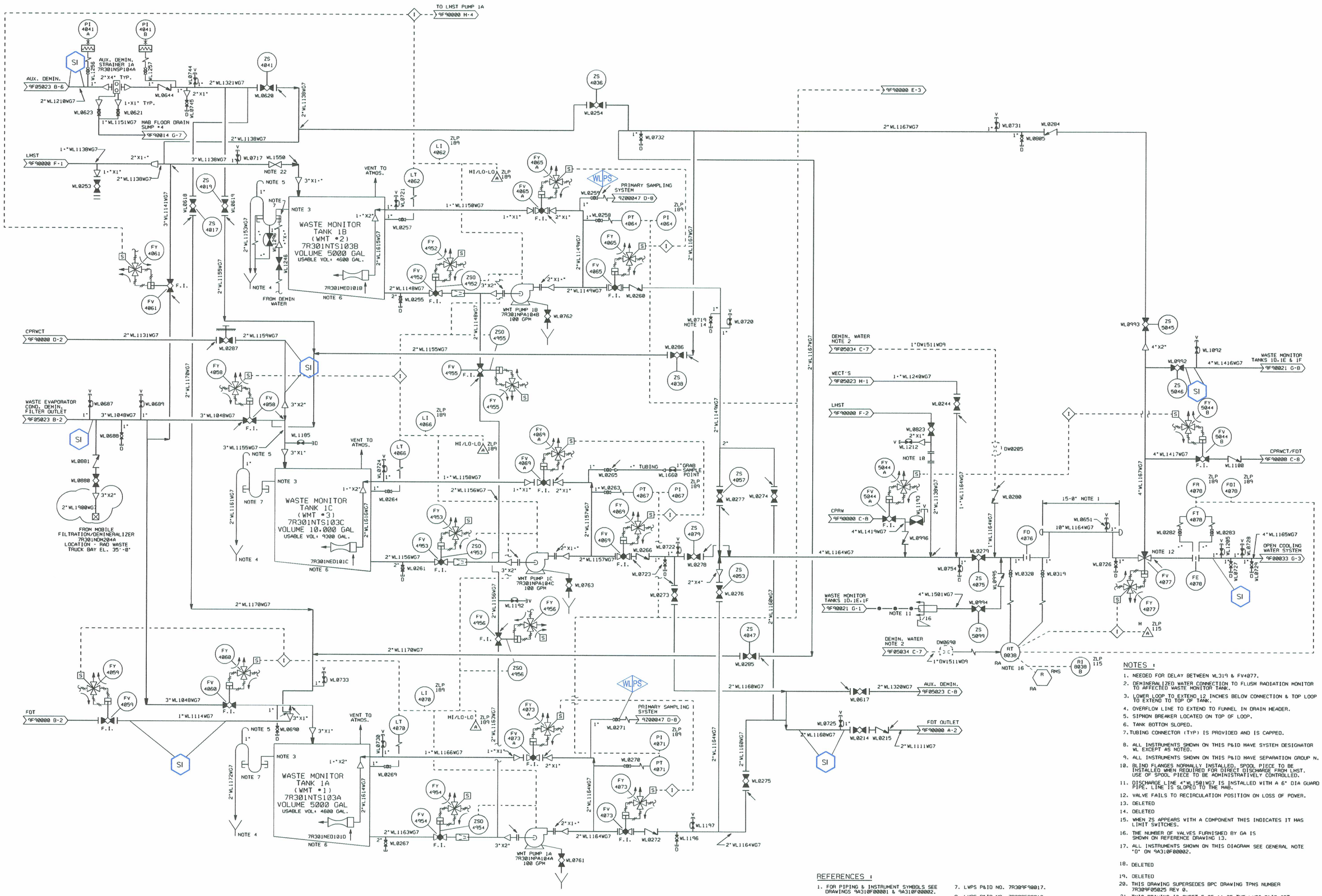

NOTES :

1. NEEDED FOR DELAY BETWEEN WL319 & FV4077.
2. DEMINERALIZED WATER CONNECTION TO FLUSH RADIATION MONITOR TO AFFECTED WASTE MONITOR TANK.
3. LOWER LOOP TO EXTEND 12 INCHES BELOW CONNECTION & TOP LOOP TO EXTEND TO TOP OF TANK.
4. OVERFLOW LINE TO EXTEND TO FUNNEL IN DRAIN HEADER.
5. SIPHON BREAKER LOCATED ON TOP OF LOOP.
6. TANK BOTTOM SLOPED.
7. TUBING CONNECTOR (TYP) IS PROVIDED AND IS CAPPED.
8. ALL INSTRUMENTS SHOWN ON THIS P&ID HAVE SYSTEM DESIGNATOR WL EXCEPT AS NOTED.
9. ALL INSTRUMENTS SHOWN ON THIS P&ID HAVE SEPARATION GROUP N.
10. BLIND FLANGES NORMALLY INSTALLED. SPOOL PIECE TO BE INSTALLED WHEN REQUIRED FOR DIRECT DISCHARGE FROM LHST. USE OF SPOOL PIECE TO BE ADMINISTRATIVELY CONTROLLED.
11. DISCHARGE LINE 4"WL1501WG7 IS INSTALLED WITH A 6" DIA GUARD PIPE. LINE IS SLOPED TO THE MAB.
12. VALVE FAILS TO RECIRCULATION POSITION ON LOSS OF POWER.
13. DELETED
14. DELETED
15. WHEN ZS APPEARS WITH A COMPONENT THIS INDICATES IT HAS LIMIT SWITCHES.
16. THE NUMBER OF VALVES FURNISHED BY GA IS SHOWN ON REFERENCE DRAWING 13.
17. ALL INSTRUMENTS SHOWN ON THIS DIAGRAM SEE GENERAL NOTE "D" ON 9A310F00002.
18. DELETED
19. DELETED
20. THIS DRAWING SUPERSEDES BPC DRAWING TPNS NUMBER 7R309F05025 REV 0.
21. THIS DRAWING IS SHEET 5 OF 11 OF THE LWPS P&ID SET. SEE REFERENCE 2 THROUGH 11 FOR OTHER LWPS P&ID SET DRAWINGS.
22. VALVE EQUIPPED WITH CHAIN OPERATED HANDWHEEL

REFERENCES :

1. FOR PIPING & INSTRUMENT SYMBOLS SEE DRAWINGS 9A310F00001 & 9A310F00002.
2. LWPS P&ID NO. 5R309F05022.
3. LWPS P&ID NO. 7R309F05023.
4. LWPS P&ID NO. 7R309F05024.
5. LWPS P&ID NO. 7R309F05026.
6. LWPS P&ID NO. 7R309F90000.
7. LWPS P&ID NO. 7R309F90017.
8. LWPS P&ID NO. 7R309F90018.
9. LWPS P&ID NO. 7R309F90020.
10. LWPS P&ID NO. 7R309F90021.
11. LWPS P&ID NO. 7R309F90022.
12. LWPS P&ID NO. 5R309F05027.
13. GENERAL ATOMIC DWG NO. 0392-1001(L10)SHT.24 (4301-0028(DW. 8301-0027(DW).

LR BOUNDARY DRAWING NO.	REV
LR-STP-WL-7R309F90001#1	0B

NO.	ISSUE DATE	REVISION	ORIG	CKR	RE	DV	SE
0-14	4-27-83	ISSUED FOR CONSTRUCTION.					

SOUTH TEXAS PROJECT NUCLEAR OPERATING COMPANY

PIPING & INSTRUMENTATION DIAGRAM
LIQUID WASTE PROCESSING SYSTEM

PRIORITY	CADD FILE NO.	FSUG. NO.	STI. NO.	SCALE	DWG. NO.	SHT.	REV.
1	FJA174.151	D070928		NONE	7R309F90001#1	1	15

ESEED.DGN

D324