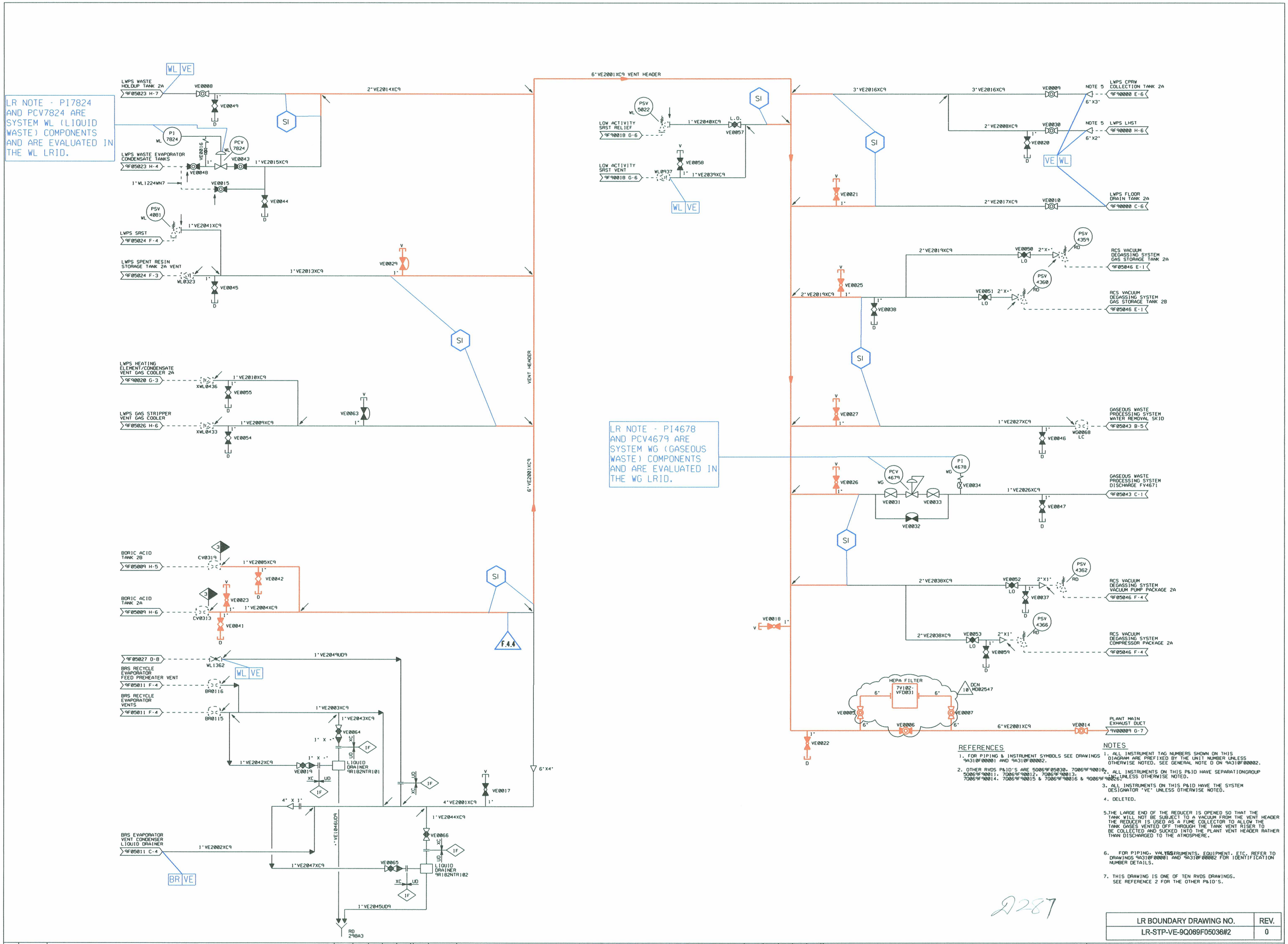

REFERENCES

1. FOR PIPING & INSTRUMENT SYMBOLS SEE DRAWINGS 9A310F00001 AND 9A310F00002.
2. OTHER RVDS P&ID'S ARE 5006 9F05030, 7006 9F90010, 5006 9F90011, 7006 9F90012, 7006 9F90013, 7006 9F90014, 7006 9F90015 & 7006 9F90016 & 9006 9F90026.

NOTES

1. ALL INSTRUMENT TAG NUMBERS SHOWN ON THIS DIAGRAM ARE PREFIXED BY THE UNIT NUMBER UNLESS OTHERWISE NOTED. SEE GENERAL NOTE O ON 9A310F00002.
2. ALL INSTRUMENTS ON THIS P&ID HAVE SEPARATIONGROUP 2W UNLESS OTHERWISE NOTED.
3. ALL INSTRUMENTS ON THIS P&ID HAVE THE SYSTEM DESIGNATOR 'VE' UNLESS OTHERWISE NOTED.
4. DELETED.
5. THE LARGE END OF THE REDUCER IS OPENED SO THAT THE TANK WILL NOT BE SUBJECT TO A VACUUM FROM THE VENT HEADER THE REDUCER IS USED AS A FUME COLLECTOR TO ALLOW THE TANK GASES VENTED OFF THROUGH THE TANK VENT RISER TO BE COLLECTED AND SUCKED INTO THE PLANT VENT HEADER RATHER THAN DISCHARGED TO THE ATMOSPHERE.
6. FOR PIPING, VALVES, INSTRUMENTS, EQUIPMENT, ETC. REFER TO DRAWINGS 9A310F00001 AND 9A310F00002 FOR IDENTIFICATION NUMBER DETAILS.
7. THIS DRAWING IS ONE OF TEN RVDS DRAWINGS. SEE REFERENCE 2 FOR THE OTHER P&ID'S.

2287

LR BOUNDARY DRAWING NO.	REV.
LR-STP-VE-9Q089F05036#2	0

NO.	ISSUE DATE	REVISION	ORIG	CKR	RE	DV	SE
10		HL&P ASSUMES DESIGN CHANGE CONTROL. INCORP. DCN MD02547 & EDITORIAL CHANGES FOR UNITIZATION	KS				
0-9	12-03-82	ISSUED FOR CONSTRUCTION	SIGNATURES ON FILE				

NO.	ISSUE DATE	REVISION	ORIG	CKR	RE	DV	SE

SOUTH TEXAS PROJECT
NUCLEAR OPERATING COMPANY

PIPING & INSTRUMENTATION DIAGRAM
RADIOACTIVE VENT AND DRAIN SYSTEM
RADIOACTIVE VENT HEADER

PRIORITY	CADD FILE NO.	FSUG. NO.	STI. NO.	SCALE	DWG. NO.	SHT.	REV.
1	FJA563.101			NTS	9006 9F05036 *2		10

KVS

FJA563.101