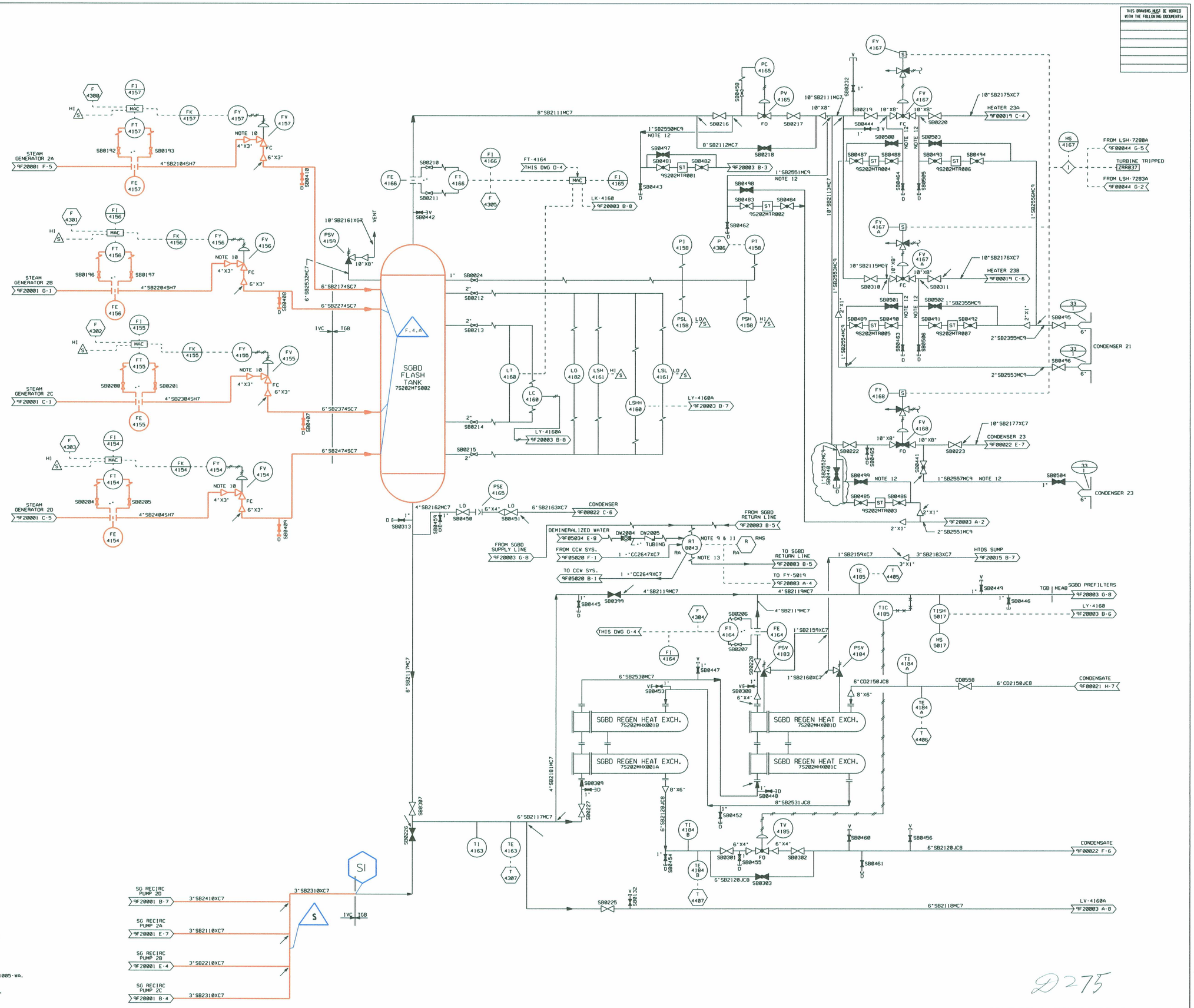

NOTES:

1. REFER TO DRAWINGS 9A310F00001 AND 9A310F00002 FOR IDENTIFICATION NUMBER DETAILS.
2. SYSTEM DESIGNATOR FOR THIS DRAWING IS SB. UNLESS OTHERWISE NOTED.
3. DELETED.
4. ALL INSTRUMENTS SHOWN ON THIS DIAGRAM HAVE SEPARATION GROUP N. EXCEPT WHERE NOTED OTHERWISE.
5. FOR P&ID STANDARDS AND SYMBOLS. REFER TO 0F00001 & 0F00002.
6. DELETED.
7. SEQUENCE CONTROL REF. DWG - LATER.
8. RCU IS THE REMOTE CONTROL UNIT FOR IE RITS. IT IS LOCATED IN RMS CONTROL ROOM CABINET.
9. RT-8043 PROVIDES LOCAL ALARM AND INDICATION.
10. VALVE TO BE LOCATED AT LOW POINT.
11. RT-8043 INCLUDES HEAT EXCHANGER.
12. PIPING TO BE HORIZONTAL & DOWN IN THE DIRECTION OF FLOW. THE PIPING ARRANGEMENT SHALL NOT INCLUDE LOOPS OR POCKETS.
13. TAG NUMBERS OF VALVES FURNISHED BY GENERAL ATOMIC IS SHOWN ON REF # 2.

REFERENCES:

1. CONDENSER OUTLINE DRAWINGS. LOG NUMBERS 14926-01001-WA THRU -01005-WA.4001-01001-WA THRU 01005-WA.
2. GENERAL ATOMIC DWG NO. 0392-1001 (LIQ W/HX). SHT 22. (4301-00279-0W. 8301-00271-OW).

D275

LR BOUNDARY DRAWING NO.	REV.
LR-STP-SB-5S209F20002#2	0

NO.	ISSUE DATE	REVISION	ORIG	CKR	RE	DV	SE	NO.	ISSUE DATE	REVISION	ORIG	CKR	RE	DV	SE
15		INCORP. DCN 9704267.	JSH												
0-14	2-24-83	ISSUED FOR CONSTRUCTION	SIGNATURES ON FILE												

SOUTH TEXAS PROJECT
NUCLEAR OPERATING COMPANY

PIPING AND INSTRUMENTATION DIAGRAM
STEAM GENERATOR BLOWDOWN SYSTEM

PRIORITY	RMSECM NO.	DOC.CTL.NO.	CADD FILE NO.	SCALE	DWG. NO.	REV.
1	5S209F20002*2	D070928	FJA572.151	NONE	5S209F20002*2	15

ESEED.DGN