TABLE 2

PSV	7410	7410A	7410B	7410C	7410D	7420	7420A	7420B	7420C	7420D	7430	7430A	7430B	7430C	7430D	7440	7440A	7440B	7440C	7440D
ZE	7410	7410A	7410B	7410C	7410D	7420	7420A	7420B	7420C	7420D	7430	7430A	7430B	7430C	7430D	7440	7440A	7440B	7440C	7440D
ZT	7410	7410A	7410B	7410C	7410D	7420	7420A	7420B	7420C	7420D	7430	7430A	7430B	7430C	7430D	7440	7440A	7440B	7440C	7440D
ZY	7410	7410A	7410B	7410C	7410D	7420	7420A	7420B	7420C	7420D	7430	7430A	7430B	7430C	7430D	7440	7440A	7440B	7440C	7440D
ERF DAQS I/O	MSZD7410	MSZD7410A	MSZD7410B	MSZD7410C	MSZD7410D	MSZD7420	MSZD7420A	MSZD7420B	MSZD7420C	MSZD7420D	MSZD7430	MSZD7430A	MSZD7430B	MSZD7430C	MSZD7430D	MSZD7440	MSZD7440A	MSZD7440B	MSZD7440C	MSZD7440D

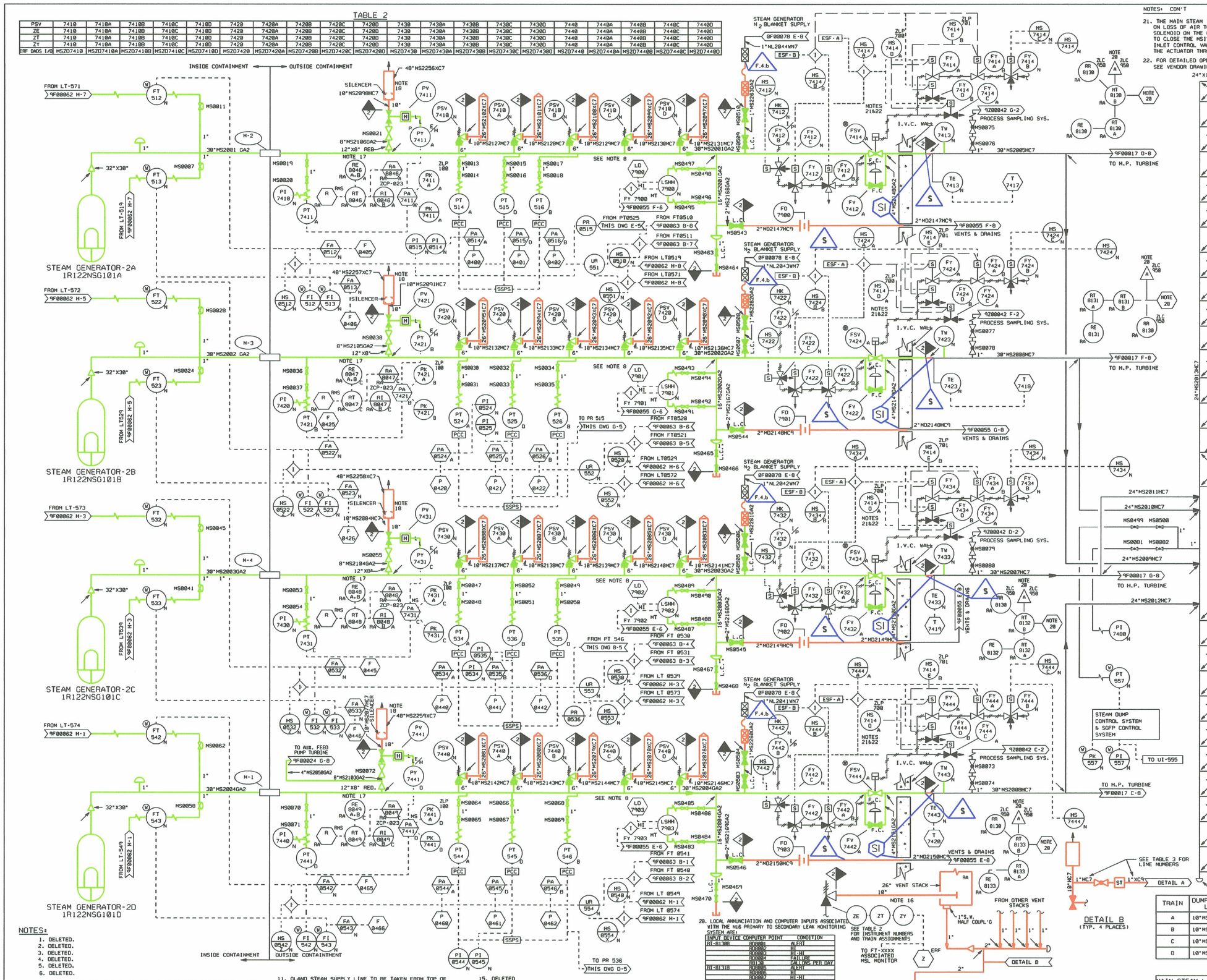

NOTES:

1. DELETED.
2. DELETED.
3. DELETED.
4. DELETED.
5. DELETED.
6. DELETED.
7. DRAIN LINES FROM SAFETY RELIEF AND POWER OPERATED RELIEF VALVES SHALL BE PIPED TO A COMMON DRAIN HEADER. AND THE HEADER SHALL BE PIPED TO A FLOOR DRAIN. SEE DETAIL "A" AND TABLE 1 FOR DRAIN LINE NUMBERS.
8. MAIN STEAM PIPING IN I.V.C. MUST MEET SUPERPIPE CRITERIA.
9. WESTINGHOUSE RECOMMENDATIONS TO MINIMIZE WATER DAMAGE TO STEAM TURBINES IN NUCLEAR PLANTS HAVE BEEN INCORPORATED. (REF. WESTINGHOUSE STEAM TURBINE INFORMATION CT-2393, MARCH.1977). (4003-17-01409 WT).
10. MINIMUM RECOMMENDED SLOPE OF MAIN STEAM PIPING IS 6 INCHES PER 100 FEET. NORMALLY IN THE DIRECTION OF FLOW HOWEVER, ACTUAL PIPE SLOPE SHALL BE AS SHOWN ON ISOMETRIC DRAWINGS.
11. GLAND STEAM SUPPLY LINE TO BE TAKEN FROM TOP OF MAIN STEAM HEADER (E-2).
12. SGFP TURBINE SUPPLY LINES TO BE TAKEN FROM TOP OF MAIN STEAM HEADER (F-2,G-2,H-2).
13. ALL INSTRUMENTS ON THIS DIAGRAM HAVE SYSTEM DESIGNATOR MS UNLESS OTHERWISE NOTED.
14. FOR PIPING,VALVES,INSTRUMENTS,EQUIPMENT,ETC. REFER TO DRAWINGS 9A310F00001 AND9A310F00002 FOR IDENTIFICATION NUMBER DETAILS.
15. DELETED
16. TYPICAL FOR ALL MAIN STEAM PSV'S.
17. RE'S (MAIN STEAM LINE RADIATION DETECTORS) ARE MOUNTED ADJACENT TO MAIN STEAM LINE. RT (MICROPROCESSOR) IS MOUNTED OUTSIDE OF IVC.
18. PROVIDE "•" WEEP HOLE MINIMUM DISTANCE FROM EXHAUST SIDE OF THE PORV DISCHARGE PIPING AND ONE "•" MIN. DIAMETER WEEP HOLE IN THE STACK POSITIONED FACING THE ROOF RUN-OFF (NORTH).
19. "N" SYSTEM DESIGNATOR IS <NIMS01>
20. LOCAL ANNUNCIATION AND COMPUTER INPUTS ASSOCIATED WITH THE N16 PRIMARY TO SECONDARY LEAK MONITORING SYSTEM ARE:

INPUT DEVICE	COMPUTER POINT	CONDITION
RY-8130B	RD8081	ALERT
	RD8082	NI
	RD8083	NI-HI
	RD8084	FAILURE
	RB134	GALLONS PER DAY
RY-8131B	RD8085	ALERT
	RD8086	NI
	RD8087	NI-HI
	RD8088	FAILURE
	RB141	GALLONS PER DAY
RY-8132B	RD8089	ALERT
	RD8090	NI
	RD8091	NI-HI
	RD8092	FAILURE
	RB132	GALLONS PER DAY
RY-8133B	RD8093	ALERT
	RD8094	NI
	RD8095	NI-HI
	RD8096	FAILURE
	RB133	GALLONS PER DAY

21. THE MAIN STEAM ISOLATION VALVES FAIL CLOSED ON LOSS OF AIR TO THE ACTUATOR. THE PILOT AIR SOLENOID ON THE MSIV ACTUATOR ARE ENERGIZED TO CLOSE THE MSIV BY SHUTTING SUPPLY AIR TO THE INLET CONTROL VALVE AND RELEASING AIR FROM THE ACTUATOR THROUGH THE DUMP VALVE.
22. FOR DETAILED OPERATION OF THE MSIV. SEE VENDOR DRAWING 0223-0200015WN.

TABLE 3

TRAIN	DUMP VALVE LINE	DRAIN LINE	VALVE NUMBER	STEAM TRAP NO.	DRAIN LINE
A	10"MS2098HC7	1"MS2552HC7	MS608	9S102MTR001	1"MS2209XC9
B	10"MS2091HC7	1"MS2553HC7	MS609	9S102MTR002	1"MS2222XC9
C	10"MS2084HC7	1"MS2554HC7	MS610	9S102MTR003	1"MS2235XC9
D	10"MS2084HC7	1"MS2555HC7	MS611	9S102MTR004	1"MS2248XC9

TABLE 1

	MAIN STEAM LINE 30"MS2001HC7	MAIN STEAM LINE 30"MS2002HC7	MAIN STEAM LINE 30"MS2003HC7	MAIN STEAM LINE 30"MS2004HC7
VENT STACK (V.S.) DRAIN HEADER	2"MS2203XC9	2"MS2216XC9	2"MS2229XC9	2"MS2242XC9
V.S. DRAINS FOR PSV 7410-7440	1"MS2204XC9	1"MS2217XC9	1"MS2230XC9	1"MS2243XC9
V.S. DRAINS FOR PSV 7410A-7440A	1"MS2205XC9	1"MS2218XC9	1"MS2231XC9	1"MS2244XC9
V.S. DRAINS FOR PSV 7410B-7440B	1"MS2206XC9	1"MS2219XC9	1"MS2232XC9	1"MS2245XC9
V.S. DRAINS FOR PSV 7410C-7440C	1"MS2207XC9	1"MS2220XC9	1"MS2233XC9	1"MS2246XC9
V.S. DRAINS FOR PSV 7410D-7440D	1"MS2208XC9	1"MS2221XC9	1"MS2234XC9	1"MS2247XC9
V.S. DRAINS HEADER TO FLOOR HUB	2"MS2209XC9	2"MS2222XC9	2"MS2235XC9	2"MS2248XC9

ESSED DCN

NO.	ISSUE DATE	REVISION	ORIG	CKR	RE	DV	SE
30	4-20-06	REVISED PER CR* 06-5085-2.	JSH	ON FILE			
29	11-14-05	INCORP. DCN 0501571.	LNB	ON FILE			
28	9-12-05	INCORP. DCN 0301110.	VJM	ON FILE			
27	11-15-02	INCORP. DCN 0200023, 0200024, 0200025, 0200026, 0200027, 0200028, 0200029 0200030, 0200031, 0200032, 0200033 AND 0200034.	VJM	ON FILE			
0-26	10-29-82	ISSUED FOR CONSTRUCTION.	SIGNATURES ON FILE.				

NO.	ISSUE DATE	REVISION	ORIG	CKR	RE	DV	SE
32		REVISED PER CR 06-16756.	VJM				
31	6-8-06	REVISED PER CR* 06-6816-1.	JGL	ON FILE			

SOUTH TEXAS PROJECT NUCLEAR OPERATING COMPANY

PIPING & INSTRUMENTATION DIAGRAM MAIN STEAM

PRIORITY	CADD FILE NO.	FSUG. NO.	STI. NO.	SCALE	DWG. NO.	SMT.	REV.
1	FJA582.321	D070928		NONE	5S109F00016*2		32

LR BOUNDARY DRAWING NO.	REV.
LR-STP-MS-5S109F00016#2	0A

8221