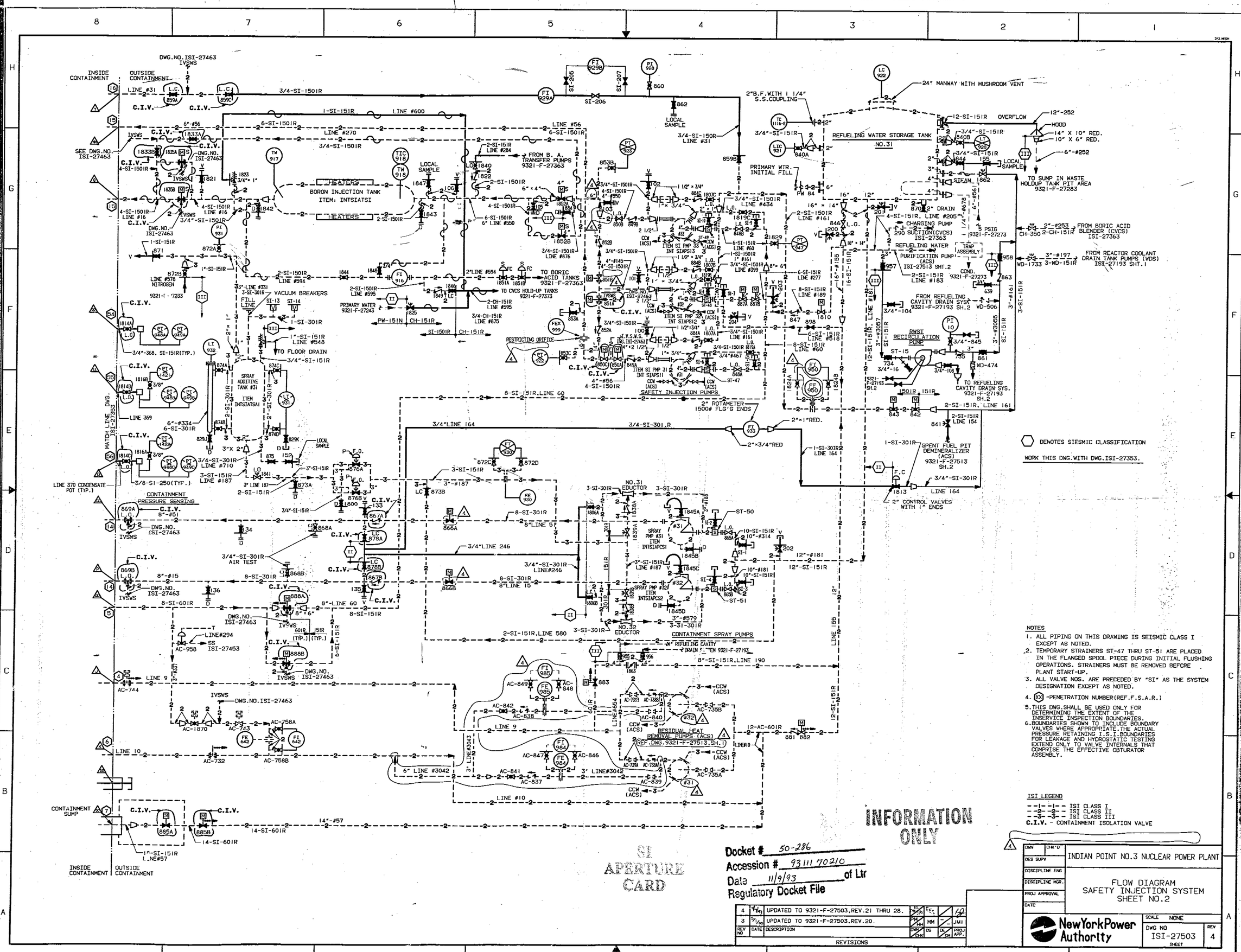

NOTES

1. ALL PIPING ON THIS DRAWING IS SEISMIC CLASS I EXCEPT AS NOTED.
2. TEMPORARY STRAINERS ST-47 THRU ST-51 ARE PLACED IN THE FLANGED SPOOL PIECE DURING INITIAL FLUSHING OPERATIONS. STRAINERS MUST BE REMOVED BEFORE PLANT START-UP.
3. ALL VALVE NOS. ARE PRECEDED BY "SI" AS THE SYSTEM DESIGNATION EXCEPT AS NOTED.
4. (XX) =PENETRATION NUMBER(REF.F.S.A.R.)
5. THIS DWG.SHALL BE USED ONLY FOR DETERMINING THE EXTENT OF THE INSERVICE INSPECTION BOUNDARIES.
6. BOUNDARIES SHOWN TO INCLUDE BOUNDARY VALVES WHERE APPROPRIATE.THE ACTUAL PRESSURE RETAINING I.S.I.BOUNDARIES FOR LEAKAGE AND HYDROSTATIC TESTING EXTEND ONLY TO VALVE INTERNALS THAT COMPRISE THE EFFECTIVE OBTURATOR ASSEMBLY.

ISI LEGEND

--1--1-- ISI CLASS I
--2--2-- ISI CLASS II
--3--3-- ISI CLASS III
C.I.V. - CONTAINMENT ISOLATION VALVE

INFORMATION ONLY

SI APERTURE CARD

Docket # 50-286
Accession # 9311170210
Date 11/9/93 of Ltr
Regulatory Docket File

REV NO	DATE	DESCRIPTION	DWN	CHK	DES	DE	PROJ APP.
4	4/1/91	UPDATED TO 9321-F-27503,REV.21 THRU 28.					
3	5/1/90	UPDATED TO 9321-F-27503,REV.20.		MM		JMI	

REVISIONS

DES SUPV
DISCIPLINE ENG
DISCIPLINE MGR.
PROJ APPROVAL
DATE

INDIAN POINT NO.3 NUCLEAR POWER PLANT

FLOW DIAGRAM
SAFETY INJECTION SYSTEM
SHEET NO.2

NewYorkPower Authority

SCALE NONE
DWG NO ISI-27503 SHEET
REV 4

9311170221-05