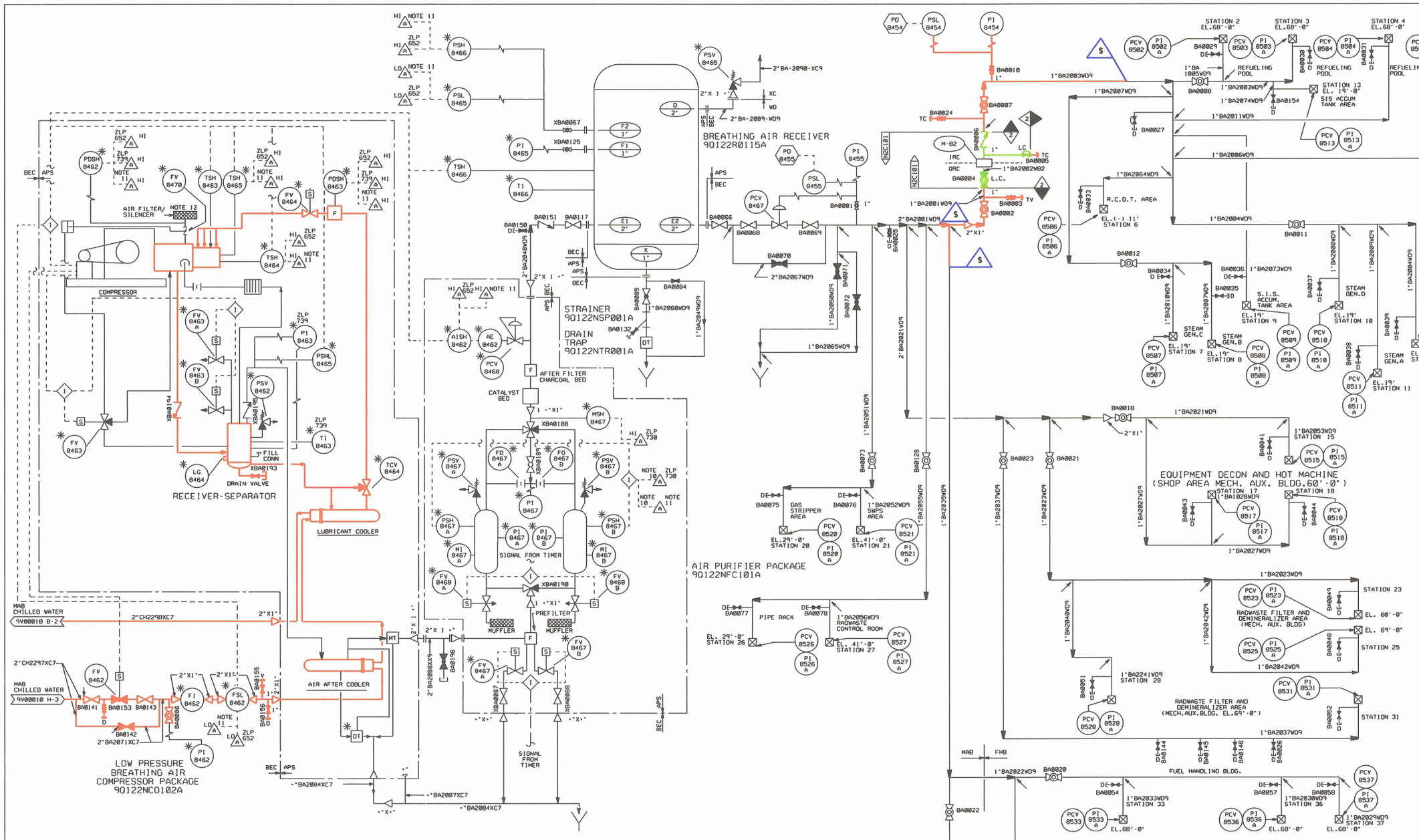

B.A. STN. NO.	BLDG.	ELEVATION	NEAREST COLUMN	ANGLE/ DISTANCE FROM REACTOR CENTER
1				
2	RCB	68'-0"	-	237°-40'
3	RCB	68'-0"	-	245°-35'
4	RCB	68'-0"	-	66°-46'
5	RCB	68'-0"	-	109°-75'
6	RCB	(-)11'-0"	-	102°-57'
7	RCB	19'-0"	-	9°-45'
8	RCB	19'-0"	-	352°-45'
9	RCB	19'-0"	-	43°-65'
10	RCB	19'-0"	-	188°-45'
11	RCB	19'-0"	-	156°-45'
12	RCB	(-) 5'-3"	-	196°-52'
13	RCB	19'-0"		278°
14				-
15	MAB	60'-0"	G-25	-
16				-
17	MAB	60'-0"	G-26	-
18	MAB	60'-0"	E-26	-
19				-
20	MAB	29'-0"	C-32	-
21	MAB	41'-0"	C-31	-
22				-
23	MAB	60'-0"	E-32	-
24				-
25	MAB	69'-0"	F.8-31	-
26	MAB	29'-0"	H-25	-
27	MAB	41'-0"	G-25	-
28	MAB	69'-0"	F.3-29	-
29				-
30				-
31	MAB	69'-0"	H-31	-
32				-
33	FHB	68'-0"	R-27	-
34				-
35				-
36	FHB	68'-0"	T-30	-
37	FHB	68'-0"	T-30.9	-
38				-
39	MAB	10'-0"	E-29	-
40	MAB	10'-0"	D-31	-
41	MAB	10'-0"	C-29	-
42	MAB	10'-0"	D-27	-
43				-
44	MAB	10'-0"	F.8-29	-
45	MAB	10'-0"	G-31	-
46	FHB	21'-11"	N-30.2	-
47	FHB	(-)21'-0"	N-28	-
48	FHB	(-)21'-0"	R1-28	-
49	FHB	(-)21'-0"	T5-28	-
50	FHB	(-)21'-0"	R1-30.2	

NOTES

1. ALL INSTRUMENT TAG NUMBERS SHOWN ON THIS DIAGRAM ARE PREFIXED BY THE UNIT NUMBER 2. UNLESS OTHERWISE NOTED. SEE GENERAL NOTE D ON 0F00002.
2. ☒ INDICATES MANIFOLD STATION CONSISTING OF 5 AIR HOSE CONNECTIONS - SURVIV - AIR MODEL NO.9600-55 OR EQUIVALENT AND ONE FIVE MAN PRESSURE REGULATOR - SURVIV - AIR MODEL NO. 9120-04 OR EQUIVALENT.
3. DELETED.
4. DRAINS TO BE LOCATED AT LOW POINTS.
5. ALL INSTRUMENTS ON THIS P&ID HAVE SYSTEM DESIGNATOR BA UNLESS OTHERWISE NOTED.
6. ALL INSTRUMENTS ON THIS P&ID HAVE SEPARATION GROUP N.
7. DELETED.
8. REFER TO DRAWINGS 9A310F00001 AND 9A310F00002 FOR IDENTIFICATION NUMBER DETAILS.
9. DELETED.
10. DRYER SWITCHING FAILURE ALARM.
11. LOW PRESSURE BREATHING AIR SYSTEM TROUBLE ALARM. COMMON ALARM LOCATED IN ZCP822.
12. MAB SUPPLY HVAC TO BE USED TO SUPPLY INTAKE AIR FOR LOW PRESSURE BREATHING AIR COMPRESSOR.
13. MANIFOLD STATION CONTAINS ONLY TWO AIR CONNECTIONS.
14. DCN 9504008

NOT TO BE INCORPORATED AMENDMENT LIST		
TYPE	NUMBER	LOCATION/ DWG. COORD.
HFCR	BZ01359	N/A

D194

LR BOUNDARY DRAWING NO.	REV.
LR-STP-IA-5Q129F05044#2	0A

NO.	ISSUE DATE	REVISION	BY	CKR	RE	DV	NA	SE	PE
14		INCORP. DCN 9504008	JSH						
13	2-16-94	INCORP. PCF 179273A AND EDITORIAL	SIGNATURES ON FILE						
12	11-12-90	HL&P ASSUMES DESIGN CHANGE CONTROL & INC. ECN 89-M-0241-A	SIGNATURES ON FILE						
0-11	12-20-82	ISSUED FOR CONSTRUCTION	SIGNATURES ON FILE						

EDWG.DGN

HOUSTON LIGHTING & POWER COMPANY
SOUTH TEXAS PROJECT ELECTRIC GENERATING STATION

PIPING AND INSTRUMENTATION DIAGRAM
LOW PRESSURE BREATHING AIR SYSTEM

SCALE	DWG. NO.	REV.
NONE	50129F05044 *2	14

JSH PRIORITY 1 CADD DC.NO. D070928 FJA411.141