THIS DRAWING MUST BE WORKED WITH THE FOLLOWING DOCUMENTS:

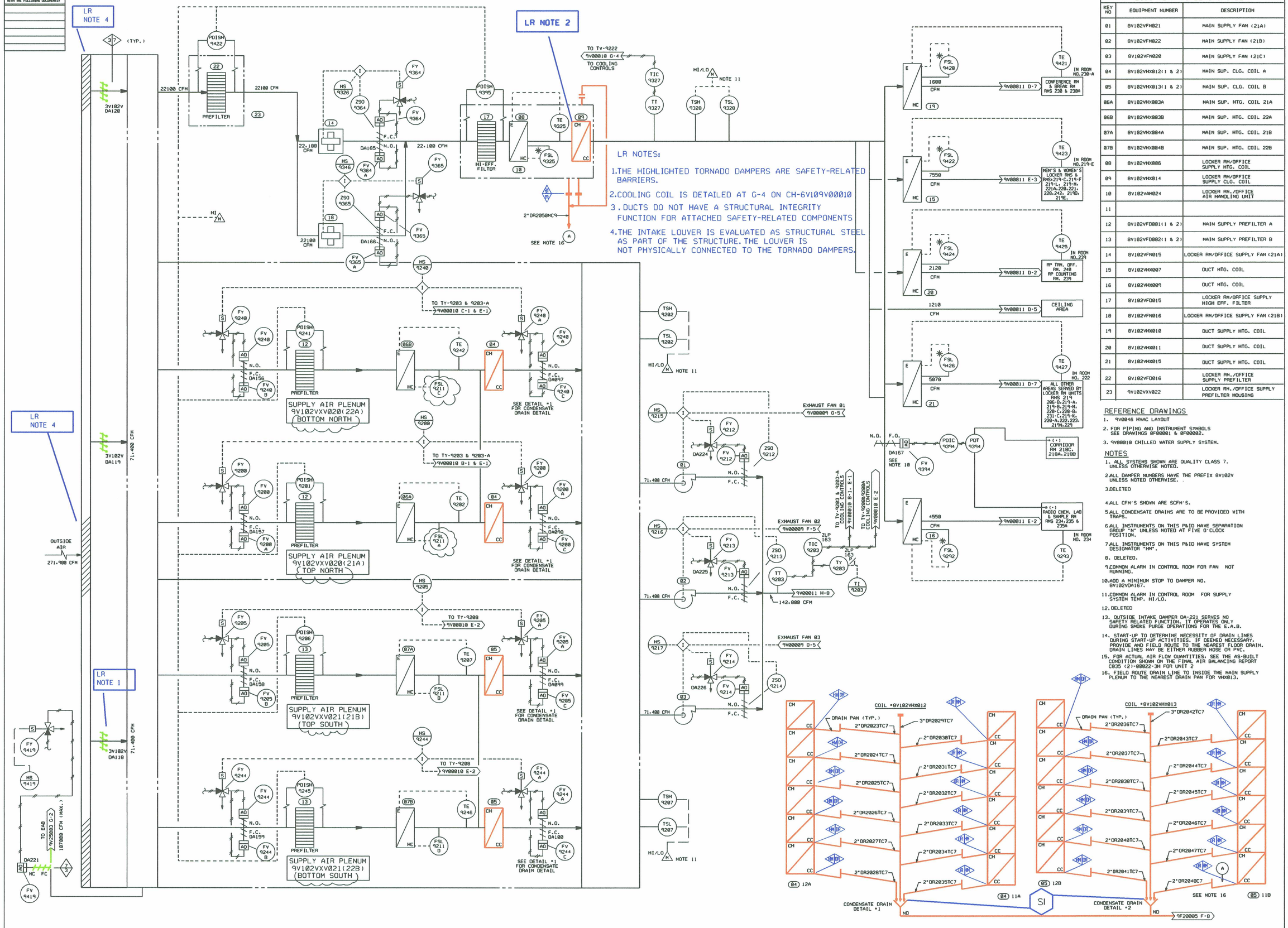

LR NOTES:

1. THE HIGHLIGHTED TORNADO DAMPERS ARE SAFETY-RELATED BARRIERS.
2. COOLING COIL IS DETAILED AT G-4 ON CH-6V109V00010
3. DUCTS DO NOT HAVE A STRUCTURAL INTEGRITY FUNCTION FOR ATTACHED SAFETY-RELATED COMPONENTS
4. THE INTAKE LOUVER IS EVALUATED AS STRUCTURAL STEEL AS PART OF THE STRUCTURE. THE LOUVER IS NOT PHYSICALLY CONNECTED TO THE TORNADO DAMPERS.

EQUIPMENT NUMBERING INDEX

KEY NO	EQUIPMENT NUMBER	DESCRIPTION
01	8V102VFN021	MAIN SUPPLY FAN (21A)
02	8V102VFN022	MAIN SUPPLY FAN (21B)
03	8V102VFN020	MAIN SUPPLY FAN (21C)
04	8V102VHX012(1 & 2)	MAIN SUP. CLG. COIL A
05	8V102VHX013(1 & 2)	MAIN SUP. CLG. COIL B
06A	8V102VHX003A	MAIN SUP. HTG. COIL 21A
06B	8V102VHX003B	MAIN SUP. HTG. COIL 22A
07A	8V102VHX004A	MAIN SUP. HTG. COIL 21B
07B	8V102VHX004B	MAIN SUP. HTG. COIL 22B
08	8V102VHX006	LOCKER RM/OFFICE SUPPLY HTG. COIL
09	8V102VHX014	LOCKER RM/OFFICE SUPPLY CLG. COIL
10	8V102VAH024	LOCKER RM./OFFICE AIR HANDLING UNIT
11		
12	8V102VFD001(1 & 2)	MAIN SUPPLY PREFILTER A
13	8V102VFD002(1 & 2)	MAIN SUPPLY PREFILTER B
14	8V102VFN015	LOCKER RM/OFFICE SUPPLY FAN (21A)
15	8V102VHX007	DUCT HTG. COIL
16	8V102VHX009	DUCT HTG. COIL
17	8V102VFD015	LOCKER RM/OFFICE SUPPLY HIGH EFF. FILTER
18	8V102VFN016	LOCKER RM/OFFICE SUPPLY FAN (21B)
19	8V102VHX010	DUCT SUPPLY HTG. COIL
20	8V102VHX011	DUCT SUPPLY HTG. COIL
21	8V102VHX015	DUCT SUPPLY HTG. COIL
22	8V102VFD016	LOCKER RM./OFFICE SUPPLY PREFILTER
23	9V102VXV022	LOCKER RM./OFFICE SUPPLY PREFILTER HOUSING

REFERENCE DRAWINGS

1. 9V0046 HVAC LAYOUT
2. FOR PIPING AND INSTRUMENT SYMBOLS SEE DRAWINGS 0F00001 & 0F00002.
3. 9V00010 CHILLED WATER SUPPLY SYSTEM.

NOTES

1. ALL SYSTEMS SHOWN ARE QUALITY CLASS 7. UNLESS OTHERWISE NOTED.
2. ALL DAMPER NUMBERS HAVE THE PREFIX 8V102V UNLESS NOTED OTHERWISE.
3. DELETED
4. ALL CFM'S SHOWN ARE SCFM'S.
5. ALL CONDENSATE DRAINS ARE TO BE PROVIDED WITH TRAPS.
6. ALL INSTRUMENTS ON THIS P&ID HAVE SEPARATION GROUP "N" UNLESS NOTED AT FIVE O'CLOCK POSITION.
7. ALL INSTRUMENTS ON THIS P&ID HAVE SYSTEM DESIGNATOR "MM".
8. DELETED.
9. COMMON ALARM IN CONTROL ROOM FOR FAN NOT RUNNING.
10. ADD A MINIMUM STOP TO DAMPER NO. 8V102VDA167.
11. COMMON ALARM IN CONTROL ROOM FOR SUPPLY SYSTEM TEMP. HI/LO.
12. DELETED
13. OUTSIDE INTAKE DAMPER DA-221 SERVES NO SAFETY RELATED FUNCTION. IT OPERATES ONLY DURING SMOKE PURGE OPERATIONS FOR THE E.A.B.
14. START-UP TO DETERMINE NECESSITY OF DRAIN LINES DURING START-UP ACTIVITIES. IF DEEMED NECESSARY, PROVIDE AND FIELD ROUTE TO THE NEAREST FLOOR DRAIN. DRAIN LINES MAY BE EITHER RUBBER HOSE OR PVC.
15. FOR ACTUAL AIR FLOW QUANTITIES, SEE THE AS-BUILT CONDITION SHOWN ON THE FINAL AIR BALANCING REPORT C035 (2)-00022-3H FOR UNIT 2
16. FIELD ROUTE DRAIN LINE TO INSIDE THE MAIN SUPPLY PLENUM TO THE NEAREST DRAIN PAN FOR VHX013.

NO.	ISSUE DATE	REVISION	ORIG	CKR	RE	DV	SE	NO.	ISSUE DATE	REVISION	ORIG	CKR	RE	DV	SE
18		INCORP. DCN 9800162.	LNB												
1-17	11-29-82	ISSUED FOR CONSTRUCTION	SIGNATURES ON FILE												

ESSED.DGN

SOUTH TEXAS PROJECT
NUCLEAR OPERATING COMPANY

PRIORITY	RMSECM NO.	DOC.CTL.NO.	CADD FILE NO.
1	5V109V00006*2	D070928	FJA734.181

PIPING & INSTRUMENTATION DIAGRAM
HVAC MECHANICAL AUXILIARY BUILDING
SUPPLY SYSTEM FLOW DIAGRAM

SCALE	DWG. NO.	REV.
NONE	5V109V00006 *2	18

LR BOUNDARY DRAWING NO.	REV.
LR-STP-HM-5V109V00006*2	0A

D178