LR NOTES:

1. THE HIGHLIGHTED TORNADO DAMPERS ARE SAFETY-RELATED BARRIERS.
2. COOLING COIL IS DETAILED AT G-4 ON CH-6V109V00010
3. DUCTS DO NOT HAVE A STRUCTURAL INTEGRITY FUNCTION FOR ATTACHED SAFETY-RELATED COMPONENTS
4. THE INTAKE LOUVER IS EVALUATED AS STRUCTURAL STEEL AS PART OF THE STRUCTURE. THE LOUVER IS NOT PHYSICALLY CONNECTED TO THE TORNADO DAMPERS.

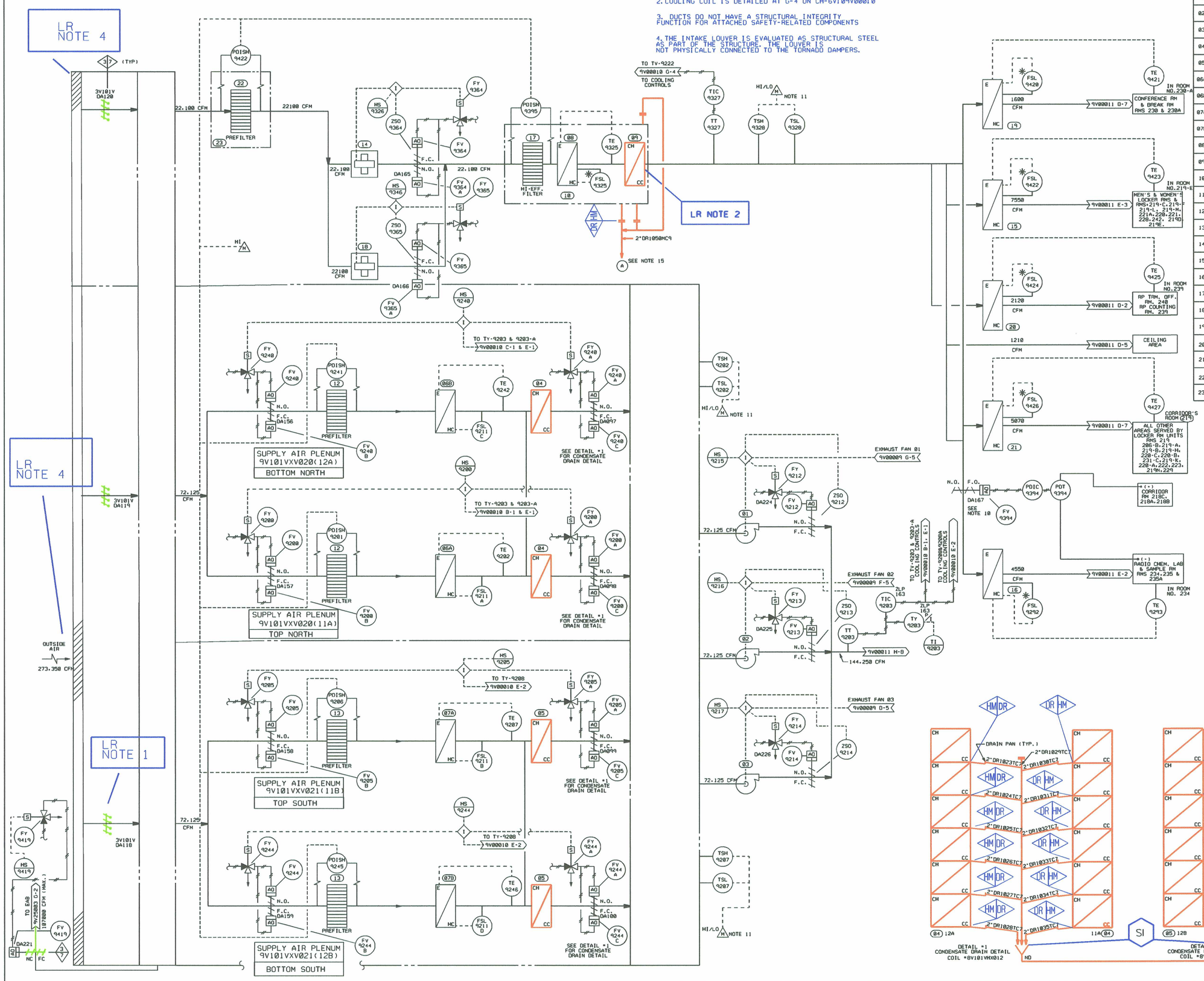

EQUIPMENT NUMBERING INDEX

KEY NO	EQUIPMENT NUMBER	DESCRIPTION
01	8V101VFN021	MAIN SUPPLY FAN (11A)
02	8V101VFN022	MAIN SUPPLY FAN (11B)
03	8V101VFN020	MAIN SUPPLY FAN (11C)
04	8V101VHX012(1 & 2)	MAIN SUP. CLG. COIL A
05	8V101VHX013(1 & 2)	MAIN SUP. CLG. COIL B
06A	8V101VHX003A	MAIN SUP. HTG. COIL 11A
06B	8V101VHX003B	MAIN SUP. HTG. COIL 12A
07A	8V101VHX004A	MAIN SUP. HTG. COIL 11B
07B	8V101VHX004B	MAIN SUP. HTG. COIL 12B
08	8V101VHX006	LOCKER RM/OFFICE SUPPLY HTG. COIL
09	8V101VHX014	LOCKER RM/OFFICE SUPPLY CLG. COIL
10	8V101VAM024	LOCKER RM./OFFICE AIR HANDLING UNIT
11		
12	8V101VFD001(1 & 2)	MAIN SUPPLY PREFILTER A
13	8V101VFD002(1 & 2)	MAIN SUPPLY PREFILTER B
14	8V101VFN015	LOCKER RM/OFFICE SUPPLY FAN (11A)
15	8V101VHX007	DUCT HTG. COIL
16	8V101VHX009	DUCT HTG. COIL
17	8V101VFD015	LOCKER RM/OFFICE SUPPLY HIGH EFF. FILTER
18	8V101VFN016	LOCKER RM/OFFICE SUPPLY FAN (11B)
19	8V101VHX010	DUCT SUPPLY HTG. COIL
20	8V101VHX011	DUCT SUPPLY HTG. COIL
21	8V101VHX015	DUCT SUPPLY HTG. COIL
22	8V101VFD016	LOCKER RM./OFFICE SUPPLY PREFILTER
23	9V101VXV022	LOCKER RM./OFFICE SUPPLY PREFILTER HOUSING

REFERENCE DRAWINGS

1. 9V0046 HVAC LAYOUT
2. FOR PIPING AND INSTRUMENT SYMBOLS SEE DRAWINGS 0F00001 & 0F00002.
3. 9V00010 CHILLED WATER SUPPLY SYSTEM.

NOTES

1. ALL SYSTEMS SHOWN ARE QUALITY CLASS 7. UNLESS OTHERWISE NOTED.
2. ALL DAMPER NUMBERS HAVE THE PREFIX 8V101V UNLESS NOTED OTHERWISE.
3. DELETED
4. ALL CFM'S SHOWN ARE SCFM'S.
5. ALL CONDENSATE DRAINS ARE TO BE PROVIDED WITH TRAPS.
6. ALL INSTRUMENTS ON THIS P&ID HAVE SEPARATION GROUP "M" UNLESS NOTED AT FIVE O'CLOCK POSITION.
7. ALL INSTRUMENTS ON THIS P&ID HAVE SYSTEM DESIGNATOR "HM".
8. DELETED.
9. COMMON ALARM IN CONTROL ROOM FOR FAN NOT RUNNING.
10. ADD A MINIMUM STOP TO DAMPER NO. 8V101VDA167.
11. COMMON ALARM IN CONTROL ROOM FOR SUPPLY SYSTEM TEMP. HI/LO.
12. DELETED.
13. OUTSIDE INTAKE DAMPER DA-221 SERVES NO SAFETY RELATED FUNCTION. IT OPERATES ONLY DURING SMOKE PURGE OPERATIONS FOR THE E.A.B.
14. FOR ACTUAL AIR FLOW QUANTITIES, SEE THE AS BUILT CONDITION SHOWN ON THE FINAL AIR BALANCING REPORT CD35(1)-000024-3M FOR M.A.B. SUPPLY AND EXHAUST SYSTEM.
15. FIELD ROUTE DRAIN LINE TO INSIDE THE MAIN SUPPLY PLENUM TO THE NEAREST DRAIN PAN FOR VHX013.

NO.	ISSUE DATE	REVISION	ORIG	CKR	RE	DV	SE
17		INCORP. DCN 0200792.	JSH				
0-16	11/29/82	ISSUED FOR CONSTRUCTION	SIGNATURES ON FILE				

SOUTH TEXAS PROJECT
NUCLEAR OPERATING COMPANY

PRIORITY	CADD FILE NO.	FSUG. NO.	STI. NO.	SCALE	DWG. NO.	SHT.	REV.
1	FJA234.171	0070928			5V109V00006*1		17

PIPING & INSTRUMENTATION DIAGRAM
HVAC MECHANICAL AUXILIARY BUILDING
SUPPLY SYSTEM FLOW DIAGRAM

BOUNDARY DRAWING NO. LR-STP-HM-5V109V00006*1 REV. 0B

ESEED.DGN

29177