EL.	RM. NO.	DESCRIPTION
4'-0"	001	FUEL CASK AREA
4'-0"	002	HVAC SUPPLY EQUIPMENT ROOM
4'-0"	003	HVAC EXHAUST EQUIPMENT ROOM
4'-0"	004	PUMP CUBICLE TRAIN C
4'-0"	005	PUMP CUBICLE TRAIN B
4'-0"	006	PUMP CUBICLE TRAIN A
4'-0"	007	RECIRC. VALVE ENCLOSURE TANK
4'-0"	007A	SPRAY ADDITIVE TANK CUBICLE
4'-0"	008	RECIRC. VALVE ENCLOSURE TANK
4'-0"	008A	SPRAY ADDITIVE TANK CUBICLE
4'-0"	009	RECIRC. VALVE ENCLOSURE TANK
4'-0"	009A	SPRAY ADDITIVE TANK CUBICLE
4'-0"	010	PUMP PULL SPACE
4'-0"	011	
4'-0"	011A	TENDON ACCESS AREA
30'-0"	101	RAIL CAR
30'-0"	102	CASK LOADING AREA
30'-0"	103	NEW FUEL HANDLING AREA
30'-0"	104	HVAC EXHAUST EQUIPMENT RM.
30'-0"	106	S.F.P.P. ROOM
30'-0"	107	S.F.P.P. ROOM
30'-0"	108	
30'-0"	109	SKIMMER PUMP ROOM
30'-0"	109A	ELECTRICAL CHASE
30'-0"	110	RADIOACTIVE PIPE CHASE
30'-0"	110A	ELECTRICAL CHASE
30'-0"	111	SPENT FUEL POOL AREA
30'-0"	111A	
53'-0"	112	
53'-0"	112A	TENDON ACCESS AREA
53'-0"	203	NEW FUEL STORAGE
53'-0"	204	HVAC EXHAUST EQUIPMENT RM.
53'-0"	206	S.F.P. HEAT EXCHANGER RM.
53'-0"	207	S.F.P. HEAT EXCHANGER RM.
53'-0"	208	
53'-0"	209	RADIOACTIVE PIPE CHASE
68'-0"	301	OPERATING FLOOR
68'-0"	302	OPERATING FLOOR
68'-0"	303	OPERATING FLOOR
68'-0"	304	
68'-0"	305	FUEL SIPPING STATION
68'-0"	306	ELEVATOR MACHINE RM.

KEY NO.	EQUIPMENT NUMBER	DESCRIPTION
01	8V122VFN001	FH HVAC SUPPLY FAN (21A)
02	8V122VFN002	FH HVAC SUPPLY FAN (21B)
03	8V122VFN003	FH HVAC SUPPLY FAN (21C)
04	DELETED	
05	DELETED	
06	DELETED	
07	3V122VAM004	LH SI PUMP SUPPL CLR (21A)
08	3V122VAM005	LH SI PUMP SUPPL CLR (21B)
09	3V122VAM006	LH SI PUMP SUPPL CLR (21C)
10	DELETED	
11	DELETED	
12	DELETED	
13	8V122VHX001	FH HVAC HTG COIL (21A)
14	8V122VHX002	FH HVAC HTG COIL (21B)
15	8V122VHX003	FH HVAC HTG COIL (21C)
16	8V122VHX004	FH HVAC CLG COIL (21A,22A)
17	8V122VHX005	FH HVAC CLG COIL (21B,22B)
18	8V122VHX006	FH HVAC CLG COIL (21C,22C)
19	8V122VFD001	FH HVAC SUP PREFLTR (21A)
20	8V122VFD002	FH HVAC SUP PREFLTR (21B)
21	8V122VFD003	FH HVAC SUP PREFLTR (21C)
22	DELETED	
23	DELETED	
24	DELETED	
25	8V122VFN010	ELEV M/C RM EXH FAN (21A)
26	8V122VFN011	ELEV M/C RM EXH FAN (21B)
27	3V122VAM012	SUP CLR (CS ISO.VA.CUB) (21A)
28	3V122VAM013	SUP CLR (CS ISO VA CUB) (21B)
29	3V122VAM014	SUP CLR (CS ISO VA CUB) (21C)
30	3V122VAM010	SUP CLR (SFPP RM) (21A)
31	3V122VAM011	SUP CLR (SFPP RM) (21B)
32	9V122VAM001	SUP CLR (PASS)

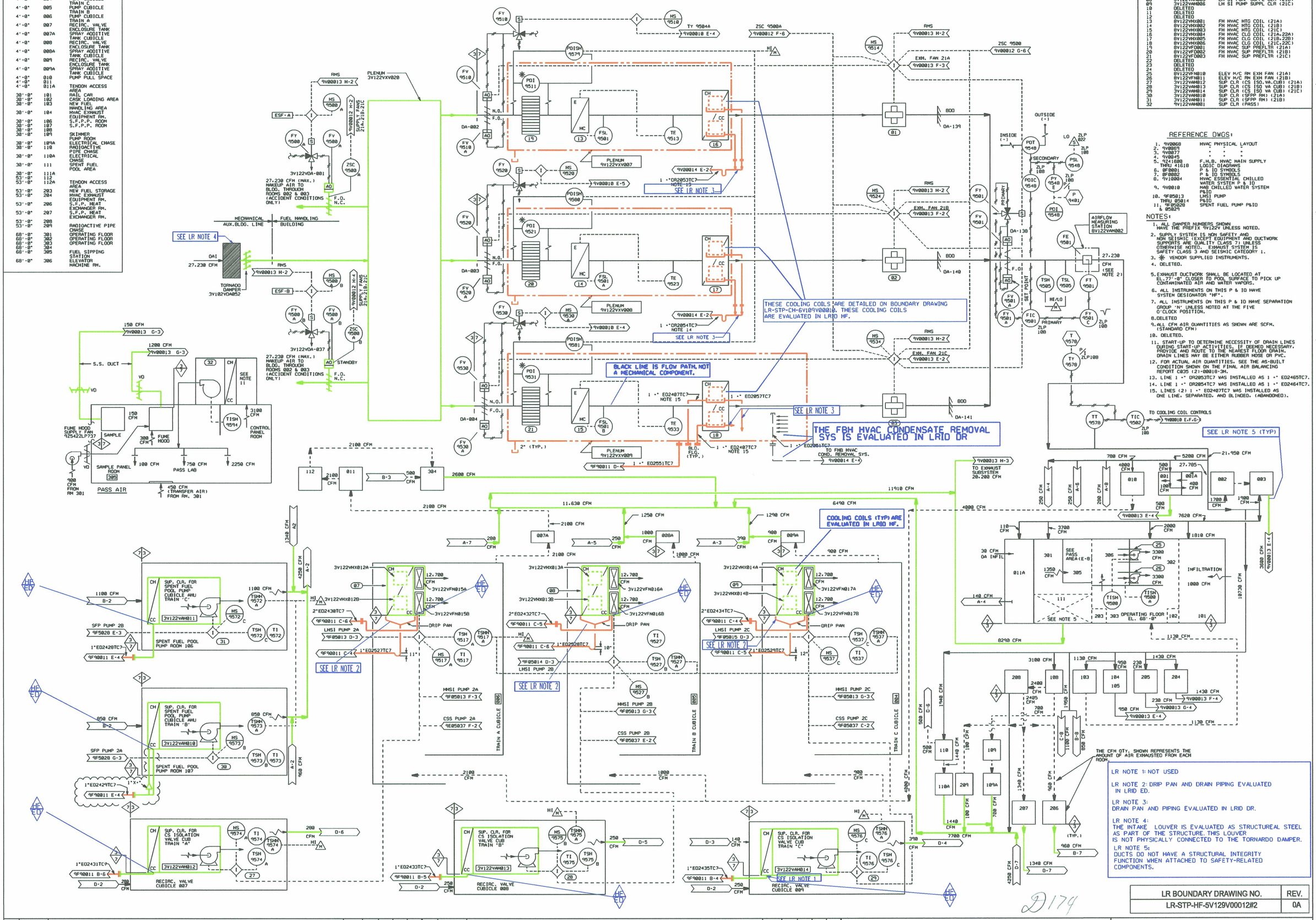

REFERENCE DWGS:

1. 9V0068	HVAC PHYSICAL LAYOUT
2. 9V0069	" " "
3. 9V0077	" " "
4. 9V0045	" " "
5. 9Z41600 THRU 41610	F.H.B. HVAC MAIN SUPPLY LOGIC DIAGRAMS
6. 8F0001	P & ID SYMBOLS
7. 8F0002	P & ID SYMBOLS
8. 9V10004	HVAC ESSENTIAL CHILLED WATER SYSTEM P & ID
9. 9V0010	HAB CHILLED WATER SYSTEM P&ID
10. 9F05013 THRU 05014	LHSI PUMP P&ID
11. 9F05028 & 05029	SPENT FUEL PUMP P&ID

NOTES:

1. ALL DAMPER NUMBERS SHOWN HAVE THE PREFIX 9V122V UNLESS NOTED.
2. SUPPLY SYSTEM IS NON SAFETY AND NON SEISMIC (EXCEPT EQUIPMENT AND DUCTWORK SUPPORTS ARE QUALITY CLASS 7) UNLESS OTHERWISE NOTED. EXHAUST SYSTEM IS SAFETY CLASS 3 AND SEISMIC CATEGORY 1.
3. ✻ VENDOR SUPPLIED INSTRUMENTS.
4. DELETED.
5. EXHAUST DUCTWORK SHALL BE LOCATED AT EL.77'-0" CLOSER TO POOL SURFACE TO PICK UP CONTAMINATED AIR AND WATER VAPORS.
6. ALL INSTRUMENTS ON THIS P & ID HAVE SYSTEM DESIGNATOR "HF".
7. ALL INSTRUMENTS ON THIS P & ID HAVE SEPARATION GROUP "N" UNLESS NOTED AT THE FIVE O'CLOCK POSITION.
8. DELETED
9. ALL CFM AIR QUANTITIES AS SHOWN ARE SCFM. (STANDARD CFM)
10. DELETED.
11. START-UP TO DETERMINE NECESSITY OF DRAIN LINES DURING START-UP ACTIVITIES. IF DEEMED NECESSARY, PROVIDE AND ROUTE TO THE NEAREST FLOOR DRAIN. DRAIN LINES MAY BE EITHER RUBBER HOSE OR PVC.
12. FOR ACTUAL AIR QUANTITIES, SEE THE AS-BUILT CONDITION SHOWN ON THE FINAL AIR BALANCING REPORT CODE (21-00010-3M.
13. LINE 1 -* DR2053TC7 WAS INSTALLED AS 1 -* ED2465TC7.
14. LINE 1 -* DR2054TC7 WAS INSTALLED AS 1 -* ED2464TC7.
15. LINES (2) 1 -* ED2407TC7 WAS INSTALLED AS ONE LINE, SEPARATED, AND BLINDED. (ABANDONED).

LR NOTE 1: NOT USED

LR NOTE 2: DRIP PAN AND DRAIN PIPING EVALUATED IN LRID ED.

LR NOTE 3: DRAIN PAN AND PIPING EVALUATED IN LRID DR.

LR NOTE 4: THE INTAKE LOUVER IS EVALUATED AS STRUCTUREAL STEEL AS PART OF THE STRUCTURE. THIS LOUVER IS NOT PHYSICALLY CONNECTED TO THE TORNARDO DAMPER.

LR NOTE 5: DUCTS DO NOT HAVE A STRUCTURAL INTEGRITY FUNCTION WHEN ATTACHED TO SAFETY-RELATED COMPONENTS.

LR BOUNDARY DRAWING NO.	REV.
LR-STP-HF-5V129V00012#2	0A

NO.	ISSUE DATE	REVISION	ORIG	CKR	RE	DV	SE
18		INCORP. DCN 0700773.	JSH				
17	7-7-99	REVISED PER CR #99-3418-3	JGL	ON FILE			
0-16	12/16/82	ISSUED FOR CONSTRUCTION.	SIGNATURES ON FILE				

ESEED.DGN

SOUTH TEXAS PROJECT NUCLEAR OPERATING COMPANY

PIPING & INSTRUMENTATION DIAGRAM
HVAC FUEL HANDLING BUILDING
SUPPLY SYSTEM

PRIORITY	CADD FILE NO.	FSUG. NO.	STI. NO.	SCALE	DWG. NO.	REV.
1	FJA740.181	D070928		NONE	5V129V00012#2	18