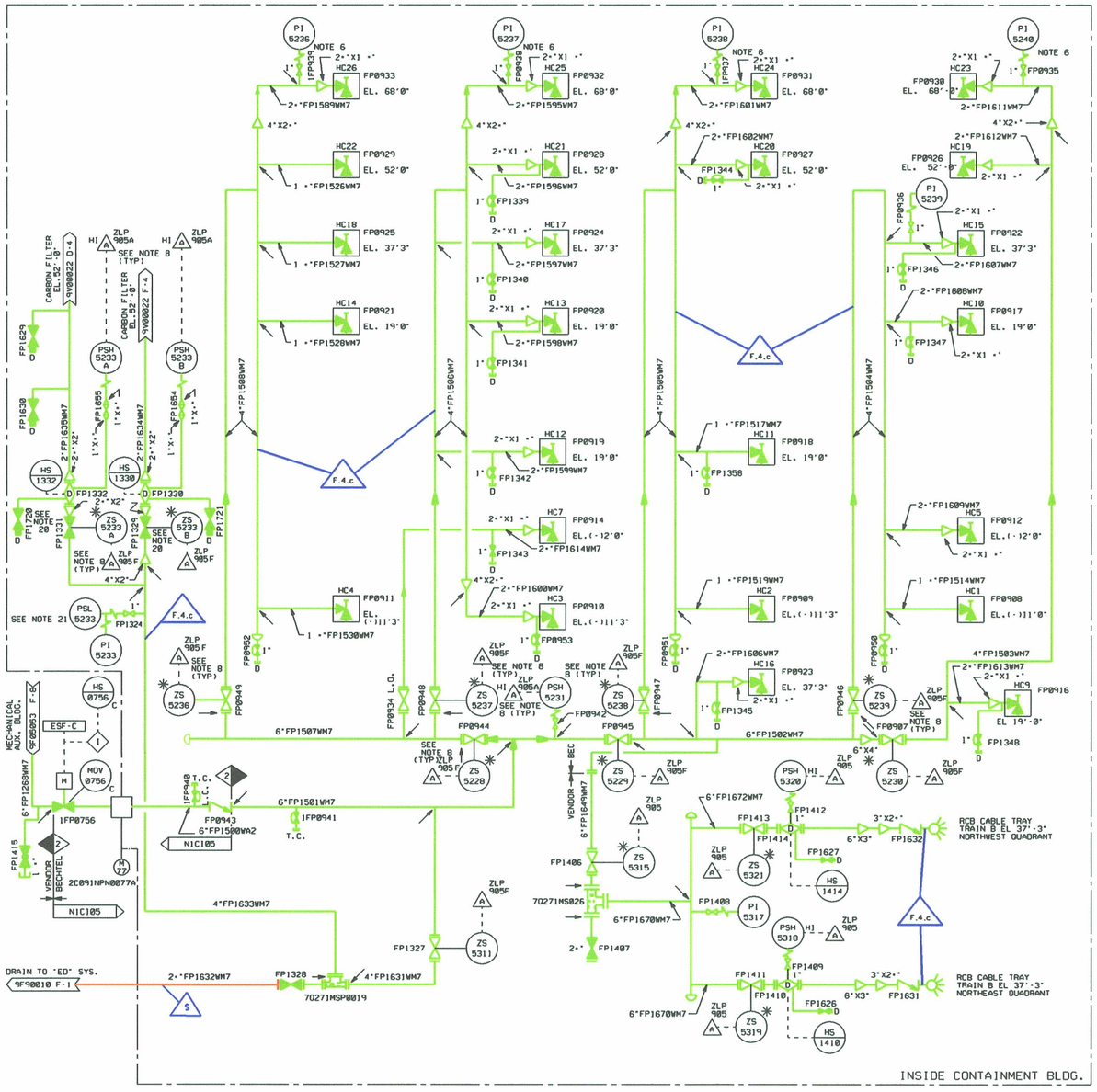

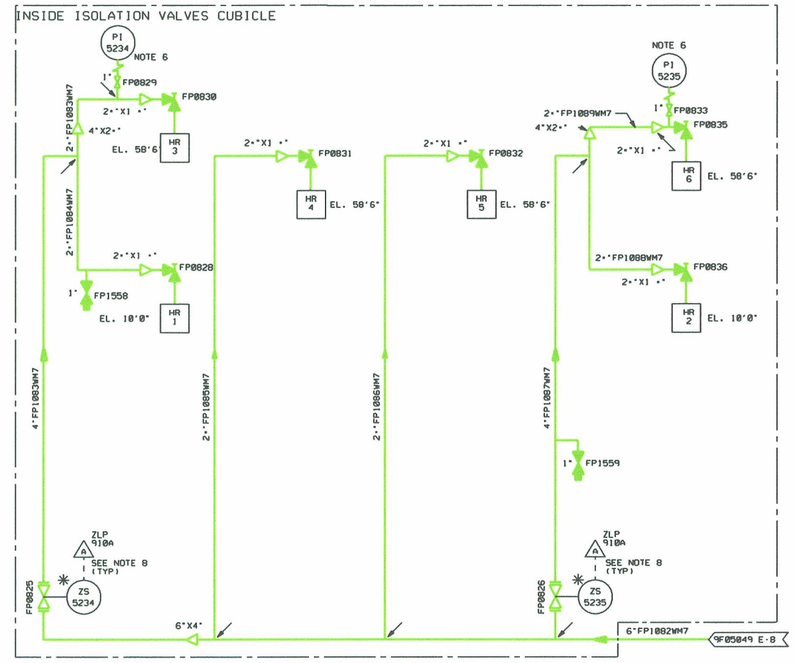

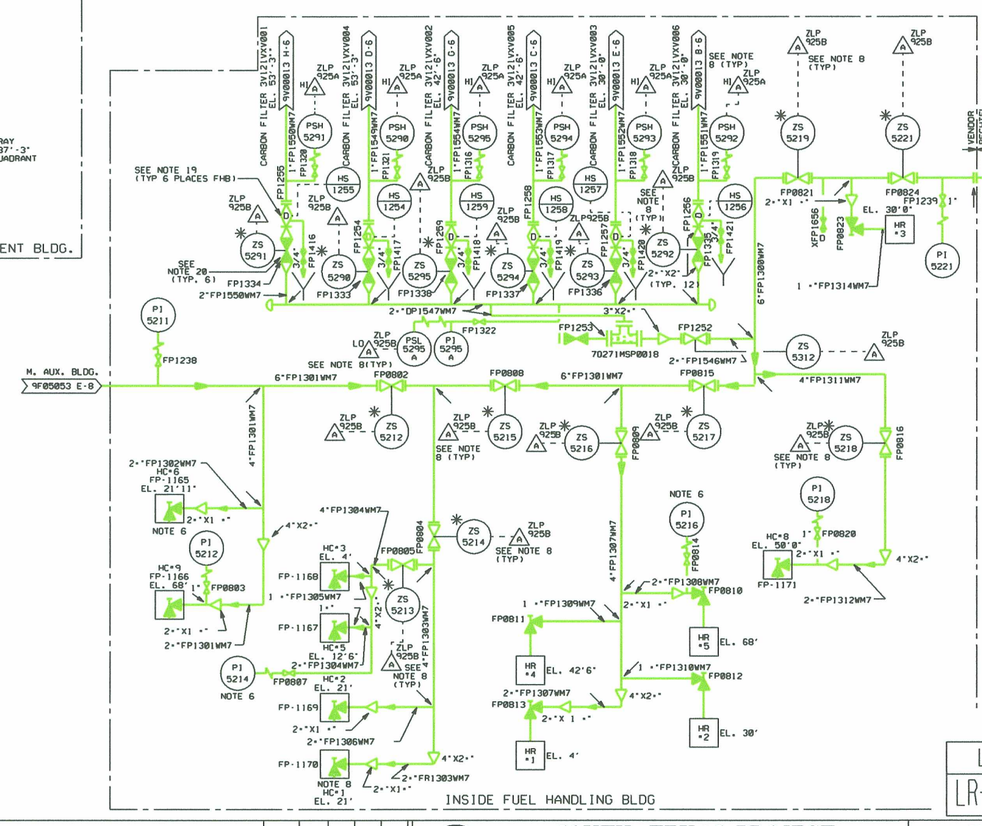

NOTES:

1. ALL GATE VALVES WITH ALARMS ON THIS DRAWING WILL ALARM WHEN MOVED FROM NORMAL POSITION.
2. INDICATES FIXED WATER SPRAY SYSTEM.
3. ALL HOSE CABINETS HC WILL BE FED FROM LEFT HAND SIDE.
4. PIPING MATERIAL BY OTHERS TO BE IN ACCORDANCE WITH SPEC. "WM".
5. ALL INSTRUMENTS ON THIS DIAGRAM ARE PREFIXED BY THE UNIT NUMBER 1 UNLESS OTHERWISE NOTED. SEE NOTE D ON 9A310F00002.
6. PRESSURE GAUGE TO BE INSTALLED AT THE HIGH POINT OF THE LINE.
7. ALL FP VALVES ARE TO BE PREFIXED BY AN 'X' WITH THE EXCEPTION OF 1FP0756, 1FP0943, & 1FP0940.
8. ALL ANNUNCIATORS WILL BE DISPLAYED ON THE LOCAL FIRE CONTROL PANEL AND RETRANSMITTED THRU THE FIRE PROTECTION DATA ACQUISITION SYSTEM TO A CRT DISPLAY IN THE CONTROL ROOM.
9. H.R.-HOSE REEL, HC-HOSE CABINET
10. DELUGE VALVES NORMALLY CLOSED.
11. DELETED.
12. ALL GAUGES & SWITCHES WILL BE SUPPLIED BY BECHTEL. AND INSTALLED BY THE SYSTEM CONTRACTOR. CONNECTIONS FOR GAUGES SHALL BE 1/4" MNPT AND CONNECTIONS FOR SWITCHES SHALL BE 1/2" MNPT. UNLESS OTHERWISE NOTED.
13. DELETED.
14. ALL INSTRUMENTS ON THIS P&ID HAVE SYSTEM DESIGNATOR FP.
15. ALL INSTRUMENTS ON THIS P&ID HAVE SEPARATION GROUP N.
16. VENTS AND DRAINS FOR THE FHB & IVC WILL BE LOCATED UPON FINAL DESIGN OF FIRE-PROTECTION SYSTEM FOR THESE BUILDINGS.
17. UNLESS OTHERWISE NOTED, UNIT 1 IS SHOWN ON THIS P&ID. FOR APPLICATION OF THIS P&ID TO UNIT 2, USE UNIT 2 IDENTIFICATION NUMBERS FOR PIPING, VALVES, INSTRUMENTS, EQUIPMENT, ETC. REFER TO DRAWING'S 9A310F00001 AND 9A310F00002 FOR IDENTIFICATION NUMBER DETAILS
18. DELETED
19. FOR VALVE TRIM DETAILS AND PIPING CONFIGURATION SEE ASCOA DRAWINGS SHOWN BELOW. FOR TRIM VALVE NUMBERS. SEE DWG. 7027IF05064.

VALVE NO	TRIM DWG	PIPING DWG
FP1256	00173/00174	00064
FP1257	00173/00174	00064
FP1258	00173/00174	00064
FP1259	00173/00174	00064
FP1254	00173/00174	00064
FP1255	00173/00174	00064
FP1330	00169	NA
FP1332	00169	NA
FP1410	00169	00130/00133
FP1414	00169	00131/00132/00134

20. AUTOMATIC DRAIN VALVE TO BE LOCATED BETWEEN OS & Y VALVE & DELUGE VALVE. SEE ASCOA DWG. 0295(1)-00073-SP.
21. PSL-5233 IS NON-OPERATIVE AND ABANDONED IN PLACE.
22. DRAINS AND INSPECTOR TEST CONNECTIONS MAY BE ADAPTED TO CONTROL DISCHARGED WATER. THESE MAY BE AS SHOWN ON P&ID'S OR MAY BE THREADED AND/OR FITTED WITH A HOSE CONNECTION TO FACILITATE TESTING IN ACCORDANCE WITH NFPA 13.
23. SYSTEM STRAINER DRAIN VALVES MAY BE EQUIPPED WITH A BLIND FLANGE ON THE DISCHARGE SIDE.

LR NOTES:

1. CONTAINMENT ISOLATION VALVES, PIPING AND TEST CONNECTION ARE IN SCOPE FOR A(1) CONSIDERATIONS AND ALL OTHER GREEN HIGHLIGHTED SSCS ARE NON-SAFETY RELATED AND IN SCOPE FOR A(3) CONSIDERATIONS ONLY.
2. ATTACHED NONSAFETY-RELATED PIPING IS IN SCOPE PER (A)(2) FOR BEING STRUCTURALLY ATTACHED FROM THE SAFETY-RELATED COMPONENT TO THE TERMINATION FLAG.

D123

LR BOUNDRY DRAWING NO.	REV.
LR-STP-FP-5Q279F05047#1	0B

NO.	ISSUE DATE	REVISION	ORIG	CKR	RE	DV	SE
21		REVISED PER CR# 06-6319-1.	JSH				
0-209-20-82		ISSUED FOR CONSTRUCTION.	SIGNATURES ON FILE				

SOUTH TEXAS PROJECT NUCLEAR OPERATING COMPANY

PRIORITY	CADD FILE NO.	FSUG. NO.	STI. NO.	SCALE	DWG. NO.	SHT.	REV.
1	FJA166.211	D070928		NONE	5Q279F05047#1		21

PIPING AND INSTRUMENTATION DIAGRAM
FUEL HANDLING, IVC, CONTAINMENT BLDG.
FIRE PROTECTION SYSTEM

ESEED.DGN