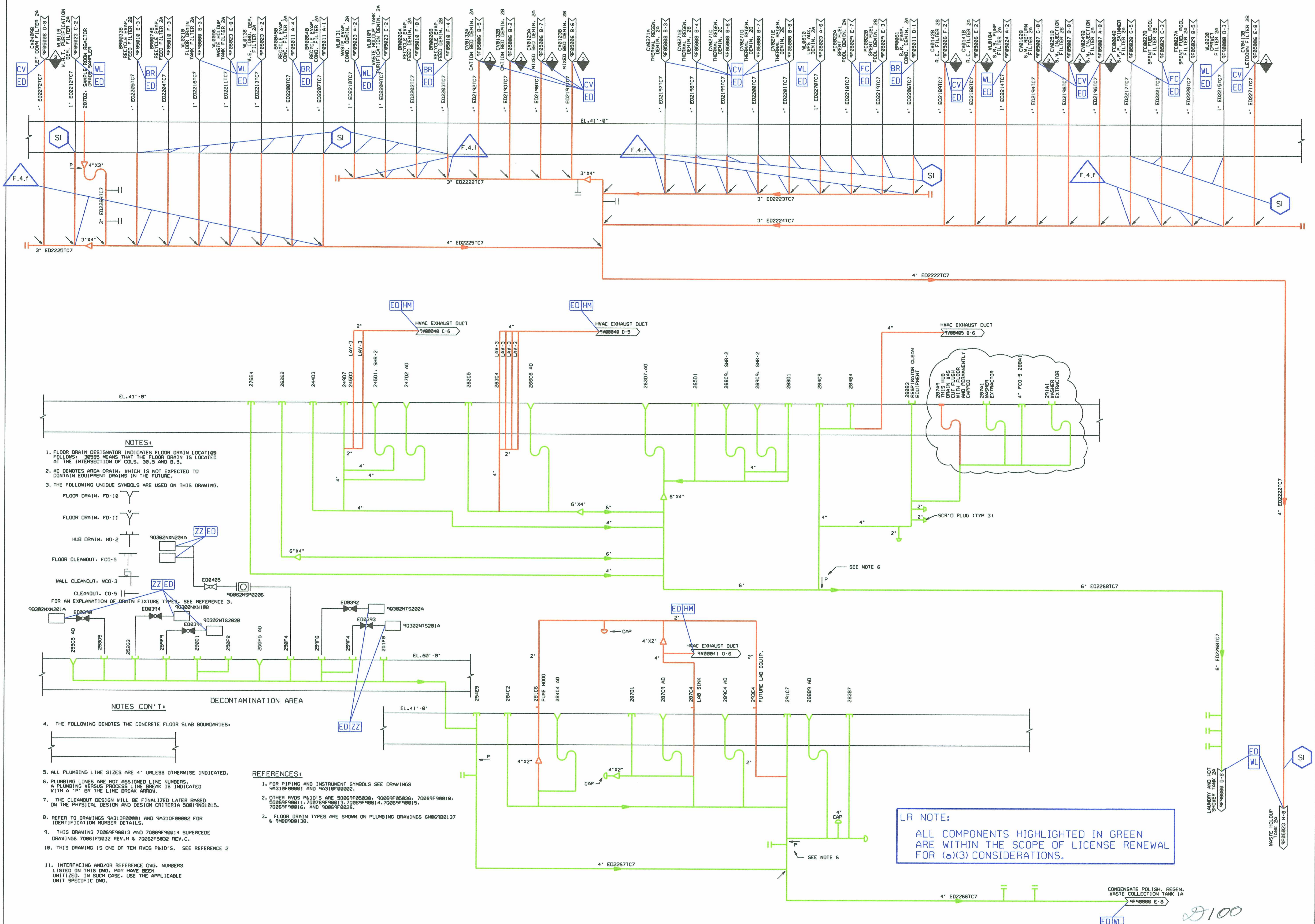

NOTES:

1. FLOOR DRAIN DESIGNATOR INDICATES FLOOR DRAIN LOCATION AS FOLLOWS: 305B5 MEANS THAT THE FLOOR DRAIN IS LOCATED AT THE INTERSECTION OF COLS. 30.5 AND B.5.
2. AD DENOTES AREA DRAIN, WHICH IS NOT EXPECTED TO CONTAIN EQUIPMENT DRAINS IN THE FUTURE.
3. THE FOLLOWING UNIQUE SYMBOLS ARE USED ON THIS DRAWING.
   - FLOOR DRAIN, FD-10
   - FLOOR DRAIN, FD-11
   - HUB DRAIN, HD-2
   - FLOOR CLEANOUT, FCO-5
   - WALL CLEANOUT, WCO-3
   - CLEANOUT, CO-5

   FOR AN EXPLANATION OF DRAIN FIXTURE TYPES, SEE REFERENCE 3.

NOTES CON'T:

4. THE FOLLOWING DENOTES THE CONCRETE FLOOR SLAB BOUNDARIES:
5. ALL PLUMBING LINE SIZES ARE 4" UNLESS OTHERWISE INDICATED.
6. PLUMBING LINES ARE NOT ASSIGNED LINE NUMBERS. A PLUMBING VERSUS PROCESS LINE BREAK IS INDICATED WITH A "P" BY THE LINE BREAK ARROW.
7. THE CLEANOUT DESIGN WILL BE FINALIZED LATER BASED ON THE PHYSICAL DESIGN AND DESIGN CRITERIA 50019N01015.
8. REFER TO DRAWINGS 9A310F00001 AND 9A310F00002 FOR IDENTIFICATION NUMBER DETAILS.
9. THIS DRAWING 7Q069F90013 AND 7Q069F90014 SUPERCEDE DRAWINGS 7Q061F5032 REV.H & 7Q062F5032 REV.C.
10. THIS DRAWING IS ONE OF TEN RVDS P&ID'S. SEE REFERENCE 2
11. INTERFACING AND/OR REFERENCE DWG. NUMBERS LISTED ON THIS DWG. MAY HAVE BEEN UNITIZED. IN SUCH CASE, USE THE APPLICABLE UNIT SPECIFIC DWG.

REFERENCES:

1. FOR PIPING AND INSTRUMENT SYMBOLS SEE DRAWINGS 9A310F00001 AND 9A310F00002.
2. OTHER RVDS P&ID'S ARE 5Q069F05030, 9Q069F05036, 7Q069F90010, 5Q069F90011, 7Q0769F90013, 7Q069F90014, 7Q069F90015, 7Q069F90016, AND 9Q069F0026.
3. FLOOR DRAIN TYPES ARE SHOWN ON PLUMBING DRAWINGS 6M069B0137 & 9M889B0138.

LR NOTE:

ALL COMPONENTS HIGHLIGHTED IN GREEN ARE WITHIN THE SCOPE OF LICENSE RENEWAL FOR (a)(3) CONSIDERATIONS.

NO.	ISSUE DATE	REVISION	ORIG	CKR	RE	DV	SE
11		INCORP. DCN 0100615.	LNB				
0-10	10-26-83	ISSUED FOR CONSTRUCTION	SIGNATURES ON FILE				

ESEED.DGN

SOUTH TEXAS PROJECT NUCLEAR OPERATING COMPANY

PIPING AND INSTRUMENTATION
RADIOACTIVE VENT AND DRAIN SYSTEM
MAB SEGREGATED GRAVITY DRAINS

PRIORITY	CADD FILE NO.	FSUG. NO.	STI. NO.	SCALE	DWG. NO.	SHT.	REV.
1	FJA716.111	D070928		NONE	7Q069F90012 #2		11

LR BOUNDARY DRAWING NO.	REV.
LR-STP-ED-7Q069F90012#2	0A