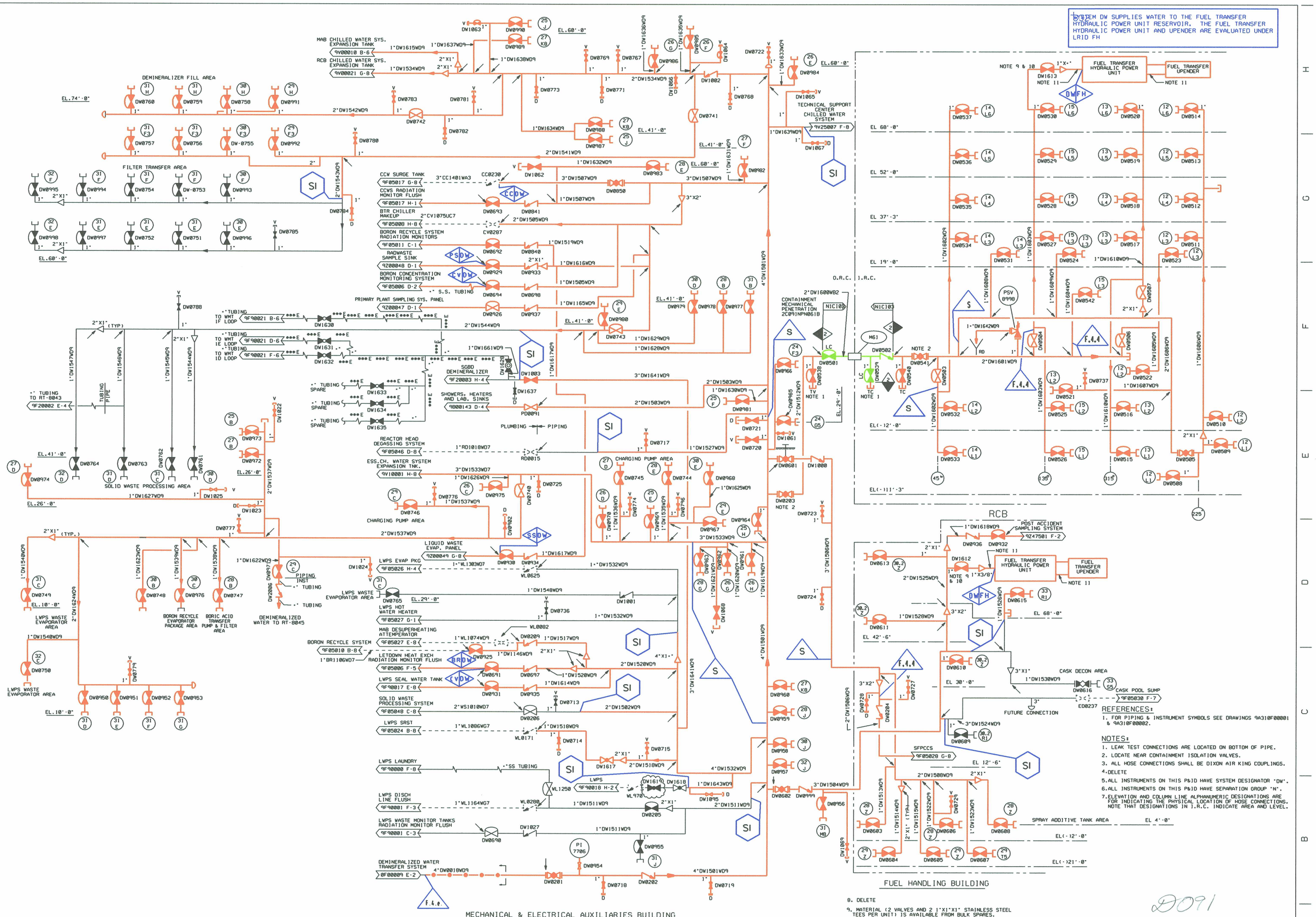

REFERENCES:

1. FOR PIPING & INSTRUMENT SYMBOLS SEE DRAWINGS 9A310F00001 & 9A310F00002.

NOTES:

1. LEAK TEST CONNECTIONS ARE LOCATED ON BOTTOM OF PIPE.
2. LOCATE NEAR CONTAINMENT ISOLATION VALVES.
3. ALL HOSE CONNECTIONS SHALL BE DIXON AIR KING COUPLINGS.
4. DELETE
5. ALL INSTRUMENTS ON THIS P&ID HAVE SYSTEM DESIGNATOR "DW".
6. ALL INSTRUMENTS ON THIS P&ID HAVE SEPARATION GROUP "N".
7. ELEVATION AND COLUMN LINE ALPHANUMERIC DESIGNATIONS ARE FOR INDICATING THE PHYSICAL LOCATION OF HOSE CONNECTIONS. NOTE THAT DESIGNATIONS IN I.R.C. INDICATE AREA AND LEVEL.
8. DELETE
9. MATERIAL (2 VALVES AND 2 1"X1"X1" STAINLESS STEEL TEES PER UNIT) IS AVAILABLE FROM BULK SPARES.
10. VALVES RESERVED FOR THIS CHANGE HAVE BUTT WELDED ENDS.
11. STAINLESS STEEL TUBING CONNECTIONS FOR THIS EQUIPMENT ARE DESCRIBED IN THE WESTINGHOUSE FUEL TRANSFER SYSTEM TECHNICAL MANUAL.
12. DELETE

D091

LR BOUNDRY DRAWING NO.	REV.
LR-STP-DW-5S199F05034#1	0A

NO.	ISSUE DATE	REVISION	ORIG	CKR	RE	DV	SE
823	817	811	797				
820	858	852	808				
825	848	8WGORP. DCN 0400170.	808				
826	6-82098	8WGORPORATED DCN 9801301	808	ON FILE			
827	9-82294	8WGORPORATED PCF 203704A & 304182A	808	NATURES ON FILE			
828	10-82292	8WGUED FOR CONSTRUCTION	808	NATURES ON FILE			

SOUTH TEXAS PROJECT
NUCLEAR OPERATING COMPANY

PIPING & INSTRUMENTATION DIAGRAM
DEMINERALIZED WATER DISTRIBUTION SYSTEM
RCB, FHB AND MEAB

PRIORITY	CADD FILE NO.	FSUG. NO.	STI. NO.	SCALE	DWG. NO.	SHT.	REV.
	FJA022.151	D070928		NONE	5S199F05034#1		15

ESEED.DGN