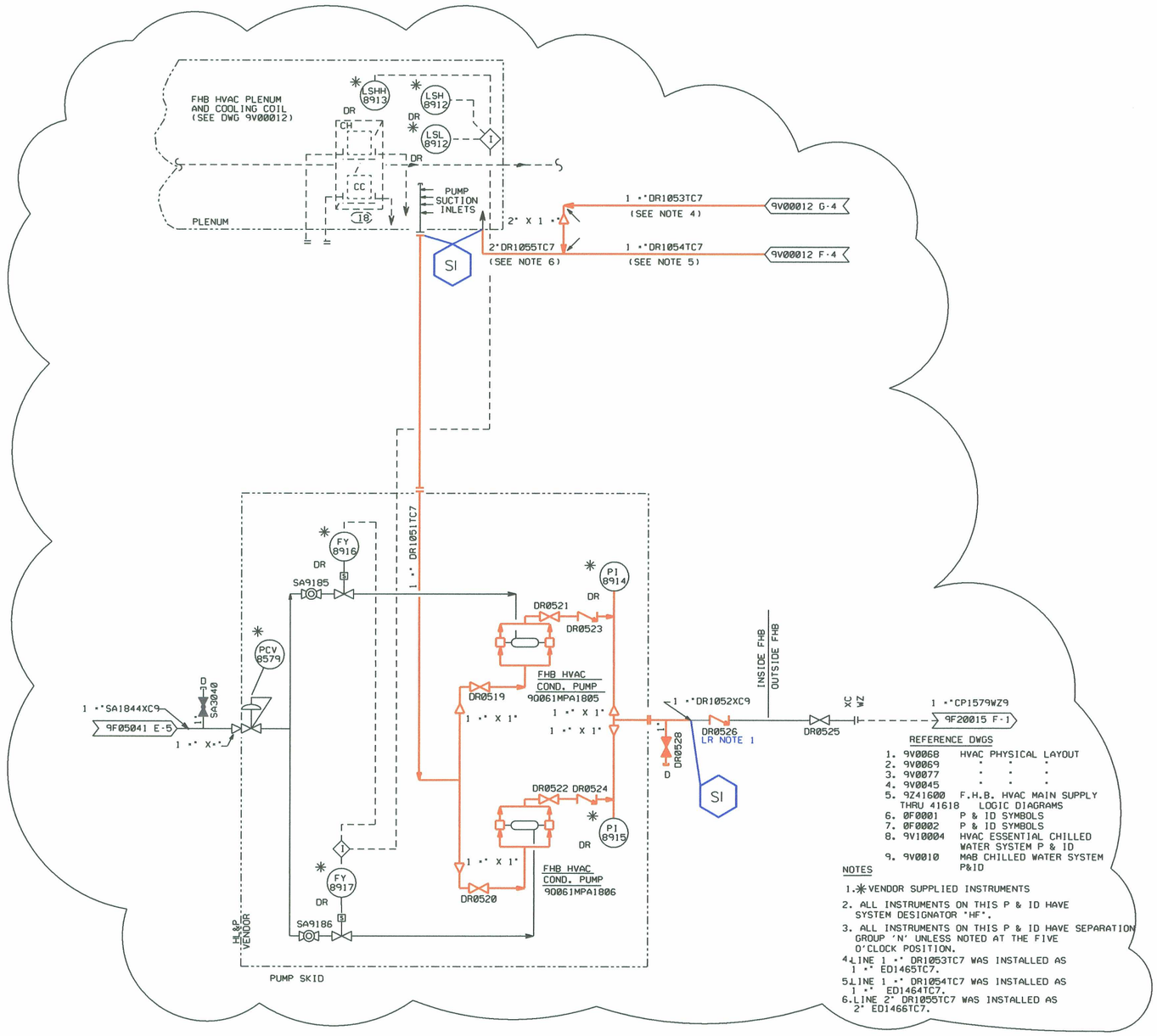

2005

LR NOTE 1:
CHECK VALVE DR0526 IS WITHIN THE SCOPE OF LICENSE RENEWAL FOR FLOOD PROTECTION (a)(3)

LR BOUNDARY DRAWING NO.	REV.
LR-STP-DR-5V129V00014#1	0B

NO.	ISSUE DATE	REVISION	BY	CKR	RE	DV	NA	SE	PE
0		INCORP. DCN 9604752 FROM 5V129V00012#1.	VJM						

HOUSTON LIGHTING & POWER COMPANY
SOUTH TEXAS PROJECT ELECTRIC GENERATING STATION

PIPING & INSTRUMENTATION DIAGRAM
FUEL HANDLING BUILDING
HVAC COND. REMOVAL SYSTEM

SCALE	DWG. NO.	REV.
NONE	5V129V00014 #1	0

RMSECM NO. 5V129V00014#1 PRIORITY 1 DC NO. D070928 F0223.002

EDWG.DGN