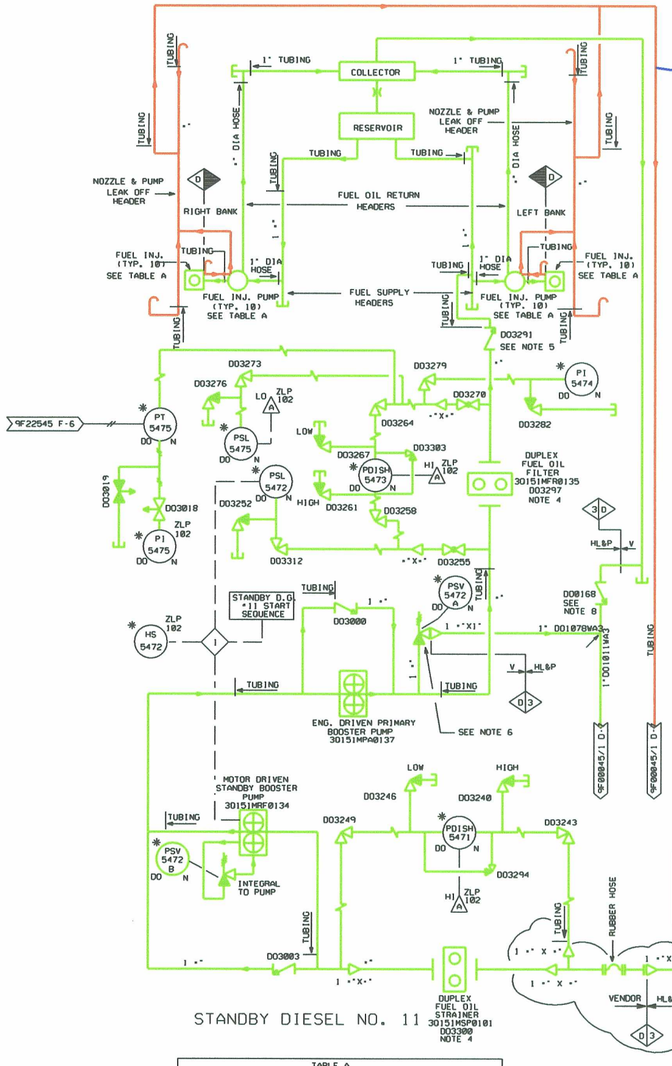

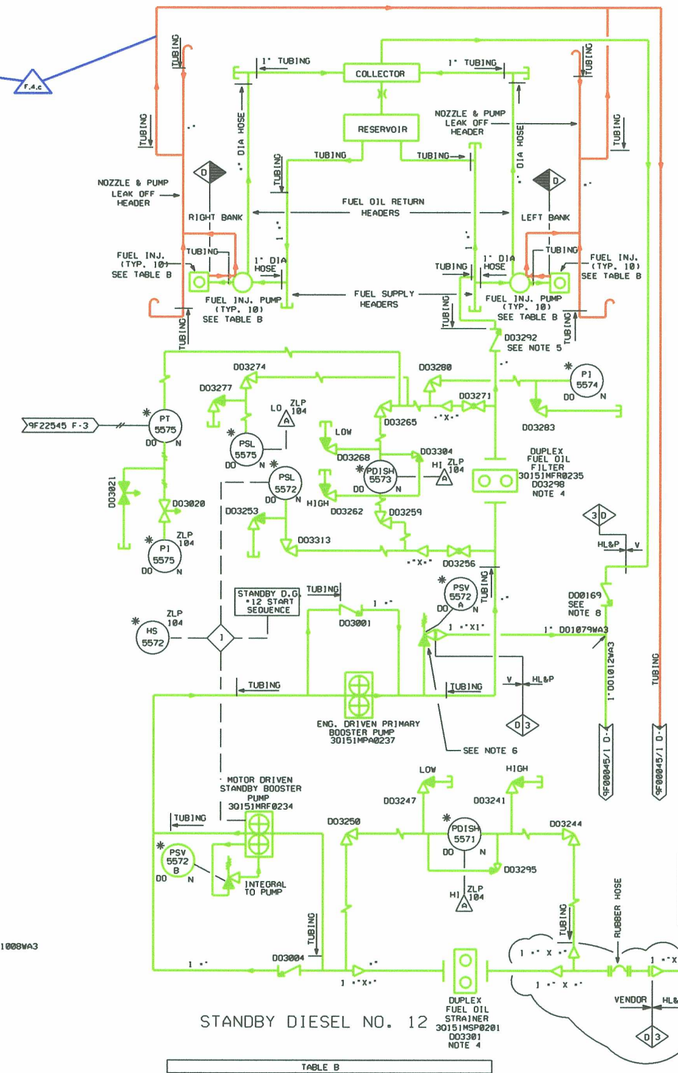

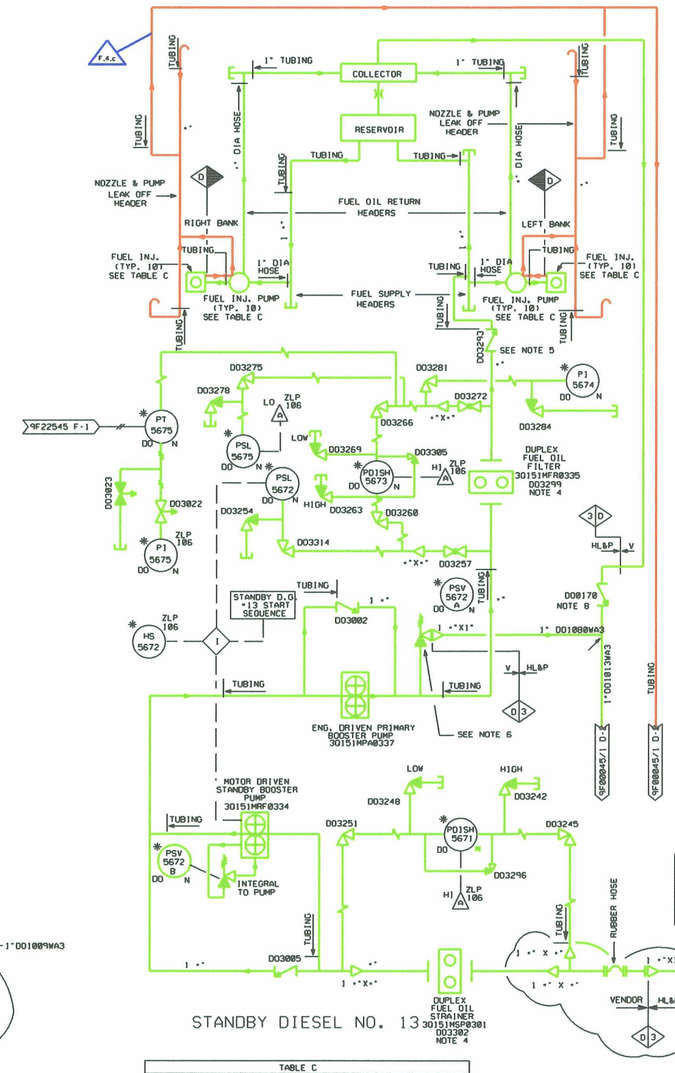

TABLE A		
CYL NO.	FUEL INJECTOR NO.	FUEL INJECTOR PUMP NO.
1 LEFT BANK	30151MNZ0134A	30151MPA0500A
2 LEFT BANK	30151MNZ0134B	30151MPA0500B
3 LEFT BANK	30151MNZ0134C	30151MPA0500C
4 LEFT BANK	30151MNZ0134D	30151MPA0500D
5 LEFT BANK	30151MNZ0134E	30151MPA0500E
6 LEFT BANK	30151MNZ0134F	30151MPA0500F
7 LEFT BANK	30151MNZ0134G	30151MPA0500G
8 LEFT BANK	30151MNZ0134H	30151MPA0500H
9 LEFT BANK	30151MNZ0134J	30151MPA0500J
10 LEFT BANK	30151MNZ0134K	30151MPA0500K
1 RIGHT BANK	30151MNZ0134L	30151MPA0500L
2 RIGHT BANK	30151MNZ0134M	30151MPA0500M
3 RIGHT BANK	30151MNZ0134N	30151MPA0500N
4 RIGHT BANK	30151MNZ0134P	30151MPA0500P
5 RIGHT BANK	30151MNZ0134Q	30151MPA0500Q
6 RIGHT BANK	30151MNZ0134R	30151MPA0500R
7 RIGHT BANK	30151MNZ0134S	30151MPA0500S
8 RIGHT BANK	30151MNZ0134T	30151MPA0500T
9 RIGHT BANK	30151MNZ0134U	30151MPA0500U
10 RIGHT BANK	30151MNZ0134V	30151MPA0500V

TABLE B		
CYL NO.	FUEL INJECTOR NO.	FUEL INJECTOR PUMP NO.
1 LEFT BANK	30151MNZ0234A	30151MPA0501A
2 LEFT BANK	30151MNZ0234B	30151MPA0501B
3 LEFT BANK	30151MNZ0234C	30151MPA0501C
4 LEFT BANK	30151MNZ0234D	30151MPA0501D
5 LEFT BANK	30151MNZ0234E	30151MPA0501E
6 LEFT BANK	30151MNZ0234F	30151MPA0501F
7 LEFT BANK	30151MNZ0234G	30151MPA0501G
8 LEFT BANK	30151MNZ0234H	30151MPA0501H
9 LEFT BANK	30151MNZ0234J	30151MPA0501J
10 LEFT BANK	30151MNZ0234K	30151MPA0501K
1 RIGHT BANK	30151MNZ0234L	30151MPA0501L
2 RIGHT BANK	30151MNZ0234M	30151MPA0501M
3 RIGHT BANK	30151MNZ0234N	30151MPA0501N
4 RIGHT BANK	30151MNZ0234P	30151MPA0501P
5 RIGHT BANK	30151MNZ0234Q	30151MPA0501Q
6 RIGHT BANK	30151MNZ0234R	30151MPA0501R
7 RIGHT BANK	30151MNZ0234S	30151MPA0501S
8 RIGHT BANK	30151MNZ0234T	30151MPA0501T
9 RIGHT BANK	30151MNZ0234U	30151MPA0501U
10 RIGHT BANK	30151MNZ0234V	30151MPA0501V

TABLE C		
CYL NO.	FUEL INJECTOR NO.	FUEL INJECTOR PUMP NO.
1 LEFT BANK	30151MNZ0334A	30151MPA0502A
2 LEFT BANK	30151MNZ0334B	30151MPA0502B
3 LEFT BANK	30151MNZ0334C	30151MPA0502C
4 LEFT BANK	30151MNZ0334D	30151MPA0502D
5 LEFT BANK	30151MNZ0334E	30151MPA0502E
6 LEFT BANK	30151MNZ0334F	30151MPA0502F
7 LEFT BANK	30151MNZ0334G	30151MPA0502G
8 LEFT BANK	30151MNZ0334H	30151MPA0502H
9 LEFT BANK	30151MNZ0334J	30151MPA0502J
10 LEFT BANK	30151MNZ0334K	30151MPA0502K
1 RIGHT BANK	30151MNZ0334L	30151MPA0502L
2 RIGHT BANK	30151MNZ0334M	30151MPA0502M
3 RIGHT BANK	30151MNZ0334N	30151MPA0502N
4 RIGHT BANK	30151MNZ0334P	30151MPA0502P
5 RIGHT BANK	30151MNZ0334Q	30151MPA0502Q
6 RIGHT BANK	30151MNZ0334R	30151MPA0502R
7 RIGHT BANK	30151MNZ0334S	30151MPA0502S
8 RIGHT BANK	30151MNZ0334T	30151MPA0502T
9 RIGHT BANK	30151MNZ0334U	30151MPA0502U
10 RIGHT BANK	30151MNZ0334V	30151MPA0502V

REFERENCES:

1. BECHTEL LOG 4041-00103-CE & FUEL OIL PORTION OF BECHTEL LOG 4041-01185-CE.
2. INCLUDES AS-BUILT CONDITIONS DEVELOPED FROM WALKDOWNS.

NOTES:

1. DELETED
2. ALL INSTRUMENTS SHOWN ON THIS P&ID HAVE SEPARATION GROUP "N" UNLESS OTHERWISE NOTED.
3. ALL INSTRUMENTS SHOWN ON THIS P&ID HAVE SYSTEM DESIGNATOR DO.
4. DUPLEX FILTER/STRAINER WITH THROWBY INTEGRAL ISOLATION VALVE.
5. THE CHECK VALVES DO-3291, DO-3292 AND DO-3293 INTERNALS WERE REMOVED. NOT REQUIRED BECAUSE OF OVERHEAD FOST.
6. THE FUEL OIL BOOSTER PUMP LINE PRESSURE OF 35 PSIG IS OBTAINED BY SETTING THIS RELIEF VALVE TO 20 PSIG AND UTILIZING THE STATIC PRESSURE ON THIS VALVE WHICH IS APPROXIMATELY 15 PSIG.
7. DESCRIPTION FOR THE NON ASME SECTION III CLASS 3 COMPONENTS SUPPLIED WITH THE ESF DG SETS.

   THE ENGINE MOUNTED COMPONENTS AND PIPING FROM THE ENGINE BLOCK TO THE ENGINE INTERFACE ARE CONSIDERED PART OF THE ENGINE ASSEMBLY AND ARE SEISMICALLY QUALIFIED TO CATEGORY I REQUIREMENTS. THIS PIPING AND ASSOCIATED COMPONENTS SUCH AS VALVES, MANUFACTURED HEADERS, FITTINGS, ETC. ARE DESIGNED, MANUFACTURED AND TESTED IN ACCORDANCE WITH THE GUIDELINES AND REQUIREMENTS OF DEMA, ANSI B31.1, ANSI N45.2 AND 10CFR50 APPENDIX B QA. THE DEMA STANDARDS PROVIDE ASSURANCE THAT THESE AUXILIARIES ARE DESIGNED, FABRICATED, ERECTED, AND TESTED TO QUALITY STANDARDS COMMENSURATE WITH THE SAFETY FUNCTION TO BE PERFORMED.
8. THE INTERNALS OF CHECK VALVES DO0168, DO0169, AND DO0170 HAVE BEEN REMOVED.

D082

VENDOR SYMBOLS

PDI	PRESS. DIFF. ALARM HIGH PRESS. DIFF. INDICATOR		OVERSPEED AIR TRIP VALVE-RESET
	ORIFICE		
	ROTARY PUMP		AIR MANIFOLD TEMP. CONTROL VALVE
	VENT		
	FLEXIBLE CONNECTION		CHOKE CHECK VALVE
			SHUTTLE VALVE
	CHECK VALVE		EXCESSIVE FLOW CHECK

SAFETY TRIP VALVE

OVERSPEED FUEL SHUT-OFF TRIP VALVE

OVERSPEED AIR SHUT-OFF TRIP VALVE

TEMPERATURE CONTROL VALVE

AIR PRESSURE REGULATOR

AIR MANIFOLD TEMP. CONTROL VALVE

VIBRATION MONITOR TRIP VALVE

GENERATOR BEARING TEMP. TRIP VALVE

SOLENOID VALVE

TEMPERATURE TRIP VALVE

CRANKING INTERLOCK /TURNING GEAR

FILTER/SEPARATOR WITH DRAIN

OIL PRESSURE TRIP VALVE

FILTER

PRESSURE SAFETY VALVE

PRECOOLER AMBIENT AIR (FAN DRIVEN)

AIR OPERATED CONTROL VALVE

ESSED DGN	NO.	ISSUE DATE	REVISION	ORIG	CKR	RE	DV	SE	NO.	ISSUE DATE	REVISION	ORIG	CKR	RE	DV	SE
	10		REVISED PER CR 0016034-1	JGL												
	0-9	10-29-90	ISSUED FOR CONSTRUCTION & INC. ECN 90-M-0024-A	SIGNATURES ON FILE												

SOUTH TEXAS PROJECT
NUCLEAR OPERATING COMPANY

PIPING & INSTRUMENTATION DIAGRAM
STANDBY DIESEL
FUEL OIL

PRIORITY	CADD FILE NO.	FSUG. NO.	STI. NO.	SCALE	DWG. NO.	SHT.	REV.
1	FJA351.101	D070928		NONE	5Q159F00045#1	2	10

LR BOUNDRY DRAWING NO.	REV.
LR-STP-DO-5Q159F00045#1-2	0B