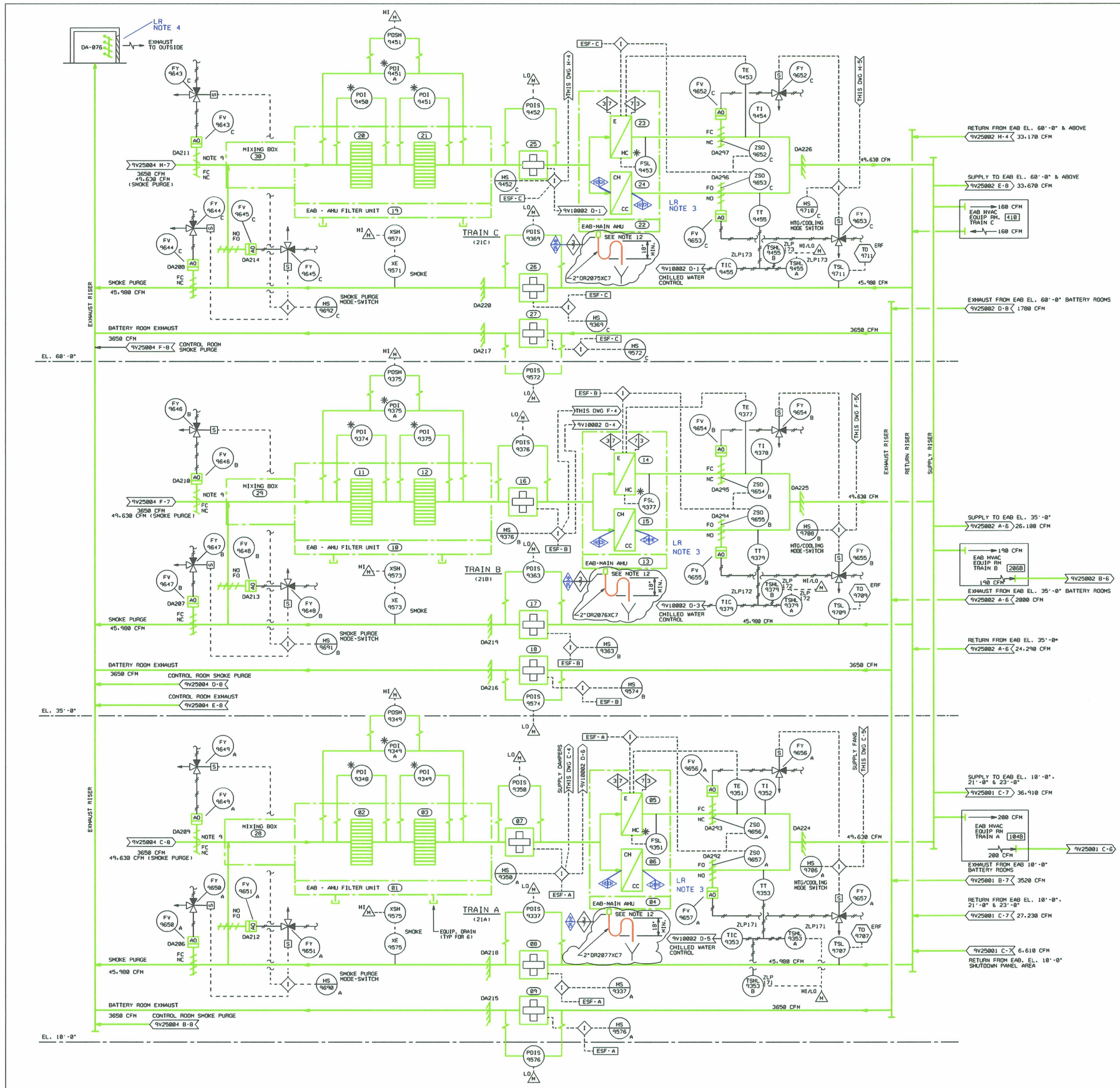

EQUIPMENT NUMBERING INDEX

KEY NO.	EQUIPMENT NUMBER	DESCRIPTION
01	3V112VXV007	AHU FILTER UNIT (TRAIN A) (11A)
02	3V112VFD004	UNIT 01 PRE FILTER (11A)
03	3V112VFD010	UNIT 01 HIGH EFF. FILTER (11A)
04	3V112VAH001	MAINAIRE HANDLING UNIT (TRAIN A) (11A)
05	8V112VHX009	AHU 04 HEATING COIL (11A)
06	3V112VHX007	AHU 04 COOLING COIL (11A)
07	3V112VFN014	SUPPLY FAN (TRAIN A) (11A)
08	3V112VFN001	RETURN FAN (TRAIN A) (11A)
09	3V112VFN010	BATTERY ROOM EXHAUST FAN (TRAIN A) (11A)
10	3V112VXV008	AHU FILTER UNIT (TRAIN B) (11B)
11	3V112VFD005	UNIT 10 PRE FILTER (11B)
12	3V112VFD011	UNIT 10 HIGH EFF. FILTER (11B)
13	3V112VAH002	MAIN AIR HANDLING UNIT (TRAIN B) (11B)
14	8V112VHX012	AHU 13 HEATING COIL (11B)
15	3V112VHX010A & B	AHU 13 COOLING COIL (11B)
16	3V112VFN015	SUPPLY FAN (TRAIN B) (11B)
17	3V112VFN002	RETURN FAN (TRAIN B) (11B)
18	3V112VFN011	BATTERY ROOM EXHAUST FAN (TRAIN B) (11B)
19	3V112VXV009	AHU FILTER UNIT (TRAIN C) (11C)
20	3V112VFD006	UNIT 19 PRE FILTER (11C)
21	3V112VFD012	UNIT 19 HIGH EFF. FILTER (11C)
22	3V112VAH003	MAIN AIR HANDLING UNIT (TRAIN C) (11C)
23	8V112VHX015	UNIT 22 HEATING COIL (11C)
24	3V112VHX013	UNIT 22 COOLING COIL (11C)
25	3V112VFN016	SUPPLY FAN (TRAIN C) (11C)
26	3V112VFN003	RETURN FAN (TRAIN C) (11C)
27	3V112VFN012	BATTERY ROOM EXHAUST FAN (TRAIN C) (11C)
28	3V112VHX058	AHU FILTER UNIT MIXING BOX (TRAIN A)
29	3V112VHX059	AHU FILTER UNIT MIXING BOX (TRAIN B)
30	3V112VHX059	AHU FILTER UNIT MIXING BOX (TRAIN C)

LR NOTES:
1. HEATERS HOUSINGS ARE PART OF THE PRESSURE BOUNDARY FOR SR DUCTS.
2. DUCTS DO NOT HAVE A STRUCTURAL INTEGRITY FUNCTION TO ATTACHED SR COMPONENTS.
3. THE COOLING COIL DETAILS ARE SHOWN ON STP-LR-CH-3V119V10002 #2
4. THE EXHAUST LOUVER IS EVALUATED AS STRUCTURAL STEEL AS PART OF THE STRUCTURE. THIS LOUVER IS NOT PHYSICALLY CONNECTED TO THE TORNADO DAMPER.

NOTES:

1. ALL SYSTEMS SHOWN ARE SAFETY CLASS 3 EXCEPT THOSE NOTED WHICH ARE NNS. ALL NNS DUCTWORK ARE HVAC EQUIPMENT SUPPORTS ARE DESIGNED TO MEET QUALITY CLASS 7 REQUIREMENTS.
2. ALL DAMPER NUMBERS SHOWN HAVE PREFIX 3V111V.
3. ALL INSTRUMENTS ON THIS P&ID HAVE SYSTEM DESIGNATOR "HE".
4. DELETED.
5. ALL INSTRUMENTS ON THIS P&ID HAVE SEPARATION GROUP "N" UNLESS OTHERWISE NOTED AT 5 O'CLOCK POSITION.
6. INSTRUMENTS MARKED WITH * ARE FURNISHED BY THE CORRESPONDING EQUIPMENT VENDOR.
7. ROOM NUMBERS ARE AS SHOWN ON ARCHITECTURAL DWGS.
8. DELETED
9. OUTSIDE AIR DAMPERS DA-209,210 & 211 STAY PARTLY OPEN IN THE FC MODE.
10. ALL AIR FLOW CFMS SHOWN ARE AT STANDARD CONDITIONS (SCFM).
11. ALL EQUIPMENT DRAINS SHOWN ARE 2" SIZE.
12. ACCEPTABLE ALTERNATE MATERIALS:
    A. USE ASTM A312 TYPE 304, 304L, 316, 316L SCH.80 PIPE WITH ASTM A182 3000* SCRD. FITTINGS. EITHER SCH.80 OR SCH.40 PIPE MAY BE USED WITH 3000* S.W. FITTINGS.
    B. USE ASTM A106 GR.B SCH.80 PIPE WITH ASTM A105 3000* SCRD FITTINGS. EITHER SCH. 80 OR SCH.40 PIPE MAY BE USED WITH ASTM A105 3000* S.W. FITTINGS.
    C. USE ASTM A53 GR. B TYPE S SCH. 80 GALV. PIPE OR ASTM A106 GR. B C.S. SCH 80 PIPE WITH ASTM A105 3000* THREADED GALV. FITTINGS.
13. FOR ACTUAL AIR FLOW QUANTITIES, SEE THE AS-BUILT CONDITION SHOWN ON THE FINAL AIR BALANCING REPORT C035(2)00017-3M FOR UNIT-2

REFERENCE DWG:

0F00001	P&ID STANDARD ABBREVIATIONS & SYMBOLS
0F00002	P&ID STANDARD ABBREVIATIONS & SYMBOLS
1 & 2-A-1030	ARCHITECTURAL DWGS.
1 & 2-A-1032	
1 & 2-A-1033	
1 & 2-A-1034	
1 & 2-A-1035	
1 & 2-A-1036	
9V10002	ESSENTIAL CHW SYSTEM P&ID

2160

LR BOUNDARY DRAWING NO.	REV.
LR-STP-HE-5V119V25000#2	0A

NO.	ISSUE DATE	REVISION	ORIG	CKR	RE	DV	SE
16	10-15-82	INCORP. DCN 9800898.	NF				
	12-16-82	ISSUED FOR CONSTRUCTION.	SIGNATURES ON FILE				

NO.	ISSUE DATE	REVISION	ORIG	CKR	RE	DV	SE

SOUTH TEXAS PROJECT NUCLEAR OPERATING COMPANY

PRIORITY	RMSECM NO.	DOC.CTL.NO.	CADD FILE NO.
1	5V119V25000#2	D070928	FJA721.161

PIPING & INSTRUMENTATION DIAGRAM - HVAC
ELECTRICAL AUXILIARY BLDG
MAIN AREA SYSTEM

SCALE	DWG. NO.	REV.
NONE	5V119V25000#2	16

ESEED.DGN