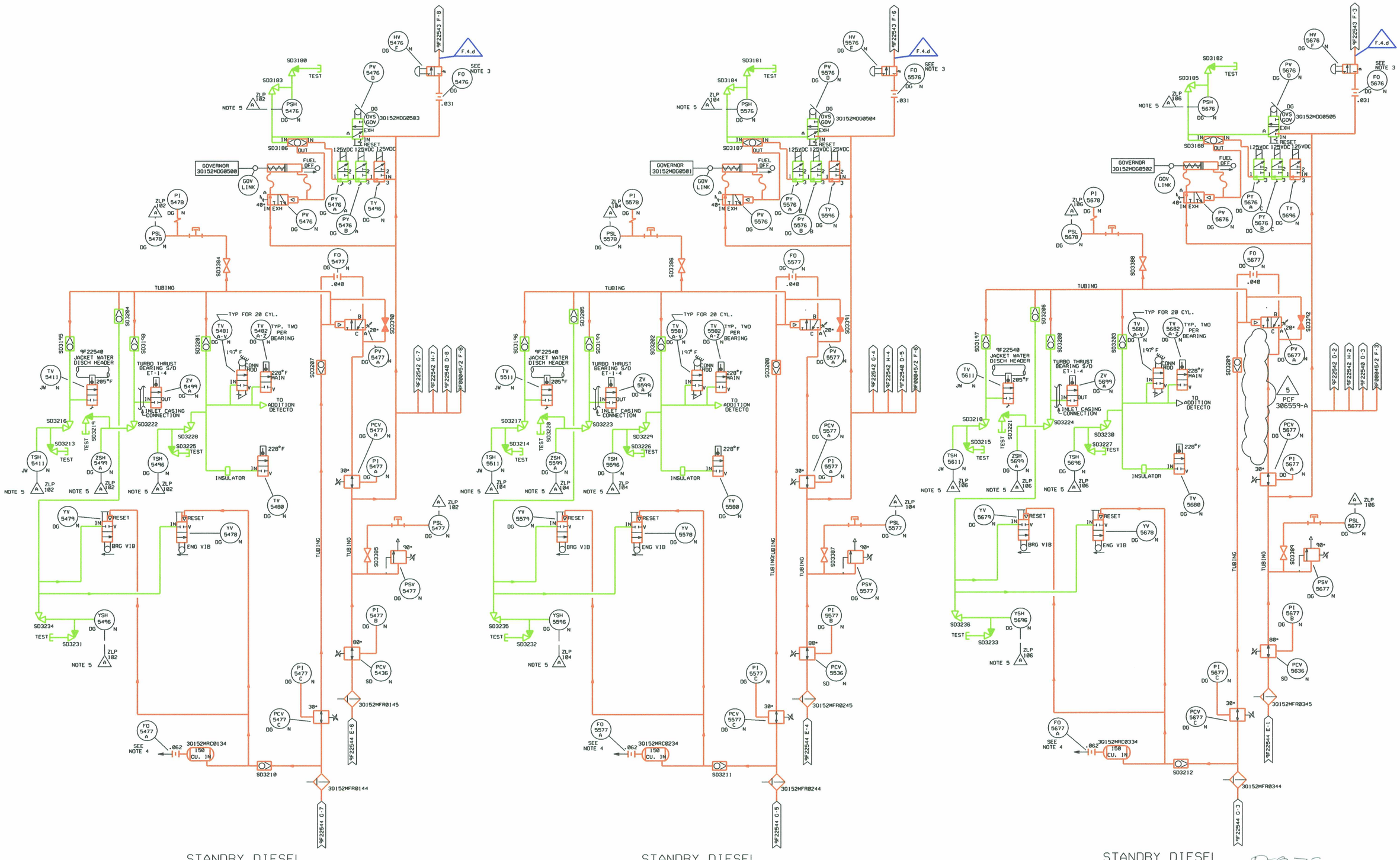

REFERENCES:
1. BECHTEL LOG 8041-00147-CE & SHUTDOWN SYSTEM PORTION OF 8041-01184-CE.
2. INCLUDES AS-BUILT CONDITIONS DEVELOPED FROM WALKDOWN.

NOTES:
1. SEE DWG. 5Q159F00045 SHT 2 FOR VENDOR SYMBOLS.
2. REFER TO DWG. 9A310F00001 AND 9A310F00002 FOR IDENTIFICATION NUMBER DETAILS.
3. ORIFICE IS LOCATED IN THE 'IN' PORT OF VALVE.
4. ORIFICE IS DRILLED IN THE PIPE PLUG LOCATED ON THE TOP OF THE TANK.
5. DIESEL IS ALSO SHUTDOWN IF OPERATING IN THE TEST MODE.

LR NOTE:
COMPONENTS HIGHLIGHTED IN GREEN ARE SAFETY-RELATED AND IN SCOPE OF LICENSE RENEWAL FOR (A)(1) CONSIDERATIONS

LR BOUNDARY DRAWING NO.	REV.
LR-STP-DG-5Q159F22545#2	0

NO.	ISSUE DATE	REVISION	ORIG	CKR	RE	DV	SE
5		INCORP. PCF 306559-A	JGL				
4	7-3-95	INCORP. PCF 306558-A	SIGNATURES ON FILE				
3	6-21-95	INCORP. PCF 306557A.	SIGNATURES ON FILE				
2	5-24-94	INCORP. ECNP'S 92M0029-AF, 92M0029-AY AND EDITORIALS FOR UNITIZATION	SIGNATURES ON FILE				
1	7-1-92	INCORP. DCN MD-2069	SIGNATURES ON FILE				
0	10-12-90	ISSUED FOR CONSTRUCTION	SIGNATURES ON FILE				

SOUTH TEXAS PROJECT NUCLEAR OPERATING COMPANY

PIPING & INSTRUMENTATION DIAGRAM
STANDBY DIESEL
SHUTDOWN SYSTEM

PRIORITY	CADD FILE NO.	FSUG. NO.	STI. NO.	SCALE	DWG. NO.	SHT.	REV.
1	FJA047.071			NONE	5Q159F22545	#2	5

FJA047 7/12/88

FJA777.051