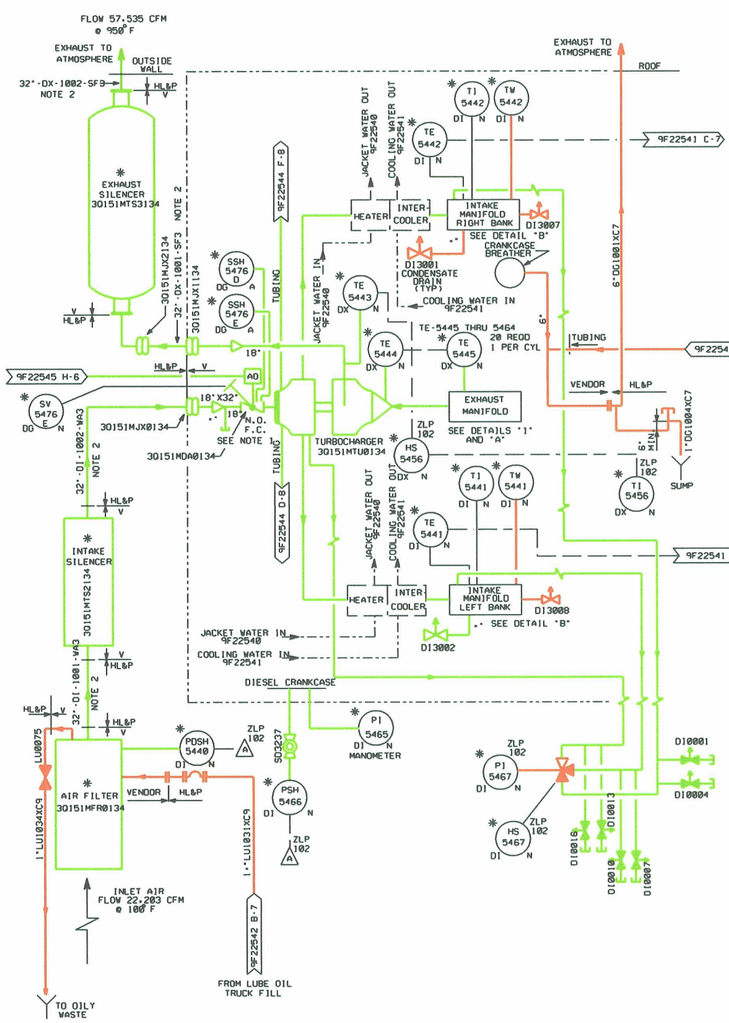

STANDBY DIESEL
NO. 11

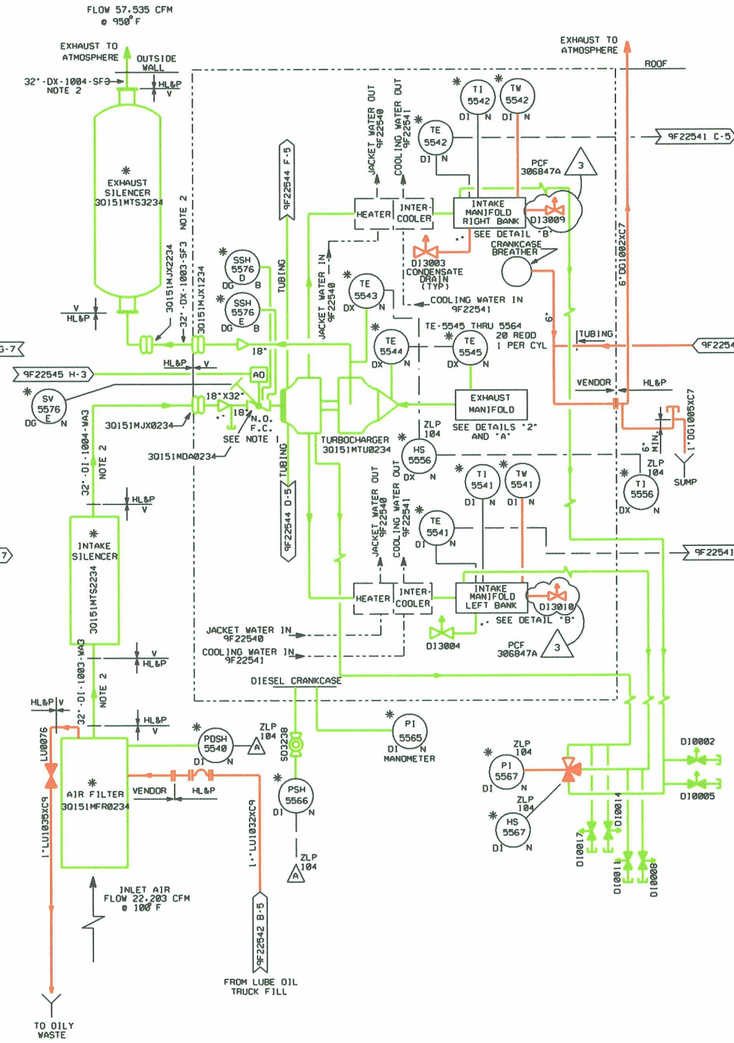

STANDBY DIESEL
NO. 12

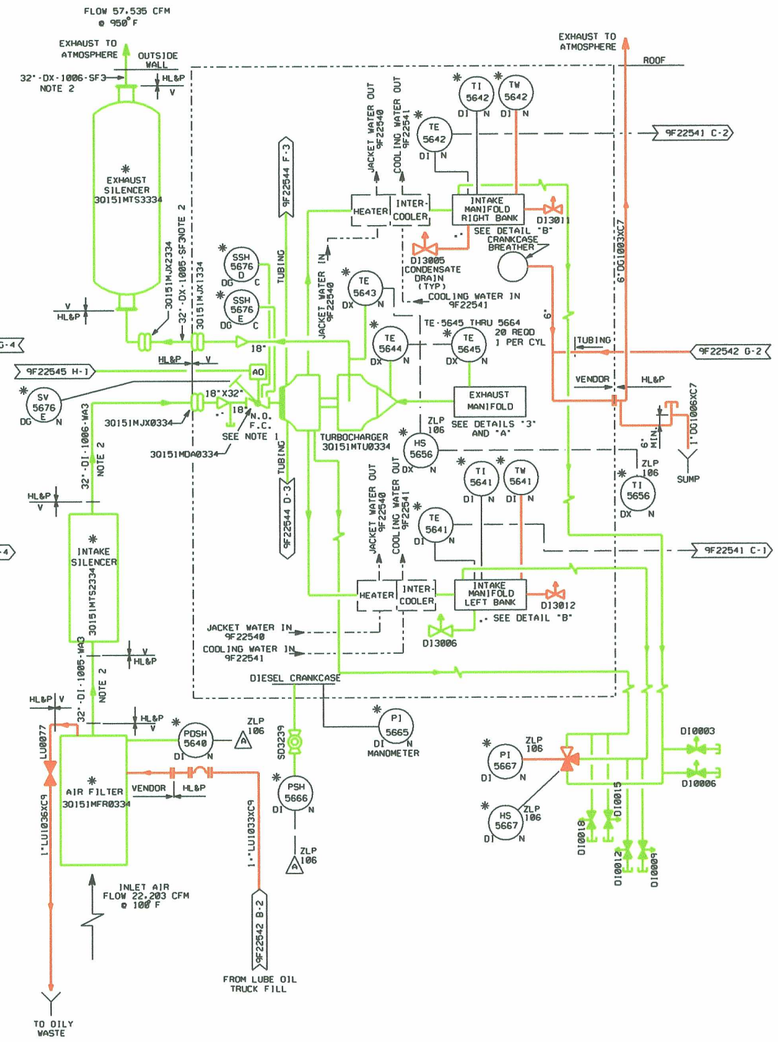

STANDBY DIESEL
NO. 13

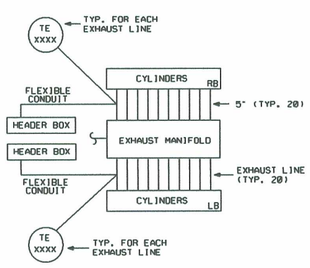

DETAIL "A"

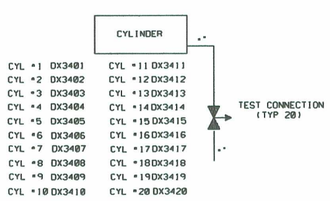

TEST VALVE ON EACH CYLINDER
DETAIL 1

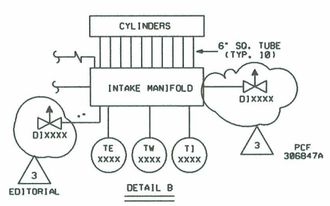

DETAIL B

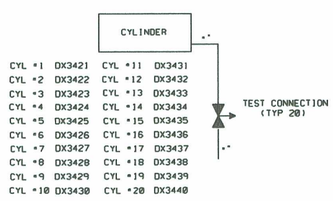

TEST VALVE ON EACH CYLINDER
DETAIL 2

LR NOTE:
COMPONENTS HIGHLIGHTED IN GREEN ARE SAFETY-RELATED AND IN SCOPE OF LICENSE RENEWAL FOR (a)(1) CONSIDERATIONS

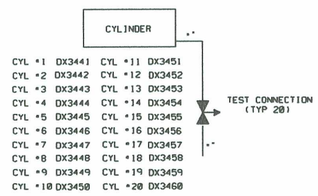

TEST VALVE ON EACH CYLINDER
DETAIL 3

REFERENCES:
1. BECHTEL LOG 4041-00102-CE & AIR INTAKE AND EXHAUST SYSTEM PORTION OF 4041-01185-CE.
2. AIR INTAKE AND EXHAUST SYSTEM PORTION OF P&ID 5Q159F00060 #1.
3. INCLUDES AS-BUILT CONDITIONS DEVELOPED FROM WALKDOWN.

NOTES:
1. WHEN THE OVERSPEED GOVERNOR TRIPS, THE LEVER LOCKING THE BUTTERFLY VALVE OPEN IS RELEASED TO CLOSE BY A CABLE FROM THE GOVERNOR. THE BUTTERFLY VALVE MAY BE MANUALLY RESET OR REMOTELY RESET BY A PNEUMATIC RESET CONTROL VALVE.
2. D.G. INLET AND EXHAUST LINES ARE PURCHASED TO ASME III REQUIREMENTS. SIESMICALLY DESIGNED, INSTALLED TO B31.1 AND WELDED TO ASME SECTION IX.
3. REFER TO DWGS. 9A310F00001 AND 9A310F00002 FOR IDENTIFICATION NUMBER DETAILS.
4. ASME CODE CASE N-253 PROVIDES THE BASIS FOR CODE STAMPING PIPING WHICH IS TO EXPERIENCE TEMPERATURES ABOVE THOSE PROVIDED IN ASME SECTION III, 1974 THROUGH 1976 SUMMER ADDENDA: DIVISION 1.

TABLE 1

COMPONENT	SEISMIC CAT.	* SAFETY CLASS	DESIGN STANDARD
INTAKE AIR EXPANSION JOINT	I	3	MANUFACTURER'S STANDARD
EXHAUST AIR EXPANSION JOINT	I	3	MANUFACTURER'S STANDARD
INLET AIR FILTER	I	3	MANUFACTURER'S STANDARD
INLET AIR SILENCERS	I	3	MANUFACTURER'S STANDARD
EXHAUST AIR SILENCERS	I	3	MANUFACTURER'S STANDARD

* NOT STAMPED

9073

LR BOUNDARY DRAWING NO.	REV
LR-STP-DG-5Q159F22543*1	0B

NO.	ISSUE DATE	REVISION	BY	CKR	RE	DV	NA	SE	PE
3		INCORP. PCF 306847A & EDITORIAL (CORRECTED VALVE TYPE)	KS						
2	6-20-95	INCORP. PCFS 306845A & 306848A.	SIGNATURES ON FILE						
1	7-7-92	INCORP. DCN MD02070	SIGNATURES ON FILE						
0	10-12-90	ISSUED FOR CONSTRUCTION	SIGNATURES ON FILE						

EDWG.DCN

HOUSTON LIGHTING & POWER COMPANY
SOUTH TEXAS PROJECT ELECTRIC GENERATING STATION

PIPING & INSTRUMENTATION DIAGRAM
STANDBY DIESEL
AIR INTAKE & EXHAUST

SCALE	DWG. NO.	REV.
NONE	5Q159F22543 #1	3

PRIORITY 1 DC.NO. D070928 FJA355.031