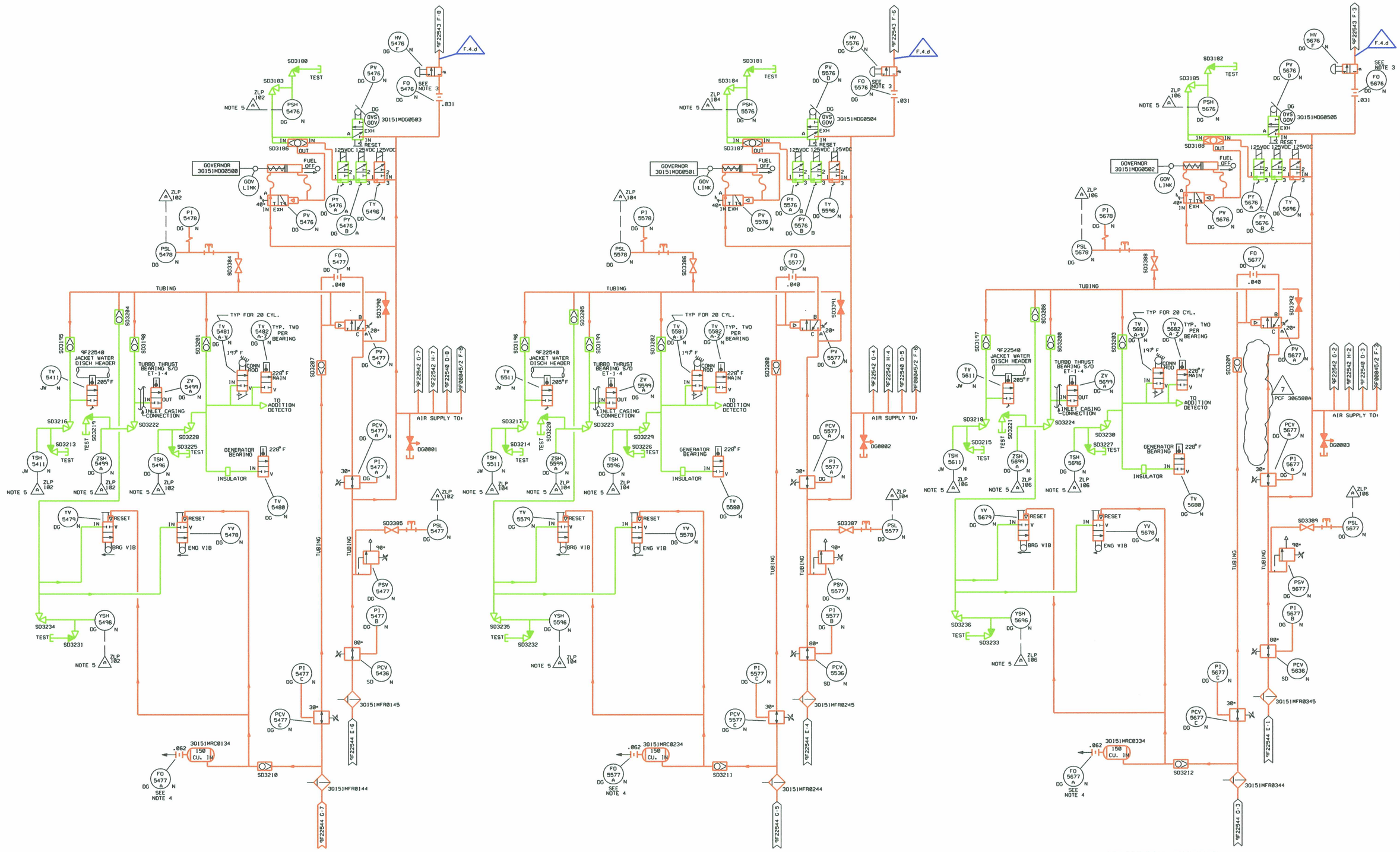

REFERENCES:

1. BECHTEL LOG 4041-00139-CE & SHUTDOWN SYSTEM PORTION OF 4041-01185-CE.
2. INCLUDES AS-BUILT CONDITIONS DEVELOPED FROM WALKDOWN.

NOTES:

1. SEE DWG. 5Q159F00045 SHT 2 FOR VENDOR SYMBOLS.
2. UNLESS OTHERWISE NOTED. UNIT ONEDENTIFICATION NUMBERS ARE SHOWN ON THIS P&ID. REFER TO DWGS. 9A310F00001 AND9A310F00002 FOR IDENTIFICATION NUMBER DETAILS.
3. ORIFICE IS LOCATED IN THE "IN" PORT OF VALVE.
4. ORIFICE IS DRILLED IN PIPE PLUG LOCATED ON THE END OF THE TANK.
5. DIESEL IS ALSO SHUTDOWN IF OPERATINOIN THE TEST MODE.

D077

LR NOTE:
COMPONENTS HIGHLIGHTED IN GREEN ARE SAFETY-RELATED AND IN SCOPE OF LICENSE RENEWAL FOR (a)(1) CONSIDERATIONS

LR BOUNDARY DRAWING NO.	REV
LR-STP-DG-5Q159F22545*1	0A

NO.	ISSUE DATE	REVISION	BY	CKR	RE	DV	NA	SE	PE	NO.	ISSUE DATE	REVISION	BY	CKR	RE	DV	NA	SE	PE
5	3-15-95	INCORP. PCF 306570A	SIGNATURES ON FILE																
4	1-26-95	EDITORIAL FOR DRAFTING ERROR	SIGNATURES ON FILE																
3	9-14-94	EDITORIAL FOR DRAFTING ERROR	SIGNATURES ON FILE																
2	1-10-94	INCORP. ECN #92M0028-A. AB AND AI	SIGNATURES ON FILE																
1	6-1-92	INCORP. DCN MD-2069	SIGNATURES ON FILE							7		INCORP. PCF 306580A.	VJM						
0	10-12-90	ISSUED FOR CONSTRUCTION	SIGNATURES ON FILE							6	7-10-95	INCORP. PCF 306579A.	SIGNATURES ON FILE						

EDWG.DGN

HOUSTON LIGHTING & POWER COMPANY
SOUTH TEXAS PROJECT ELECTRIC GENERATING STATION

PIPING & INSTRUMENTATION DIAGRAM
STANDBY DIESEL
SHUTDOWN SYSTEM

SCALE	DWG. NO.	REV.
NONE	5Q159F22545 #1	7

PRIORITY 1 DC.NO. D070928 FJA357.071

VJM