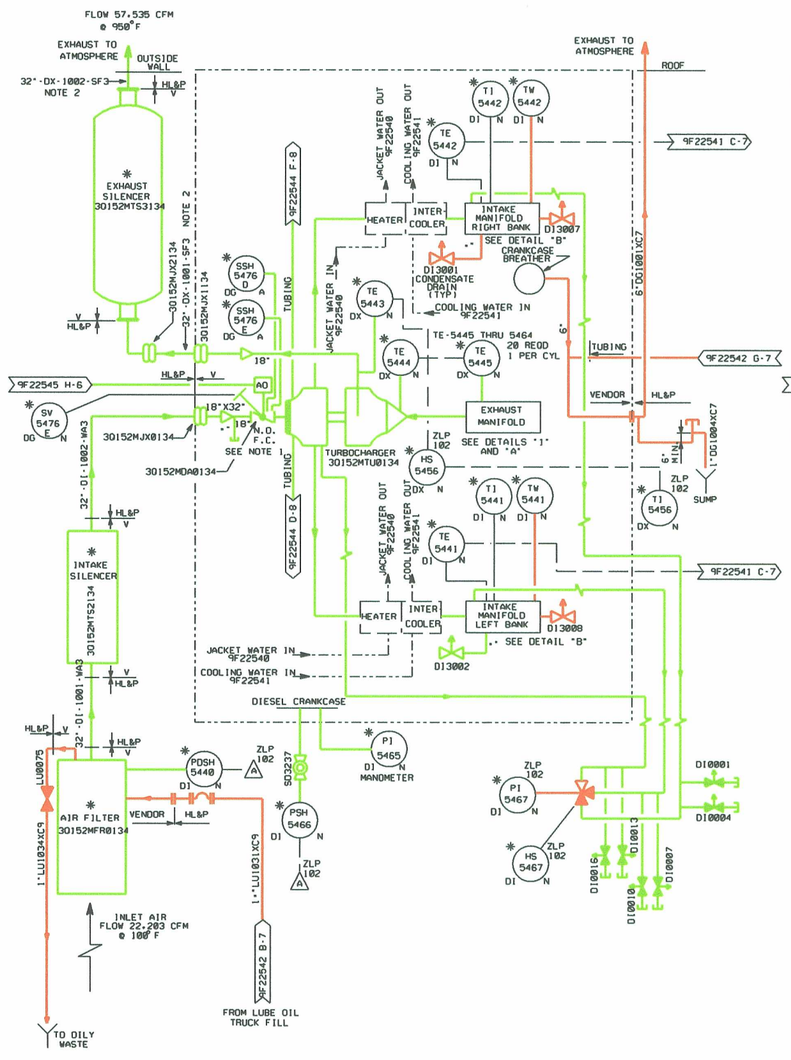

STANDBY DIESEL
NO. 21

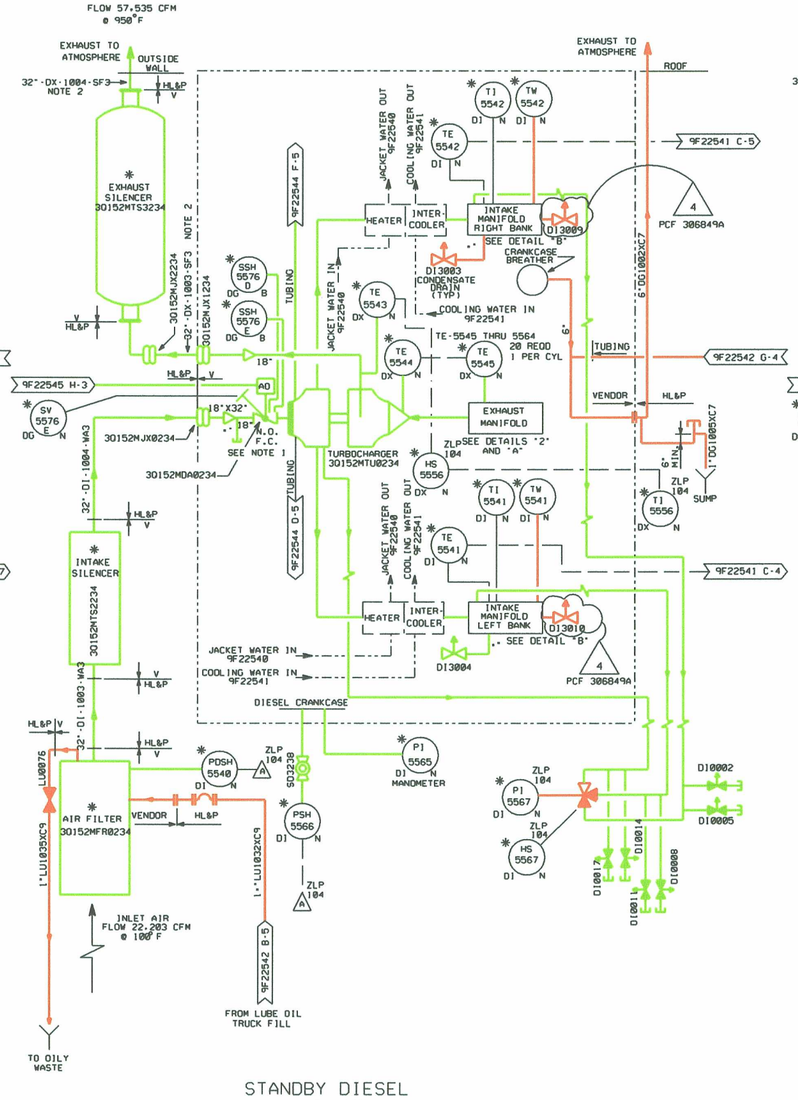

STANDBY DIESEL
NO. 22

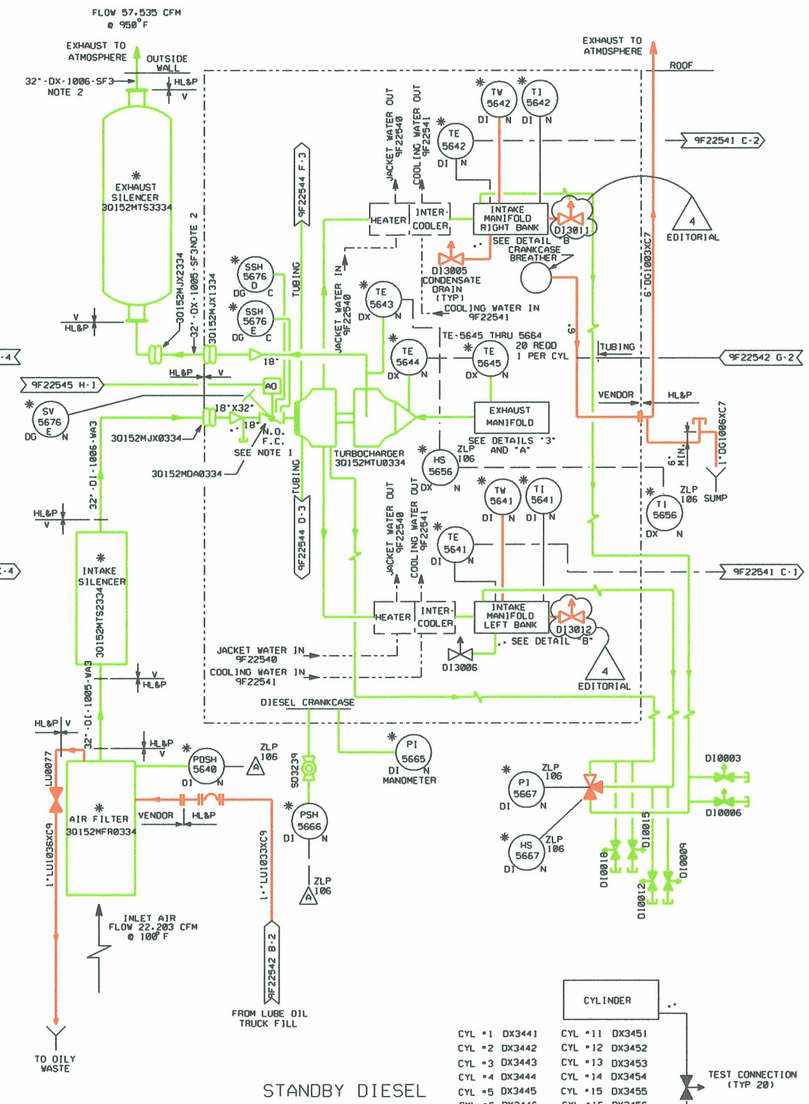

STANDBY DIESEL
NO. 23

CYLINDER	
CYL #1 DX3441	CYL #11 DX3451
CYL #2 DX3442	CYL #12 DX3452
CYL #3 DX3443	CYL #13 DX3453
CYL #4 DX3444	CYL #14 DX3454
CYL #5 DX3445	CYL #15 DX3455
CYL #6 DX3446	CYL #16 DX3456
CYL #7 DX3447	CYL #17 DX3457
CYL #8 DX3448	CYL #18 DX3458
CYL #9 DX3449	CYL #19 DX3459
CYL #10 DX3450	CYL #20 DX3460

TEST VALVE ON EACH CYLINDER
DETAIL 3

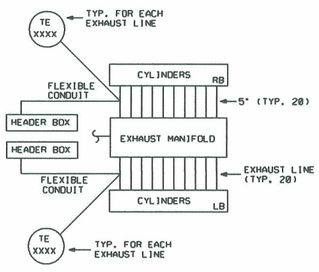

DETAIL "A"

CYLINDER	
CYL #1 DX3401	CYL #11 DX3411
CYL #2 DX3402	CYL #12 DX3412
CYL #3 DX3403	CYL #13 DX3413
CYL #4 DX3404	CYL #14 DX3414
CYL #5 DX3405	CYL #15 DX3415
CYL #6 DX3406	CYL #16 DX3416
CYL #7 DX3407	CYL #17 DX3417
CYL #8 DX3408	CYL #18 DX3418
CYL #9 DX3409	CYL #19 DX3419
CYL #10 DX3410	CYL #20 DX3420

TEST VALVE ON EACH CYLINDER
DETAIL 1

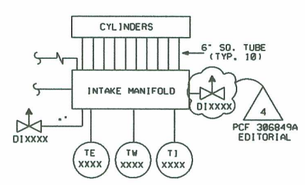

DETAIL B

CYLINDER	
CYL #1 DX3421	CYL #11 DX3431
CYL #2 DX3422	CYL #12 DX3432
CYL #3 DX3423	CYL #13 DX3433
CYL #4 DX3424	CYL #14 DX3434
CYL #5 DX3425	CYL #15 DX3435
CYL #6 DX3426	CYL #16 DX3436
CYL #7 DX3427	CYL #17 DX3437
CYL #8 DX3428	CYL #18 DX3438
CYL #9 DX3429	CYL #19 DX3439
CYL #10 DX3430	CYL #20 DX3440

TEST VALVE ON EACH CYLINDER
DETAIL 2

LR NOTE:
COMPONENTS HIGHLIGHTED IN GREEN ARE SAFETY-RELATED AND IN SCOPE OF LICENSE RENEWAL FOR (a)(1) CONSIDERATIONS

REFERENCES:
1. BECHTEL LOG 8041-00107-CE & AIR INTAKE AND EXHAUST PORTION OF 8041-01184-CE.
2. AIR INTAKE AND EXHAUST PORTION OF P&ID 5Q159F00060 #2.
3. INCLUDES AS-BUILT CONDITIONS DEVELOPED FROM WALKDOWN.

NOTES:
1. WHEN THE OVERSPEED GOVERNOR TRIPS, THE LEVER LOCKING THE BUTTERFLY VALVE OPEN IS RELEASED TO CLOSE BY A CABLE FROM THE GOVERNOR. THE BUTTERFLY VALVE MAY BE MANUALLY RESET OR REMOTELY RESET BY A PNEUMATIC RESET CONTROL VALVE.
2. D.G. INLET AND EXHAUST LINES ARE PURCHASED TO ASME III REQUIREMENTS, SIESMICALLY DESIGNED, INSTALLED TO B31.1 AND WELDED TO ASME SECTION IX.
3. UNLESS OTHERWISE NOTED, UNIT ORIDENTIFICATION NUMBERS ARE SHOWN ON THIS P&ID. FOR APPLICATION ON THIS P&ID TO UNIT 2, USE UNIT 2IDENTIFICATION NUMBERS FOR PIPING, VALVES, INSTRUMENTS EQUIPMENT, ETC.. REFER TO DWG. 9A310F00001 AND 9A310F00002 FOR IDENTIFICATION NUMBER DETAILS.
4. ASME CODE CASE N-253 PROVIDES THE BASIS FOR CODE STAMPING PIPING WHICH IS TO EXPERIENCE TEMPERATURES ABOVE THOSE PROVIDED IN ASME SECTION III, 1974 THROUGH 1976 SUMMER ADDENDA, DIVISION 1.

TABLE 1

COMPONENT	SEISMIC CAT.	* SAFETY CLASS	DESIGN STANDARD
INTAKE AIR EXPANSION JOINT	I	3	MANUFACTURER'S STANDARD
EXHAUST AIR EXPANSION JOINT	I	3	MANUFACTURER'S STANDARD
INLET AIR FILTER	I	3	MANUFACTURER'S STANDARD
INLET AIR SILENCERS	I	3	MANUFACTURER'S STANDARD
EXHAUST AIR SILENCERS	I	3	MANUFACTURER'S STANDARD

* NOT STAMPED

D074

LR BOUNDARY DRAWING NO.	REV.
LR-STP-DG-5Q159F22543#2	0A

NO.	ISSUE DATE	REVISION	ORIG	CKR	RE	DV	SE
4		INCORP. PCF 306849A.	CR				
3	6-12-95	INCORP. PCF 306846A.	SIGNATURES ON FILE				
2	6-1-95	INCORP. PCF 306850A	SIGNATURES ON FILE				
1	6-15-92	INCORP. DCN MD02070	SIGNATURES ON FILE				
0	10-12-90	ISSUED FOR CONSTRUCTION	SIGNATURES ON FILE				

NO.	ISSUE DATE	REVISION	ORIG	CKR	RE	DV	SE

SOUTH TEXAS PROJECT
NUCLEAR OPERATING COMPANY

PIPING & INSTRUMENTATION DIAGRAM
STANDBY DIESEL
AIR INTAKE & EXHAUST

PRIORITY	CADD FILE NO.	FSUG. NO.	STI. NO.	SCALE	DWG. NO.	SHT.	REV.
1	FJA775.041			NONE	5Q159F22543	#2	4

8 7 6 5 4 3 2 CR PRIORITY 1 1 FJA775.041