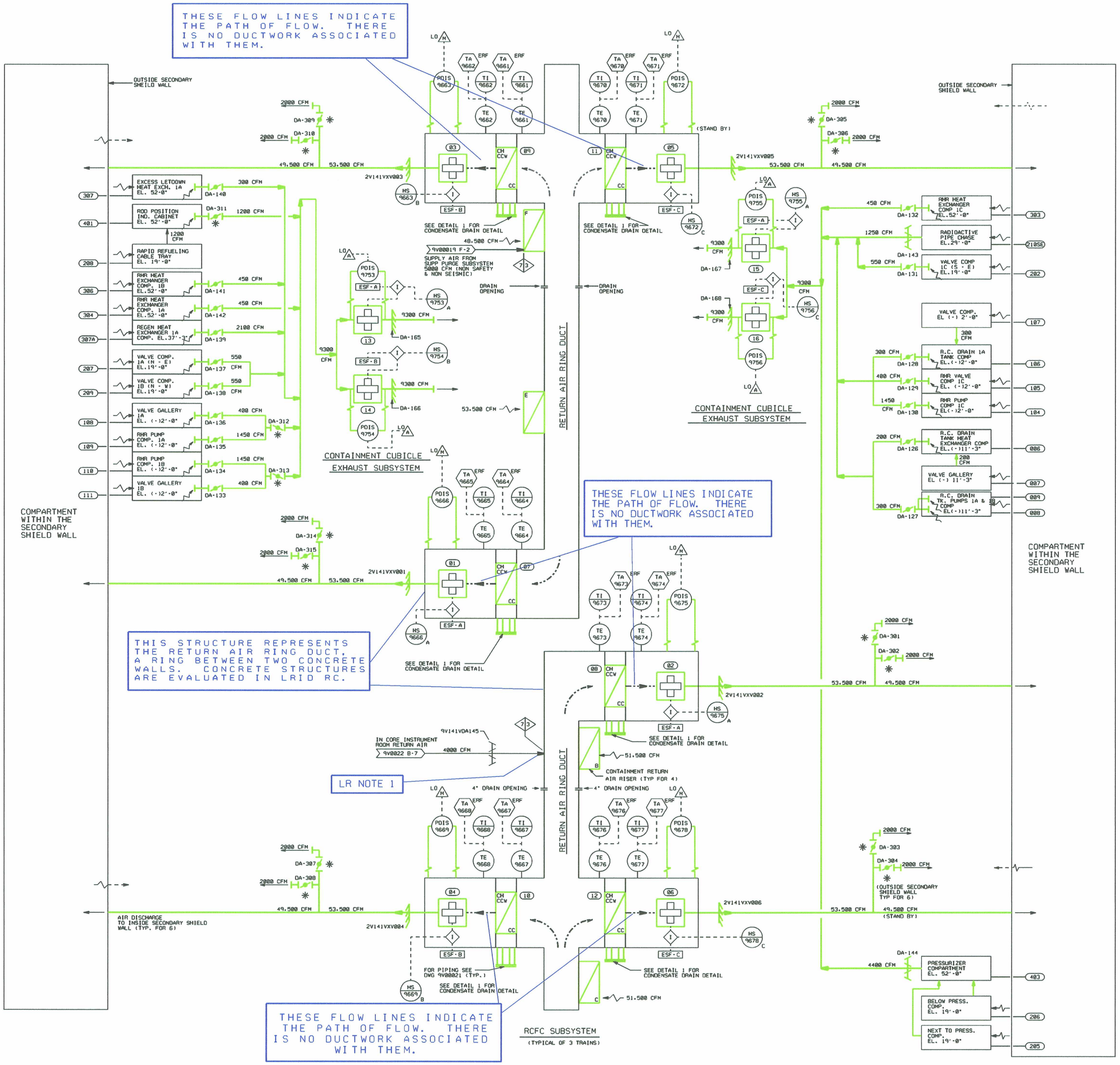

EQUIPMENT NUMBERING INDEX

KEY NO	EQUIPMENT NUMBER	DESCRIPTION
01	2V141VFN001	RCFC SUPPLY FAN (11A)
02	2V141VFN002	RCFC SUPPLY FAN (12A)
03	2V141VFN003	RCFC SUPPLY FAN (11B)
04	2V141VFN004	RCFC SUPPLY FAN (12B)
05	2V141VFN005	RCFC SUPPLY FAN (11C)
06	2V141VFN006	RCFC SUPPLY FAN (12C)
07	2V141VHX001	RCFC COOLING COIL (11A)
08	2V141VHX002	RCFC COOLING COIL (12A)
09	2V141VHX003	RCFC COOLING COIL (11B)
10	2V141VHX004	RCFC COOLING COIL (12B)
11	2V141VHX005	RCFC COOLING COIL (11C)
12	2V141VHX006	RCFC COOLING COIL (12C)
13	3V141VFN027	CONT. CUB. EXH. FAN (11A)
14	3V141VFN028	CONT. CUB. EXH. FAN (11B)
15	3V141VFN029	CONT. CUB. EXH. FAN (12A)
16	3V141VFN030	CONT. CUB. EXH. FAN (12B)

GENERAL NOTES:

1. THE RCFC SUBSYSTEM IS SAFETY CLASS 2 (EXCEPT CONTAINMENT CUBICLES EXHAUST SUBSYSTEM IS SAFETY CLASS 3) UNLESS NOTED OTHERWISE.
2. ALL DAMPER NUMBERS EXCEPT THOSE NOTED HAVE THE PREFIX 3V141.
3. DELETED
4. * THESE VOLUME DAMPERS ARE SUPPLIED BY HVAC CONTRACTOR.
5. ALL INSTRUMENTS ON THIS P & ID HAVE SYSTEM DESIGNATOR "HC".
6. ALL INSTRUMENTS ON THIS P & ID HAVE SEPARATION GROUP "N" UNLESS OTHERWISE NOTED AT THE FIVE O'CLOCK POSITION.
7. RETURN AIR RISERS, RING DUCT, RCFC ENCLOSURES AND DISCHARGE AIR DUCTS (EXCEPT 2000 CFM BRANCHES) ARE BY OTHERS. THESE COMPONENTS INCLUDING 2000 CFM BRANCHES ARE SAFETY CLASS 3.
8. AIR QUANTITIES ARE IN SCFM.
9. FOR UNIT 1 ACTUAL AS BUILT CFM'S REFER TO JCI FINAL AIR BALANCE TEST & BALANCE REPORT UNDER BECHTEL LOG NO. 14926-C035(01)-00021-3H.

REFERENCE DRAWINGS:

9V0083	HVAC PHYSICAL LAYOUTS
9V0089	HVAC PHYSICAL LAYOUTS
PCF 179383A 10 9V0092	HVAC PHYSICAL LAYOUTS
9Z41630	I & C LOGIC DIAGRAM
0F00001	P&ID STANDARD ABBREVIATIONS & SYMBOLS.
0F00002	P&ID STANDARD ABBREVIATIONS & SYMBOLS.

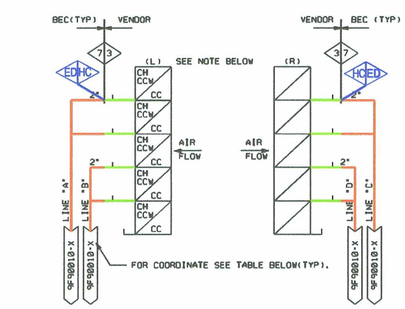

DETAIL 1
CONDENSATE DRAIN DETAIL

COOLING COIL 2V141VHX	LINE NUMBER A	B	C	D	X
001	2"ED1502TC7	2"ED1503TC7	2"ED1504TC7	2"ED1505TC7	C-4
002	2"ED1506TC7	2"ED1507TC7	2"ED1508TC7	2"ED1509TC7	H-7
003	2"ED1510TC7	2"ED1511TC7	2"ED1512TC7	2"ED1513TC7	C-2
004	2"ED1514TC7	2"ED1515TC7	2"ED1516TC7	2"ED1517TC7	C-7
005	2"ED1518TC7	2"ED1519TC7	2"ED1520TC7	2"ED1521TC7	C-1
006	2"ED1522TC7	2"ED1523TC7	2"ED1524TC7	2"ED1525TC7	H-8

LR NOTE 1:
DUCTING IS CONSIDERED A FLEXIBLE CONNECTION WHICH DOES NOT TRANSFER SEISMIC INTERATIONS TO ATTACHED COMPONENTS

D145

LR BOUNDARY DRAWING NO.	REV.
LR-STP-HC-5V149V00016*1	0B

NO.	ISSUE DATE	REVISION	BY	CKR	RE	DV	NA	SE	PE
10		INCORP. PCF 179383A	KS						
9	9-5-90	ML&P ASSUMES DESIGN CHANGE CONTROL & INCORP. HDCN 1 (CCP 1-M-FST-0276)	SIGNATURES ON FILE						
0-8	12/10/02	ISSUED FOR CONSTRUCTION	SIGNATURES ON FILE						

EDWG.DGN

HOUSTON LIGHTING & POWER COMPANY
SOUTH TEXAS PROJECT ELECTRIC GENERATING STATION

PIPING & INSTRUMENTATION DIAGRAM
HVAC REACTOR CONTAINMENT BUILDING
FAN COOLERS SUBSYSTEM

SCALE	DWG. NO.	REV.
NONE	5V149V00016 *1	10

KVS PRIORITY 1 DC.NO. 0070928 FJA243.10B