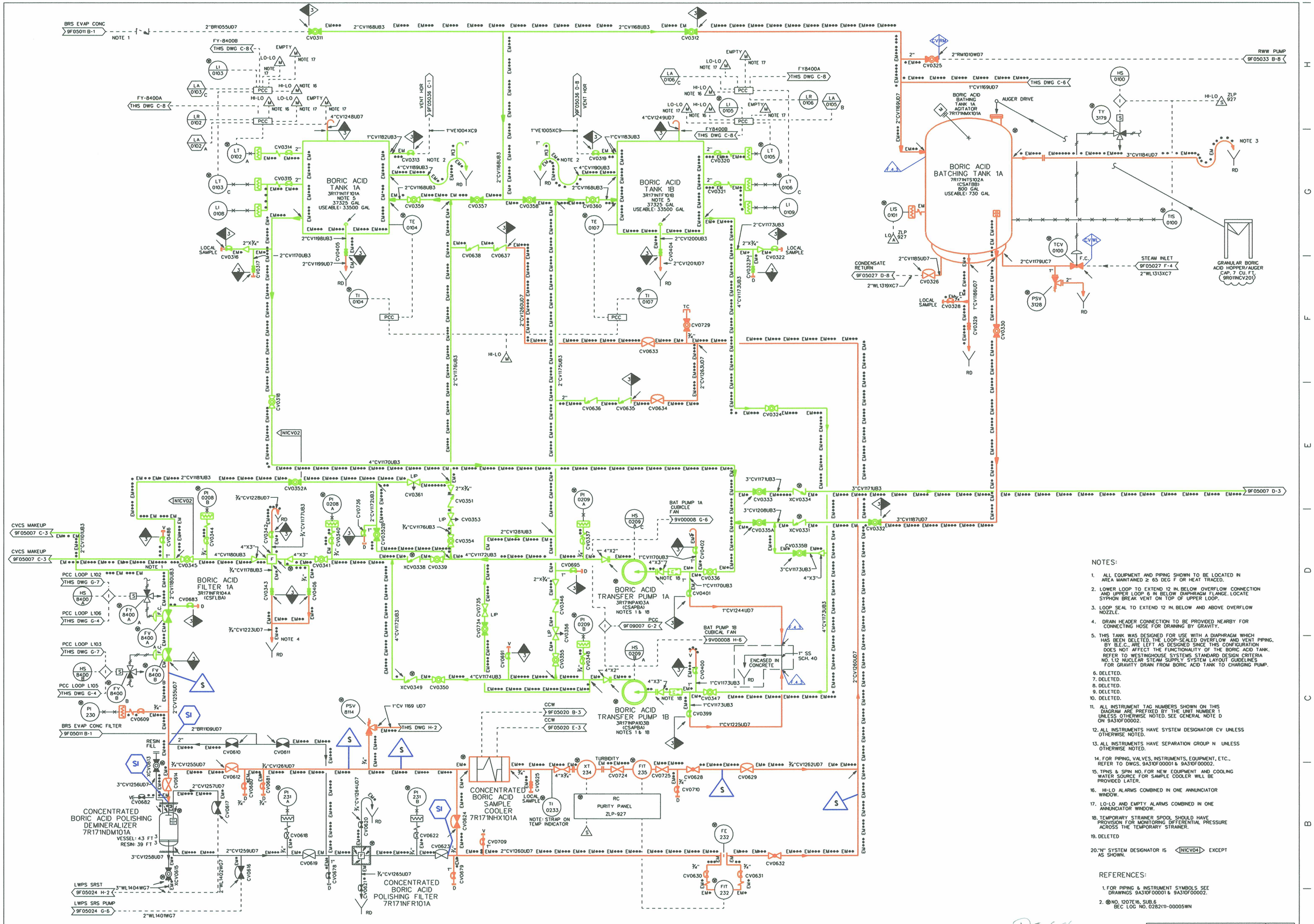

NOTES:

1. ALL EQUIPMENT AND PIPING SHOWN TO BE LOCATED IN AREA MAINTAINED ≥ 65 DEG F OR HEAT TRACED.
2. LOWER LOOP TO EXTEND 12 IN. BELOW OVERFLOW CONNECTION AND UPPER LOOP 6 IN BELOW DIAPHRAGM FLANGE. LOCATE SYPHON BREAK VENT ON TOP OF UPPER LOOP.
3. LOOP SEAL TO EXTEND 12 IN. BELOW AND ABOVE OVERFLOW NOZZLE.
4. DRAIN HEADER CONNECTION TO BE PROVIDED NEARBY FOR CONNECTING HOSE FOR DRAINING BY GRAVITY.
5. THIS TANK WAS DESIGNED FOR USE WITH A DIAPHRAGM WHICH HAS BEEN DELETED. THE LOOP-SEALED OVERFLOW AND VENT PIPING, BY B.E.C., ARE LEFT AS DESIGNED SINCE THIS CONFIGURATION DOES NOT AFFECT THE FUNCTIONALITY OF THE BORIC ACID TANK. REFER TO WESTINGHOUSE SYSTEMS STANDARD DESIGN CRITERIA NO. 1.12 NUCLEAR STEAM SUPPLY SYSTEM LAYOUT GUIDELINES FOR GRAVITY DRAIN FROM BORIC ACID TANK TO CHARGING PUMP.
6. DELETED.
7. DELETED.
8. DELETED.
9. DELETED.
10. DELETED.
11. ALL INSTRUMENT TAG NUMBERS SHOWN ON THIS DIAGRAM ARE PREFIXED BY THE UNIT NUMBER 1 UNLESS OTHERWISE NOTED. SEE GENERAL NOTE D ON 9A310F00002.
12. ALL INSTRUMENTS HAVE SYSTEM DESIGNATOR CV UNLESS OTHERWISE NOTED.
13. ALL INSTRUMENTS HAVE SEPARATION GROUP N UNLESS OTHERWISE NOTED.
14. FOR PIPING, VALVES, INSTRUMENTS, EQUIPMENT, ETC., REFER TO DWGS. 9A310F00001 & 9A310F00002.
15. TPNS & SPIN NO. FOR NEW EQUIPMENT AND COOLING WATER SOURCE FOR SAMPLE COOLER WILL BE PROVIDED LATER.
16. HI-LO ALARMS COMBINED IN ONE ANNUNCIATOR WINDOW.
17. LO-LO AND EMPTY ALARMS COMBINED IN ONE ANNUNCIATOR WINDOW.
18. TEMPORARY STRAINER SPOOL SHOULD HAVE PROVISION FOR MONITORING DIFFERENTIAL PRESSURE ACROSS THE TEMPORARY STRAINER.
19. DELETED
20. "N" SYSTEM DESIGNATOR IS N1CV04 EXCEPT AS SHOWN.

REFERENCES:

1. FOR PIPING & INSTRUMENT SYMBOLS SEE DRAWINGS 9A310F00001 & 9A310F00002.
2. NO. 1207E6, SUB.6 BEC LOG NO. 0282(1)-00005WN

D069

LR BOUDARY DRAWING NO.	REV.
LR-STP-CV-5R179F05009#1	0B

NO.	ISSUE DATE	REVISION	ORIG	CKR	RE	DV	SE
22		REVISED PER ENGINEERING REQUEST. (05-86-326).	VJM				
21	9-1-98	INCORP. DCN 9802182.	VJM	ON FILE			
20	11-18-97	EDITORIAL CHANGE. REF. CR#97-939 (CHANGE LINE # 1"CV1234 TO 1"CV1224).	SIGNATURES ON FILE				
0-19	4-21-84	ISSUED FOR CONSTRUCTION.	SIGNATURES ON FILE				

SOUTH TEXAS PROJECT NUCLEAR OPERATING COMPANY

PIPING AND INSTRUMENTATION DIAGRAM
CHEMICAL AND VOLUME CONTROL SYSTEM

PRIORITY	CADD FILE NO.	FSUG. NO.	STI. NO.	SCALE	DWG. NO.	SHT.	REV.
1	FJA193.221	D070928		NONE	5R179F05009#1		22

ESEED.DGN