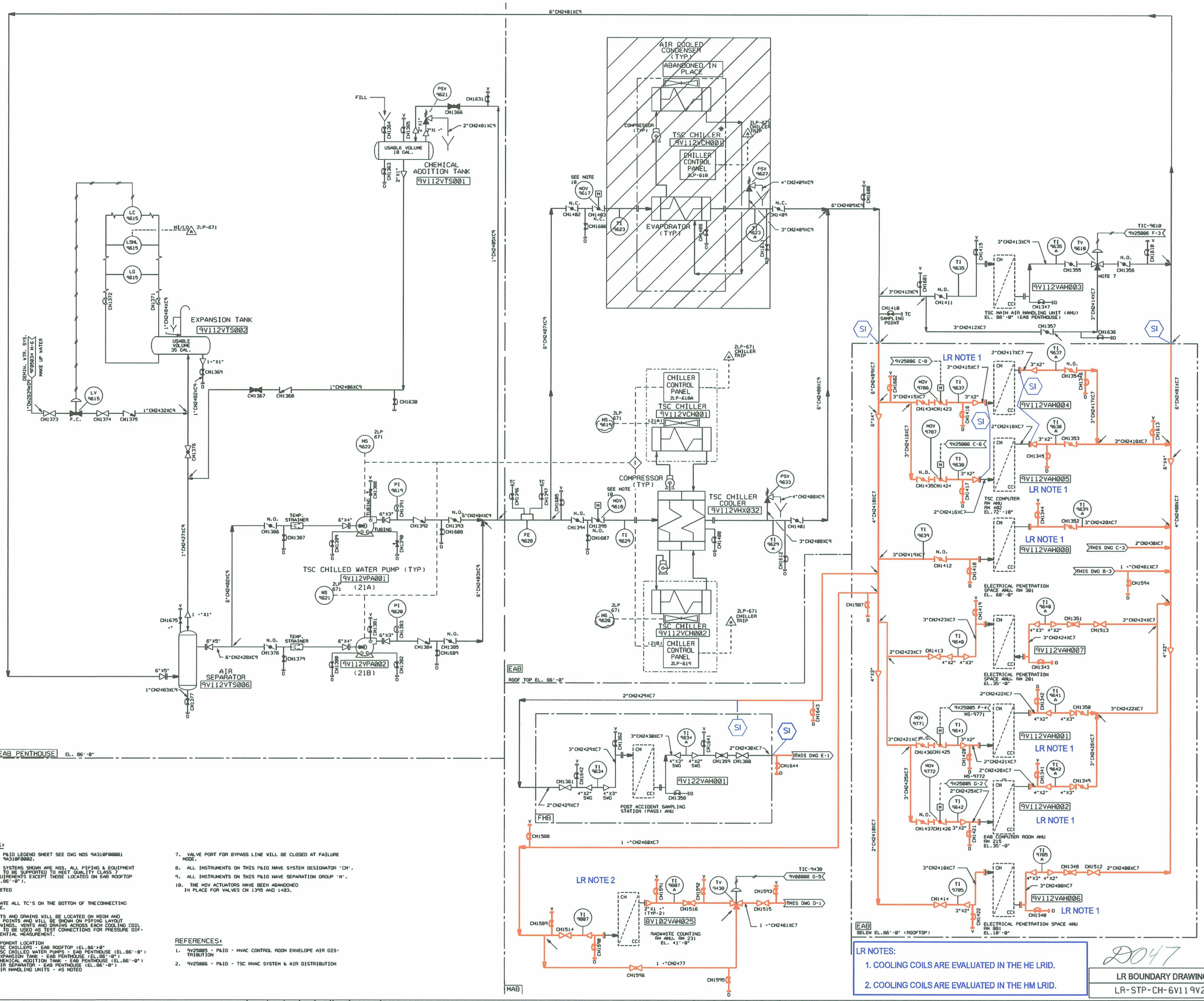

NOTES:

1. FOR P&ID LEGEND SHEET SEE DWG NOS 9A310F0001 AND 9A310F0002.
2. ALL SYSTEMS SHOWN ARE NSS. ALL PIPING & EQUIPMENT ARE TO BE SUPPORTED TO MEET QUALITY CLASS 7 REQUIREMENTS EXCEPT THOSE LOCATED ON EAB ROOFTOP (EL.86'-0").
3. DELETED
4. LOCATE ALL TC'S ON THE BOTTOM OF THE CONNECTING PIPE.
5. VENTS AND DRAINS WILL BE LOCATED ON HIGH AND LOW POINTS AND WILL BE SHOWN ON PIPING LAYOUT DRAWINGS. VENTS AND DRAINS ACROSS EACH COOLING COIL ARE TO BE USED AS TEST CONNECTIONS FOR PRESSURE DIFFERENTIAL MEASUREMENT.
6. COMPONENT LOCATION
   - TSC CHILLERS - EAB ROOFTOP (EL.86'-0"
   - TSC CHILLED WATER PUMPS - EAB PENTHOUSE (EL.86'-0")
   - EXPANSION TANK - EAB PENTHOUSE (EL.86'-0")
   - CHEMICAL ADDITION TANK - EAB PENTHOUSE (EL.86'-0")
   - AIR SEPARATOR - EAB PENTHOUSE (EL.86'-0")
   - AIR HANDLING UNITS - AS NOTED
7. VALVE PORT FOR BYPASS LINE WILL BE CLOSED AT FAILURE MODE.
8. ALL INSTRUMENTS ON THIS P&ID HAVE SYSTEM DESIGNATOR 'CH'.
9. ALL INSTRUMENTS ON THIS P&ID HAVE SEPARATION GROUP 'N'.
10. THE MOV ACTUATORS HAVE BEEN ABANDONED IN PLACE FOR VALVES CH 1395 AND 1403.

REFERENCES:

1. 9V25005 - P&ID - HVAC CONTROL ROOM ENVELOPE AIR DISTRIBUTION
2. 9V25006 - P&ID - TSC HVAC SYSTEM & AIR DISTRIBUTION

LR NOTES:

1. COOLING COILS ARE EVALUATED IN THE HE LRID.
2. COOLING COILS ARE EVALUATED IN THE HM LRID.

D047

LR BOUNDARY DRAWING NO.	REV.
LR-STP-CH-6V119V25007#2	0B

NO.	ISSUE DATE	REVISION	ORIG	CKR	RE	DV	SE
20		REVISED PER CR 00-9656-3.	VJM				
0-19	1-26-83	ISSUED FOR CONSTRUCTION.	SIGNATURES ON FILE				

ESSEED DGN

SOUTH TEXAS PROJECT
NUCLEAR OPERATING COMPANY

PIPING & INSTRUMENTATION DIAGRAM
HVAC TECHNICAL SUPPORT CENTER (TSC)
CHILLED WATER SYSTEM

PRIORITY	CADD FILE NO.	FSUG. NO.	STI. NO.	SCALE	DWG. NO.	SHT.	REV.
1	FJA728.201	D070928		NONE	6V119V25007#2		20