U.S. DEPARTMENT OF ENERGY

National Nuclear Security Administration
Defense Nuclear Nonproliferation

Global Threat Reduction Initiative (GTRI)

Off-Site Source Recovery Project:
Presentation for the Cesium Chloride Public Meeting

GTRI Overview

Mission

reduce and protect vulnerable nuclear and radiological material located at civilian sites worldwide.

Goals

1. Convert
2. Remove
3. Protect

Convert

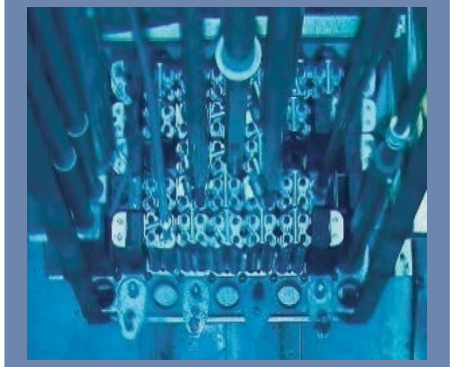

Convert research reactors and isotope production facilities from the use of highly enriched uranium (HEU) to low enriched uranium (LEU)

These efforts result in permanent threat reduction by minimizing and, to the extent possible, eliminating the need for HEU in civilian applications – each reactor converted or shut down eliminates a source of bomb material.

Remove

Remove and dispose of excess nuclear and radiological materials; and

These efforts result in permanent threat reduction by eliminating bomb material at civilian sites – each kilogram or curie of this dangerous material that is removed reduces the risk of a terrorist bomb.

Protect

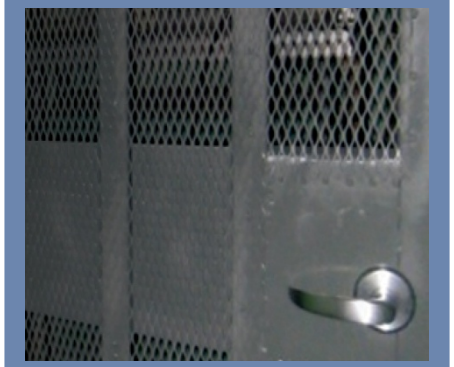

Protect high priority nuclear and radiological materials from theft and sabotage

These efforts result in threat reduction by improving security on the bomb material remaining at civilian sites – each vulnerable building that is protected reduces the risk until a permanent threat reduction solution can be implemented.

Off-Site Source Recovery Project (OSRP)

- Every year, thousands of sources become disused and unwanted in the United States.
- While secure storage is a temporary measure, the longer sources remain disused or unwanted the chances increase that they will become unsecured or abandoned. Thus, permanent disposal is essential.
- **OSRP - http://osrp.lanl.gov/**
  - To date, GTRI has recovered over 26,000 sources totaling over 780,000 Ci
  - GTRI primarily recovers Cs-137, Co-60, Sr-90, Am-241, Pu-238, Pu-239, Ra-226
  - Every potential recovery is different and must be considered and prioritized
  - GTRI partners with CRCPD on the Source Collection and Threat Reduction (SCATR) project which works with state regulators and licensees to round up sources with commercial disposal pathways

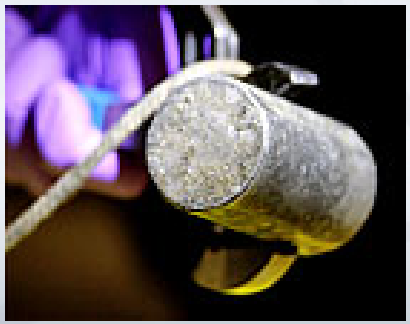

National Security and Disposal

Sealed Source Disposal and National Security: Problem Statement and Solution Set, Deliverable (Part 1) of the Removal and Disposition of Disused Sources Focus Group of the Radioisotopes Sub council of the NGCC and NSCC, December 9, 2009.

The lack of disposal pathways for radioactive sealed sources, which make up less than 1 percent of all low-level radioactive waste by volume and activity, poses a national security concern. During their service lives, these sources have numerous essential and beneficial medical, industrial, and research applications. However, due to their high activity and portability, some of these sources could be used either individually or in aggregate in radiological dispersal devices commonly referred to as "dirty bombs," resulting in economic impacts in the billions of dollars and significant social disruption. Every year, thousands of sources become disused and unwanted in the United States. While secure storage is a temporary measure, the longer sources remain disused or unwanted the chances increase that they will become unsecured or abandoned. Thus, permanent disposal is essential. However, only 14 States currently have commercial LLRW sealed source disposal access, and there are significant political, statutory, and regulatory challenges associated with the creation of commercial disposal access for the remaining 36 States.

Sources Registered as Disused and Unwanted On the GTRI/OSRP Database,October 4,2010

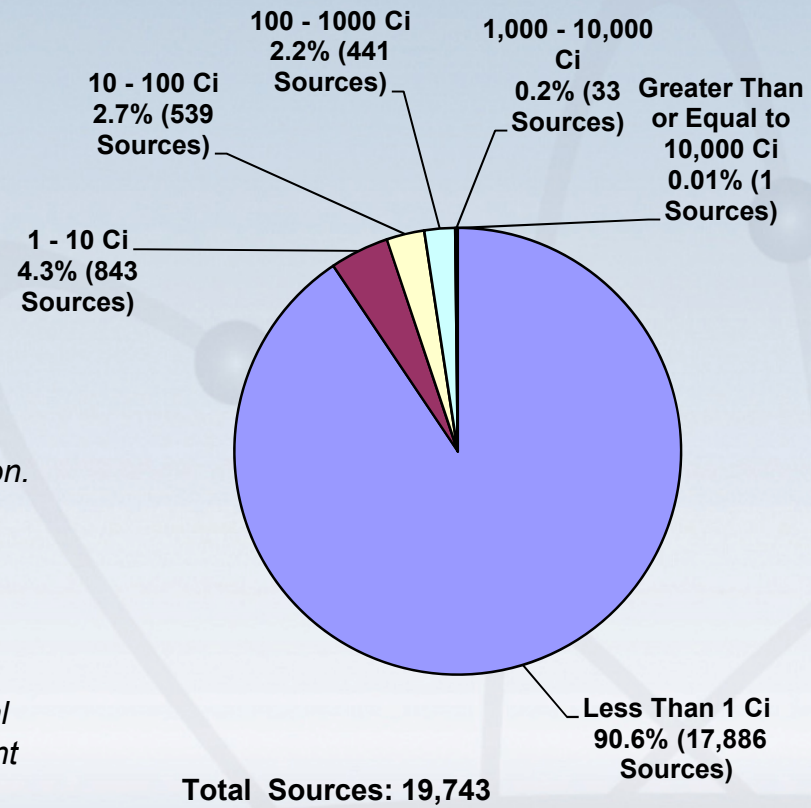

Sealed Source Commercial Disposal

- Only Barnwell and Richland can currently dispose of some of the commercial LLW sealed sources. Both sites are now closed to out-of-compact waste (except for Ra-226)

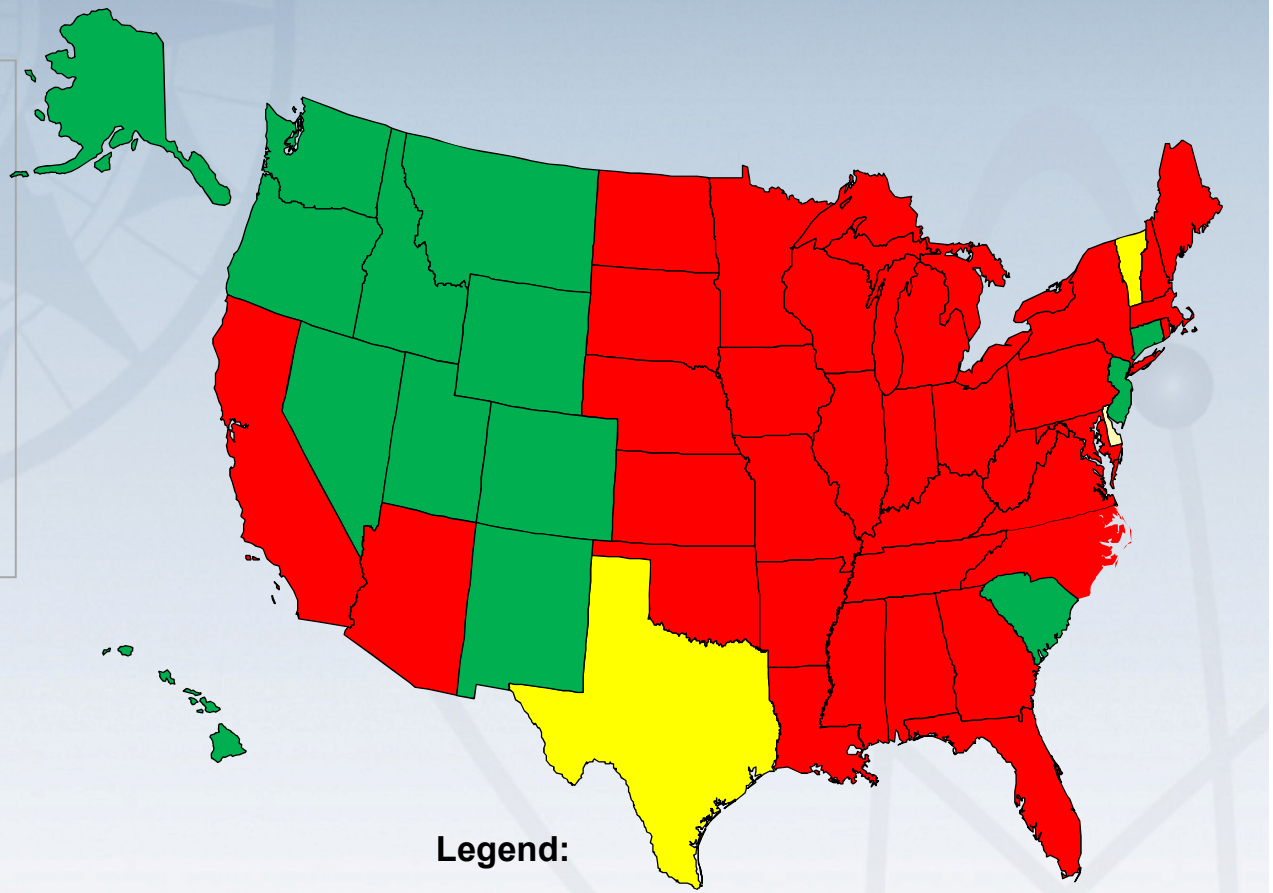

Legend:

No Sealed Source disposal available:

Some Sealed Source disposal available:

Disposal availability pending:

New Type B Container Design

In order to alleviate the limited availability of certified Type B for domestic recoveries and to repatriate consolidated sources to countries of origin, GTRI/OSRP is designing a new Type B container

- Contract awarded in September 2009. Container design will be DOE-owned, but the long-term goal is to make it available to contractors for use in recovery operations. Currently in conceptual design phase
- AREVA original concept will ideally carry the LTSS, and other devices.
- There was a pre-design public meeting with the NRC on August 25 (see next slide).

The next major milestones are as follows:

1. Submittal of detailed design to NRC – November 2010
2. Completion of full-scale testing – March 2011
3. Submittal of NRC review package – May 2011
4. Container approval and issuance of a certificate - March 2012

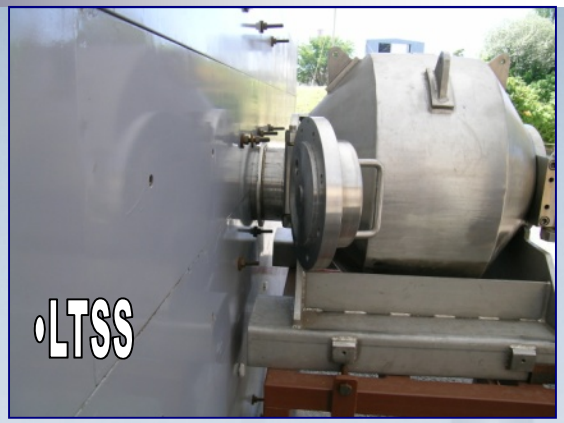

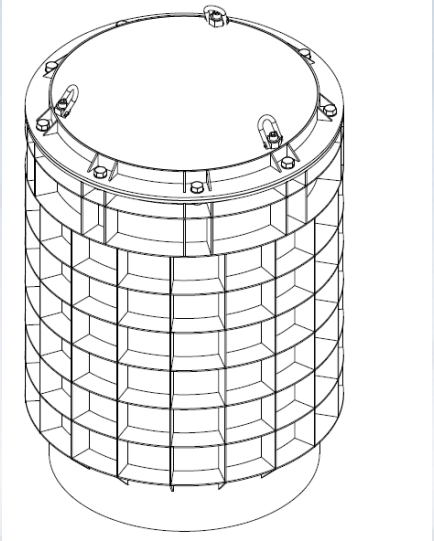

Possible Internal Support Concept

New Type B Container Design

AREVA Briefing to NRC on New Type B Container Design - This was primarily a preliminary technical review but a number of programmatic issues were raised. The container, itself, will not have shielding (in order to keep the size, weight and cost of the container down) so the shielding will come from either the devices/heads being recovered or, in cases where the mobile hot cell is used, from the LTSS. NRC suggested GTRI/LANL/AREVA consider:

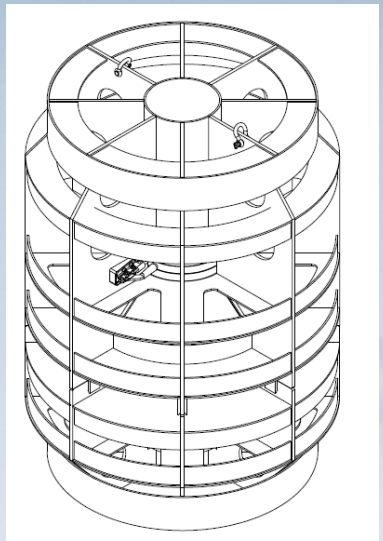

1. Including a list of specific models of devices with design drawings and analysis specific to each device's shielding, configuration and dimensions.
2. Designing an entirely new container with its own shielding.

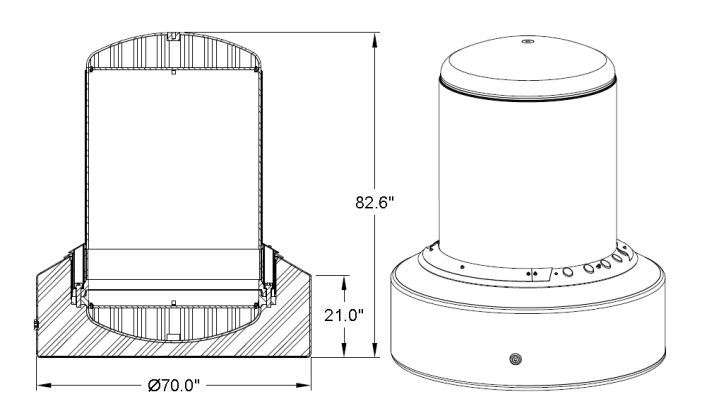

GTRI has decided to pursue both options.