3.8.5 Foundations and Concrete Supports

3.8.5.1 Description of Foundations and Supports

3.8.5.1.1 Primary Containment

The primary containment foundation consists of a 9-foot-thick circular reinforced concrete structural slab, measuring 131 feet 7 inches in diameter. The outer 5 feet, where adjacent to other structures (225° of the slab), is thickened to 16 feet, while the remaining 135° portion is thickened to 12 feet for the outer 13 feet. These deepened portions are transitioned upward on a 2 to 1 slope to the bottom of the 9-foot-thick portion. The slab is keyed into rock in the central portion by the 8-foot-thick walls of the reactor cavity extending a total of 26 feet into rock. A 3-foot-thick concrete subpour underlies the structural concrete and caps the top of the irregular rock surface. This serves to preserve the rock in its native state of being under pressure, thus preventing deterioration of the rock surface. The base rock consists of interbedded shales and limestones. See Section 2.5.1 for additional discussion of the rock base and foundation treatment.

The interior concrete structures described in Section 3.8.3 constitute the support system for all equipment in the containment structures. All major equipment supported on the foundation (steam generators and reactor coolant pumps) is anchored through the steel liner plate into the 9-foot-thick concrete base slab, thus preventing the liner from becoming a stress carrying member.

The base liner plate is anchored to the foundation through the use of embedded 'Tee' shaped steel sections which have provisions for leveling before concrete is placed. The embedded anchors are used as screeds during the placement of the concrete to ensure that a flat surface is obtained coincident with the top of the anchors. All welded joints in the base liner plate are made at anchors. All joints in the base liner plate are equipped with leak chases to facilitate testing for leak tightness.

As defined as part of the primary containment, the concrete structural slab and its liner are subject to the in-service inspection requirements of ASME Section XI, Subsection IWE, “Requirements for Class MC and Metallic Liners of Class CC Components,” and Subsection IWL, “Requirements for Class CC Concrete Components.” However, the concrete structural slab is inaccessible for examination as it is covered by the liner as described in Section 3.8.2.1.1 and the containment floor structural fill slab as described in Sections 3.8.3.2 and 3.8.3.3 and is exempt from examination in accordance with IWL-1220. However, the concrete structural slab is subject to the repair requirements of Article IWL of ASME Section XI. The in-service inspection requirements for Class MC and metallic liners of Class CC components are contained in Section 3.8.2.7.9.

3.8.5.1.2 Foundations of Other Category I Structures

Auxiliary-Control Building and Associate Structure

All of the Auxiliary-Control Building, except the waste packaging structure, and the condensate demineralizer waste evaporator structure portion is supported by a

reinforced concrete slab placed on a 4-inch-minimum-thick concrete subpour which caps the top of the irregular rock surface.

The Auxiliary Building portion of the base slab is 7 feet thick while the control bay portion is 5 feet thick. The entire base slab is located on three different levels with continuity between these levels being provided through thick walls. The thicknesses of the slab were selected primarily to provide sufficient rigidity to minimize differential vertical movements of columns and walls and secondarily to reduce shearing stresses in the slab itself. Due to the thickness of the slab, anchorage into rock was not required to resist hydrostatic up-lift pressures from maximum flood conditions.

The waste packaging structure is separated from the rest of the Auxiliary Building by 2 inches of fiberglass expansion joint material. The 45-inch-thick base slab at grade Elevation 728 is supported below Elevation 725.25 by crushed stone backfill placed in 4-inch layers and compacted to a minimum of 70% relative density.

The base slab of the condensate demineralizer waste evaporator structure is 2-feet, 9-inches thick, except for the access tunnel part of the building which is 2-feet, 3-inches thick. The structure is supported on H-bearing piles. The access tunnel is separated from the rest of the Auxiliary Building by two inches of fiberglass expansion joint material.

Intake Pumping Station

The intake structure is supported by a reinforced concrete slab placed on a 4-inch minimum thick concrete subpour which caps the top of the irregular rock surface. The base slab is 4 feet thick with a 6-foot-wide by 10-foot deep key located at the back of the structure. This key extends the full width of the structure. The base slab extends 10 feet past the back wall and has two areas of 26 feet by 29 feet on each side that extend beyond the walls.

The concrete retaining walls at the intake structure are designed to protect the forebay of the intake against earth slides during an earthquake. The base slabs of these cantilevered walls are keyed into rock. The walls are separated from the structure with expansion joint material.

North Steam Valve Room

The north steam valve room is supported by a grillage of reinforced concrete foundation walls to base rock. These walls span vertically from base rock at Elevation 683.0 to the bottom of the valve room base slab at Elevation 722.0. There are four 4-foot thick walls running in a north-south direction and these walls are tied together by a singular 4-foot thick wall running in an east-west direction. Three closed cells are formed by these walls in combination with the Reactor Building wall. These closed cells are backfilled with a non-compacted crushed stone. The valve room foundation walls are separated from the Reactor Building foundation and wall by a 2-inch fiberglass expansion joint material.

Diesel Generator Building

The base slab of the Diesel Generator Building is discussed in Section 3.8.5.5.2. Based on soils laboratory tests, it could not be assured that the existing material between the top of firm gravel at Elevation 713 and base slab was capable of safely supporting the structure. Therefore, this material was removed and replaced with crushed stone fill placed in 4-inch layers and compacted to a minimum of 70% relative density (see Section 2.5.4.5.2.). A slope stability analysis was performed in order to assure stability of the slope below the building.

Refueling Water Storage Tank

The refueling water storage tank foundation is a solid, circular reinforced concrete structure placed on engineered granular fill over firm natural granular soil. The foundation is constructed with shear keys to prevent sliding displacement and with retaining walls to contain a reservoir of borated water after a postulated rupture of the storage tank. The foundation is protected from missiles by a concrete apron.

Discharge Overflow Structure

See Section 3.8.4.1.7 for a description of the discharge overflow structure foundation.

Class 1E Electrical System Manholes and Duct Banks

The manholes and a portion of the duct banks are supported on in-situ soil. The duct banks at the intake pumping station are supported on in-situ soil, piles, and a bracket on the pumping station wall, see Section 3.8.4.1.4 for additional information.

ERCW Standpipe Structures

See Section 3.8.4.1.7 for the standpipe structures.

ERCW Pipe Supporting Slabs and Beams

See Section 3.8.4.1.7 for a description of the beams and slab.

ERCW Valve Covers

See Section 3.8.4.1.7 for a description of these structures.

Additional Diesel Generator Building

The base slab of the additional Diesel Generator Building is discussed in Section 3.8.4.4.8. Similar to the Diesel Generator Building, it could not be assured that the existing soil between the top of firm gravel at Elevation 713.0 and the bottom of the base slab at Elevation 730.0 could safely support this structure. Therefore, the building was supported on end bearing steel H-Piles driven to refusal in sound rock or other suitable material. For additional information on this structure, see Section 3.8.4.1.8.

3.8.5.2 Applicable Codes, Standards, and Specifications

See Sections 3.8.1.2, 3.8.3.2 and 3.8.4.2.

3.8.5.3 Loads and Loading Combinations

The loads and loading combinations are described in Sections 3.8.1.3, 3.8.3.3, and 3.8.4.3. For loads and loading combinations on the Additional Diesel Generator Building, see Table 3.8.4-22.

3.8.5.4 Design and Analysis Procedure

3.8.5.4.1 Primary Containment Foundation

The foundation was analyzed as a slab on a rigid foundation. The slab was analyzed using computer code Gendek 3 Finite Element Analysis of Stiffened Plates.

Maximum tangential and radial moments were obtained using the finite element analysis of the various load combinations. Shear stresses were obtained by conventional analysis for the containment vessel anchorage and major equipment loadings.

3.8.5.4.2 Auxiliary-Control Building

The reinforced concrete base slab of the Auxiliary-Control Building was designed in compliance with the ACI Building Code 318-63. It was analyzed by the ICES STRUDL-II finite element method as a slab on an elastic foundation. In the ICES STRUDL- II program the foundation material was modeled by assigning a vertical spring to each node of the grid system which was used to represent the base slab. The base slab was divided into elements with wall stiffnesses being recognized by introducing flexural rigidity along the wall and torsional rigidity being recognized by including a rotational spring. Superposition of the various loading conditions were used to obtain maximum stresses. Manual calculations gave results for the bending moments which checked reasonably close with those obtained from the ICES STRUDL-II analysis. A standard frame analysis was also performed in order to determine the shearing forces in the slab.

Shear walls fixed to the base slab transmit lateral force to the slab; the base slab itself is keyed and anchored into foundation rock to transmit shear from the structure into the rock.

The 45-inch-thick slab of the waste packaging area was designed for a uniform distribution of base pressure to span as a flat plate between the load bearing walls. Walls were thicker than necessary for structural purposes because of shielding requirements.

The base slab of the condensate demineralizer waste evaporator building portion was designed as a pile supported foundation. Batter piles were used around the perimeter of the structure to transmit lateral loads from the structure to the foundation media.

3.8.5.4.3 Intake Pumping Station

The design of the base slab was controlled for the most part by uplift considerations under assumed unwatered conditions with one bay dry and full uplift over 100% of the

area between the slab and the base rock. The backfilled portion of the base slab was controlled by the load from the saturated fill.

3.8.5.4.4 Soil-Supported Structures

A uniform or linear distribution of base pressure was assumed in the design of all soil-supported structures and all base slabs were essentially designed as flat plates.

3.8.5.4.5 Pile Supported Structures

Pile supported structures were designed using conventional frame analysis or through the use of ICES STRUDL-II finite element computer program.

3.8.5.5 Structural Acceptance Criteria

3.8.5.5.1 Primary Containment Foundation

The base slab design contained the following conservative features:

(1) No allowance was made for the additional spread of reactions under the walls or the additional section modulus due to the 3-foot structural fill over the base slab.

(2) In the outer area of the slab, where the additional depth is in excess of the 2-foot, 8-inch recess in the upper surface, no allowance has been made for the additional thickness which increases the stiffness of the slab and thus lowers the stresses.

3.8.5.5.2 Foundations of Other Category I Structures

Auxiliary-Control Building

The base slab as designed has its maximum flexural stresses and shearing stresses within the allowable working stress design limits of Table 3.8.4-1 for all loading combinations. Design Case I (dead load plus live load), which generally controlled the design, was investigated by the ICES STRUDL-II program for several loading conditions created by the three different levels of the slab and by the early conditions were superimposed in various combinations to ensure that the slab was designed for the maximum possible stresses.

The maximum calculated compression of the base slab was approximately 12 ksf. The maximum allowable compression on rock is 26 ksf (180 psi). In probable maximum flood conditions, with the dead load of the structure alone assumed to resist the buoyant force, the factor of safety against flotation is 1.53.

Intake Pumping Station

The base slab of the intake pumping station serves as a water barrier under maintenance conditions with one bay unwatered. It also adds to the stability of the structure. Backfill on the extended areas of the slab add weight to the structure and the key provides resistance to sliding. The maximum calculated compression on the

base slab was approximately 12 ksf. The maximum allowable compression on rock is 26 ksf (180 psi).

North Steam Valve Room

The valve room foundation walls were designed to resist the maximum overturning effect on the building. This effect was due to pressure as the result of the rupture of a main steam pipe, its associated jet impingement load, and the Safe Shutdown Earthquake. This resistance to overturning was obtained by converting the maximum overturning moment on the structure into a resisting active soil pressure on the foundation walls. For overturning in the east-west direction, four of the foundation walls were considered effective. For overturning in the north-south direction, the singular cross-wall was considered to be resisting the overturning. Using this pressure as a load on the walls, they were modeled as plate structures utilizing the STRUDL-II Finite Element computer program. The walls were considered to span between bedrock, the bottom of the valve room base slab and other foundation walls framing into them.

Waste Packaging Structure

This structure is situated on well-compacted crushed stone backfill above rock and was designed for a normal allowable uniform bearing pressure of 6.5 ksf and a maximum allowable pressure with 70% or more of the base in compression of 10 ksf under maximum overturning forces. Actual calculated bearing pressures were 1.4 ksf for uniform loading and 6.7 ksf with 72% of the base in compression for maximum overturning forces.

Diesel Generator Building

The structure is situated as described in Section 3.8.5.1.2. The base slab of the Diesel Generator Building is 9 feet 9 inches thick founded on crushed stone backfill and located above the probable maximum flood Elevation. The structure was designed for a normal allowable uniform bearing pressure of 6.5 ksf and a maximum allowable pressure of 11.5 ksf under maximum overturning forces. Actual calculated bearing pressures for the Diesel Generator Building were 2.0 ksf for uniform loading and 4.9 ksf for maximum overturning forces with 100% of the base in compression.

3.8.5.6 Materials, Quality Control, and Special Construction Techniques

General

See Section 3.8.1.6.

3.8.5.6.1 Materials

Concrete and Reinforcing Steel

See Section 3.8.1.6.1

Backfill Materials

Backfill material was taken only from areas designated by the soils investigation program (see Section 2.5.4.5.2) as suitable for backfill material.

3.8.5.6.2 Quality Control

Concrete and Reinforcing Steel

Concrete production and testing were as in Section 3.8.1.6.2, except some concrete used to protect rock surfaces was purchased as ready mix in conformance with ASTM C94-69.

The protective concrete for rock surfaces was specified as 2,000 psi at 90 days age. It was in conformance to specifications.

The Shield Building base slab and the north steam valve rooms foundation walls used concrete specified as 5,000 psi at 90 days.

Some concrete did not meet specification requirements. This was evaluated and documented in the Report CEB-86-19C "Concrete Quality Evaluation". Results have been documented in affected calculation packages and drawings.

Testing of reinforcing steel was as in Section 3.8.1.6.2.

Base Rock

The base area of all rock-supported structures was inspected by the principal civil design engineer in conjunction with an experienced TVA geologist during final cleanup of rock surfaces to determine its suitability as a foundation.

Backfill

Quality control requirements for backfill material were as specified in Section 2.5.4.5.

3.8.5.6.3 Special Construction Techniques

No special construction techniques were used.

REFERENCES

None

THIS PAGE INTENTIONALLY BLANK

3.8.6 Category I(L) Cranes

3.8.6.1 Polar Cranes

3.8.6.1.1 Description

See Figures 3.8.6-1 through 3.8.6-6.

There are two polar cranes, one in each of the Reactor Buildings. Each crane is a single two-part trolley, overhead, electric traveling type; operating on an 86-foot 0-inch-diameter rail at the top of the crane wall and above the reactor. Each crane has a main hoist capacity of 175 tons and an auxiliary hoist capacity of 35 tons.

The main and auxiliary hoist motions are driven by ac motors with Variable Frequency Drives. The bridge and trolley are driven by ac motors with Variable Frequency Drives.

Structural portions of the crane bridges consist of welded boxtype girders and welded, haunched, box-type end ties. Structural portions of the trolleys consist of welded box-type trucks and welded cross beams.

Control of each crane is from a cab located below the bridge walkway at one end of a girder.

3.8.6.1.2 Applicable Codes, Standards, and Specifications

The following codes, standards, and specifications were used in the design of the cranes:

National Electric Code, 1971 edition.

National Electrical Manufacturers Association, Motor and Generator Standards, Standard MG-1, 1970 edition.

Crane Manufacturers Association of American, Inc., Specification #70, 1970 edition.

Federal Specification RR-W-410C

American Society for Testing and Materials, 'Material Standards,' 1974 edition.

American Welding Society, D1.1-72 with 1973 Revisions, Structural Welding Code.

> Section 1.23, Part 1, 'Specification for the Design, Fabrication, and Erection of Structural Steel for Buildings,' Manual of Steel Construction, Part 5, American Institute for Steel Construction, 7th edition, 1970.

American Gear Manufacturers Association Standards for Spur, Helical, Herringbone, and Beval Gears.

Where date of edition, copyright, or addendum is specified, earlier versions of the listed documents were not used. In some instances, later revisions of the listed documents were used where design safety was not compromised.

The cranes meet applicable requirements of the listed codes, standards, and specifications.

3.8.6.1.3 Loads, Loading Combinations, and Allowable Stresses

Loads, loading combinations, and allowable stresses are shown in Table 3.8.6-1.

3.8.6.1.4 Design and Analysis Procedure

The bridge girders and end ties for each crane were designed as simple beams in the vertical plane and as a continuous frame in the horizontal plane. Stresses in the girders and end ties were computed with the trolley positioned to produce maximum stresses. Seismic restraints are located on the bottom of each girder and these restraints are designed to withstand seismically applied loads to ensure the crane will not fall during an earthquake.

Trolley positions used were the maximum end position, third point, and the point near the center which produces maximum bending moments.

Trolley members were designed as simple beams. Design of the bridge girders and end ties was by TVA. Mechanical parts and structural members except the bridge girders and end ties were designed by the contractor. Calculations and designs made by the contractor were reviewed by TVA design engineers.

In designing for earthquake conditions, forces due to accelerations at the crane bridge rails were used as static loads for determining component and member sizes. After establishing component and member sizes, a dynamic analysis, using appropriate response spectra, was made of the total crane to determine that allowable stresses had not been exceeded.

Earthquake accelerations at the bridge rails were determined by dynamic analysis of the structures supporting the crane rails.

The polar crane was also evaluated for seismic loads based on the Set B seismic response spectra using 2% damping for OBE and 4% damping for SSE. The polar crane was initially evaluated for seismic loads based upon Set A seismic response spectra.

3.8.6.1.5 Structural Acceptance Criteria

Allowable stresses for all load combinations used for the various crane parts are given in Table 3.8.6-1. For normal load conditions, the allowable stresses provide safety factors of 2 to 1 on yield for structural parts and 5 to 1 on ultimate for mechanical parts, except for wire ropes which have a minimum safety factor of 5 to 1 on ultimate. For limiting conditions, such as an SSE earthquake or stall, stresses do not exceed .9 yield.

3.8.6.1.6 Materials, Quality Controls, and Special Construction Techniques

A36 steel was used for the major structural portions of the crane. Design by TVA and erection by TVA were in accordance with TVA's quality assurance program. Design and fabrication by the contractor were in accordance with the contractor's quality assurance program which was reviewed and approved by TVA's design engineers. The contractor's quality assurance program covers the criteria in Appendix B of 10 CFR 50. Fabrication procedures such as welding, stress relieving, and nondestructive testing were included in appendices to the contractor's quality assurance program.

ASTM standards were used for all material specifications and certified mill test reports were provided by the contractor for materials used for all load-carrying members.

This crane is covered by TVA's Augmented Quality Assurance Program for Seismic Category I(L) Structures.

3.8.6.1.7 Testing and In-service Surveillance Requirements

Refer to Section 14.2.7, Paragraph 4.A.1.h for Initial Testing.

After the initial test, periodic visual inspections of each crane are to be made. Parts inspected during the visual inspection are to include all bolted parts, couplings, brakes, hoist ropes, hoist blocks, limit switches, and equalizer systems.

3.8.6.1.8 Safety Features

The cranes were designed to withstand an SSE and to maintain any load up to rated capacity during and after the earthquake period.

The bridges are equipped with double flange wheels, spring-set, electrically-released brakes which set and firmly lock two of the wheels when the bridge drive machinery is not operating or when power is lost for any reason, hold down lugs which run under the rail heads, and seismic restraints located on the bottom of each girder. During an earthquake the crane rail will yield before the crane wheels fail, thus allowing the crane to move until the seismic restraints on each girder contact the crane wall. These restraints hold the crane on the runway. Guide rollers, mounted on each extreme corner truck, travel against the outer surface of the bridge rail to assure bridge truck alignment.

The trolleys are each equipped with double flange wheels, two spring-set, electrically-released brakes which set and firmly lock the driving wheels when the trolley drive machinery is not operating or when power is lost for any reason, and hold down lugs which run under the rail heads. Positive wheel and bumper stops are provided at both ends of the bridge. During an earthquake, the trolley could be displaced, but it will not leave its rails which are firmly attached to the bridge structure.

Safety features provided for each hoist include two independent gearing systems, connected by a cross shaft to prevent windup, two brakes with each of the brakes operating through one of the independent gearing systems, two upper travel limit switches, one lower travel limit switch, and over-speed switches set to trip at 120% of

maximum rated speed. Upon loss of AC power, load is manually lowered by manipulating the holding brakes. In addition, each hoist incorporates a symmetrical cross reeving system designed to hold the load level with either rope. Each hoist is also provided with a hydraulic equalizing system to prevent dropping the load and to limit shock loading in case of a single rope failure. Each hoist is also provided with a load sensing system which provides cessation of hoisting when a load of 100% of the rated capacity is applied. The main hoist is also provided with an audible alarm which activates at 100% of rated capacity, as well as a load display on the control console and a load display board which is visible from the Reactor Building refueling floor (elevation 757.0). Holding brakes for the hoists are the spring-set, electrically released type with provisions for manual release of the brakes. The capacity of each main hoist brake is sufficient to stop a 100% rated load traveling at the maximum rated hoisting speed within a distance of 6 inches.

Safety control features provided for all motions consist of overcurrent protection, undervoltage protection, control actuators which return to the stop position when released, and an emergency-stop pushbutton.

3.8.6.2 Auxiliary Building Crane

3.8.6.2.1 Description

See Figure 3.8.6-7 through 3.8.6-11.

The crane in the Auxiliary Building is a single trolley, overhead, electric traveling type with a span of 77 feet. The crane has a main hoist capacity of 125 tons and an auxiliary hoist capacity of 10 tons.

The main and auxiliary hoists are driven by DC motors with regenerative braking and stepless speed control. DC power is supplied by solid-state thyristor-silicon controlled rectifiers. The bridge and trolley travel motions are AC operated with static-stepless regulated speed control.

Structural portions of the crane bridge consist of welded, box-type girders and welded, haunches, box-type end ties. Structural portions of the trolley consist of welded, box-type trucks and welded cross-beams.

Control of the crane is from a control console in the operator cab which is located at mid-span of the crane beneath the south girder.

The one crane serves the needs of two reactor units. It handles the fuel casks, new fuel shipments to the new fuel storage,shield plugs at the equipment access doors, and any large pieces of equipment going into or out of the Reactor Buildings via the Auxiliary Building.

3.8.6.2.2 Applicable Codes, Standards, and Specifications

The following codes, standards, and specifications were used in the design of the crane:

National Electric Code, 1971 Edition.

NEMA Standard MG1, 1970 Edition.

Crane Manufacturers Association of American, Inc., Specification No. 70, 1970 Edition.

Federal Specification RR-W-410C.

ASTM Material Standards, 1974 Edition.

AWS, D1.1-72 with 1973 Revisions, Structural Welding Code.

Section 1.23, Part I, Specification for the Design, Fabrication, and Erection of Structural Steel for Buildings; AISC Manual of Steel Construction, 7th Edition, 1970.

American Gear Manufacturers Association Standards for Spur, Helical, Herringbone, and Bevel Gears.

Where date of edition, copyright, or addendum is specified, earlier versions of the listed documents were not used. In some instances, later revisions of the listed documents were used where design safety was not compromised.

The cranes meet applicable requirements of the listed codes, standards, and specifications.

3.8.6.2.3 Loads, Loading Combinations, and Allowable Stresses

Loads, loading combinations, and allowable stresses are shown in Table 3.8.6-2.

3.8.6.2.4 Design and Analysis Procedure

The bridge girders and end ties for the crane were designed as simple beams in the vertical plane and as a continuous frame in the horizontal plane. Stresses in the girders and end ties were computed with the trolley positioned to produce maximum stresses. Trolley positions used were the maximum end position,

third point, and the point near the center which produces maximum bending moments. The end tie and girder connections are designed to withstand seismically applied loads to ensure that the crane will not fall during an earthquake.

Trolley members were designed as simple beams. Design of the bridge girders and end ties was by TVA. Mechanical parts and structural members except the bridge girders and end ties were designed by the contractor. Calculations and designs made by the contractor were reviewed by TVA.

In designing for earthquake conditions, forces due to accelerations at the crane rails were used as static loads for determining component and member sizes. After establishing component and member sizes, a dynamic analysis, using appropriate response spectra, was made of the total crane to determine that allowable stresses had not been exceeded.

Earthquake accelerations at the crane rails were determined by dynamic analysis of the supporting structure of the Auxiliary Building.

The Auxiliary Building crane was initially evaluated for seismic loads based upon Set A seismic response spectra.

The Auxiliary Building crane was also evaluated for seismic loads based upon Set B seismic response spectra using 4% damping for SSE.

3.8.6.2.5 Structural Acceptance Criteria

Allowable stresses for all load combinations used for the various crane parts are given in Table 3.8.6-2. For normal load conditions, the allowable stresses provide a safety factor of 2 to 1 on yield for structural parts and 5 to 1 on ultimate for mechanical parts, except for wire ropes which have a minimum safety factor of 5 to 1 on ultimate. For limiting conditions, such as a SSE or stall, stresses do not exceed 0.9 yield.

Since the design stresses for SSE do not exceed 0.9 yield, OBE, which results in lower design loads, does not govern.

3.8.6.2.6 Materials, Quality Controls, and Special Construction Techniques

ASTM A 36 steel was used for the major structural portions of the crane. Design by TVA and erection by TVA were in accordance with the TVA quality assurance program. Design and fabrication by the contractor were in accordance with the contractor's quality assurance program which was reviewed and approved by TVA's design engineers. The contractor quality assurance program covers the criteria in Appendix B of 10 CFR 50. Fabrication procedures such as welding, stress relieving, and nondestructive testing, were included in appendices to the contractor's quality assurance program.

ASTM standards were used for all material specifications and certified mill tests reports were provided by the contractor for materials used for all load-carrying members.

This crane is covered by TVA's Augmented Quality Assurance Program for Seismic Category I(L) Structures.

3.8.6.2.7 Testing and In-service Surveillance Requirements

Upon completion of erection and adjustments on the crane, all crane motions and operating parts were thoroughly tested with crane handling 125% of rated capacity. Tests were made to prove the ability of the crane to handle its rated capacity and smaller loads smoothly at any speed within the specified speed range. Each brake was tested to demonstrate its ability to hold the required load.

After the initial test, periodic visual inspections of the crane are to be made. Parts inspected during the visual inspection are to include all bolted parts, couplings, brakes, hoist ropes, hoist blocks, limit switches, and equalizer systems.

3.8.6.2.8 Safety Features

The crane was designed to withstand an SSE and to maintain any load up to rated capacity during and after the earthquake period.

The bridge is equipped with double flange wheels, hold down lugs which run under the rail heads, one spring-released hydraulically set brake, and one spring-set electrically released brake which sets and firmly locks the wheels when the bridge drive machinery is not operating or when power is lost for any reason. During an earthquake the crane rail will yield before failure of the crane wheels and allow the end ties to contact the adjacent concrete wall, thus restraining the crane and preventing it from falling. Positive wheel and bumper stops are provided at each end of the bridge travel.

The trolley is equipped with double flange wheels, two spring-set, electrically released brakes which set and firmly lock the driving wheels when the trolley drive machinery is not operating or when power is lost for any reason, and hold down lugs which run under the rail heads. Positive wheel and bumper stops are provided at both ends of the bridge. During an earthquake, the trolley could be displaced, but it will not leave the rails which are firmly attached to the bridge structure.

Safety features provided for each hoist include two independent gearing systems, connected by a cross shaft to prevent windup, two brakes with each of the brakes operating through one of the independent gearing systems, two upper traveling limit switches, one lower travel limit switch, over-speed switches set to trip at 120% of maximum rated speed, and emergency dynamic braking for controlled lowering in case of simultaneous failure of ac power source and holding brakes. In addition, the main hoist incorporates a symmetrical cross reeving system designed to hold the load level with either rope and to limit the shock loading in case of a single rope failure, and a hydraulic sheave equalizing system to prevent dropping the load and to limit shock loading in case of a single rope failure. The main hoist is also provided with a load sensing system which provides cessation of hoisting when a load of 100% of the rated capacity is applied. The main hoist is also provided with an audible alarm which activates at 100% of rated capacity, as well as a load display on the control console and a load display board which is visible from the Auxiliary Building refueling floor

(elevation 757.0). The auxiliary hoist has a two-part whip-style reeving so that a single rope failure will not drop the load. Holding brakes for the hoists are the spring-set, electrically released type with provisions for manual release of the brakes. The capacity of each main hoist brake is sufficient to stop at 100% rated load traveling at the maximum rated hoisting speed within a distance of 6 inches.

The interlocks will not be bypassed for heavy loads except the fuel transfer gates and for new fuel handling. All loads in excess of 2,059 lbs, or which would have a kinetic energy greater than that of a spent fuel assembly from its normal handling height, will be transported around the spent fuel pit, rather than over, with the interlocks activated, via the normal paths used for heavy loads.

Safety control features provided for all motions consist of overcurrent protection, undervoltage protection, control actuators which return to the stop position when released, and an emergency-stop pushbutton.

The electrical interlocks and mechanical stops will be administratively bypassed to allow use of the crane for handling the fuel transfer canal gate. The bypass is accomplished by means of a keyed switch, operation of which bypasses all interlocks controlling crane movements and activates a green indicating light located beneath the operator's cab. The indicating light is visible from any point on the operating floor. Control of the bypass key by administrative personnel and the ability of administrative personnel to stop the crane by means of any one of three pushbutton stations ensure that administrative personnel control all bypass operations.

Two pushbutton stations are located on the west wall and one pushbutton station is located on the east wall of the Auxiliary Building about four feet above the elevation 757.0 operating floor. These stations are readily accessible to administrative personnel on the operating floor.

Testing of bypass interlocks is accomplished on a periodic basis in accordance with approved WBNP surveillance instructions. Testing must occur within seven calendar days prior to initial use, and every seven calendar days during continued regular usage. Each limit switch is manually operated to ascertain proper functioning of interlock circuits. To verify that the interlock system is functioning properly, each limit switch is moved to its actuated position, and all affected crane controls operated to ensure that crane movement does not occur.

REFERENCES

None

Table 3.8.6-1 Polar Cranes Loads, Loading Combinations, and Allowable Stresses (Page 1 of 2)

No.	Load Combinations	Allowable Stresses (psi)		
		Tension	Compression(1)	Shear
Bridge Structure				
I	Dead Live Impact Trolley tractive	0.50 Fy	0.48 Fy	0.33 Fy
II	Dead Live Impact Bridge tractive	0.50 Fy	0.48 Fy	0.33 Fy
III	Dead Live Trolley collision	0.62 Fy	0.59 Fy	0.41 Fy
IV	Dead Trolley weight Stall at 275% capacity	0.90 Fy	0.90 Fy	0.50 Fy
V	Dead Live at 100% capacity SSE	0.90 Fy	0.90 Fy	0.50 Fy
No.	Load Combinations	Allowable Stresses (psi)		
		Tension	Compression(1)	Shear
Trolley Structure				
I	Dead Live Impact	0.5 FY	0.48 FY	0.33 FY
II	Dead Stall at 275% capacity	0.9 FY(3) 0.62 FY(2)	0.9 FY 0.59 FY	0.5 FY 0.41 FY
III	Same as case V for bridge			

Mechanical Parts

No.	Load Combinations	Allowable Stresses (psi)	
		Tension and Compression(1)	Shear
Parts Other Than Wheel Axles and Saddle Truck Connecting Pins			
I	Dead	Ult	2 x Ult
	Live	5	15

Table 3.8.6-1 Polar Cranes Loads, Loading Combinations, and Allowable Stresses (Page 2 of 2)

II	Dead Stall at 275% capacity	0.9 FY	0.5 FY
Wheel Axles and Connecting Pins			
I	Dead Live Impact	Ult 5	2 x Ult 15
II	Dead Live Collision	Ult 5	2 x Ult 15
III	Dead Stall at 275% capacity	0.40 FY	0.50 FY
IV	Dead Live at 100% capacity SSE	0.90 FY	0.50 FY

Notes:

(1) The value given for allowable compression stress is the maximum value permitted, when buckling does not control. The critical buckling stress, F_{cr}, shall be used in place of F_Y when buckling controls.

(2) For sheave frames, cross-beams, and their respective connections

(3) For all other members

Table 3.8.6-2 Auxiliary Building Crane Loads, Loading Combinations, And Allowable Stresses (Page 1 of 2)

No.	Load Combinations	Allowable Stresses (psi)		
		Tension	Compression(1)	Shear
Bridge Structure				
I	Dead Live Impact Trolley tractive	0.50 Fy	0.48 Fy	0.33 Fy
II	Dead Live Impact Bridge tractive	0.50 Fy	0.48 Fy	0.33 Fy
III	Dead Live Trolley collision	0.62 Fy	0.59 Fy	0.41 Fy
IV	Dead Live Bridge collision	0.62 Fy	0.59 Fy	0.41 Fy
V	Dead Trolley weight Stall at 275% capacity	0.90 Fy	0.90 Fy	0.50 Fy
VI	Dead Live at 100% capacity SSE	0.90 Fy	0.90 Fy	0.50 Fy
No.	Load Combinations	Allowable Stresses (psi)		
		Tension	Compression(1)	Shear
Trolley Structure				
I	Dead Live Impact	0.5 FY	0.48 FY	0.33 FY
II	Dead Stall at 275% capacity	0.9 FY(3) 0.62 FY(2)	0.9 FY 0.59 FY	0.50 FY 0.41 FY
III	Same as case VI for bridge			

Table 3.8.6-2 Auxiliary Building Crane Loads, Loading Combinations, And Allowable Stresses (Page 2 of 2)

Mechanical Parts			
No.	Load Combinations	Allowable Stresses (psi)	
		Tension and Compression(1)	Shear
Parts Other Than Wheel Axles and Saddle Truck Connecting Pins			
I	Dead Live	Ult 5	2 x Ult 15
II	Dead Stall at 275% capacity	0.9 FY	0.50 FY
Wheel Axles and Connecting Pins			
I	Dead Live Impact	Ult 5	2 x Ult 15
II	Dead Live Collision	Ult 5	2 x Ult 15
III	Dead Stall at 275% capacity	0.9 FY	0.5 FY
IV	Dead Live at 100% capacity SSE	0.9 F_Y	0.50 F_Y

Notes:

(1) The value given for allowable compression stress is the maximum value permitted, when buckling does not control. The critical buckling stress, F_{cr}, shall be used in place of F_Y when buckling controls.

(2) For sheave frames, cross-beams, and their respective connections

(3) For all other members

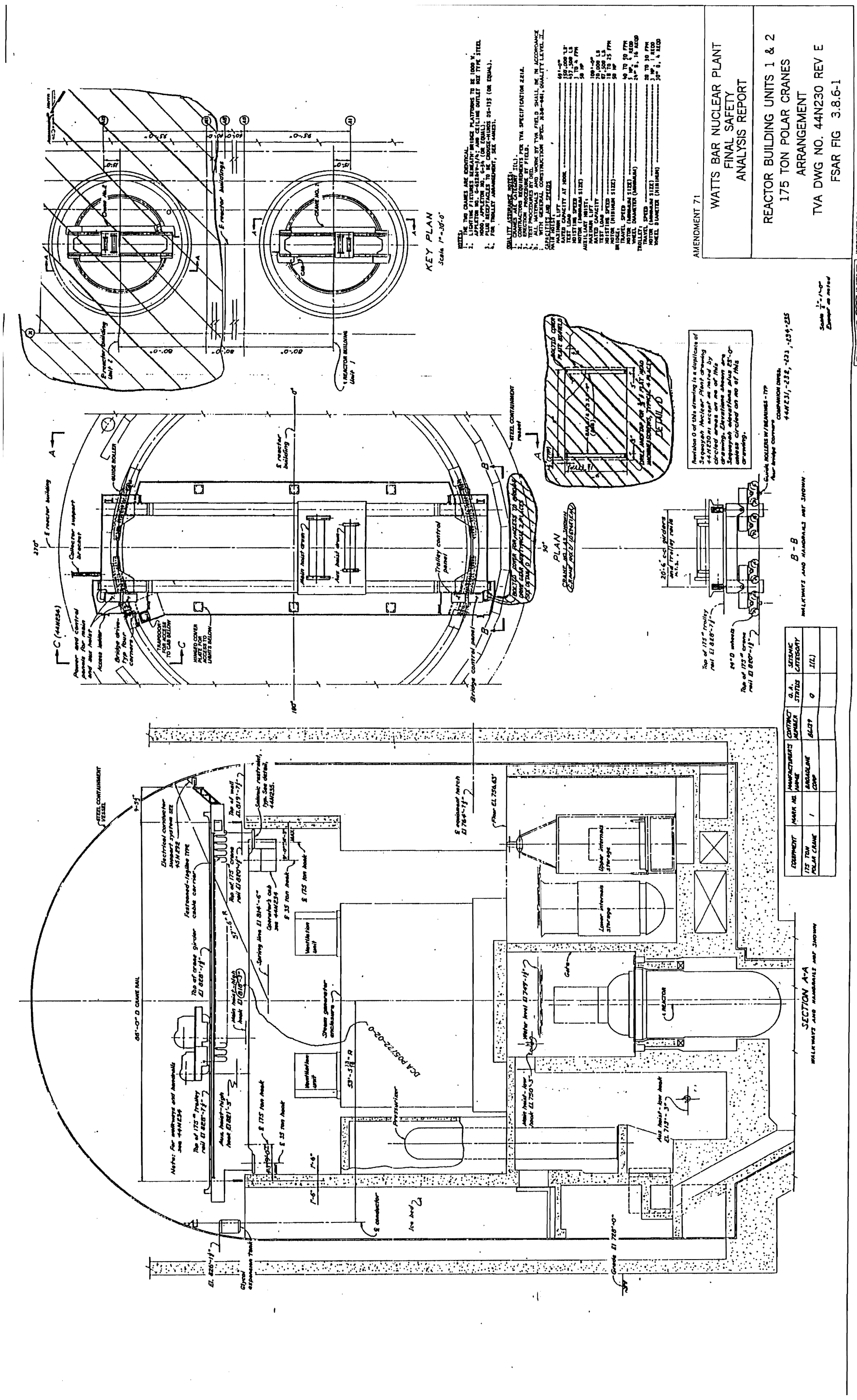

Figure 3.8.6-1 Reactor Building Units 1 & 2 175 Ton Polar Cranes Arrangement

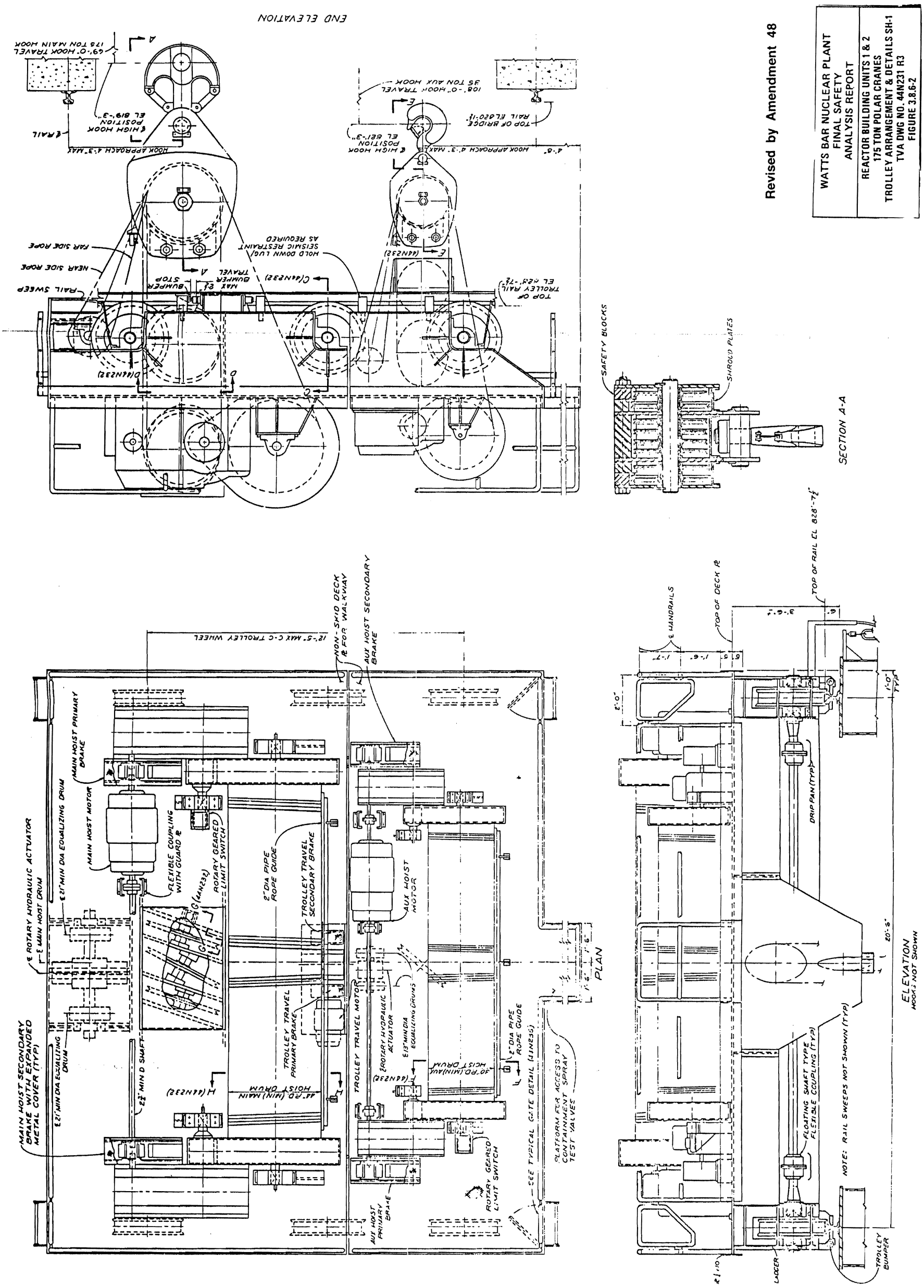

Revised by Amendment 48

WATTS BAR NUCLEAR PLANT
FINAL SAFETY
ANALYSIS REPORT

REACTOR BUILDING UNITS 1 & 2
175 TON POLAR CRANES
TROLLEY ARRANGEMENT & DETAILS SH-1
TVA DWG NO. 44N231 R3
FIGURE 3.8.6-2

Figure 3.8.6-2 Reactor Building Units 1 & 2 175 Ton Polar Cranes Trolley Arrangement and Details (Sheet 1)

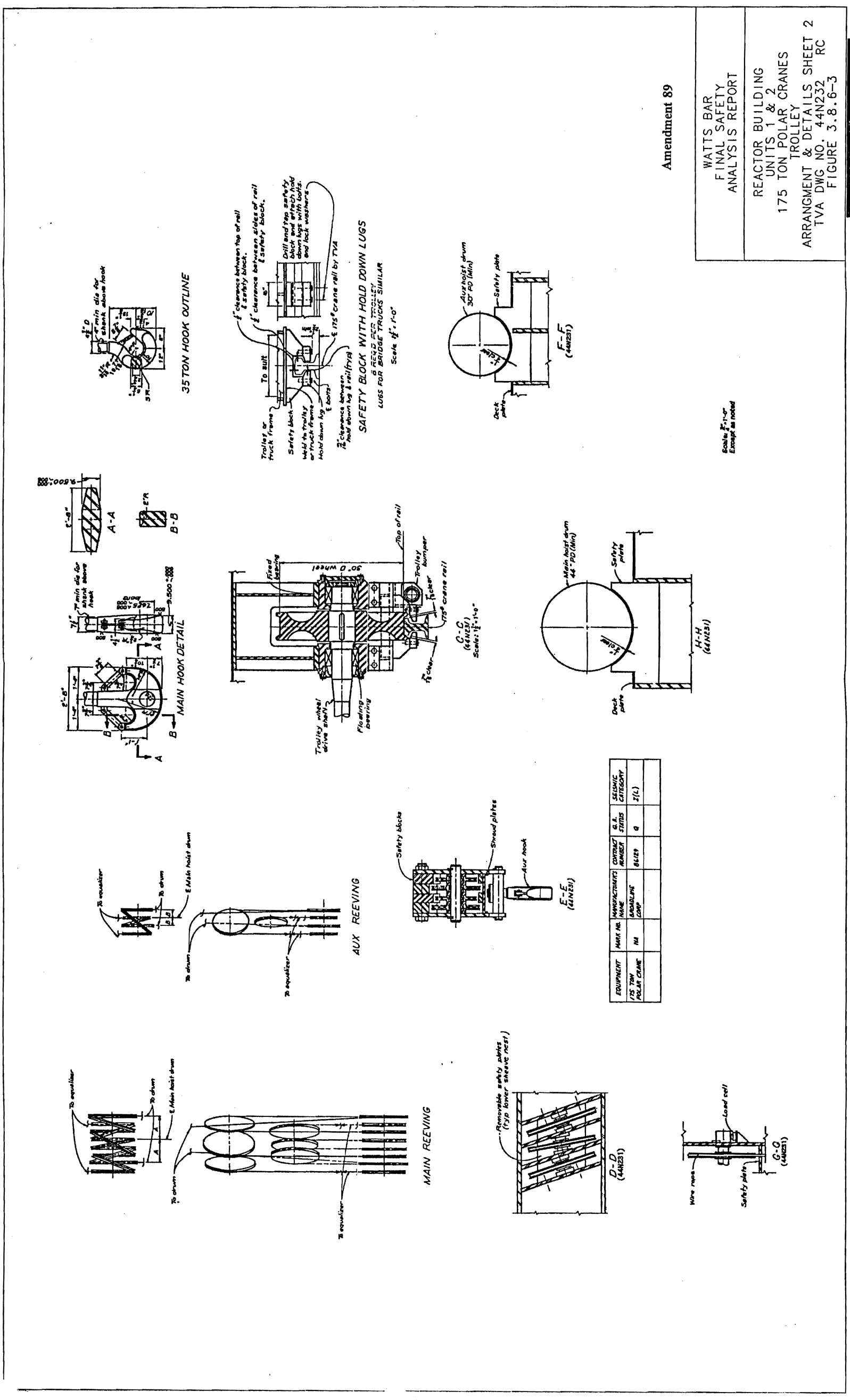

Figure 3.8.6-3 Reactor Building Units 1 & 2 175 Ton Polar Cranes Trolley Arrangement and Details (Sheet 2)

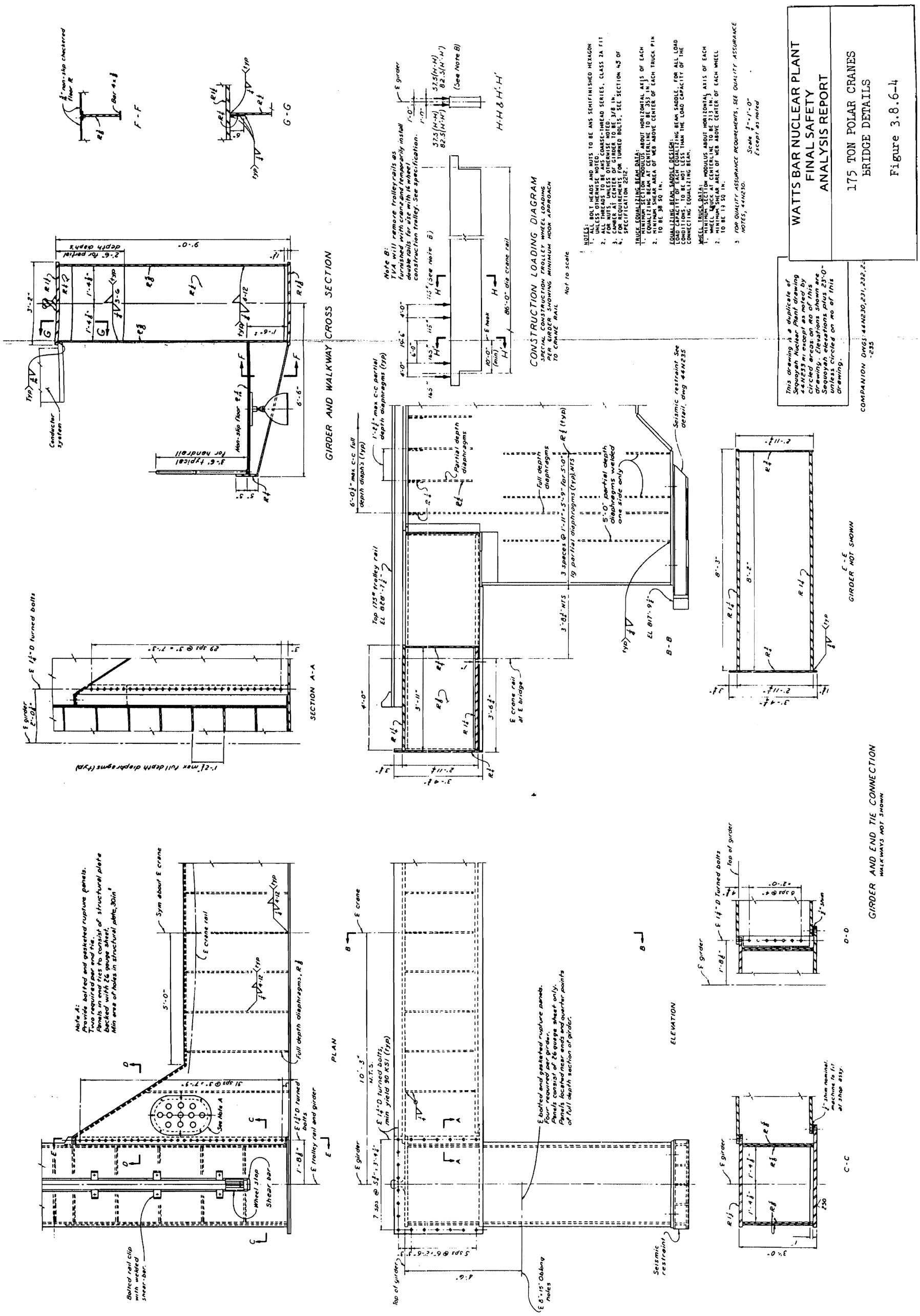

Figure 3.8.6-4 175 Ton Polar Cranes Bridge Details

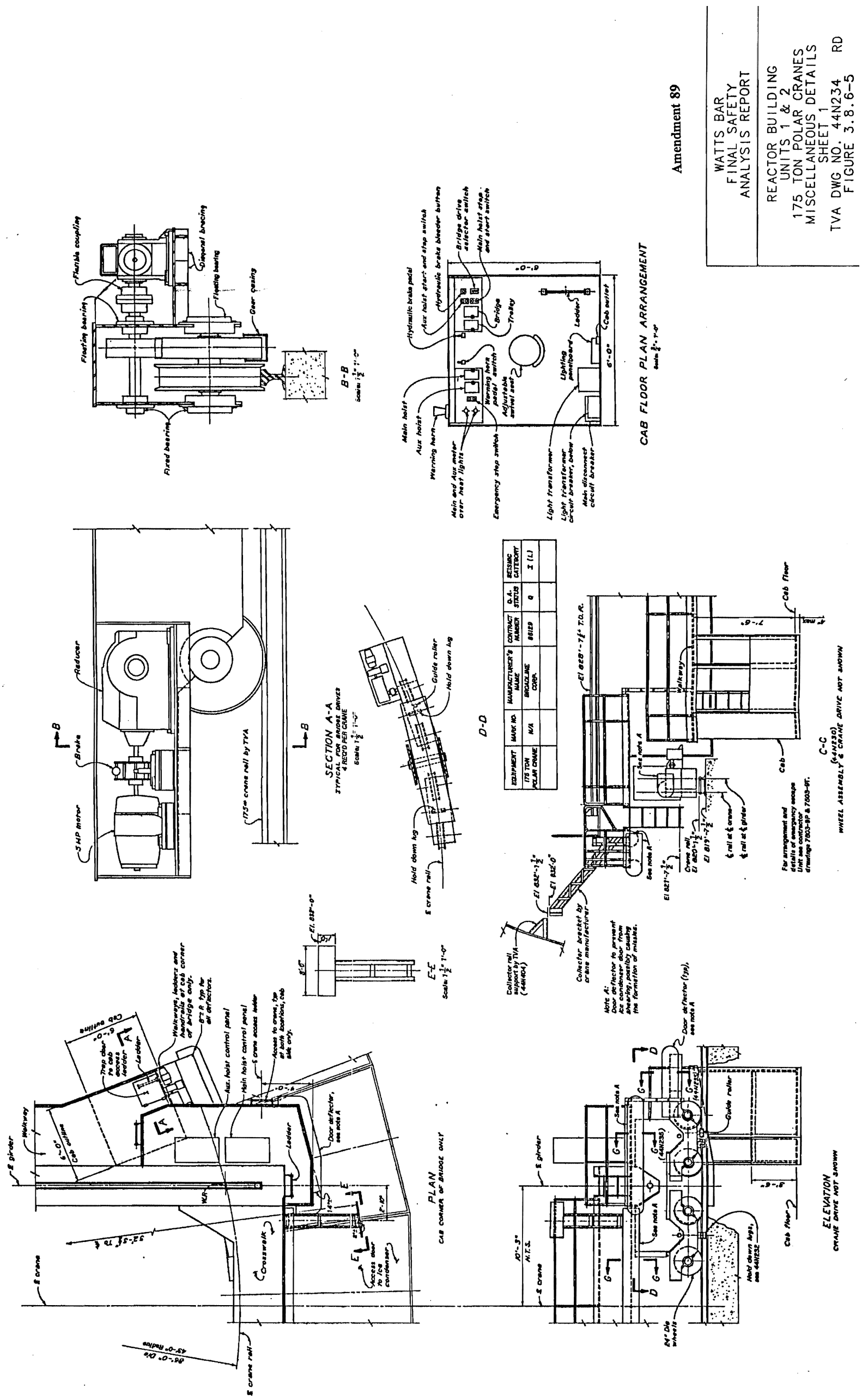

Figure 3.8.6-5 Reactor Building Units 1 & 2 175 Ton Polar Cranes Miscellaneous Details (Sheet 1)

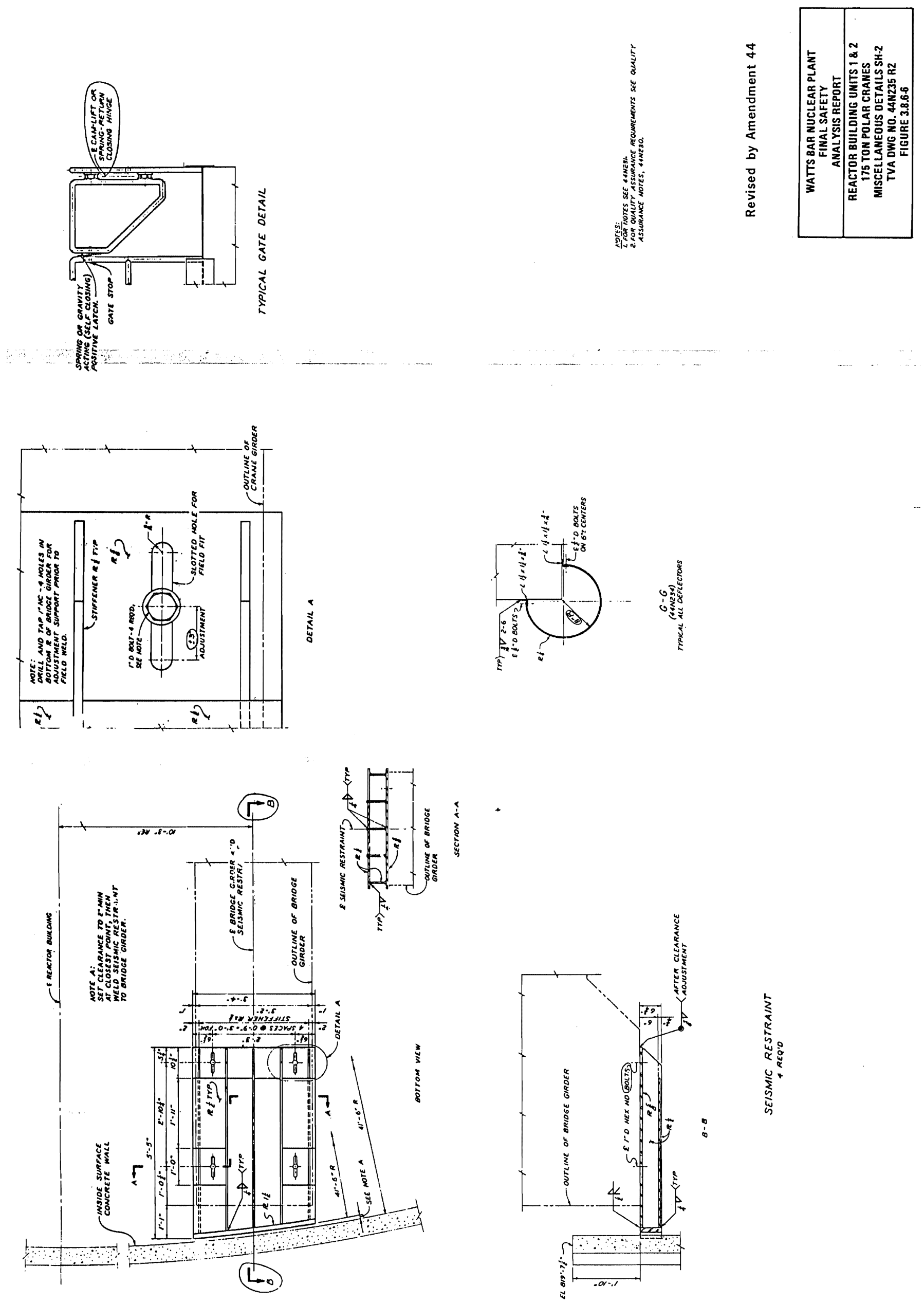

Figure 3.8.6-6 Reactor Building Units 1 & 2 175 Ton Polar Cranes Miscellaneous Details (Sheet 2)

Security-Related Information - Withheld Under 10CFR2.390

Figure 3.8.6-7 Auxiliary Building Units 1 & 2 125 Ton Crane Arrangement

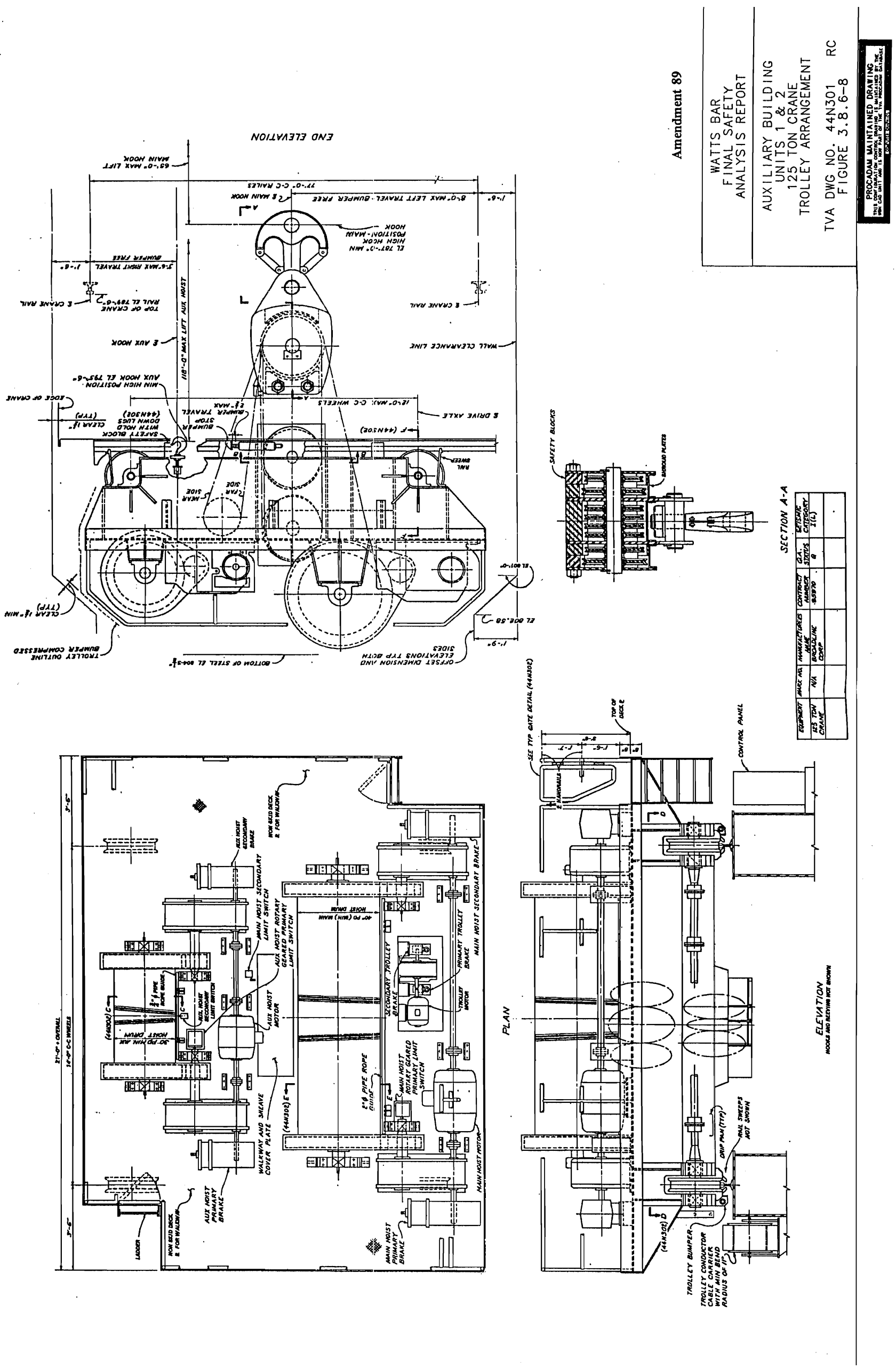

Figure 3.8.6-8 Auxiliary Building Units 1 & 2 125 Ton Crane Trolley Arrangement

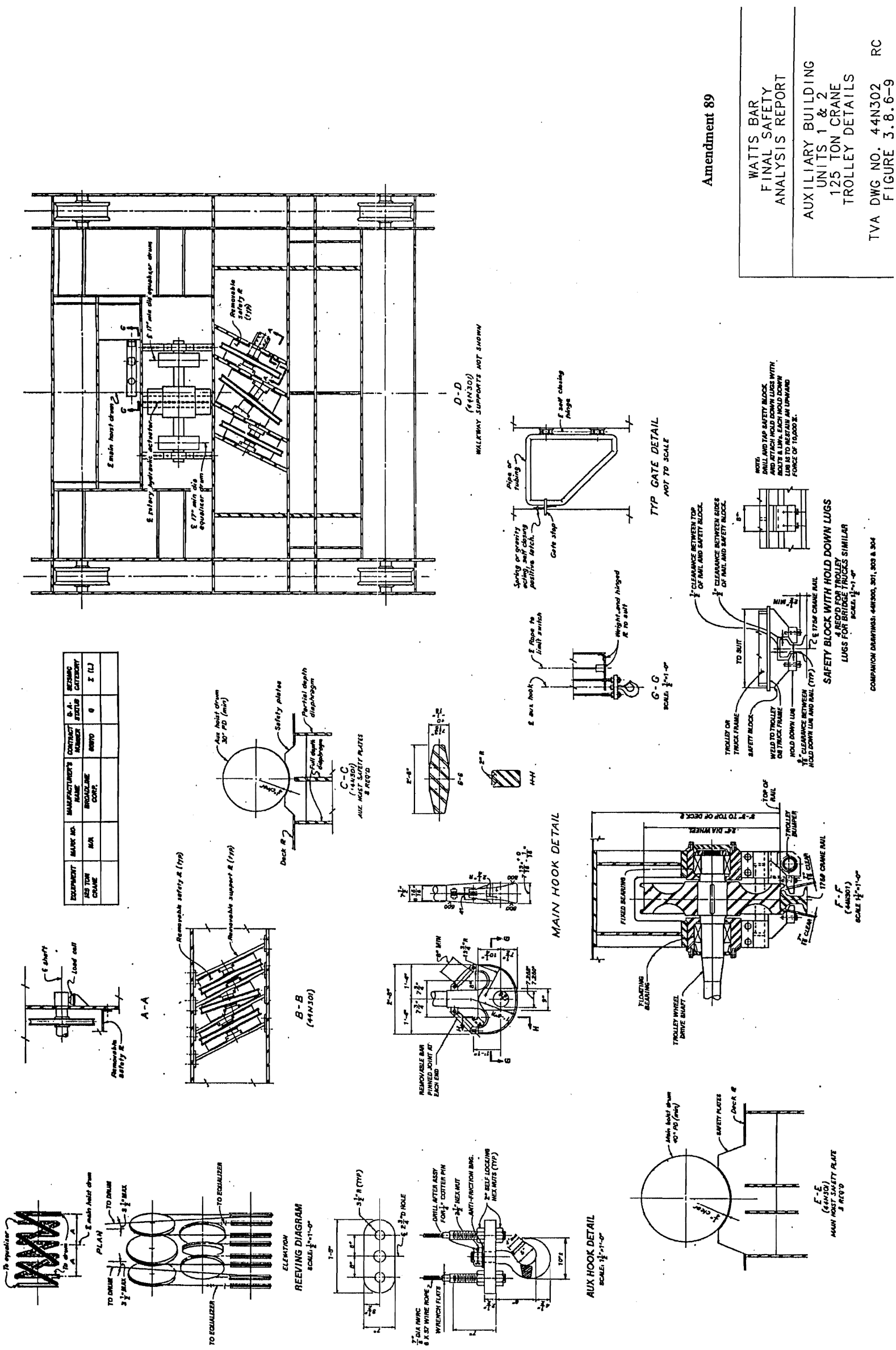

Figure 3.8.6-9 Auxiliary Building Units 1 & 2 125 Ton Crane Trolley Details

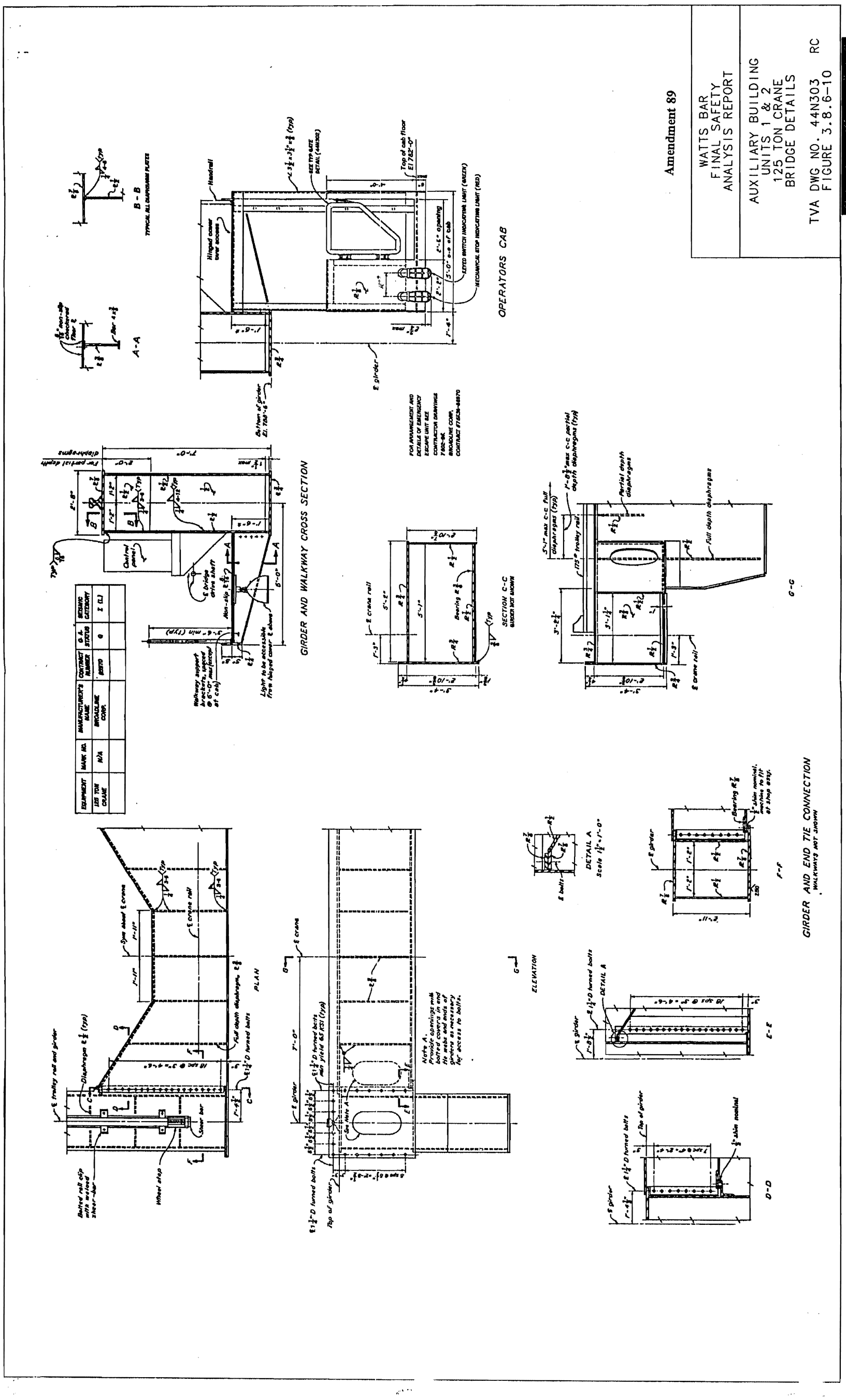

Figure 3.8.6-10 Auxiliary Building Units 1 & 2 125 Ton Crane Bridge Details

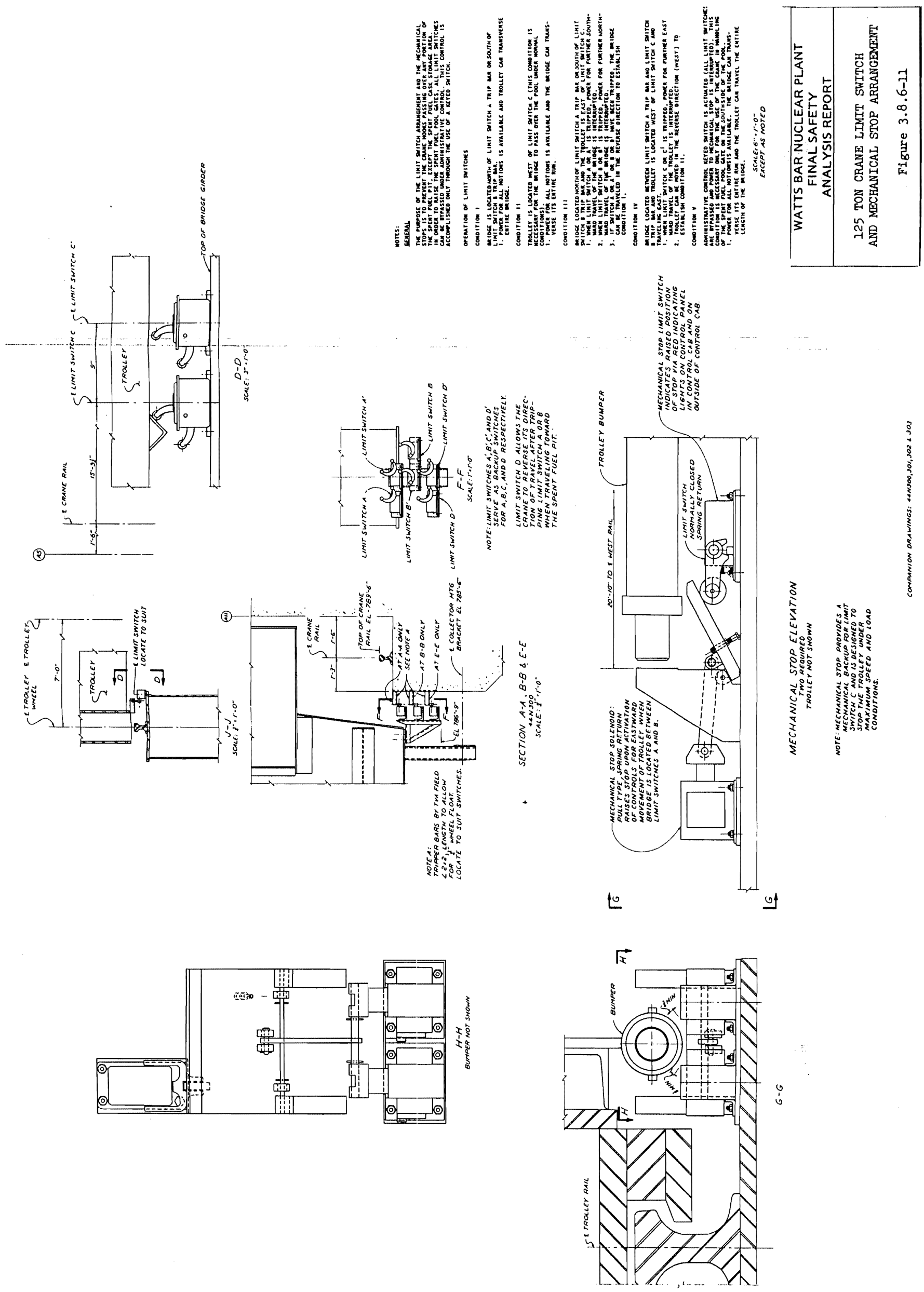

Figure 3.8.6-11 125 Ton Crane Limit Switch and Mechanical Stop Arrangement

THIS PAGE INTENTIONALLY BLANK

3.8A SHELL TEMPERATURE TRANSIENTS

Figure 3.8A-1 presents average shell temperatures adjacent to the three compartments as a function of time after the DBA. The DBA is a double end rupture of the reactor coolant pipe with the reactor decay heat released into the lower compartment as steam. Initially the steam is condensed in the ice compartment. After the ice melts, the steam is condensed in the upper compartment by a water spray.

The lower compartment temperature rises to 250°F, essentially instantaneously, then is reduced to 220°F very shortly after the blowdown is completed. The blowdown is completed before the shell adjacent to the lower compartment reaches 220°F, as illustrated by the smooth curve presented in Figure 3.8A-1.

The upper compartment temperature rises essentially instantaneously due to compression of the noncondensable gases into the upper compartment. The sharp rise at 7,000 seconds simulates the disappearance of the ice from the ice compartment. The shell temperature will rise at a maximum of 0.11 degree per second during the rise from 140°F to 190°F. The subsequent temperature decrease of the shell adjacent to the upper compartment is due to the reduction in decay heat.

The curve labeled shell adjacent to the ice compartment indicates the temperature of the shell adjacent to the ice compartment. The shell is separated from the ice compartment with a thick layer of insulation, hence the rather slow response for the temperature of the shell adjacent to the ice compartment. After the ice is all melted the temperature inside the ice compartment will be the same as the temperature in the lower compartment; however, the shell temperature adjacent to the ice compartment will always be less than the temperature in the ice compartment because of insulation. The temperature of the shell adjacent to the ice compartment will peak at less than 220°F.

The curves in Figure 3.8A-1 are an average shell temperature representative for the bulk of the shell. Some areas near boundaries between compartments and near the base will differ significantly from the bulk. The lower portion of the lower compartment shell will be insulated for the purpose of minimizing the transient effects. Figure 3.8A-2 is a plot of shell temperature versus distance above Elevation 702.78 for various times after a LOCA. In establishing these curves it was assumed that top of the concrete slab is at Elevation 702.78 inches, and that the top of the insulation is at Elevation 707.11, and the top 8 inches of insulation is tapered from 2 inches thick to 1/4-inch thick.

THIS PAGE INTENTIONALLY BLANK

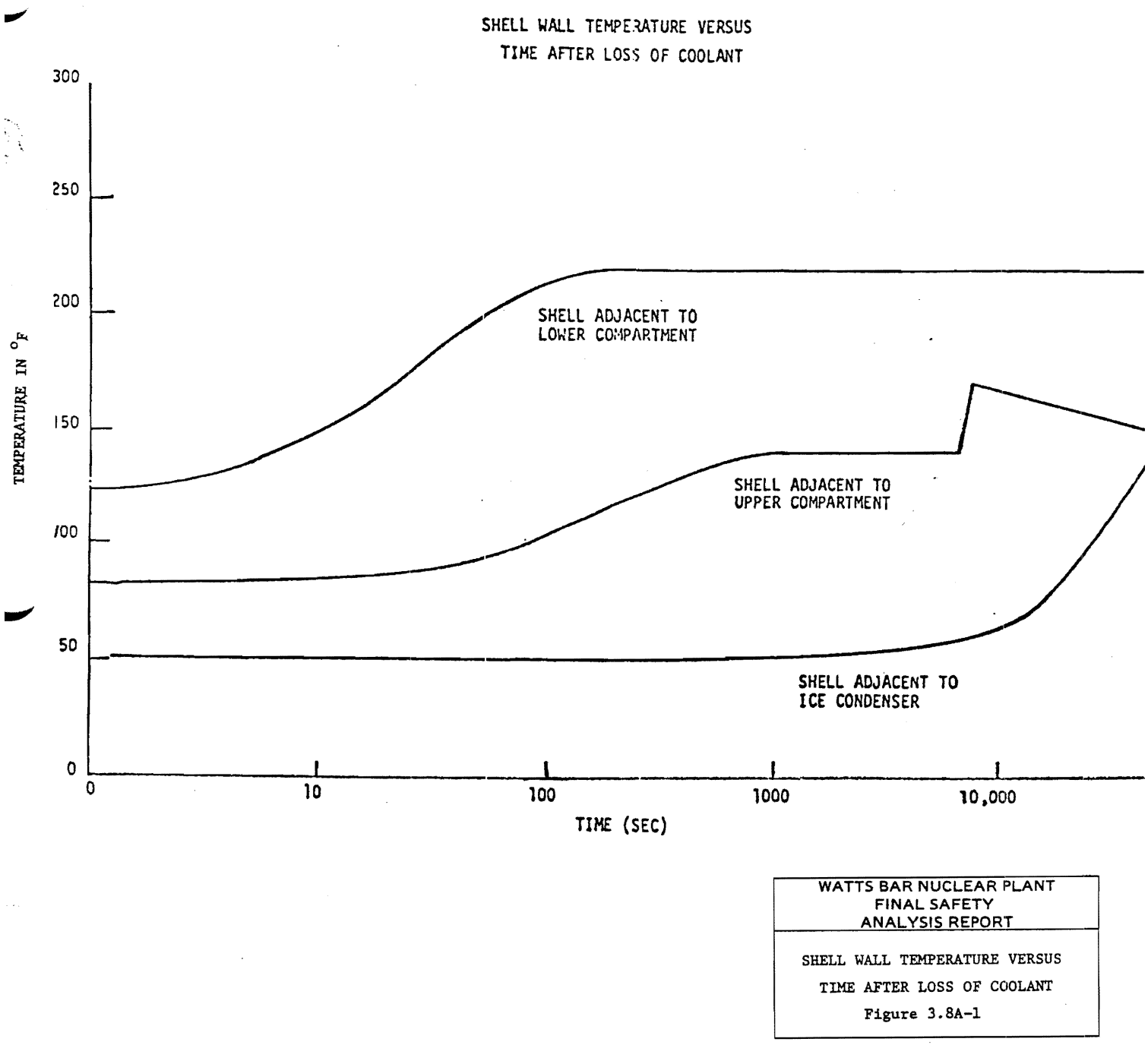

Figure 3.8A-1 Shell Wall Temperature Versus Time After Loss of Coolant

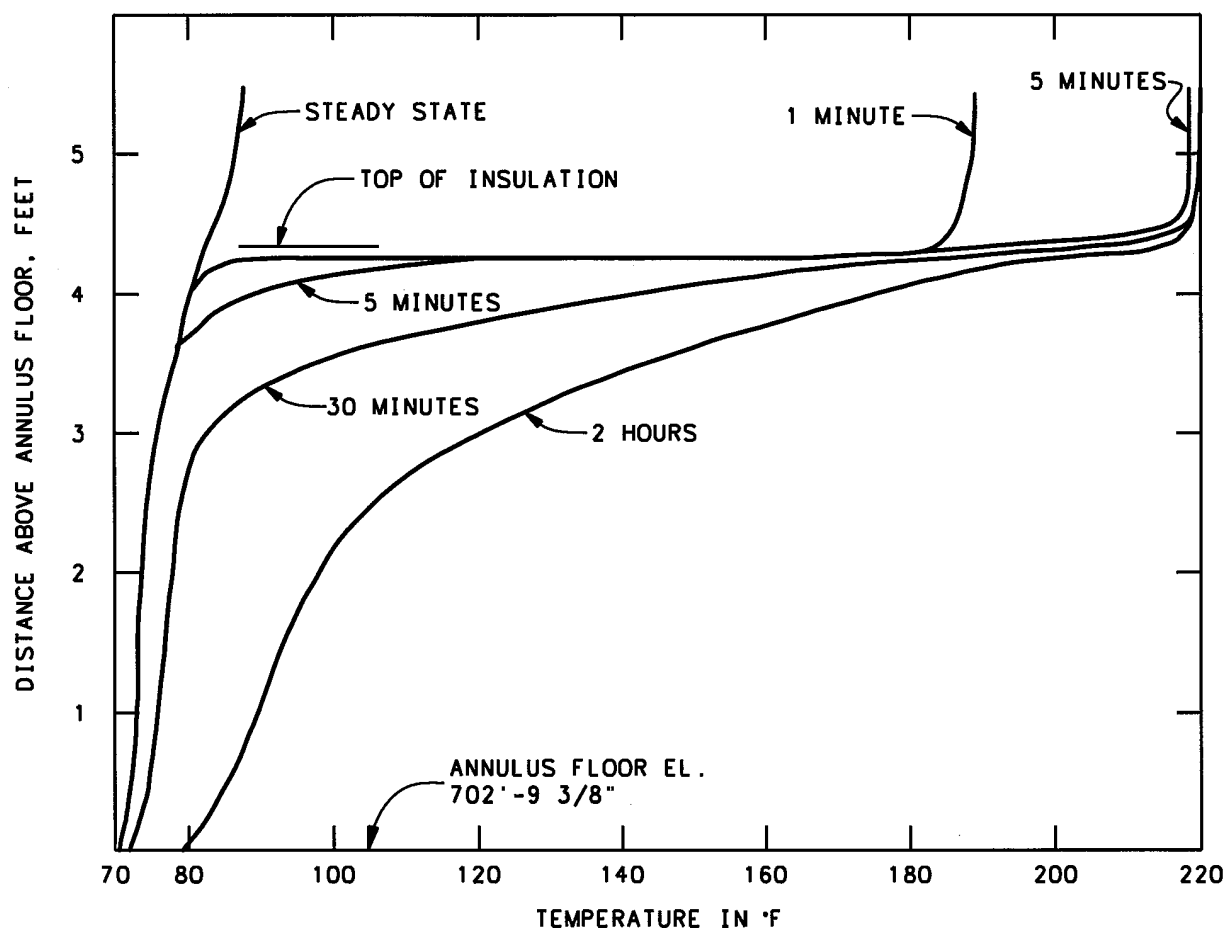

Figure 3.8A-2 Typical Temperature Transient Lower Compartment Wall

3.8B BUCKLING STRESS CRITERIA

3.8B.1 INTRODUCTION

The buckling design criteria in this appendix are applicable to stiffened circular cylindrical and spherical shells. Section 2.0 sets forth the buckling design criteria for shells stiffened with circumferential stiffeners. Because of existing penetrations, interferences, or large attached masses, it may be expedient to further analyze some areas of the vessel as independent panels. Section 3.0 sets forth the criteria for shells stiffened with a combination of circumferential and vertical stiffeners. Section 4.0 deals with the criteria for a spherical dome. The procedures and data presented were adapted primarily from Chapter 3 of the Shell Analysis Manual, by E. H. Baker, A. P. Cappelli, L. Kovalevsky, F. L. Rish, and R. M. Verette, National Aeronautics and Space Administration, Washington, D.C., Contractor Report CR-912, April 1968. The criteria given in this section cover only the range of variables needed for the structural steel containment vessel for which these specifications were prepared.

The buckling criteria are specified in terms of unit stresses and membrane forces in the shell. Stresses caused by multiple loads must be combined according to provisions of Table 3.8B-1 for use in these criteria. The values of the load factors and factors of safety used in the buckling criteria are given in Section 5.0. The method of applying the factors of safety to the criteria is shown in Table 3.8B-2.

3.8B.2 SHELLS STIFFENED WITH CIRCUMFERENTIAL STIFFENERS

3.8B.2.1 Circular Cylindrical Shells Under Axial Compression

The critical buckling stress for a cylinder under axial compression alone is determined by the equation

$$\sigma_{cr}^{(1)} = \frac{C_c E t}{R}$$

for various ranges of cylinder length defined by

$$Z = \frac{L^2}{Rt}\sqrt{1-\mu^2}$$

The constant C_c is determined from Figure 3.8B-1 for the appropriate value of R/t.

The critical buckling stress in a cylinder under axial compression and internal pressure is determined by:

$$\sigma_{cr}^{(1)} = (C_c + \Delta C_c)\frac{Et}{R}$$

The constants C_c and ΔC_c are determined from Figures 3.8B-1 and 3.8B-2, respectively. The constant ΔC_c given in Figure 3.8B-2 depends only upon the internal pressure and R/Et.

3.8B.2.2 Circular Cylindrical Shells in Circumferential Compression

A circular cylindrical shell under a critical external radial or hydrostatic pressure will buckle in circumferential compression. The critical circumferential compressive stress is given by:

$$\sigma_{cr}^{(2)} = \frac{K_p \pi^2 E}{12(1-u^2)}\left(\frac{t}{L}\right)^2$$

for various values of Z given in Section 2.1. Curves for determining the constant K_p for both radial and hydrostatic pressure are given in Figure 3.8B-3.

3.8B.2.3 Circular Cylindrical Shells Under Torsion

The shear buckling stress of the cylinder subject to torsional loads is given by:

$$\sigma_{cr}^{(3)} = C_s \frac{Et}{RZ^{1/4}}$$

The shear buckling stress of the cylinder subject to torsion and internal pressure is determined by

$$\sigma_{cr}^{(3)} = (C_s + \Delta C_s)\frac{Et}{RZ^{1/4}}$$

where constants, C_s and ΔC_s, are determined from Figures 3.8B-4 and 3.8B-5. Values of ΔC_s are given for internal radial pressure alone and internal pressure plus an external load equal to the longitudinal force produced by the internal pressure.

Figure 3.8B-4 is applicable for values of:

$$Z = \frac{L^2}{Rt}\sqrt{1-\mu^2} > 100$$

For cylinders with length constant Z less than 100, the shear buckling stress is determined by:

$$\sigma_{cr}^{(3)} = \frac{K'_s \pi^2 E}{12(1-\mu^2)} \left(\frac{t}{a}\right)^2 \quad a \le b$$

for values of:

$$Z = \frac{a^2}{Rt}\sqrt{1-\mu^2}$$

where a is the effective length and b is the circumference of the cylinder. The coefficient K'_s is given in Figure 3.8B-10.

3.8B.2.4 Circular Cylindrical Shells Under Bending

The critical buckling stress for the cylinder under bending is computed by the equation:

$$\sigma_{cr}^{(4)} = C_b \frac{Et}{R}$$

where the buckling constant, C_b is given by Figure 3.8B-6.

The critical buckling stress for the cylinder under internal pressure and bending is computed by:

$$\sigma_{cr}^{(4)} = (C_b + \Delta C_b)\frac{Et}{R}$$

where C_b and ΔC_b are given by Figures 3.8B-6 and 3.8B-7, respectively.

Figure 3.8B-7 is a function of the internal pressure and the geometry.

3.8B.2.5 Circular Cylindrical Shell Under Combined Loads

The criterion for buckling failure of the cylindrical shell under combined loading is expressed by an interaction equation of stress-ratios of the form:

$$R_1^x + R_2^y + R_3^z < 1$$

Note that

$$R_n = \frac{N_1{}^{(n)}F_1}{\sigma_{cr}{}^{(n)}t} + \frac{N_2{}^{(n)}F_2}{\sigma_{cr}{}^{(n)}t} + \ldots \frac{N_m{}^{(n)}F_m}{\sigma_{cr}{}^{(n)}t} \ldots \frac{N_k{}^{(n)}F_k}{\sigma_{cr}{}^{(n)}t}$$

where N_m is the compressive or shear membrane force and F_m is the appropriate load factor, given in Section 5.0, for individual loading components in any loading combination. The superscript n refers to the particular type of loading. Superscripts n = 1, 2, 3, and 4 represent respectively axial compression, circumferential compression, torsion, and bending loads.

The following interaction equations were used in the design of the cylindrical shell.

(a) Axial Compression and Circumferential Compression

$$\sum_{m=o}^{m=k} \frac{N_m^{(1)} F_m}{\sigma_{cr}^{(1)}\, t} + \sum_{m=o}^{m=k} \frac{N_m^{(2)} F_m}{\sigma_{cr}^{(2)}\, t} < 1$$

(b) Axial Compression and Bending

$$\sum_{m=o}^{m=k} \frac{N_m^{(1)} F_m}{\sigma_{cr}^{(1)}\, t} + \sum_{m=o}^{m=k} \frac{N_m^{(4)} F_m}{\sigma_{cr}^{(4)}\, t} < 1$$

(c) Axial Compression and Torsion

$$\sum_{m=o}^{m=k} \frac{N_m^{(1)} F_m}{\sigma_{cr}^{(1)} t} + \left(\sum_{m=o}^{m=k} \frac{N_m^{(3)} F_m}{\sigma_{cr}^{(3)} t} \right)^2 < 1$$

(d) Axial Compression, Bending, and Torsion

$$\sum_{m=o}^{m=k} \frac{N_m^{(1)} F_m}{\sigma_{cr}^{(1)} t} + \sum_{m=o}^{m=k} \frac{N_m^{(4)} F_m}{\sigma_{cr}^{(4)} t} + \left(\sum_{m=o}^{m=k} \frac{N_m^{(3)} F_m}{\sigma_{cr}^{(3)} t} \right)^2 < 1$$

(e) Axial Compression, Circumferential Compression, and Torsion

$$\sum_{m=o}^{m=k} \frac{N_m^{(1)} F_m}{\sigma_{cr}^{(1)} t} + \sum_{m=o}^{m=k} \frac{N_m^{(2)} F_m}{\sigma_{cr}^{(2)} t} + \left(\sum_{m=o}^{m=k} \frac{N_m^{(3)} F_m}{\sigma_{cr}^{(3)} t} \right)^2 < 1$$

The longitudinal membrane stresses produced by the nonaxisymmetric pressure loads (NASPL) were considered as caused by bending loads in the interaction equations.

3.8B.3 SHELLS STIFFENED WITH A COMBINATION OF CIRCUMFERENTIAL AND VERTICAL STIFFENERS

3.1 The shell was provided with permanent circumferential and vertical stiffeners. The circumferential stiffeners were designed to have a spring stiffness at least great enough to enforce nodes in the vertical stiffeners so as to preclude a general instability mode of buckling failure, thus ensuring that if buckling occurs, it will occur in stiffened panels between the circumferential stiffeners. An acceptable procedure for determining the critical buckling stresses in the vertical stiffeners and stiffened panels is outlined in Section 3.43 Shell Analysis Manual, by E. H. Baker, A. P. Cappelli, L. Kovalevsky, F. L. Rish, and R. M. Verette, National Aeronautics and Space Administration, Washington, D.C., Contractor Report CR-912, April 1968.

3.2 In addition for shells stiffened with a combination of circumferential and vertical stiffeners under combined load, the criterion for buckling failure of the shell plate is expressed by an interaction equation of stress ratios in the form similar to the interaction equations of Section 2.5.

$$R_1^X + R_2^y + R_3^Z < 1$$

The critical buckling stresses for the shell plates between the circumferential and vertical stiffeners were determined by the following equations.

(a) Curved Panel under Axial Compression.

The critical buckling stress for a curved cylindrical panel under axial compression alone is determined by the equation:

$$\sigma_{cr} = \frac{K_c \pi^2 E}{12(1-\mu^2)} \left(\frac{t}{b}\right)^2$$

for various ranges of cylinder length given by:

$$Z = \frac{b^2}{Rt}\sqrt{1-\mu^2}$$

The constant K_c is determined from Figure 3.8B-8.

(b) Curved Panel in Circumferential Compression

The critical buckling stress of a curved cylindrical panel under circumferential compression was determined by Section 2.2.

(c) Curved Panel Under Torsion

The shear buckling stress of a curved cylindrical panel subjected to torsional loads is given by:

$$\sigma_{cr} = \frac{K_s \pi^2 E}{12(1-\mu^2)} \left(\frac{t}{b}\right)^2 \quad a \geq b$$

for values of:

$$Z = \frac{b^2}{Rt}\sqrt{1-\mu^2}$$

The coefficient, K_s, is given in Figure 3.8B-9. For cylindrical panels with length, a, less than the arc length, b, the shear buckling stress is determined by:

$$\sigma_{cr} = \frac{K'_{s'}\pi^2 E}{12(1-\mu^2)}\left(\frac{t}{a}\right)^2 \quad a \le b$$

for values of:

$$z = \frac{a^2}{Rt}\sqrt{1-\mu^2}$$

Curves for determining K'_s, are given in Figure 3.8B-10.

(d) Curved Panels Under Bending

The critical buckling stress for a curved panel in bending was computed using the equation for axial compression given in (a) of this section.

3.3 The critical buckling stress in a stiffened hemispherical shell for the analysis was not treated in the Shell Analysis Manual, and except for external pressure, was determined by the following equation:

$$\sigma_{cr} = 0.125E\frac{t}{R}$$

where:

t = thickness of shell

E = modulus of elasticity

R = radius of shell

3.8B.4 SPHERICAL SHELLS

3.8B.2.1 The critical buckling stress in the spherical dome, except for external pressure, was determined by the following equation:

$$\sigma_{cr} = 0.125\frac{Et}{R}$$

where

t = thickness of shell

E = modulus of elasticity

R = radius of shell

3.8B.2.2 Spherical Shell Under Combined Loads

The criterion for buckling failure of the dome is expressed by an interaction equation of the stress ratios in the form:

$$R_1^X + R_2^y + R_3^Z < 1$$

similar to the interaction equation of Section 2.5.

A set of interaction equations similar to those in Section 2.5 was used in the design except that the effects due to torsion were considered.

3.8B.3 FACTOR OF SAFETY

The buckling stress criteria were evaluated to determine the factors of safety against buckling inherent in the criteria. The factors which affect stability were determined and the criteria were evaluated to account for these factors. The basis used to evaluate the criteria to account for the factors were (1) how well established are the effects of the factors on stability of these shells (2) amount of supporting data in the literature and (3) margins marked by the critical stresses and interaction equations used in the criteria. The buckling criteria were found to be very conservative and judged to provide at least a factor of safety of 2.0 against buckling for all loading conditions for which the vessels were designed.

In addition, a load factor of 1.1 was applied to load conditions which include the Safe Shutdown Earthquake (SSE). A load factor of 1.25 will be used with all other load conditions.

Table 3.8B-1 MULTIPLE LOAD COMBINATIONS VARIOUS PLANT CONDITIONS LOADING CONDITIONS (Page 1 of 3)

Load Components	Const. Cond.	Test. Cond.	Normal Design	Norm. Oper. 1/2 SSE	Accident 1/2 SSE	MSLB Accident (Static) 1/2 SSE	Accident SSE	MSLB Accident (Static) SSE	Post Accident Flooding
Personnel Access Lock Load			X	X					
Penetration Loads			X	X	X	X	X	X	
Containment Vessel and Appurtenances Dead Loads	X	X	X	X	X	X	X	X	X
Walkway Live Loads				X					
Spray Header and Lighting Fixtures Live Loads				X		X		X	
Safe Shutdown Earthquake (SSE) Lateral and Vertical Loads							X	X	
Design Internal Pressure or Design External Pressure			X						
One-half Safe Shutdown Earthquake (1/2 SSE) Lateral and Vertical Loads			X	X	X	X			

Table 3.8B-1 MULTIPLE LOAD COMBINATIONS VARIOUS PLANT CONDITIONS LOADING CONDITIONS (Page 2 of 3)

Load Components	Const. Cond.	Test. Cond.	Normal Design	Norm. Oper. 1/2 SSE	Accident 1/2 SSE	MSLB Accident (Static) 1/2 SSE	Accident SSE	MSLB Accident (Static) SSE	Post Accident Flooding
Design Internal Pressure or Pressure Transient Loads					X		X		
Design Temperature			X						
Internal Temperature Range of 60⌒F to 120⌒F				X	X (For pressure transient loads)		X (For pressure transient loads)		
Internal Temperature Range of 80⌒F to 250⌒F					X (For design internal pressure)		X (For design internal pressure)		
Thermal Stress Loads Including Shell Temperature Transients					X		X		
Hydrostatic Load Case 1a or 1B (See Note 1)					X		X		
Hydrostatic Load Case II (See Note 1)									X

Table 3.8B-1 MULTIPLE LOAD COMBINATIONS VARIOUS PLANT CONDITIONS LOADING CONDITIONS (Page 3 of 3)

Load Components	Const. Cond.	Test. Cond.	Normal Design	Norm. Oper. 1/2 SSE	Accident 1/2 SSE	MSLB Accident (Static) 1/2 SSE	Accident SSE	MSLB Accident (Static) SSE	Post Accident Flooding
Wind Loads (See Note 2)	X								
Snow Loads (See Note 2)	X								
Temporary Construction Loads	X								
Internal Test Pressure		X							
Weight of Contained Air		X							
MSLB Pressure						X		X	
Internal Temperature Range of 80⌒F to 325⌒F						X		X	
Airlock Live Load			X	X					
Ice Condenser Duct Loads						X		X	

Notes:
1. Hydrostatic loads case 1A & 1B, and load case II are shown on TVA drawing 48N400.
2. Wind and snow loads do not act simultaneously.
3. For allowable stress condition see Table 3.8.B-2.

Table 3.8B-2 Allowable Stress Intensities Plus Buckling Load Factors

Loading Conditions	Applicable ASME Code Reference (1) for Stress Intensity	Buckling Load Factors
Normal Design Condition Construction Condition	NB-3221	In accordance with ASME Code, Section VIII
Normal Operation Condition	NB-3222	Load factor = 1.25 for both cylindrical portion and hemispherical head
Upset Operation Condition	NB-3223	Load factor = 1.25 for both cylindrical portion and hemispherical head
Emergency Operation Condition	NB-3224	Load factor = 1.10 for both cylindrical portion and hemispherical head
Test Condition	NB-3226	NA
Post-Accident Fuel Recovery Condition	NB-3224	NA

(1) All code references are to the ASME Boiler and Pressure Vessel Code, Section III, Nuclear Power Plant Components, 1971 Edition, with Winter 1971 Addenda.

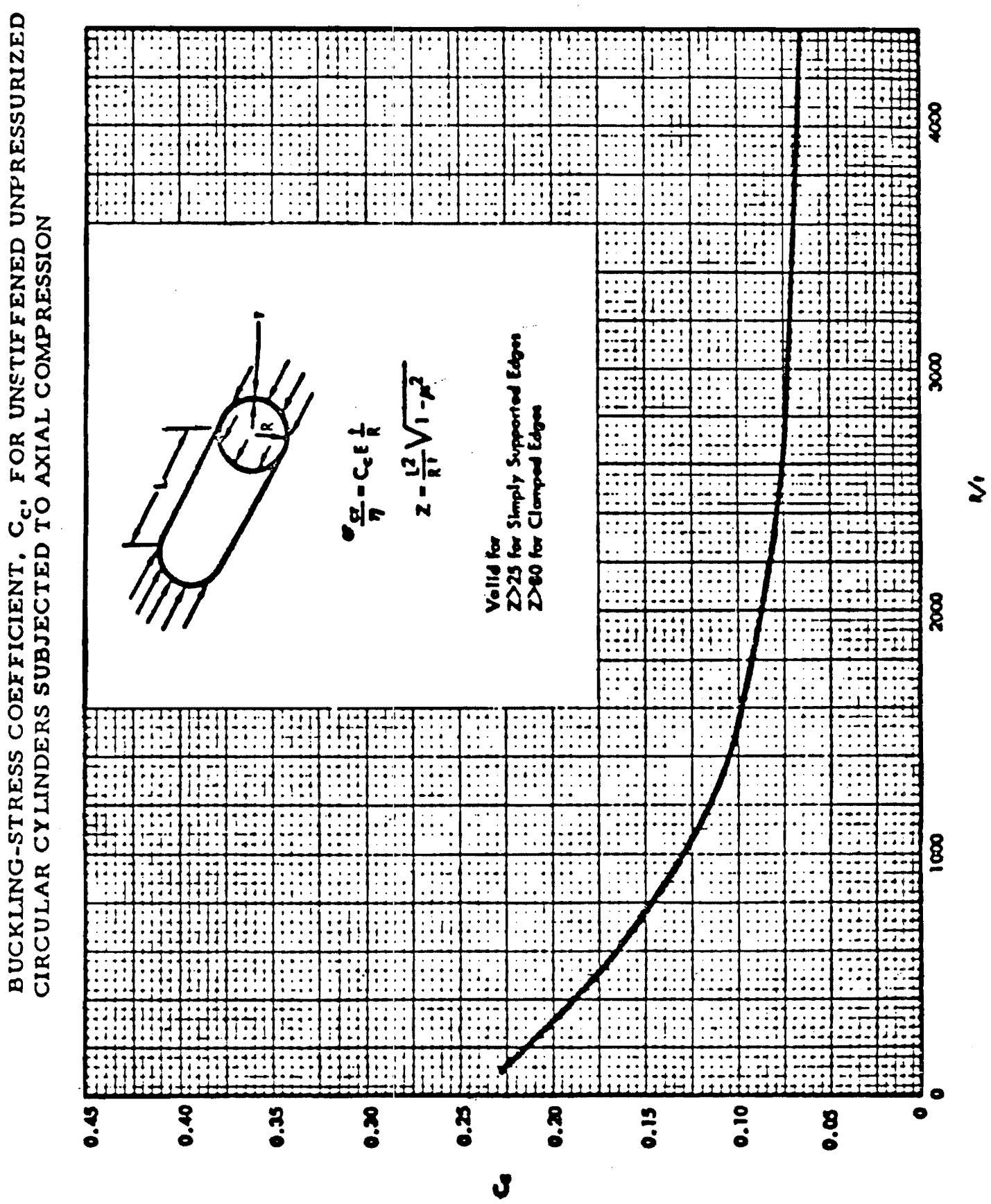

Figure 3.8B-1 Buckling Stress Coefficient, C_C, for Unstiffened Unpressurized Circular Cylinders Subjected to Axial Compression

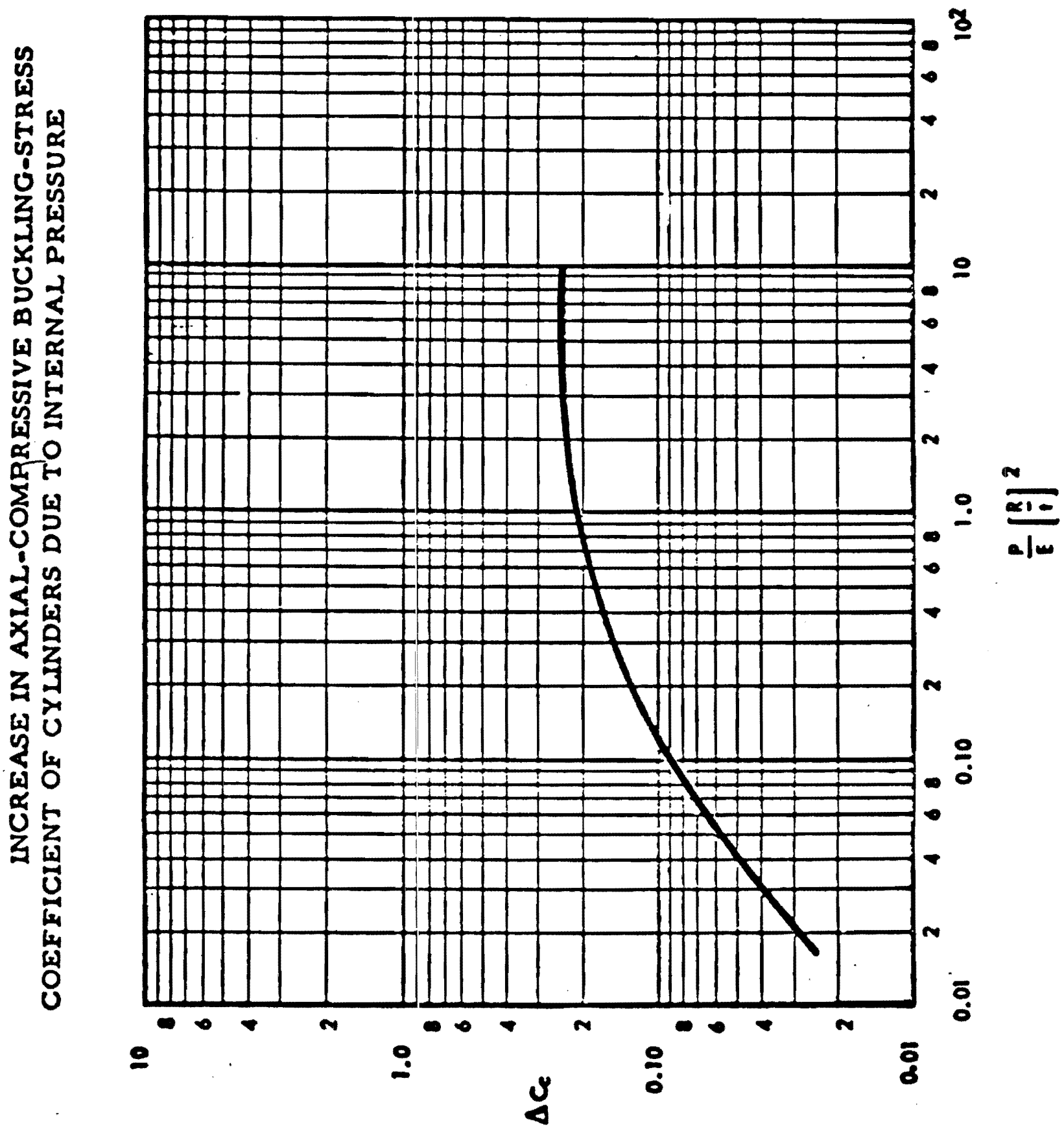

Figure 3.8B-2 Increase in Axial-Compressive Buckling-Stress Coefficient of Cylinders Due to Internal Pressure

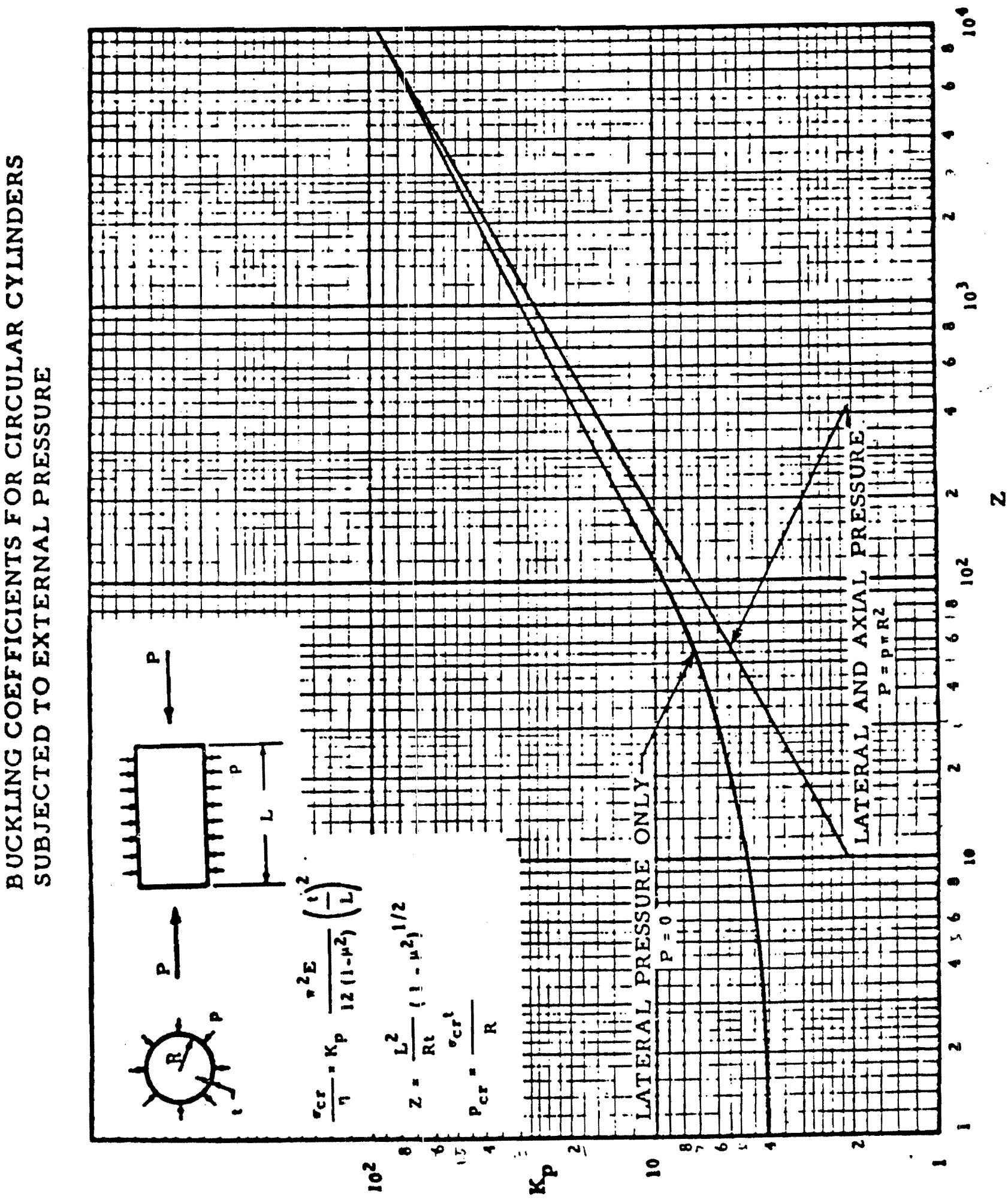

Figure 3.8B-3 Buckling Coefficients for Circular Cylinders Subjected to External Pressure

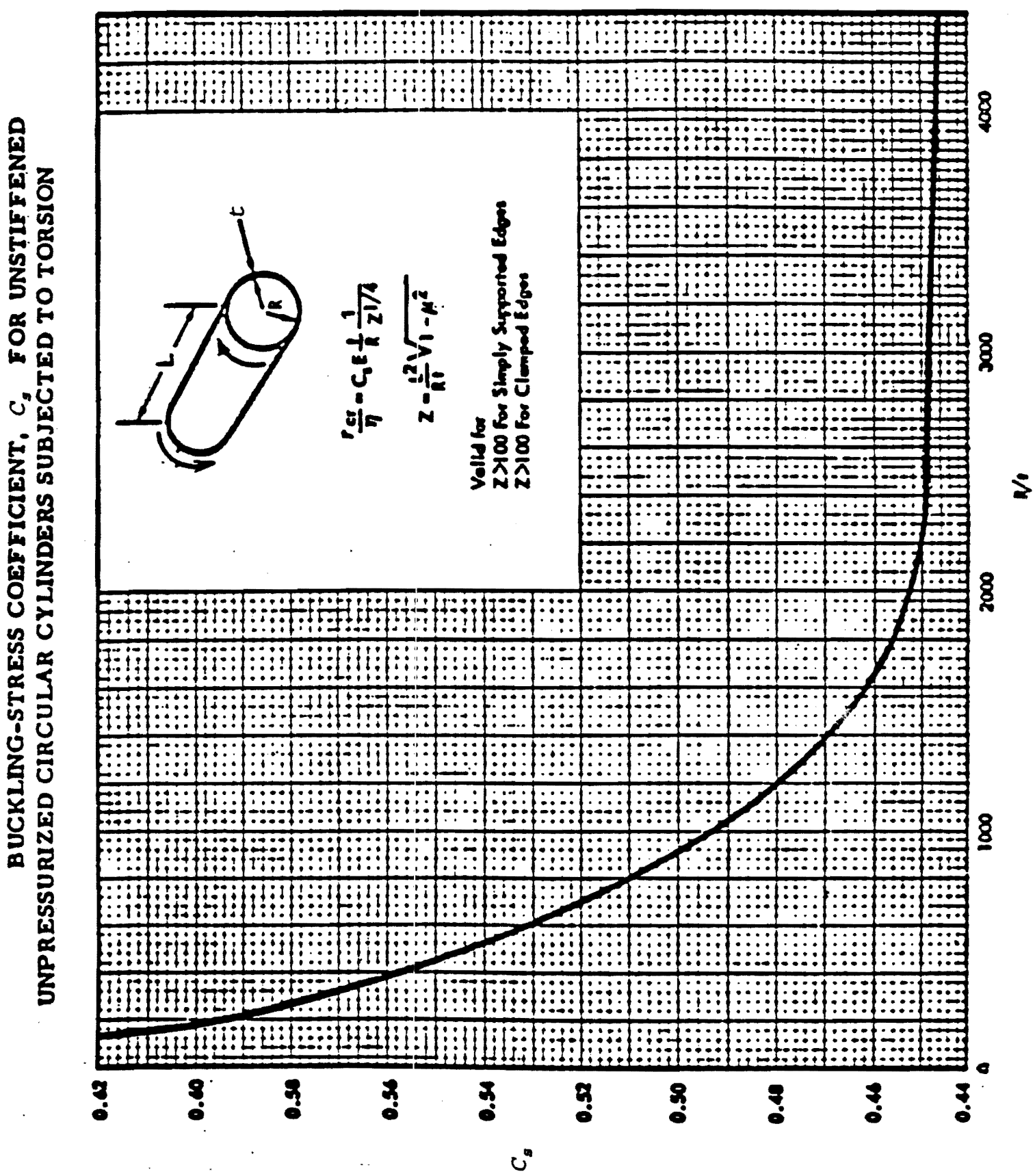

Figure 3.8B-4 Buckling Stress Coefficient, C_S, for Unstiffened Unpressurized Circular Cylinders Subjected to Torsion

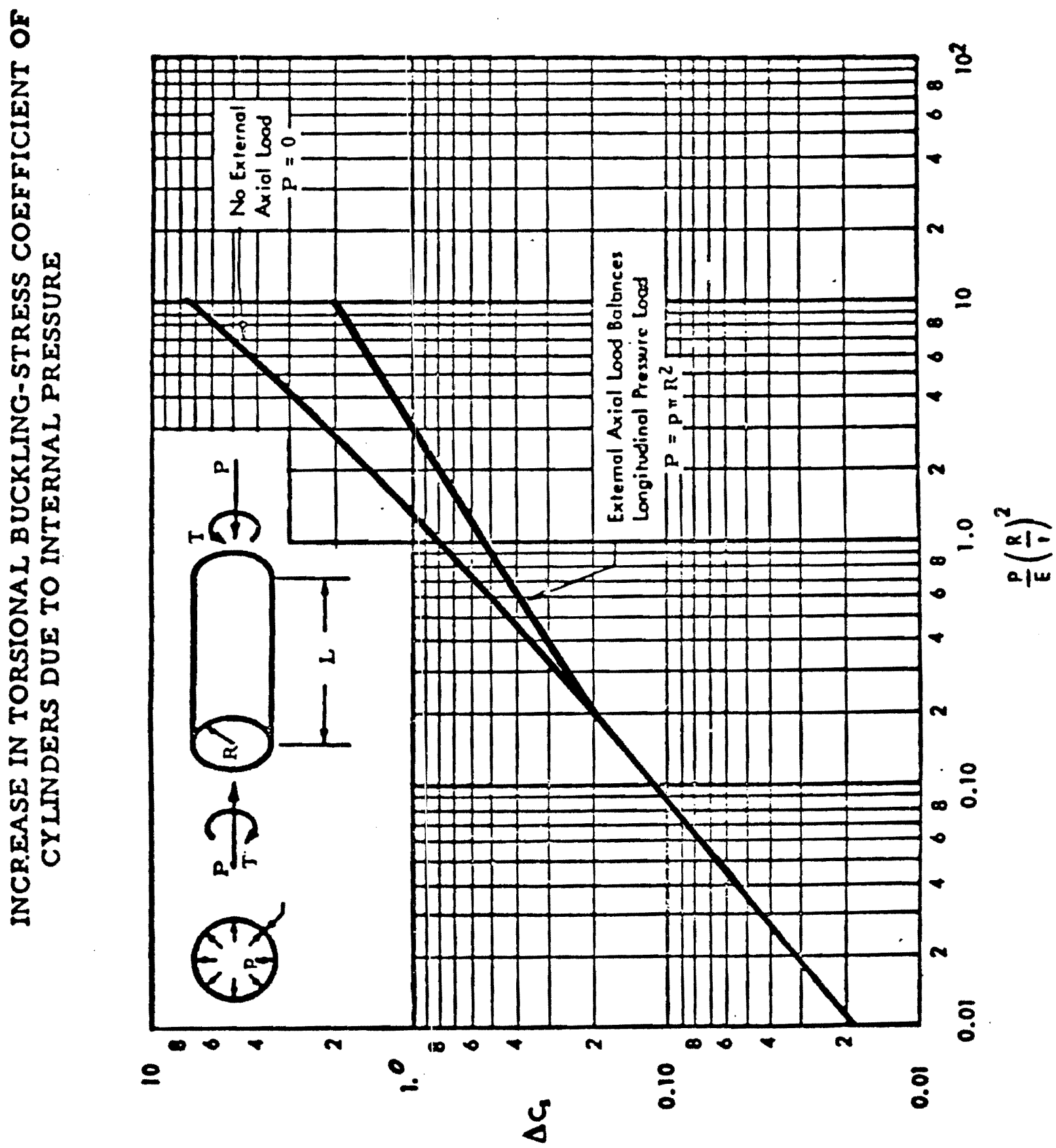

Figure 3.8B-5 Increase in Torsional Buckling-Stress Coefficient of Cylinders Due to Internal Pressure

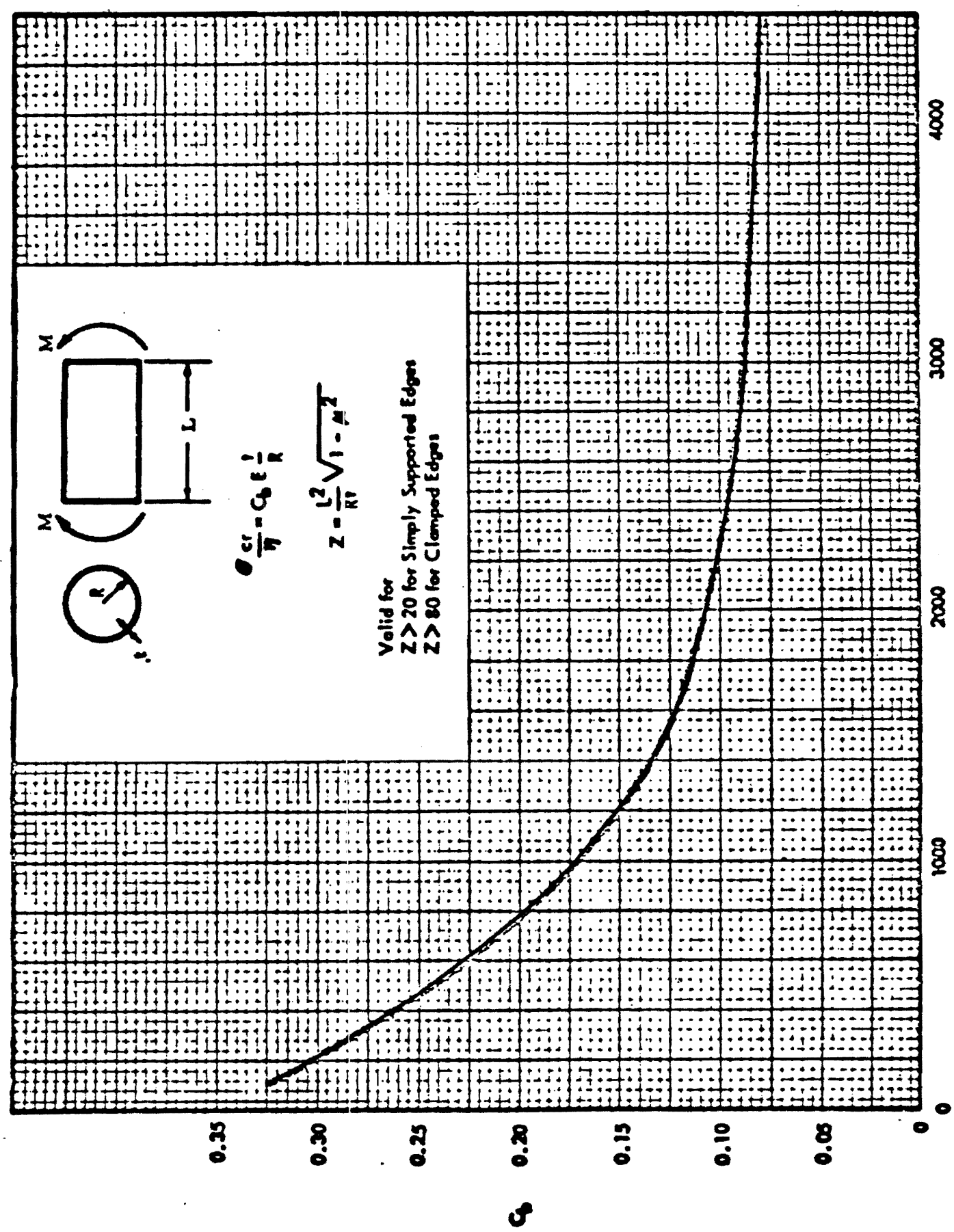

Figure 3.8B-6 Buckling-Stress Coefficient, C_B, for Unstiffened Unpressurized Circular Cylinders Subjected to Bending

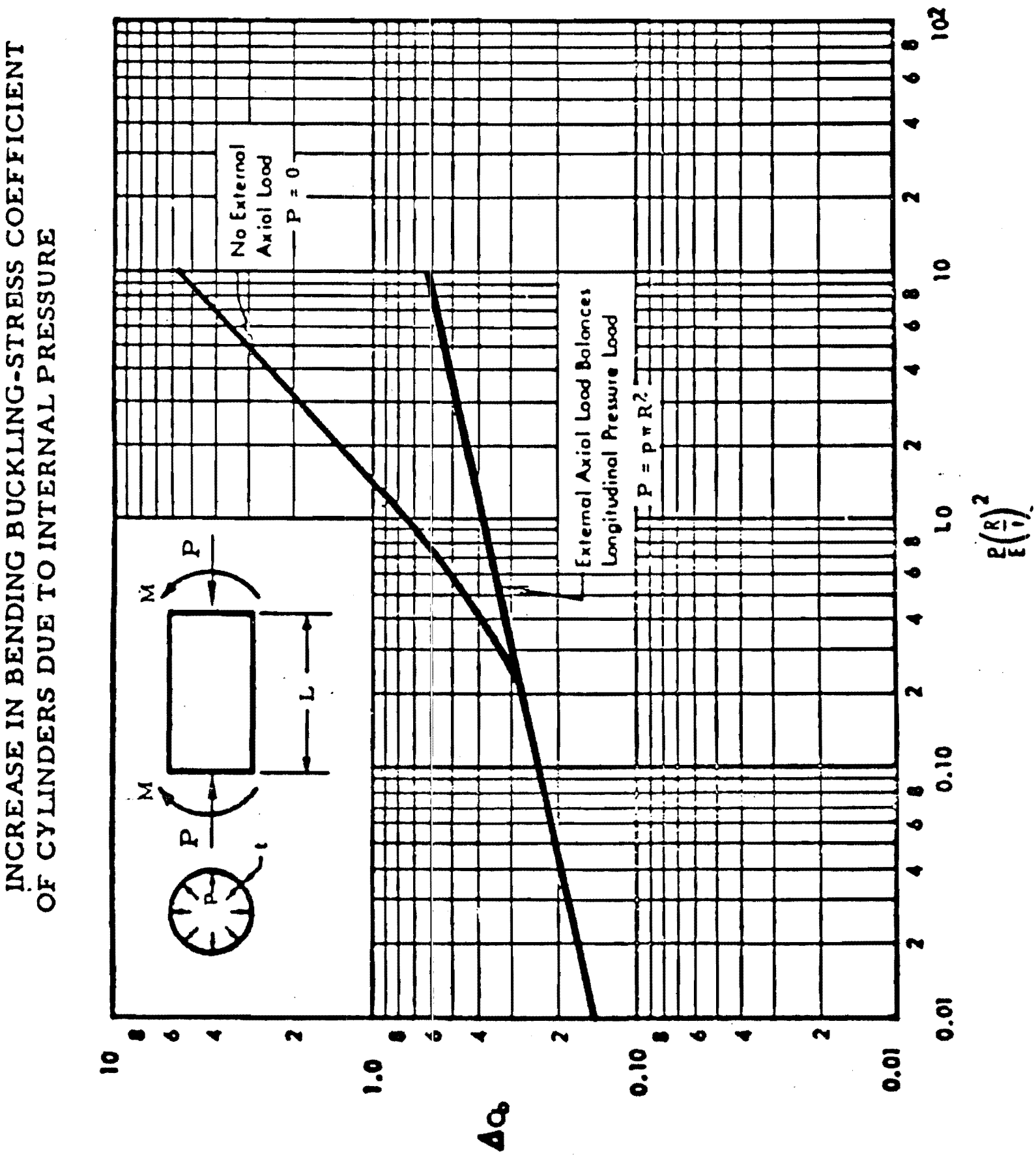

Figure 3.8B-7 Increase in Bending Buckling-Stress Coefficient of Cylinders Due to Internal Pressure

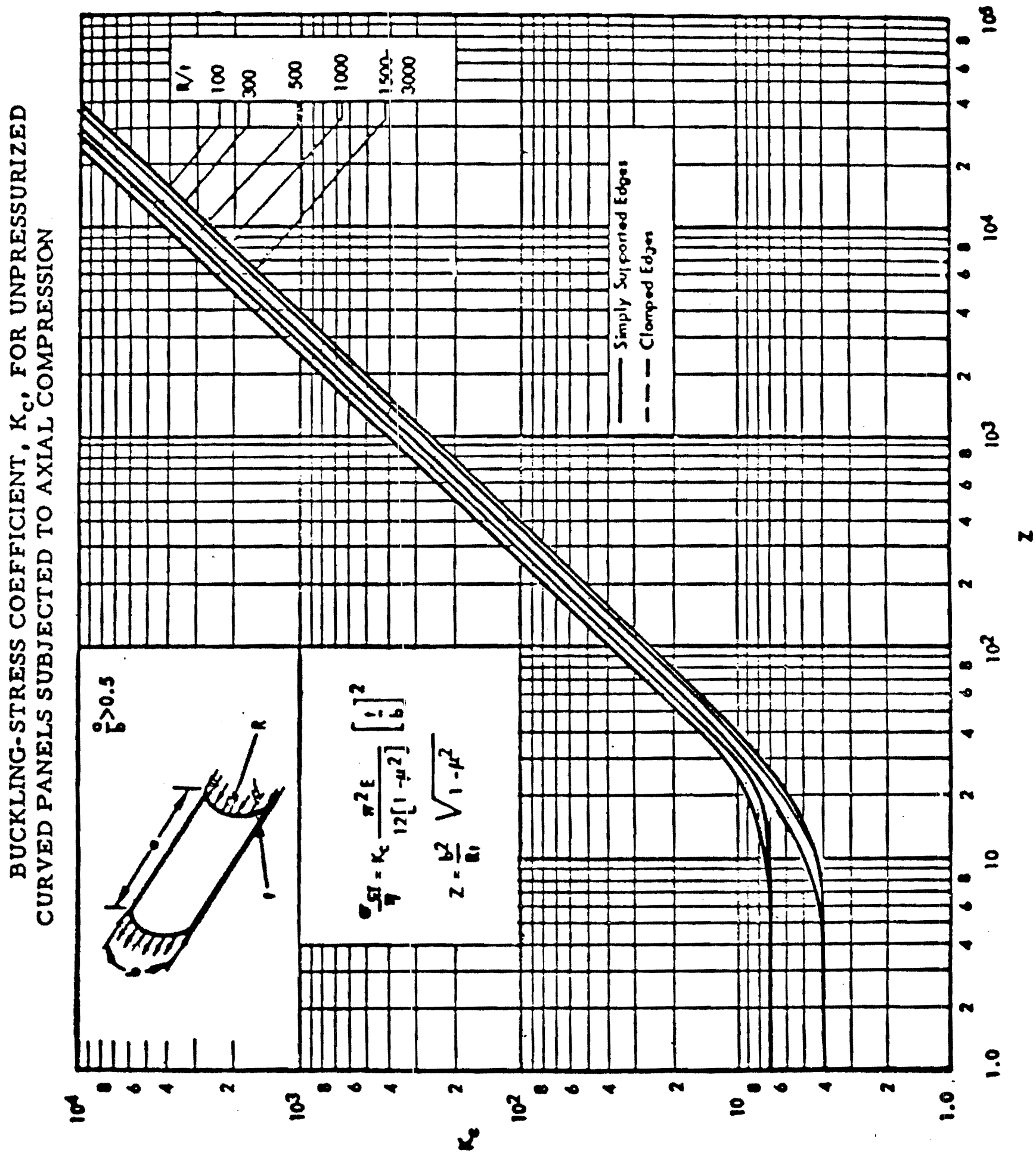

Figure 3.8B-8 Buckling-Stress Coefficient, K_C, For Unpressurized Curved Panels Subjected to Axial Compression

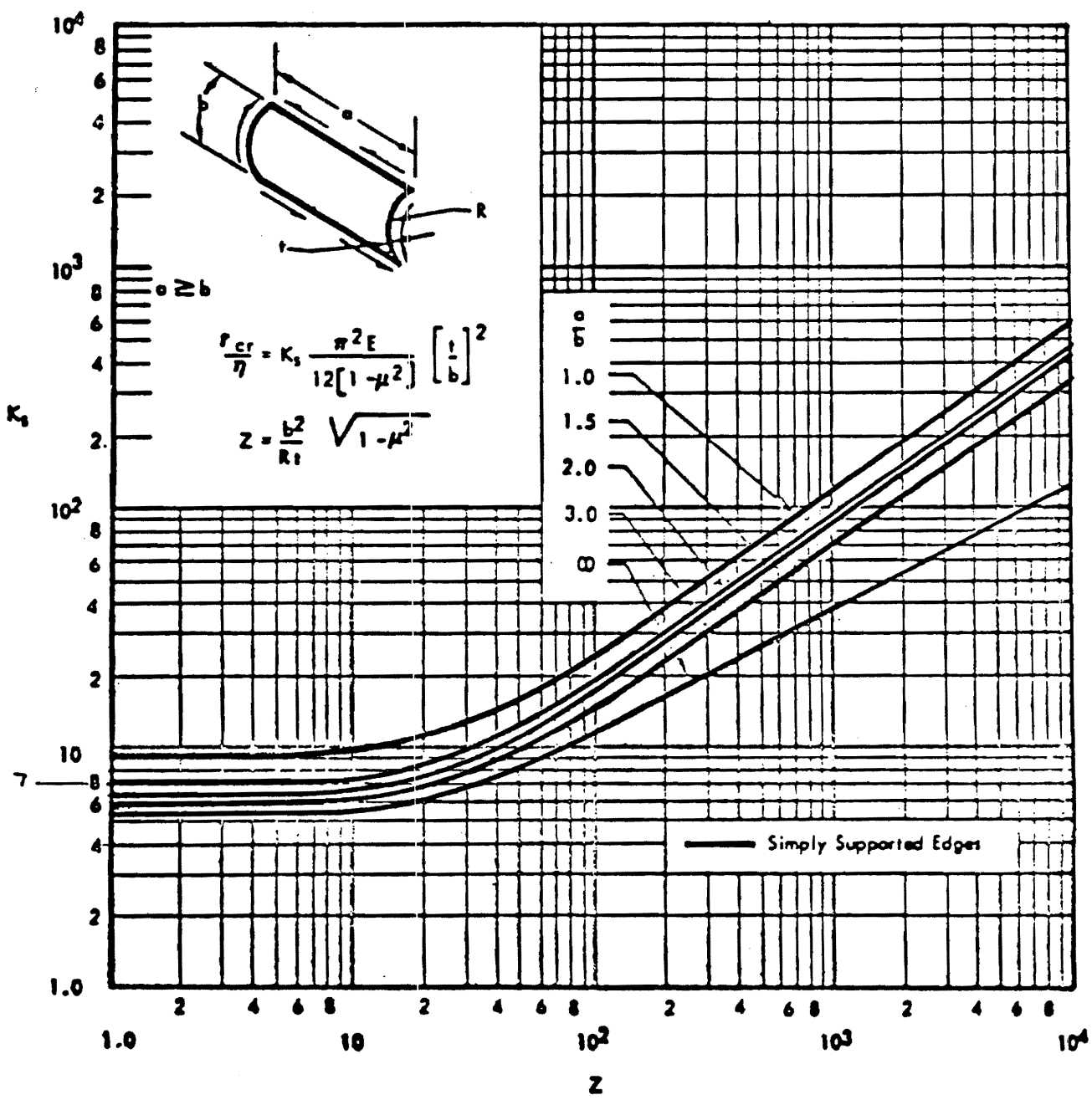

Figure 3.8B-9 Buckling-Stress Coefficient, K_S, for Unpressurized Curved Panels Subjected to Shear

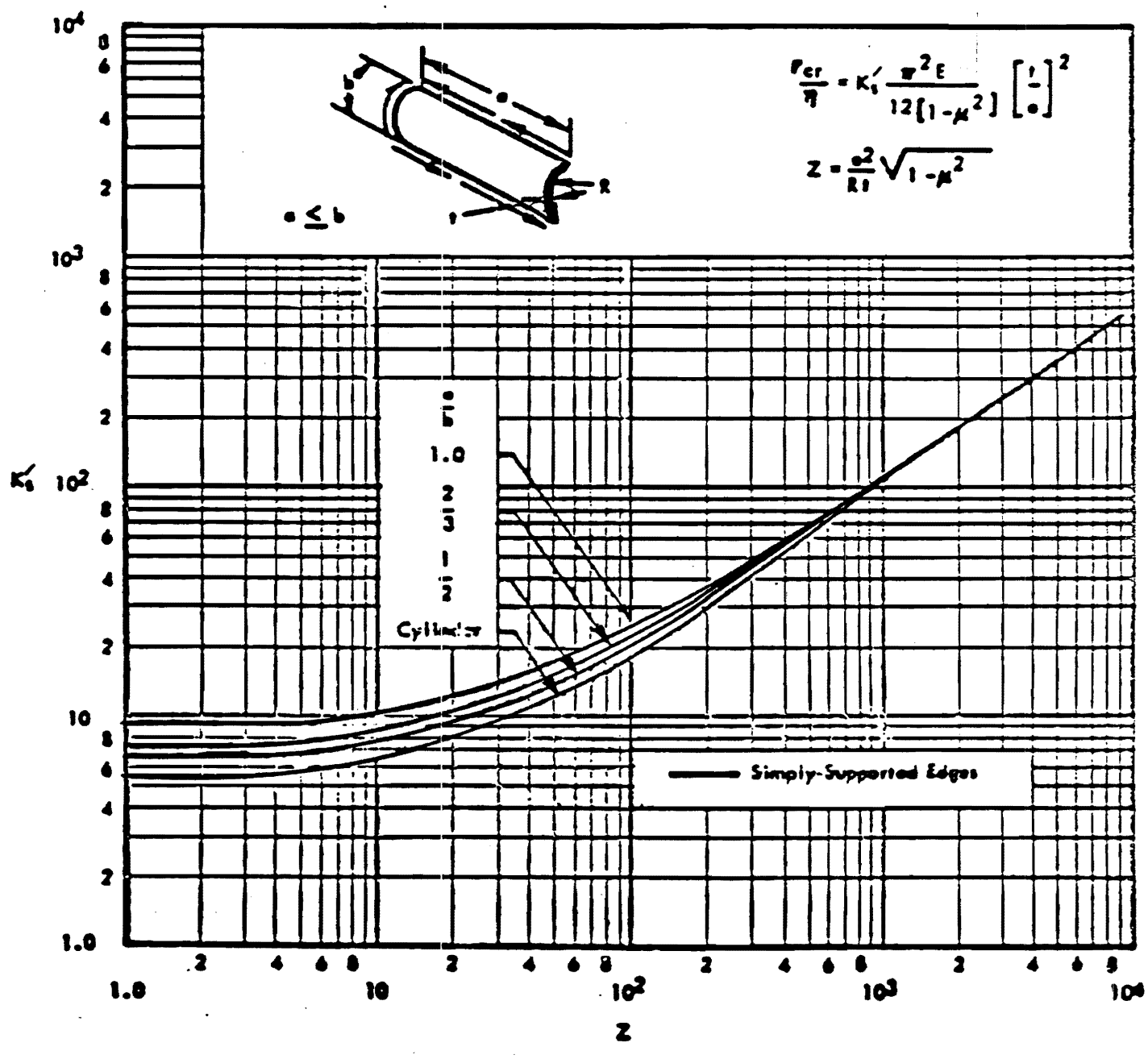

Figure 3.8B-10 Buckling-Stress Coefficient, K'_S, for Unpressurized Curved Panels Subjected to Shear

3.8C DOCUMENTATION OF CB&I COMPUTER PROGRAMS

3.8C.1 INTRODUCTION

This appendix presents abstracts of the computer programs employed in the design and analysis of the Watts Bar containment vessels. These abstracts explain the purpose of the program and give a brief description of the methods of analysis performed by the program.

Analytical derivations are not contained herein, but are in the CB&I Stress Report.

3.8C.2 PROGRAM 1017-MODAL ANALYSIS OF STRUCTURES USING THE EIGEN VALUE TECHNIQUE

The purpose of this program is three-fold:

(1) To calculate the mass and stiffness matrices associated with the structural model.

(2) To determine the undamped natural periods of the model.

(3) To calculate the maximum modal responses of the structure; i.e., deflections, shears, and moments.

The stiffness and mass matrices may be required in order to perform a dynamic analysis of the structure. The maximum modal responses may be used to perform a spectral analysis.

The program has the following options:

(1) Vertical translation.

(2) Torsional modes.

(3) Soil-structure interaction.

(4) Liquid sloshing.

(5) Direct introduction of stiffness and mass matrices.

3.8C.3 PROGRAM 1044-SEISMIC ANALYSIS of VESSEL APPENDAGES

Appendages to a vessel may not significantly contribute structurally to the dynamic responses of a model of a vessel. However, appendages can effect the vessel locally by vibrating differently from the model of the vessel at the point of attachment.

The response spectrum method of analysis is not a strictly adequate way of obtaining the maximum appendage accelerations since it does not include the possible consequences of near resonance between the vessel model and the appendage model.

This paper describes the method used to evaluate the maximum elastic differential accelerations between an independently vibrating appendage model and an elastic beam vessel model at the appendage elevation due to known excitations of the elastic beam model.

The method involves two distinct steps. Firstly, the necessary time-absolute acceleration records are computed at appendage elevations due to model excitations. Secondly, the maximum differential accelerations between each appendage model and the vessel model at the appendage elevation are obtained.

The time-absolute acceleration records at the appendage elevation are computed by use of a step-by-step matrix analysis procedure. The equations of motion for the vessel model are of the form:

$$[M]\{\ddot{u}\} + (AT/\pi)[K]\{\dot{u}\} + [K]\{u\} = -[M]\{\ddot{u}_g\}$$

where

[M] = Mass matrix, order n x n obtained from a modal analysis.

[K] = Stiffness matrix, order n x n, obtained from a modal analysis.

A = Portion of first mode critical damping for the model

T = First mode of the model

[M] = A diagonal matrix, order n x n, with diagonal elements corresponding to elements of the mass excited by translational accelerations.

$\{\ddot{u}\}$ = n x 1 matrix of relative accelerations between the model base and the n degrees of freedom.

$\{\dot{u}\}$ = n x 1 matrix of velocities corresponding to $\{\ddot{u}\}$

$\{u\}$ = n x 1 matrix of displacements corresponding to $\{\ddot{u}\}$

$\{\ddot{u}_g\}$ = n x 1 matrix of translation base acceleration.

n = Degrees of freedom of vessel model.

By taking a small time increment (smaller than the smallest period obtained from the model analysis) and letting accelerations vary linearly within the selected increment, the equations of motion can be integrated for the quantities $\{u\}$, $\{\dot{u}\}$, and $\{\ddot{u}\}$ over the expected time increment [Ref. 1]. The values obtained are superimposed upon the values of these quantities existing at the beginning of the time increment. This process

is repeated for the duration of the excitation. The time-absolute acceleration records for each translational degree of freedom are the sums of {ü} and {$ü_g$} taken throughout the history of the excitation.

The second step is similar to the first step. The equation of motion (n = 1) is written for the appendage as a single degree-of-freedom elastic model using the time-absolute acceleration record obtained in Step 1 at the appendage elevation as the excitation. This equation is solved in the same manner used in Step 1. The maximum absolute value of {ü} obtained is the quantity desired. It is the maximum differential acceleration between the appendage model and the vessel model due to a known excitation of the vessel mode.

For any appendage, this two-step procedure should be executed three times. This is required to evaluate normal, tangential and vertical appendage accelerations with respect to a vessel cross-section.

3.8C.4 PROGRAM E1668-SPECTRAL ANALYSIS FOR ACCELERATION RECORDS DIGITIZED AT EQUAL INTERVALS

Program E1668 evaluates dynamic response spectra at various periods and presents the results on a printed plot. Given the time-acceleration record, the program numerically integrates the normal convolution time integral for various natural periods and damping ratios. The computed relative displacements, relative and pseudo-relative velocities, and absolute and pseudo-absolute accelerations are tabulated for periods from 0.025 seconds to 1 second.

3.8C.5 PROGRAM 1642-TRANSIENT PRESSURE BEAM ANALYSIS

The program was developed to perform the numerical integration required for the transient pressure beam analysis. The pressure transient curve for each compartment is read in and stored as a series of coordinates. At any time instant the total force acting at each compartment is calculated by multiplying the pressures by the corresponding areas of the shell over which they act. Each force is then distributed to the vessel model masses directly above and below. The proportion applied to each mass is based upon their respective distances from the force.

For a given increment the program checks the current time, determines the current pressure in each compartment, calculates the current force on each mass and applies a recurrence formula. The deflection values, y(t) and y(t-Δt) are updated, the current time incremented, and the process is repeated.

The values of the orthogonal deflections are stored and also printed out for a prescribed number of times, every ten increments or so, and the equivalent static forces determined. Equivalent static forces are those which produce deflections identical to the calculated kinetic deflections; they are obtained by multiplying the deflection vector by the stiffness matrix.

[F] equivalent = [K] [Y]

The shears and moments at the particular time are then determined from statics:

$$Q = \Sigma F$$

$$M = \Sigma F \ . \ \text{moment arm}$$

The maximum moments, M = $\sqrt{M_x^2 + M_y^2}$

and maximum shears, Q = $\sqrt{Q_x^2 + Q_y^2}$ are then printed out at selected locations.

In addition the program will also print out an acceleration trace at the mass points.

3.8C.6 PROGRAM E1623-POST PROCESSOR PROGRAM FOR PROGRAM E1374

Program E1623 was written specifically for the TVA Watts Bar Containment Vessels. It performs the following operations:

(1) Using Fourier data generated by Program El374 (Dynamic Shell Analysis), the summed displacements, forces and stresses found for various points around the shell circumference at each output point on the meridian.

(2) The maximum of the summed values along with the associated time and azimuth are saved for each elevation and printed out at the end of the problem.

(3) The following tables are printed:

(1) Radial deflection, α, at each elevation versus azimuth

(2) Longitudinal force, N_Φ, at each elevation versus azimuth

(3) Longitudinal moment, M_Φ, at each elevation versus azimuth

(4) Circumferential force, $N_{\Phi\pi,}$ at each elevation versus azimuth

The time basis for these tables is the occurrence of the minimum longitudinal force at the base.

(4) Ring forces are calculated and then the maximums are pointed out.

(5) Displacement traces at several elevations can be saved on a tape or disk unit.

(6) The membrane stress resultants are saved on either a tape or disk unit for input into the buckling check program.

Program E1374 writes the Fourier amplitude results of the fundamental variables (α, T_ϕ, B_Φ, T_π, Q, N_Φ, M_Φ, N) on a labeled tape after each timestop. Program E1623 reads this tape, interpolates to obtain the values at the output times, and calculates the remaining forces and all the stresses.

The amplitudes are then summed using the following equation:

$$f(\chi,\theta,t) = \sum_{n=1}^{m} g_n(x,t)\cos n\theta + \sum_{n=1}^{m} h_n(x,t)\sin n\theta$$

where:

X = meridinal coordinate

t = time

g_n (x, t) = amplitudes of cosine harmonics

h_n (x, t) = amplitudes of sine harmonics

θ = azimuth

f(x, θ, t) = Fourier sum

m = maximum number of circumfere waves

3.8C.7 PROGRAM E1374-SHELL DYNAMIC ANALYSIS

3.8C.7.1 Introduction

Program E1374 is CBI's shell dynamic analysis program. Presently, it is capable of extracting eigenvalues and performing undamped transient analyses.
Non-axisymmetric loads can be handled through the use of appropriate Fourier series.

The equation of motion for a particular Fourier harmonic n of an undamped system is

$$[M_n][U_n] + [K_n][\overset{\infty}{U}_n] = [P_n]$$

where:

$[M_n]$ = Mass matrix

$[K_n]$ = Stiffness matrix

$[P_n]$ = Applied load

$[U_n]$ = Displacement

$[\ddot{U}_n]$ = Acceleration

Note that all of the above are functions of n.

In order to calculate free vibration frequencies and mode shapes the applied load is set equal to zero, $[U_n]$ is assumed to be a harmonic function of time, and the eigenvalues and eigenvectors of the resulting equation obtained.

If the transient response due to a time-varying load is required, a numerical integration technique is used.

Since Program E1374 is not set up to handle longitudinal stiffeners, the integration for this portion of the shell is performed using Program 781. The influence values are then converted to stiffness matrix form and stored on disc. After Program E1374 has set up the stiffness matrices for the unstiffened shell, the matrices for segments with stiffening are replaced with the Program 781 matrices from disc. The solution in Program E1374 then continues in the standard manner. This consists of assembling the overall stiffness matrix $[K_n]$ and load vector $[C_n]$, reducing to upper triangular form, and back-substituting.

3.8C.8 PROGRAM E1622-LOAD GENERATION PREPROCESSOR FOR PROGRAM E1374

In order to perform non-axisymmetric analyses on shells, the load must often be defined using Fourier series representation. The purpose of Program E1622 is to calculate and store on magnetic tape a time history of the Fourier pressure amplitudes. The format of this tape is designed specifically for use with Program E1374.

In order to calculate the amplitudes of the harmonics several assumptions are made in the program.

(1) A linear function in the circumferential direction is assumed between given points.

(2) Only distributed loads are considered.

(3) The model consists of a cylindrical shell and optional hemispherical top head.

(4) The pressure has a block type distribution in the longitudinal direction.

(5) Any initial pressure acting on the shell can be subtracted from the input pressure histories.

(6) Amplitudes for both sine and cosine terms can be calculated with the user supplying the range of harmonics to be output.

3.8C.9 PROGRAM E1624 SPCGEN-SPECTRAL CURVE GENERATION

Program E1624 reads the Fourier amplitudes of the deflection transients stored on magnetic tape from the output of Program E1374. The program calculates the accelerations at uniform time intervals and evaluates the response spectra. From the deflection transient for each harmonic, the acceleration traces are computer generated using three point central difference for the first and last three time steps, and a seven point central difference elsewhere.

3.8C.10 PROGRAM 781, METHOD OF MODELING VERTICAL STIFFENERS

N = No. of vertical stiffeners around

E = Modulus of elasticity

The shell shown in Figure 3.8C-1 is modeled using 2 layers. The inside layer represents the shell and, therefore, has the normal isotropic material properties. The outer layer, on the other hand is described as an orthotropic material having the following properties.

$t_2 = d$

$$E_{\phi_2} = \frac{bN}{2\pi R}E$$

$E_{\theta 2} = 0$

$G_{\varphi\theta 2} = 0$

where:

t_2 = Thickness of outer layer

$E_{\varphi 2}$ = Modulus of elasticity of outer layer in longitudinal direction

$E_{\theta 2}$ = Modulus of elasticity of outer layer in circumferential direction.

$G_{\varphi\theta 2}$ = Shear modulus of outer layer.

3.8C.11 PROGRAM 119-CHECK of FLANGE DESIGN

This program is used for the design of bolted flanges. The program checks the flange design based on Appendix II of ASME Code, Section VIII. Bolt and flange stresses are computed for both the bolt-up and design conditions. If the bolt and gasket are not overstressed, the computer automatically calculates the required flange thickness or checks any supplied thickness. The minimum gasket width required to prevent crushing, and the maximum pressure that the flange is capable of resisting under the design conditions are automatically calculated.

3.8C.12 PROGRAM 772-NOZZLE REINFORCEMENT CHECK

This is a program for checking nozzle reinforcing. It is designed essentially for containment vessels, and adheres to area replacement criteria specified by ASME

Section III and VIII. The program does no design work, merely checking the adequacy of pre-selected reinforcing plate dimensions and weld sizes.

3.8C.13 PROGRAM 1027-WRC 107 STRESS INTENSITIES AT LOADED ATTACHMENTS FOR SPHERES OR CYLINDERS WITH ROUND OR SQUARE ATTACHMENT

This program determines the stress intensities in a sphere or cylinder at a maximum of 12 points around an externally loaded round or square attachment. Stresses resulting from external loads are superimposed on an initial pressure stress situation. The program computes stresses at three levels of plate thicknesses: outside, inside, and centerline of plate. The 12 points investigated are shown in Figure 3.8C-2. Four points at the edge of attachment, at 1/2 RT from the edge of attachment and at the edge of reinforcement.

The program determines 3 components for each stress intensity:

(1) σ_X = A normal stress parallel to the vessel's longitudinal axis

(2) σ_φ = A normal stress in a circumferential direction

(3) τ = A shear stress

The program has an option, whereby the influence coefficients can be calculated directly. The program uses the methodology from the "Welding Research Council Bulletin #107", of December 1968. Additionally, the program contains extrapolations of the curves for cylinders in WRC 107 for gamma up to 600. It should be noted that the use of the program requires complete familiarity with WRC 107 publication.

3.8C.14 PROGRAM 1036M-STRESS INTENSITIES IN JUMBO INSERT PLATES

This program determines the stress intensities in a "Jumbo" insert plate (a reinforcing plate with multiple penetrations) in a cylindrical vessel at 8 points around one of these penetrations due to the loading on that penetration plus the loadings on the 4 adjacent penetrations all as superimposed on an initial stress situation. It does this at three levels of plate thickness: outside, inside, and centerline of plate. The 8 points investigated are shown in Figure 3.8C-3. The 4 points on radius Rθ are at the junction of the penetration and the insert plate. The other 4 points are other points of interest; normally, they will be at the midpoints in the clear space between penetrations or at the edge of reinforcing. Although 5 penetrations are considered, each point is analyzed as though it were only influenced by 2 (the central penetration plus the penetration on the same axis as the point concerned).

The program also determines 3 components for each stress intensity:

(1) σ_x = a normal stress parallel to the vessel's longitudinal axis

(2) σ_φ = a normal stress in a vessel's circumferential direction

(3) τ = a shear stress

Each of these is composed of 3 subcomponents:

(1) One due to the central penetration's loading

(2) One due to the loading on the next adjacent penetration

(3) An initial stress component (input)

The program has an option whereby the penetration loads will be considered reversible or nonreversible in direction. Under the reversible option, (see Figure 3.8C-4) only the data associated with the most severe loading situations is printed out.

Most of the analysis and notation used in the program is taken directly from the "Welding Research Council Bulletin #107" of December 1968. Use of the program requires complete familiarity with this publication.

The analysis in WRC 107 is for a single penetration. This program analyzes the several penetrations individually, using WRC 107 techniques verbatim, and then through superposition obtains the composite results. The adjacent penetrations must be on a cardinal line of the central penetration in order to use WRC 107 methods. This has required a very conservative extension of the WRC 107 analysis. WRC 107 analysis applies only to the points on the penetration to shell juncture. This program makes stress determinations at points removed from the junction by fictitiously extending the radius of any penetration to any point at which a stress determination is desired. This disregards the statement in WRC 107 that "these stresses attenuate very rapidly at points removed from the penetration to shell juncture". Furthermore, in some cases, the moment induced stresses at both the juncture and at points removed from the juncture are increased by 20% per discussion in WRC 107. Figure 3.8C-5 shows the cases for the 20% increase and indicates the thickness used for the calculation of the parameters (per WRC 107) and stresses.

The program contains extrapolations of the curves in WRC 107 for T up to 600. The program is limited to the domains and range of Figures 1A through 4C in WRC 107 ($0 < \beta \leq 0.5$ and $5 \leq T \leq 600$).

REFERENCE

(1) Wilson & Clough, Dynamic Response by Step-By-Step Matrix Analysis

THIS PAGE INTENTIONALLY BLANK

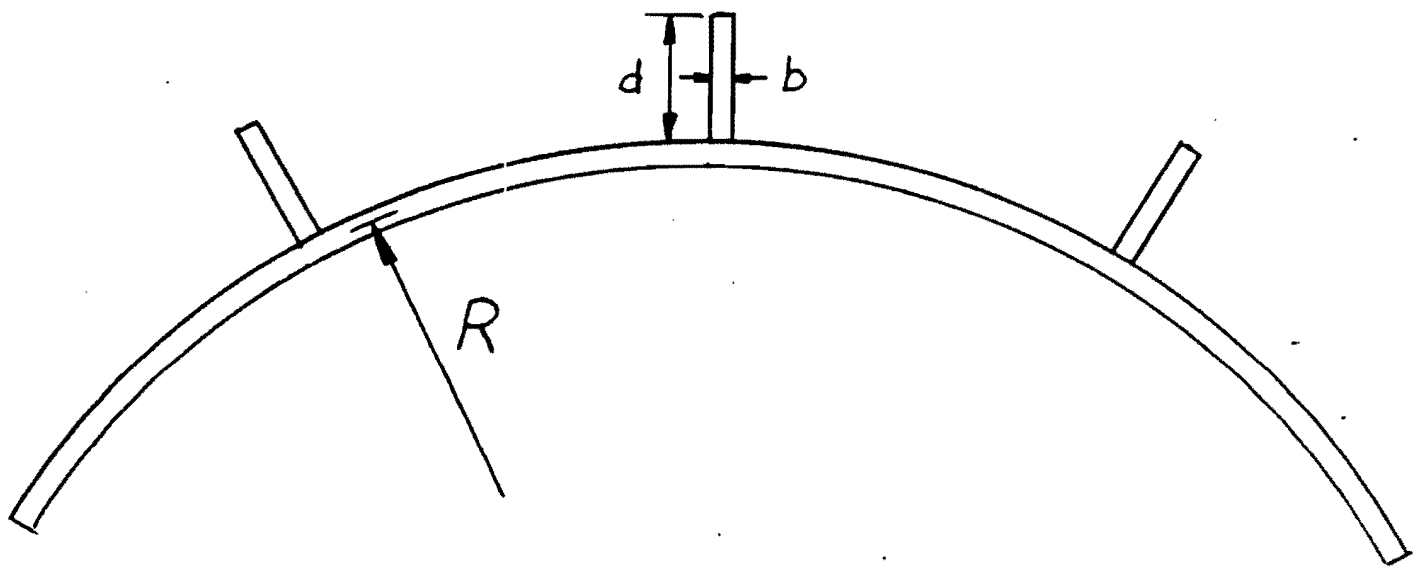

Figure 3.8C-1 Vertical Stiffener Model

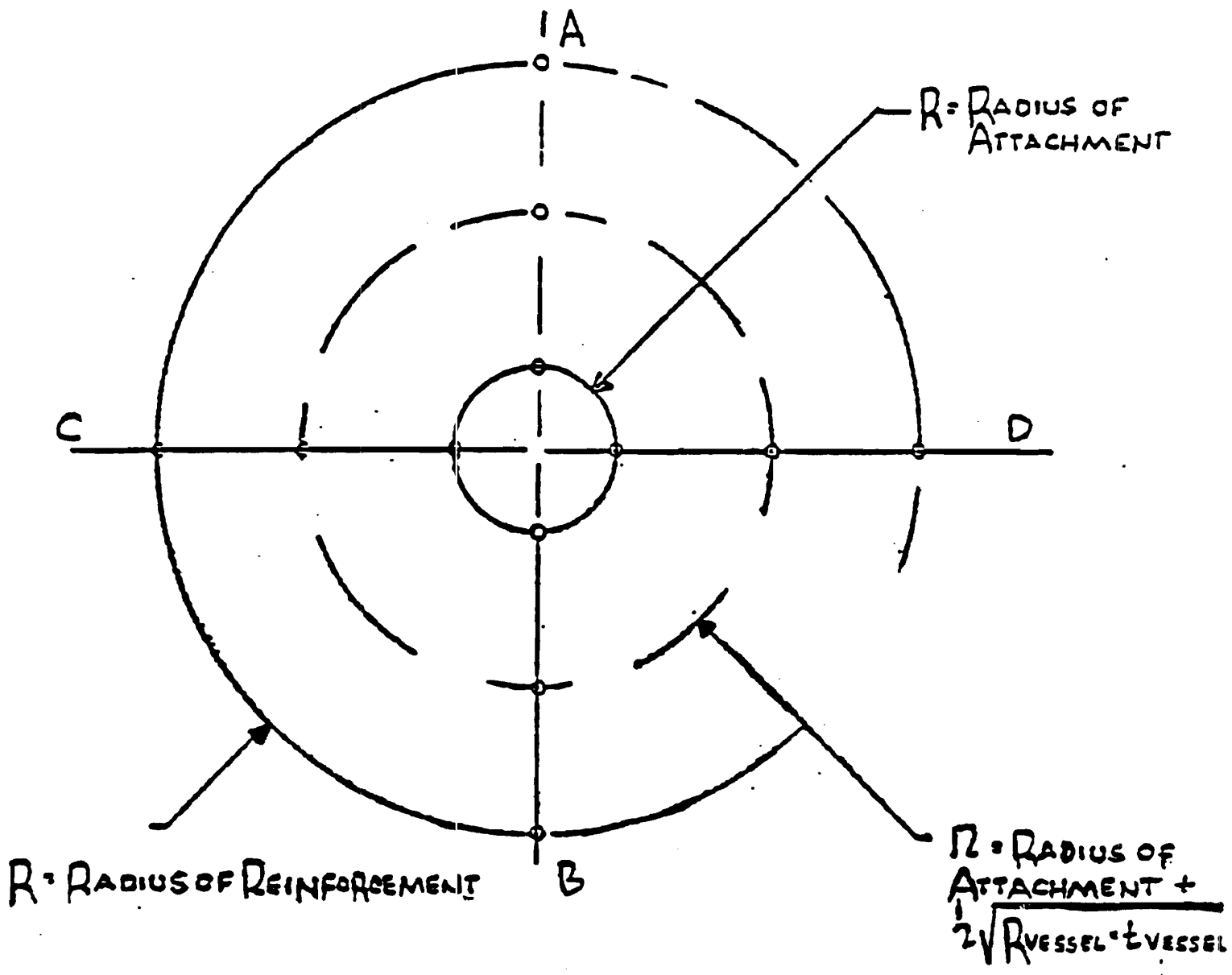

Figure 3.8C-2 Points of Stress Calculation

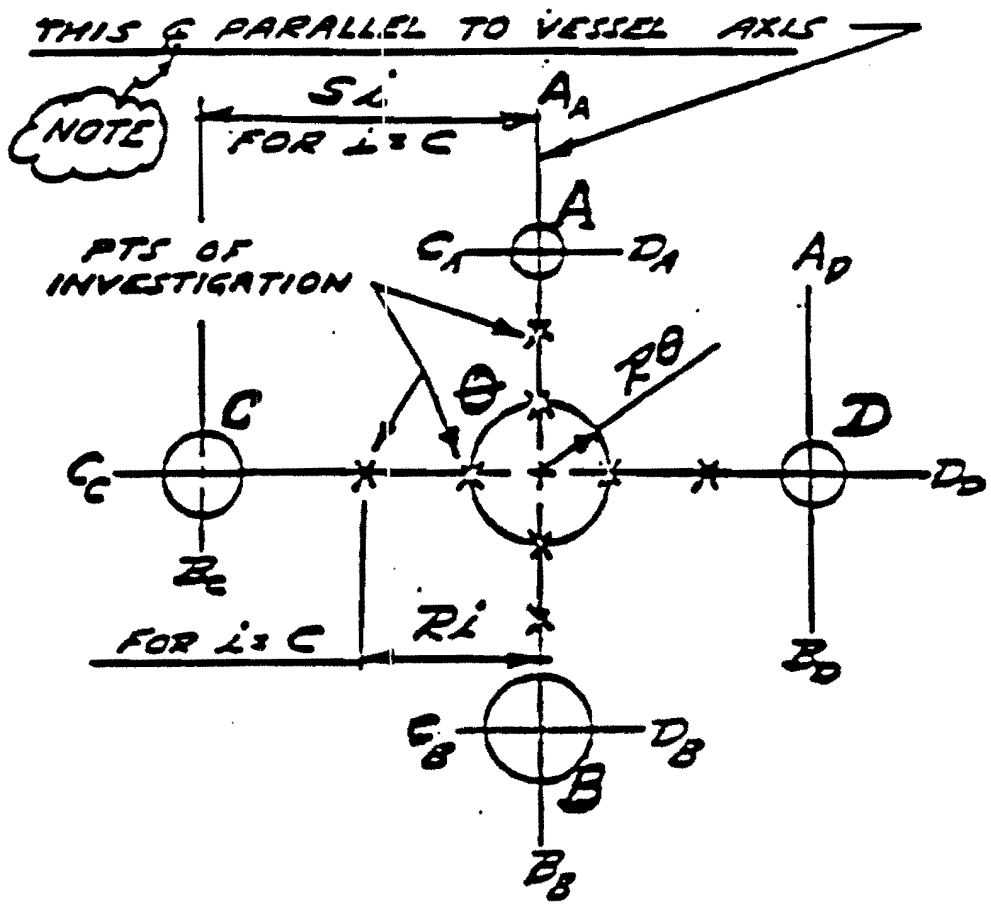

Figure 3.8C-3 Jumbo Insert Plant Points of Stress Intensities

L	P	V_L	V_C	M_L	M_C	M_T
1	+	+	+	+	+	+
2	+	+	+	+	+	−
3	+	+	+	+	−	+
4	+	+	+	+	−	−
5	+	+	+	−	+	+
6	+	+	+	−	+	−
7	+	+	+	−	−	+
8	+	+	+	−	−	−
9	+	+	−	+	+	+
10	+	+	−	+	+	−
11	+	+	−	+	−	+
12	+	+	−	+	−	−
13	+	+	−	−	+	+
14	+	+	−	−	+	−
15	+	+	−	−	−	+
16	+	+	−	−	−	−
17	+	−	+	+	+	+
18	+	−	+	+	+	−
19	+	−	+	+	−	+
20	+	−	+	+	−	−
21	+	−	+	−	+	+
22	+	−	+	−	+	−
23	+	−	+	−	−	+
24	+	−	+	−	−	−
25	+	−	−	+	+	+
26	+	−	−	+	+	−
27	+	−	−	+	−	+
28	+	−	−	+	−	−
29	+	−	−	−	+	+
30	+	−	−	−	+	−
31	+	−	−	−	−	+
32	+	−	−	−	−	−

NOTE:

L REPRESENTS THE LOADING SITUATION NUMBER.

THE PROGRAM SAVES THE LOADING SITUATION NUMBER THAT PRODUCED A MAXIMUM STRESS INTENSITY. LATER IT MUST RECONSTRUCT THE LOADING ASSOCIATED WITH THIS NUMBER FOR PRINT OUT PURPOSE.

Figure 3.8C-4 Determination of Loads on Center Penetration Associated with Maximum Stress Intensity

PENETRATION ANALYSIS

STYLE OR REINFORC.	LOCATION OF ANALYSIS	REFERENCE FOR CURVES	RADIAL M * PARAM/STRESS	RADIAL M % INCR.	TANG M * PARAM/STRESS	TANG M % INCR.	RADIAL N * PARAM/STRESS	RADIAL N % INCR.	TANG N * PARAM/STRESS	TANG N % INCR.	COMMENTS
INSERT (WIDTH < 1.65 $\sqrt{R T_{INS}}$)	INSERT TO NECK	107	T_{INS}/T_{INS}	20	T_{INS}/T_{INS}	20	T_S/T_{INS}	–	T_S/T_{INS}	–	
	½ $\sqrt{R T_{INS}}$ FROM LOCAL STRESS	107	T_{INS}/T_{INS}	20	T_{INS}/T_{INS}	20	T_S/T_{INS}	–	T_S/T_{INS}	–	SEE NOTE 3
	INSERT TO SHELL	107	T_S/T_S	–	T_S/T_S	–	T_S/T_S	–	T_S/T_S	–	SEE NOTE 4
PAD (WIDTH < 1.65 $\sqrt{R T_{EQ}}$)	PAD TO NECK	107	T_{PAD}/T_{PAD}	20	T_{PAD}/T_{PAD}	20	T_S/T_{PAD}	–	T_S/T_{PAD}	–	
	½ $\sqrt{R T_S}$ FROM LOCAL STRESS	107	T_{PAD}/T_{PAD}	20	T_{PAD}/T_{PAD}	20	T_S/T_{PAD}	–	T_S/T_{PAD}	–	SEE NOTE 3
	EDGE OF PAD	107	T_S/T_S	–	T_S/T_S	–	T_S/T_S	–	T_S/T_S	–	SEE NOTE 4
SHELL (NO REINF. ON WIDTH ≥ 1.65 $\sqrt{R T_S}$)	NECK TO SHELL	107	T_S/T_S	–	T_S/T_S	–	T_S/T_S	–	T_S/T_S	–	
	½ $\sqrt{R T_S}$ FROM NECK	107	T_S/T_S	–	T_S/T_S	–	T_S/T_S	–	T_S/T_S	–	SEE NOTE 3

NOTES:
1) * INDICATES THICKNESS FOR CALCULATION OF PARAMETERS AND STRESSES.
2) ANY ALTERNATE METHOD MAY BE USED FOR A LOCATION OF ANALYSIS IN COMBINATION WITH THE ABOVE METHOD FOR OTHER LOCATIONS.
3) CHECK ONLY IF STRESSES @ OTHER LOCATIONS > 1.1 S_m. USE T_S AND NO INCREASE IN STRESSES IF OUTSIDE REINFORCING.
4) STRESSES DUE TO LOADS MAY BE REDUCED IN ACCORDANCE WITH WRC 95.

NOMENCLATURE
T_{INS} = THICKNESS OF INSERT
T_{EQ} = EQUIVALENT THICKNESS
T_{P+S} = THICKNESS OF PAD PLUS SHELL
T_S = THICKNESS OF SHELL

Figure 3.8C-5 Penetration Analysis

THIS PAGE INTENTIONALLY BLANK

3.8D COMPUTER PROGRAMS FOR STRUCTURAL ANALYSIS

Historical Information [Computer programs used for structural analysis meet the TVA Quality Assurance Program for computer software. The following sections are for historical purposes.]

Computer programs used for structural analysis and design have been validated by one of the following criteria or procedures:

(a) The following computer programs are recognized programs in the public domain:

Program	Usage Start Date:Year	Hardware	Source
AMG032	1965	IBM	R&H
AMGO33	1965	IBM	R&H
AMGO34	1965	IBM	R&H
ANSYS	1972	CDC	CDC
ASHSD	1969	IBM	UCB
BASEPLATE II	1982	CDC	CDC
GENDHK 3	1969	IBM	UCB
GENSHL 2	1969	IBM	FIRL
GENSHL 5	1968	IBM	FIRL
GTSTRUDL	1979	CDC	GT
NASTRAN (MSC)	1974	CDC	CDC
SAP IV	1973	CDC	UCB
SAP IV	1974	IBM	USC
SDRC FRAME PACKAGE SAGS/DAGS	1977	CDC	SDRC
SPSTRESS	1977	CDC	CDC
STARDYNE	1977	CDC	CDC
STRESS	1970	EG	CDC
STRUDL (V2 M2)	1972	IBM	ICES
STRUDL (Rel. 2.6) (Dynal)	1974	IBM	MCAUTO
STRUDL (Rel. 4.0)	1975	IBM	MCAUTO
STRUPAK PACKAGE MAP2DF/SAP2DF	1971	CDC	TRW
SUPERB	1977	CDC	CDC

Program	Usage Start Date:Year	Hardware	Source
WELDDA	1983	CDC	CDC
WERCO	1978	CDC	AAA

All programs on IBM hardware are run under the MVS operating system, on either a 370/165 machine or a 360150 machine. All programs on CDC hardware are run under the SCOPE 3.3 operating system on a 6600 machine.

The following abbreviations are used for program sources:

CDC - Control Data Corporation, Minneapolis, MI

FIRL - Franklin Institute Research Labs, Philadelphia, PA

GT - Georgia Institute of Technology, Atlanta, GA

ICES - Integrated Civil Engineering System, Worcester, MA

MCAUTO - McDonnell-Douglas Automation Company, St. Louis, MO

R&H - Rohm & Haas Company, Huntsville, AL

SDRC - Structural Dynamics Research Corporation, Cincinnati, OH

TRW - TRW Systems Group, Redondo, CA

UCB - University of California, Berkely, CA

USC - University of Southern California, Los Angeles, CA

AAA - AAA Technology and Specialties Co., Inc., Houston, TX

(b) The following programs have been validated by comparison with a program in the public domain:

RESPONSE FOR EARTHQUAKE AVERAGING SPECTRAL RESPONSE

Summary comparisons of results for these computer programs are provided in Figures 3.8D-l and 3.8D-2.

(c) The following programs have been validated by comparison with hand calculations:

BIAXIAL BENDING - USD

CONCRETE STRESS ANALYSIS

DL42

PLTDL42

THERMCYL

TORSIONAL DYNANAL

PNA100

The following programs have been validated by comparison with analytical results published in the technical literature:

BAP222

DYNANAL

ROCKING DYNANAL

Summary comparison of results for these computer programs are provided in Tables 3.8D-l through 3.8D-10.

Table 3.8D-1 BIAXIAL BENDING - USD

Moment Capacity (FT-KIPS)			
MX		MY	
Hand Calculations	Program	Hand Calculations	Program
0	0	409	408
601	603	287	285
850	850	164	165
911	909	77	76
933	932	0	0

Comparison of hand calculations with BIAXIAL BENDING - USD for the moment capacities of a reinforced concrete section for a given direct load.

Table 3.8D-2 Concrete Stress Analysis

Concrete Compression Stress (psi)		
Hand Calculations	Program	
436.	436.	

Row No.	Steel Tensile Stress (psi)	
	Hand Calculations	Program
1	-3833	-3830
2	-2238	-2234
3	- 644	- 639
4	950	957
5	2417	2419
6	3884	3881
7	5478	5477
8	6275	6275
9	11053	11061

Comparison of hand calculations with CONCRETE STRESS ANALYSIS for reinforced concrete beam with 9 rows of steel, subject to combined load of moment and axial force.

Table 3.8D-3 Thermcyl

Dead Load (psi)	Maximum Concrete Compression Stress (psi)		Steel Tensile Stress (psi)	
	Hand Calculations	Program	Hand Calculations	Program
0	770.8	770.9	12,948.	12,950.
10	848.8	848.3	12,285.	12,290.
100	1313.	1316.	8,336.	8,311.
1000	2795.	2793.	-5,010.	-4,990.

Note: Comparison of hand calculations with Thermcyl results for stresses in reinforced concrete thin-wall cylinder with non-linear temperature distribution across wall thickness and varying dead load axial stress.

Table 3.8D-4 Torsional Dynanal

Pure Torsion Modal Frequencies		
Mode No.	Frequency (RAD./SEC.)	
	Hand Calculations	Program
1	2810	2814
2	8430	8430

Comparison of hand calculations with TORSIONAL DYNANAL results for torsional modes of vibration of a thin-walled steel half-tube.

Table 3.8D-5 DYNANAL

Modal Periods Including Effects of Flexural and Shear Deformations		
Mode No.	Period (SEC)	
	Published Results	Program
1	1.48	1.50
2	.425	.430
3	.216	.222
4	.149	.157
5	.114	.124

Comparison of DYNANAL with analytical procedure presented in Engineering Vibrations, L. S. Jacobsen and R. S. Ayre, McGraw-Hill, 1958, Chapter 10, Modal Analysis of 200 Ft. shear-wall building including effects of flexural and shear deformations.

Table 3.8D-6 Rocking Dynanal

Modal Frequencies of Lumped-Mass Shear Beam Including effects of Base Rocking		
Mode No.	Frequency (RAD./SEC.)	
	Published Results	Program
1	5.155	5.339
2	20.52	19.226

Comparison of ROCKING DYNANAL with Analytical Procedure presented in "Earthquake Stresses in Shear Buildings," M. G. Salvadori, ASCE Transactions, 1953, Paper No. 2666. Modal analysis of lumped-mass shear beam including effects of base rocking.

Table 3.8D-7 BAP222

Comparison of BAP222 with analytical procedure presented in A Simple Analysis for Eccentrically Loaded Concrete Sections, L. G. Parker and J. J. Scanion, Civil Engineering, October 1940

	Published Results	Program
Pressure bulb geometry, Z4	12 (in.)	12 (in.)
Pressure bulb geometry, Z5	6.41 (in.)	6.41 (in.)
Pressure bulb geometry, Z7	3.67 (in.)	3.36 (in.)
Concrete pressure force	-14.08 (k)	-14.48 (k)
Anchor load 1	- 1.715 (k)	- 1.65 (k)
Anchor load 2	5.34 (k)	5.4 (k)
Anchor load 3	-3.22 (k)	-3.44 (k)
Anchor load 4	3.665 (k)	3.61 (k)

Table 3.8D-8 DL42

Comparison of hand calculations with DL42 for the design of a baseplate resisting a given load.

	Hand Calculations	Program
Safety factor (0.5 SSE)	3.232	3.234
Safety factor (SSE)	3.878	3.881
Maximum plate moment	10.535 (k-in)	10.526
Effective section modulus	1.261 (in.)	1.261
Minimum plate thickness	0.417 (in.)	0.417

Table 3.8D-9 PLTDL42

Comparison of hand calculations with PLTDL42 for the design of a baseplate resisting a given load.

	Hand Calculations	Program
Safety factor (0.5 SSE)	3.232	3.234
Safety factor (SSE)	3.878	3.881
Maximum plate moment	10.535 (k-in)	10.526
Effective section modulus	1.261 (in.)	1.261
Minimum plate thickness	0.417 (in.)	0.417
Plate bending stress	8.355 (k/in)	8.348

Table 3.8D-10 PNA 100 Nozzle Stresses (PEN X-57) Next to Shell

Case	Calc. Mode	A	B	C	D
1	Program	11,039	16,588	11,224	16,495
	Hand	11,036	16,584	11,221	16,491
4	Program	13,074	19,192	12,417	17,974
	Hand	13,070	19,187	12,412	17,968
		AWAY FROM SHELL			
Case	Calc. Mode	A	B	C	D
1	Program	10,358	10,095	10,571	10,330
	Hand	10,354	10,090	10,567	10,327
4	Program	12,944	12,621	12,196	11,915
	Hand	12,939	12,616	12,190	11,908

THIS PAGE INTENTIONALLY BLANK

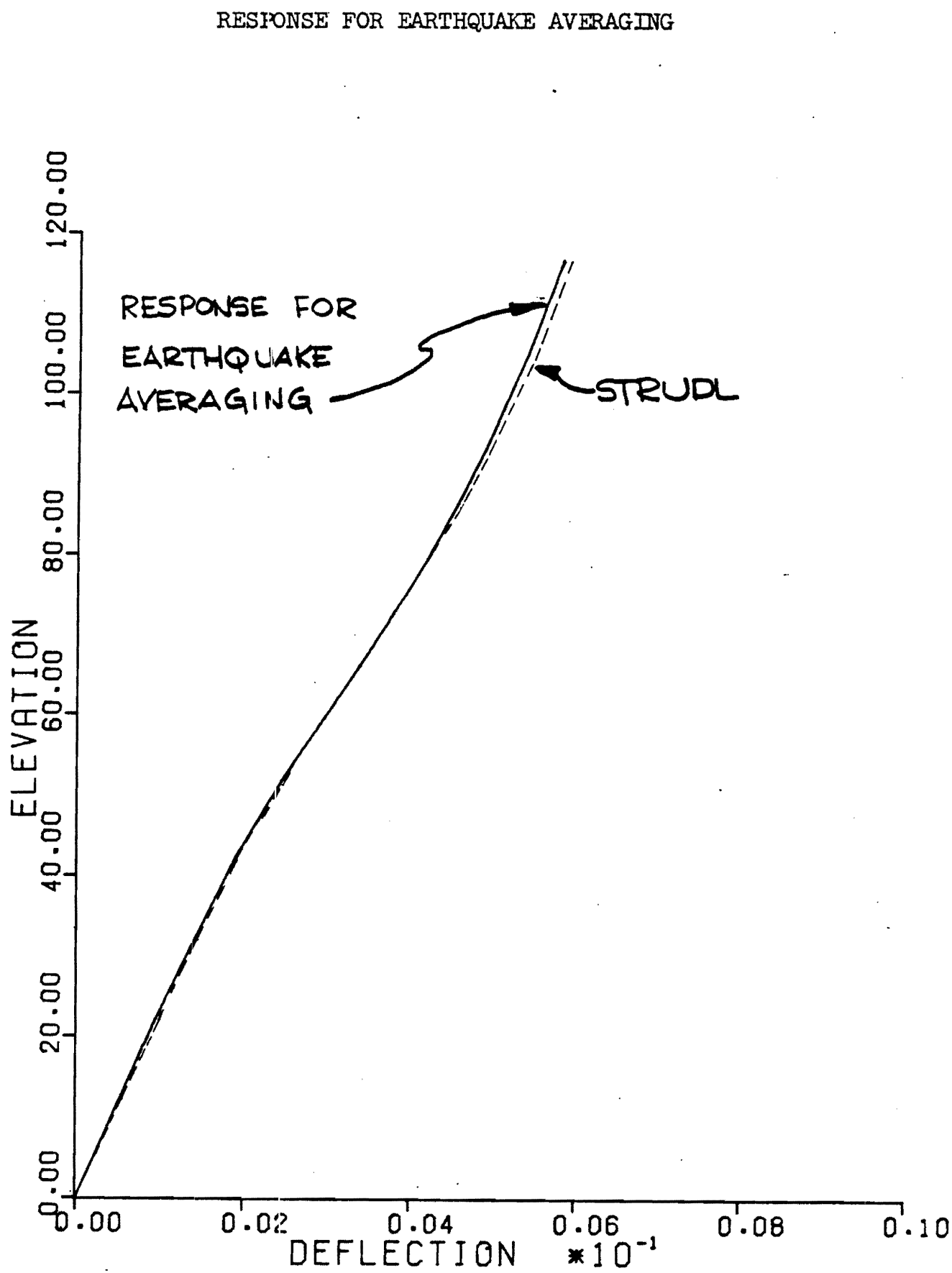

Comparison of STRUDL with RESPONSE FOR EARTHQUAKE AVERAGING for a normal-mode time-history analysis of a lumped-mass structural model of a nuclear power plant structure subjected to the 1940 El Centro earthquake N-S ground motion.

Figure 3.8D-1 Response for Earthquake Averaging

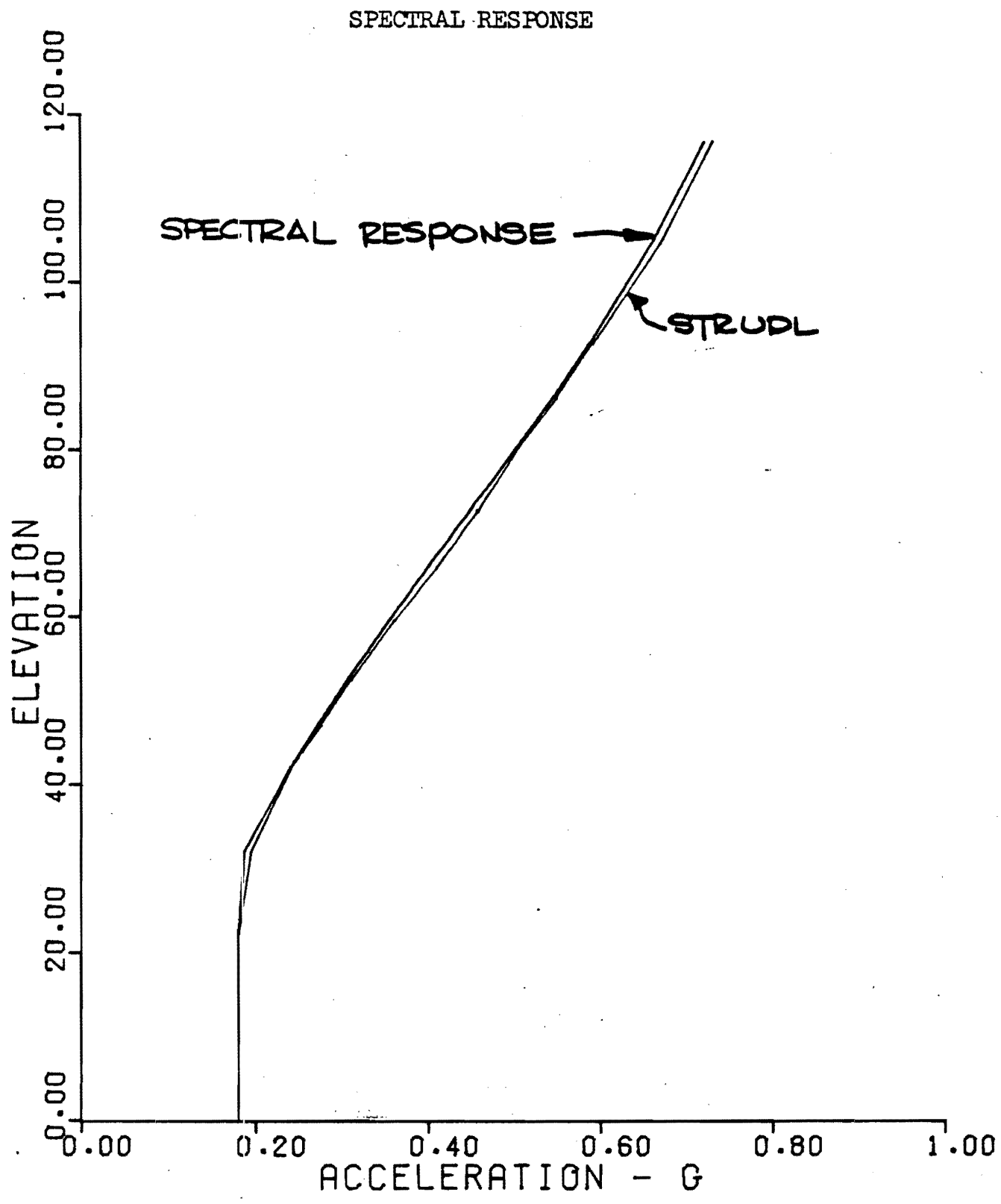

Comparison of STRUDL with SPECTRAL RESPONSE for a response spectrum analysis of a lumped-mass structural model of a nuclear power plant structure subjected to the 1940 El Centro earthquake N-S ground motion.

Figure 3.8D-2 Spectral Response

3.8E CODES, LOAD DEFINITIONS AND LOAD COMBINATIONS FOR THE MODIFICATION AND EVALUATION OF EXISTING STRUCTURES AND FOR THE DESIGN OF NEW FEATURES ADDED TO EXISTING STRUCTURES AND THE DESIGN OF STRUCTURES INITIATED AFTER JULY 1979

3.8E.1 Application Codes and Standards

(a) American Concrete Institute (ACI) 318-77, "Building Code Requirements for Reinforced Concrete"

(b) American Institute of Steel Construction (AISC), "Specification for the Design Fabrication, and Erection of Structural Steel for Buildings," 7th edition adopted February 12, 1969, as amended through June 12, 1974 or later editions, except welded construction is in accordance with Item d below.

(c) American Society for Testing and Materials (ASTM) Standards

(d) American Welding Society (AWS)

Structural Welding Code, AWS D1.1-72, with Revisions 1-73 and 2-74 except later editions may be used for prequalified joint details, base materials, and qualification of welding procedures and welders.

Visual inspection of structural welds will meet the minimum requirements of Nuclear Construction Issues Group documents NCIG-01 and NCIG-02 as specified on the design drawings or other engineering design output (See Section 3.8.4.1.1, Item 18).

(e) National Fire Protection Association Standard NFPA 13

(f) National Fire Protection Association Standard NFPA 14

(g) National Fire Protection Association Standard NFPA 15

(h) National Fire Protection Association Standard NFPA 24

(i) National Fire Protection Association Standard NFPA 30

(j) American Society of Mechanical Engineers (ASME) Boiler and Pressure Vessel Code, Sections III, VIII, and IX

(k) American Nuclear Standard Institute (ANSI) B31.1, "Power Piping"

(l) AWS D1.1-81, "Structural Welding Code"

(m) AISC-ANSI-N690-1984 "Nuclear Facilities Steel Safety-Related Structures for Design, Fabrication and Erection"

3.8E.2 Load Definitions

The following terms are used in the load combination equations for structures.

Normal loads, which are those loads to be encountered during normal plant operation and shutdown, include:

D - Dead loads or their related internal moments and forces including any permanent equipment loads; all hydrostatic loads; and earth loads applied to horizontal surfaces.

L - Live loads or their related internal moments and forces including any movable equipment loads and other loads which vary with intensity and occurrence, such as lateral soil pressure.

T_o - Thermal effects and loads during normal operating or shutdown conditions, based on the most critical transient or steady-state condition.

R_o - Pipe reactions during normal operating or shutdown conditions, based on the most critical transient or steady-state condition.

Severe environmental loads include:

E - Loads generated by the operating basis earthquake (OBE). The term "operating basis earthquake" has the same meaning as "one-half safe shutdown earthquake."

W - Load generated by the design wind specified for the plant.

Extreme environmental loads include:

E' - Load generated by the safe shutdown earthquake (SSE). The term "safe shutdown earthquake" has the same meaning as the term "design basis earthquake" (DBE).

W_t - Loads generated by the design tornado specified for the plant. Tornado loads include loads due to the tornado wind pressure, the tornado-created differential pressure, and to tornado-generated missiles.

Abnormal loads, which are those loads generated by a postulated high-energy pipe break accident, include:

P_a - Pressure equivalent static load within or across a compartment generated by the postulated break, and including an appropriate dynamic load factor to account for the dynamic nature of the load.

T_a -Thermal loads under thermal conditions generated by the postulated break and includingT_o.

R_a -Pipe reactions under thermal conditions generated by the postulated break and including R_o.

Y_r - Equivalent static load on the structure generated by the reaction on the broken high-energy pipe during the postulated break, and including an appropriate dynamic load factor to account for the dynamic nature of the load.

Y_j - Jet impingement equivalent static load on a structure generated by the postulated break, and including an appropriate dynamic load factor to account for the dynamic nature of the load.

Y_m - Missile impact equivalent static load on a structure generated by or during the postulated break, as from pipe whipping, and including an appropriate dynamic load factor to account for the dynamic nature of the load.

In determining an appropriate equivalent static load for Y_r, Y_j, and Y_m, elasto-plastic behavior may be assumed with appropriate ductility ratios, provided excessive deflections will not result in loss of function of any safety-related system.

Other loads:

C - Construction live loads

F' - Hydrostatic load from the probable maximum flood

F_a - Flood load generated by a postulated pipe break

Concrete capacity:

U - Concrete section strength required to resist design loads based on the strength design methods described in ACI 318-77.

3.8E.3 Load Combinations - Concrete

For service load conditions, the strength design method is used, and the following load combinations are considered.

(1) U = 1.4 D + 1.7 L

(2) U = 1.4 D + 1.7 L + 1.9 E

(3) U = 1.4 D + 1.7 L + 1.7 W

If thermal stressses due to T_o and R_o are present, the following combinations are also considered.

(1a) $U = (0.75)\ (1.4\ D + 1.7\ L + 1.7\ T_o + 1.7\ R_o)$

(2a) $U = (0.75)\ (1.4\ D + 1.7\ L + 1.9\ E + 1.7\ T_o + 1.7\ R_o)$

(3a) $U = (0.75)\ (1.4\ D + 1.7\ L + 1.7\ W + 1.7\ T_o + 1.7\ R_o)$

Both cases of L having its full value or being completely absent are checked. In addition, the following combinations are considered:

(2a') $U = 1.2\ D + 1.9\ E$

(3a') $U = 1.2\ D + 1.7\ W$

(b) For factored load conditions, which represent extreme environmental, abnormal, abnormal/severe environmental and abnormal/extreme environmental conditions, the strength design method is used; and the following load combinations are considered:

(4) $U = D + L + T_o + R_o + E'$

(5) $U = D + L + T_o + R_o + W_t$

(6) $U = D + L + T_a + R_a + 1.5\ P_a$

(7) $U = D + L + T_a + R_a + 1.25\ P_a + 1.0\ (Y_r + Y_j + Y_m) + 1.25\ E$

(8) $U = D + L + T_a + R_a + 1.0\ P_a + 1.0\ (Y_r + Y_j + Y_m) + 1.0\ E'$

For the Additional Diesel Generator Building and structures initiated after July 1979, the three individual tornado-generated loads are combined as follows:

$W_t = W_w$

$W_t = W_p$

$W_t = W_m$

$W_t = W_w + 0.5W_p$

$W_t = W_w + W_m$

$W_t = W_w + 0.5\ W_p + W_m$

where:

W_t is the total tornado load,

W_w is the tornado wind load,

W_p is the tornado-generated pressure differential load, and

W_m is the tornado missile load.

In combinations (6), (7), and (8), the maximum values of P_a, T_a, R_a, Y_j, Y_r, and Y_m, including an appropriate dynamic load factor, is used unless a time-history analysis is performed to justify otherwise. Combinations (5), (7), and (8), are satisfied first without the tornado missile load in (5) and without Y_r, Y_j, and Y_m in (7) and (8). When considering these concentrated loads, local section strength capacities may be exceeded provided there is no loss of function of any safety-related system.

(c) Other load conditions:

(9) $U = 1.4\ D + 1.4\ C$

(10) $U = D + L + F'$

(11) $U = D + F_a$

3.8E.4 Load Combinations - Structural Steel

(a) For service load conditions, the elastic working stress design methods of Part 1 of the AISC specifications is used and the following load combinations are considered.

	Allowable Stress	Load Combinations
(1)	AISC Allowable*	D + L
(2)	AISC Allowable*	D + L + E
(3)	AISC Allowable*	D + L + W

*See Table 3.8E-1 for limiting values

If thermal stresses due to T_o and R_o are present, the following combinations are also considered:

	Allowable Stress	Load Combinations
(1a)	1.5 x AISC Allowable*	$D + L + T_o + R_o$
(2a)	1.5 x AISC Allowable*	$D + L + T_o + R_o + E$
(3a)	1.5 x AISC Allowable*	$D + L + T_o + R_o + W$

* The allowable stress shall be limited to the values given in Table 3.8E-1.

Both cases of L having its full value or being completely absent, are checked.

(b) For factored load conditions, the following load combinations are considered.

	Allowable Stress	Load Combinations
(4)	1.6 x AISC Allowable*	$D + L + T_o + R_o + E'$
(5)	1.6 X AISC Allowable*	$D + L + T_o + R_o + W_t$
(6)	1.6 x AISC Allowable*	$D + L + T_a + R_a + P_a$
(7)	1.6 x AISC Allowable*	$D + L + T_a + R_a + P_a + 1.0 (Y_j + Y_r + Y_m) + E$

	Allowable Stress	Load Combinations
(8)	1.7 x AISC Allowable*	$D + L + T_a + R_a + P_a + 1.0 (Y_j + Y_r + Y_m) + E'$
(9)	1.6 x AISC Allowable*	$D + F_a$
(10)	1.6 x AISC Allowable*	$D + L + E'$
(11)	1.6 x AISC Allowable*	$D + L + W_t$

* If thermal loads are not present, the allowable stress shall be limited to the values given in Table 3.8E-1.

Evaluations of miscellaneous and structural steel designed prior to July 1979, may be performed using load combinations (2), (10), and (11) unless other specific loads of a significant nature exist, in which case, the appropriate load combinations of Section 3.8E.4 must be considered. The design of modifications must meet the load combinations in Section 3.8E.4.

Thermal analyses using linear elastic methods are performed for restrained Category I structures located in high temperature environments.

In combinations (6), (7), and (8), the maximum values of P_a, R_a, T_a, Y_j, Y_r, and Y_m, including an appropriate dynamic load factor, was used unless a time-history analysis was performed to justify otherwise. Combinations (5), (7), and (8) were first satisfied without the tornado missile load in (5) and without Y_r, Y_j, and Y_m in (7) and (8).

Table 3.8E-1
(Sheet 1 of 2)
LIMITING VALUES OF ALLOWABLE STRESS

Loading Combinations	Tension on Net Section	Sheer on Gross Section	Compression on Section	Bending
(1), (2), (3)	$0.60F_y$	$0.40F_y$	See Note 1	See Note 2
(1a), (2a), (3a)	$0.90F_y$	$\frac{0.90F_y}{\sqrt{3}}$	See Note 3	$0.90F_y$
(4) through (9)				

Note 1 - Varies with slenderness ratio, see AISC "Manual of Steel Construction," 7th Edition, Table 1-36, Page 5-84.

Note 2 - Varies, see Section 1.5.1.4, "Bending", of Item 3.8E.1.b

Note 3 - Varies with slenderness ratio. The allowable stress was obtained from AISC Specification Section 1.5, using formula 1.5-1 or 1.5-2 and 1.5-3 with modifications, as shown below:

Main and secondary members

$$Kl/r \le C_c:\ F_a = 0.9F_y\left[1 - \frac{\left(\frac{Kl}{r}\right)^2}{2C_c^2}\right] \text{(Formula A)}$$

Main members

$$C_c < Kl/r < 200:\ F_a = \frac{0.9\pi^2 E}{\left(\frac{Kl}{r}\right)^2} \text{ (Formula B)}$$

Secondary members

$$120 < Kl/r \le 200:\ F_{as} = \frac{F_a[\text{by Formula (A) or (B)}]}{1.6 - \frac{1}{200r}}$$

Where:

$$C_c = \sqrt{\frac{2\pi^2 E}{F_y}}$$

E = Modulus of elasticity of steel

Table 3.8E-1
(Sheet 2 of 2)
LIMITING VALUES OF ALLOWABLE STRESS

F_a = Axial compressive stress permitted in the absence of bending moment (kips per square inch)

F_{as} = Axial compressive stress, permitted in the absence of bending moment, for bracing and other secondary members (kips per square inch)

F_y = Specified minimum yield stress of materials (kips per square inch)

K = Effective length factor

l = Actual unbraced length (inches)

r = Governing radius of gyration (inches)

3.9 MECHANICAL SYSTEMS AND COMPONENTS

3.9.1 General Topic for Analysis of Seismic Category I ASME Code and Non-Code Items

3.9.1.1 Design Transients

Transients used in the design and fatigue analysis for Westinghouse supplied ASME Code Class 1 components and CS components are discussed and presented in Section 5.2.1.5. Specifically, the transients are identified for Class 1 components in Tables 5.2-2 and 5.2-3. The transients used in the design and analysis of RCS components are identified in Table 5.2-2.

3.9.1.2 Computer Programs Used in Analysis and Design

3.9.1.2.1 Other Than NSSS Systems, Components, Equipment, and Supports

(1) The following computer programs are used in piping analyses:

(a) TPIPE Program - TPIPE is a special purpose computer program capable of performing static and dynamic linear elastic analyses of power-related piping systems. The dynamic analysis option includes: (1) frequency extraction, (2) response spectrum, (3) time history modal superposition, and (4) time history direct integration methods.

In addition to these basic analysis capabilities, the program can perform an ASME Section III, Class 1, 2, or 3 stress evaluation and perform thermal transient heat analysis to provide the linear thermal gradient, $\Delta T1$, nonlinear thermal gradient, $\Delta T2$, and gross discontinuity expansion difference, $\alpha_a T_a - \alpha_b T_b$, required for a Class 1 stress evaluation.

This program is owned and maintained by TVA. It has been fully verified and documented and was compared with PISOL, SAP IV, PIPSD, STARDYNE, and SUPERPIPE with excellent correlation. These programs are well recognized and utilized throughout the industry. It is maintained and updates are verified in accordance with the TVA Quality Assurance Program for Computer Software.

(b) Post Processors - The post processors are used in performing the stress evaluations and support load calculations made in the analysis of piping systems.

The programs use moment, force, and deflection data generated by TPIPE. A stress evaluation is made for each joint on the analysis model. The appropriate stress intensifications/stress indices according to the ASME Section III code are utilized in evaluating stresses for the Normal, Upset, Emergency, and Faulted Conditions. Pipe rupture limits and active valve limits are also evaluated. The allowed stress

difference for pipe lug attachments and the lug load is calculated for each load condition.

Support and anchor design loads are calculated for each support to meet the requirements given in Section 3.9.3.4.2.

(c) The following computer programs are also used for piping analysis:

Program	Source	Program Description
ME-101	BECHTEL	Linear elastic analysis of piping systems - Bechtel Western Power Corp San Francisco, CA.
ANSYS	SWANSON	General purpose finite element program – Swanson Analysis Systems, Inc. Houston, PA.

(2) The following computer programs are used in support design and equipment/component analysis.

ACRONYM	PROGRAM DESCRIPTION
FAPPS (ME150)	Frame Analysis For Pipe Supports
SMAPPS (ME152)	Standard Frame Analysis For Small Bore Pipe Supports
MAPPS (ME153)	Miscellaneous Applications For Pipe Supports
IAP	Integral Welded Attachments
CONAN	Allowable Tensile Load For Anchor Bolt Group With Shear Cone Overlap
BASEPLATE II	Finite Element Analysis Of Base Plates And Anchor Bolts
GT STRUDL	Structural Analysis Program
CASD	TVA Computer Aided Support Design Program
SUPERSAP	Structural Finite Element Analysis Program
ANSYS	Structural Finite Element Analysis Program
STARDYNE	Structural Analysis Program

3.9.1.2.2 Programs Used for Category I Components of NSSS

Computer programs that Westinghouse uses in analysis to determine structural and functional integrity of Seismic Category I systems, components, equipment and supports are presented in WCAP-8252, Revision 1 [1] and WCAP-8929 [10].

3.9.1.3 Experimental Stress Analysis

No experimental stress analysis was used per se, for the reactor internals. However, Westinghouse makes extensive use of measured results from prototype plants and various scale model tests as discussed in the following Sections 3.9.2.4, 3.9.2.5, and 3.9.2.6.

3.9.1.4 Consideration for the Evaluation of the Faulted Condition

3.9.1.4.1 Subsystems and Components Analyzed by Westinghouse

The analytical methods used to evaluate stresses for ASME Class 1 systems and components are presented in Section 5.2.1.10. The results of the analyses are documented in the stress reports that describe the system or component.

For reactor internals the faulted condition was evaluated based on a non-linear elastic system analysis and conforms to the requirements of Appendix F of the ASME Code Section III. Analytical methods are described in Section 3.9.2.5.

3.9.1.4.2 Subsystems and Components Analyzed by TVA

(1) Piping Systems - The methods employed in the analysis of ASME Class 1 and Class 2/3 piping systems are elastic analytical methods as described by the equations of Sections NB-3600 and NC-3600 of the ASME Code.

The faulted condition stress limits specified for Class 1 and Class 2/3 systems are in compliance with the elastic method limits set forth in Appendix F subsection F-1360 of the ASME Section III Code.

(2) Piping System Supports - The methods employed in the analysis of ASME Code Classes 1, 2, and 3 piping system supports are as follows:

Linear Type - Elastic methods as described by Part I of the AISC, "Specification for the Design, Fabrication, and Erection of Structural Steel for Buildings," February 12, 1969. (Supplements 1, 2, & 3) (*Later edition of the AISC code may be utilized when design safety is not compromised.)

(a) Standard Components - Elastic or load-rated methods as described by Manufacturers' Standardization Society (MSS) SP-58, 1967 edition, "Pipe Hangers and Supports."

The faulted condition stress limits for Class 1, 2, and 3 pipe supports are specified in Section 3.9.3.4.2. For linear supports these faulted

condition limits meet the intent and requirements of the elastic method limits set forth in Appendix F, subsection F-1320 or F-1370, of the ASME Section III Code. See Section 3.9.3.4.2. For standard components, the allowable stresses or load ratings of MSS-SP-58 are based on a factor of safety of five based on normal operating conditions. Upset, emergency, faulted, and test conditions were evaluated using Table 3.9-21. This low allowable stress is adequate to assure that active components are properly supported for faulted conditions.

(3) Mechanical Equipment

No plastic instability allowable limits given in ASME Section III have been used when dynamic analysis is performed. The limit analysis methods have the limits established by ASME Section III for Normal, Upset and Emergency Conditions. For these cases, the limits are sufficiently low to assure that the elastic system analysis is not invalidated. For ASME Code Class 1 mechanical equipment, the stress limits for faulted loading conditions are specified in Sections 3.9.3.1.2 and 5.2. For ASME Code Class 2 and 3 mechanical equipment the stress limits for faulted loading conditions are specified in Section 3.9.3.1.2. These faulted condition limits are established in such a manner that there is equivalence with the adopted elastic system analysis. Particular cases of concern are checked by readjusting the elastic system analysis.

(4) Mechanical Equipment Supports

The stress limits for the faulted loading condition of mechanical equipment supports are given in Section 3.9.3.4.1 of Westinghouse's scope of supply, and Section 3.9.3.4.2 for TVA's scope of supply.

3.9.2 Dynamic Testing and Analysis

3.9.2.1 Preoperational Vibration and Dynamic Effects Testing on Piping

ASME Code Section III, Subparagraph NB-3622.3, "Vibration," requires that vibration effects in piping systems shall be visually observed and where questionable shall be measured and corrected as necessary.

The preoperational piping dynamic effects test program at this plant is as follows:

(a) The dynamic (steady state and transient) behavior of safety related piping systems designated as ASME Class 1, 2, and 3 is observed during the preoperational testing program. Sample and instrument lines beyond the root valves are normally not included. Also included

in the program are those portions of ANSI B31.1 piping which has a potential to exhibit excessive vibrations.

(b) Preoperational tests involving critical piping systems will be in compliance with Regulatory Guide 1.68, "Preoperational and Initial Startup Test Programs for Water-Cooled Power Reactors."

(c) For the piping systems discussed in Item a., visual observation of the piping will be performed by trained personnel during predetermined, steady-state and transient modes of operation. The maximum point(s) of representative vibration, as determined by the visual observation, will be instrumented and measurement will be taken to determine actual magnitudes, if it is judged to be excessive.

(d) The allowable criteria for measurements shall be either a maximum half-amplitude displacement or velocity value based on an endurance limit stress as defined in the ASME B&PV Code (refer to Section 3.7.3.8.1).

(e) Should the measured magnitudes actually exceed the allowable, corrective measures will be performed for the piping system. Any new restraints, as required by corrective measures, will be incorporated into the piping system analysis.

(f) The flow mode which produced the excessive vibrations will be repeated to assure that vibrations have been reduced to an acceptable level.

(g) The flow modes to which the system components will be subjected are defined, in general terms, in the preoperational test program.

(h) Vibration measurements will also be taken on the vital pumps at baseline and on a periodic basis so that excessive vibration can be corrected early in the program and/or detected if it gradually becomes a problem.

(i) Vibrations of the affected portions of the main steam system during MS isolation valve trip will be tested and the results will be evaluated.

(j) Thermal expansion tests will be conducted on the following piping systems:

- Reactor Coolant System
- Main Steam
- Steam Supply to Auxiliary Feedwater Pump Turbine
- Main Feedwater

- Pressurizer Relief Line
- RHR in Shutdown Cooling Mode
- Steam Generator Blowdown
- Safety Injection System (those lines adjoining RCS which experience temperature > 200°F)
- Auxiliary Feedwater
- CVCS (Charging line from Regen. Hx to RCS, Letdown Line from RCS to Letdown Hx)

During the thermal expansion test, pipe deflections will be measured or observed at various locations based on the location of snubbers and hangers and expected large displacement. One complete thermal cycle (i.e., cold position to hot position to cold position) will be monitored. For most systems, the thermal expansion will be monitored at cold conditions and at normal operating temperature. Intermediate temperatures are generally not practical due to the short time during which the normal operating temperature is reached. For the reactor coolant system and the main steam system, measurements will be made at cold, 250°F, 350°F, 450°F and normal operating temperatures.

Acceptance criteria for the thermal expansion test verify that the piping system is free to expand thermally (i.e., piping does not bind or lock at spring hangers and snubbers nor interfere with structures or other piping), and to confirm that piping displacements do not exceed design limits, as described by ASME Section III (i.e., the induced stresses do not exceed the sum of the basic material allowable stress at design temperature and the allowable stress range for expansion stresses).

If thermal motion is not as predicted, the support system will be examined to verify correct function or to locate points of binding of restraints. If binding is found, the restraints will be adjusted to eliminate the unacceptable condition or reanalyzed to verify that the existing condition is acceptable.

3.9.2.2 Seismic Qualification Testing of Safety-Related Mechanical Equipment

Design of Category I mechanical equipment to withstand seismic, accident, and operational vibratory loadings is provided either by analysis or dynamic testing.

Generally tests are run with either of the following two objectives:

(1) To obtain information on parts or systems necessary to perform the required analysis, or

(2) To prove the design (stress or operability) adequacy of a given equipment or structure without performing any analysis of this particular equipment or structure.

The need for the first type of tests is dictated by lack of information on some of the inputs vital to the performance of an analysis. These tests can be either static (to obtain spring constants) or dynamic (to obtain impedance characteristics).

The need for the second type of test is mainly dictated by the complexity of the structure/equipment under design. This vibration testing is usually performed in a laboratory or shop on a prototype basis, using various sources of energy.

For general seismic qualification requirements for mechanical and electrical equipment, see Section 3.7.3.16.

Laboratory vibration testing can be conducted by employing various forms of shakers, the variation depending on the source of the driving force. Generally, the primary source of motion may be electromagnetic, mechanical, or hydraulic-pneumatic. Each is subject to inherent limitations which usually dictate the choice.

To properly simulate the seismic disturbance, the waveform must be carefully defined. The waveform seen by a given piece of equipment depends on:

(1) The earthquake motion specified for a given site.

(2) The soil-structure interaction.

(3) The building in which the component is housed.

(4) The floor on which the equipment is located.

(5) The support and attachments to the equipment.

Components located on rocks or on stiff lower floors of buildings founded on rock are subjected to random-type vibrations. Components located on the upper floors of flexible buildings, in flexible subsystems, or in buildings on soft foundations are roughly subjected to sine beats with a frequency close to fundamental frequency of the building or subsystem.

In cases where random vibration inputs are used, extreme care is paid to the selection of random forcing functions having frequency content and energy conservatively approaching those of the ground or buildings motion caused by the specified earthquake(s).

The most common and readily available vibration testing facilities could only carry simple harmonic motion. By analytical comparison with time history response obtained with a number of real earthquake motions, it has been found that these time histories can be approximately simulated with wave forms having the shape of sine beats with 5 or 10 cycles per beat, a frequency equal to the component natural frequencies, and

maximum amplitude equal to the maximum seismic acceleration to which the component needs to be qualified. For equipment located on building floors, the maximum seismic input acceleration is the maximum floor acceleration. This is obtained from the dynamic analysis of the building or from the appropriate floor response spectrum at the zero period of the equipment.

The above procedure adheres closely to the IEEE 344-1971 "IEEE Guide for Seismic Qualification of Class 1 Electric Equipment for Nuclear Power Generating Stations." This standard was specified for equipment for the Watts Bar Nuclear Plant contracted for up to September 1, 1974. New contracts after this date specified IEEE 344-1975 "IEEE Recommended Practices for Seismic Qualification of Class 1E Equipment for Nuclear Power Generating Stations." The first test to the IEEE 344-1975 was run in March 1974 on 6.9 kV switch gear. On local panels, test qualification to both standards was used because some instruments and controls mounted there on were procured to each version. This one test revealed that the 1971 version of IEEE 344 was the more severe.

As an example, seismic qualification and the demonstration of operability of active Class 2 and 3 pumps, active Class 1, 2, or 3 valves, and their respective drives, operators and vital auxiliary equipment is shown by satisfying the criteria given in Section 3.9.3.2. Other active mechanical equipment will be shown operable by either testing, analysis or a combination of testing and analysis. The operability programs implemented on this other active equipment will be similar to the program described in Section 3.9.3.2 for pumps and valves. Testing procedures similar to the procedures outlined in Section 3.10 for electrical equipment will be used to demonstrate operability if the component is mechanically or structurally complex such that its response cannot be adequately predicted analytically. Analysis may be used if the equipment is amenable to modeling and dynamic analysis.

Inactive Seismic Category I equipment will be shown to have structural integrity during all plant conditions in one of the following manners: 1) by analysis satisfying the stress criteria applicable to the particular piece of equipment, or 2) by test showing that the equipment retains its structural integrity under the simulated seismic environment.

A list of Category I mechanical equipment and the original method of qualification is provided in the Table 3.7-25.

3.9.2.3 Dynamic Response Analysis of Reactor Internals Under Operational Flow Transients and Steady-State Conditions

The vibration characteristics and behavior due to flow induced excitation are very complex and not readily ascertained by analytical means alone. Reactor components are excited by the flowing coolant which causes oscillatory pressures on the surfaces. The integration of these pressures over the applied area should provide the forcing functions to be used in the dynamic analysis of the structures. In view of the complexity of the geometries and the random character of the pressure oscillations, a closed form solution of the vibratory problem by integration of the differential equation of motion is not always practical and realistic. Therefore, the determination of the forcing functions as a direct correlation of pressure oscillations can not be practically performed

independently of the dynamic characteristics of the structure. The main objective, then, is to establish the characteristics of the forcing functions that essentially determine the response of the structures. By studying the dynamic properties of the structure from previous analytical and experimental work, the characteristics of the forcing function can be deduced. These studies indicate that the most important forcing functions are flow turbulence, and pump-related excitation. The relevance of such excitations depends on many factors such as type and location of component and flow conditions.

The effects of these forcing functions have been studied from test runs on models, prototype plants and in component tests [2,4,5].

The Indian Point Unit 2 plant has been established as the prototype for four-loop plant internals verification program and was fully instrumented and tested during initial startup [4]. In addition, the Sequoyah Unit 1 and Trojan Nuclear Plants have also been instrumented to provide prototype data applicable to Watts Bar [5].

Although the Watts Bar plant is similar to Indian Point Unit 2, significant differences are the modifications resulting from the use of 17 x 17 fuel, the replacement of the annular thermal shield with neutron shielding panels, and reactor vessel barrel/baffle upflow flow design. These differences are addressed below.

(1) 17 x 17 Fuel

The only structural changes in the internals resulting from the design change from the 15 x 15 to the 17 x 17 fuel assembly are the guide tube and control rod drive line. The new 17 x 17 guide tubes are stronger and more rigid, hence they are less susceptible to flow induced vibration. The fuel assembly itself is relatively unchanged in mass and spring rate, and thus no significant deviation is expected from the 15 x 15 fuel assembly vibration characteristics.

(2) Neutron Shielding Pads Lower Internals

The primary cause of core barrel excitation is flow turbulence, which is not affected by the upper internals [3]. The vibration levels due to core barrel excitation for Trojan and Watts Bar both having neutron shielding pads, are expected to be similar. Since Watts Bar has greater velocities than Trojan, vibration levels due to the core barrel excitation is expected to be somewhat greater than that for Trojan (proportional to flow velocity raised to a small power). However, scale model test results and preliminary results from Trojan show that core barrel vibration of plants with neutron shielding pads is significantly less than that of plants with thermal shields. This information and the fact that low core barrel flange stresses with large safety margins were measured at Indian Point Unit 2 (thermal shield configuration) lead to the conclusion that stresses approximately equal to those of Indian Point Unit 2 will result on the Watts Bar internals with the attendant large safety margins.

(3) Reactor Vessel Barrel/Baffle Upflow Conversion

The upflow conversion consists of changes to the reactor vessel components, which are to plug the core barrel inlet flow holes and to provide holes in the top former plate. These modifications change the flow path from being downflow to upflow between the core barrel and the baffle plate and increase core bypass flow by 1.5%. Changing the flow path reduces the pressure differential across the baffle plate, eliminating the jetting of coolant between the joints between the baffle plates. Although defined as a difference between Indian Point 2 and Watts Bar internals, the conversion of the Watts Bar internals to the upflow configuration has no direct impact on the reactor core system under earthquake conditions. Therefore, the fuel assembly structural integrity during a seismic event is not affected by the modification. The potential effects due to the LOCA contribution, as a result of the upflow modification, has been demonstrated by evaluation that the impact of the change in forces from the initial downflow design to upflow are insignificant. Therefore, the modifications associated with the upflow conversion do not increase the seismic or LOCA induced loads significantly compared to that of the downflow design, and the fuel assembly structural integrity and coolable geometry are maintained. This issue has been reviewed and approved by the NRC [11 & 12].

3.9.2.4 Preoperational Flow-Induced Vibration Testing of Reactor Internals

Because the Watts Bar reactor internals design configuration is well characterized, as was discussed in Section 3.9.2.3, it is not considered necessary to conduct instrumented tests of the Watts Bar plant hardware. The requirements of Regulatory Guide 1.20 will be met by conducting the confirmatory preoperational testing examination for integrity per Paragraph D, of Regulatory Guide 1.20, "Regulation for Reactor Internals Similar to the Prototype Design." This examination will include some 35 points (Figure 3.9-1) with special emphasis on the following areas.

(1) All major load-bearing elements of the reactor internals relied upon to retain the core structure in place.

(2) The lateral, vertical and torsional restraints provided within the vessel.

(3) Those locking and bolting devices whose failure could adversely affect the structural integrity of the internals.

(4) Those other locations on the reactor internal components which are similar to those which were examined on the prototype Indian Point Unit 2 design.

(5) The inside of the vessel will be inspected before and after the hot functional test, with all the internals removed, to verify that no loose parts or foreign material are in evidence.

A particularly close inspection will be made on the following items or areas using a 5X or 10X magnifying glass or penetrant testing where applicable.

(1) Lower Internals

(a) Upper barrel to flange girth weld.

(b) Upper barrel to lower barrel girth weld.

(c) Upper core plate aligning pin. Examine bearing surfaces for any shadow marks, burnishing, buffing or scoring. Inspect welds for integrity.

(d) Irradiation specimen guide screw locking devices and dowel pins. Check for lockweld integrity.

(e) Baffle assembly locking devices. Check for lockweld integrity.

(f) Lower barrel to core support girth weld.

(g) Neutron shield panel screw locking devices and dowel pin cover plate welds. Examine the interface surfaces for evidence of tightness and for lockweld integrity.

(h) Radial support key welds.

(i) Insert screw locking devices. Examine soundness of lockwelds.

(j) Core support columns and instrumentation guide tubes. Check the joints for tightness and soundness of the locking devices.

(k) Secondary core support assembly screw locking devices for lockweld integrity.

(l) Lower radial support keys and inserts. Examine for any shadow marks, burnishing, buffing or scoring. Check the integrity of the lockwelds. These members supply the radial and torsional constraint of the internals at the bottom relative to the reactor vessel while permitting axial and radial growth between the two. One would expect to see, on the bearing surfaces of the key and keyway, burnishing, buffing or shadow marks which would indicate pressure loading and relative motion between the two parts. Some scoring of engaging surfaces is also possible and acceptable.

(m) Gaps at baffle joints. Check for gaps between baffle and top former and at baffle to baffle joints.

(2) Upper Internals

(a) Thermocouple conduits, clamps and couplings.

(b) Guide tube, support column, orifice plate, and thermocouple assembly locking devices.

(c) Support column and thermocouple conduit assembly clamp welds.

(d) Upper core plate alignment inserts. Examine for any shadow marks, burnishing, buffing or scoring. Check the locking devices for integrity of lockwelds.

(e) Thermocouple conduit gusset and clamp welds (where applicable).

(f) Thermocouple conduit end-plugs. Check for tightness.

(g) Guide tube enclosure welds, tube-transition plate welds and card welds.

Acceptance standards are the same as required in the shop by the original design drawings and specifications.

During the hot functional test, the internals will be subjected to a total operating time at greater than normal full-flow conditions (four pumps operating) of at least 240 hours. This provides a cyclic loading of approximately 10^7 cycles on the main structural elements of the internals. In addition there will be some operating time with only one, two and three pumps operating.

When no signs of abnormal wear, no harmful vibrations are detected and no apparent structural changes take place, the four-loop core support structures are considered to be structurally adequate and sound for operation.

3.9.2.5 Dynamic System Analysis of the Reactor Internals Under Faulted Conditions

3.9.2.5.1 Design Criteria

The basic requirement of any LOCA including the double-ended severance of a reactor coolant pipe, is that sufficient integrity be maintained to permit the safe and orderly shutdown of the reactor. This implies that the core must remain essentially intact and the deformations of the internals must be sufficiently small so that primary loop flow, and particularly, adequate safety injection flow, is not impeded. The ability to insert control rods, to the extent necessary, to provide shutdown following the accident must be maintained. Maximum allowable deflection limitations are established for those regions of the internals that are critical for plant shutdown. The allowable and no loss of function deflection limits under dead weight loads plus the maximum potential earthquake and/or blowdown excitation loads are presented in Table 3.9-5. These limits have been established by correlating experimental and analytical results.

With the acceptance of Leak-Before Break by NRC, References [6][7][8][9][10][11] and [12] of Section 3.6B.1, the dynamic effects of main coolant loop piping are no longer considered in the design basis analysis. Only the dynamic effects of the next most limiting breaks of auxiliary lines need to be considered; and consequently the components will experience considerably less loads and deformations than those from the main loop line breaks.

3.9.2.5.2 Internals Evaluation

The horizontal and vertical forces exerted on reactor internals and the core, following a LOCA, are computed by employing the MULTIFLEX 3.0, which is an enhancement and extension of MULTIFLEX 1.0,[14] NRC reviewed and approved computer code developed for the space-time dependent analysis of nuclear power plants. MULTIFLEX 3.0 has been accepted by NRC for several other applications[15], [16], [17], [18] and also has been extensively used for the LOCA analyses of reactor internals components of numerous other 2, 3, and 4 loop nuclear power plants.

3.9.2.5.3 LOCA Forces Analysis

MULTIFLEX[14] is a digital computer program for calculation of pressure, velocity, and force transients in reactor primary coolant systems during the subcooled, transition, and early saturation portion of blowdown caused by a LOCA. During this phase of the accident, large amplitude rarefaction waves are propagated through the system with the velocity of sound causing large differences in local pressures. As local pressures drop below saturation, causing formation of steam, the amplitudes and velocities of these waves drastically decrease. Therefore, the largest forces across the reactor internals due to wave propagation occur during the subcooled portions of the blowdown transient. MULTIFLEX includes mechanical structure models and their interaction with the thermal-hydraulic system.

MULTIFLEX Code

The thermal-hydraulic portion of MULTIFLEX is based on the one dimensional homogeneous flow model which is expressed as a set of mass, momentum, and energy conservation equations. These equations are quasi-linear first order partial-differential equations that are solved by the method of characteristics. The numerical method employed is the explicit scheme; consequently time steps for stable numerical integration are restricted by sonic propagation.

In MULTIFLEX, the structural walls surrounding a hydraulic path may deviate from their neutral positions depending on the force differential on the wall. The wall displacements are represented by those of one-dimensional mass points which are described by the mechanical equations of vibration.

MULTIFLEX is a generalized program for analyzing and evaluating thermal-hydraulic-structure system dynamics. The thermal-hydraulic system is modeled with an equivalent pipe network consisting of one-dimensional hydraulic legs which define the actual system geometry. The actual system parameters of length, area, and volume are represented with the pipe network.

MULTIFLEX computes the pressure response of a system during a decompression transient. The asymmetric pressure field in the down-comer annulus region of a PWR can be calculated. This pressure field is integrated over the core support barrel area to obtain total dynamic load on the core support barrel. The pressure distributions computed by MULTIFLEX can also be used to evaluate the reactor core assembly and other primary coolant loop component support integrity.

MULTIFLEX evaluates the pressure and velocity transients for locations throughout the system. The pressure and velocity transients are made available to the programs LATFORC and FORCE-2 (described in Reference [14], Appendix A and B), which used detailed geometric descriptions to evaluate hydraulic loading on reactor internals.

Horizontal/Lateral Forces - LATFORC

LATFORC, described in Reference [14], Appendix A, calculates the lateral hydraulic loads on the reactor vessel wall, core barrel, and thermal shield, resulting from a postulated LOCA in the primary RCS. A variation of the fluid pressure distribution in the down-comer annulus region during the blowdown transient produces significant asymmetrical loading on the reactor vessel internals. The LATFORC computer code is used in conjunction with MULTIFLEX, which provides the transient pressures, mass velocities, and other thermodynamic properties as a function of time.

Vertical Forces - FORCE-2

FORCE-2, described in Reference [14], Appendix B, determines the vertical hydraulic loads on the reactor vessel internals. Each reactor component for which force calculations are required is designated as an element and assigned an element number. Forces acting upon each of the elements are calculated summing the effects of:

(1) The pressure differential across the element.

(2) Flow stagnation on, and unrecovered orifice losses across, the element.

(3) Friction losses along the element.

Input to the code, in addition to the MULTIFLEX pressure and velocity transients, includes the effective area of each element on which acts the force due to the pressure differential across the element, a coefficient to account for flow stagnation and unrecovered orifice losses, and the total area of the element along which the shear forces act.

3.9.2.5.4 Structural Response of Reactor Internals During LOCA and Seismic Conditions

Structural Model and Methods of Analysis

The response of reactor vessel internals due to an excitation produced by a complete severance of auxiliary loop piping is analyzed. With the acceptance of Leak-Before-Break (LBB) by NRC, Reference [12] of Section 3.6B.1, the dynamic effects of main

coolant loop piping no longer have to be considered in the design basis analysis. Only the dynamic effects of the next most limiting breaks of auxiliary lines need to be considered; and consequently the components will experience considerably less loads than those from the main loop line breaks.

Assuming that such a pipe break in cold leg occurs in a very short period of time (1 ms), the rapid drop of pressure at the break produces a disturbance that propagates through the reactor vessel nozzle into the down-comer (vessel and barrel annulus) and excites the reactor vessel and the reactor internals. The characteristics of the hydraulic excitation combined with those of the structures affected present a unique dynamic problem. Because of the inherent gaps that exist at various interfaces of the reactor vessel/reactor internals/fuel, the problem becomes that of nonlinear dynamic analysis of the reactor pressure vessel system. Therefore, nonlinear dynamic analyses (LOCA and Seismic) of the reactor pressure vessel system include the development of LOCA and seismic forcing functions.

Structural Model

Figure 3.9-1 is schematic representation of the reactor pressure vessel system. In this figure, the major components of the system are identified. The reactor pressure vessel system finite element model for the nonlinear time history dynamic analysis consists of three concentric structural sub-models connected by nonlinear impact elements and linear stiffness matrices. The first sub-model, shown in Figure 3.9-2a and 3.9-2b represents the reactor vessel shell and its associated components. The reactor vessel is restrained by four reactor vessel supports (situated beneath alternate nozzles) and by the attached primary coolant piping. Also shown in Figure 3.9-2a is a typical reactor pressure vessel support mechanism.

The second sub-model, shown in Figure 3.9-3a represents the reactor core barrel, lower support plate, tie plates, and the secondary support components for Watts Bar Unit 1. These sub-models are physically located inside the first, and are connected by stiffness matrices at the vessel/internals interfaces. Core barrel to reactor vessel shell impact is represented by nonlinear elements at the core barrel flange, upper support plate flange, core barrel outlet nozzles, and the lower radial restraints.

The third and innermost sub-model, shown in Figure 3.9-3b represents the upper support plate assembly consisting of guide tubes, upper support columns, upper and lower core plates, and the fuel. The fuel assembly simplified structural model incorporated into the reactor pressure vessel system model preserves the dynamic characteristics of the entire core. For each type of fuel design the corresponding simplified fuel assembly model is incorporated into the system model. The third sub-model is connected to the first and second by stiffness matrices and nonlinear elements. Finally, Figure 3.9-3c shows the reactor pressure vessel system model representation.

Analysis Technique

The WECAN Computer Code[19] which is used to determine the response of the reactor vessel and its internals, is a general purpose finite element code. In the finite

element approach, the structure is divided into a finite number of discrete members or elements. The inertia and stiffness matrices, as well as the force array, are first calculated for each element in the local coordinates. Employing appropriate transformations, the element global matrices and arrays are assembled into global structural matrices and arrays, and used for dynamic solution of the differential equation of motion for the structure.

$$[M]\{U\} + [D]\{U\} + [K]\{U\} = \{F\} \qquad (1)$$

The WECAN Code solves equation of motions (1) using the nonlinear modal superposition theory. Initial computer runs such as dead weight analysis and the vibration (modal) analyses are made to set the initial vertical interface gaps and to calculate eigenvalues and eigenvectors. The modal analysis information is stored on magnetic tapes, and is used in a subsequent computer runs which solves equation of motions. The first time step performs the static solution of equations to determine steady state solution under normal operating hydraulic forces. After the initial time step, WECAN calculates the dynamic solution of equations of motions and nodal displacements and impact forces are stored on tape for post-processing.

The fluid-solid interactions in the LOCA analysis are accounted through the hydraulic forcing functions generated by MULTIFLEX Code. Following a postulated LOCA pipe rupture, forces are imposed on the reactor vessel and its internals. These forces result from the release of the pressurized primary system coolant. The release of pressurized coolant results in traveling depressurization waves in the primary system. These depressurization waves are characterized by a wave front with low pressure on one side and high pressure on the other.

The LOCA loads applied to the reactor vessel system for the auxiliary line breaks consist of:

(a) reactor internals hydraulic loads (vertical and horizontal, and

(b) reactor coolant loop mechanical loads.

These loads are calculated individually and combined in a time history manner.

Reactor Pressure Vessel Internal Hydraulic Loads

Depressurization waves propagate from the postulated break location into the reactor vessel through either a hot leg or a cold leg nozzle. After a postulated cold leg break the depressurization path for waves entering the reactor vessel is through the nozzle which contains the broken pipe and into the region between the core barrel and the reactor vessel (i.e., down-comer region). The initial waves propagate up, around, and down the down-comer annulus, then up through the region circumferentially enclosed by the core barrel, that is, the fuel region.

In the case of cold leg break, the region of the down-comer annulus close to the break depressurizes rapidly but, because of the restricted flow areas and finite wave speed (approximately 3000 feet per second), the opposite side of the core barrel remains at

a high pressure. This results in a net horizontal force on the core barrel and the reactor vessel. As the depressurization wave propagates around the down-comer annulus and up through the core, the core barrel differential pressure reduces and, similarly, the resulting hydraulic forces drop.

In the case of a postulated break in the hot leg, the wave follows a similar depressurization path, passing through the outlet nozzle and directly into the upper internals region depressurizing the core and entering the down-comer annulus from the bottom exit of the core barrel. Thus, after a reactor pressure vessel outlet nozzle break, the down-comer annulus would be depressurized with very little difference in pressure forces across the outside diameter of the core barrel. A hot leg break produces less horizontal force because the depressurization wave travels directly to the inside of the core barrel (so that the down-comer annulus is not directly involved) and internal differential pressures are not as large as for a cold leg break of the same size. Since the differential pressure is less for a hot leg break, the horizontal force applied to the core barrel is less for hot leg break than for a cold leg break. For breaks in both the hot leg and cold leg, the depressurization waves continue to propagate by reflection and translation through the reactor vessel and loops.

The MULTIFLEX computer code, calculates the hydraulic transients within the entire primary coolant system. It considers subcooled, transition, and early two-phase (saturated) blowdown regimes. The MULTIFLEX code employs the method of characteristics to solve the conservation laws, and assumes one-dimensionality of flow and homogeneity of the liquid-vapor mixture. The MULTIFLEX code considers a coupled fluid-structure interaction by accounting for the deflection of constraining boundaries, which are represented by separate spring-mass oscillator system. A beam model of the core support barrel has been developed from the structural properties of the core barrel; in this model, the cylindrical barrel is vertically divided into equally spaced segments and the pressures as well as the wall motions are projected onto the plane parallel to the broken nozzle. Horizontally, the barrel is divided into 10 segments; each segment consists of three separate walls. The spatial pressure variation at each time step is transformed into 10 horizontal forces which act on the 10 mass points of the beam model. Each flexible wall is bounded on either side by a hydraulic flow path. The motion of the flexible wall is determined by solving the global equations of motions for the masses representing the forced vibration of an undamped beam.

Reactor Coolant Loop Mechanical Loads

The loop mechanical loads result from the release of normal operating forces present in the pipe prior to the separation as well as transient hydraulic forces in the RCS. The magnitudes of the loop release forces are determined by performing a reactor coolant loop analysis for normal operating loads (pressure, thermal, and deadweight). The load existing in the pipe at the postulated break location are calculated and are "released" at the initiation of the LOCA transient by application of the loads to the broken piping ends. These forces are applied with a ramp time of one millisecond because of the assumed instantaneous break opening time.

In order to obtain the response of reactor pressure vessel system (vessel/internals/fuel), the LOCA horizontal and vertical forces obtained from the LATFORC and FORCE-2 Codes, which were described earlier, together with the loop mechanical loads are applied to the finite element system model shown in Figure 3.9-3c. The transient response of the reactor internals consists of time history nodal displacements and time history impact forces.

3.9.2.5.5 Seismic Analysis

The basic mathematical model for seismic analysis is essentially similar to the LOCA model except for some minor differences. In LOCA model, as mentioned earlier, the fluid-structure interactions are accounted though the MULTIFLEX Code; whereas in the seismic model the fluid-structure interactions are included through the hydrodynamic mass matrices in the down-comer region. Another difference between the LOCA and seismic models is the difference in loop stiffness matrices. The seismic model uses the unbroken loop stiffness matrix, whereas the LOCA model uses the broken loop stiffness matrix. Except for these two differences, the reactor pressure vessel system seismic model is identical to that of LOCA model.

The horizontal fluid-structure or hydroelastic interaction is significant in the cylindrical fluid flow region between the core barrel and the reactor vessel annulus. Mass matrices with off-diagonal terms (horizontal degrees-of-freedom only) attach between nodes on the core barrel, thermal shield and the reactor vessel. The mass matrices for the hydroelastic interactions of two concentric cylinders are developed using the work of Reference [20]. The diagonal terms of the mass matrix are similar to the lumping of water mass to the vessel shell, thermal shield, and core barrel. The off-diagonal terms reflect the fact that all the water mass does not participate when there is no relative motion of the vessel and core barrel. It should be pointed out that the hydrodynamic mass matrix has no artificial virtual mass effect and is derived in a straight forward, quantitative manner.

The matrices are a function of the properties of two cylinders with the fluid in the cylindrical annulus, specifically, inside and outside radius of the annulus, density of the fluid and length of the cylinders. Vertical segmentation of the reactor vessel and the core barrel allows inclusion of radii variations along their heights and approximates the effects of beam mode deformation. These mass matrices were inserted between the selected nodes on the core barrel, thermal shield, and the reactor vessel. The seismic evaluations are performed by including the effects of simultaneous application of time history accelerations in three orthogonal directions. The WECAN computer code, which is described earlier, is also used to obtain the response for the reactor pressure vessel system under seismic excitations.

3.9.2.5.6 Results and Acceptance Criteria

The reactor internals behave as a highly nonlinear system during horizontal and vertical oscillations of the LOCA forces. The nonlinearities are due to the coulomb friction at the sliding surfaces and due to gaps between components causing discontinuities in force transmission. The frequency response is consequently a function not only of the exciting frequencies in the system but also of the amplitude.

Different break conditions excite different frequencies in the system. This situation can be seen clearly when the response under LOCA forces is compared with the seismic response. Under seismic excitations, the system response is not as nonlinear as LOCA response because various gaps do not close during the seismic excitations.

The results of the nonlinear LOCA and seismic dynamic analyses include the transient displacements and impact loads for various elements of the mathematical model. These displacements and impact loads, and the linear component loads (forces and moments) are then used for detailed component evaluations to assess the structural adequacy of the reactor vessel, reactor internals, and the fuel.

The stresses due to the Safe Shutdown Earthquake (SSE) are combined in the most unfavorable manner with the LOCA stresses in order to obtain the largest principal stresses and deflections. These results indicate that the maximum deflections and stress in the critical structures are below the established allowable limits. For transverse excitation of the core barrel, it is shown that the upper core barrel does not buckle during hot leg break.

The results also show that the guide tubes will deform well within the limits established experimentally to assure control rod insertion. Seismic deflections of the guide tubes are generally negligible by comparison with the no loss of function limit.

3.9.2.5.7 Structural Adequacy of Reactor Internals Components

The reactor internal components of Watts Bar Unit 1 are not ASME Code components. This is due to the fact that Sub-section NG of the ASME Boiler and Pressure Code edition applicable to Watts Bar reactor internals did not include design criteria for the reactor internals since its design preceded Subsection NG of the ASME Code. However, these components were originally designed to meet the intent of the 1971 Edition of Section III of the ASME Boiler and Pressure Vessel Code with addenda through the Winter 1971. As noted previously, that with the acceptance of LBB by NRC, the dynamic effects of the main reactor coolant loop piping are no longer considered in the design basis analysis. Only the dynamic effects of the next most limiting breaks of the auxiliary lines (accumulator line, pressurizer surge line, and RHR lines) are to be considered.

It should be noted that LBB discussed in Section 3.6A.2.1.5 also refers to the elimination of pressurizer surge line break from the design basis of Watts Bar Unit 1. Therefore, LOCA response of Watts Bar Unit 1 was determined for the auxiliary line breaks consisting of accumulator line and an RHR line. Consequently, the components experience considerably less loads and deformations than those from the main loop breaks which were considered in the original design of the reactor internals.

Allowable Deflection and Stability Criteria

The criterion for acceptability with regard to mechanical integrity analyses is that adequate core cooling and core shutdown must be ensured. This implies that the deformation of reactor internals must be sufficiently small so that the geometry remains substantially intact. Consequently, the limitations established on the reactor internals

are concerned principally with the maximum allowable deflections and stability of the components.

For faulted conditions, deflections of critical reactor internal components are limited to the values given in Table 3.9-5. In a hypothesized vertical displacement of internals, energy-absorbing devices limit the displacement to 1.25 inches by contacting the vessel bottom head.

Core Barrel Response Under Transverse Excitations

In general, there are two possible modes of dynamic response of the core barrel during LOCA conditions:

(a) During a cold leg break the inside pressure of the core barrel is much higher than the outside pressures, thus subjecting the core barrel to outward deflections.

(b) During a hot leg break the pressure outside the core barrel is greater than the inside pressure thereby subjecting the core barrel to compressive loading.

Therefore, this condition requires the dynamic stability check of the core barrel during a hot leg break.

(1) To ensure shutdown and cooldown of the core during cold leg blowdown, the basic requirement is a limitation on the outward deflection of the barrel at the locations of the inlet nozzles connected to unbroken lines. A large outward deflection of the upper barrel in front of the inlet nozzles, accompanied with permanent strains, could close the inlet area and restrict the cooling water coming from the accumulators. Consequently, a permanent barrel deflection in front of the unbroken inlet nozzles larger than a certain limit, called "no loss of function" limit, could impair the efficiency of the ECCS.

(2) During the hot leg break, the rarefaction wave enters through the outlet nozzle into the upper internals region and thus depressurizes the core and then enters the down-comer annulus from the bottom exit of the core barrel. This depressurization of the annulus region subjects the core barrel to external pressures and this condition requires a stability check of the core barrel during hot leg break. Therefore, to ensure rod insertion and to avoid disturbing the control rod cluster guide structure, the barrel should not interfere with the guide tubes.

Table 3.9-5 summarizes the allowable and no loss of function displacement limits of the core barrel for both the cold leg and hot leg breaks postulated in the main line loop piping. With the acceptance of LBB, the reactor internal components such as core barrel will experience much less loads and deformations than those obtained from main loop piping.

Control Rod Cluster Guide Tubes

The deflection limits of the guide tubes which were established from the test data, and for fuel assembly thimbles, cross-section distortion (to avoid interference between the control rood and the guides) are given in Table 3.9-5

Upper Package

The local vertical deformation of the upper core plate, where a guide tube is located, shall be below 0.100 inch. This deformation will cause the plate to contact the guide tube since the clearance between the plate and the guide tube is 0.100 inch. This limit will prevent the guide tubes from undergoing compression. For a plate local deformation of 0.150 inch, the guide tube will be compressed and deformed transversely to the upper limit previously established. Consequently, the value of 0.150 inch is adopted as the no loss function local deformation with an allowable limit of 0.100 inch.

3.9.2.6 Correlations of Reactor Internals Vibration Tests With the Analytical Results

The dynamic behavior of reactor components has been studied using experimental data obtained from operating reactors along with results of model tests and static and dynamic tests in the fabricators shops and at plant site. Extensive instrumentation programs to measure vibration of reactor internals (including prototype units of various reactors) have been carried out during preoperational flow tests, and reactor operation.

From scale model tests, information on stresses, displacements, flow distribution, and fluctuating differential pressures is obtained. Studies have been performed to verify the validity and determine the prediction accuracy of models for determining reactor internals vibration due to flow excitation. Similarity laws were satisfied to assure that the model response can be correlated to the real prototype behavior.

Vibration of structural parts during prototype plants preoperational tests is measured using displacement gages, accelerometers, and strain transducers. The signals are recorded with F.M. magnetic tape records. On site and offsite signal analysis is done using both hybrid real time and digital techniques to determine the (approximate) frequency and phase content. In some structural components the spectral content of the signals include nearly discrete frequency or very narrow-band, usually due to excitation by the main coolant pumps and other components that reflect the response of the structure at a natural frequency to broad bands, mechanically and/or flow-induced excitation. Damping factors are also obtained from wave analyses.

It is known from the theory of shells that the normal modes of a cylindrical shell can be expressed as sine and cosine combinations with indices m and n indicating the number of axial half waves and circumferential waves, respectively. The shape of each mode and the corresponding natural frequencies are functions of the numbers m and n. The general expression for the radial displacement of a simply supported shell is:

$$w(x, \psi, t) = \ddot{\Sigma}_{n=0} \ddot{\Sigma}_{m=1} \left[A_{nm}(t)\cos n\psi + B_{nm}(t)\sin n\psi\right] \sin\frac{M\pi x}{L}$$

The shell vibration at a natural frequency depends on the boundary conditions at the ends. The effect of the ends is negligible for long shells or for higher order m modes, and long shells have the lowest frequency for n = 2 (elliptical mode). For short shells, the effects of the ends are more important, and the shell will tend to vibrate in modes corresponding to values of n > 2.

In general, studies of the dynamic behavior of components follow two parallel procedures: 1) obtain frequencies and spring constants analytically, and 2) confirm these values from the results of the tests. Damping coefficients are established experimentally. Once these factors are established, the response can be computed analytically. In parallel, the responses of important reactor structures are measured during preoperational reactor tests and the frequencies and mode shapes of the structures are obtained.

Theoretical and experimental studies have provided information on the added apparent mass of the water, which has the effect of decreasing the natural frequency of the component. For both cases, cross and parallel, the response is obtained after the forcing function and the damping of the system is determined.

Pre- and post-hot functional inspection results, in the case of plants similar to prototypes, serve to confirm predictions that the internals are well behaved. Any gross motion or undue wear would be evident following the application of approximately 10^7 cycles of vibration expected during the test period.

3.9.3 ASME Code Class 1, 2 and 3 Components, Component Supports and Core Support Structures

3.9.3.1 Loading Combinations, Design Transients, and Stress Limits

3.9.3.1.1 Subsystems and Components Supplied by Westinghouse

Design transients are presented in Section 5.2.1.5.

For ASME Code Class 1 components, systems, and supports, loading conditions are presented in Section 5.2.1.10.1, and stress criteria are provided in Section 5.2.1.10.7. Additional information concerning methods of analysis is presented throughout Section 5.2.1.10. Results of analyses are documented in the stress reports that describe the system or components.

For core support structures, design loading conditions are given in Section 4.2.2.3. Design loading conditions are discussed in Section 4.2.2.4.

In general, for reactor internals components and for core support structures, the criteria for acceptability, with regard to mechanical integrity analyses, are that adequate core cooling and core shutdown must be assured. This implies that the deformation of the

reactor internals must be sufficiently small so that the geometry remains substantially intact. Consequently, the limitations established on the internals are concerned principally with the maximum allowable deflections and stability of the parts, in addition to a stress criterion to assure integrity of the components.

For the LOCA plus the SSE condition, deflections of critical internal structures are limited. In a hypothesized downward vertical displacement of the internals, energy absorbing devices limit the displacement after contacting the vessel bottom head, ensuring that the geometry of the core remains intact.

The following mechanical functional performance criteria apply:

(1) Following the design basis accident, the functional criterion to be met for the reactor internals was that the plant shall be shutdown and cooled in an orderly fashion so that fuel cladding temperature was kept within specified limits. This criterion implies that the deformation of critical components must be kept sufficiently small to allow core cooling.

(2) For large breaks, the reduction in water density greatly reduces the reactivity of the core, thereby shutting down the core whether the rods are tripped or not. The subsequent refilling of the core by the emergency core cooling system uses borated water to maintain the core in a subcritical state. Therefore, the main requirement was to assure effectiveness of the emergency core cooling system. Insertion of the control rods, although not needed, gives further assurance of ability to shut the plant down and keep it in a safe shutdown condition.

(3) The inward upper barrel deflections are controlled to ensure no contacting of the nearest rod cluster control guide tube. The outward upper barrel deflections are controlled in order to maintain an adequate annulus for the coolant between the vessel inner diameter and core barrel outer diameter.

(4) The rod cluster control guide tube deflections are limited to ensure operability of the control rods.

(5) To ensure no column loading of rod cluster control guide tubes, the upper core plate deflection is limited.

Methods of analysis and testing for core support structures are discussed in Sections 3.9.1.3, 3.9.1.4.1, 3.9.2.3, 3.9.2.5, and 3.9.2.6. Stress limits and deformation criteria are given in Sections 4.2.2.4 and 4.2.2.5.

3.9.3.1.1.1 Plant Conditions and Design Loading Combinations For ASME Code Class 2 and 3 Components Supplied by Westinghouse

Design pressure, temperature, and other loading conditions that provide the bases for design of fluid systems Code Class 2 and 3 components are presented in the sections which describe the systems.

3.9.3.1.1.2 Design Loading Combinations by Westinghouse

The design loading combinations for ASME Code Class 2 and 3 equipment and supports are given in Table 3.9-1. The design loading combinations are categorized with respect to Normal, Upset, Emergency, and Faulted Conditions.

Stress limits for each of the loading combinations are equipment oriented and are presented in Tables 3.9-2, 3.9-3, 3.9-4, and 3.9-6 for tanks, inactive pumps, valves, and active pumps, respectively. The definition of the stress equations and limits are in accordance with the ASME Code as follows:

(a) For tanks and all other equipment, Section III of the ASME Code, 1971 Edition through Summer 1973 Addenda, Code Cases 1607-1, 1635-1, 1636-1 and 1657 were utilized to establish stress limits for Normal, Upset, Emergency, and Faulted Conditions.

(b) Equipment was provided in accordance with the Code Edition and Addenda in effect on the date of the contract.

For the actual numerical values of the allowables for specific equipment, the ASME Code Edition applicable to the time period of equipment procurement as specified on the procurement documents was used for the qualification.

Active (Active components are those whose operability is relied upon to perform a safety function (as well as reactor shutdown function) during the transients or events considered in the respective operating condition categories) pumps and valves are discussed in Section 3.9.3.2. The equipment supports were designed in accordance with the requirements specified in Section 3.9.3.4.

3.9.3.1.1.3 Design Stress Limits By Westinghouse

The design stress limits established for equipment are sufficiently low to assure that violation of the pressure retaining boundary will not occur. These limits, for each of the loading combinations, are equipment oriented and are presented in Tables 3.9-2 through 3.9-4, and 3.9-6. See Section 3.9.3.1.1.2 for discussion of applicable code editions.

3.9.3.1.2 Subsystems and Components Analyzed or Specified by TVA

(A) ASME Code Class 1, 2, and 3 Piping.

The analytic procedures and modeling of piping systems are discussed in Sections 3.7.3.8 and 3.7.3.3*. As discussed in Section 3.7.3.8.1 the TVA analysis effort has been categorized into two approaches: Rigorous and Alternate. The loading sources, conditions, and stress limits are described below for each category and the results are summarized for each.

---

* Generated reactor coolant loop response spectra curves and movements enveloping the Set B + Set C curves are used for the analysis or reanalysis of auxiliary piping systems attached to the reactor coolant loops. The ASME Code Case N-411 or Regulatory Guide 1.61 damping values can be used when Set B + Set C spectra are considered.

(1) Loading Conditions, Stress Limits and Requirements for Rigorous Analysis

(a) The loading sources considered in the rigorous analysis of a piping system are defined in Table 3.9-7.

(b) The piping was analyzed to the requirements of applicable codes as defined in Section 3.7.3.8.1.

(c) The design load combinations are categorized with respect to Normal, Upset, Emergency, and Faulted Conditions. Class 1 piping was analyzed using the limits established in Table 3.9-8 for all applicable loading conditions. The pressurizer surge line was also evaluated for the thermal stratification and thermal striping in response to the NRC Bulletin 88-11. Other rigorously analyzed piping meets the limits established in Table 3.9-9 for all applicable loading conditions.

(d) Consideration was given to the sequence of events in establishing which load sources are taken as acting concurrently.

(e) Equipment nozzle loads are within vendor and/or TVA allowable values. This ensures that functionality and 'Active' equipment operability requirements are met.

(f) All equipment (i.e., valves, pumps, bellows, flanges, strainers, etc.) was checked to ensure compliance with vendor limitations.

(g) The pipe/valve interface at each active valve was evaluated and the pipe stresses are limited to the levels indicated in Table 3.9-10 unless higher limits are technically justified on a case-by-case basis.

(h) Documentation of rupture stress was provided for the locations in the system being analyzed where the stress exceeds the limits for which pipe rupture postulation was required (See Section 3.6). The tabulation identifies the point and tabulates the stress for each point exceeding the limits.

(i) Valves with extended operators or structures (including handwheels) meet the dynamic plus gravitational acceleration limits of 3g along the stem axis and 3g (vectorial summation) in the plane perpendicular to the valve stem axis. For 1-inch and smaller valves with handwheels, the dynamic plus gravitational acceleration limit is 3g in each of the three global (or local) directions. These limits apply to any valve orientation and must be maintained during piping analysis.

For steel body check valves (which have no external operators or structures) the limit for dynamic plus gravitational acceleration was 10g (vectorial summation of all three orthogonal directions).

The valves as a minimum are qualified to the acceleration limits specified above. Higher accelerations are approved based on case-by-case technical justification.

(j) Excessive pipe deformation was avoided.

(k) Welded attachment loads and stresses for TVA Class 1 piping were evaluated in accordance with ASME Code Cases N-122 and N-391.

For Class 2 and 3 piping, loads and stresses from welded attachments were evaluated in accordance with ASME Code Cases N-318 and N-392.

Special cases of other welded attachments were evaluated by detailed finite element analysis or other applicable methods to assure that ASME Code stress allowables were met.

The attachment welds are full penetration, partial penetration, or fillet welded as detailed on the support drawings. Attachments are used generally on all piping systems, and locations can be determined from the support drawings.

(2) Loading Conditions and Stress Limits for Alternate Analysis

(a) The scope of the alternate analysis application is generally limited to systems having the following load sources: self-weight, internal pressure, seismic event, end point displacement, and limited thermal expansion. (Other load sources may be considered for special cases.)

(b) The design load combinations are categorized with respect to Normal, Upset, Emergency, and Faulted Conditions. The criteria are developed to meet the stress limits given in Table 3.9-9 considering the applicable load sources.

(c) The general limitations imposed on the piping by the application of the Alternate Analysis method are discussed in Section 3.7.3.8.3. For ASME Category I piping designed by alternate analysis, the same levels of valve acceleration and interface/nozzle load requirements of Section 3.9.3.1.2.A shall be maintained. Non-ASME, Category I(L) piping designed by alternate analysis is described in Sections 3.7.3.8.3 and 3.2.1.

(3) Considerations for the Faulted Condition

Tables 3.9-8 through 3.9-10 identify the load sources and allowed stresses associated with the faulted condition. The stress limits used are those limits established in ASME Section III for the faulted condition.

The feedwater system inside containment, from the check valves to the steam generators including the piping components are evaluated for pressure boundary integrity to withstand the postulated water hammer event due to the feedwater check valve slam following pipe rupture at the main header (Turbine Building) using the ASME Section III Appendix F (1980 Edition through Winter 1982 Addenda) rules and limits.

The four main feedwater check valves were evaluated for structural integrity following the feedwater pipe rupture. Energy equivalence methods, in conjunction with nonlinear finite element and linear hand analyses, were used. The evaluations demonstrated that deformations in three of the four valves are within acceptable strain levels following the slam. With the assumption that the fourth valve is not functional, the transient effects of the resulting one steam generator blowdown are bounded by the "Major Rupture of a Main Feedwater Pipe inside containment" per Section 15.4.2.2.

Note that during the rigorous analysis phase of most piping systems, the postulated break locations are unknown and the jet impingement loads are unavailable and thus not included in the evaluation of the faulted condition. However, where it was determined by the guidelines of Section 3.6 that jet impingement must be evaluated, the effect of the loads on pipe stress was evaluated during the pipe rupture analysis.

(4) Summary of Results - Rigorous Analysis of Class 1 and Class 2/3 Piping Performed by TVA

The results of the piping system analyses performed in accordance with the above paragraphs are presented and consolidated in a calculations with the following documentation:

(a) Certification Report for ASME Code Class 1 Analyses.

(b) Owner's review for ASME Code Class 1 Analyses.

(c) Statement of Compliance with code requirements for ASME Code Class 2/3 Analyses.

(d) Problem revision status form - for maintaining the traceability of revision performed on analysis, and correlating various forms affected by each revision.

(e) Piping input data for recording all physical data used in the analysis.

(f) Table of system operating modes - for identifying the various thermal conditions required and included in analysis.

(g) Stress summary - for summarizing the maximum stresses for various loading combinations.

(h) Equipment nozzle load qualification to demonstrate satisfaction of limits.

(i) Valve acceleration qualification to demonstrate satisfaction of limits.

(j) Summary of loads and movements at pipe supports.

A record copy of these problem calculations is maintained at TVA and is available for review upon request.

(B) Category I ASME Code Class 2 and 3 Mechanical Equipment

(1) Plant Conditions and Design Loading Combinations

Design pressure, temperature, and other loading conditions that provide the bases for design of fluid systems Code Class 2 and 3 components are presented in the sections which describe the systems.

(2) Design Loading Combinations

The design loading combinations for ASME Code Class 2 and 3 equipment and supports are given in Table 3.9-13B. The design loading combinations are categorized with respect to Normal, Upset, Emergency and Faulted Conditions.

Stress limits for each of the loading combinations are equipment oriented and are presented in Tables 3.9-14, 3.9-15 and 3.9-16 for tanks, inactive* pumps, and inactive* valves respectively. The definition of the stress equations and limits are in accordance with the ASME Code as follows (* Inactive components are those whose operability are not relied upon to perform a safety function during the transients or events considered in the respective operating condition category):

(a) For tanks and all other equipment, Section III of the ASME Code, 1971 Edition through Summer 1973 Addenda, Code Cases 1607-1, 1635-1, 1636-1 and 1657 were utilized to establish stress limits for Normal, Upset, Emergency, and Faulted conditions.

(b) Equipment was provided in accordance with the Code Edition and Addenda in effect on the date of the award of contract.

For the actual numerical values of the allowables for specific equipment, the ASME Code Edition applicable to the time period of equipment procurement as specified on the procurement documents was used for the qualification.

Active* pumps and valves are discussed in Section 3.9.3.2.1. The vendor supplied equipment/component supports stress levels are limited to the allowable stress of AISC or ASME Section III subsection NF or other comparable stress limits as delineated in the applicable design specification. Section 3.8.4 describes the allowable stresses used for TVA-designed equipment/component supports.

The design stress limits established for the components are sufficiently low to assure that violation of the pressure retaining boundary will not occur. These limits, for each of the loading combinations, are component oriented and are presented in Tables 3.9-14 through 3.9-16.

3.9.3.2 Pumps and Valve Operability Assurance

3.9.3.2.1 Active* ASME Class 1, 2, & 3 Pumps and Valves

*Active components are those whose operability is relied upon to perform a safety function (as well as reactor shutdown function) during the transients or events considered in the respective operating condition categories.

The list of active valves for primary fluid (i.e., water and steam containing components) systems in the Westinghouse scope of supply is presented in Table 3.9-17. The list of active pumps supplied by Westinghouse is presented in Table 3.9-28. The list of pumps and valves for fluid systems within TVA scope of supply are presented in Tables 3.9-25 and 3.9-27. Only ASME Section III pumps and valves that were purchased after September 1, 1974, were considered to be within the scope of WBN compliance with Regulatory Guide 1.48. These pumps and valves meet the special design requirements verifying operability as specified in Regulatory Guide 1.48. The remaining components in Tables 3.9-17, 3.9-25, 3.9-27, and 3.9-28 meet the appropriate qualification requirements in accordance with the guidelines of IEEE 344-1971 and consistent with the ASME Code applicable at the time of the contract date for procuring the component. These qualifications provide an adequate level of operability assurance for all active pumps and valves.

The following rules were used to identify active pumps and valves:

(1) Only FSAR Chapter 15 Design Basis Events (DBE's) were assumed. These DBE's were studied to identify the active pumps and valves required to mitigate the DBE and place the plant in a safe shutdown condition.

(2) Reactor Coolant Pressure Boundary (RCPB) - Valves that are a part of the RCPB [defined by 10 CFR Section 50.2(v)] and require movement to isolate the RCS were identified as active.

(3) Containment Isolation - Containment isolation valves that require movement to isolate the containment were identified as active.

(4) Check Valves - Any check valve required to close or cycle when performing its system safety function was identified as active.

Any check valve that was only required to open in the performance of its system safety function was not identified as active. This position was justified by: (a) the free-swinging nature of the valves and (b) the normal stress over-design of the valve body.

(5) Achieve and Maintain a Safe Shutdown Condition - The minimum redundant complement of equipment required to achieve and maintain safe shutdown was selected.

3.9.3.2.2 Operability Assurance

3.9.3.2.2.1 Westinghouse Scope of Supply

Mechanical equipment classified as safety-related must be shown capable of performing its function during the life of the plant under postulated plant conditions. Equipment with faulted condition functional requirements include 'active' pumps and valves in fluid systems such as the residual heat removal system, safety injection system, and the containment spray system. Seismic analysis is presented in Section 3.7 and covers all safety-related mechanical equipment.

Operability is assured by satisfying the requirements of the programs specified below. Additionally, equipment specifications include requirements for operability under the specified plant conditions and define appropriate acceptance criteria to ensure that the program requirements defined below are satisfied.

Pump and Valve Qualification for Operability Program

Active pumps are qualified for operability by first, being subjected to rigid tests both prior to installation in the plant and after installation in the plant. The in-shop tests include: 1) hydrostatic tests of pressure retaining parts to 150 percent times the design pressure times the ratio of material allowable stress at room temperature to the allowable stress value at the design temperature, 2) seal leakage tests, and 3) performance tests to determine total developed head, minimum and maximum head, net positive suction head (NPSH) requirements and other pump parameters. Also monitored during these operating tests are bearing temperatures and vibration levels. Bearing temperature limits are determined by the manufacturer, based on the bearing material, clearances, oil type, and rotational speed. These limits are approved by Westinghouse. Vibration limits are also determined by the manufacturer and are approved by Westinghouse. After the pump is installed in the plant, it undergoes the cold hydro-tests, hot functional test, and the required periodic inservice inspection and operation. These tests demonstrate that the pump will function as required during all

normal operating conditions for the design life of the plant. In addition to these tests, the safety-related active pumps, are qualified for operability by assuring that the pump will start up, continue operating, and not be damaged during the faulted condition.

The pump manufacturer was required to show by analysis correlated by test, prototype tests or existing documented data that the pump will perform its safety function when subjected to loads imposed by the maximum seismic accelerations and the maximum faulted nozzle loads. It was required that test or dynamic analysis be used to show that the lowest natural frequency of the pump is greater than 33 Hz. The pump, when having a natural frequency above 33 Hz, is considered essentially rigid. This frequency is sufficiently high to avoid problems with amplification between the component and structure for all seismic areas. A static shaft deflection analysis of the rotor was performed with the conservative SSE accelerations of 3g horizontal and 2g vertical acting simultaneously. The deflections determined from the static shaft analysis were compared to the allowable rotor clearances. The nature of seismic disturbances dictates that the maximum contact will be of short duration. If rubbing or impact is predicted, it is required that it be shown by prototype tests or existing documented data that the pump will not be damaged or cease to perform its design function. The effect of impacting on the operation of the pump was evaluated by analysis or by comparison of the impacting surfaces of the pump to similar surfaces of pumps which had been tested.

In order to avoid damage during the faulted plant condition, the stresses caused by the combination of normal operating loads, SSE, dynamic system loads are limited to the limits indicated in Table 3.9-6. In addition, the pump casing stresses caused by the maximum faulted nozzle loads are limited to the stresses outlined in Table 3.9-6.

The changes in operating rotor clearances caused by casing distortions due to these nozzle loads were considered. The maximum seismic nozzle loads combined with the loads imposed by the seismic accelerations were considered in an analysis of the pump supports. Furthermore, the calculated misalignment was shown to be less than that misalignment which could cause pump misoperation. The stresses in the supports are below those in Table 3.9-6; therefore, the support distortion is elastic and of short duration (equal to the duration of the seismic event).

Performing these analyses with the conservative loads stated and with the restrictive stress limits of Table 3.9-6 as allowables, assure that critical parts of the pump are not damaged during the short duration of the faulted condition and that, therefore, the reliability of the pump for post-faulted condition operation is not impaired by the seismic event.

If the natural frequency was found to be below 33 Hz, an analysis was performed to determine the amplified input accelerations necessary to perform the static analysis. The adjusted accelerations were determined using the same conservatisms contained in the 3g horizontal and 2g vertical accelerations used for 'rigid' structures. The static analysis was performed using the adjusted accelerations; the stress limits stated in Table 3.9-6 were satisfied.

To complete the seismic qualification procedures, the pump motor was qualified for operation during the maximum seismic event. Any auxiliary equipment identified to be vital to the operation of the pump or pump motor, and which is not proven adequate for operation by the pump or motor qualifications, was separately qualified by meeting the requirements of IEEE Standard 344-1971 or -1975, as applicable, with the additional requirements and justifications outlined in this section.

The program above gives the required assurance that the safety-related pump/motor assemblies will not be damaged and will continue operating under SSE loadings, and, therefore, will perform their intended functions. These proposed requirements take into account the complex characteristics of the pump and are sufficient to demonstrate and assure the seismic operability of the active pumps.

Since the pump is not damaged during the faulted condition, the functional ability of active pumps after the faulted condition is assured since only normal operating loads and steady state nozzle loads exist. Since it is demonstrated that the pumps would not be damaged during the faulted condition, the post-faulted condition operating loads will be identical to the normal plant operating loads. This is assured by requiring that the imposed nozzle loads (steady-state loads) for normal conditions and post-faulted conditions are limited by the magnitudes of the normal condition nozzle loads. The post-faulted condition ability of the pumps to function under these applied loads is proven during the normal operating plant conditions for active pumps.

Safety-related active valves must perform their mechanical motion at times of an accident. Assurance was supplied that these valves will operate during a seismic event. Tests and analyses were conducted to qualify active valves.

The safety-related active valves were subjected to a series of stringent tests prior to service and during the plant life. Prior to installation, the following tests were performed: shell hydrostatic test to ASME Section III requirements, backseat and main seat leakage tests, disc hydrostatic test, and operational tests to verify that the valve will open and close.

For the active valves qualification of electric motor operators for the environmental conditions (i.e., aging, radiation, accident environment simulation, etc.) refer to Section 3.11 and Regulatory Guide 1.73. Cold hydro tests, hot functional qualifications tests, periodic inservice inspections, and periodic inservice operations are performed in-situ to verify and assure the functional ability of the valve. These tests guarantee reliability of the valve for the design life of the plant. The valves are constructed in accordance with the ASME Boiler and Pressure Vessel Code, Section III.

On all active valves, an analysis of the extended structure was performed for static equivalent seismic SSE loads applied at the center of gravity of the extended structure. The stress limits allowed in these analyses show structural integrity. The limits used for active Class 2 and 3 valves are shown in Table 3.9-4.

In addition to these tests and analyses, a representative electric motor operated valve was tested for verification of operability during a simulated plant faulted condition event

by demonstrating operational capabilities within the specified limits. The testing procedures are described below.

The valve was mounted in a manner which represents typical valve installations. The valve include operator and limit switches if such are normally attached to the valve in service. The faulted condition nozzle loads were considered in the test in either of two ways: 1) loads equivalent to the faulted condition nozzle loads were limited such that the operability of the valve was not affected.

The operability of the valve during a faulted condition was demonstrated by satisfying the following criteria:

(1) All the active valves were designed to have a first natural frequency which is greater than 33 Hz, if it was practical to do so. If the lowest natural frequency of an active valve was less than 33 Hz, then the valve's mathematical model was included in the piping dynamic analysis, so as to assure the calculated valve acceleration does not exceed the values used in the static tests of the manufacturer's qualification program and to reflect the proper valve dynamic behavior.

(2) The actuator and yoke of the representative motor operated valve system was statically deflected using an equivalent static load that simulates those conditions applied to the valve under faulted condition accelerations applied at the center of gravity of the operator alone in the direction of the weakest axis of the yoke. The design pressure of the valve was simultaneously applied to the valve during the static deflection tests.

(3) The valve was cycled while in the deflected position. The time required to open or close the valve in the defected position was compared to similar data taken in the undeflected condition to evaluate the significance of any change.

The accelerations used for the static valve qualification were 3g horizontal and 2g vertical with the valve yoke axis vertical. The piping designer maintained the operator accelerations to these levels unless higher limits were technically justified on a case-by-case basis.

The testing was conducted on the valves with extended structures which are most affected by acceleration, according to mass, length and cross-section of extended structures. Valve sizes which cover the range of sizes in service were qualified by the tests and the results are used to qualify all valves within the intermediate range of sizes.

Valves which are safety-related but can be classified as not having an extended structure, such as check valves and safety valves, were considered separately. Check valves are characteristically simple in design and their operation will not be affected by seismic accelerations or the applied nozzle loads. The check valve design is compact and there are no extended structures or masses whose motion could cause distortions which could restrict operation of the valve. The nozzle loads due to seismic excitation will not affect the functional ability of the valve since the valve disc is typically designed

to be isolated from the body wall. The clearance supplied by the design around the disc will prevent the disc from becoming bound or restricted due to any body distortions caused by nozzle loads. Therefore, the design of these valves is such that once the structural integrity of the valve is assured using standard design or analysis methods, the ability of the valve to operate is assured by the design features. In addition to these design considerations, the valve was subjected to the following tests and analysis: 1) in-shop hydrostatic test, 2) in-shop seat leakage test, and 3) periodic in-situ valve exercising and inspection to assure the functional ability of the valve.

The pressurizer safety valves were qualified by the following procedures (these valves are also subjected to tests and analysis similar to check valves): stress and deformation analyses of critical items which may affect operability for faulted condition loads, in-shop hydrostatic and seat leakage tests, and periodic in-situ valve inspection. In addition to these tests, a static load equivalent to that applied by the faulted condition will be applied at the top of the bonnet and the pressure was increased until the valve mechanism actuates. Successful actuation within the design requirements of the valve assure its overpressurization safety capabilities during a seismic event.

Using these methods, active valves were qualified for operability during a faulted event. These methods conservatively simulate the seismic event and assure that the active valves will perform their safety-related function when necessary. The above testing program for valves is conservative. Alternate valve operability testing, such as dynamic vibration testing, is allowed if it is shown to adequately assure the faulted condition functional ability of the valve system.

Pump Motor and Valve Operator Qualification

Active pump motors (and vital pump appurtenances) and active valve electric motor operators (and limit switches and pilot solenoid valves), were seismically qualified by meeting the requirements of IEEE Standard 344-1971 or 1975, as applicable. If the testing option is chosen, sine-beat testing was justified. This justification was provided by satisfying one or more of the following requirements to demonstrate that multifrequency response is negligible or the sine-beat input is of sufficient magnitude to conservatively account for this effect.

(1) The equipment response is basically due to one mode.

(2) The sine-beat response spectra envelopes the floor response spectra in the region of significant response.

(3) The floor response spectra consists of one dominant mode and has a peak at this frequency.

If the degree of coupling in the equipment is small, then single axis testing may have been justified justified. Multi-axis testing was required if there is considerable cross coupling; however, if the degree of coupling can be determined, then single axis testing will be used with the input sufficiently increased to include the effect of coupling on the response of the equipment.

Seismic qualification by analysis alone, or by a combination of analysis and testing, has been used when justified. The analysis program can be justified by:
1) demonstrating that equipment being qualified is amendable to analysis, and 2) that the analysis be correlated with test or be performed using standard analysis techniques.

3.9.3.2.2.2 TVA Scope of Supply

TVA used the following criteria to prescribe a suitable program to assure the functional adequacy of active Category I fluid system components (pumps and valves) under combined loading conditions. These criteria supplement or amend previously stated requirements for fluid system components in those cases where the components are judged to be active (i.e., if they perform a required mechanical motion during the course of accomplishing a safety function). These criteria assure that all active seismic Category I fluid system components will maintain structural integrity and perform their safety functions under loadings, including seismic, associated with normal, upset, and faulted conditions. These criteria are similar to the accepted response to NRC Position for the TVA's Bellefonte Nuclear Plant units 1 and 2 concerning compliance with the requirements of Regulatory Guide 1.48. The exception is that the seismic qualification for Watts Bar is for a 2-dimensional earthquake, while for Bellefonte it is for a 3-dimension earthquake.

3.9.3.2.3 Criteria For Assuring Functional Adequacy of Active Seismic Category I Fluid System Components (Pumps and Valves) and Associated Essential Auxiliary Equipment

(1) The seismic design adequacy of Category I electrical power and control equipment and instrumentation directly associated with the active Category I pumps and valves is assured by seismically qualifying the components by analysis and/or testing in accordance with the requirements of IEEE Standard 344 (for applicable edition, refer to Section 3.9.2.2).

(2) When either analysis or testing is used to demonstrate the seismic design adequacy of Category I components, the characteristics of the required input motion is specified by either response spectra, power spectral density function or time history data derived from the structure or system seismic analysis. When the testing method is used, random vibration input motion shall be used, but single frequency input, such as sine beats, may be used provided that:

(a) The characteristics of the required input motion indicate that the motion is dominated by one frequency.

(b) The anticipated response of equipment is adequately represented by one mode.

(c) The input has sufficient intensity and duration to excite all modes to the required magnitude, such that the testing response spectra will envelop the corresponding response spectra of the individual modes.

For equipment with more than one dominant frequency and for equipment supported near the base of the structure where some random components of the earthquake may remain, single frequency testing may still be applicable provided that the input has sufficient intensity and duration to excite all modes to the required magnitude, such that the testing response spectra will envelop the corresponding response spectra of the individual modes. When equipment responses along one direction are sensitive to the vibration frequencies along another perpendicular direction, in the case of single frequency testing, the time phasing of the inputs in the vertical and horizontal directions is such that a purely rectilinear resultant output is avoided.

In both the testing and analysis procedure, the possible amplified design loads for vendor supplied equipment is considered as follows:

(a) If supports were tested, they were tested with the actual components mounted and operating or if the components are inoperative during the support test, the response at the equipment mounting locations were monitored and components were tested separately and the actual input to the equipment was more conservative in amplitude and frequency content than the monitored responses.

(b) The support analysis includes the component loads. Seismic restraints were used as applicable with their adequacy verified by either testing or analysis as described above.

(3) Active Category I pumps were subjected to tests both prior to installation in the plant and after installation in the plant. The in-shop tests include (a) hydrostatic tests of pressure-retaining parts, (b) seal leakage tests, and (c) performance tests, while the pump is operated with flow, to determine total developed head, minimum and maximum head, net positive suction head (NPSH) requirements and other pump/motor parameters. Bearing temperatures and vibration levels were monitored during these operating tests. Both were shown to be below appropriate limits specified to the manufacturer for design of the pump. After the pump was installed in the plant, it was subjected to cold hydro tests, or operational tests, hot functional tests, and the required periodic in-service inspection and operation.

(4) Active Category I pumps were analyzed to show that the pump will operate normally when subjected to the maximum seismic accelerations and maximum seismic nozzle loads. Tests or dynamic analysis show that the lowest natural frequency of the pump is above 33 Hz, and thus considered essentially rigid. A static shaft deflection analysis of the rotor was performed with the conservative seismic accelerations of 1.5 times the applicable plant floor response spectra. The deflections determined from the static shaft analysis were compared to the allowable rotor clearances. Stresses caused by the combination of normal operating loads, seismic, and dynamic system loads were limited to the material elastic limit, as indicated in Table 3.9-18. The primary membrane stress (P_m) for the faulted conditions loads were limited to $1.2S_h$, or approximately 0.75 S (S = yield stress). The primary

membrane stress plus the primary bending stress (P_b) was limited to $1.8S_h$, or approximately 1.1S. In addition, the pump nozzle stresses caused by the maximum seismic nozzle loads were limited to stresses outlined in Table 3.9-18. The maximum seismic nozzle loads were considered in an analysis of the pump supports to assure that a system misalignment cannot occur.

If the natural frequency is found to be below 33 Hz, then analyses are performed to determine the amplified input accelerations necessary to perform the static analysis. The adjusted accelerations were determined using the same conservatism contained in the accelerations used for "rigid" structures. The static analysis is performed using the adjusted accelerations; the stress limits stated in Table 3.9-18 were satisfied.

(5) Each type of active Category I pump motor is independently qualified for operating during the maximum seismic event. Any appurtenances which are identified to be vital to the operation of the pump or pump motor and which are not qualified for operation during the pump analysis or motor qualifications, shall also be separately qualified for operation at the accelerations each would see at its mounting. The pump motor and vital appurtenances are qualified by meeting the requirements of IEEE Standard 344- 1971 or 1975 edition, depending on the procurement date (see Section 3.9.2.2.). If the testing option was chosen, sine-beat testing was justified by satisfying one or more of the following requirements to demonstrate that multifrequency response is negligible or the sine-beat input is of sufficient magnitude to conservatively account for this effect.

(a) The equipment response is basically due to one mode.

(b) The sine-beat response spectra envelops the floor response spectra in the region of significant response.

(c) The floor response spectra consists of one dominant mode and have a peak at this frequency. The degree of mass or stiffness coupling in the equipment will, in general, determine if a single or multi-axis test is required. Multi-axis testing is required if there is considerable cross coupling. If coupling is very light, then single axis testing is justified; or, if the degree of coupling can be determined, then single axis testing was used with the input sufficiently increased to include the effect of coupling on the response of the equipment.

(6) The post-faulted condition operating loads for active Category I pumps was considered identical to the normal plant operating loads. This is assured by requiring that the imposed nozzle loads (steady-state loads) for normal conditions and post-faulted conditions be limited by the magnitudes of the normal condition nozzle loads. Thus, the post-faulted condition ability of the pumps to function under these applied loads was proven during the normal operating plant conditions.

(7) Active Category I valves, except check valves, were subjected to a series of stringent tests prior to installation and after installation in the plant. Prior to installation, the following tests were performed: (a) shell hydrostatic test, (b) backseat and main seat leakage tests, (c) disc hydrostatic test, (d) functional tests to verify that the valve will operate within the specified time limits when subjected to the design differential pressure prior to operating, and (e) operability qualification of motor and air operator control valves for the conditions over their installed life (i.e., aging, radiation, accident environment simulation, etc.) in accordance with the requirements of IEEE Standard 382 (see Section 3.11). Cold hydro qualification tests, preoperational tests, hot functional qualification tests, periodic inservice inspections, and periodic inservice operation were performed after installation to verify and assure functional ability of the valves. To the extent practicable, functional tests are performed after installation to verify that the valve will open and/or close in a time consistent with required safety functions.

(8) Active Category I valves are designed using either stress analyses or the pressure containing minimum wall thickness requirements. An analysis of the extended structure is performed for static equivalent seismic loads applied at the center of gravity of the extended structure. The maximum stress limits allowed in these analyses confirms structural integrity and were the limits developed and accepted by the ASME for the particular ASME class of valve analyzed. The stress limits used for active Class 2 and 3 valves are given in Table 3.9-19. Class 1 valves were designed according to the rules of the ASME Boiler and Pressure Vessel Code, Section III, NB-3500.

(9) Representative active Category I valves of each design type with overhanging structures (i.e., motor or pneumatic operator) were tested for verification of operability during a simulated seismic event by demonstrating operational capabilities within specified limits. The testing is conducted on a representative number of valves. Valves from each of the primary safety-related design types (e.g., motor- operated gate valves) were tested. Valve sizes which cover the range of sizes in service were qualified by the tests and the results were used to qualify all valves within the intermediate range of sizes. Stress and deformation analyses are used to support the interpolation.

The valve was mounted in a manner which is conservatively representative of a typical plant installation. The valve includes the operator and all appurtenances normally attached to the valve in service. The operability of the valve during a seismic event was verified by satisfying the following requirements:

(a) All active valves are designed to have a first natural frequency which is greater than 33 Hz if practical to do so. This may be shown by suitable test or analysis.

If the lowest natural frequency of an active valve is less than 33 Hz, the valve's mathematical model is included in the piping dynamic analysis. This assures the calculated valve acceleration does not exceed the values used in the static tests of the manufacturers qualification program and reflects the proper valve dynamic behavior.

(b) The actuator and yoke of the valve system were statically loaded an amount greater than that determined by an analysis as representing the applicable seismic accelerations applied at the center of gravity of the operator alone in the direction of the weakest axis of the yoke. The design pressure of the valve is simultaneously applied to the valve during the static deflection tests.

(c) The valve was then operated while in the deflected position, i.e., from the normal operating mode to the faulted operating mode. The valve performed its safety-related function within the specified operating time limits.

(d) Motor operators and other electrical appurtenances necessary for operation were qualified as operable during the seismic event by analysis and/or testing in accordance with the requirements of IEEE Standards 344 (refer to Section 3.9.2.2 for the applicable edition).

The accelerations used for the static valve qualification are 3.0 g horizontal and 2.0 g vertical with the valve yoke axis vertical. The piping designer shall maintain the motor operator accelerations to equivalent levels. If the valve accelerations exceed these levels, an evaluation of the valve is performed to document acceptability on a case-by-case basis.

If the frequency of the valve, by test or analysis, was less than 33 Hz, a dynamic analysis of the valve was performed to determine the equivalent acceleration to be applied during the static test. The analysis provided the amplification of the input acceleration considering the natural frequency of the valve and piping along with the frequency content of the applicable plant floor response spectra. The adjusted accelerations were determined using the same conservatism contained in the accelerations used for "rigid" valves. The adjusted accelerations were then used in the static analysis and the valve operability was assured by the methods outlined in steps (b), (c), and (d) above using the modified acceleration input.

(10) The design of each active Category I check valve was such that once the structural integrity of the valve was assured using standard design or analysis methods, the ability of the valve to operate was assured by the design features. In addition to design considerations, each active check valve undergoes:

(a) Stress analysis including the applicable seismic loads

(b) In-shop hydrostatic tests for parts that could affect the operability of the valve,

(c) In-shop seat leakage tests, and

(d) Preoperational and periodic in-situ testing and inspection to assure functional ability of the valves.

(11) The design of the pressurizer safety valve (Category I) was such that once the structural integrity of the valves was assured using standard design or analysis methods, the ability of the valve to operate was assured by the design features. In addition to design considerations, the pressurizer safety valve was subjected to:

(a) Stress and/or deformation analyses for parts that could affect the operability of the valve for the applicable seismic loads,

(b) In-shop hydrostatic and seal leakage tests, and

(c) Periodic in-situ valve inspection.

In addition to these tests, a static load equivalent to the seismic load was applied to the top of the bonnet and the pressure was increased until the valve mechanism actuated. Successful actuation within the design requirements of the valve has been demonstrated.

(12) Wherever practicable, prototype test and analytical results are utilized to assure functional adequacy of active Category I pumps and valves and their appurtenances.

3.9.3.3 Design and Installation Details for Mounting of Pressure Relief Devices

The design and installation of pressure relieving devices are consistent with the requirements established by Regulatory Guide 1.67, "Installation of Overpressure Protective Devices."

Each main steam line is provided with one power operated atmospheric relief valve and five safety valves sized in accordance with ASME, B&PV, Section III.

The safety valves are set for progressive relief in intermediate steps of pressure within the allowed range (100% to 105% of the design pressure) of pressure settings to prevent more than one valve actuating simultaneously. The valve pressure settings at which the individual valves open are tabulated in Table 10.1-1 in the column identified as "Set Pressure." The valves are designed to reseat at the pressure values identified in the column "Blowdown Pressure."

Valves are connected to a rigidly supported common header that is in turn connected to the main steam piping through branch piping equal in size to the main steam piping. The header and valves are located immediately outside containment in the main steam valve building.

The safety valves are mounted on the header such that they produce torsion, bending, and thrust loads in the header during valve operation. The header has been designed to accommodate both dynamic and static loading effects of all valves blowing down simultaneously.

The stress produced by the following loading effects assumed to act concurrently are within the code allowable.

(1) Deadweight effects
(2) Thermal loads and movements
(3) Seismic loads and movements
(4) Safety valve thrust, moments, torque loading[1]
(5) Internal pressure

Note 1. The safety valve thrust loads are assumed to occur in the upset plant condition, and do not occur concurrently with an OBE.

The nozzles connecting each valve to the header are analyzed to assure that for both dynamic and static loading situations, the stresses produced in the nozzle wall are within the code allowable for the same loading consideration as the header.

The safety valves and power-operated atmospheric relief valves are Seismic Category I components. They have been seismically qualified by analyses per criteria presented in Section 3.7.3.16 and Table 3.9-19.

Pressure relief valves in auxiliary safety related systems have been installed considering loads carried in the support members produced by:

(1) Deadweight of valve and appurtenances,
(2) Thermal effects,
(3) Seismic effects,
(4) Maximum valve thrust, moment, and torque loading effects, and
(5) Internal pressure.

Relief valves that discharge to the atmosphere are either rigidly supported by their own individual support, or the nozzle and component to which the valve is attached (vessel, tank, or pipe) has been designed to carry the valve static and dynamic loads. Individual supports have been designed to stress levels in accordance with Section 3.9.3.4.2. Stresses in nozzles and components produced by the valve loads considered above are determined per the method delineated in Welding Research Council Bulletin No. 107 or equivalent and are combined with normal loading operational loads for the component. Relief valves blowing down is considered as an upset loading condition for the plant. Therefore, the allowable stress intensity for the component supporting the valve loads is in accordance with those tabulated in Tables 3.9-2, 3.9-8, 3.9-9, or 3.9-14, as applicable.

Loading associated with relief valves discharging through piping components to a collector tank are analyzed considering the surge effects of the initial discharge through the pipe. This condition is considered as an upset loading condition for the piping components connecting to the valve and the allowable stress intensity is in accordance with those for piping components tabulated in Tables 3.9-8 and 3.9-9.

Pressure relief valves and pertinent operating information for the valves that have been considered in the installation requirements of the valve are tabulated in Table 3.9-20.

As related to the design and installation criteria of pressure relieving devices, Westinghouse interfaces with TVA by providing the following:

(1) Overpressure Protection Report[13]. This report documents the compliance for overpressure protection requirements as per the ASME Boiler and Pressure Vessel Code, Section III, NB-7300 and NC-7300, and provides the maximum relieving requirements.

(2) Mounting brackets on the pressurizer. These brackets can be used as structural supports, if needed.

(3) Criteria and guidelines. Supplementary criteria specifically applicable to the design and fabrication of nuclear plant safety and relief valve installations are provided.

(4) Review of system layout and resultant loads for acceptability, where applicable.

3.9.3.4 Component Supports

3.9.3.4.1 Subsystem and Component Supports Analyzed or Specified by Westinghouse

(1&2) The criteria for Westinghouse supplied supports for ASME Code Class 1 Mechanical Equipment is presented in Section 5.2.1.10.7.

(3) ASME Code - Class 2 and 3 supports are designed as follows:

(A) Linear

(a) Normal - The allowable stresses of AISC-69 Part 1, a reference basis for Subsection NF of ASME Section III, are employed for normal condition limits.

(b) Upset - Stress limits for upset conditions are the same as normal condition stress limits. This is consistent with Subsection NF of ASME Section III (see NF-3320).

(c) Emergency - For emergency conditions, the allowable stresses or load ratings are 33% higher than those specified for normal conditions. This is consistent with Subsection NF of ASME Section III in which (see NF-3231) limits for emergency conditions are 33% greater than the normal condition limits.

(d) Faulted - Section 5.2.1.10 specifies limits which assure that no large plastic deformations will occur (stress $\leq 1.2S_y$). If any inelastic behavior is considered in the design, detailed justification is provided for this limit. Otherwise, the supports for active components are designed so that stresses are less than or equal to S_y. Thus the operability of active

components is not endangered by the supports during faulted conditions.

Welding was in accordance with the American Welding Society, (AWS) "Structural Welding Code," AWS D1.1, with revisions 1-73 and 1-74, except later editions may be used for prequalified joint details, base materials, and qualification of welding procedures and welders. Nuclear Construction Issues Group documents NCIG-01 and NCIG-02 may be used after June 26, 1985, for weldments that were designed and fabricated to the requirements of AISC/AWS. Visual inspection of structural welds will meet the minimum requirements of NCIG-01 and NCIG-02 as specified on the design drawings or other design output. Inspectors performing visual examination to the criteria of NCIG-01 are trained in the subject criteria.

(B) Plates and Shells

The stress limits used for ASME Class 2 and 3 plate and shell component supports are identical to those used for the supported component. These allowed stresses are such that the design requirements for the components and the system structural integrity are maintained.

For active Class 2 or 3 pumps, support adequacy was proven by satisfying the criteria in Section 3.9.3.2.1. The requirements consist of both stress analysis and an evaluation of pump/motor support misalignment.

Active valves are, in general, supported only by the pipe attached to the body. Exterior supports on the valve are not used.

3.9.3.4.2 Subsystem and Component Supports Analyzed or Specified by TVA

(1) ASME Code Class 1, 2, and 3 Piping Supports

(a) Loading Conditions

The following conditions have been assigned for support load evaluation for Watts Bar Nuclear Plant support design (not including pipe whip restraints): normal, upset, emergency, faulted, and test condition. The piping support design loads and combinations are given in Table 3.9-13A.

(b) Support Types, Loading Combinations, Stress Limits, and Applicable Codes

(1) Linear Supports

The allowed stresses are defined in Table 3.9-21. The load combinations and allowable stresses are based on and exceed the requirements of NRC

Regulatory Standard Review Plan, Section 3.9.3. The design load is determined by the condition yielding the most conservative support design.

Welding was in accordance with the American Welding Society, (AWS) "Structural Welding Code," AWS D1.1 with revisions 1-73 and 1-74, except later editions may be used for prequalified joint details, base materials, and qualification of welding procedures and welders. Nuclear Construction Issues Group documents NCIG-01 and NCIG-02 may be used after June 26, 1985, for weldments that were designed and fabricated to the requirements of AISC/AWS. Visual inspection of structural welds will meet the minimum requirements of NCIG-01 and NCIG-02 as specified on the design drawings or other design output. Inspectors performing visual examination to the criteria of NCIG-01 are trained in the subject criteria.

(2) Standard Support

The allowable stresses are defined in Table 3.9-21. The load combinations consider all applicable load sources which induce load into the appropriate type support. The design conforms to the requirements of MSS-SP-58, 1967 edition or ASME Boiler and Pressure Vessel Code, Section III, subsection NF.

(3) Pre-engineered Support Element

Pre-engineered support elements are defined as standard hardware items such as rods, clamps, clevises, and struts used in the installation of either a linear support or a standard support component.

The design load is determined from the tabulated loads described above for the linear or standard support component. The allowable stresses are given in Table 3.9-21.

(c) General Design Requirements

(1) The gravitational or actual loads are considered to consist of pipe, fittings, pipe covering, contents of pipe systems, and valves.

(2) All thermal modes of operation are considered in load evaluation. Thermal loads are not considered to relieve primary loads induced by gravity, other sustained loads, or seismic events.

(3) Installation tolerances are not considered a source of load reduction unless special installation requirements are required.

(4) The required movement in unrestrained directions for the line being supported is tabulated in the table of support loads. The support design is arranged to accommodate this required movement of the piping. Hangers are designed in such a manner that they cannot become disengaged by any movement of the supported pipe.

(5) If ASME Code Case N-318-3 is used in the design of integral welded attachments to the piping pressure boundary, the requirements of Regulatory Guide 1.84 are documented in TVA calculations.

(d) Deformation Limits

Pipe support stiffness/deflection limitations are required for seismic Category I.

The following criteria are used for support stiffness requirements:

(1) All pipe support structural steel, except as described below, was designed to limit the maximum deflection to 0.0625" (based on the greater of the seismic/dynamic load components of the upset or faulted loading conditions, or based on the minimum design load). In addition, the maximum deflection is limited to 0.125" (based on the total design load). These analyses were performed independently for each restrained direction (axis) at the point of load application.

(2) The first dynamic support in each lateral direction adjacent to strain sensitive equipment (i.e., pump, compressor or turbine nozzle) is designed to limit the maximum deflection to 0.0625" (based on the total design load). This analysis was performed independently for each restrained direction (axis) at the point of load application.

(3) Except for the unbraced cantilevers, baseplate rotation or deflection due to baseplate flexibility are considered insignificant and, therefore, are not considered. Anchor bolt stiffness is not considered for this evaluation.

(4) For supports with a common member (i.e., gang supports) the deflection at the point under consideration due to the simultaneous application of each pipe's dead weight and thermal loads added algebraically are evaluated to determine the maximum deflection for both the hot and cold pipe conditions. The deflection at the point under consideration resulting from the simultaneous application of each pipe's dynamic loads is determined by SRSS method. The total deflection due to dead weight plus thermal, and dynamic loads is evaluated based on absolute summation of the two deflections calculated above.

(5) Support components carrying load primarily in axial tension or compression meet the requirements for stiffness without further evaluation. Also, the stiffness/deflection limitations do not apply in the unrestrained support direction (i.e., due to friction loads).

(6) Component standard support elements are considered rigid and therefore, no stiffness/deflection evaluation is necessary except as provided in approved design standards.

(7) Higher deflection limits may be used if justified on a case-by-case basis.

(e) Considerations for the Faulted Condition

Table 3.9-21 identifies the allowed stresses associated with the faulted condition. The faulted load conditions, represented by postulated pipe whip and jet impingement, were evaluated as described in Section 3.6 for all systems, piping, equipment, and structures shown on issued TVA drawings. Piping, systems, pipe supports and other structures that are the targets of postulated pipe whip or jet impingement may require protection to assure safe plant shutdown. This protection is provided by evaluation on a case-by-case basis.

For evaluation of field routed piping or other field located equipment a different method was used. For these cases, a minimum allowable separation method is used for screening piping systems, conduit, and instrument lines to assure that adequate separation exists between these systems and postulated breaks or through-wall leakage cracks in fluid piping. Where adequate separation is not available, piping is relocated, supports were strengthened, supports added, or mitigative devices are provided to prevent unacceptable loads.

Piping and supports subjected to a jet force from a break in piping of equal or less nominal size and wall thickness are assumed to receive no unacceptable damage, provided the target piping and supports were designed in accordance with accepted codes; i.e. ASME Section III, ANSI B31.1, AISC, etc.

(f) Results

The design information for pipe supports of systems analyzed by TVA was tabulated on tables of support design loads and included in the problem file as indicated in Section 3.9.3.1.2.

(2) Mechanical Equipment and Component Supports

TVA-designed supports for Category I equipment and components satisfy the AISC allowable stress limits described in Section 3.8.4.5.2 and the stiffness requirements described in Section 3.7.3.16.5. Valve actuator supports were designed as pipe supports. Valve actuator tiebacks have special stiffness requirements to limit valve extended, structure stresses under load.

Vendor-supplied equipment and component supporting structures that were provided as part of the equipment assembly, were seismically qualified as

part of the equipment package. This qualification is described in Section 3.9.3.1.2.

3.9.4 Control Rod System

3.9.4.1 Descriptive Information of CRDS

Refer to Section 4.2.3.

3.9.4.2 Applicable CRDS Design Specifications

Refer to Sections 4.2.3.1.4 and 4.2.3.2.2.

3.9.4.3 Design Loadings, Stress Limits, and Allowable Deformations

Refer to Section 4.2.3.3.1.

3.9.4.4 CRDS Performance Assurance Program

Refer to Section 4.2.3.4.2.

3.9.5 Reactor Pressure Vessel Internals

3.9.5.1 Design Arrangements

For verification that changes in design from those in previously licensed plants of similar design do not affect the flow-induced vibration behavior, refer to Section 3.9.2.3.

3.9.5.2 Design Loading Conditions

Refer to Section 4.2.2.3.

3.9.5.3 Design Loading Categories

Refer to Section 4.2.2.4.

3.9.5.4 Design Criteria Basis

Refer to Section 4.2.2.5.

3.9.6 Inservice Testing of Pumps and Valves

Inservice testing of ASME Code Class 1, 2, and 3 pumps and valves will be conducted to the extent practical in accordance with the latest edition and addenda of the ASME OM Code incorporated by reference in 10 CFR 50.55a(b) on the date 12 months before the date of issuance of the operating license for Unit 2, as required by 10 CFR 50.55a(f). Since the Watts Bar piping systems were designed before the Code was issued, some valves and pump parameters cannot be tested in accordance with the ASME OM Code. These exceptions have been noted in the Inservice Testing program submittal made to NRC.

The following safety-related pumps will be tested:

(1) Centrifugal Charging Pumps
(2) Safety Injection Pumps
(3) Residual Heat Removal Pumps
(4) Containment Spray Pumps
(5) Component Cooling System Circulation Pumps
(6) Auxiliary Feedwater Pumps
(7) Essential Raw Cooling Water Pumps
(8) Boric Acid Transfer Pumps
(9) ERCW Screenwash Pumps
(10) Main Control Room Chilled Water Pumps
(11) Electrical Board Room Chilled Water Pumps
(12) Shutdown Board Room Chilled Water Pumps

Table 3.9-26 is a tabulation of the various category valves in each of the systems.

REFERENCES

(1) "Documentation of Selected Westinghouse Structural Analysis Computer Codes", WCAP-8252, April 1977.

(2) WCAP-8317-A, "Prediction of the Flow-Induced Vibration of Reactor Internals by Scale Model Tests," March 1974.

(3) WCAP-8517, "UHI Plant Internals Vibration Measurement Program and Pre and Post Hot Functional Examinations," March 1975.

(4) WCAP-7879, "Four Loop PWR Internals Assurance and Test Program," July 1972.

(5) Trojan Final Safety Analysis Report, Appendix A-12.

(6) Fabic, S., "Description of the BLODWN-2 Computer Code," WCAP-7918, Revision 1, October 1970.

(7) Fabic, S., "Computer Program WHAM for Calculation of Pressure Velocity, and Force Transients in Liquid Filled Piping Networks, "Kaiser Engineers Report No. 67-49-R, November 1967.

(8) Bohn, G. J., "Indian Point Unit No. 2 Internals Mechanical Analysis for Blowdown Excitation," WCAP-7332-AR-P. November, 1973 (Proprietary) and WCAP-7822-AR, November, 1973 (Non-Proprietary)

(9) Bohm, G. J. and LaFaille, J. P., "Reactor Internals Response Under a Blowdown Accident," First Intl. Conf. on Structural Mechanics in Reactor Technology, Berlin, September 20-24, 1971.

(10) "Bench Mark Problem Solutions Employed for Verification of WECAN Computer Program", WCAP-8929, June 1977.

(11) WCAP-11627, "Upflow Conversion Safety Evaluation Report - Watts Bar Units 1 & 2," September 1987.

(12) Letter from Peter S. Tam, NRC, to M. O. Medford, TVA, "Watts Bar Nuclear Plant - Upflow Conversion Modification to Reactor Internals (TAC M85802 & M85803)", dated July 28, 1993.

(13) WCAP-7769, "Topical Report Overpressure Protection for Westinghouse Pressurized Water Reactors," Rev. 1, June, 1972.

(14) WCAP-8708-PA (Westinghouse Proprietary), WCAP-8709-A (Non-Proprietary), "MULTIFLEX A FORTRAN Computer Program for Analyzing Thermal-Hydraulic Structure System Dynamics," Takeuchi, K., et al., September 1977.

(15) WCAP-15029-P-A/WCAP-15030-NP-A, "Westinghouse Methodology for Evaluating the Acceptability of Baffle-Former-Barrel Bolting Distribution Under Faulted Load Conditions," R. E. Schwirian, et al., January 1999.

(16) WCAP-15245 (Proprietary)/WCAP-15246 (Non-Proprietary), "Control Rod Insertion Following a Cold Leg LBLOCA, D. C, Cook Units 1 and 2," J. A. Barsic, D. C. Garner, Y. C. Lee, K. B. Neubert, C. Yu, February 28, 1999.

(17) WCAP-11004-P/WCAP-11005 (NP), "Comparison of DATA for Beaver Valley Power Station Unit 2 with WCAP-9735 Data, Prepared for NRC Review in Conjunction with Review of WCAP-9735, Docket No. 50-412," D. R. Bhandari, K. Takeuchi, M. E. Wills, November 1985.

(18) WCAP-11522 (Proprietary)/WCAP-11523 (Non-Proprietary), "Response to NRC Questions on the LOCA Hydraulic Forces Analysis of the Beaver Valley Power Station Unit 2, Prepared for NRC Review in Conjunction with Review of WCAP-9735, Docket No. 50-412," D. C. Garner, M. P. Kachmar, M. R. Wengerd, June 1987.

(19) "Benchmark Problem Solutions Employed for Verification of the WECAN Computer Program," WCAP-8929, June 1977.

(20) Fritz, R. J., "The Effects of Liquids on the Dynamic Motions of Immersed Solids," Trans. ASME, Journal of Engineering for Industry, 1972, pp. 167–173.

(21) WCAP-5890, Revision 1, "Ultimate Strength Criteria to Ensure No Loss of Function of Piping and Vessel Under Seismic Loading," October 1967.

(22) WCAP-15102 Volume 2, "Electricite de France 1300 Mwe Plants Reactor Internals Functional Criteria," December 1997.

(23) WCAP-7332-L-AR, "Topical Report - Indian Point Unit 2 Reactor Internals Mechanical Analysis for Blowdown Excitations," November 1973.

Table 3.9-1 Design Loading Combinations For ASME Code Class 2 And 3 Components And Supports Analyzed By Westinghouse, (Excluding Pipe Supports) (A)

Condition Classification	Loading Combination (B, C)
Design and Normal	Design pressure Design temperature, Dead weight, nozzle loads
Upset	Upset condition pressure, Upset condition metal temperature, deadweight, OBE, nozzle loads
Emergency	Emergency condition pressure, emergency condition metal temperature, deadweight, nozzle loads
Faulted	Faulted condition pressure, faulted condition metal temperature, deadweight, SSE, nozzle loads

(A)The responses for each loading combination are combine using the absolute sum method. On a case-by-case basis, algebraic summation may be used when signs are known for final design evaluations.

(B)Temperature is used to determine allowable stress only.

(C)Nozzle loads are those loads associated with the particular plant operating conditions for the component under consideration.

Revised by Amendment 45

Table 3.9-2 Stress Criteria For Safety Related Asme Class 2 And 3 Tanks Analyzed By Westinghouse

Condition	Stress Limits
Design and Normal	$\sigma_m \leq 1.0$ S
	$(\sigma_m$ or $\sigma_L) + \sigma_b \leq 1.5$ S
Upset	$\sigma_m \leq 1.1$ S
	$(\sigma_m$ or $\sigma_L) + \sigma_b \leq 1.65$ S
Emergency	$\sigma_m \leq 1.5$ S
	$(\sigma_m$ or $\sigma_L) + \sigma_b \leq 1.8$ S
Faulted	$\sigma_m \leq 2.0$ S
	$(\sigma_m$ or $\sigma_L) + \sigma_b \leq 2.4$ S

Table 3.9-3 Stress Criteria for Category I ASME Code Class 2 and Class 3 Nonactive Pumps and Pump Supports Analyzed by Westinghouse

Condition	Stress Limits*	P_{max}**
Design and Normal	$\sigma_m \leq 1.0$ S	1.0
	$(\sigma_m$ or $\sigma_L) + \sigma_b \leq 1.5$ S	
Upset	$\sigma_m \leq 1.1$ S	1.1
	$(\sigma_m$ or $\sigma_L) + \sigma_b \leq 1.65$ S	
Emergency	$\sigma_m \leq 1.5$ S	1.2
	$(\sigma_m$ or $\sigma_L) + \sigma_b \leq 1.80$ S	
Faulted	$\sigma_m \leq 2.0$ S	1.5
	$(\sigma_m$ or $\sigma_L) + \sigma_b \leq 2.4$ S	

*Stress limits are taken from ASME III, Subsections NC and ND, or, for pumps procured prior to the incorporation of these limits into ASME III, from Code Case 1636-1.

**The maximum pressure shall not exceed the tabulated factors listed under P_{max} times the design pressure.

Table 3.9-4 Stress Criteria For Safety Related ASME Code Class 2 and Class 3 Valves Analyzed by Westinghouse

Condition	Stress Limits (Notes 1-6)	P_{max} (Note 7)
Design & Normal	Valve bodies shall conform to the requirements of ASME Section III, NC-3500 (or ND-3500)	
Upset	$\sigma_m \leq 1.1$ S $(\sigma_m$ or $\sigma_L) + \sigma_b \leq 1.65$ S	1.1
Emergency	$\sigma_m \leq 1.5$ S $(\sigma_m$ or $\sigma_L) + \sigma_b \leq 1.80$ S	1.2
Faulted	$\sigma_m \leq 2.0$ S $(\sigma_m$ or $\sigma_L) + \sigma_b \leq 2.4$ S	1.5

Notes:

1. Valve nozzle (piping load) stress analysis is not required when both the following conditions are satisfied by calculation: (1) section modulus and area of a plane, normal to the flow, through the region of valve body crotch is at least 10% greater than the piping connected (or joined) to the valve body inlet and outlet nozzles; and, (2) code allowable stress, S, for valve body material is equal to or greater than the code allowable stress, S, of connected piping material. If the valve body material allowable stress is less than that of the connected piping, the valve section modulus and area as calculated in (1) above shall be multiplied by the ratio of S pipe/S valve. If unable to comply with this requirement, the design by analysis procedure of NB–3545.2 is an acceptable alternate method.

2. Casting quality factor of 1.0 shall be used.

3. These stress limits are applicable to the pressure retaining boundary, and include the effects of loads transmitted by the extended structures, when applicable.

4. Design requirements listed in this table are not applicable to valve discs, stems, seat rings, or other parts of valves which are contained within the confines of the body and bonnet, or otherwise not part of the pressure boundary.

5. These rules do not apply to Class 2 and 3 safety relief valves. Safety relief valves are designed in accordance with ASME Section III requirements.

6. Stress limits are taken from ASME III, Subsections NC and ND, or, for valves procured prior to the incorporation of these limits into ASME III, from Code Case 1635-1.

7. The maximum pressure resulting from upset, emergency or faulted conditions shall not exceed the tabulated factors listed under P_{max} times the design pressure or the rated pressure at the applicable operating condition temperature. If the pressure rating limits are met at the operating conditions, the stress limits in Table 3.9-4 are considered to be satisfied.

Table 3.9-5 Maximum Deflections Under Design Basis Event (in)[1,2,3,4]

		Allowable Limit	No Loss-of-Function Limit
Upper Barrel, Expansion/Compression (to ensure sufficient inlet flow area/ and to prevent the barrel from touching any guide tube to avoid disturbing the rod cluster control guide structure)	Inward	4.1	8.2
	Outward	1.0	1.0
Upper Package, Axial Deflection (to maintain the control rod guide structure geometry)[3,4]		0.100*	0.150
Rod Cluster Control Guide Tube Deflection As a Beam (to be consistent with conditions under which ability to trip has been tested)[4]		1.0	1.75
Fuel Assembly Thimbles Cross-Section Distortion (to avoid interference between the Control Rods and the guides)[4]		0.036	0.072

Notes

1. The allowable limit deflection values given above correspond to stress levels for internals structure well below the limiting criteria give by the collapse curves in WCAP-5890.[21] Consequently, for the internals the geometric limitations established to ensure safe shutdown capability are more restrictive than those given by the failure stress criteria.

2. All dimensions in inches

3. See Reference [22].

4. See Reference [23].

*Only to assure that the plate will not touch a guide tube.

Table 3.9-6 Design Criteria For Active Pumps And Pump Supports Analyzed By Westinghouse

Condition	Design Criteria[1]
Design, Normal and Upset	$\sigma_m \leq 1.0\ S$ $\sigma_m + \sigma_b \leq 1.5\ S$
Emergency	$\sigma_m \leq 1.2\ S$ $\sigma_m + \sigma_b \leq 1.65\ S$
Faulted	$\sigma_m \leq 1.2\ S$ $\sigma_m + \sigma_b \leq 1.8\ S$

Note:

(1)The stress limits specified for active pumps are more restrictive than the ASME III limits, to provide assurance that operability will not be impaired for any operating condition.

Table 3.9-7 Load Sources

Load	Description
BUILDING SETTLEMENT	Predicted or Measured Settlement of the Building
DBA	Design Basis Accident Loading
DEADWEIGHT	Weight of Pipe, Insulation, and Fluid
FLUID TRANSIENTS	Transient Loads Due to Valve Operation, Water Hammer
LOCA	Reactor Coolant Loop Movements Due to Loss of Coolant Accident
OBE	Operating Basis Earthquake
PRESSURE	Internal (or External) Pressure in Pipe
SAM	Seismic Anchor Motions
SSE	Safe Shutdown Earthquake
THERMAL	Operating Temperature, Environmental Temperature, Thermal Anchor Movements
VALVE THRUST	Relief Valve Discharge Thrust Loads
PIPE RUPTURE	Jet Impingement and Pipe Whip Loads

Table 3.9-8 Loading Constituents And Stress Limits for ASME Class 1 Piping (Sheet 1 of 2)

CONDITION	LOADING CONSTITUENTS[1]	STRESS LIMIT	NB-3650 EQUATION[2]	NOTES
PRIMARY STRESS				
DESIGN (Normal & Upset)	PRESSURE, DEADWEIGHT, OTHER SUSTAINED LOADS, OBE INERTIA, VALVE THRUST, FLUID TRANSIENTS	$1.5S_m$	9	
EMERGENCY	PRESSURE, DEADWEIGHT, OTHER SUSTAINED LOADS, OBE INERTIA, VALVE THRUST, FLUID TRANSIENTS	$2.25S_m$	9	
FAULTED	PRESSURE, DEADWEIGHT, OTHER SUSTAINED LOADS, SSE INERTIA, VALVE THRUST, FLUID TRANSIENTS, DBA INERTIA, LOCA, PIPE RUPTURE	$3.0S_m$	9	5
PRIMARY AND SECONDARY STRESS				
NORMAL & UPSET	PRESSURE, THERMAL, THERMAL ANCHOR MOVEMENT, THERMAL LINEAR GRADIENT, THERMAL DISCONTINUITY, VALVE THRUST, FLUID TRANSIENT, OBE, OBE SAM	$3.0S_m$	10	3
	PRESSURE, THERMAL, THERMAL ANCHOR MOVEMENT, THERMAL NONLINEAR GRADIENT, THERMAL LINEAR GRADIENT, THERMAL DISCONTINUITY, VALVE THRUST, FLUID TRANSIENT, OBE, OBE SAM		11	4,8
	THERMAL, THERMAL ANCHOR MOVEMENTS	$3.0S_m$	12	3

Table 3.9-8 Loading Constituents And Stress Limits for ASME Class 1 Piping (Sheet 2 of 2)

CONDITION	LOADING CONSTITUENTS[1]	STRESS LIMIT	NB-3650 EQUATION[2]	NOTES
PRIMARY AND SECONDARY STRESS (continued)				
NORMAL & UPSET	PRESSURE, DEADWEIGHT, OTHER SUSTAINED LOADS, OBE INERTIA, VALVE THRUST, FLUID TRANSIENTS, THERMAL DISCONTINUITY	$3.0S_m$	13	3
TESTING				
	PRESSURE	$0.9S_y$		7,8
	PRESSURE, DEADWEIGHT, OTHER SUSTAINED LOADS	$1.35S_y$		
PRESSURE DESIGN		PRESSURE LIMITS		
DESIGN	DESIGN PRESSURE	P_a		6
UPSET	Max. Service PRESSURE	P_a		6
EMERGENCY	Max. Service PRESSURE	$1.5P_a$		6
FAULTED	Max. Service PRESSURE	$2.0P_a$		6

Notes

1. Loads which are not concurrent need not be combined.
2. All references are for ASME Code, Subsection NB for Class 1 piping.
3. If the requirements of equation 10 are not met, then the requirements of equations 12 & 13 must be met.
4. S_{alt} for all load sets are calculated per NB-3653.3 and then, the cumulative usage factor per NB-3653.4 and NB-3653.5. The cumulative usage factor shall not exceed 1.0.
5. The design measures taken to protect against pipe rupture loads and the evaluation of these loads is described in Section 3.6.
6. The maximum allowable internal pressure value P_a is calculated per NB-3640, 3655 and 3656.
7. The testing limits are per NB-3226.
8. If there are more than 10 hydrostatic, pneumatic or other tests, then such extra tests shall be included in the fatigue evaluation of the component.

Table 3.9-9 Loading Constituents And Stress Limits For Category I ASME Class 2 and 3 Piping (Sheet 1 of 2)

CONDITION	LOADING CONSTITUENTS[1]	STRESS LIMIT	NC-3652 EQUATION[2]	NOTES
NORMAL	PRESSURE, DEADWEIGHT, OTHER SUSTAINED LOADS	1.0 S_h	8	
UPSET	PRESSURE, DEADWEIGHT, OTHER SUSTAINED LOADS, OBE INERTIA, VALVE THRUST, FLUID TRANSIENTS	1.2S_h	9	4
EMERGENCY	PRESSURE, DEADWEIGHT, OTHER SUSTAINED LOADS, OBE INERTIA, VALVE THRUST, FLUID TRANSIENTS	1.8S_h	9	
FAULTED	PRESSURE, DEADWEIGHT, OTHER SUSTAINED LOADS, SSE INERTIA, VALVE THRUST, FLUID TRANSIENTS, DBA INERTIA, LOCA, PIPE RUPTURE	2.4S_h	9	5
SECONDARY EXPANSION	THERMAL, OBE SAM	S_A	10	3,4
PRESSURE + SUSTAINED + EXPANSION	PRESSURE, DEADWEIGHT, OTHER SUSTAINED LOADS, THERMAL, OBE SAM	S_A+S_h	11	3,4
ONE TIME SECONDARY	BUILDING SETTLEMENT, DBA SCV MOVEMENT	3.0S_c	10A	
	COLD SPRING	0.5 (S_A+S_h)	NA	
TEST	PRESSURE, DEADWEIGHT, OTHER SUSTAINED LOADS	1.2S_h	NA	
TEST	PRESSURE, DEADWEIGHT, THERMAL, OTHER SUSTAINED LOADS	S_A+S_h	NA	

Table 3.9-9 Loading Constituents And Stress Limits For Category I ASME Class 2 and 3 Piping (Sheet 2 of 2)

Notes

1. Loads which are not concurrent need not be combined.

2. All references are for ASME Code, Subsection NC for Class 2 piping. The corresponding equations in ASME Code Subsection ND for Class 3 should be used as applicable.

3. The requirements of either Equation 10 or Equation 11 must be met.

4. The effects of OBE Seismic Anchor Movements may be excluded from Equations 10 and 11 if they are included in Equation 9U.

5. The design measures taken to protect against pipe rupture loads and the evaluation of these loads is described in Section 3.6.

Table 3.9-10 Loading Constituents And Stress Limits for Active Valve Evaluation

LOADING CONSTITUENTS(1)	STRESS LIMIT(3)
PRESSURE, DEADWEIGHT, OTHER SUSTAINED LOADS, THERMAL, SSE INERTIA, SSE SAM, VALVE THRUST, FLUID TRANSIENTS, DBA INERTIA, LOCA, PIPE RUPTURE(2)	$0.76S_y$(4) $1.0S_y$(4) (for swing check valves)

Notes

(1) Loads which are not concurrent need not be combined.

(2) The design measures taken to protect against pipe rupture loads and the evaluation of these loads are described in Section 3.6.

(3) The stress is calculated using the section modulus of the attached pipe.

(4) The value of pipe yield stress, S_y, in this table is determined from the code of record for piping analysis (reference Section 3.7.3.8.1).

Table 3.9-11 Deleted by Amendment 64

Table 3.9-12 Deleted by Amendment 64

Table 3.9-13A Design Loads For Category I Piping Supports

CONDITION	LOADING CONSTITUENTS[1]	NOTES
NORMAL	DEADWEIGHT, OTHER SUSTAINED LOADS, THERMAL, COLD SPRING, BUILDING SETTLEMENT	
UPSET	DEADWEIGHT, OTHER SUSTAINED LOADS, THERMAL, OBE INERTIA, OBE SAM, VALVE THRUST, FLUID TRANSIENTS, COLD SPRING	
EMERGENCY	DEADWEIGHT, OTHER SUSTAINED LOADS, THERMAL, OBE INERTIA, OBE SAM, VALVE THRUST, FLUID TRANSIENTS, COLD SPRING	
FAULTED	DEADWEIGHT, OTHER SUSTAINED LOADS, THERMAL, SEE INERTIA, SSE SAM, VALVE THRUST, FLUID TRANSIENTS, DBA INERTIA, LOCA, PIPE RUPTURE, COLD SPRING	2
TEST	DEADWEIGHT, OTHER SUSTAINED LOADS, THERMAL, COLD SPRING	

Notes:

1. Loads which are not concurrent need not be combined.

2. The design measures taken to protect against pipe rupture loads and the evaluation of these loads is described in Section 3.6.

Table 3.9-13B Design Loading Combinations For Category I ASME Code Class 2 and 3 Line-Mounted* Components And Component Supports Analyzed by TVA**

Condition Classification	Loading Combination
Design and Normal	Design pressure Design temperature* Dead weight, nozzle loads**, Operating Loads
Upset	Upset condition pressure, Upset condition metal temperature*, deadweight, OBE, nozzle loads**, Operating Loads
Emergency	Emergency condition pressure, emergency condition metal temperature*, deadweight, OBE, nozzle loads**, Operating Loads
Faulted	Faulted condition pressure, faulted condition metal temperature*, deadweight, SSE, nozzle loads**, Operating Loads, DBA

*Temperature is used to determine allowable stress only.

**Nozzle loads are those loads associated with the particular plant operating conditions for the component under consideration.

***Line-mounted component (valve) design load combinations correspond to the attached piping load combinations for normal, upset, emergency, and faulted conditions.

Table 3.9-14 Stress Criteria for Category I ASME Class 2 and Class 3 Tanks Analyzed by TVA

Condition	Stress Limits(1)	P_{max}(2)
Design and Normal	$P_m \leq 1.0\ S_h$ $(P_m \text{ or } P_L) + P_b \leq 1.5\ S_h$	1.0
Upset	$P_m \leq 1.1\ S_h$ $(P_m \text{ or } P_L) + P_b \leq 1.65\ S_h$	1.1
Emergency	$P_m \leq 1.5\ S_h$ $(P_m \text{ or } P_L) + P_b \leq 1.8\ S_h$	1.2
Faulted	$P_m \leq 2.0\ S_h$ $(P_m \text{ or } P_L) + P_b \leq 2.4\ S_h$	1.5
P_m, P_L, P_b, and S_h are as defined in Table 3.9-18.		

Notes

(1) The stress allowable values given above were permitted for design, evaluation, and modification activities. As an alternative, a simplified approach was also permitted. By the alternative approach, in addition to meeting the applicable design condition requirements, the tank was analyzed for the faulted condition and tank stresses were limited to 1.2 times the applicable ASME code design/normal condition primary stress allowables.

(2) The maximum pressure was not permitted to exceed the tabulated factors listed under P_{max} times the design pressure.

Table 3.9-15 Stress Criteria For Category I ASME Code Class 2 and Class 3 Nonactive Pumps Analyzed by TVA

Condition	Stress Limits(2)	P_{max}(1)
Design and Normal	$P_m \leq 1.0\ S_h$ $(P_m \text{ or } P_L) + P_b \leq 1.5\ S_h$	1.0
Upset	$P_m \leq 1.1\ S_h$ $(P_m \text{ or } P_L) + P_b \leq 1.65\ S_h$	1.1
Emergency	$P_m \leq 1.5\ S_h$ $(P_m \text{ or } P_L) + P_b \leq 1.8\ S_h$	1.2
Faulted	$P_m \leq 2.0\ S_h$ $(P_m \text{ or } P_L) + P_b \leq 2.4\ S_h$	1.5
P_m, P_L, P_b, and S_h are as defined in Table 3.9-18.		

Notes:

(1) The maximum pressure was not permitted to exceed the tabulated factors listed under P_{max} times the design pressure.

(2) The stress allowable values given above were permitted for design, evaluation, and modification activities. As an alternative, a simplified approach was permitted for pumps procured prior to September 1, 1974. By this alternative approach, in addition to meeting applicable ASME code design condition requirements, the pump was analyzed for the faulted condition and pump stresses were limited to 1.2 times the applicable ASME code design/normal condition primary stress allowables.

Table 3.9-16 Stress Criteria For Category I ASME Code Class 2 And Class 3 Nonactive Valves Analyzed By TVA

Condition	Stress Limits (Notes 1-6)	P_{max}(note 7)
Design and Normal	$P_m \leq S_h$ $(P_m \text{ or } P_L) + P_b \leq 1.5\ S_h$	1.0
Upset	$P_m \leq 1.1\ S_h$ $(P_m \text{ or } P_L) + P_b \leq 1.65\ S_h$	1.1
Emergency	$P_m \leq 1.5\ S_h$ $(P_m \text{ or } P_L) + P_b \leq 1.8\ S_h$	1.2
Faulted	$P_m \leq 2.0\ S_h$ $(P_m \text{ or } P_L) + P_b \leq 2.4\ S_h$	1.5
P_m, P_L, P_b, and S_h are as defined in Table 3.9-18.		

Notes:

1. Valve nozzle (Piping load) stress analysis is not required when both the following conditions are satisfied by calculation: (1) section modulus and area of a plane, normal to the flow, through the region of valve body crotch is at least 10% greater than the piping connected (or joined) to the valve body inlet and outlet nozzles; and, (2) code allowable stress, S, for valve body material is equal to or greater than the code allowable stress, S, to connected piping material. If the valve body material allowable stress is less than that of the connected piping, the valve section modulus and area as calculated in (1) above shall be multiplied by the ratio of S_{pipe}/S_{valve}. If unable to comply with this requirement, the design by analysis procedure of NB-3545.2 is an acceptable alternate method.
2. Casting quality factor of 1.0 shall be used.
3. These stress limits are applicable to the pressure retaining boundary, and include the effects of loads transmitted by the extended structures, when applicable. Non-pressure boundary components are evaluated against the stress limits of AISC or other justifiable reference. The 33% increase permitted by AISC for abnormal loads is applicable for upset, emergency and faulted conditions.
4. Design requirements listed in this table are not applicable to valve discs, stems, seat rings, or other parts of valves which are contained within the confines of the body and bonnet, or otherwise not part of the pressure boundary.
5. These rules do not apply to Class 2 and 3 safety relief valves. Safety relief valves are designed in accordance with ASME Section III requirements.
6. The stress allowable values given above were permitted for design, evaluation, and modification activities. As an alternative, a simplified approach was permitted for valves procured prior to September 1, 1974. By this alternative approach, in addition to meeting the applicable ASME code design condition requirements, the valve was analyzed or tested per IEEE 344-1971 requirements for the faulted condition. When qualified by analysis using this alternative, the valve stresses were limited to 1.2 times the applicable ASME code design/normal condition primary stress allowables and the valve extended structure stresses were limited to 1.33 times the AISC code normal stress allowables.
7. The maximum pressure resulting from upset or faulted conditions shall not exceed the tabulated factors listed under P_{max} times the design pressure or the rated pressure at the applicable operating condition temperature. If the pressure rating limits are met at the operating conditions, the stress limits in this table are considered to be satisfied.

Table 3.9-17 Active Valves for Primary Fluid Systems (Sheet 1 of 9)

System Name	TVA Valve No.	W Valve No.	Size Inches	Actuation	Type	Function/Description
Chemical and	FCV-62-61	8112	4	Motor	Gate	Containment Isolation
Volume	FCV-62-63	8100	4	Motor	Gate	Containment Isolation
Control	FCV-62-69	LCV-460	3	Air	Globe	Letdown Isolation
System (62)	FCV-62-70	LCV-459	3	Air	Globe	Letdown Isolation
	FCV-62-72	8149A	2	Air	Globe	Containment Isolation
	FCV-62-73	8149B	2	Air	Globe	Containment Isolation
	FCV-62-74	8149C	2	Air	Globe	Containment Isolation
	FCV-62-77	8152	2	Motor	Gate	Containment Isolation
	FCV-62-84	8145	3	Air	Globe	Aux Spray Isolation
	FCV-62-90	8105	3	Motor	Gate	ECCS Flowpath Integrity
	FCV-62-91	8106	3	Motor	Gate	ECCS Flowpath Integrity
	FCV-62-76	8306A	2	Air	Globe	Containment Isolation
	LCV-62-132	LCV-112B	4	Motor	Gate	CVCS Charging Pump Suction
	LCV-62-133	LCV-112C	4	Motor	Gate	CVCS Charging Pump Suction
	LCV-62-135	LCV-112D	8	Motor	Gate	CVCS Charging Pump Suction
	LCV-62-136	LCV-112E	8	Motor	Gate	CVCS Charging Pump Suction
	CKV-62-504	8546	8	Self Actuated	Check	CVCS Charging Pump Suction
	RFV-62-505	8124	¾	Self Actuated	Relief	CCP Suction Relief Valve
	CKV-62-507	---	1	Self Actuated	Check	CCP Suction Chem Feed Check Valve
	CKV-62-543[2]	8381	3		Check	Containment Isolation
	CKV-62-560[1]	8368A	2	Self Actuated	Check	Containment Isolation
	CKV-62-561[1]	8368B	2	Self Actuated	Check	Containment Isolation
				Self Actuated		

Table 3.9-17 Active Valves for Primary Fluid Systems (Sheet 2 of 9)

CKV-62-562[1]	8368C	2	Self Actuated	Check	Containment Isolation
CKV-62-563[1]	8368D	2	Self Actuated	Check	Containment Isolation
CKV-62-576	8367A	2	Self Actuated	Check	CCP Discharge Header Integrity
CKV-62-577	8367B	2	Self Actuated	Check	CCP Discharge Header Integrity
CKV-62-578	8367C	2	Self Actuated	Check	CCP Discharge Header Integrity
CKV-62-579	8367D	2	Self Actuated	Check	CCP Discharge Header Integrity
CKV-62-638	8557	3	Self Actuated	Check	Normal Charging Isolation
CKV-62-639		¾	Self Actuated	Check	Seal Water 1-FCV-62-61 Bypass
CKV-62-640	8556	3	Self Actuated	Check	Alternate Charging Isolation
RFV-62-649		2	Self Actuated	Relief	Seal Water Hx Relief Valve
CKV-62-659	8378	3	Self Actuated	Check	Normal Charging Isolation
CKV-62-660	8379	3	Self Actuated	Check	Alternate Charging Isolation
CKV-62-661	8377	3	Self Actuated	Check	Auxiliary Spray Isolation
CKV-62-525	8481A	4	Self Actuated	Check	Prevent Backflow thru Centrifugal Charging Pump
CKV-62-532	8481B	4	Self Actuated	Check	Prevent Backflow thru Centrifugal Charging Pump
FCV-62-1228	8870B	1	Air	Globe	Hydrogen vent header Isolation Valve
FCV-62-1229	8870A	1	Air	Globe	Hydrogen vent header Isolation Valve
RFV-62-662	8117	2	Self Actuated	Relief	Cntmt Isolation Thermal Relief
RFV-62-1221		¾	Self Actuated	Relief	CCP 1A-A Over Pressure
RFV-62-1222		¾	Self Actuated	Relief	CCP 1B-B Over Pressure

Table 3.9-17 Active Valves for Primary Fluid Systems (Sheet 3 of 9)

Safety Injection (63)	FCV-63-1	8812	14	Motor	Gate	Prevent Radioactive Release in Recirc Mode
	FCV-63-3	8813	2	Motor	Globe	Prevent Radioactive Release in Recirc Mode
	FCV-63-4	8814	2	Motor	Globe	Prevent Radioactive Release in Recirc Mode
	FCV-63-5	8806	8	Motor	Gate	Prevent Radioactive Release in Recirc Mode
	FCV-63-6	8807B	4	Motor	Gate	Sis Recirc Flowback Integrity
	FCV-63-7	8807A	4	Motor	Gate	Sis Recirc Flowback Integrity
	FCV-63-8	8804A	8	Motor	Gate	Sis Recirc Flowpath Integrity
	FCV-63-11	8804B	8	Motor	Gate	Sis Recirc Flowpath Integrity
	FCV-63-23	8888	1	Air	Globe	Containment Isolation
	FCV-63-25	8801B	4	Motor	Gate	ECCS Flowpath Integrity
	FCV-63-26	8801A	4	Motor	Gate	ECCS Flowpath Integrity
	FCV-63-47	8923A	6	Motor	Gate	ECCS Flowpath Integrity
	FCV-63-48	8923B	6	Motor	Gate	ECCS Flowpath Integrity

Table 3.9-17 Active Valves for Primary Fluid Systems (Sheet 4 of 9)

FCV-63-64	8880	1	Air	Globe	Containment Isolation
FCV-63-71	8871	3/4	Air	Globe	Containment Isolation
FCV-63-72	8811A	18	Motor	Gate	CNTMT Sump Isolation
FCV-63-73	8811B	18	Motor	Gate	CNTMT Sump Isolation
FCV-63-84	8964	3/4	Air	Globe	Containment Isolation
FCV-63-93	8809A	8	Motor	Gate	RHR Cold Leg Injection Line Isolation
FCV-63-94	8809B	8	Motor	Gate	RHR Cold Leg Injection Line Isolation
FCV-63-152	8821A	4	Motor	Gate	ECCS Flowpath Integrity
FCV-63-153	8821B	4	Motor	Gate	ECCS Flowpath Integrity
FCV-63-156	8802A	4	Motor	Gate	ECCS Flowpath Integrity
FCV-63-157	8802B	4	Motor	Gate	ECCS Flowpath Intgrity
FCV-63-172	8840	12	Motor	Gate	RHR Hot Leg Recirc
FCV-63-175	8920	¾	Motor	Globe	Prevent Radioactive Release in Recirc Mode
FCV-63-185	---	¾	Air	Globe	Leak Test Line Isolation
CKV-63-524	8922A	4	Self Actuated	Check	Prevent Backflow thru Nonoperating Train
CKV-63-526	8922B	4	Self Actuated	Check	Prevent Backflow thru Nonoperating Train
CKV-63-543	8905A	2	Self Actuated	Check	ECCS Flowpath Integrity/ RCS Press. Bound. Prot
CKV-63-545	8905C	2	Self Actuated	Check	ECCS Flowpath Integrity/ RCS Press. Bound. Prot
CKV-63-547	8905B	2	Self Actuated	Check	ECCS Flowpath Integrity/ RCS Press. Bound. Prot
CKV-63-549	8905D	2	Self Actuated	Check	ECCS Flowpath Integrity/ RCS Press. Bound. Prot
CKV-63-551	8819A	2	Self Actuated	Check	ECCS Flowpath Integrity/ RCS Press. Bound. Prot
CKV-63-553	8819B	2	Self Actuated	Check	ECCS Flowpath Integrity/ RCS Press. Bound. Prot

Table 3.9-17 Active Valves for Primary Fluid Systems (Sheet 5 of 9)

CKV-63-555	8819C	2	Self Actuated	Check	ECCS Flowpath Integrity/ RCS Press. Bound. Prot
CKV-63-557	8819D	2	Self Actuated	Check	ECCS Flowpath Integrity/ RCS Press. Bound. Prot
CKV-63-558	8949D	6	Self Actuated	Check	ECCS Flowpath Integrity/ RCS Press. Bound. Prot
CKV-63-559	8949B	6	Self Actuated	Check	ECCS Flowpath Integrity/ RCS Press. Bound. Prot
CKV-63-560	8948A	10	Self Actuated	Check	ECCS Flowpath Integrity/ RCS Press. Bound. Prot
CKV-63-561	8948B	10	Self Actuated	Check	ECCS Flowpath Integrity/ RCS Press. Bound. Prot
CKV-63-562	8948C	10	Self Actuated	Check	ECCS Flowpath Integrity/ RCS Press. Bound. Prot
CKV-63-563	8948D	10	Self Actuated	Check	ECCS Flowpath Integrity/ RCS Press. Bound. Prot
CKV-63-581	8805	3	Self Actuated	Check	ECCS Flowpath Integrity/ RCS Press. Bound. Prot
CKV-63-586	8900A	1-1/2	Self Actuated	Check	ECCS Flowpath Integrity/ RCS Press. Bound. Prot
CKV-63-587	8900B	1-1/2	Self Actuated	Check	ECCS Flowpath Integrity/ RCS Press. Bound. Prot
CKV-63-588	8900C	1-1/2	Self Actuated	Check	ECCS Flowpath Integrity/ RCS Press. Bound. Prot
CKV-63-589	8900D	1-1/2	Self Actuated	Check	ECCS Flowpath Integrity/ RCS Press. Bound. Prot
CKV-63-622	8956A	10	Self Actuated	Check	ECCS Flowpath Integrity/ RCS Press. Bound. Prot
CKV-63-623	8956B	10	Self Actuated	Check	ECCS Flowpath Integrity/ RCS Press. Bound. Prot
CKV-63-624	8956C	10	Self Actuated	Check	ECCS Flowpath Integrity/ RCS Press. Bound. Prot
CKV-63-625	8956D	10	Self Actuated	Check	ECCS Flowpath Integrity/ RCS Press. Bound. Prot
CKV-63-632	8818B	6	Self Actuated	Check	ECCS Flowpath Integrity/ RCS Press. Bound. Prot

Table 3.9-17 Active Valves for Primary Fluid Systems (Sheet 6 of 9)

CKV-63-633	8818A	6	Self Actuated	Check	ECCS Flowpath Integrity/ RCS Press. Bound. Prot
CKV-63-634	8818C	6	Self Actuated	Check	ECCS Flowpath Integrity/ RCS Press. Bound. Prot
CKV-63-640	8841A	8	Self Actuated	Check	ECCS Flowpath Integrity/ RCS Press Bound. Prot
CKV-63-635	8818D	6	Self Actuated	Check	ECCS Flowpath Integrity/ RCS Press Bound. Prot
CKV-63-641	8949A	6	Self Actuated	Check	ECCS Flowpath Integrity/ RCS Press Bound. Prot
CKV-63-643	8841B	8	Self Actuated	Check	ECCS Flowpath Integrity/ RCS Press Bound. Prot
CKV-63-644	8949C	6	Self Actuated	Check	ECCS Flowpath Integrity/ RCS Press Bound. Prot
CKV-63-502[3]	8958	12	Self Actuated	Check	ECCS Flowpath Integrity/
CKV-63-510[3]	8926	8	Self Actuated	Check	ECCS Flowpath Integrity/
RFV-63-511[3]	8858	3/4	Self Actuated	Angle	SI Pressure Release
RFV-63-534[3]	8853A	3/4	Self Actuated	Angle	SI Pressure Release
RFV-63-535[3]	8851	3/4	Self Actuated	Angle	SI Pressure Release
RFV-63-536[3]	8853B	3/4	Self Actuated	Angle	SI Pressure Release
RFV-63-577[3,4]	8852	1	Self Actuated	Angle	SI Pressure Release
RFV-63-602[3]	8855A	1	Self Actuated	Angle	SI Pressure Release
RFV-63-603[3]	8855B	1	Self Actuated	Angle	SI Pressure Release
RFV-63-604[3]	8855C	1	Self Actuated	Angle	SI Pressure Release
RFV-63-605[3]	8855D	1	Self Actuated	Angle	SI Pressure Release
RFV-63-626[3]	8856A	2	Self Actuated	Angle	SI Pressure Release
RFV-63-627[3]	8856B	3	Self Actuated	Angle	SI Pressure Release
RFV-63-637[3]	8842	3/4	Self Actuated	Angle	SI Pressure Release
RFV-63-835	----	3/4	Self Actuated	Angle	SI Pressure Release
CKV-63-868	---	1	Self Actuated	Angle	Containment Isolation

Table 3.9-17 Active Valves for Primary Fluid Systems (Sheet 7 of 9)

Reactor Coolant System (68)	FCV-68-305	8033	3/4	Air	Daphragm	Containment Isolation
	FCV-68-307	8025	3/8	Air	Globe	Containment Isolation
	FCV-68-308	8026	3/8	Air	Globe	Containment Isolation
	FCV-68-332	8000A	3	Motor	Gate	PORV Isolation
	FCV-68-333	8000B	3	Motor	Gate	PORV Isolation
	PCV-68-334	PCV-456	3	Solenoid	Globe	PORV
	PCV-68-340A	PCV-455	3	Solenoid	Globe	PORV
	CKV-68-559	8097	4	Self Actuated	Check	Containment Isolation
	RFV-68-563	8010C	6	Self Actuated	Angle	RCS Pressure Release
	RFV-68-564	8010B	6	Self Actuated	Angle	RCS Pressure Release
	RFV-68-565	8010A	6	Self Actuated	Angle	RCS Pressure Release
	FSV-68-394	8012A	1	Solenoid	Globe	Head Vent
	FSV-68-395	8012B	1	Solenoid	Globe	Head Vent
	FSV-68-396	8014B	1	Solenoid	Globe	Head Vent
	FSV-68-397	8014A	1	Solenoid	Globe	Head Vent
	CKV-68-849	---	3/4	Self Actuated	Check	Contaiment Isolation
Containment Spray System (72)	FCV-72-2	9001B	10	Motor	Gate	Containment Isolation
	FCV-72-21	9017B	12	Motor	Gate	Containment Sump Recirculation
	FCV-72-22	9017A	12	Motor	Gate	Containment Sump Recirculation
	FCV-72-39	9001A	10	Motor	Gate	Containment Isolation
	FCV-72-40	9026A	8	Motor	Gate	Containment Isolation
	FCV-72-41	9026B	8	Motor	Gate	Containment Isolation
	FCV-72-44	9020A	12	Motor	Gate	Containment Sump Recirculation
	FCV-72-45	9020B	12	Motor	Gate	Containment Sump Recirculation
	CKV-72-506	9018A	12	Self Actuated	Check	Containment Sump Recirculation
	CKV-72-507	9018B	12	Self Actuated	Check	Containment Sump Recirculation
	RFV-72-508	9019A	0.75	Self Actuated	Relief	Containment Spray PMP A Suction Pressure Relief
	RFV-72-509	9019B	0.75	Self Actuated	Relief	Containment Spray PMP B Suction Pressure Relief
	CKV-72-548	9011A	10	Self Actuated	Check	Containment Isolation
	CKV-72-549	9011B	10	Self Actuated	Check	Containment Isolation
	CKV-72-562	9022A	8	Self Actuated	Check	RHR Isolation

Table 3.9-17 Active Valves for Primary Fluid Systems (Sheet 8 of 9)

	CKV-72-563	9022B	8	Self Actuated	Check	RHR Isolation
Residual Heat Removal System (74)	FCV-74-1	8702	14	Motor	Gate	RCS Pressure Boundary Protection
	FCV-74-2	8701	14	Motor	Gate	RCS Pressure Boundary Protection
	FCV-74-3	8700A	14	Motor	Gate	ECCS Flowpath Integrity
	FCV-74-8	8703	10	Motor	Gate	RCS Pressure Boundary Protection
	FCV-74-9	8704	10	Motor	Gate	RCS Pressure Boundary Protection
	FCV-74-12	FCV-610	3	Motor	Globe	RHR Mini-Flow
	FCV-74-21	8700B	14	Motor	Gate	ECCS Flowpath Integrity
	FCV-74-24	FCV-611	3	Motor	Globe	RHR Mini-Flow
	FCV-74-33	8716A	8	Motor	Gate	ECCS Flowpath Integrity
	FCV-74-35	8716B	8	Motor	Gate	ECCS Flowpath Integrity
	RFV-74-505	8708	3	Self Actuated	Relief	RHR Pump Suction
	CKV-74-514	8730A	8	Self Actuated	Check	Prevent Backflow thru Nonoperating Train
	CKV-74-515	8730B	8	Self Actuated	Check	Prevent Backflow thru Nonoperating Train
	CKV-74-544		8	Self Actuated	Check	Prevents pump-to-pump Interaction
	CKV-74-545		8	Self Actuated	Check	Prevents pump-to-pump Interaction
Waste Disposal System (77)	FCV-77-9	9170	3	Air	Diaphragm	Containment Isolation
	FCV-77-10	FCV-1003	3	Air	Diaphragm	Containment Isolation
	FCV-77-16	9159A	3/4	Air	Globe	Containment Isolation
	FCV-77-17	9159B	3/4	Air	Globe	Containment Isolation
	FCV-77-18	9160A	1	Air	Globe	Containment Isolation
	FCV-77-19	9160B	1	Air	Globe	Containment Isolation
	FCV-77-20	9157	1	Air	Globe	Containment Isolation
	FCV-77-127		2	Air	Plug	Containment Isolation
	FCV-77-128		2	Air	Plug	Containment Isolation
	RFV-77-2875		1/2	Self Actuated	Relief	Thermal Relief Valve Penetration X41

Table 3.9-17 Active Valves for Primary Fluid Systems (Sheet 9 of 9)

Spent Fuel Pool Cooling (78)	CKV-78-509	8	Self Actuated	Check	Pump A-A Discharge Check Valve
	CKV-78-510	8	Self Actuated	Check	Pump B-B Discharge Check Valve
	ISV-78-581	10	Manual	Gate	Standby Pump Train A Suction Isolation Valve
	ISV-78-582	10	Manual	Gate	Standby Pump Train B Suction Isolation Valve
	CKV-78-586	8	Self Actuated	Check	Pump C-S Discharge Check Valve
	ISV-78-587	8	Manual	Gate	Standby Pump Train B Discharge Isolation Valve
	ISV-78-588	8	Manual	Gate	Standby Pump Train A Discharge Isolation Valve

[1] Testing not required to meet 10CFR50 Appendix J.

[2] Testing not required as part of Inservice Testing Program. Testing not required to meet 10 CFR 50 Appendix J. See Table 6.2.4-1.

[3] These components were not committed to meet the requirements of RG 1.48 since these were procured under contracts issued prior to September 1, 1974.

[4] Valve 1-RFV-63-577 is not required to open to mitigate the consequences of an accident. However, the valve must be in the closed position to mitigate the consequences of an accident.

Table 3.9-18 Stress Limits for Active Category I ASME Class 2 and 3 Pumps

Condition	Stress Limits[(1) (2)]
Design	
Normal and Upset	$P_m \leq 1.0\ S_h$ $(P_m \text{ or } P_L) + P_b \leq 1.5\ S_h$
Emergency	$P_m \leq 1.1\ S_h$ $(P_m \text{ or } P_L) + P_b \leq 1.65\ S_h$
Faulted	$P_m \leq 1.2\ S_h$ $(P_m \text{ or } P_L) + P_b \leq 1.8\ S_h$

S_h =Material allowable stress at maximum operating temperature from ASME Section III, 1971 Edition through Summer 1973 Addenda or the applicable code edition specified at the time of procurement.

P_m =Primary general membrane stress, the average primary stress across the solid section under consideration. Excludes effects of discontinuities and concentrations. Produced by pressure, mechanical loads.

P_b =Primary bending stress. This stress is produced by pressure and mechanical loads including inertia earthquake effects but excluding effects of discontinuities and concentrations.

P_L =Primary local membrane stress, the average stress across any solid section under consideration. Considers effects of discontinuities but not concentrations. Produced by pressure and mechanical loads including inertia earthquake effects.

Notes:

1. The stress allowables given above were permitted for design, evaluation, and modification activities. As an alternative, a simplified approach was permitted for pumps procured prior to September 1, 1974. By this alternative approach, in addition to meeting applicable ASME Code design condition requirements, the pump was analyzed for the faulted condition and pump stresses were limited to 1.2 times the applicable ASME Code design/normal condition primary stress allowables.

2. Active pumps procured after September 1, 1974 also complied with operability tests and analysis requirements described in Section 3.9.3.2.2.2.

Table 3.9-19 Stress Limits for Active Category I ASME Class 2 and 3 Valves

Condition	Stress Limits (Notes 1-6)
Design & Normal	$P_m \leq 1.0\ S_h$ $(P_m \text{ or } P_L) + P_b \leq 1.5\ S_h$
Upset	$P_m \leq 1.1\ S_h$ $(P_m \text{ or } P_L) + P_b \leq 1.65\ S_h$
Emergency	$P_m \leq 1.5\ S_h$ $(P_m \text{ or } P_L) + P_b \leq 1.8\ S_h$
Faulted	$P_m \leq 2.0\ S_h$ $(P_m \text{ or } P_L) + P_b \leq 2.4\ S_h$

Notes:

1. S_h, P_m, P_b, and P_L are defined in Table 3.9-18.

2. Valve nozzle (piping load) stress analysis is not required when section modulus and area of a plane, normal to the flow, through the region of valve body crotch is at least 10% greater than the piping connected (or joined) to the valve body inlet and outlet nozzles.

3. Stress in the valve nozzles resulting from connecting pipe does not exceed the limits listed in this table where S is based on the valve material. To ensure this, the attached pipe stress is limited in accordance with Table 3.9-10 unless justified on a case-by-case basis, or otherwise not part of the pressure boundary.

4. Design requirements listed in this table are not applicable to valve discs, stems, cast rings, or other parts of valves which are contained within the confines of the body and bonnet.

5. The stress allowables given above were permitted for design, evaluation, and modification activities. As an alternative, a simplified approach was permitted for valves procured prior to September 1, 1974. By this alternative approach, in addition to meeting the applicable ASME code design condition requirements, the valve was analyzed or tested on IEEE 344-1971 requirements for the faulted condition. When qualified by analysis using this alternative, the valve stresses were limited to 1.2 times the applicable ASME code design/normal condition primary stress allowables and the valve extended structure stresses were limited to 1.33 times the AISC Code normal stress allowable.

6. Active valves procured after September 1, 1974 also complied with operability test and analysis requirements of R.G. 1.48.

Table 3.9-20 Relief Valves in Class 2 Auxiliary Systems

System	No.	Location	Fluid	Relieving Temperature	Valve Set Pressure	Maximum Required Flow Rate	Discharge	Associated Relief Valve
SIS	1	Accumulator Tanks/ N_2 Supply	Nitrogen or Borated Water	120⌒F	700/750 psig	1500 cfm	Atmosphere	RFV-63-602, -603, -604, -605
SIS	2	S. I. Pump Suction	Borated Water	100⌒F	220 psig	25 gpm	to PRT	RFV-63-511, -835
SIS	3	S. I. Pump Discharge	Borated Water	100⌒F	1750 psig	20 gpm	to PRT	RFV-63-534, -535, -536
SIS	4	Boron Injection Tank	Borated Water	180⌒F	2735 psig	20 gpm	to HT	RFV-63-577
RHR	5	Residual Pump Suction	Borated Water	350⌒F** 200⌒F	450 psig 450 psig	480 gpm 690 gpm	to PRT to PRT	RFV-74-505
RHR	6	Residual Pump Discharge	Borated Water	120⌒F	600 psig	20 gpm	to PRT	RFV-63-626, -627, -637
CVCS	7	Letdown Line Orifice	Borated Water	347⌒F**	600 psig	227 gpm	to PRT	RFV-62-662
CVCS	8	Seal Water Return Line	Borated Water	250⌒F**	150 psig	225 gpm	to PRT	RFV-62-636
CVCS	9	Letdown Line	Borated Water	200⌒F	200 psig	200 gpm	to VCT***	RFV-62-675
CVCS	10	Seal Water Return Line	Borated Water	150⌒F	200 psig	180 gpm	to VCT***	RFV-62-649
CVCS	11	Volume Control Tank	Hydrogen Nitrogen or Borated Water	130⌒F	70 psig	350 gpm	to HT***	RFV-62-688
CVCS	12	Charging Pump Suction	Borated Water	100⌒F	220 psig	25 gpm	to PRT	RFV-62-1221, -1222
WDS	14	Downstream of FCV-77-127	Liquid Radwaste	140⌒F	50 psig	1 gpm	upstream of FCV-77-127	RFV-77-2875
SIS	15	Penetration X-30	Borated Water	235°F	2480 psig	20 gpm	to PRT	RFV-63-28

**Water-steam Mixture Downstream of Valve
***Safety Class B Discharge Piping

PRT - Pressurizer Relief Tank
VCT - Volume Control Tank
HT - Holdup Tanks

Reference:

SIS = Figure 6.3-1, Sh1 (TVA Dwg. 1-47W811-1, 2-47W811-1)
RHR = Figure 2.4-107 and 5.5-4-1 (TVA Dwg. 1-47W810-1, 2-47W810-1)
CVCS = Figures 9.3-15, Sh1 (TVA Dwg. 1-47W809-1, 2-47W809-1)
WDS = Figure 9.3-7 (TVA Dwg. 1-47W851-1, 2-47W851-1)

Table 3.9-21 Support Design Allowable Stresses For Category I Piping Supports

Load Condition	Supplemental Structural Steel, Welds & Structural Bolts(2)	Component Standard Supports W/ LCDS' Except Unistrut Clamps	Component Standard Supports W/O LCDS' Except Unistrut Clamps(1)
Normal & Friction	Normal AISC Allowable	Manufacturer's LCDS for Level A	Manufacturer's Allowable Catalog Value
Upset	Normal AISC Allowable X 1.33	Manufacturer's LCDS for Level B	Manufacturer's Allowable Catalog Value X 1.2
Emergency	Normal AISC Allowable X 1.5	Manufacturer's LCDS for Level C	Manufacturer's Allowable Catalog Value X 1.5
Faulted	Normal AISC Allowable X 1.5	Manufacturer's LCDS for Level D	Manufacturer's Allowable Catalog Value X 1.5
Test	Normal AISC Allowable	Manufacturer's LCDS for Level A X 1.33	Manufacturer's Allowable Catalog Value X 1.33

Notes:

(1) The allowable loads for both U-bolts and unistrut clamps were developed based on the load testing per the requirements of ASME Section III 1974, Subsection NF including Winter 1974, Addenda.

(2) Tensile stresses do not exceed $0.9F_y$ and shear stresses do not exceed $0.9F_y/\sqrt{3}$ For compressive loads, the stress does not exceed 2/3 critical buckling

Table 3.9-22 Deleted by Amendment 51

Table 3.9-23 Deleted by Amendment 51

Table 3.9-24 Deleted by Amendment 51

Table 3.9-25 Valves Required To Be Active For Design Basis Events
(Sheet 1 of 23)

System Name	Valve No.	Size Inches	Actuation	Type	Function/Description
Main Steam (1)	FCV-1-4	32	Air	Globe	Main steam and containment isolation
	PCV-1-5	6	Air	Globe	SG pressure control and relief
	FCV-1-7	4	Solenoid	Globe	Blowdown and containment isolation
	FCV-1-11	32	Air	Globe	Main steam and containment isolation
	PCV-1-12	6	Air	Globe	SG pressure control and relief
	FCV-1-14	4	Solenoid	Globe	Blowdown and containment isolation
	FCV-1-22	32	Air	Globe	Main steam and containment isolation
	PCV-1-23	6	Air	Globe	SG pressure control and relief
	FCV-1-25	4	Solenoid	Globe	Blowdown and containment isolation
	FCV-1-29	32	Air	Globe	Main steam and containment isolation
	PCV-1-30	6	Air	Globe	SG pressure control and relief
	FCV-1-32	4	Solenoid	Globe	Blowdown and containment isolation
	FCV-1-51	4	Motor	Globe	AFW pump turbine operation
	FCV-1-52	4	Hydraulic	Globe	AFW pump turbine operation
	FCV-1-147	2	Air	Globe	Containment isolation
	FCV-1-148	2	Air	Globe	Containment isolation
	FCV-1-149	2	Air	Globe	Containment isolation
	FCV-1-150	2	Air	Globe	Containment isolation
	FCV-1-181	4	Solenoid	Globe	Containment isolation
	FCV-1-182	4	Solenoid	Globe	Containment isolation
	FCV-1-183	4	Solenoid	Globe	Containment isolation
	FCV-1-184	4	Solenoid	Globe	Containment isolation

Table 3.9-25 Valves Required To Be Active For Design Basis Events
(Sheet 2 of 23)

System Name	Valve No.	Size Inches	Actuation	Type	Function/Description
	SFV-1-512	6x10	Self-actuated	Angle relief	Steam generator safety relief
	SFV-1-513	6x10	Self-actuated	Angle relief	Steam generator safety relief
	SFV-1-514	6x10	Self-actuated	Angle relief	Steam generator safety relief
	SFV-1-515	6x10	Self-actuated	Angle relief	Steam generator safety relief
	SFV-1-516	6x10	Self-actuated	Angle relief	Steam generator safety relief
	SFV-1-517	6x10	Self-actuated	Angle relief	Steam generator safety relief
	SFV-1-518	6x10	Self-actuated	Angle relief	Steam generator safety relief
	SFV-1-519	6x10	Self-actuated	Angle relief	Steam generator safety relief
	SFV-1-520	6x10	Self-actuated	Angle relief	Steam generator safety relief
	SFV-1-521	6x10	Self-actuated	Angle relief	Steam generator safety relief
	SFV-1-522	6x10	Self-actuated	Angle relief	Steam generator safety relief
	SFV-1-523	6x10	Self-actuated	Angle relief	Steam generator safety relief
	SFV-1-524	6x10	Self-actuated	Angle relief	Steam generator safety relief

Table 3.9-25 Valves Required To Be Active For Design Basis Events
(Sheet 3 of 23)

System Name	Valve No.	Size Inches	Actuation	Type	Function/Description
Main Steam (1) (Continued)	SFV-1-525	6x10	Self-actuated	Angle relief	Steam generator safety relief
	SFV-1-526	6x10	Self-actuated	Angle-relief	Steam generator safety relief
	SFV-1-527	6x10	Self-actuated	Angle-relief	Steam generator safety relief
	SFV-1-528	6x10	Self-actuated	Angle-relief	Steam generator safety relief
	SFV-1-529	6x10	Self-actuated	Angle-relief	Steam generator safety relief
	SFV-1-530	6x10	Self-actuated	Angle relief	Steam generator safety relief
	SFV-1-531	6x10	Self-actuated	Angle relief	Steam generator safety relief
	FCV-1-15	4	Motor	Gate	AFW pump turbine operation
	FCV-1-16	4	Motor	Gate	AFW pump turbine operation
	FCV-1-17	4	Motor	Gate	AFW pump turbine operation
	FCV-1-18	4	Motor	Gate	AFW pump turbine operation
	CKV-1-891	4	Self-actuated	Check	Prvnt bkflw btwn stm gen
	CKV-1-892	4	Self-actuated	Check	Prvnt bkflw btwn stm gen

Table 3.9-25 Valves Required To Be Active For Design Basis Events
(Sheet 4 of 23)

System Name	Valve No.	Size Inches	Actuation	Type	Function/Description
Feedwater (3)	FCV-3-33	16	Motor	Gate	Main feedwater isolation
	FCV-3-47	16	Motor	Gate	Main feedwater isolation
	FCV-3-87	16	Motor	Gate	Main feedwater isolation
	FCV-3-100	16	Motor	Gate	Main feedwater isolation
	FCV-3-116A	4	Motor	Gate	AFW flow path integrity
	FCV-3-116B	4	Motor	Gate	AFW flow path integrity
	PCV-3-122	4	Air	Globe	Maintain head on pump
	FCV-3-126A	4	Motor	Gate	AFW flow path integrity
	FCV-3-126B	4	Motor	Gate	AFW flow path integrity
	PCV-3-132	4	Air	Globe	Maintain head on pump
	FCV-3-136A	6	Motor	Gate	AFW flow path integrity
	FCV-3-136B	6	Motor	Gate	AFW flow path integrity
	LCV-3-148	4	Air	Globe	Steam generator level control
	LCV-3-148A	2	Air	Globe	Steam generator level control
	LCV-3-156	4	Air	Globe	Steam generator level control
	LCV-3-156A	2	Air	Globe	Steam generator level control
	LCV-3-164	4	Air	Globe	Steam generator level control
	LCV-3-164A	2	Air	Globe	Steam generator level control
	LCV-3-171	4	Air	Globe	Steam generator level control
	LCV-3-171A	2	Air	Globe	Steam generator level control
	LCV-3-172	3	Air/Nitrogen	Globe	Steam generator level control
	LCV-3-173	3	Air/Nitrogen	Globe	Steam generator level control
	LCV-3-174	3	Air/Nitrogen	Globe	Steam generator level control
	LCV-3-175	3	Air/Nitrogen	Globe	Steam generator level control
	FCV-3-179A	6	Motor	Gate	AFW flow path integrity
	FCV-3-179B	6	Motor	Gate	AFW flow path integrity
	2-FCV-3-185	2	Air	Globe	FW pressure integrity
	2-FCV-3-186	2	Air	Globe	FW pressure integrity
	2-FCV-3-187	2	Air	Globe	FW pressure integrity
	2-FCV-3-188	2	Air	Globe	FW pressure integrity

Table 3.9-25 Valves Required To Be Active For Design Basis Events
(Sheet 5 of 23)

System Name	Valve No.	Size Inches	Actuation	Type	Function/Description
Feedwater (3) (Continued)	FCV-3-236	6	Air	Globe	Main feedwater isolation
	FCV-3-239	6	Air	Globe	Main feedwater isolation
	FCV-3-242	6	Air	Globe	Main feedwater isolation
	FCV-3-245	6	Air	Globe	Main feedwater isolation
	FCV-3-355	2	Air	Globe	Recirc. Isolation
	FCV-3-359	2	Air	Globe	Recirc. Isolation
	CKV-3-508	16	Self-actuated	Check	Pipe break protection
	CKV-3-509	16	Self-actuated	Check	Pipe break protection
	CKV-3-510	16	Self-actuated	Check	Pipe break protection
	CKV-3-511	16	Self-actuated	Check	Pipe break protection
	CKV-3-638	6	Self-actuated	Check	Pipe break protection
	CKV-3-644	6	Self-actuated	Check	Pipe break protection
	CKV-3-645	6	Self-actuated	Check	Pipe break protection
	CKV-3-652	6	Self-actuated	Check	Pipe break protection
	CKV-3-655	6	Self-actuated	Check	Pipe break protection
	CKV-3-656	6	Self-actuated	Check	Pipe break protection
	CKV-3-669	6	Self-actuated	Check	Pipe break protection
	CKV-3-670	6	Self-actuated	Check	Pipe break protection
	CKV-3-678	6	Self-actuated	Check	Pipe break protection
	CKV-3-679	6	Self-actuated	Check	Pipe break protection
	CKV-3-805	6	Self-actuated	Check	ERCW flowpath integrity
	CKV-3-806	6	Self-actuated	Check	ERCW flowpath integrity
	CKV-3-810	10	Self-actuated	Check	ERCW flowpath integrity
	CKV-3-830	4	Self-actuated	Check	Maintain TDAFW pump flow path integrity
	CKV-3-831	4	Self-actuated	Check	Maintain TDAFW pump flow path integrity
	CKV-3-832	4	Self-actuated	Check	Maintain TDAFW pump flow path integrity
	CKV-3-833	4	Self-actuated	Check	Maintain TDAFW pump flow path integrity
	CKV-3-861	4	Self-actuated	Check	Containment Isolation
	CKV-3-862	4	Self-actuated	Check	Containment Isolation
	CKV-3-871	4	Self-actuated	Check	Maintain TDAFW pump flow path integrity
	CKV-3-872	4	Self-actuated	Check	Maintain TDAFW pump flow path integrity
	CKV-3-873	4	Self-actuated	Check	Maintain TDAFW pump flow path integrity
	CKV-3-874	4	Self-actuated	Check	Maintain TDAFW pump flow path integrity
	CKV-3-921	4	Self-actuated	Check	Containment Isolation
	CKV-3-922	4	Self-actuated	Check	Containment Isolation

Table 3.9-25 Valves Required To Be Active For Design Basis Events
(Sheet 6 of 23)

System Name	Valve No.	Size Inches	Actuation	Type	Function/Description
Fuel Oil (18)	CKV-18-556A	1.500	Self-actuated	Check	7-DAY MDP #1 ISOL
	CKV-18-556B	1.500	Self-actuated	Check	7-DAY MDP #1 ISOL
	CKV-18-557A	1.500	Self-actuated	Check	7-DAY MDP #2 ISOL
	CKV-18-557B	1.500	Self-actuated	Check	7-DAY MDP #2 ISOL
	CKV-18-558A	1.000	Self-actuated	Check	DAY TK #1 MDP ISOL
	CKV-18-558B	1.000	Self-actuated	Check	DAY TK #1 MDP ISOL
	CKV-18-559A	1.000	Self-actuated	Check	DAY TK #1 EDP ISOL
	CKV-18-559B	1.000	Self-actuated	Check	DAY TK #1 EDP ISOL
	RFV-18-560A	0.375	Self-actuated	Relief	DAY TK #1 MDP DISC
	RFV-18-560B	0.375	Self-actuated	Relief	DAY TK #1 MDP DISC
	CKV-18-563A	1.000	Self-actuated	Check	DAY TK #1 MDP DISC
	CKV-18-563B	1.000	Self-actuated	Check	DAY TK #1 MDP DISC
	CKV-18-565A	1.000	Self-actuated	Check	DAY TK #2 MDP ISOL
	CKV-18-565B	1.000	Self-actuated	Check	DAY TK #2 MDP ISOL
	CKV-18-566A	1.000	Self-actuated	Check	DAY TK #2 EDP ISOL
	CKV-18-566B	1.000	Self-actuated	Check	DAY TK #2 EDP ISOL
	RFV-18-567A	0.375	Self-actuated	Relief	DAY TK #2 MDP DISC
	RFV-18-567B	0.375	Self-actuated	Relief	DAY TK #2 MDP DISC
	CKV-18-570A	1.000	Self-actuated	Check	DAY TK #2 MDP DISC
	CKV-18-570B	1.000	Self-actuated	Check	DAY TK #2 MDP DISC
High-Pressure Fire Protection System (26)	FCV-26-240	4	Motor	Gate	Containment isolation
	FCV-26-243	4	Motor	Gate	Containment isolation
	CKV-26-1260	4	Self-actuated	Check	Containment isolation
	CKV-26-1296	4	Self-actuated	Check	Containment isolation

Table 3.9-25 Valves Required To Be Active For Design Basis Events
(Sheet 7 of 23)

System Name	Valve No.	Size Inches	Actuation	Type	Function/Description
Ventilation (30)	FCV-30-2	24	Air	Butterfly	Isolation Valve
	FCV-30-5	24	Air	Butterfly	Isolation Valve
	FCV-30-7	24	Air	Butterfly	Containment Isolation
	FCV-30-8	24	Air	Butterfly	Containment isolation
	FCV-30-9	24	Air	Butterfly	Containment isolation
	FCV-30-10	24	Air	Butterfly	Containment isolation
	FCV-30-12	24	Air	Butterfly	Isolation Valve
	FCV-30-14	24	Air	Butterfly	Containment isolation
	FCV-30-15	24	Air	Butterfly	Containment isolation
	FCV-30-16	24	Air	Butterfly	Containment isolation
	FCV-30-17	24	Air	Butterfly	Containment isolation
	FCV-30-19	10	Air	Butterfly	Containment isolation
	FCV-30-20	10	Air	Butterfly	Containment isolation
	FCV-30-37	8	Air	Butterfly	Containment isolation
	FCV-30-40	8	Air	Butterfly	Containment isolation
	FCV-30-50	24	Air	Butterfly	Containment isolation
	FCV-30-51	24	Air	Butterfly	Containment isolation
	FCV-30-52	24	Air	Butterfly	Containment isolation
	FCV-30-53	24	Air	Butterfly	Containment isolation
	FCV-30-54	24	Air	Butterfly	Isolation Valve
	FCV-30-56	24	Air	Butterfly	Containment isolation
	FCV-30-57	24	Air	Butterfly	Containment isolation
	FCV-30-58	10	Air	Butterfly	Containment isolation
	FCV-30-59	10	Air	Butterfly	Containment isolation
	FCV-30-61	24	Air	Butterfly	Isolation Valve
	FCV-30-62	24	Air	Butterfly	Isolation Valve

Table 3.9-25 Valves Required To Be Active For Design Basis Events
(Sheet 8 of 23)

System Name	Valve No.	Size Inches	Actuation	Type	Function/Description
Air-Conditioning System (31)	FCV-31-305	2	Air	Gate	Containment Isolation
	FCV-31-306	2	Air	Gate	Containment Isolation
	FCV-31-308	2	Air	Gate	Containment Isolation
	FCV-31-309	2	Air	Gate	Containment Isolation
	FCV-31-326	2	Air	Gate	Containment Isolation
	FCV-31-327	2	Air	Gate	Containment Isolation
	FCV-31-329	2	Air	Gate	Containment Isolation
	FCV-31-330	2	Air	Gate	Containment Isolation
	CKV-31-2193	6	Self Actuated	Check	Pump Flow
	CKV-31-3378	½	Self Actuated	Check	Containment Isolation
	CKV-31-3392	½	Self Actuated	Check	Containment Isolation
	CKV-31-3407	½	Self Actuated	Check	Containment Isolation
	CKV-31-3421	½	Self Actuated	Check	Containment Isolation

Table 3.9-25 Valves Required To Be Active For Design Basis Events
(Sheet 9 of 23)

System Name	Valve No.	Size Inches	Actuation	Type	Function/Description
Control Air System (32)	FCV-32-70	1	Motor	Ball	Aux. Dryer Purge Control
	CKV-32-70A	1	Self Actuated	Check	Air Dryer Purge Check Valve
	CKV-32-70B	1	Self Actuated	Check	Air Dryer Purge Check Valve
	CKV-32-70C	1	Self Actuated	Check	Air Dryer Purge Check Valve
	CKV-32-70D	1	Self Actuated	Check	Air Dryer Purge Check Valve
	FCV-32-71	1	Motor	Ball	Aux. Dryer Purge Control
	FCV-32-72	1	Motor	Ball	Aux. Dryer Purge Control
	FCV-32-73	1	Motor	Ball	Aux. Dryer Purge Control
	FCV-32-80	2	Air	Globe	Containment Isolation
	FCV-32-81	2	Air	Globe	Containment Isolation
	FCV-32-81	2	Air	Globe	Containment Isolation
	FCV-32-82	2	Air	Globe	Control Air Normal Flow Isol
	FCV-32-85	2	Air	Globe	Control Air Normal Flow Isol
	FCV-32-94	1	Motor	Ball	Aux. Dryer Purge Control
	CKV-32-94A	1	Self Actuated	Check	Air Dryer Purge Check Valve
	CKV-32-94B	1	Self Actuated	Check	Air Dryer Purge Check Valve
	CKV-32-94C	1	Self Actuated	Check	Air Dryer Purge Check Valve
	CKV-32-94D	1	Self Actuated	Check	Air Dryer Purge Check Valve
	FCV-32-95	1	Motor	Ball	Aux. Dryer Purge Control
	FCV-32-96	1	Motor	Ball	Aux. Dryer Purge Control
	FCV-32-97	1	Motor	Ball	Aux. Dryer Purge Control

Table 3.9-25 Valves Required To Be Active For Design Basis Events
(Sheet 10 of 23)

System Name	Valve No.	Size Inches	Actuation	Type	Function/Description
Control Air System (32) (cont)	1-FCV-32-102	2	Air	Globe	Containment isolation
	2-FCV-32-103	2	Air	Globe	Containment isolation
	1-FCV-32-110	2	Air	Globe	Containment isolation
	2-FCV-32-111	2	Air	Globe	Containment isolation
	0-CKV-32-240	2	Self Actuated	Check	Air Dryer Purge Check Valve
	0-CKV-32-256	2	Self Actuated	Check	Air Dryer Purge Check Valve
	0-CKV-32-264	2	Self Actuated	Check	Air Dryer Purge Check Valve
	0-CKV-32-279	2	Self Actuated	Check	Air Dryer Purge Check Valve
	1-CKV-32-293	2	Self Actuated	Check	Containment isolation
	1-CKV-32-303	2	Self Actuated	Check	Containment isolation
	1-CKV-32-313	2	Self Actuated	Check	Containment isolation
	2-CKV32-323	2	Self Actuated	Check	Containment isolation
	2-CKV-32-333	2	Self Actuated	Check	Containment isolation
	2-CKV-32-343	2	Self Actuated	Check	Containment isolation

Table 3.9-25 Valves Required To Be Active For Design Basis Events
(Sheet 11 of 23)

System Name	Valve No.	Size Inches	Actuation	Type	Function/Description
Sampling and Water Quality (43)	FCV-43-2	3/8	Solenoid	Globe	Containment isolation
	FCV-43-3	3/8	Air	Globe	Containment isolation
	FCV-43-11	3/8	Solenoid	Globe	Containment isolation
	FCV-43-12	3/8	Air	Globe	Containment isolation
	FCV-43-22	3/8	Solenoid	Globe	Containment isolation
	FCV-43-23	3/8	Air	Gate	Containment isolation
	FCV-43-34	3/8	Solenoid	Globe	Containment isolation
	FCV-43-35	3/8	Air	Globe	Containment isolation
	FCV-43-55	3/8	Air	Gate	containment isolation
	FCV-43-58	3/8	Air	Gate	Containment isolation
	FCV-43-61	3/8	Air	Gate	Containment isolation
	FCV-43-64	3/8	Air	Gate	Containment isolation
	FCV-43-75	3/8	Solenoid	Globe	Containment isolation
	FCV-43-77	3/8	Air	Globe	Containment isolation
	PCV-43-200A	1/4	Self Actuated	Regulating	LOCA H2 Cntmt Monitor Press Reg
	PCV-43-200B	1/4	Self Actuated	Regulating	LOCA H2 Cntmt Monitor Press Reg
	FCV-43-201	3/8	Solenoid	Globe	Containment isolation
	FCV-43-202	3/8	Solenoid	Globe	Containment isolation
	FCV-43-207	3/8	Solenoid	Globe	Containment isolation
	FCV-43-208	3/8	Solenoid	Globe	Containment isolation
	1-PCV-43-210A	1/4	Self Actuated	Regulating	LOCA H2 Cntmt Monitor Press Reg
	1-PCV-43-210B	1/4	Self Actuated	Regulating	LOCA H2 Cntmt Monitor Press Reg

Table 3.9-25 Valves Required To Be Active For Design Basis Events
(Sheet 12 of 23)

System Name	Valve No.	Size Inches	Actuation	Type	Function/Description
Sampling and Water Quality (43) (Continued)	FCV-43-433	3/8	Solenoid	Globe	Containment isolation
	FCV-43-434	3/8	Solenoid	Globe	Containment isolation
	FCV-43-435	3/8	Solenoid	Globe	Containment isolation
	FCV-43-436	3/8	Solenoid	Globe	Containment isolation
	1-CKV-43-834	1/2	Self Actuated	Check	Cntmt Isolation PASS Waste Holdup Tank
	1-CKV-43-841	1/2	Self Actuated	Check	Cntmt Isolation PASS Waste Holdup Tank
	1-CKV-43-883	1/2	Self Actuated	Check	Cntmt Isolation PASS Cntmt Air Return
	1-CKV-43-884	1/2	Self Actuated	Check	Cntmt Isolation PASS Cntmt Air Return
	1-PREG-43-1470A-A	1/4	Self Actuated	Regulating	O2 Reagent Gas for H2 Monitor Press Reg
	1-PREG-43-1470B-A	1/4	Self Actuated	Regulating	O2 Reagent Gas for H2 Monitor Press Reg
	1-PREG-43-1471A-B	1/4	Self Actuated	Regulating	O2 Reagent Gas for H2 Monitor Press Reg
	1-PREG-43-1471B-B	1/4	Self Actuated	Regulating	O2 Reagent Gas for H2 Monitor Press Reg
Ice Condenser (61)	CKV-61-533	3/8	Self Actuated	Check	Containment isolation
	CKV-61-680	3/8	Self Actuated	Check	Containment isolation
	CKV-61-692	3/8	Self Actuated	Check	Containment isolation
	CKV-61-745	3/8	Self Actuated	Check	Containment isolation
	FCV-61-96	2	Air	Diaphragm	Containment isolation
	FCV-61-97	2	Air	Diaphragm	Containment isolation
	FCV-61-110	2	Air	Diaphragm	Containment isolation
	FCV-61-122	2	Air	Diaphragm	Containment isolation
	FCV-61-191	4	Air	Diaphragm	Containment isolation
	FCV-61-192	4	Air	Diaphragm	Containment isolation
	FCV-61-193	4	Air	Diaphragm	Containment isolation
	FCV-61-194	4	Air	Diaphragm	Containment isolation
Safety Injection System (63)	1-RFV-63-28	3/4	Self-Actuated	Relief	Penetration X-30 pressure relief containment isolation

Table 3.9-25 Valves Required To Be Active For Design Basis Events
(Sheet 13 of 23)

System Name	Valve No.	Size Inches	Actuation	Type	Function/Description
Emergency Gas Treatment System (65)	1-FCV-65-8	8	Air	Butterfly	EGTS Tr A Unit 1 Suction Damper
	1-FCV-65-10	24	Air	Butterfly	EGTS Tr A Unit 1 Suction Damper
	0-FCV-65-24	8	Air	Butterfly	EGTS Tr A Fan Isolation Damper
	0-FCV-65-28A	8	Air	Butterfly	EGTS Tr A Decay Cooling Damper
	0-FCV-65-28B	8	Air	Gate	EGTS Tr A Decay Cooling Damper
	1-FCV-65-30	24	Air	Butterfly	EGTS Tr B Unit 1 Suction Damper
	0-FCV-65-43	8	Air	Butterfly	EGTS Tr B Fan Isolation Damper
	0-FCV-65-47A	8	Air	Gate	EGTS Tr B Decay Cooling Damper
	0-FCV-65-47B	8	Air	Gate	EGTS Tr B Decay Cooling Damper
	1-FCV-65-51	8	Air	Butterfly	EGTS Tr B Unit 1 Suction Damper
	1-FCV-65-52	14	Air	Butterfly	Cntmt Annulus Vacuum Fan Isolation Damper
	1-FCV-65-53	14	Air	Butterfly	Cntmt Annulus Vacuum Fan Isolation Damper
	PCV-65-81	16	Air	Butterfly	Shield Bldg & Cntmt Annulus Isol Damper
	PCV-65-83	16	Air	Butterfly	Shield Bldg & Cntmt Annulus Isol Damper
	PCV-65-86	16	Air	Butterfly	EGTS Cntmt Annulus Isolation Damper
	PCV-65-87	16	Air	Butterfly	EGTS Cntmt Annulus Isolation Damper
	2-FCV-65-4	14	Air	Butterfly	Cntmt Annulus Vacuum Fan Isolation Damper
	2-FCV-65-5	14	Air	Butterfly	Cntmt Annulus Vacuum Fan Isolation Damper
	2-FCV-65-7	8	Air	Butterfly	EGTS Tr A Unit 2 Suction Damper
	2-FCV-65-9	24	Air	Butterfly	EGTS Tr A Unit 2 Suction Damper
	2-FCV-65-29	24	Air	Butterfly	EGTS Tr B Unit 2 Suction Damper
	2-FCV-65-50	8	Air	Butterfly	EGTS Tr B Unit 2 Suction Damper

Table 3.9-25 Valves Required To Be Active For Design Basis Events
(Sheet 14 of 23)

System Name	Valve No.	Size Inches	Actuation	Type	Function/Description
Essential Raw Cooling Water (67) (See Note**)	FCV-67-9A	4	Motor	Ball	ERCW strainer
	FCV-67-9B	4	Motor	Ball	ERCW strainer
	FCV-67-10A	4	Motor	Ball	ERCW strainer
	FCV-67-10B	4	Motor	Ball	ERCW strainer
	FCV-67-83	6	Motor	Butterfly	Containment isolation
	FCV-67-87	6	Motor	Butterfly	Containment isolation
	FCV-67-88	6	Motor	Butterfly	Containment isolation
	FCV-67-89	6	Motor	Butterfly	Containment isolation
	FCV-67-91	6	Motor	Butterfly	Containment isolation
	FCV-67-95	6	Motor	Butterfly	Containment isolation
	FCV-67-96	6	Motor	Butterfly	Containment isolation
	FCV-67-97	6	Motor	Butterfly	Containment isolation
	FCV-67-99	6	Motor	Butterfly	Containment isolation

Table 3.9-25 Valves Required To Be Active For Design Basis Events
(Sheet 15 of 23)

System Name	Valve No.	Size Inches	Actuation	Type	Function/Description
Essential Raw Cooling Water (67) (Continued)	FCV-67-103	6	Motor	Butterfly	Containment isolation
	FCV-67-104	6	Motor	Butterfly	Containment isolation
	FCV-67-105	6	Motor	Butterfly	Containment isolation
	FCV-67-107	6	Motor	Butterfly	Containment isolation
	FCV-67-111	6	Motor	Butterfly	Containment isolation
	FCV-67-112	6	Motor	Butterfly	Containment isolation
	FCV-67-113	6	Motor	Butterfly	Containment isolation
	FCV-67-123	18	Motor	Butterfly	Containment spray cooling
	FCV-67-124	18	Motor	Butterfly	Containment spray cooling
	FCV-67-125	18	Motor	Butterfly	Containment spray cooling
	FCV-67-126	18	Motor	Butterfly	Containment spray cooling
	FCV-67-130	2	Motor	Plug	Containment isolation
	FCV-67-131	2	Motor	Plug	Containment isolation
	FCV-67-133	2	Motor	Plug	Containment isolation
	FCV-67-134	2	Motor	Plug	Containment isolation
	FCV-67-138	2	Motor	Plug	Containment isolation
	FCV-67-139	2	Motor	Plug	Containment isolation
	FCV-67-141	2	Motor	Plug	Containment isolation
	FCV-67-142	2	Motor	Plug	Containment isolation
	FCV-67-143	12	Motor	Globe	ERCW flow path integrity
	O-FCV-67-144	16	Motor	Globe	ERCW flow path integrity
	O-FCV-67-152	24	Motor	Butterfly	CCS flow path integrity
	1-TCV-67-158	4	Self -Actuated	Globe	SBR temperature control
	2-TCV-67-158	4	Self-Actuated	Globe	SBR temperature control
	1-FCV-67-162	2	Air	Globe	ERCW to pump room coolers
	1-FCV-67-164	2	Air	Globe	ERCW to pump room coolers

Table 3.9-25 Valves Required To Be Active For Design Basis Events
(Sheet 16 of 23)

System Name	Valve No.	Size Inches	Actuation	Type	Function/Description
Essential Raw Cooling Water (67) (Continued)	FCV-67-176	1-1/2	Air	Globe	ERCW to pump room coolers
	FCV-67-182	1-1/2	Air	Globe	ERCW to pump room coolers
	FCV-67-184	1-1/2	Air	Globe	ERCW to pump room coolers
	FCV-67-186	1-1/2	Air	Globe	ERCW to pump room coolers
	0-FCV-67-205	4	Motor	Butterfly	Nonessential equipment isolation
	0-FCV-67-208	4	Motor	Butterfly	Nonessential Equipment isolation
	1-FCV-67-213	1-1/2	Air	Globe	ERCW to pump room coolers
	1-FCV-67-215	1-1/2	Air	Globe	ERCW to pump room coolers
	2-FCV-67-217	2	Air	Globe	ERCW to pump room coolers
	2-FCV-67-219	2	Air	Globe	ERCW to pump room coolers
	FCV-67-223	24	Motor	Butterfly	ERCW Header 1B to 2A Isolation
	FCV-67-295	2	Motor	Plug	Containment isolation
	FCV-67-296	2	Motor	Plug	Containment isolation
	FCV-67-297	2	Motor	Plug	Containment isolation
	FCV-67-298	2	Motor	Plug	Containment isolation
	2-FCV-67-336	1	Air	Globe	ERCW to pump room coolers
	2-FCV-67-338	1	Air	Globe	ERCW to pump room coolers
	FCV-67-342	2	Air	Globe	ERCW to pump room coolers
	FCV-67-344	2	Air	Globe	ERCW to pump room coolers
	FCV-67-346	1-1/2	Air	Globe	ERCW to pump room coolers
	FCV-67-348	1-1/2	Air	Globe	ERCW to pump room coolers
	FCV-67-350	1-1/2	Air	Globe	ERCW to pump room coolers
	FCV-67-352	1-1/2	Air	Globe	ERCW to pump room coolers
	FCV-67-354	1-1/2	Air	Globe	ERCW to pump room coolers
	FCV-67-356	1-1/2	Air	Globe	ERCW to pump room coolers
	1-FCV-67-458	24	Motor	Butterfly	ERCW Header 1B Isolation
	0-CKV-67-503A	20	Self-actuated	Check	ERCW flow path integrity
	0-CKV-67-503B	20	Self-actuated	Check	ERCW flow path integrity
	0-CKV-67-503C	20	Self-actuated	Check	ERCW flow path integrity
	0-TCV-67-1050-A	3	Self-actuated	Globe	EBR condenser temperature control
	0-TCV-67-1051-A	3	Self-actuated	Globe	MCR condenser temperature control
	0-TCV-67-1052-B	3	Self-actuated	Globe	EBR condenser temperature control

Table 3.9-25 Valves Required To Be Active For Design Basis Events
(Sheet 17 of 23)

System Name	Valve No.	Size Inches	Actuation	Type	Function/Description
Essential Raw Cooling Water (67) (Continued)	TCV-67-1053-B	3	Self-Actuated	Globe	MRC condenser temperature control
	CKV-67-508A	8	Self-Actuated	Check	ERCW flow path integrity
	CKV-67-508B	8	Self-Actuated	Check	ERCW flow path integrity
	CKV-67-517A	10	Self-Actuated	Check	ERCW flow path integrity
	CKV-67-512A	10	Self-Actuated	Check	ERCW flow path integrity
	CKV-67-940A	3	Self-actuated	Check	ERCW flowpath integrity
	CKV-67-935B	3	Self-actuated	Check	ERCW flowpath integrity
	CKV-67-503D	20	Self-actuated	Check	ERCW flowpath integrity
	CKV-67-503E	20	Self-actuated	Check	ERCW flowpath integrity
	CKV-67-503F	20	Self-actuated	Check	ERCW flowpath integrity
	CKV-67-503G	20	Self-actuated	Check	ERCW flowpath integrity
	CKV-67-503H	20	Self-actuated	Check	ERCW flowpath integrity
	CKV-67-575A	1/2	Self-actuated	Check	Containment Isolation
	CKV-67-575B	1/2	Self-actuated	Check	Containment Isolation
	CKV-67-575C	1/2	Self-actuated	Check	Containment Isolation
	CKV-67-575D	1/2	Self-actuated	Check	Containment Isolation
	CKV-67-580A	2	Self-actuated	Check	Containment Isolation
	CKV-67-580B	2	Self-actuated	Check	Containment Isolation
	CKV-67-580C	2	Self-actuated	Check	Containment Isolation
	CKV-67-580D	2	Self-actuated	Check	Containment Isolation
	CKV-67-585A	1/2	Self-actuated	Check	Containment Isolation
	CKV-67-585B	1/2	Self-actuated	Check	Containment Isolation
	CKV-67-585C	1/2	Self-actuated	Check	Containment Isolation
	CKV-67-585D	1/2	Self-actuated	Check	Containment Isolation

Table 3.9-25 Valves Required To Be Active For Design Basis Events
(Sheet 18 of 23)

System Name	Valve No.	Size Inches	Actuation	Type	Function/Description
Essential Raw Cooling Water (67) (Continued)	CKV-67-1054A	1/2	Self-actuated	Check	Containment Isolation
	CKV-67-1054B	1/2	Self-actuated	Check	Containment Isolation
	CKV-67-1054C	1/2	Self-actuated	Check	Containment Isolation
	CKV-67-1054D	1/2	Self-actuated	Check	Containment Isolation
	CKV-67-502A	2	Self-actuated	Check	Air release
	CKV-67-502B	2	Self-actuated	Check	Air release
	CKV-67-502C	2	Self-actuated	Check	Air release
	CKV-67-502D	2	Self-actuated	Check	Air release
	CKV-67-502E	2	Self-actuated	Check	Air release
	CKV-67-502F	2	Self-actuated	Check	Air release
	CKV-67-502G	2	Self-actuated	Check	Air release
	CKV-67-502H	2	Self-actuated	Check	Air release
	FSV-67-1221-A	1	Solenoid	Globe	ERCW Supply
	PCV-67-1222	1	Self-actuated	Regulating	Press Cntr for ERCW to Aux Air Comp A
	TCV-67-1222A	1/2	Self-actuated	Regulating	Throttles ERCW to Aux Air Comp A cyl jacket
	TCV-67-1222B	3/4	Self-actuated	Regulating	Throttles ERCW to Aux Air Comp A cyl jacket
	FSV-67-1223-B	1	Solenoid	Globe	ERCW Supply
	PCV-67-1224	1	Self-actuated	Regulating	Press Cntr for ERCW to Aux Air Comp B
	TCV-67-1224A	1/2	Self-actuated	Regulating	Throttles ERCW to Aux Air Comp B cyl jacket
	TCV-67-1224B	3/4	Self-actuated	Regulating	Throttles ERCW to Aux Air Comp B cyl jacket
Component Cooling Water (70)	FCV-70-85	6	Air	Butterfly	Containment Isolation
	FCV-70-87	3	Motor	Gate	Containment Isolation
	FCV-70-89	6	Motor	Butterfly	Containment Isolation
	FCV-70-90	3	Motor	Gate	Containment Isolation
	FCV-70-92	6	Motor	Butterfly	Containment Isolation

Table 3.9-25 Valves Required To Be Active For Design Basis Events
(Sheet 19 of 23)

System Name	Valve No.	Size Inches	Actuation	Type	Function/Description
Component Cooling Water (70) (Continued)	FCV-70-100	6	Motor	Butterfly	Containment Isolation
	FCV-70-133	3	Motor	Gate	RCP Thermal Barrier Isolation
	FCV-70-134	3	Motor	Gate	Containment Isolation
	FCV-70-140	6	Motor	Butterfly	Containment Isolation
	FCV-70-143	6	Motor	Butterfly	Containment Isolation
	FCV-70-156	18	Motor	Butterfly	RHR Hx Isolation
	FCV-70-194	20	Motor	Butterfly	Spent Fuel Pit Hx Isolation
	FCV-70-197	20	Motor	Butterfly	Spent fuel pit Hx isolation
	0-CKV-70-504	16	Self-actuated	Check	Prevent backflow through CCP
	CKV-70-504A	16	Self-actuated	Check	Prevent backflow through CCP
	CKV-70-504B	16	Self-actuated	Check	Prevent backflow through CCP
	CKV-70-679	3	Self-actuated	Check	Containment isolation CCP
	CKV-70-698	3/4	Self-actuated	Check	Containment isolation CCP
	CKV-70-790	3/4	Self-actuated	Check	Containment isolation
	FCV-70-183	3	Motor	Gate	Sample Hx Isolation
	FCV-70-215	3	Motor	Gate	Sample Hx Isolation
	1-FCV-70-66	2	Air	Angle	CCS surge tank isolation
	2-FCV-70-66	2	Air	Angle	CCS surge tank isolation
	RFV-70-538	3X4	Self actuated	Relief	Surge tank 1A/1B relief
	CKV-70-681-A, B, C, D	1-1/2	Self actuated	Check	Overpressurization protection
	CKV-70-682-A, B, C, D	1-1/2	Self actuated	Check	Overpressurization protection
	CKV-70-687	3/4	Self actuated	Check	RCP thermal barrier isolation
	1-RFV-70-703	3x4	Self actuated	Relief	Excess letdown HX relief
	2-RFV-70-703	3x4	Self actuated	Relief	Excess letdown HX relief
	RFV-70-835	3/4 x 1	Self actuated	Relief	RCP thermal barrier supply relief
Containment Spray System (72)	1, 2-FCV-72-13-B	2	Motor	Globe	Min-flow pump recirculation control valve
	1, 2-FCV-72-34-A	2	Motor	Globe	Min-flow pump recirculation control valve
Primary Water System (81)	FCV-81-12	3	Air	Gate	Primary water to RCS PRT
	CKV-81-502	3	Self-actuated	Gate	Primary water to RCS PRT

Table 3.9-25 Valves Required To Be Active For Design Basis Events
(Sheet 20 of 23)

System Name	Valve No.	Size Inches	Actuation	Type	Function/Description
Standby Diesel Generators (82)	1-FCV-82-160	1.500	Air	Diaph	Flow Cont 1A1 TK A
	1-FSV-82-160-A	0.370	Elec	Sol V	Air ST SOL 1A1 (A)
	1-FCV-82-161	1.500	Air	Diaph	Flow Cont 1A2 TK A
	1-FSV-82-161-A	0.370	Elec	Sol V	Air ST SOL 1A2 (A)
	1-PCV-82-162A	2.000	Air	Diaph	PR RED V 1A1 TK A
	1-PREG-82-162B	0.250	Self	Diaph	PR REG V 1A1 TK A
	1-PCV-82-163A	2.000	Air	Diaph	PR RED V 1A2 TK A
	1-PREG-82-163B	0.250	Self	Diaph	PR REG V 1A2 TK A
	1-FCV-82-170	1.500	Air	Diaph	FLOW CONT 1A1 TK B
	1-FSV-82-170-A	0.370	Elec	Sol V	AIR ST SOL 1A1 (B)
	1-FCV-82-171	1.500	Air	Diaph	FLOW CONT 1A2 TK B
	1-FSV-82-171-A	0.370	Elec	Sol V	AIR ST SOL 1A2 (B)
	1-PCV-82-172A	2.000	Air	Diaph	PR RED V 1A1 TK B
	1-PREG-82-172B	0.250	Self	Diaph	PR REG V 1A1 TK B
	1-PCV-82-173A	2.000	Air	Diaph	PR RED V 1A2 TK B
	1-PREG-82-173B	0.250	Self	Diaph	PR REG V 1A2 TK B
	1-FCV-82-190	1.500	Air	Diaph	FLOW CONT 1B1 TK A
	1-FSV-82-190-A	0.370	Elec	Sol V	AIR ST SOL 1B1(A)
	1-FCV-82-191	1.500	Air	Diaph	FLOW CONT 1B2 TK A
	1-FSV-82-191-A	0.370	Elec	Sol V	AIR ST SOL 1B2 (A)
	1-PCV-82-192A	2.000	Air	Diaph	PR RED V 1B1 TK A
	1-PREG-82-192B	0.250	Self	Diaph	PR REG V 1B1 TK A
	1-PCV-82-193A	2.000	Air	Diaph	PR RED V 1B2 TK A
	1-PREG-82-193B	0.250	Self	Diaph	PR REG V 1B2 TK A
	1-FCV-82-200	1.500	Air	Diaph	FLOW CONT 1B1 TK B
	1-FSV-82-200-A	0.370	Elec	Sol V	AIR ST SOL 1B1 (B)
	1-FCV-82-201	1.500	Air	Diaph	FLOW CONT 1B2 TK B
	1-FSV-82-201-A	0.370	Elec	Sol V	AIR ST SOL 1B2 (B)
	1-PCV-82-202A	2.000	Air	Diaph	PR RED V 1B1 TK B
	1-PREG-82-202B	0.250	Self	Diaph	PR REG V 1B1 TK B
	1-PCV-82-203A	2.000	Air	Diaph	PR RED V 1B2 TK B
	1-PREG-82-203B	0.250	Self	Diaph	PR REG V 1B2 TK B
	2-FCV-82-220	1.500	Air	Diaph	FLOW CONT 2A1 TK A
	2-FSV-82-220-A	0.370	Elec	Sol V	AIR ST SOL 2A1 (A)

Table 3.9-25 Valves Required To Be Active For Design Basis Events
(Sheet 21 of 23)

System Name	Valve No.	Size Inches	Actuation	Type	Function/Description
	2-FCV-82-221	1.500	Air	Diaph	FLOW CONT 2A2 TK A
	2-FSV-82-221-A	0.370	Elec	Sol V	AIR ST SOL 2A2 (A)
	2-PCV-82-222A	2.000	Air	Diaph	PR RED V 2A1 TK A
	2-PREG-82-222B	0.250	Self	Diaph	PR REG V 2A1 TK A
	2-PCV-82-223A	2.000	Air	Diaph	PR RED V 2A2 TK A
	2-PREG-82-223B	0.250	Self	Diaph	PR REG V 2A2 TK A
	2-FCV-82-230	1.500	Air	Diaph	FLOW CONT 2A1 TK B
	2-FSV-82-230-A	0.370	Elec	Sol V	AIR ST SOL 2A1 (B)
	2-FCV-82-231	1.500	Air	Diaph	FLOW CONT 2A2 TK B
	2-FSV-82-231-A	0.370	Elec	Sol V	AIR ST SOL 2A2 (B)
	2-PCV-82-232A	2.000	Air	Diaph	PR RED V 2A1 TK B
	2-PREG-82-232B	0.250	Self	Diaph	PR REG V 2A1 TK B
	2-PCV-82-233A	2.000	Air	Diaph	PR RED V 2A2 TK B
	2-PREG-82-233B	0.250	Self	Diaph	PR REG V 2A2 TK B
	2-FCV-82-250	1.500	Air	Diaph	FLOW CONT 2B1 TK A
	2-FSV-82-250-A	0.370	Elec	Sol V	AIR ST SOL 2B1(A)
	2-FCV-82-251	1.500	Air	Diaph	FLOW CONT 2B2 TK A
	2-FSV-82-251-A	0.370	Elec	Sol V	AIR ST SOL 2B2 (A)
	2-PCV-82-252A	2.000	Air	Diaph	PR RED V 2B1 TK A
	2-PREG-82-252B	0.250	Self	Diaph	PR REG V 2B1 TK A
	2-PCV-82-253A	2.000	Air	Diaph	PR RED V 2B2 TK A
	2-PREG-82-253B	0.250	Self	Diaph	PR REG V 2B2 TK A
	2-FCV-82-260	1.500	Air	Diaph	FLOW CONT 2B1 TK B
	2-FSV-82-260-A	0.370	Elec	Sol V	AIR ST SOL 2B1 (B)
	2-FCV-82-261	1.500	Air	Diaph	FLOW CONT 2B2 TK B
	2-FSV-82-261-A	0.370	Elec	Sol V	AIR ST SOL 2B2 (B)
	2-PCV-82-262A	2.000	Air	Diaph	PR RED V 2B1 TK B
	2-PREG-82-262B	0.250	Self	Diaph	PR REG V 2B1 TK B
	2-PCV-82-263A	2.000	Air	Diaph	PR RED V 2B2 TK B
	2-PREG-82-263B	0.250	Self	Diaph	PR REG V 2B2 TK B

Table 3.9-25 Valves Required To Be Active For Design Basis Events
(Sheet 22 of 23)

System Name	Valve No.	Size Inches	Actuation	Type	Function/Description
Standby Diesel Generators (82) (Continued)	1,2-CKV-82-502A1-A	0.750	Self	Check	TK SUP A1 (A)
	1,2-CKV-82-502B1-B	0.750	Self	Check	TK SUP B1 (A)
	1,2-CKV-82-505A1-A	0.750	Self	Check	TK SUP A1 (B)
	1,2-CKV-82-505B1-B	0.750	Self	Check	TK SUP B1 (B)
	1,2-CKV-82-509A1-A	0.750	Self	Check	CROSS CONN CK A1
	1,2-CKV-82-509B1-B	0.750	Self	Check	CROSS CONN CK B1
	1,2-CKV-82-523A1-A	0.750	Self	Check	RELAY CK A1 (A)
	1,2-CKV-82-523B1-B	0.750	Self	Check	RELAY CK B1 (A)
	1,2-SPV-82-524A1-A	0.375	Self	Check	SLIDE VLV A1
	1,2-SPV-82-524B1-B	0.375	Self	Check	SLIDE VLV B1
	1,2-CKV-82-531A1-A	0.750	Self	Check	RELAY CK A1 (B)
	1,2-CKV-82-531B1-B	0.750	Self	Check	RELAY CK B1 (B)
	1,2-CKV-82-536-A2-A	0.750	Self	Check	TK SUP A2 (A)
	1,2-CKV-82-536B2-B	0.750	Self	Check	TK SUP B2 (A)
	1,2-CKV-82-539-A2-A	0.750	Self	Check	TK SUP A2 (B)
	1,2-CKV-82-539B2-B	0.750	Self	Check	TK SUP B2 (B)
	1,2-CKV-82-543-A2-A	0.750	Self	Check	CROSS CONN CK A2
	1,2-CKV-82-543B2-B	0.750	Self	Check	CROSS CONN CK B2
	1,2-CKV-82-557-A2-A	0.750	Self	Check	RELAY CK A2 (A)
	1,2-CKV-82-557B2-B	0.750	Self	Check	RELAY CK B2 (A)
	1,2-SPV-82-558-A2-A	0.375	Self	Check	SLIDE VLV A2
	1,2-SPV-82-558B2-B	0.375	Self	Check	SLIDE VLV B2
	1,2-CKV-82-565-A2-A	0.750	Self	Check	RELAY CK A2 (B)
	1,2-CKV-82-565B2-B	0.750	Self	Check	RELAY CK B2 (B)

Table 3.9-25 Valves Required To Be Active For Design Basis Events
(Sheet 23 of 23)

System Name	Valve No.	Size Inches	Actuation	Type	Function/Description
Radiation Monitoring (90)	1,2-FCV-90-107	1-1/2	Motor	Gate	Containment Isolation
	1,2-FCV-90-108	1-1/2	Motor	Gate	Containment Isolation
	1,2-FCV-90-109	1-1/2	Motor	Gate	Containment Isolation
	1,2-FCV-90-110	1-1/2	Motor	Gate	Containment Isolation
	1,2-FCV-90-111	1-1/2	Motor	Gate	Containment Isolation
	1,2-FCV-90-113	1-1/2	Motor	Gate	Containment Isolation
	1,2-FCV-90-114	1-1/2	Motor	Gate	Containment Isolation
	1,2-FCV-90-115	1-1/2	Motor	Gate	Containment Isolation
	1,2-FCV-90-116	1-1/2	Motor	Gate	Containment Isolation
	1,2-FCV-90-117	1-1/2	Motor	Gate	Containment Isolation

**Valves not prefixed by 1-, 2-, or 0- are undestood to be prefixed by 1- and 2-.

Table 3.9-26 Inservice Inspection Category Valves (Sheet 1 of 6)

SYSTEM	CATEGORY	CLASS	VALVES
MAIN STEAM 47W801-1	B	B	FCV-1-4, FCV-1-11, FCV-1-22, FCV-1-29, FCV-1-147, FCV-1-148, FCV-1-149, FCV-1-150
	B	B	PCV-1-5, PCV-1-12, PCV-1-23, PCV-1-30, 1-ISV-1-619, 1-ISV-1-620, 1-ISV-1-621, 1-ISV-1-622
	C	B	1-512, 1-513, 1-514, 1-515, 1-516, 1-517, 1-518, 1-519, 1-520, 1-521, 1,522, 1-523, 1-524, 1-525, 1-526, 1-527, 1-528, 1-529, 1-530, 1-531
STEAM GENERATOR BLOWDOWN SYSTEM 47W801-2	B	B	FCV-1-7, FCV-1-14, FCV-1-25, FCV-1-32, FCV-1-181, FCV-1-182, FCV-1-183, FCV-1-184
CONDENSATE 47W804-1	C	Note 1	2-667
FEEDWATER 47W803-1	B	B	FCV-3-33, FCV-3-47, FCV-3-87, FCV-3-100 2-FCV-3-185, 2-FCV-3-186, 2-FCV-3-187, 2-FCV-3-188, FCV-3-236, FCV-3-239, FCV-3-242, FCV-3-245
	B	Note 1 & C	FCV-3-35, FCV-3-35A, FCV-3-48, FCV-3-48A, FCV-3-90, FCV-3-90A, FCV-3-103, FCV-3-103A
	C	B	3-508, 3-509, 3-510, 3-511, 3-644, 3-645, 3-655, 3-656, 3-670, 3-679
	AC B	B	3-638, 3-652, 3-669, 3-678
AUXILIARY FEEDWATER 47W803-2	B	B	FCV-1-15, FCV-1-16, FCV-1-18
	B	C	LCV-3-148, LCV-3-148A, LCV-3-156, LCV-3-156A, LCV-3-164, LCV-3-164A, LCV-3-171, LCV-3-171A, LCV-3-172, LCV-3-173, LCV-3-174, FCV-3-175, FCV-1-17, FCV-3-116A, FCV-3-116B, FCV-3-126A, FCV-3-126B, FCV-3-136A, FCV-3-136B, FCV-3-179A, FCV-3-179B,FCV-1-51, PCV-3-122, PCV-3-132, FCV-3-355, FCV-3-359
	C	B	3-830, 3-831, 3-832, 3-833, 3-861, 3-862, 3-864, 3-871, 3-872, 3-873, 3-874, 1-891, 1-892, 3-921, 3-922
	C	C	3-805, 3-806, 3-810, 3-814, 3-815, 3-818
CHEMICAL & VOLUME CONTROL 47W809-1, -2, -3, -5	A	B	FCV-62-61, FCV-62-63, FCV-62-72, FCV-62-73 FCV-62-74, FCV-62-77, FCV-62-76

Table 3.9-26 Inservice Inspection Category Valves (Sheet 2 of 6)

SYSTEM	CATEGORY	CLASS	VALVES
	AC	B	62-639, 62-662, 62-523, 62-525, 62-530, 62-532
	B	B	LCV-62-132, LCV-62-133, LCV-62-135, LCV-62-136, FCV-62-1228, FCV-62-1229, FCV-62-90, FCV-62-91, PCV-62-81
	C	B	62-504, 62-505, 62-636, 62-649, 62-675, 62-688, 62-1221, 62-1222
	B	C	FCV-62-138
	C	C	CKV-62-930, CKV-62-1052-A, CKV-62-1052-B
	C	B	RFV-62-955, RFV-62-1079
RESIDUAL HEAT REMOVAL 47W810-1	A	A	FCV-74-1, FCV-74-2, FCV-74-8, FCV-74-9
	B	B	FCV-74-3, FCV-74-12, FCV-74-21,FCV-74-24, FCV-74-33, FCV-74-35
	C	B	74-505, 74-514, 74-515, 74-544, 74-545
SAFETY INJECTION 47W811-1	A	B	FCV-63-23, FCV-63-64, FCV-63-71, FCV-63-84
	AC	A	63-543, 63-545, 63-547, 63-549, 63-551, 63-553, 63-555, 63-557, 63-558, 63-559, 63-560, 63-561, 63-562, 63-563, 63-622, 63-623, 63-624, 63-625, 63-632, 63-633, 63-634, 63-635, 63-640, 63-641, 63-643, 63-644, 63-581, 63-586, 63-587, 63-588, 63-589
	AC	B	CKV-63-524, CKV-63-526, CKV-63-528, CKV-63-530, CKV-63-868, RFV-63-28
	B	B	FCV-63-1, FCV-63-3, FCV-63-4, FCV-63-5, FCV-63-6, FCV-63-7, FCV-63-8, FCV-63-11, FCV-63-22, FCV-63-25, FCV-63-26, FCV-63-47, FCV-63-48, FCV-63-72, FCV-63-73, FCV-63-93, FCV-63-94, FCV-63-152, FCV-63-153, FCV-63-156, FCV-63-157, FCV-63-172, FCV-63-175, FCV-63-185
	C	B	63-502, 63-510, 63-511, 63-534, 63-535, 63-536, 63-577, 63-602, 63-603, 63-604, 63-605, 63-626, 63-627, 63-637, 63-725, 63-835,

Table 3.9-26 Inservice Inspection Category Valves (Sheet 3 of 6)

SYSTEM	CATEGORY	CLASS	VALVES
CONTAINMENT SPRAY 47W812-1 47W859-4 47W859-3	A	B	FCV-72-2, FCV-72-39, FCV-72-40, FCV-72-41
	B	B	FCV-72-13, FCV-72-21, FCV-72-22, FCV-72-34, FCV-72-44, FCV-72-45
	C	B	72-506, 72-507, 72-508, 72-509, 72-524, 72-525, 72-548, 72-549, 72-562, 72-563
REACTOR COOLANT 47W813-1	A	B	FCV-68-305, FCV-68-307, FCV-68-308
	B	A	FCV-68-332, FCV-68-333, PCV-68-334, PCV-68-340A
	B	B	FSV-68-394, FSV-68-395, FSV-68-396, FSV-68-397
	C	A	68-563, 68-564, 68-565
	C	B	68-559, 68-849
ESSENTIAL RAW COOLING WATER 47W845-1,2,3,4, 5, 7	A	B	FCV-67-83, FCV-67-87, FCV-67-88, 1-FCV-67-89,FCV-67-91, FCV-67-95, FCV-67-96, 1-FCV-67-97, FCV-67-99, FCV-67-103, FCV-67-104, 1-FCV-67-105, FCV-67-107, FCV-67-111, FCV-67-112, 1-FCV-67-113, FCV-67-130, FCV-67-131, FCV-67-133, FCV-67-134, FCV-67-138, FCV-67-139, FCV-67-141, FCV-67-142, FCV-67-295, FCV-67-296, FCV-67-297, FCV-67-298
	AC	B	67-575A, 67-575B, 67-575C, 67-575D, 67-580A, 67-580B, 67-580C, 67-580D, 67-585A, 67-585B, 67-585C, 67-585D, 1-67-1054A, 1-67-1054B, 1-67-1054C, 1-67-1054D
	B	C	FCV-67-65, FCV-67-68, FCV-67-123, FCV-67-124, FCV-67-125, FCV-67-126, FCV-67-143, FCV-67-144, FCV-67-152, FCV-67-162, FCV-67-164, FCV-67-176, FCV-67-182, FCV-67-184, FCV-67-186, FCV-67-205, FCV-67-208, FCV-67-213, FCV-67-215, FCV-67-342, FCV-67-344, FCV-67-346, FCV-67-348, FCV-67-350, FCV-67-352, FCV-67-354, FCV-67-356, 2-FCV-67-217, 2-FCV-67-219, 2-FCV-67-336, 2-FCV-67-338, FCV-67-9A, FCV-67-9B, FCV-67-10A, FCV-67-10B, 2-FCV-67-354, 2-FCV-67-356

Table 3.9-26 Inservice Inspection Category Valves (Sheet 4 of 6)

SYSTEM	CATEGORY	CLASS	VALVES
	C	C	67-503A, 67-503B, 67-503C, 67-503D, 67-503E, 67-503F, 67-503G, 67-503H, 67-508A, 67-508B, 1-67-508A, 2-67-508A, 1-67-508B, 2-67-508B, 1-67-513A, 2-67-513A, 1-67-513B, 2-67-513B, 67-502A thru H, 1-67-940A, 2-67-935B, 0-RFV-67-671, 0-RFV-67-672, RFV-67-539A, RFV-67-539B
COMPONENT COOLING WATER 47W859-1, -2, -4 472812-1	A	B	FCV-70-85, FCV-70-87, FCV-70-89, FCV-70-90, FCV-70-92, 1-FCV-70-100, FCV-70-134, FCV-70-140, FCV-70-143
	AC	B	70-679, 70-687, 70-698, 70-703, 1-70-790
	B	C	FCV-70-66, FCV-70-133, FCV-70-156, FCV-70-183, FCV-70-197, FCV-70-215
	C	C	70-504, 70-504A, 70-504B, 70-538, 70-753, 70-539, 70-681A, 70-681B, 70-681C, 70-681D, 70-682A, 70-682B, 70-682C, 70-682D, RFV-70-551A, RFV-70-551B, RFV-70-556A, RFV-70-556B, RFV-70-565A, RFV-70-565B, RFV-70-578, RFV-70-835
PRIMARY WATER 47W819-1	A	B	FCV-81-12
	AC	B	81-502
WASTE DISPOSAL 47W830-1, 47W851-1	A	B	FCV-77-9, FCV-77-10, FCV-77-16, FCV-70-17, FCV-77-18, FCV-77-19, FCV-77-20, FCV-77-127, FCV-77-128
	AC	B	77-2875
FIRE PROTECTION 47W850-9	A	B	FCV-26-240, FCV-26-243
	AC	B	26-1260, 26-1296
HEATING AND VENTILATION 47W866-1	A	B	FCV-30-7, FCV-30-8, FCV-30-9, FCV-30-10, FCV-30-14, FCV-30-15, FCV-30-16, FCV-30-17, FCV-30-19, FCV-30-20, FCV-30-37, FCV-30-40, FCV-30-50, FCV-30-51, FCV-30-52, FCV-30-53, FCV-30-56, FCV-30-57, FCV-30-58, FCV-30-59, FSV-30-134, FSV-30-135
AIR CONDITIONING 47W865-5, -3, -7, -8	A	B	FCV-31-305, FCV-31-306, FCV-31-308, FCV-31-309, FCV-31-326, FCV-31-327, FCV-31-329, FCV-31-330

Table 3.9-26 Inservice Inspection Category Valves (Sheet 5 of 6)

SYSTEM	CATEGORY	CLASS	VALVES
AIR CONDITIONING (continued) 47W865-5, -3, -7, -8	AC	B	31-3378, 31-3392, 31-3407, 31-3421
	C	Note 1	0-31-2193, 0-31-2235, 0-31-2210, 0-31-2252, 0-31-2307, 0-31-2364, 0-31-2326, 0-31-2383, 0-31-2607. 0-31-2649, 0-31-2623, 0-31-2665
CONTROL AIR 47W848-1	A	B	FCV-32-80, FCV-32-102, FCV-32-110, BYV-32-288, BYV-32-298, BYV-32-308
	AC	B	32-293, 32-303, 32-313
SERVICE AIR 47W846-2	A	B	33-713, 33-714
RADIATION SAMPLING 47W625-1, -2, -7, -11, -15	A	B	FCV-43-2, FCV-43-3, FCV-43-11, FCV-43-12, FCV-43-22, FCV-43-23, FCV-43-34, FCV-43-35, FCV-43-75, FCV-43-77, FCV-43-201, FCV-43-202, FCV-43-207, FCV-43-208, FSV-43-250, FSV-43-251, FSV-43-287, FSV-43-288, FSV-43-307, FSV-43-309, FSV-43-310, FSV-43-318, FSV-43-319, FSV-43-325, FSV-43-341, FSV-43-342
	B	B	FCV-43-54D, FCV-43-55, FCV-43-56D, FCV-43-58, FCV-43-59D, FCV-43-61, FCV-43-63D, FCV-43-64
	AC	B	43-834, 43-841, 43-883, 43-884
SYSTEM TEST FACILITY 47W331-3	A	B	52-500, 52-501, 52-502, 52-503, 52-504, 52-505, 52-506, 52-507
DEMINERALIZED WATER AND CASK DECONTAMINATION 47W856-1	A	B	59-522, 59-698
ICE CONDENSER 47W814-2	A	B	FCV-61-96, FCV-61-97, FCV-61-110, FCV-61-122, FCV-61-191, FCV-61-192, FCV-61-193, FCV-61-194
	AC	B	61-533, 61-680, 61-692, 61-745
	C	Note 1	61-658, 61-659, 61-660, 61-661, 61-662, 61-663, 61-664, 61-665, 61-666, 61-667, 61-668, 61-669, 61-670, 61-671, 61-672, 61-673, 61-674, 61-675, 61-676, 61-677
BORATION MAKEUP 47W809-7	A	B	84-530
RADIATION MONITORING 47W610-90-3	A	B	FCV-90-107, FCV-90-108, FCV-90-109, FCV-90-110, FCV-90-111, FCV-90-113, FCV-90-114, FCV-90-115, FCV-90-116, FCV-90-117

Table 3.9-26 Inservice Inspection Category Valves (Sheet 6 of 6)

SYSTEM	CATEGORY	CLASS	VALVES
FUEL POOL COOLING AND CLEANING 47W855-1	A	B	78-557, 78-558, 78-560, 78-561

Notes:

Note 1: Not Constructed to an ASME Code Class.

Note 2: Valves listed in Table 3.9-26 are not necessarily Reg Guide 1.48 active and/or event active. Non-active valves may be added for convenience of plant operations to improve a valve's reliability, etc. All active valves are reflected in Tables 3.9-17 and 3.9-25.

Table 3.9-27 Active Section III ASME-Coded Components (Except Valves) In TVA Scope Of Supply(1) (Sheet 1 of 2)

System Name	Component	ANS Safety Class	Normal Mode	Post LOCA Mode	Reason
Feedwater (3)	Auxiliary feedwater pumps:				
	Motor driven				
	1A-A	2B	OFF	ON	Provide heat removal for chapter 15 events.
	1B-B	2B	OFF	ON	
	2A-A	2B	OFF	ON	
	2B-B	2B	OFF	ON	
	Steam driven				
	1A-S	2B	OFF	ON	Provide heat removal for chapter 15 events.
	2A-S	2B	OFF	ON	
Control Air (32)	Auxiliary air compressors A & B	2B	OFF	ON	Provide control air for safety-related equipment.
Essential Raw Cooling Water (67)	ERCW pump A-A	2B	ON	ON	Provide cooling water flow for component cooling system and other heat removal systems.
	B-A	2B	ON	ON	
	C-A	2B	ON	ON	
	D-A	2B	ON	ON	
	E-B	2B	ON	ON	
	F-B	2B	ON	ON	
	G-B	2B	ON	ON	
	H-B	2B	ON	ON	
	Screen Wash Pump	2B	ON	ON	Prevents fouling of ERCW pump station.
	1AA	2B	ON	ON	
	2AA	2B	ON	ON	
	1BB	2B	ON	ON	
	2BB	2B	ON	ON	

Table 3.9-27 Active Section III ASME-Coded Components (Except Valves) In TVA Scope Of Supply(1) (Sheet 2 of 2)

System Name	Component	ANS Safety Class	Normal Mode	Post LOCA Mode	Reason
Component Cooling (70)	Component cooling pumps1A	2B	ON	ON	Provide cooling water flow for required equipment served by the CCS.
	1B	2B	ON	ON	
	2A	2B	ON	ON	
	2B	2B	ON	ON	
	C-S	2B	ON	ON	
	1A TB Booster	2B	ON	OFF	Provides flow RCP thermal barriers.
	1B TB Booster	2B	ON	OFF	
	2A TB Booster	2B	ON	OFF	
	2B TB Booster	2B	ON	OFF	

Note:(1) As defined in Regulatory Guide 1.48

Table 3.9-28 Active Pumps For Primary Fluid Systems In Westinghouse Scope Of Supply As Applied To Watts Bar Nuclear Plant

System Name	Component	ANS Safety Class	Normal Mode	POST LOCA Mode	Reason
CVCS (62)	Centrifugal Charging Pumps				
	1A-A	2A	ON	ON	To provide emergency core cooling, reactivity control and RCP seal injection flow.
	2A-A	2A	ON	ON	
	1B-B	2A	ON	ON	
	2B-2B	2A	ON	ON	
Safety Injection Systems (63)	SIS Pump				
	1A-A	2A	OFF	ON	To provide emergency core cooling and reactivity control.
	1B-B	2A	OFF	ON	
	2A-A	2A	OFF	ON	
	2B-B	2A	OFF	ON	
Containment Spray (72)	Pump				
	1A-A	2A	OFF	ON	Provide cooling water flow to control containment temperature and pressure.
	2A-A	2A	OFF	ON	
	1B-B	2A	OFF	ON	
	2B-B	2A	OFF	ON	
Residual Heat Removal (74)	Pump				
	1A-A	2A	OFF	ON	To provide emergency core cooling and reactivity control and containment temperature and pressure control.
	1B-B	2A	OFF	ON	
	2A-A	2A	OFF	ON	
	2B-B	2A	OFF	ON	
Spent Fuel Pool Cooling (78)	Pump				Provide adequate spent fuel cooling.
	A-A	2B	ON	ON	
	B-B	2B	ON	ON	
	C-S	2B	OFF	OFF	

THIS PAGE INTENTIONALLY BLANK

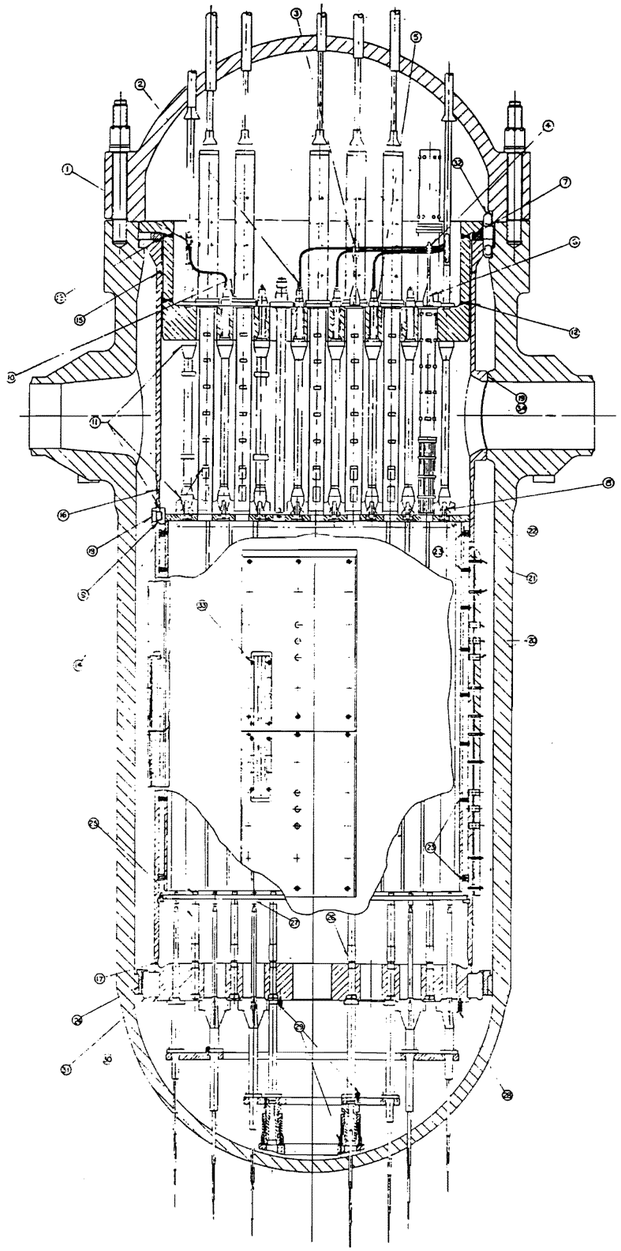

SEE NOTES	STEP	FEATURES TO BE EXAMINED	COMMENTS AND OBSERVATIONS BEFORE FUNCTIONAL TEST	COMMENTS AND OBSERVATIONS AFTER FUNCTIONAL TEST
1	1	THERMOCOUPLE CONDUIT CLAMPS INSIDE THE THERMOCOUPLE COLUMN.	NO APPARENT DEFECTS	NO APPARENT DEFECTS
1,5	2	CONDUIT SWAGELOK FITTINGS, THEIR BANDINGS, AND THE TAB TYPE LOCKS.	NO APPARENT DEFECTS	NO APPARENT DEFECTS
1	3	CLAMP ARRANGEMENTS AT THE MOUNTING BRACKET LOCATIONS.	ACCEPTED	NO APPARENT DEFECTS
1	4	CONDUIT FITTING TO SUPPORT BRACKET WELDS ADJACENT TO T/C COLUMNS.	NO APPARENT DEFECTS	NO APPARENT DEFECTS
1	5	UPPER SUPPORT COLUMN NUT TO EXTENSION WELDS.	NO APPARENT DEFECTS	NO APPARENT DEFECTS
1	6	ACCESSIBLE CONDUIT SUPPORT BRACKET WELDS.	ACCEPTED	NO APPARENT DEFECTS
6	7	HOLD DOWN SPRING INTERFACE SURFACE CONDITION.	NO DEFECTS	NO APPARENT DEFECTS
1	8	ACCESSIBLE WELDS ON SUPPORT COLUMN LOWER NOZZLES.	NO APPARENT DEFECTS	NO APPARENT DEFECTS
3,6	9	UPPER CORE PLATE INSERTS.	NO APPARENT DEFECTS	NO APPARENT DEFECTS
2	10	THERMOCOUPLE COLUMN, FLOW COLUMN, AND GUIDE TUBE SCREW LOCKING DEVICES.	NO APPARENT DEFECTS	NO APPARENT DEFECTS
2	11	ACCESSIBLE SUPPORT COLUMN, AND CORE PLATE INSERT SCREW LOCKING DEVICES.	ACCEPTED	NO APPARENT DEFECTS
1	12	UPPER SUPPORT SKIRT TO PLATE GIRTH WELD.	NO APPARENT DEFECTS	NO APPARENT DEFECTS
1	13	UPPER SUPPORT SKIRT TO FLANGE GIRTH WELD.	NO APPARENT DEFECTS	NO APPARENT DEFECTS
1	14	ACCESSIBLE GUIDE TUBE WELDS.	NO APPARENT DEFECTS	NO APPARENT DEFECTS
1	15	UPPER BARREL TO FLANGE GIRTH WELD.	NO APPARENT DEFECTS	NO APPARENT DEFECTS
1	16	UPPER BARREL TO LOWER BARREL GIRTH WELD.	NO APPARENT DEFECTS	NO APPARENT DEFECTS
1	17	LOWER BARREL TO CORE SUPPORT GIRTH WELD.	NO APPARENT DEFECTS	NO APPARENT DEFECTS
1,4	18	UPPER CORE PLATE ALIGNING PIN WELDS AND BEARING SURFACES.	ACCEPTED	NO APPARENT DEFECTS
6	19	OUTLET NOZZLE INTERFACE SURFACE CONDITION.	ACCEPTED	NO APPARENT DEFECTS
1	20	NEUTRON SHIELD PANEL DOWEL PIN COVER PLATE WELDS.	ACCEPTED	NO APPARENT DEFECTS
1,2	21	NEUTRON SHIELD PANEL SCREW LOCKING DEVICES.	ACCEPTED	NO APPARENT DEFECTS
10	22	INTERFACE SURFACES AT THE SPACER PADS ALONG THE TOP AND BOTTOM ENDS OF THE NEUTRON PANELS.	NO APPARENT DEFECTS	NO APPARENT DEFECTS
1	23	BAFFLE ASSEMBLY SCREW LOCKING ARRANGEMENTS AT THE TWO TOP AND THE TWO BOTTOM FORMER ELEVATIONS.	ACCEPTED	NO APPARENT DEFECTS
1,3,4	24	VESSEL CLEVIS LOCKING ARRANGEMENTS AND BEARING SURFACES.	NO APPARENT DEFECTS	NO APPARENT DEFECTS
1,2,7	25	CORE SUPPORT COLUMNS AND THEIR SCREW LOCKING DEVICES.	ACCEPTED	NO APPARENT DEFECTS
8	26	CORE SUPPORT COLUMN ADJUSTING SLEEVES.	ACCEPTED	NO APPARENT DEFECTS
9	27	ACCESSIBLE (2) INSTRUMENTATION GUIDE COLUMN LOCKING COLLARS NEAREST THE MANWAY.	NO APPARENT DEFECTS	NO APPARENT DEFECTS
1,2,10	28	LOCKING DEVICES AND CONTACT OF THE CRUCIFORM SHAPED BOTTOM INSTRUMENTATION GUIDE COLUMNS WHERE ATTACHED TO THE CORE SUPPORT AND THE PLATES.	NO DEFECTS	NO APPARENT DEFECTS
1,2	29	LOCKING DEVICES OF THE SECONDARY CORE SUPPORT BUTT COLUMNS AT THE CORE SUPPORT, THE PLATE AND BASE PLATE.	ACCEPTED	NO APPARENT DEFECTS
1	30	RADIAL SUPPORT KEY WELDS	ACCEPTED	NO APPARENT DEFECTS
1,4	31	RADIAL SUPPORT KEY LOCKING ARRANGEMENTS AND BEARING SURFACES.	NO DEFECTS	NO APPARENT DEFECTS
1,4	32	HEAD AND VESSEL ALIGNING PIN SCREW LOCKING DEVICES AND BEARING SURFACES.	NO DEFECTS	NO APPARENT DEFECTS
1,2	33	IRRADIATION SPECIMEN GUIDE SCREW LOCKING DEVICES AND DOWEL PINS	NO DEFECTS	NO APPARENT DEFECTS
6	34	VESSEL NOZZLE INTERFACE SURFACE CONDITION.	NO DEFECTS	NO APPARENT DEFECTS

NOTES

1. VISUALLY EXAMINE WELDS USING 5-10X MAGNIFICATION. NO CRACKS ALLOWED.
2. VERIFY THAT LOCKING DEVICES ARE CRIMPED AND UNDAMAGED.
3. VERIFY THAT INSERTS ARE SEATED (.0015 FEELER MUST NOT PASS THRU INTERFACE).
4. VISUALLY EXAMINE FACES FOR DAMAGE USING 5-10X MAGNIFICATION.
5. VERIFY THAT FITTINGS ARE TIGHT.
6. VISUALLY EXAMINE INTERFACE SURFACES FOR ANY EVIDENCE OF DAMAGE.
7. VERIFY THAT ACCESSIBLE COLUMNS ARE SEATED ON LOWER CORE PLATE. A .0015 FEELER MUST NOT PASS THRU 90°
8. VERIFY THAT ACCESSIBLE SLEEVES ARE SEATED ON COLUMNS. A .0015 FEELER MUST NOT PASS THRU 90°.
9. VERIFY THAT LOCKING COLLARS ARE TIGHT. NO MOVEMENT ALLOWED.
10. VERIFY SEATING USING A .0015 FEELER GAGE. FEELER MUST NOT PASS THRU 90°.

Revised by Amendment 55

WATTS BAR NUCLEAR PLANT
FINAL SAFETY
ANALYSIS REPORT

VIBRATION CHECK-OUT
FUNCTIONAL TEST INSPECTION
DATA

FIGURE 3.9-1

Figure 3.9-1 Vibration Check-Out Functional Test Inspection Data

THIS PAGE INTENTIONALLY BLANK

3.10 SEISMIC DESIGN OF CATEGORY I INSTRUMENTATION AND ELECTRICAL EQUIPMENT

Seismic Category I instrumentation and electrical equipment for the Watts Bar Nuclear Plant was either furnished by Westinghouse or purchased by TVA. TVA's seismic qualification program for instrumentation and electrical equipment at Watts Bar is based on the requirements of IEEE 344-1971 and the NRC Standard Review Plan, Section 3.10 (specifically, acceptance criteria for plants with Construction Permit application docketed before October 27, 1972) as discussed in Section 3.7.3.16.

Instrumentation and electrical equipment was purchased in assemblies except for local panel instrumentation as described in Section 3.10.1. TVA provided the vendor with a required response spectrum as a part of the equipment specification in order that the vendor could qualify the equipment. The derivation of the response spectrum is described in Section 3.7.

3.10.1 Seismic Qualification Criteria

TVA Supplied

Class 1E Power Equipment

Table 3.10-1 lists the procurement packages for Class 1E power equipment. TVA's seismic qualification criteria is based on IEEE 344-1971 or IEEE 344-1975 as discussed above.

The capability of ESF circuits and the Class 1E system to withstand seismic disturbances is established by seismic analysis and/or testing of each system component. The qualification criteria used in the design of Seismic Category I electrical equipment are given below.

(1) Safety-related equipment designated as Seismic Category I, when subjected to the vertical and horizontal acceleration of the safe shutdown earthquake (SSE), shall perform as follows:

(a) Equipment shall retain its structural integrity during and after the seismic event.

(b) Equipment shall be capable of performing its design function during and after the seismic event.

(c) Maximum displacement of the equipment during the earthquake shall not cause loss of function of any externally connected parts, such as conduit, cable, or bus connections.

Equipment anchorage/support design is discussed in Section 3.10.3.1. Other considerations for the seismic qualification of Category I electrical equipment are described in Section 3.7.3.

Local Instrumentation

TVA supplied instruments were classified as Seismic Category I in accordance with the system served and instrument function. Seismic Category I systems are qualified in accordance with IEEE-344-1971 or 1975, as applicable, and are listed in Table 3.10-1.

Type testing for seismic qualification has been performed on the Seismic Category I instruments. The active instruments are capable of performing their function during and following a SSE. They are qualified to the response acceleration which exceeds the response of the support structure. Tests and/or analyses were conducted on critical rack-instrumentation configurations to confirm the conservatism of the seismic test level for the instruments.

Westinghouse Supplied (Unit 1 only)

The reactor trip system, and engineered safety features actuation system are designed so that they are capable of providing the necessary protective actions during and after a SSE; therefore, the reactor protection system is capable of tripping the reactor during and after a SSE. The engineered safety features actuation system and the safety features systems are designed to initiate their protective functions during and after an SSE.

The following list identifies the instrumentation and electrical equipment requiring seismic qualification by the supplier of the Nuclear Steam Supply System (NSSS).

(1) Foxboro Model E-11 pressure transmitter and Model E-13 differential pressure transmitter.
(2) Foxboro Process Control Equipment cabinets.
(3) Westinghouse Solid-State Protection System cabinets.
(4) Nuclear Instrumentation System cabinets.
(5) Safeguards Test Racks.
(6) Resistance Temperature Detectors.
(7) Power range Neutron Detectors.
(8) Reactor trip breakers.
(9) Barton Models 332 and 386 differential pressure transmitters.
(10) Eagle-21 Process Protection System

Seismic qualification testing of Items 1 through 9 is documented in References [1] through [10]. Reference [10] presents the theory and practice, as well as justification, for the use of single axis sine beat test inputs used in the seismic qualification of electrical equipment. In addition, it is noted that Westinghouse has conducted a seismic qualification "Demonstration Test Program" (reference Letter NS-CE-692, C. Eicheldinger (W), to D. B. Vassallo (NRC), 7/10/75) to confirm equipment operability during a seismic event. This program is documented in References [12] through [15] (Proprietary) and References [16] through [20] (Non-Proprietary). Seismic qualification testing of Item 10 to IEEE 344-1975 is documented in References [21], [22], and [23].

The Watts Bar Nuclear Plant complies with paragraph IV, "Conclusions and Regulatory Positions" of the "Mechanical Engineering Branch Report on Seismic Audit of Westinghouse Electrical Equipment." All topical reports have been completed and are included in the reference list. The non-proprietary topical reports have been referenced as a group above. The structural capability of the NIS rack is discussed in References [14], [19], and [24].

The demonstration test program, in conjunction with the justification for the use of single axis sine beat tests, presented in WCAP-8373, and the original tests, documented in References [2] through [10], meet the requirements of IEEE Standard 344-1975 "IEEE Recommended Practices for Seismic Qualification of Class 1E Equipment for Nuclear Power Generating Stations" for the seismic qualification of Westinghouse electrical equipment outside of containment. Environmental qualification for equipment inside of containment is described in Section 3.11.

The peak accelerations used in the type testing are conservative values that are checked against those derived by structural analyses of SSE loadings of the Watts Bar Nuclear Plant. For the SSE there may be permanent deformation of the equipment provided that the capability to perform its function is maintained.

Resistance temperature detectors used to sense the temperature in the main coolant loops are rigid, ruggedly built devices designed to withstand the high temperature, high pressure, and flow vibration induced acceleration forces which they are subjected to when installed in the coolant loops. The natural frequency of this device is designed to be higher than the frequencies associated with the seismic disturbance. Seismic qualification of these resistance temperature detectors is presented in Reference [9].

The nuclear instrumentation system power range neutron detector has been vibration tested in both the transverse (horizontal) direction and longitudinal (vertical) direction at acceleration levels greater than those expected during a seismic disturbance at the Watts Bar Nuclear Plant site. Detector current measurements were made during the tests and neutron sensitivity, resistance, and capacitance checks were made after the test. No significant changes were seen. There was no mechanical damage to the detector.

Typical switches and indicators which could defeat automatic operation of a required safety function have been tested to determine their ability to withstand seismic excitation without malfunction. The control boards are stiff and past experience indicates that the amplification due to the board structure is sufficiently low so that the acceleration seen by the device is considerably less than that used in testing.

All safety-related instruments of the reactor protection system and the engineered safety feature circuits are mounted on Seismic Category I supporting structures. They are designed to withstand horizontal and vertical accelerations at each floor level for the SSE. The instrument supporting structures located throughout the plant (local panels) have been standardized in design and have been seismically qualified by testing. The local panels were tested using response spectra for the highest elevation

on which any of these panels are mounted. The test criteria were in accordance with IEEE 344-1971 or IEEE 344-1975, as discussed above.

Where space requirements preclude the use of the standard local panels, a small wall-mounted panel is used. This panel is qualified, to the same criteria as the local panels, by analysis and/or test.

Reactor Protection System (Unit 2 only)

The reactor trip system, and engineered safety features actuation system are designed so that they are capable of providing the necessary protective actions during and after a SSE; therefore, the reactor protection system is capable of tripping the reactor during and after a SSE. The engineered safety features actuation system and the safety features systems are designed to initiate their protective functions during and after an SSE.

The following list identifies the instrumentation and electrical equipment requiring seismic qualification.

(1) Foxboro Process Control Equipment cabinets.
(2) Westinghouse Solid-State Protection System and cabinets.
(3) Nuclear Instrumentation System cabinets.
(4) Nuclear Instrumentation System Power Range Electronics.
(5) Safeguards Test Racks.
(6) Resistance Temperature Detectors.
(7) Power range Neutron Detectors.
(8) Reactor trip breakers.
(9) Cameron Model 764 differential pressure transmitters and Model 763A pressure transmitters.
(10) Eagle-21 Process Protection System
(11) Nuclear Instrumentation Source and Intemediate Range Electronics
(12) Combined Source and Intermediate Range Neutron Detectors
(13) Process Transmitters (not supplied by Westinghouse)

Seismic qualification testing/analysis of Items 1 through 9 is documented in References [1] through [10] and [26]. Reference [10] presents the theory and practice, as well as justification, for the use of single axis sine beat test inputs used in the seismic qualification of electrical equipment. In addition, it is noted that Westinghouse has conducted a seismic qualification "Demonstration Test Program" (reference Letter NS-CE-692, C. Eicheldinger (W), to D. B. Vassallo (NRC), 7/10/75) to confirm equipment operability during a seismic event. This program is documented in References [12] through [14] (Proprietary) and References [16] through [19] (Non-Proprietary). Seismic qualification testing of Item 10 to IEEE 344-1975 is documented in References [21], [22], [23], [31] and [32]. Reference [26] documents the Westinghouse qualification by analysis of the Nuclear Instrumentation System cabinet 2-M-13 with Gamma Metrics Source and Intermediate Range hardware installed.

The Watts Bar Nuclear Plant complies with paragraph IV, "Conclusions and Regulatory Positions" of the "Mechanical Engineering Branch Report on Seismic Audit of Westinghouse Electrical Equipment." All topical reports have been completed and are included in the reference list. The non-proprietary topical reports have been referenced as a group above. The structural capability of the NIS cabinets and power range electronics is discussed in References [14], [19], [24], and [26].

The demonstration test program, in conjunction with the justification for the use of single axis sine beat tests, presented in WCAP-8373, and the original tests, documented in References [2] through [10], meet the requirements of IEEE Standard 344-1975 "IEEE Recommended Practices for Seismic Qualification of Class 1E Equipment for Nuclear Power Generating Stations" for the seismic qualification of Westinghouse electrical equipment outside of containment. Environmental qualification for equipment inside of containment is described in Section 3.11.

The peak accelerations used in the type testing are conservative values that are checked against those derived by structural analyses of SSE loadings of the Watts Bar Nuclear Plant. For the SSE there may be permanent deformation of the equipment provided that the capability to perform its function is maintained.

Resistance temperature detectors used to sense the temperature in the main coolant loops are rigid, ruggedly built devices designed to withstand the high temperature, high pressure, and flow vibration induced acceleration forces which they are subjected to when installed in the coolant loops. The natural frequency of this device is designed to be higher than the frequencies associated with the seismic disturbance. Seismic qualification of these resistance temperature detectors is presented in Reference [9].

The nuclear instrumentation system power range neutron detector has been vibration tested in both the transverse (horizontal) direction and longitudinal (vertical) direction at acceleration levels greater than those expected during a seismic disturbance at the Watts Bar Nuclear Plant site. Detector current measurements were made during the tests and neutron sensitivity, resistance, and capacitance checks were made after the test. No significant changes were seen. There was no mechanical damage to the detector.

Typical switches and indicators which could defeat automatic operation of a required safety function have been tested to determine their ability to withstand seismic excitation without malfunction. The control boards are stiff and past experience indicates that the amplification due to the board structure is sufficiently low so that the acceleration seen by the device is considerably less than that used in testing.

All safety-related instruments of the reactor protection system and the engineered safety feature circuits are mounted on Seismic Category I supporting structures. They are designed to withstand horizontal and vertical accelerations at each floor level for the SSE. The instrument supporting structures located throughout the plant (local panels) have been standardized in design and have been seismically qualified by testing. The local panels were tested using response spectra for the highest elevation

on which any of these panels are mounted. The test criteria were in accordance with IEEE 344-1971 or IEEE 344-1975, as discussed above.

Where space requirements preclude the use of the standard local panels, a small wall-mounted panel is used. This panel is qualified, to the same criteria as the local panels, by analysis and/or test.

Seismic qualification testing of the Gamma-Metrics supplied source and intermediate range neutron detection system (Items 11 and 12 including all interconnections) is documented in Reference [25].

Seismic qualification testing of the protection system process transmitters not supplied by Westinghouse (Item 13) is documented in References [27] through [30].

3.10.2 Methods And Procedures For Qualifying Electrical Equipment And Instrumentation

For the seismic qualification methods of selected Category I electrical equipment and instrumentation, see Tables 3.10-1 and 3.10-2.

Instrumentation

The seismic type testing performed by the NSSS supplier (Westinghouse) is described in References [1] through [10], and [21]. For References [1] through [10], the test method used was the sine beat procedure described in IEEE 344-1971 and Reference [11]. In addition, as noted in Section 3.10.1, Westinghouse conducted a "Demonstration Test Program" which, when considered in conjunction with the tests presented in References [11] through [13], results in meeting the requirements of IEEE 344-1975.

Supporting Structures (Panels, Racks, Cabinets, and Boards)

The qualification of the supporting structures for Seismic Category I instruments has been accomplished by either analysis or testing. The method commonly used is testing under simulated conditions. All tests by TVA before September 1, 1974 on these supporting structures were similar. The support structure was mounted on a vibration generator in a manner that simulated the intended service mounting. The vibratory forces were applied to each of the three major perpendicular axes independently. Maximum service dead loads were simulated. Selected points were monitored to establish amplification of loads. Testing was done at the structure's resonant frequencies. The resonant frequencies were determined by an exploratory test using a sinusoidal steady-state input of low amplitude, (two continuous sweeps from 1 to 33 Hz at a rate of 1 octave per minute). The qualification test was conducted using the sine beat method at the resonant frequencies using the appropriate acceleration input as determined from the building response acceleration spectra. Also, reference Section 3.7.3.16 for additional details.

Later qualification tests typically used multi-frequency time history input motion for which the test response spectra enveloped the required response spectra in accordance with IEEE 344-1975 guidelines.

3.10.3 Methods of Qualifying TVA-Designed Supports for Electrical Equipment Instrumentation and Cables

The methods and procedures of design and analysis or testing of electrical equipment and instrumentation supports, cable trays, cable tray supports, conduit, conduit supports, and conduit banks are provided in the following sections.

3.10.3.1 Electrical Equipment and Instrumentation Assemblies

TVA-designed supports and anchorage for Category I electrical equipment assemblies ensure compatibility with the equipment seismic qualifications test or analysis as described in Section 3.7.3.16.5. Design of these supports is in accordance with Section 3.8.4.5.2.

All floor/wall mounted Category I electrical equipment assemblies such as battery racks, instrument racks, and control consoles are attached by TVA to the building structure. The attachments are made by bolting or welding to structural members. Anchorages to concrete are made by welding to embedded plates cast in the concrete with stud anchors, or by bolting to anchors set in the hardened concrete (self-drilling bolts, wedge bolts, undercut expansion anchors, or grouted anchors).

3.10.3.2 Cable Trays and Supports

3.10.3.2.1 Cable Trays

Cable trays containing Class 1E cables located in Category I structures are considered safety-related and are designed to resist gravity and SSE forces.

Cable tray acceptance criteria are derived from testing. A factor of safety of 1.25 against the tested capacity, is maintained for the vertical moment. A ductility factor of 3 is used to establish tray capacity in the transverse direction. These limits are used in an interaction equation to evaluate tray sections for the SSE loading condition. Seismic loadings are developed based on the applicable response spectra. In addition, all trays are evaluated to ensure a minimum factor of safety of 3 against test capacity for dead load only.

Figure 3.10-1 defines the orientation of the transverse and vertical moments.

Cable tray X and T fittings are evaluated for vertical loading to ensure a minimum factor of safety of 1.25 against the formation of a first hinge.

All other cable tray components are evaluated using AISI or AISC allowables (as applicable) with increase factors as allowed by Standard Review Plan Section 3.8.4. Where test data is used to establish capacities of bolted parts, a factor of safety of 1.5 is maintained against the ultimate test load for the SSE loading condition.

3.10.3.2.2 Supports

All cable tray supports located in Category I structures are designated Seismic Category I and designed to resist seismic forces applied to the weight of trays and cables. Each support in Category I structures is designed independently to support its

appropriate length of tray. Seismic load inputs are based on the methods described in Section 3.7 and the damping requirements described in Table 3.7-2.

Trays are designed to carry a load of 30 pounds per square foot (which is equivalent to 45 pounds per linear foot for an 18 inch wide tray) and an additional construction load of 30 pounds per linear foot on the top tray. Actual tray loading may be used on a case by case basis.

For load combinations and allowables applicable for cable tray supports, see Table 3.10-5.

Welding was in accordance with the American Welding Society (AWS), "Structural Welding Code," AWS D1.1 with revision 1-73 and 1-74, except later editions may be used for prequalified joint details, base materials, and qualification of welding procedures and welders. Nuclear Construction Issues Group documents NCIG-01 and NCIG-02 may be used after June 26, 1985, for weldments that were designed and fabricated to the requirements of AISC/AWS. Visual inspection of structural welds will meet the minimum requirements of NCIG-01 and NCIG-02 as specified on the design drawings or other design output. Inspectors performing visual examination to the criteria of NCIG-01 are trained in the subject criteria.

3.10.3.3 Conduit and Supports

3.10.3.3.1 Conduit

Conduit containing Class 1E cables located in Category I structures are considered safety-related and designed to resist gravity and SSE forces applied to the conduit and cable. The seismic qualification utilizes the same analysis methods as Seismic Category I subsystems described in Section 3.7.3 and limits allowable stress to 90% of the yield stress of the conduit material. The applicable damping requirements are defined in Table 3.7-2.

3.10.3.3.2 Supports

All conduit supports in Category I structures are designed to resist gravity and SSE forces applied to the conduit and cables. Supports for conduit containing Class 1E cables are designated Category I and stresses are limited to 90% of the yield stress of the material involved. Seismic load inputs are based on methods described in Section 3.7 and damping requirements are defined in Table 3.7-2. Supports for conduit containing only non-Class 1E cables are designated Category I(L) and designed and constructed to preclude a failure which could reduce the ability of Category I structures, systems, and components to perform their intended safety function.

Welding was in accordance with the American Welding Society (AWS), "Structural Welding Code," AWS D1.1 with revision 1-73 and 1-74, except later editions may be used for prequalified joint details, base materials, and qualification of welding procedures and welders. Nuclear Construction Issues Group documents NCIG-01 and NCIG-02 may be used after June 26, 1985, for weldments that were designed and fabricated to the requirements of AISC/AWS. Visual inspection of structural welds will

meet the minimum requirements of NCIG-01 and NCIG-02 as specified on the design drawings or other design output. Inspectors performing visual examination to the criteria of NCIG-01 are trained in the subject criteria.

3.10.3.4 Conduit Banks

The Category I underground electrical conduit banks, which run from the Auxiliary Building to the Diesel Generator Building and to the Intake Pumping Station, were analyzed for seismic loads by the method outlined in Section 3.7.2.1.3. The conduit banks are designed in accordance with Section 3.8.4.2.

3.10.4 Operating License Review

3.10.4.1 TVA Supplied Instrumentation and Electrical Equipment

The seismic qualification program for the Watts Bar Nuclear Plant described in Sections 3.10.1, 3.10.2, and 3.10.3 is summarized by the following listing for Class 1E equipment and by Tables 3.10-1, 3.10-2 and 3.10-3.

	Equipment	TVA Contract No.
AC Auxiliary Power System	6.9kV Switchgear	74C2-84376
	6.9kV Shutdown Logic Relay Panels	75K2-85354
	6.9kV/480V Transformer	74C2-84647
	480V Switchgear	74C2-84647
	480V Motor Control Centers	74C5-84646
	480V Distribution Panelboards for Pressurizer Heater Backup Groups	75K3-86476
	Diesel Generator	74C63-83090
	Transfer Switches	75K5-87048
125V DC Class 1E System	Transfer Switches	75K5-87048
	Battery Chargers	74C8-85251
	Vital Batteries	76K3-85763
	Vital Battery Boards	75C2-85281
120V AC Class 1E System	AC Vital Instrument Power Boards	74C4-85216

	Equipment	TVA Contract No.
	Vital Inverters	69414
Miscellaneous Class 1E Equipment	Electrical Penetrations	76K61-87064
	BOP I&C Equipment	Multiple Contract No.
	Emergency DC Lighting	75C2-85737-1

REFERENCES:

(1) Morrone, A., "Seismic Vibration Testing with Sine Beats," WCAP-7558, October, 1971.

(2) Vogeding, E. L., "Seismic Testing of Electrical and Control Equipment," WCAP-7397-L (Proprietary) and WCAP-7817 (NonProprietary), December, 1971.

(3) Vogeding, E. L., "Seismic Testing of Electrical and Control Equipment (WCID Process Control Equipment)," WCAP-7817, Supplement 1, December, 1971.

(4) Potochnik, L. M., "Seismic Testing of Electrical and Control Equipment (Low Seismic Plants)," WCAP-7817, Supplement 2, December, 1971.

(5) Vogeding, E. L., "Seismic Testing of Electric and Control Equipment (Westinghouse Solid State Protection System) (Low Seismic Plants)," WCAP-7817, Supplement 3, December, 1971.

(6) Reid, J. B., "Seismic Testing of Electrical and Control Equipment (WCID NUCANA 7300 Series) (Low Seismic Plants)," WCAP-7817, Supplement 4, November, 1972.

(7) Vogeding, E. L., "Seismic Testing of Electrical and Control Equipment (Instrument Bus Distribution Panel)," WCAP-7817, Supplement 5, March, 1974.

(8) Faust III, C. E., Tang, D. T., and Yalich, M., "Equipment Qualification Test Report Reactor Trip Switchgear," WCAP 8687, Supplement 2-E20B, Revision 1, July, 1981.

(9) Resistance Temperature Detectors - Equipment Qualification Data Packages: EQDP-ESE-6, Revision 7; EQDP-ESE-7, Revision 7; and, EQDP-ESE-66A, Revision 1 - WCAP-8587.

(10) Fischer, E. G. and Jerecki, S. J., "Qualification of Westinghouse Seismic Testing Procedure for Electrical Equipment Tested Prior to May 1974," WCAP-8373, August, 1974.

(11) Wyle Laboratory T. R. 42377-1, "Seismic Simulation Test Program on Instrument Rack."

(12) Jareck, S. J., "General Method of Developing Multifrequency Biaxial Test Inputs for Bistables," WCAP-8624 (Proprietary) September, 1975.

(13) Jareck, S. J. and Vogeding, E. L., "Multifrequency and Direction Seismic Testing of Relays," WCAP-8673 (Proprietary) December, 1975.

(14) Jareck, S. J., Coslow, B. J., Croasdaile, T. R., and Lipchak, J. B., "Seismic Operability Demonstration Testing of the Nuclear Instrumentation System Bistable Amplifier," WCAP-8830 (Proprietary) October, 1976.

(15) Deleted by Amendment 95.

(16) Miller, R. B., "Seismic Testing of Electrical and Control Equipment (low Seismic Plants)," WCAP-7817, Supplement 8 (Non-Proprietary) June, 1975.

(17) Jareck, S. J., "General Method of Developing Multifrequency Biaxial Test Inputs for Bistables," WCAP-8695 (Non-Proprietary) September 1975.

(18) Jareck, S. J. and Vogeding, E. L., "Multifrequency and Direction Seismic Testing of Relays," WCAP-8674 (Non-Proprietary) December 1975.

(19) Jareck, S. J., Coslow, B. J., Croasdaile, T. R., and Lipchak, J. B., "Seismic Operability Demonstration Testing of the Nuclear Instrumentation System Bistable Amplifier," WCAP-8831 (Non-Proprietary) October 1976.

(20) Deleted by Amendment 95.

(21) WCAP-8687, Supplement 2 - E69A, "Equipment Qualification Test Report, Eagle 21 Process Protection system" (Proprietary), May 1988.

(22) WCAP-8687, Supplement 2 - E69B, "Equipment Qualification Test Report, Eagle 21 Process Protection System Components" (Proprietary), February 1990.

(23) WCAP-8687, Supplement 2 - E69C, "Equipment Qualification Test Report, Eagle 21 Process Protection System Components" (Proprietary), February 1991.

(24) System Description, N3-92-4003, "Neutron Monitoring System".

(25) Thermo Fisher Scientific Qualification Report No. 864, Rev. 0, Class 1E Qualification of Source Range Intermediate Range and Wide Range Channels.

(26) Westinghouse Report EQ-EV-39-WBT, Seismic Evaluation of Nuclear Instrumentation System Console 2-M-13 with Gammametrics Equipment for Watts Bar Unit 2, Revision 1, March 2009.

(27) Rosemount D8400102 Rev. F, Qualification Report for Pressure Transmitter Model 1154.

(28) Rosemount D8700096 Rev. I, Qualification Report for Rosemount Model 1154 Series H Pressure Transmitter.

(29) Ametek Report No. TR-1136, Qualification Documentation Review Package for Ametek Aerospace Gulton-Statham Products Nuclear Qualified Pressure Transmitter Series Enveloping --- Gage Pressure Transmitter Series PG 3200, Differential Pressure Transmitter Series PO 3200 Differential High Pressure Transmitter Series PDH 3200, Draft Range Pressure Transmitter Series DR 3200, Remote Diaphragm Seal Differential Pressure Transmitter Series PO 3218, Remote Diaphragm Seal Differential High Pressure Transmitter Series PDH 3218.

(30) Weed report 16690-QTR, Revision 0, Qualification Test Report for Environmental and Seismic Qualification of Week Model DTN2010 Pressure Transmitters.

(31) EQLR-056A and EQLR-056B, Qualification of Eagle 21 Power Supplies

(32) EQLR-126, Qualification of Eagle 21 AC Distribution Panel Circuit Breaker (Unit 2 only)

Table 3.10-1 WBNP Instrumentation And Electrical Equipment Seismic Qualification Summary (Sheet 1 of 3)

EQUIPMENT	LOCATION BLDG/EL*	TVA CONTRACT NO.	VENDOR	SEISMIC QUALIFICATION CRITERIA	QUALIFICATION METHOD	TEST METHOD	TEST LAB
CONTROL INSTRUMENT LOOPS	MULTIPLE LOCATIONS	73C3-92784	BAILEY METER CO	IEEE 344-1971	TEST	SINGLE AXIS	ACTION ENVIRON-MENTAL TESTING CORP.
INSTRUMENTATION AND CONTROLS	MULTIPLE LOCATIONS	77K3-87352	ROBERTSHAW CONTROLS CORP	IEEE 344-1974	TEST	RANDOM FREQUENCY, MULTIAXIS	WYLE LAB
CONTROL INSTRUMENT LOOPS (Unit 2)	MULTIPLE LOCATIONS	69016/71252	FOXBORO SPEC 200	IEEE 344-1975	TEST	MULTIAXIS	NUCLEAR QUALIFICATION SERVICES
PANELS 2-L-11-A AND 2-L-11-B				IEEE 344-1975	ANALYSIS		
FABRICATION OF LOCAL PANELS AND INSTALLATION OF INSTRUMENTS	MULTIPLE LOCATIONS	73C38-92800	H. K. PORTER	IEEE 344-1974 (DRAFT REVISION TO IEEE 344-1971)	TEST	MULTIFREQUENCY, BIAXIAL	WYLE LAB
PROCESS TRANSMITTERS, PRESSURE GAUGES, PRESSURE SWITCHES, & LEVEL SWITCHES, REPLACEMENT PARTS FOR OBSOLETE EQUIPMENT	SEE NOTE 1						
STANDBY POWER SYSTEM	D-742	74C63-83090	MORRISON-KNUDSON POWER SYSTEMS DIV.				
DIESEL GENERATOR PROTECTIVE RELAY PANELS				IEEE 344-1971	TEST	BIAXIAL MULTIFREQUENCY	WYLE LAB
DIESEL GENERATOR CONTROL PANELS				IEEE 344-1971	TEST	BIAXIAL MULTIFREQUENCY	WYLE LAB

Table 3.10-1 WBNP Instrumentation And Electrical Equipment Seismic Qualification Summary (Sheet 2 of 3)

EQUIPMENT	LOCATION BLDG/EL*	TVA CONTRACT NO.	VENDOR	SEISMIC QUALIFICATION CRITERIA	QUALIFICATION METHOD	TEST METHOD	TEST LAB
DC DISTRIBUTION PANELS				IEEE 344-1971	TEST	BIAXIAL MULTIFREQUENCY	WYLE LAB
125V DIESEL BATTERIES AND BATTERY RACKS				IEEE 344-1971	TEST	BIAXIAL MULTIFREQUENCY	WYLE LAB
BATTERY CHARGERS				IEEE 344-1971	TEST	BIAXIAL MULTIFREQUENCY	WYLE LAB
STANDBY DIESEL GENERATORS				IEEE 344-1971	ANALYSIS		
EMERGENCY DC LIGHTING	A-757 1-772	75C2-85737-1	GRAYBAR ELECTRIC, INC.	IEEE 344-1971	TEST	MULTIFREQUENCY, BIAXIAL	WYLE LAB
ELECTRICAL PENETRATIONS	R-(ALL LEVELS)	76K6I-87064	CONAX CORP	IEEE 344-1971	ANALYSIS		
125V DC VITAL BATTERIES	A-757	76K3-85763	GOULD IND.	IEEE 344-1975; IEE P535, DRAFT 2 DATED NOV. 15, 1974	TEST	RANDOM, BIAXIAL, MULTIFREQUENCY	WYLE LAB
TRANSFER SWITCHES	A-772 A-757	75K5-87048	B-K ELECT PROD	IEEE 344-1971	TEST	SINGLE AXIS, SINE BEAT	AERO NAU LAB
125V DC VITAL CHARGERS	A-772	74C8-85251	PWR. CONV. PROD.	IEEE 344-1971, DRAFT 5	TEST	MULTIFREQUENCY, RANDOM, BIAXIAL	WYLE LAB
125V DC BATTERY BOARDS	A-757	75C2-85281	WESTINGHOUSE	IEEE 344-1971, ENCLOSURE NO. 5	TEST	SINE BEAT, BIAXIAL, FOUR POSITIONS	WESTINGHOUSE

Table 3.10-1 WBNP Instrumentation And Electrical Equipment Seismic Qualification Summary (Sheet 3 of 3)

EQUIPMENT	LOCATION BLDG/EL*	TVA CONTRACT NO.	VENDOR	SEISMIC QUALIFICATION CRITERIA	QUALIFICATION METHOD	TEST METHOD	TEST LAB
120V AC VITAL INVERTERS	A-772	69414	AMETEK SCI	IEEE 344-1971, DRAFT 5	TEST	MULTIFREQUENCY, RANDOM, BIAXIAL	WYLE LAB
120 AC VITAL INSTR. BOARDS	A-757	74C4-85216	WESTINGHOUSE	IEEE 344-1971, ENCLOSURE NO. 5	TEST	SINE BEAT, BIAXIAL, FOUR POSITIONS	WESTINGHOUSE
6.9KV SD BD LOGIC PANELS	A-757	75K2-85354	H. K. PORTER	IEEE 344, R3 (FEB. 15, 1974)	TEST	MULTIFREQUENCY, RANDOM, BIAXIAL	WYLE LAB
6.9KV SD BDS	A-757	74C2-84376	G. E.	IEEE 344, DRAFT REV. 5	TEST	MULTIFREQUENCY, RANDOM, BIAXIAL	WYLE LAB
480V SD BDS, TRANSFORMERS AND PRESS. HTR. TRANSFORMERS	A-772 A-782	74C2-84647	WESTINGHOUSE	IEEE 344, R3, AND ENCLOSURE NO. 5	TEST	MULTIFREQUENCY, RANDOM, BIAXIAL	WYLE LAB
480 DISTRIBUTION PANELBOARDS FOR PRESSURIZER HEATER BACKUP GROUP	A-782	75K3-86476	EL TEX	IEEE 344, DRAFT R5	TEST	MULTIFREQUENCY, RANDOM, BIAXIAL	WYLE LAB
480V MOTOR CONTROL CENTERS	A-772 A-757	74C5-84646	ITE	IEEE 344, DRAFT 3 (FEB. 15, 1974)	TEST	SINE BEAT	WYLE LAB

*R-REACTOR BLDG.

A-AUXILIARY BLDG

C-CONTROL BLDG.

D-DIESEL GEN. BLDG.

NOTE 1 - These instruments were purchased under various TVA contract and were tested or qualified to IEEE 344-1971 or 344-1975 criteria.

Table 3.10-2 Qualification Of Instrumentation And Control Equipment (Sheet 1 of 3)

Equipment	Qualification Method*	Standard to Which Qualified*	Organization Performance Testing/Analysis and Date of Completion
Reactor Trip and Bypass Breakers	1 & 3 testing		Westinghouse
Solid State Protection System	1 & 2 testing		Westinghouse
Eagle-21 Process Protection System	3 testing		Westinghouse
Nuclear Instrument System			
Unit 1 Cabinets	1, 2 & 6 testing and analysis		TVA & Westinghouse
Unit 2 Cabinets	1, 2 & 8 testing and analysis		Westinghouse
Power Range Electronics	1 & 2 testing		Westinghouse
Source & Intermediate Range Electronics	7 analysis (Unit 2)		Thermo Fisher Scientific
Neutron Detectors			
Power Range	1 testing		Westinghouse
Source/Intermediate Range	7 analysis (Unit 2)		Themo Fisher Scientific
Process Transmitters			
Unit 1	1 & 2 testing		Westinghouse
Unit 2	1, 2 & 11-17 testing		Manufacturer & Westinghouse
Containment Pressure Transmitters	3 testing		
Solid State Protection system Output Relays	1 & 2 testing		Westinghouse
Engineered Safeguards Test Cabinets	1 testing		Westinghouse
Control Room Panels	1 & 4 testing and analysis		Westinghouse
Safety System Status Monitoring System			

Table 3.10-2 Qualification Of Instrumentation And Control Equipment (Sheet 2 of 3)

Equipment	Qualification Method*	Standard to Which Qualified*	Organization Performance Testing/Analysis and Date of Completion
Post Accident Monitoring System	testing		
Unit 1 ICCM 86	1 & 2 testing		Westinghouse
Unit 2 Common Q	10 testing		Westinghouse

*Qualification Method	Description of Method
1	Sine beat; single axis (Ref. WCAP-7558, WCAP-7817[3], [4], [5], [6], [7] and its supplements, and WCAP-8373, as per IEEE-344-1971).
2	Demonstration Test Program biaxial test inputs with multifrequency forcing functions, as per requirements of IEEE-344-1975.
3	IEEE-344-1975
4	Analysis
5	Test documented in WCAP-8687, Supplement 2-E15A (Proprietary) and WCAP-8587, Supplement 2-E15A (Non-Proprietary)
6	See System Description, N3-92-4003, “Neutron Monitoring System” for a listing of the reference calculations.
7	Thermo Fisher Scientific Qualification Report No. 864, Rev. 0, Class 1E Qualification of Source Range, Intermediate Range and Wide Range Channels.
8	Westinghouse Report EQ-EV-39-WBT Revision 1, Seismic Evaluation of Nuclear Instrumentation System Console 2-M-13 with Gammametrics Equipment for Watts Bar Unit 2, Revision 1, March 2009.
9	WCAP-8587, “Methodology for Qualifying Westinghouse WRD Supplied NSSS Safety-Related Electrical Equipment, “Revision 6-A (NP), Dated March 1983

Table 3.10-2 Qualification Of Instrumentation And Control Equipment (Sheet 3 of 3)

10	Ametek Report No. TR-1136, Qualification Documentation Review Package for Ametek Aerospace Gulton-Statham Products Neclear Qualified Pressure Transmitter Series Enveloping --- Gage Pressure Transmitter Series PG 3200, Differential Pressure Transmitter Series PO 3200 Differential High Pressure Transmitter Series PDH 3200, Draft Range Pressure Transmitter Series DR 3200, Remote Diaphragm Seal Differential Pressure Transmitter Series PO 3218, Remote Diaphragm Seal Differential High Pressure Transmitter Series PDH 3218.
11	Rosemount Report D2001019 Rev. B, Model 3051N Qualification Report
12	Rosemount Report 117415 Rev, H. Qualification Tests for Rosemount Pressure Transmitter Model 1152
13	Rosemount Report D8300040 Rev. E, Qualification Report for Pressure Transmitters Rosemount Model 1153 Series D
14	Rosemount Report D8400102 Rev. F, Qualification Report for Pressure Transmitter Model 1154
15	Rosemount Report D8700096 Rev. I, Qualification Report for Rosemount Model 1154 Series H Pressure Transmitter
16	Weed report 16690-QTR, Revision 0, Qualification Test Report for Environmental and Seismic Qualification of Week Model DTN2010 Pressure Transmitters.

Table 3.10-3 Watts Bar Seismic Qualifications
(Sheet 1 of 25)

Equipment:	Metalclad Switchgear
Equipment Rating:	6.9 kV, 60 Hz, 3-phase
Mounting:	The switchgear was bolted to test table to simulate in-service configuration.
Seismic Test:	The control circuits of the switchgear were energized with 125 VDC and subjected to the following tests: 1. Exploratory tests (Resonant Search)--Consisting of a low level single axis sweep from 1 Hz to 35 Hz at a rate of two octaves per minute and at a level of 0.2 g per peak. Resonant search test was performed in the front-to-front and side-to-side orientation. 2. Proof Test-Consisting of biaxial multifrequency random tests in front-to-back and side-to-side orientations. More than 5 OBE'S and one SSE were performed in each orientation.
Monitoring:	A multichannel recorder was used to monitor electrical continuity contact chatter and change of state before, during, and after tests.
Results:	The specimen's structural integrity was not compromised and circuit continuity was maintained.
Reference:	Wyle Laboratories Report No. 42868-1.

Table 3.10-3 Watts Bar Seismic Qualifications (Sheet 2 of 25)

Equipment:	6900V Shutdown Board Logic Panels.
Electrical Rating:	Not applicable.
Mounting:	The specimen was mounted with its base flush to the test table and welded to the table top, simulating the in-service configuration.
Seismic Test:	The specimen control circuits were energized (125V DC) and the specimen was subjected to the following tests: 1. Exploratory Test (Resonant Search) - Consists of low-level (0.2g horizontal and 0.1g vertical) multiaxis sine sweep from 1 Hz to 35 Hz to 1 Hz in front-to-back and side-to-side orientations to determine major equipment resonance points. 2. Proof Test (Multifrequency)-- consisting of simultaneous horizontal and vertical incoherent inputs of random motion at frequencies spaced 1/3 octave apart from 1-4 Hz in front-to-back and side-to-side orientations. Aging was obtained with a minimum of five half-level SSE tests in each orientation prior to performing the full-level SSE test.
Monitoring:	A multichannel recorder was used to monitor electrical continuity, contact chatter, and change of state before, during, and after the seismic test.
Results:	The specimen's structural integrity was not compromised. A"b" contact of the normally de-energized DC auxiliary relay controlled by the AC undervoltage relay experienced contact chatter. Based upon further analysis of the "b" contact, it was determined that the contact chatter was of such an extremely short-term duration that it will not in any way affect system operation.
Reference:	Wyle Test Report No. 43137-1.

Table 3.10-3 Watts Bar Seismic Qualifications (Sheet 3 of 25)

Equipment:	Power Transformers
Electrical Ratings:	6900 to 480-V AC, 60-Hz, 3 phase in ratings of 500*, 1000* and 2000 KVA (* qualified by analysis).
Mounting:	The 2000 KVA transformer was bolted to the test table to simulate actual in-service mounting.
Seismic Tests:	The transformer was energized to 480V AC on the secondary and subjected to the following tests: 1 Resonance Search--A low level (0.2g) biaxial, sinusoidal sweep from 0.5 Hz to 40 Hz to 0.5 Hz was performed to determine resonance. 2. Proof Testing--The transformer was subjected to a 30 second biaxial random motion input wave with sine beats added to ensure enveloping of the required response spectra by the test response spectra. Five OBE's followed by one SSE were performed in each of four orientations (45°, 135°, 225°, and 315° to the axis of the test table). After proof tests another resonance search was performed in the last orientation. 3. Analysis--The 500 and 1000 KVA transformer were compared to the 2000 KVA transformer actually tested. It was shown that the two smaller transformers have lower weights, smaller dimensions and less coolant than, but are of the same skin thickness as the 2000 KVA transformer and therefore, have lower stresses for the same seismic excitation.
Monitoring:	Data was recorded on three ink-type oscillographs. Input acceleration was anlayzed on a spectral dynamics shock spectrum analyzer
Results:	No structural damage occurred and the 2000 KVA trans-former remained fully operational during and after testing. The 500 and 1000 KVA transformers were analytically found to be capable of successfully withstanding a seismic excitation equal to that of the 2000 KVA transformer.
Reference:	Seismic Test Report No. XAL 71789, SD 3036, Westing-house Seismic Design Analysis Report No. SBR-75-7.

Table 3.10-3 Watts Bar Seismic Qualifications (Sheet 4 of 25)

Equipment:	480V metal enclosed switchgear, Westinghouse type DS.
Electrical Rating:	480V AC, 60 Hz, 3 phase.
Mounting:	The test specimen, consisting of two typical units, was bolted to the test table to simulate actual mounting.
Seismic Tests:	The test specimen was energized to 480V AC and 125V AC (control circuits) and subjected to the following tests: 1. Resonance Search--A low level (0.2g) biaxial sinusoidal sweep from 1.0 Hz to 40 Hz to 1.0 Hz was performed on the specimen in the 225° (to the test table axis) orientation. 2. Proof Test--The specimen was subjected to an input wave made up of decaying sinusoids from 1.25 Hz to 35 Hz with two sine beats added to achieve enveloping of the required response spectra by the test response spectra. A minimum of five OBE's followed by a minimum of four SSE's were performed in the 225° and 315° orientations. In the 45° and 135° orientations only SSE's were performed. A second sine sweep for resonance was performed after proof testing.
Monitoring:	Contact monitoring was performed by an event recorder and seismic monitoring by four ink-type oscillographs. Additionally, 20 accelerometers, 5 strain bolts and a strain gage were also used for monitoring.

Table 3.10-3 Watts Bar Seismic Qualifications (Sheet 5 of 25)

Results:	The specimen maintained its structural integrity and there were no failures that would jeopardize proper functioning of the equipment.
Reference:	Westinghouse Seismic Qualification Report, type DS low voltage metal enclosed switchgear, with attached Westinghouse Astronuclear Laboratory Report (XAL 71706, SD 3027). (WCAP-10448)

Table 3.10-3 Watts Bar Seismic Qualifications (Sheet 6 of 25)

Equipment:	480V Motor Control Centers--I-T-E Imperial Corporation, subsidiary of Gould, Inc., Type 5600.
Electrical Rating:	480V AC, 60 Hz, 3-phase, 22KA short circuit bracing.
Mounting:	The specimen which consisted of 3 panels was welded to the test table simulating the in-service condition.
Seismic Test:	Control circuits (120V AC) of the specimen were energized and the specimen was subjected to the following tests: 1. Exploratory Tests (Resonant Search)--Consisting of low level (approximately 0.2 g horizontal and 0.1 g vertical) biaxial sine sweep from 1 Hz to 35 Hz in front-to-back/vertical axes test and side-to-side/vertical axes test to determine major equipment resonances. Resonant frequencies at 8.75 Hz and 35 Hz were found for the front-to-back/vertical axes test and resonant frequencies of 10 Hz and 35 Hz were found for the side-to-side/vertical axes test. 2. Proof Test (Biaxial Sine Beat)--Consisting of biaxial sine beats at equipment resonances listed above. Aging was accomplished during the 8.75 and 10 Hz tests with 4 one-half level phase coherent half level tests and 4 half level incoherent tests. Full level (1.37 g input) tests were performed at each resonance for energized, deenergized, in phase, and out-of-phase conditions. 3. Main circuits (480V AC) were deenergized during tests.

Table 3.10-3 Watts Bar Seismic Qualifications (Sheet 7 of 25)

Monitoring:	A 14-channel recorder was used to monitor electrical continuity, current/voltage levels, spurious operation, and contact chatter before, during, and after the seismic tests.
Results:	It was demonstrated that the specimen possessed sufficient integrity to withstand, without compromise of structure, the prescribed seismic environment. Some contact chatter was encountered during the testing; however, full-level tests were performed without chatter after corrective action was taken by the I-T-E Technical Representative.
Reference:	I-T-E Imperial (Subsidiary of Gould, Inc.), Seismic Certification SC077 and Wyle Test Report TR-42926-1.

Table 3.10-3 Watts Bar Seismic Qualifications (Sheet 8 of 25)

Equipment:	480V Power Distribution Cabinet
Electrical Rating:	480V AC, 60 Hz, 3-phase
Mounting:	Specimen was wall-mounted with commercially available bolts, nuts, and washers to a wall-mounting fixture which was welded to the test table. Mounting simulated the in-service configuration.
Seismic Test:	The specimen was subjected to the following tests: 1. Exploratory Test (Resonant Search)--Consisting of a low level (0.2 g horizontal and vertical) biaxial sine sweep from 1-33 Hz in both front-to back and side-to-side orientation to obtain major resonance points of the equipment. 2. Proof Test (Multifrequency)--Consists of simultaneous horizontal and vertical incoherent inputs of random motion at frequencies spaced 1/3 octave apart from 1-31.6 Hz in front-to-back and side-to-side orientations. Aging was accomplished with a minimum of 5 half-level SSE tests followed by one full level SSE test performed in both orientations.
Monitoring:	A multichannel recorder was used to monitor electrical continuity, contact chatter, and change of state before, during, and after the seismic test.
Results:	The specimen's structural integrity and circuit continuity was not compromised.
Reference:	Wyle Test Report No. 43039-1.

Table 3.10-3 Watts Bar Seismic Qualifications (Sheet 9 of 25)

Equipment:	The components of the Emergency Diesel Generator.
Seismic Test:	An analysis was performed on the components listed on page 12 of this table for the seismic conditions and criteria as specified in TVA Specification WB-DC-40-31.2. 1. The natural frequencies of the engine and the generator system were determined by analysis. 2. Selected critical components 1-9 were analyzed for 3 g horizontal and 2 g vertical accelerations (above seismic criteria), whereas, components 10-21 were analyzed for 1.62 g horizontal accelerations and 1.08 vertical accelerations (as specified by seismic criteria).
Results:	The system was found to be rigid with natural frequencies above the seismic range. All the components analyzed had conservative margins of safety in all cases under the maximum combined loadings.
References:	Corporate Consulting and Development Co., Ltd. CCL Report No. A-27-74, CCL Project No. 74-1110, DDL Report No. A-5-73A, CCL Project No. 73-1024.

Table 3.10-3 Watts Bar Seismic Qualifications
(Sheet 10 of 25)

Diesel Generator Components	
1.	Air intake filter at Mounting Bracket
2.	Accessory Rack at Base
3.	Engine Tube Oil filter at Accessory Rack.
4.	Water Expansion Tank at Accessory Tack
5.	Governor (Hydraulic Actuating).
6.	Primary Oil Pump at Engine.
7.	Scavenging Oil Filter at Engine
8.	Scavenging Oil Pump at Engine
9.	Engine Lube Oil Cooler
10.	Engine at Base
11.	Generator at Base
12.	Engine at Foundation
13.	Generator at Foundation
14.	Heat Exchanger
15.	Air Turning Box
16.	Air Intake Filter at Foundation
17.	Air Tank Saddle at Bolts
18.	Air Tank at U-Bolts
19.	Critical Weld in Air Tank Saddle Mount
20.	Maximum Pull Out of Concrete Insert.
21.	.Maximum Shear in Concrete Insert

Table 3.10-3 Watts Bar Seismic Qualifications (Sheet 11 of 25)

Equipment:	Diesel Generator Control Panel, D. C. Distribution Panel, and Battery Charger.
Mounting:	As per test specifications, the equipment was mounted on the Wyle Multi-Axis Simulator.
Seismic Test:	1. A resonant search test was conducted consisting of two low level (approximately 0.2g horizontally and 0.1g vertically) multi-axis sine sweeps in each test one octave per minute. 2. Two sine beat tests in-phase and two sine beat tests out-of-phase were performed at each resonant frequency. The sine beat consisted of 15 oscillations per beat. A train of five beats with a two-second interval between beats was used at each test frequency.
Monitoring:	Three to four electrical monitoring channels were recorded on an oscillograph recorder to ascertain electrical continuity, current/voltage levels, spurious operations, contact chatter, before, during, and after the seismic excitation.
Results:	The equipment listed above withstood the prescribed simulated seismic environment without any loss of electrical functions and structural failures.
Reference:	Wyle Report No. 42879-1. Wyle Job No. 42879.

Table 3.10-3 Watts Bar Seismic Qualifications (Sheet 12 of 25)

Equipment:	The main components of the Emergency Diesel Generator analyzed are as follows: 1. Stator Frame 2. Rotor Shaft 3. Pole Doetail 4. Pole Heads 5. Bearings 6. End Bells 7. Mounting Feet 8. Hold Down Bolts
Seismic Test:	An analysis was performed on the components listed above for seismic criteria as specified by TVA Specification WB-DC-40-31-2. 1. The components listed above were analyzed for a seismic loading of 2.7 g horizontal acceleration and 1.8 g vertical acceleration acting concurrently. 2. The mechanical response of the rotor and stator in terms of deflections and stresses was evaluated from static considerations and vertical seismic loads, acting concurrently.
Results:	All the stresses calculated were within the respective material working levels as called out in the material specs.
References:	Elective Products Division, Portec, Inc., Cleveland, Ohio. Analysis (B07 891005 019)

Table 3.10-3 Watts Bar Seismic Qualifications (Sheet 13 of 25)

Equipment:	Emergency Diesel Generator Atlas Jacket Water Cooler.
Seismic Test:	An analysis was performed on the Atlas Water Jacket Cooler for seismic conditions as specified in TVA Specification WB-DC-40-31-2. 1. The analysis evaluated the base natural frequency of the structure to determine the appropriate acceleration from the response spectra. 2. For emergency, upset, and normal conditions, the analysis considered the adequacy of the anchor bolts, supports, shell at the supports, and tubes, due to a combination of seismic loads, nozzle loads, deadweight, and pressure. 3. When emergency condition stresses were less than normal condition allowables, separate upset and normal load case calculations were omitted.
Results:	All the calculated stresses at the various points on the cooler were well below the allowable stresses under all possible conditions.
Reference:	Dynatech Project No. AIM-20. Dynatech Report No. 1237.

Table 3.10-3 Watts Bar Seismic Qualifications (Sheet 14 of 25)

Equipment:	Diesel Generator Relay Boards.
Electrical Rating:	125V DC, and 120V AC, 60 Hz, 1 phase.
Mounting:	The test specimen was welded to a steel plate which in turn was welded to the seismic test machine.
Seismic Testing:	1. Resonance Search--A resonance search was conducted using an input level of 0.2 g in the frequency range of 1 to 33 Hz with a frequency sweep rate of 1 octave per minute. The resonance search was conducted with the horizontal and vertical axis simultaneously, first in phase and then with the horizontal 180° from the original phase. The resonance search was then repeated in the second horizontal and vertical axis. The two horizontal axis were identified as longitudinal and lateral. Two control and six response accelerometers were utilized during the resonance search. The output of each accelerometer was recorded on a direct readout recorder. 2. Sine Beat Test--A sine beat test composed of ten oscillations per beat was performed at each resonance frequency determined from the resonance search. Each sine beat was applied five times at each frequency, first with one horizontal and the vertical inputs in phase and then with the horizontal input 180° from the original phase. A two-second interval between each sine beat was used. The maximum peak acceleration for the horizontal axes was 1.08 g and for the vertical axes was 0.72 g. In addition to the resonance frequencies, the sine beat test was performed at each one-half octave over the frequency range of 1 to 33 Hz
Monitoring:	A 125V dc voltage source was used to energize relay circuits during testing. A source of 120V ac was applied to monitor an ac voltmeter on the front panel of the specimen. Two chatter/transfer detectors were utilized to monitor a total of 14 channels of relay contacts during testing. The chatter/transfer detectors were set for a time duration of 1.0 millisecond or greater. During testing all monitored circuits were tested in the transfer, or open, mode. In the event of a momentary closure of a duration of 1.0 millisecond or greater, a red indicator light for that particular circuit would illuminate and remain illuminated until a reset button was pushed to reset the circuit.
Results:	Visual examination of the test specimen after each test revealed no structural damage due to the seismic tests. Of the 14 channels monitored during testing, only one circuit (Westinghouse type CM relay) indicated chatter. TVA circuits show that this relay will only be used during testing phases of the diesel generator system; therefore, it cannot prevent operation of the diesel generators during or after a seismic event because of contact chatter.
Reference:	Wyle Laboratories Report No. 54064.

Table 3.10-3 Watts Bar Seismic Qualifications (Sheet 15 of 25)

Equipment:	Emergency Generator Starting and Control System including: **Test Series 1** 1 Battery (six cells), C & D 3DCU-9 with Rack PSD-007012 1 Battery Charger, C & D ARR130HK-50 1 Fuel Oil Pump, Viking GG195D 1 Soakback Oil Pump, EMD 8274507 1 Contactor/Relay System consisting of: 1 Square D Temperature Switch, Class 9025, Type BGW397 1 Fenwall Temperature Switch, No. 20800 1 Barksdale Pressure Switch, E1HM90V 1 Overspeed Trip Limit Switch, EMD 8246095 1 Crankcase Pressure Switch, EMD 8370362 2 Square D Relays, Class 8501, Type KP Test Series 2 1 Engine Control Panel, PSD-A990F02501 1 Anode Transformer, GE-278G121AA Test Series 3 1 Switchgear Exciter Assembly, PSD-A990F11000
Mounting:	As per test specifications, the equipment was mounted on the Wyle Multi-Axis Simulator.
Seismic Test:	1. A resonant search consisting of a low level single axis sine sweep from 1 Hz to 33 Hz was performed to establish natural frequencies. The input acceleration level for all pieces of equipment was 0.2 g in the vertical direction and 0.4 g in the horizontal direction (when specified as needed).

Table 3.10-3 Watts Bar Seismic Qualifications (Sheet 16 of 25)

	2. Sine beat tests were performed at the natural frequencies detected in the resonant search test. The sine beat tests were performed as a train of beats with the number of beats per train depending upon the resonant frequency of each piece of equipment. The vertical and horizontal accelerations in the sine beat test were varied according to the piece of equipment being tested.
Monitoring:	All specimens shall be operating during full level testing, and specified functions will be monitored and recorded. Electrical powering of 480V AC, 3 phase will be furnished for operation of the switchgear, battery charger, soakback pump and the anode transformer. For operation of the Fuel Oil Pump, 125 VDC will be furnished. The battery discharge rate (10 amps), the charger output rate, the anode transformer secondary voltage and the discharge pressure of both pumps will be recorded on an oscillograph recorder. Continuity circuits on the Switchgear Assembly, the Engine Control Panel and the contactor/Relay System will be monitored for a change of state and a monitor trace recorded on an oscillograph recorder.
Results:	The equipment demonstrated the ability to withstand the prescribed seismic environment without any loss of electrical function or significant operational change. No structural degradation was noted during the tests.
Reference:	Wyle Report No. 42749-1. Wyle Job No. 42749.

Table 3.10-3 Watts Bar Seismic Qualifications (Sheet 17 of 25)

Equipment:	Transfer Switch Circuit Breaker Assemblies and Safety Switch.
Electrical Ratings:	1. 480V AC, 400A, manual circuit breaker assembly, NEMA 1 enclosure. 2. 480V AC, 600A, manual circuit breaker assembly, NEMA 1 enclosure. 3. 600V AC, 60A, 3 pole, non-fusible safety switch NEMA 1 enclosure.
Mounting:	The switches were mounted to the test fixture to simulate actual mounting, The 400A circuit breaker assembly and the safety switch were tested on the same fixture. The 600A circuit breaker assembly was tested separately.
Seismic Tests:	The switches were energized to 480V and subjected to the following tests: 1. Resonance Search--The switches were subjected to a continuous sinusoidal search from 1 to 35 Hz in each of three mutually perpendicular axes. The frequency was adjusted in discrete 1 Hz steps with vibration maintained for at least 20 seconds in each step. Peak acceleration varied from 0.1 g to 0.31 g above 5 Hz and 0.01 g to 0.26 g from 1 Hz to 5 Hz.

Table 3.10-3 Watts Bar Seismic Qualifications (Sheet 18 of 25)

	2. Proof Testing--The switches were subjected to a 30 second 0.5 SSE of 0.76 g followed by a 30 second SSE of 1.51 g's at each half octave over the range from 1 Hz to 35 Hz where no resonant frequencies were present. Where resonance was present, a 0.5 SSE (0.76 g) followed by a SSE (1.51 g's) were performed at those resonant frequencies. Testing was conducted in the front-to-back, side-to-side and vertical axes.
Monitoring:	The switches were monitored for proper operation during the testing.
Results:	No external physical damage or malfunction was noted as a result of these tests.
Reference:	Aero Nov Laboratories, Inc., Test Report No. 5-6156, dated October 31, 1975.

Table 3.10-3 Watts Bar Seismic Qualifications (Sheet 19 of 25)

Equipment:	125V-dc Battery Charger.
Electrical Rating:	ac input-480V, 60Hz, 3. dc output--125V, 100 Amperes.
Mounting:	The battery charger channel sill was welded to the Wyle simulator table in a manner duplicating the expected in-service configuration at WBNP. The control accelerometers were recorded on tape oscillograph recorders. The resulting table motion was analyzed by a spectrum analyzer at a damping of two percent (2%) and plotted at one-third octave frequency intervals over the frequency range of interest. Five, one-half-level RRS tests followed by a full-level RRS test were performed in each orientation with the specimen energized and operating in its normal charging mode. Full-level RRS tests were also performed in the front-to-back/vertical orientation during which the specimen's ac and dc circuit breakers were tripped using a low voltage ac current source.
Monitoring:	A multichannel recorder and three accelerometer devices were used to monitor the test results. Each accelerometer device consisted of two sensors, one oriented for the vertical axis and the other for the horizontal axis, the horizontal axis accelerometers were realigned for the direction of motion after the charger was rotated 90 degrees on the horizontal plane. Three channels of the multichannel recorder were used to monitor (1) input voltage, (2) state of a parallel circuit consisting of the NO alarm contacts, and (3) output voltage.
Results:	The oscillograph traces revealed no alarm contact chatter or breaker misoperation. No apparent physical damage was noticed in the visual checks. The charger performed satisfactorily before, during, and after the tests. The two DC meters mounted on the front of the charger cabinet would "peg" during the full SSE but each time they would return pretest readings with no recalibration necessary.
Reference:	Wyle Laborator's Seismic Test Report No. 42959-1.

Table 3.10-3 Watts Bar Seismic Qualifications (Sheet 20 of 25)

Equipment:	125-Volt Battery (Cell type NCX-2100).
Electrical Rating:	Two-hour rate--696 amperes to minimum battery terminal voltage of 105 volts at 60 F initial electrolyte temperature.
Mounting:	Test rack containing the batteries was welded to the test table.
Seismic Test:	Battery (3 cells) was energized to an approximate 20-ampere restive load and subjected to the following tests; 1. Exploratory test (resonant search) consisting of a low level (approximately 0.2 g horizontally and vertically) sine sweep was performed to determine the specimen resonance frequencies in each of the three orthogonal axes. The sweep rate was 1 octave per minute over the frequency range of 1 Hz to 35 Hz. 2. Proof test (multifrequency) consisting of 30-second duration simultaneous horizontal and vertical inputs of random motion consisting of frequency bandwidths spaced one-third octave apart over the frequency range of 1 Hz to 35 Hz. The amplitude of each one-third octave bandwidth was independently adjusted in each axes until the TRS enveloped the RRs.
Monitoring:	The output voltage of the battery was monitored on an oscillograph recorder during the seismic excitation. The following parameter was monitored: Output voltage +4 Percent.
Results:	The battery performed satisfactorily and all parameters monitored were within their prescribed tolerances before, during, and after the test.
References:	Wyle Laboratories Test Report No. 43479-1.
Equipment:	Battery Rack.
Seismic Test:	The battery rack was qualified by analysis as described below: 1. Natural Frequency--The calculations for natural frequency were based upon a static analysis where all the component parts were analyzed for deflection. The sum of the deflections was then used to calculate the natural frequency of the rack. 2. After determination of the natural frequency of the rack, a stress analysis was again performed on each individual component part. The absolute combined stress was then calculated by peak value analysis. 3. Data was provided with the analysis to show that all the critical acceleration response spectra was enveloped in this test.
Results:	The data showed that the rack will meet the requirements as laid out by TVA specifications and IEEE 344-1971 and will perform adequately during and after a seismic event.
Reference:	Gould, Inc., Industrial Battery Division, 60 NCX-2550 and SO 7-074526-806. WYLE Report NO. 43479-1

Table 3.10-3 Watts Bar Seismic Qualifications (Sheet 21 of 25)

Equipment:	125V DC Vital Battery Boards.
Electrical Rating:	125V Dc, 20,000 amperes short-circuit.
Mounting:	The equipment was bolted to the vibration generator in a manner that simulated the intended service mounting including bolt size and configuration.
Seismic Tests;	1. A resonant search test in test direction No. 1 using a sinusoidal input level of approximately 0.2 g from 1 to 33 Hz, and at a sweep rate of one octave per minute. 2. A sine beat test in test direction No. 1 with maximum peak acceleration corresponding to the SSE. The beat test was conducted at each natural frequency. Before each SSE beat test, five 1/2 SSE beat tests were applied. 3. Steps 1 and 2 repeated for 3 more directions.
Monitoring:	1. Six accelerometers were mounted on the test table and throughout the boards to monitor input and output accelerations. The output was recorded on graphs made from oscillographs. 2. Ten circuit breakers carrying 90 percent of rated current were monitored for contact opening. 3. Alarm reset light was energized during all tests and was visually monitored. 4. Undervoltage relay was energized and the normally closed contact was monitored during all tests. 5. Each fuse checked for continuity after testing.
Results:	The testing proved the integrity of the board/component system since no failures developed.
Reference:	Westinghouse Seismic Test Procedure No. CO-33697. PEI-TR-852001-12

Table 3.10-3 Watts Bar Seismic Qualifications (Sheet 22 of 25)

Equipment:	120V AC Vital Instrument Power Boards.
Electrical Rating:	120V AC, 60 Hz and 5,000 amperes short-circuit.
Mounting:	The equipment was bolted to the vibration generator in a manner that simulated the intended service mounting including bolt size and configuration.
Seismic Tests:	1. A resonant search test in test direction No. 1 using a sinusoidal input level of approximately 0.2 g from 1 to 33 Hz, and at a sweep of 1 octave per minute. 2. A sine beat test in test direction No. 1 with maximum peak acceleration corresponding to the SSE. The beat test was conducted at each natural frequency. Before each SSE beat test, five 1/2 SSE beat tests were applied. 3. Steps 1 and 2 repeated for 3 more directions.
Monitoring:	1. Six accelerometers were mounted on the test table and throughout the boards to monitor input and output accelerations. The output was recorded on graphs made from oscillographs. 2. Ten circuit breakers carrying 90% of rated current were monitored for contact opening. 3. Lights were energized during all tests and were visually monitored. 4. Undervoltage relay was energized and the normally closed contact was monitored during all tests. 5. Fuses checked for continuity after testing.
Results:	The testing proved the integrity of the board/component since no failures developed.
Reference:	Westinghouse Seismic Test Procedure No. CO-33419.

Table 3.10-3 Watts Bar Seismic Qualifications
(Sheet 23 of 25)

Equipment:	120V AC, 60 Hz Vital Instrument Static Inverter.
Electrical Rating:	AC input--480V, 60 Hz, 3 phase, DC input--125V. AC out--120V, 60 Hz, Single phase. KVA out--20kVa.
Mounting:	The inverter channel sills were welded to the shake table in the exact manner they would be installed on steel floor plates at Watts Bar.

Table 3.10-3 Watts Bar Seismic Qualifications (Sheet 24 of 25)

Seismic Test:	The inverter was energized to 480V, 3 phase and subjected to the following tests: 1. Exploratory Search--A low level (approximately 0.2 g horizontally and vertically) performed on each test configuration from 1 Hz to 33 Hz to establish major resonances. The sweep rate was one octave per minute. 2. Multifrequency Tests--The specimen was subjected to simultaneous horizontal and vertical inputs of random motion consisting of frequencies spaced 1/3 octave apart over the range of 1 Hz to 40 Hz. The amplitude of each 1/3 octave frequency was independently adjusted in each axis until the test response spectra enveloped the required response spectra. The resulting test table motion was analyzed at one percent damping by a spectrum analyzer and plotted at one-third octave intervals over the frequency range of interest. The duration of the tests was 30 seconds. The horizontal and vertical input accelerations levels were phase incoherent. Five 1/2-level SSE's and one SSE were performed on the invertor.
Monitoring:	The equipment used to monitor the test included a visual counter for output frequency; a 3-channel recorder to monitor (1) input voltage, (2) state of a parallel circuit of 12 NO alarm relay contacts, and (3) output voltage: and 5 accelerometers. Each accelerometer device consisted of two sensors, one oriented for vertical axes, and the other for horizontal axes.
Results:	The inverter withstood the seismic test satisfactorily without any failures.
Reference:	Wyle Laboratories Seismic Test Report No.51133-1.

Table 3.10-3 Watts Bar Seismic Qualifications (Sheet 25 of 25)

Equipment:	Electrical penetrations[1] (all types and voltages used at Watts Bar).
Seismic Test:	Seismic qualification was done by analysis. The seismic analysis done on the penetrations consider the seismic loads imposed for both a safe shutdown earthquake and a 1/2 safe shutdown earthquake in accordance with paragraph NA-3250 of the ASME Boiler and Pressure Vessel Code, Section 111, Nuclear Power Plant Components.[2] 1. The analysis calculated the natural frequencies during a seismic event using standard formulas for stress and strain by the R. Roark or Rayleigh's methods. 2. Maximum stresses for the normal and seismic load conditions were calculated. Seismic loads were considered to act in the vertical direction and in two horizontal directions.
Results:	The analysis indicated that the penetrations were able to withstand all seismic stresses from a one and a one-half safe shutdown earthquake without any loss of function.
Reference:	1. Conax Report IPS-212, Rev. A and addendum to IPS-212, Rev.A. IPS-209, IPS-752, IPS-1348 2. TVA Design Specification WBNP-DS-1805-2697-00.

Table 3.10-4 Deleted by Amendment 95

Table 3.10-5 Allowable Stresses For Cable Tray Supports

Load Case	Allowable Stress	Load Combination[2]
Case I	AISC Allowable	D + L
Case IA	AISC Allowable	D + E
Case IB	1.5 x AISC Allowable[1]	D + E + T_o
Case II	1.5 x AISC Allowable[1]	D + E'
Case IIA	1.5 x AISC Allowable[1]	D + E' + T_o
Case III	1.5 x AISC Allowable[1]	D + E' + P_a + T_a

1. Allowable stresses are limited not to exceed 0.9 F_y, except for shear, which is limited not to exceed 0.52F_y, and buckling, which is limited not to exceed 0.9 F_{CR}.

2. Key:
   D = Deadweight
   L = Live loads
   E = Operating Basis Earthquake (OBE) loads
   E' = Safe Shutdown Earthquake (SSE) loads
   T_o = Thermal effects and loads during normal operating or shutdown conditions based on the most critical transient or steady-state condition.
   T_a = Thermal effects and loads during conditions generated by the design basis accident (DBA) transient condition and including T_o.
   P_a = Pressure load effects from a DBA, such as steel containment vessel (SCV) dynamic movements and cavity pressurization.

THIS PAGE INTENTIONALLY BLANK

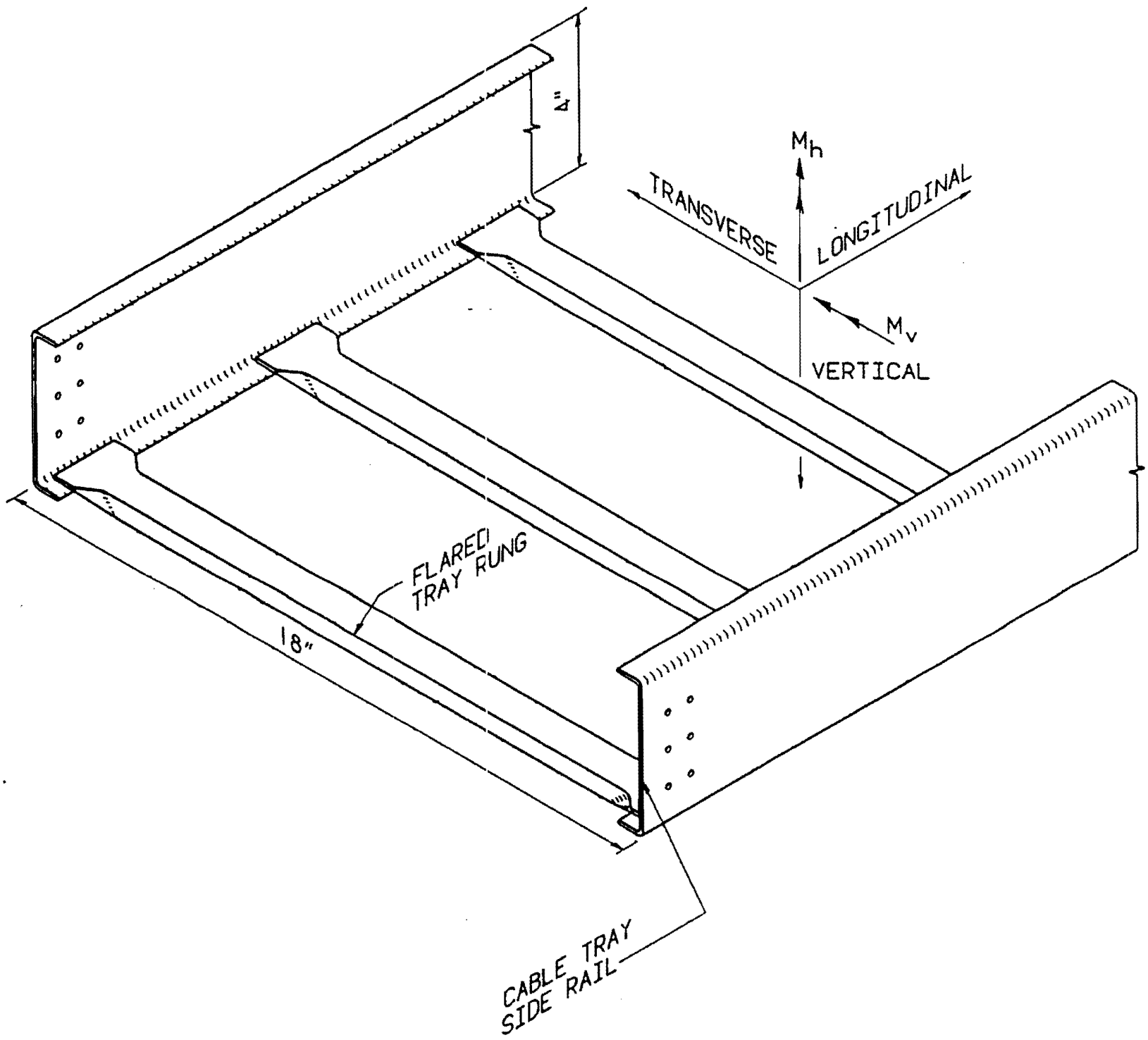

M_h IS THE BENDING MOMENT DUE TO LOADS IN THE TRANSVERSE DIRECTION.

M_v IS THE BENDING MOMENT DUE TO LOADS IN THE VERTICAL DIRECTION (OUT OF THE PLANE OF THE TRAY).

ORIENTATION OF CABLE TRAY AXES

FIGURE 3.10-1

AMENDMENT 68

Figure 3.10-1 Orientation of Cable Tray Axes

THIS PAGE INTENTIONALLY BLANK

3.11 ENVIRONMENTAL DESIGN OF MECHANICAL AND ELECTRICAL EQUIPMENT

The method of assuring that mechanical and electrical components of safety-related equipment are qualified for their potential normal operational and worst-case accident environments is described in this section.

Two programs are in place to environmentally qualify safety-related electrical equipment (including cable) and active safety-related mechanical equipment to function or not fail for event mitigation. These programs involve:

(1) Safety-related electrical equipment within the scope of 10CFR50.49.

(2) Active, safety-related mechanical equipment located in a harsh environment.

Equipment within the scope of 10 CFR 50.49 excludes that equipment located in mild or essentially mild environments. A mild environment is defined as a room or building zone where (1) the temperature, pressure, or relative humidity resulting from the direct effects of a design basis event (DBE) (e.g., temperature rise due to steam release) are no more severe than those which would occur during an abnormal plant operational condition, (2) the temperature does not exceed 130°F due to the indirect effects of a DBE (e.g., increased heat loads from electrical equipment), (3) the event radiation dose is less than or equal to 1×10^4 rads, and (4) the total event plus the 40 year TID (total integrated dose) is less than or equal to 5×10^4 rad[2].

The Mechanical Equipment Qualification (MEQ) program assures that active, safety-related mechanical equipment located in harsh environments will adequately perform the required design safety functions under all normal, abnormal, accident and post-accident environmental conditions in accordance with 10 CFR Part 50, Appendix A, General Design Criterion 4 (GDC-4).

3.11.1 Equipment Identification and Environmental Conditions

3.11.1.1 Identification of Safety Systems and Justification

Systems whose functioning is required to mitigate a loss-of-coolant accident (LOCA) or high-energy line break (HELB) for Watts Bar Nuclear Plant harsh environment areas are listed in Table 3.11-1. These systems were determined by identifying the systems upon which the safety analyses in the Final Safety Analysis Report and other referenced documents are dependent. Further, any systems which are necessary to support systems so identified were included in this table.

3.11.1.2 Identification of Equipment in Harsh Environments

The identification of the harsh environment is provided in Section 3.11.2. With the harsh environments defined, a survey of the safety-related electrical and active safety-related mechanical equipment in the affected areas was conducted. This survey was conducted using electrical instrument tabulations, mechanical piping drawings, mechanical heating and ventilation drawings, instrumentation and control drawings, electrical equipment drawings, and conduit and grounding drawings to identify the

required components. The electrical components are identified in the Category and Operating Times Calculations. These calculations establish the 10 CFR 50.49 operating category and times for these components. 10 CFR 50.49 Category A or B electrical components located in a harsh environment are qualified in environmental qualification packages, which are referred to as the Environmental Qualification (EQ) Binders. These are a comprehensive set of documentation packages that demonstrate compliance with 10 CFR 50.49. In some instances Category A or B equipment may be contained in "Essentially Mild" (EM) calculations. EM calculations evaluate the 1E equipment located in plant harsh environments for the specific DBE(s). This evaluation concludes that for the specific DBE(s) for which the equipment must function, the environmental conditions (including normal plus accident dose) do not impose a significant environmental stress on the device.

Mechanical components are identified in the Mechanical Equipment List. This list identifies the active safety-related equipment which is required to perform a mechanical motion during the course of accomplishing a system safety function. This calculation identifies mechanical equipment in the portions of safety system flow paths which are required to mitigate 10 CFR 50.49 accidents. This equipment includes, but is not limited to valves, pumps, dampers, and fans.

Verification of qualification levels for equipment within the scope of 10 CFR 50.49 has been accomplished by a field walkdown of the installed components to provide traceability between the qualification documents and the in-situ equipment. This field verification walkdown is documented in the EQ binders.

The active safety-related mechanical equipment located within harsh environmental areas in the plant was identified by use of design data and confirmed by field verification walkdowns.

3.11.2 Environmental Conditions

3.11.2.1 Harsh Environment

Environmental conditions have been established for all harsh environment areas which contain safety-related electrical and active mechanical equipment exposed to a harsh environment resulting from a design basis event. Temperature, relative humidity, pressure, radiation dose, area type, chemical spray, and flooding were the parameters considered. (Only temperature and radiation were considered for mechanical equipment. The other parameters have no significant detrimental effect on mechanical equipment.) Values were based upon the following operational conditions:

(1) Normal operating conditions - The environmental service conditions which the plant environmental control systems are designed to maintain on a normal design day.

(2) Abnormal operating conditions - The environmental service conditions which result from outside temperature excursions, temporary greater than design heat loads, or degraded environmental control system operations. This condition can exist for up to 12 hours per excursion for non-reactor building

spaces and will occur less than 1% of the plant life, unless alternate times and %0+ plant life conditions are specifically approved in Reference [4] and its associated environmental data drawings.

(3) LOCA or HELB conditions resulting from small, intermediate, or large main steam line breaks inside containment.

(4) High Energy Line Break conditions outside primary containment resulting from ruptures and critical cracks in various high energy lines throughout the Auxiliary Building and steam valve vaults.

(5) Inadvertent containment spray initiation conditions resulting from accidental operation of the containment spray system.

(6) Fuel handling accident.

The service conditions, resulting from the operational conditions listed above, are presented in Reference [4] and its associated TVA environmental data drawings. Temperature, pressure, and relative humidity vs. time curves are also provided on the drawings to clearly define the effects of various worst case HELB combinations on the area. These drawings include the environmental conditions for mild as well as harsh environmental areas.

For the purpose of 10 CFR 50.49, only design basis events 3, 4, and 6, above, are considered design basis accidents. Tornados, floods, or other natural phenomenon, including seismic, are expressly excluded from the scope of 10 CFR 50.49. Refer to Section 3.10 for Seismic Qualification.

3.11.2.2 Mild Environment

Mild environment qualification is applied to Class 1E electrical equipment only. Watts Bar satisfies the intent of NRC Generic Letter 82-09 by utilization of a preventive maintenance, surveillance, and testing program, as discussed in that generic letter.

For Class 1E equipment located in a mild environment and procured or installed before April 20, 1982 (date of issuance of NRC Generic letter 82-09), WBN demonstrates qualification by site preventative maintenance, testing, and surveillance programs.

For Class 1E equipment located in a mild environment and procured on or after April 20, 1982, WBN demonstrates qualification by the design or purchase specifications which identify environmental conditions and any other applicable design requirements as appropriate. These design activities are augmented by the site preventative maintenance, testing, and surveillance programs.

3.11.3 Electrical Equipment Within the Scope of 10 CFR 50.49

The process assuring that electrical equipment/cable is capable of performing its safety function is described in this section. A description of TVA's environmental

qualification program is presented in Reference [1]. This reference provides documentation on the program and initial EQ binder preparation to denote that the components are qualified. TVA has implemented a program to ensure that all components will be fully qualified in accordance with 10 CFR 50.49 at fuel load. The EQ binders are maintained as controlled documents.

Safety-related electrical devices located in a harsh environment and required to function or not fail for mitigation of a specific DBA are identified on the Watts Bar Nuclear Plant 10 CFR 50.49 List (1E electrical equipment requiring qualification under 10 CFR 50.49). The methodology for establishing the 10 CFR 50.49 List for Watts Bar Unit 1 is located in Section III.2 of Reference [1]. The operating category, operating time, and safety function for the 10 CFR 50.49 devices are established by the Category and Operating Time Calculations. Devices on the 10 CFR 50.49 List are analyzed for qualification to the requirements defined by 10 CFR 50.49 and documented in the EQ binders.

3.11.4 Qualification Tests and Analyses

Qualification tests and analyses for safety-related electrical equipment were conducted in accordance with the requirements of 10 CFR 50.49 and the guidelines of NUREG-0588 [3]. See Table 3.11-2 for compliance with NRC criteria and standards.

3.11.5 Qualification Test Results

Qualification test results are included or referenced in the EQ binder for safety-related electrical equipment in the 10CFR50.49 program.

3.11.6 Loss of Heating, Ventilating, and Air-Conditioning (HVAC)

Plant locations containing safety-related equipment that need a controlled environment to perform required accident mitigation operations are served by fully redundant environmental control systems, or operator actions to limit minimum and maximum temperatures (see Section 9.4 for details). Such redundancy and operator actions where specified assure that no loss of safety-related equipment occurs from a single failure of HVAC equipment provided for controlling the local environment for this equipment. Data describing controlled local environmental conditions during accidents are valid for situations in which a loss of one train of HVAC is postulated.

3.11.7 Estimated Chemical and Radiation Environment

3.11.7.1 Chemical Spray

The worst case environment (normal or post-accident) chemical composition of the containment spray was based on the following sources and assumptions:

(1) Ice Condenser

(2) Cold Leg Injection Accumulators (4 tanks)

(3) Refueling Water Storage Tank

(4) Reactor Coolant System

The following assumptions were used in this analysis:

(1) Calculations based on maximum pipe/tank volumes and boron concentrations and on minimum ice mass and sodium tetraborate concentration.

(2) All soluiions including completely melted ice mix completely.

(3) Mass ratio of NaOH to boron in the ice is 1.85.

(4) Density of borated water is equal to that of water.

(5) Fission products, corrosion products, etc., will be neglected.

Results -The sources stated above yield a mixture of boric acid and sodium tetraborate with a pH greater than 7.5.[Ref. 5]

3.11.7.2 Radiation

3.11.7.2.1 Inside Containment

The 40-year integrated normal operating dose and the maximum hypothetical accident doses are shown on the TVA environmental data drawings. The radiation exposure inside containment after a design basis LOCA was calculated based on a release to the containment atmosphere of 100% of the core inventory of noble gas, 50% of the core inventory of iodine, and 1% of the core inventory of solid fission products as determined by the ORIGEN computer code.[Ref. 6]. Removal of iodine is assumed to be due to interaction with the ice condenser only. The calculation of activity in containment after a LOCA is described in Section 15.5. Maximum gamma doses were calculated in the upper compartment, lower compartment, and ice condenser using a point-kernel-with-buildup computer code. Doses were integrated to determine equipment exposure for a 100-day period after the accident. Beta doses were calculated only for surfaces using the semi-infinite cloud equation in Regulatory Guide 1.4.

The calculation of radiation conditions inside containment complies with Paragraph 1.4 of NUREG-0588 except as noted below:

(1) Paragraph 1.4(3) -The initial distribution of activity was assumed uniform throughout the containment even though the containment is broken up into upper compartment, lower compartment, and ice condenser. Air return deck fans are provided to aid mixing between these compartments

(2) Paragraph 1.4(5) -Natural deposition was not considered. Applicable deposition rates are unknown and actions of containment spray in the upper compartment, and stearn condensation in the lower compartment can be expected to wash the deposited activity into the sump.

Unit 1 Only
For tritium production cores, the radiation exposure inside containment after a design basis LOCA was calculatd based on a release to the containment atmosphere of 100% of the core inventory of the noble gases, 50% of the core inventory of iodine, 1% of the core inventory of solid fission products and 100% of tritium as determined by the ORIGEN 2.1 computer code.[Ref. 7] Following the same methodology as previously utilized, the resulting doses were determined to be less than those resulting from the previous determination.

3.11.7.2.2 Radiation - Auxiliary Building Spaces

The normal operating radiation environment in the Auxiliary Building is shown on the TVA Environmental data drawing. The radiation exposure in the general spaces of the Auxiliary Building after a design basis LOCA is due to (1) containment sump fluid being circulated in the RHR, CS, and SI systems, (2) airborne activity in the Auxiliary Building, and (3) shine from activity in the containment. The source terms used for this accident are those determined by the ORIGEN computer code. Flow diagrams and equipment layouts were reviewed to determine the flow paths which would be used after an accident and to determine the volume and physical locations of contaminated fluids in the Auxiliary Building. The layout of the shield walls and equipment within the rooms were conservatively modeled. Source terms were calculated at various times after an accident. Dose rates were then calculated at several positions in the Auxiliary Building with respect to the contained sources and at various times after an accident. The locations where dose rates were calculated were chosen to conservatively calculate the dose rates in corridors, outside equipment cubicles, in adjacent rooms, and within the equipment cubicles. These dose rates were then integrated to determine equipment exposure for a 100-day period after the accident. Airborne activity in the Auxiliary Building is due to gaseous leakage from the containment which is processed and exhausted through HEPA and charcoal filters in the Auxiliary Building gas treatment system (ABGTS). The dose rates through the Reactor Shield Building from activity released into the containment atmosphere were also calculated.

Radiation exposure due to a design basis FHA is due to airborne activity and shine from the affected spent fuel bundle and affects the refueling floor and the ABGTS room. Dose rates were calculated at a single position on the refueling floor and at

several locations from the ABGTS filters. These dose rates were then integrated to determine equipment exposure for a 100-day period after the FHA.

The calculation of radiation conditions outside containment in the Auxiliary Building complies with Paragraph 1.4 of NUREG-0588.

REFERENCES

(1) September 30, 1986, Letter from R. Gridley to B. Youngblood, "Environmental Qualification of Electrical Equipment Important to Safety for Nuclear Power Plants ~'Summary Status Report -Watts Bar Nuclear Plant - Unit 1".

(2) Watts Bar Design Criteria, WB-DC-40-54, "Environmental Qualification to 10 CFR 50.49," Revision 2.

(3) NUREG 0588, Interim Staff Report on Environmental Qualification of Safety-Related Electrical Equipment, Revision 1, July 1, 1981.

(4) Watts Bar Design Criteria, WB-DC-40-42, Revision 2, "Environmental Design" .

(5) WCAP-15699, “Tennessee Valley Authority Watts Bar Nuclear Plant Unit 1 Containment Integrity Analyses for Ice Weight Optimization Engineering Report,” Revision 1, dated August 1, 2001.

(6) SCALE: A Modular Code System for Performing Standardized Computer Analyses for Licensing Evaluation, Vols. I-III, NUREG/CR-0200, Revision 5 (ORNL/NUREG/CSD-2/R5), March 1997.

(7) Westinghouse Letter NDP-00-0288, dated June 27, 2000 and NDP-00-0291, dated July 14,2000. (Unit 1 Only)

Table 3.11-1 Systems (Or Portions Of Systems) Required To Mitigate Loss-Of-Coolant Accidents And/Or High Energy Line Breaks

Standby AC Power System (Includes Diesel Generators)
120V Vital AC System
Vital 125V DC Control Power System
Diesel Generator Fuel Oil System
Diesel Air Starting System
Emergency Lighting System
Auxiliary Control Air System
Nuclear Instrumentation System
Reactor Protection System

Containment Isolation Systems
Ice Condenser System
Containment Spray System
Residual Heat Removal System
Safety Injection System
Reactor Coolant System
Auxiliary Feedwater System
Containment Air Return Fan System
Essential Raw Cooling Water System
Component Cooling System
Main Steam System
Radiation Monitoring System
Chemical and Volume Control System
Emergency Gas Treatment Air Cleanup System
Auxiliary Building Gas Treatment System
Control Room Area Ventilation System
Engineered Safety Feature Coolers
Auxiliary Building Ventilation Subsystems:
- Shutdown Board Room Air Conditioning System
- Auxiliary Board Rooms Air Conditioning System
- Turbine-Driven Auxiliary Feedwater Pump Ventilation
- Shutdown Transformer Room Ventilation System

Spent Fuel Pool Cooling System
Main Feedwater System
Steam Generator Blowdown System
Feedwater Control System
Sampling System
Containment Lower Compartment Cooling System: Fan only (HELB only)
Reactor Building Purge Air Filter Trains
Diesel Generator Building Ventilation System

Table 3.11-2 Compliance With NRC Criteria And Standards

General Design Criteria 1	See Chapter 17
General Design Criteria 4	See Sections 3.5, 3.6
General Design Criteria 23	See Sections 7.1, 7.3
General Design Criteria 50	See Section 6.2
10 CFR 50, Appendix B, Criterion III	See Chapter 17
Regulatory Guide 1.30	Current activities generally conform to the requirements of N45.2.4.
Regulatory Guide 1.40	See Table 7.1-1
Regulatory Guide 1.63	See Paragraph 8.3
Regulatory Guide 1.73	See Table 7.1-1
Regulatory Guide 1.89	All 10 CFR 50.49 Equipment was qualified to IEEE 323-1971, or IEEE 323-1974
10 CFR 50.49/NUREG-0588	See References 1 and 3

THIS PAGE INTENTIONALLY BLANK